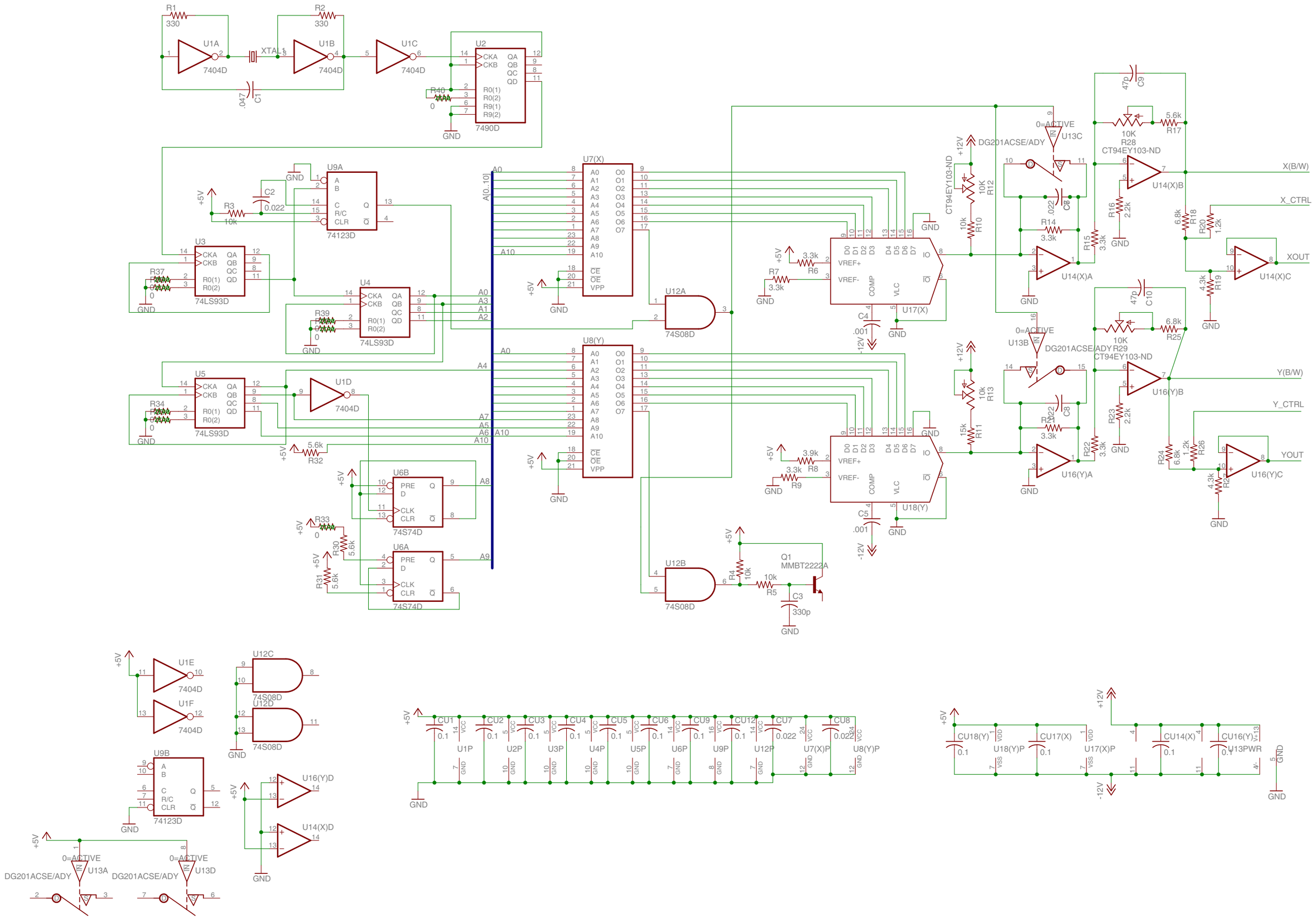

11/8/2011 12:18:21 AM f=0.90 C:\EE\EAGLE_PCB\projects\WicoXYpattern\XYPattern.sch (Sheet: 1/1)