CHAPTER

23

COMMUNICATIONS

CHAPTER 23
COMMUNICATIONS

Page	Date	COC
EFFECTIVE PAGES		
1 thru 3	Jun 15/2009	
4	BLANK	
23-HOW TO USE THE FIM		
1	Feb 10/2005	
2	Feb 10/2005	
3	Jun 10/2006	
4	Oct 10/2006	
5	Feb 10/2005	
6	Feb 10/2005	
23-FAULT CODE INDEX		
101	Oct 10/2006	
102	Oct 10/2006	
103	Oct 10/2006	
104	Oct 15/2008	
105	Oct 15/2008	
106	Oct 15/2008	
107	Oct 15/2008	
108	BLANK	
23-MAINT MSG INDEX		
R 101	Jun 15/2009	
O 102	Jun 15/2009	
103	Oct 10/2007	
104	BLANK	
23-11 TASKS		
R 201	Jun 15/2009	
R 202	Jun 15/2009	
R 203	Jun 15/2009	
R 204	Jun 15/2009	
205	Oct 15/2008	
R 206	Jun 15/2009	
R 207	Jun 15/2009	
R 208	Jun 15/2009	
R 209	Jun 15/2009	
R 210	Jun 15/2009	
R 211	Jun 15/2009	
R 212	Jun 15/2009	
R 213	Jun 15/2009	
R 214	Jun 15/2009	
R 215	Jun 15/2009	
23-11 TASKS (cont)		
R 216	Jun 15/2009	
R 217	Jun 15/2009	
R 218	Jun 15/2009	
R 219	Jun 15/2009	
R 220	Jun 15/2009	
A 221	Jun 15/2009	
A 222	Jun 15/2009	
A 223	Jun 15/2009	
A 224	Jun 15/2009	
A 225	Jun 15/2009	
A 226	Jun 15/2009	
A 227	Jun 15/2009	
A 228	BLANK	
23-12 TASKS		
201	Jun 15/2008	
202	Jun 15/2008	
203	Oct 10/2005	
204	Oct 10/2005	
205	Jun 10/2005	
206	Feb 15/2009	
207	Feb 15/2009	
208	Feb 15/2009	
209	Feb 15/2009	
210	Feb 15/2009	
211	Feb 15/2009	
212	Feb 15/2009	
213	Feb 15/2009	
R 214	Jun 15/2009	
R 215	Jun 15/2009	
R 216	Jun 15/2009	
217	Feb 15/2009	
218	Feb 15/2009	
R 219	Jun 15/2009	
R 220	Jun 15/2009	
221	Feb 15/2009	
222	Feb 15/2008	
223	Feb 15/2009	
224	Oct 10/2006	
225	Feb 15/2009	
23-12 TASKS (cont)		
226	Feb 15/2009	
227	Feb 15/2009	
228	Oct 10/2006	
23-24 TASKS		
201	Feb 15/2009	
202	Feb 15/2009	
R 203	Jun 15/2009	
R 204	Jun 15/2009	
O 205	Jun 15/2009	
O 206	Jun 15/2009	
O 207	Jun 15/2009	
O 208	Jun 15/2009	
O 209	Jun 15/2009	
O 210	Jun 15/2009	
23-27 TASKS		
201	Feb 15/2009	C
202	Feb 15/2009	C
203	Feb 15/2009	C
204	Oct 15/2008	C
205	Feb 15/2009	C
206	Feb 15/2009	C
207	Feb 15/2009	C
208	Feb 15/2009	C
O 209	Jun 15/2009	C
O 210	Jun 15/2009	C
O 211	Jun 15/2009	C
O 212	Jun 15/2009	C
O 213	Jun 15/2009	C
214	BLANK	
23-28 TASKS		
201	Feb 15/2009	
202	Feb 15/2009	
203	Feb 15/2009	
204	Feb 15/2009	
205	Feb 15/2009	
206	Feb 15/2009	
207	Feb 15/2009	
208	BLANK	

A = Added, R = Revised, D = Deleted, O = Overflow, C = Customer Originated

23-EFFECTIVE PAGES

BOEING PROPRIETARY - Copyright © Unpublished Work - See title page for details

CHAPTER 23
COMMUNICATIONS

Page	Date	COC
23-31 TASKS		
201	Jun 10/2006	
202	Feb 10/2005	
203	Oct 10/2006	
204	Jun 10/2007	
205	Jun 10/2007	
206	Jun 10/2007	
207	Jun 10/2007	
208	Jun 10/2007	
209	Jun 10/2007	
210	Feb 15/2008	
211	Jun 10/2007	
212	Jun 10/2007	
213	Jun 10/2007	
214	Jun 10/2007	
215	Jun 10/2007	
216	Jun 10/2007	
217	Jun 10/2007	
218	Jun 10/2007	
219	Feb 15/2009	
220	Jun 10/2007	
221	Jun 10/2007	
222	Jun 10/2007	
223	Jun 10/2007	
224	Jun 10/2007	
225	Jun 10/2007	
226	Feb 15/2009	
227	Feb 15/2009	
228	Feb 15/2009	
229	Feb 15/2009	
230	Jun 15/2008	
23-32 TASKS		
201	Feb 15/2009	
202	Oct 15/2008	
203	Oct 15/2008	
204	Oct 15/2008	
205	Oct 15/2008	
206	Feb 15/2009	
207	Oct 15/2008	
208	Oct 15/2008	
23-32 TASKS (cont)		
209	Oct 15/2008	
210	Oct 15/2008	
211	Oct 15/2008	
212	Feb 15/2009	
213	Feb 15/2009	
214	Feb 15/2009	
215	Feb 15/2009	
216	Feb 15/2009	
217	Feb 15/2009	
218	BLANK	
23-34 TASKS		
201	Feb 15/2009	
202	Jun 15/2008	
203	Jun 15/2008	
204	Feb 15/2009	
205	Feb 15/2009	
206	Feb 15/2009	
207	Feb 15/2009	
208	Feb 15/2009	
209	Feb 15/2009	
210	Feb 15/2009	
23-41 TASKS		
201	Oct 10/2007	
202	Feb 15/2009	
203	Feb 15/2009	
204	Feb 15/2009	
205	Feb 15/2009	
206	Feb 15/2009	
207	Feb 15/2009	
208	Feb 15/2009	
209	Feb 15/2009	
210	Feb 15/2009	
211	Oct 10/2007	
212	Oct 10/2007	
23-42 TASKS		
201	Feb 10/2005	
202	Feb 10/2005	
203	Feb 10/2005	
204	Feb 10/2005	
23-42 TASKS (cont)		
205	Jun 10/2005	
206	Jun 10/2005	
207	Jun 10/2005	
208	Jun 10/2005	
209	Jun 10/2005	
210	BLANK	
23-43 TASKS		
201	Feb 10/2005	
202	Feb 10/2005	
203	Feb 15/2009	
204	Feb 10/2005	
205	Feb 10/2005	
206	Feb 10/2005	
23-51 TASKS		
201	Feb 15/2009	
R 202	Jun 15/2009	
203	Feb 10/2007	
204	Feb 10/2007	
205	Feb 15/2009	
206	Feb 15/2009	
207	Feb 15/2009	
208	Feb 10/2007	
209	Feb 10/2007	
210	Feb 10/2007	
211	Feb 10/2007	
212	Feb 10/2007	
213	Feb 15/2009	
214	Feb 10/2007	
23-71 TASKS		
201	Feb 10/2005	
202	Oct 10/2006	
203	Feb 10/2005	
204	Feb 10/2005	
205	Feb 10/2005	
206	Feb 10/2005	
207	Jun 10/2005	
208	Feb 10/2005	
209	Feb 10/2005	
210	Feb 10/2005	

A = Added, R = Revised, D = Deleted, O = Overflow, C = Customer Originated

23-EFFECTIVE PAGES

BOEING PROPRIETARY - Copyright © Unpublished Work - See title page for details

CHAPTER 23
COMMUNICATIONS

Page	Date	COC	Page	Date	COC	Page	Date	COC
23-71 TASKS (cont)								
211	Feb 10/2005							
212	Feb 10/2005							
213	Feb 10/2005							
214	Feb 10/2005							
215	Feb 10/2005							
216	BLANK							
23-75 TASKS								
201	Feb 15/2009	C						
202	Feb 15/2009	C						
O 203	Jun 15/2009	C						
O 204	Jun 15/2009	C						
O 205	Jun 15/2009	C						
O 206	Jun 15/2009	C						
O 207	Jun 15/2009	C						
O 208	Jun 15/2009	C						
O 209	Jun 15/2009	C						
O 210	Jun 15/2009	C						
O 211	Jun 15/2009	C						
O 212	Jun 15/2009	C						
23-82 TASKS								
201	Oct 15/2008							
202	Oct 15/2008							

A = Added, R = Revised, D = Deleted, O = Overflow, C = Customer Originated

23-EFFECTIVE PAGES

BOEING PROPRIETARY - Copyright © Unpublished Work - See title page for details

YOU FIND A FAULT WITH AN AIRPLANE SYSTEM	These are the possible types of faults: 1. Observed Fault 2. Cabin Fault
USE BITE TO GET MORE INFORMATION	If you did a BITE test already, then you can go directly to the fault isolation procedure for the maintenance message. For details, see Figure 2 →
GO TO THE FAULT ISOLATION TASK IN THE FIM	Use the fault code or description to find the task in the FIM. There is a numerical list of fault codes in each chapter. There are lists of fault descriptions at the front of the FIM. For details, see Figure 3 →
FOLLOW THE STEPS OF THE FAULT ISOLATION TASK	The fault isolation task explains how to find the cause of the fault. When the task says "You corrected the fault" you know that the fault is gone. For details, see Figure 4 →

Basic Fault Isolation Process
Figure 1

BOEING PROPRIETARY - Copyright © Unpublished Work - See title page for details

Some airplane systems have built-in test equipment (BITE). IF the system finds a fault when you do a BITE test, it will give you a maintenance message.

A maintenance message can be any of these:

- a code
- a text message
- a light
- an indication.

↓

To find the fault isolation task for a maintenance message, go to the Maintenance Message Index in the chapter for the applicable system.

If you do not know which chapter is the correct one, look at the list at the front of any Maintenance Message Index. For each system or component (LRU) that has BITE, this list gives the chapter number where you can find the Index that you need.

↓

Find the maintenance message for the applicable LRU or system in the Index. Then find the task number on the same line as the maintenance message. Go to the task in the FIM and do the steps of the task (see Figure 4).

Getting Fault Information from BITE
Figure 2

BOEING PROPRIETARY - Copyright © Unpublished Work - See title page for details

IF YOU HAVE:	THEN DO THIS TO FIND THE TASK IN THE FIM:
FAULT CODE	1. The first two digits of the fault code are the FIM chapter that you need. Go to the Fault Code Index in that chapter and find the fault code. If the fault code starts with a letter, then go to the Cabin Fault Code Index at the front of the FIM. 2. Find the task number on the same line as the fault code. Go to the task in the FIM and do the steps in the task (see Figure 4).
OBSERVED FAULT DESCRIPTION	1. Go to the Observed Fault List at the front of the FIM and find the best description for the fault. 2. Find the task number on the same line as the fault description. Go to the task in the FIM and do the steps of the task (see Figure 4).
CABIN FAULT DESCRIPTION	1. Go to the Cabin Fault List at the front of the FIM and find the best description for the fault. 2. Find the task number on the same line as the fault description. Go to the task in the FIM and do the steps of the task (see Figure 4).
MAINTENANCE MESSAGE (FROM BITE)	1. Go to the Maintenance Message Index in the chapter for the LRU (the front of each Index gives you the chapter number for all LRUs). Find the maintenance message in the Index. 2. Find the task number on the same line as the maintenance message. Go to the task in the FIM and do the steps in the task (see Figure 4).

Finding the Fault Isolation Task in the FIM
Figure 3

BOEING PROPRIETARY - Copyright © Unpublished Work - See title page for details

ASSUMED CONDITIONS AT START OF TASK

- External electrical power is ON
- Hydraulic power and pneumatic power are OFF
- Engines are shut down
- No equipment in the system is deactivated

POSSIBLE CAUSES

- The list of possible causes has the most likely cause first and the least likely cause last.
- You can use the maintenance records of your airline to determine if the fault occurred before. Compare the list of possible causes to the past maintenance actions. This will help prevent repetition of the same maintenance actions.

INITIAL EVALUATION PARAGRAPH

- The primary purpose of the Initial Evaluation paragraph at the start of the task is to help you find out if you can detect the fault right now:
  - If you cannot detect the fault right now, then the task cannot isolate the fault and the Initial Evaluation paragraph will say that there was an intermittent fault.
  - If you have an intermittent fault, you must use your judgement (and follow your airline's policy) to decide which maintenance action to take. Then monitor the airplane to see if the fault happens again on subsequent flights.
- The Initial Evaluation paragraph can also help you find out which Fault Isolation Procedure to use to isolate and correct the fault.

FAULT ISOLATION STEPS

- Do the steps of the task in the specified order. The "If ... then" statements that you see will guide you along the correct path.
- When you are at the endpoint of the path, the step says "...you corrected the fault." Complete the step and exit the procedure.

Doing the Fault Isolation Task
Figure 4

BOEING PROPRIETARY - Copyright © Unpublished Work - See title page for details

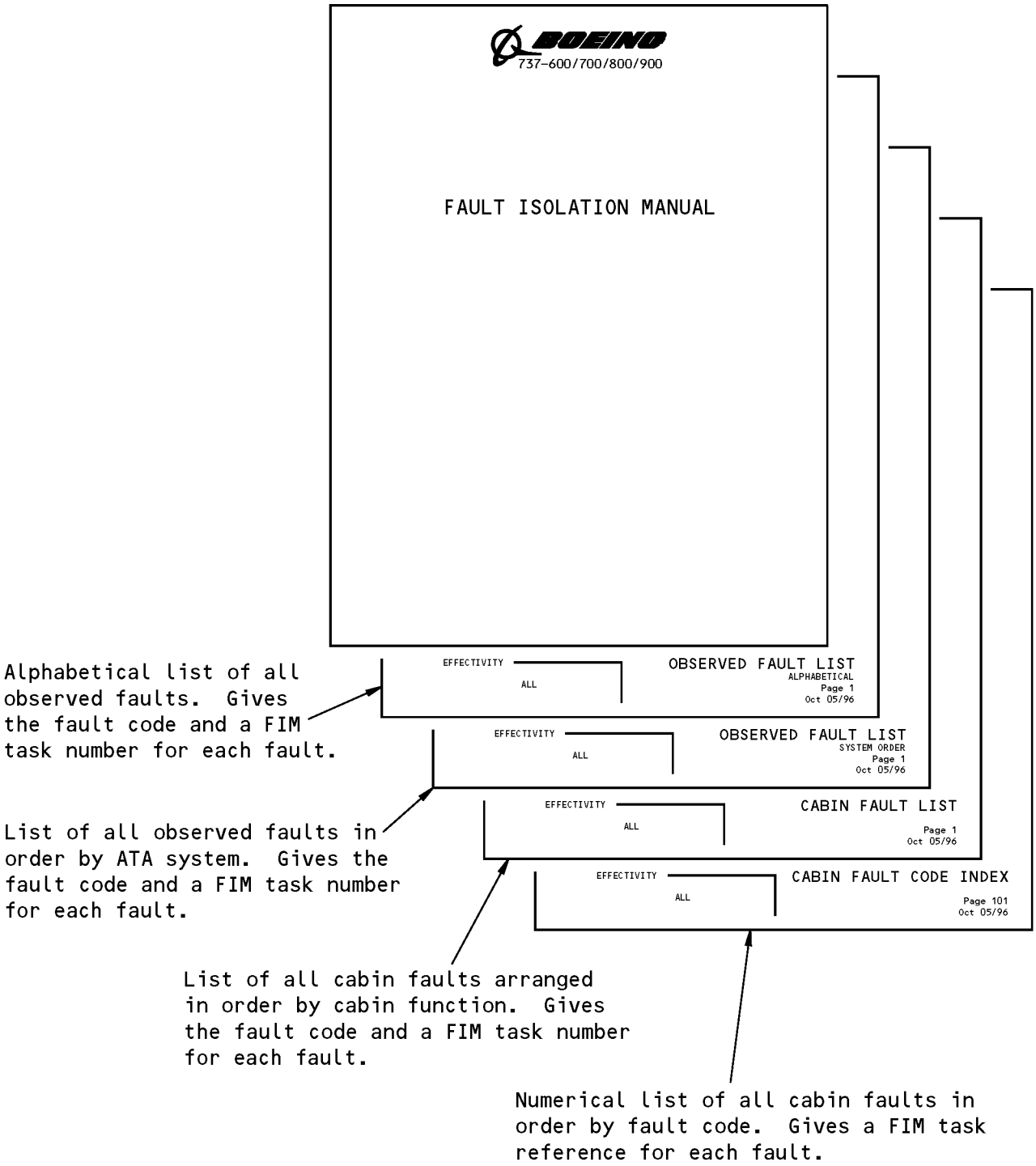

Subjects at Front of FIM
Figure 5

BOEING PROPRIETARY - Copyright © Unpublished Work - See title page for details

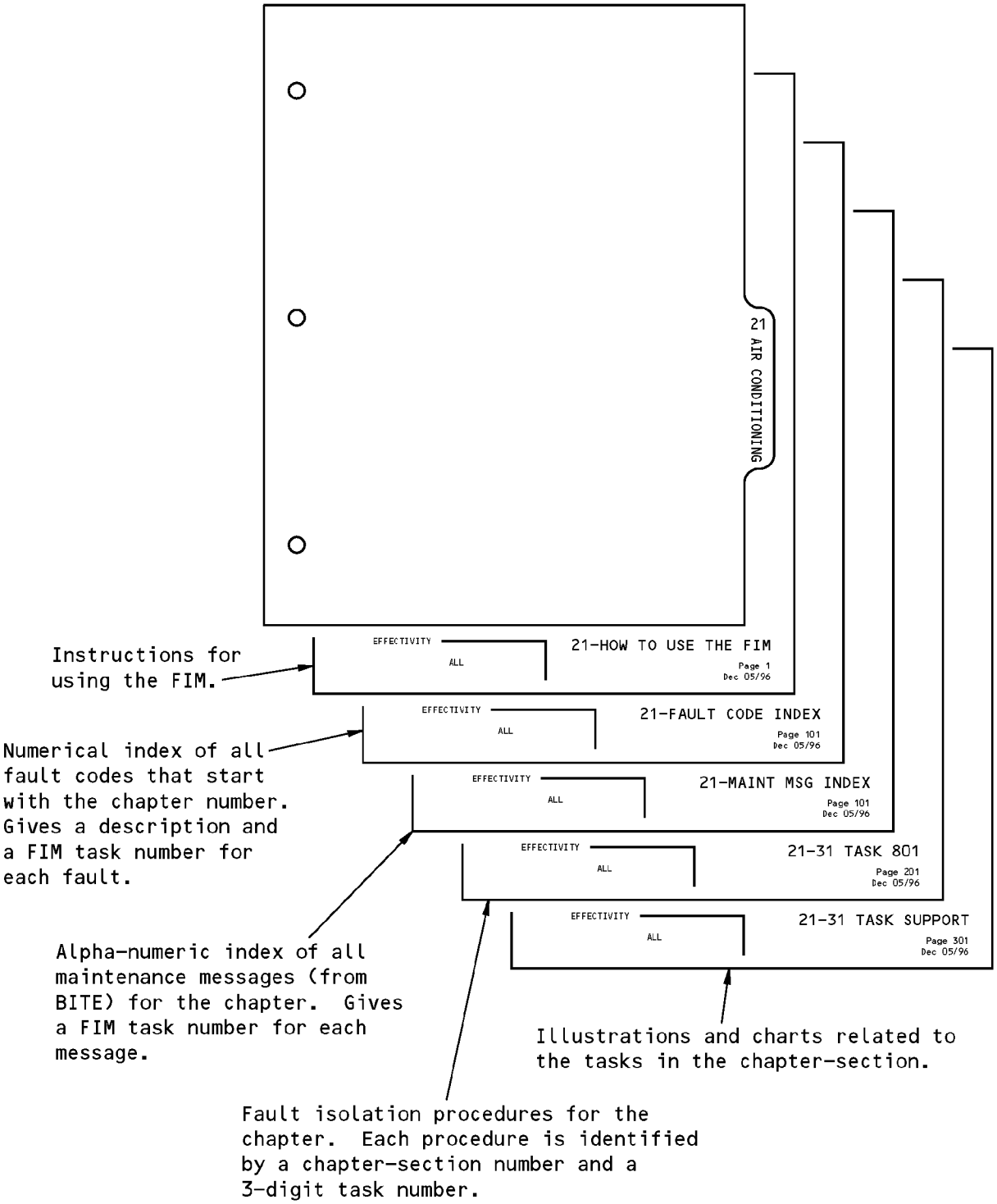

Subjects in Each FIM Chapter
Figure 6

BOEING PROPRIETARY - Copyright © Unpublished Work - See title page for details

FAULT CODE	FAULT DESCRIPTION	GO TO FIM TASK
231 030 00	VHF 1 control panel problem.	23-12 TASK 814
231 040 00	VHF 2 control panel problem.	23-12 TASK 814
231 050 00	VHF 3 control panel problem.	23-12 TASK 814
231 060 31	HF 1 radio: reception and transmission problem at one station - captain's.	23-11 TASK 806
231 060 32	HF 1 radio: reception and transmission problem at one station - first officer's.	23-11 TASK 806
231 060 33	HF 1 radio: reception and transmission problem at one station - first observer's.	23-11 TASK 806
231 060 48	HF 1 radio: reception and transmission problem at all stations.	23-11 TASK 806
231 070 31	HF 1 radio: reception problem at one station - captain's.	23-11 TASK 806
231 070 32	HF 1 radio: reception problem at one station - first officer's.	23-11 TASK 806
231 070 33	HF 1 radio: reception problem at one station - first observer's.	23-11 TASK 806
231 070 48	HF 1 radio: reception problem at all stations.	23-11 TASK 806
231 080 31	HF 1 radio: transmission problem at one station - captain's.	23-11 TASK 806
231 080 32	HF 1 radio: transmission problem at one station - first officer's.	23-11 TASK 806
231 080 33	HF 1 radio: transmission problem at one station - first observer's.	23-11 TASK 806
231 080 48	HF 1 radio: transmission problem at all stations.	23-11 TASK 806
231 180 31	HF 2 radio: reception and transmission problem at one station - captain's.	23-11 TASK 806
231 180 32	HF 2 radio: reception and transmission problem at one station - first officer's.	23-11 TASK 806
231 180 33	HF 2 radio: reception and transmission problem at one station - first observer's.	23-11 TASK 806
231 180 48	HF 2 radio: reception and transmission problem at all stations.	23-11 TASK 806
231 190 31	HF 2 radio: reception problem at one station - captain's.	23-11 TASK 806
231 190 32	HF 2 radio: reception problem at one station - first officer's.	23-11 TASK 806
231 190 33	HF 2 radio: reception problem at one station - first observer's.	23-11 TASK 806
231 190 48	HF 2 radio: reception problem at all stations.	23-11 TASK 806
231 200 31	HF 2 radio: transmission problem at one station - captain's.	23-11 TASK 806
231 200 32	HF 2 radio: transmission problem at one station - first officer's.	23-11 TASK 806
231 200 33	HF 2 radio: transmission problem at one station - first observer's.	23-11 TASK 806
231 200 48	HF 2 radio: transmission problem at all stations.	23-11 TASK 806

BOEING PROPRIETARY - Copyright © Unpublished Work - See title page for details

FAULT CODE	FAULT DESCRIPTION	GO TO FIM TASK
231 300 31	Radio tuning panel problem - captain's.	23-12 TASK 815
231 300 32	Radio tuning panel problem - first officer's.	23-12 TASK 815
231 300 33	Radio tuning panel problem - first observer's.	23-12 TASK 815
231 310 31	VHF 1 radio: reception and transmission problem at one station - captain's.	23-12 TASK 816
231 310 32	VHF 1 radio: reception and transmission problem at one station - first officer's.	23-12 TASK 816
231 310 33	VHF 1 radio: reception and transmission problem at one station - first observer's.	23-12 TASK 816
231 310 48	VHF 1 radio: reception and transmission problem at all stations.	23-12 TASK 816
231 320 31	VHF 1 radio: reception problem at one station - captain's.	23-12 TASK 816
231 320 32	VHF 1 radio: reception problem at one station - first officer's.	23-12 TASK 816
231 320 33	VHF 1 radio: reception problem at one station - first observer's.	23-12 TASK 816
231 320 48	VHF 1 radio: reception problem at all stations.	23-12 TASK 816
231 330 31	VHF 1 radio: transmission problem at one station - captain's.	23-12 TASK 816
231 330 32	VHF 1 radio: transmission problem at one station - first officer's.	23-12 TASK 816
231 330 33	VHF 1 radio: transmission problem at one station - first observer's.	23-12 TASK 816
231 330 48	VHF 1 radio: transmission problem at all stations.	23-12 TASK 816
231 430 31	VHF 2 radio: reception and transmission problem at one station - captain's.	23-12 TASK 816
231 430 32	VHF 2 radio: reception and transmission problem at one station - first officer's.	23-12 TASK 816
231 430 33	VHF 2 radio: reception and transmission problem at one station - first observer's.	23-12 TASK 816
231 430 48	VHF 2 radio: reception and transmission problem at all stations.	23-12 TASK 816
231 440 31	VHF 2 radio: reception problem at one station - captain's.	23-12 TASK 816
231 440 32	VHF 2 radio: reception problem at one station - first officer's.	23-12 TASK 816
231 440 33	VHF 2 radio: reception problem at one station - first observer's.	23-12 TASK 816
231 440 48	VHF 2 radio: reception problem at all stations.	23-12 TASK 816
231 450 31	VHF 2 radio: transmission problem at one station - captain's.	23-12 TASK 816
231 450 32	VHF 2 radio: transmission problem at one station - first officer's.	23-12 TASK 816
231 450 33	VHF 2 radio: transmission problem at one station - first observer's.	23-12 TASK 816
231 450 48	VHF 2 radio: transmission problem at all stations.	23-12 TASK 816

BOEING PROPRIETARY - Copyright © Unpublished Work - See title page for details

FAULT CODE	FAULT DESCRIPTION	GO TO FIM TASK
231 550 31	VHF 3 radio: reception and transmission problem at one station - captain's.	23-12 TASK 816
231 550 32	VHF 3 radio: reception and transmission problem at one station - first officer's.	23-12 TASK 816
231 550 33	VHF 3 radio: reception and transmission problem at one station - first observer's.	23-12 TASK 816
231 550 48	VHF 3 radio: reception and transmission problem at all stations.	23-12 TASK 816
231 560 31	VHF 3 radio: reception problem at one station - captain's.	23-12 TASK 816
231 560 32	VHF 3 radio: reception problem at one station - first officer's.	23-12 TASK 816
231 560 33	VHF 3 radio: reception problem at one station - first observer's.	23-12 TASK 816
231 560 48	VHF 3 radio: reception problem at all stations.	23-12 TASK 816
231 570 31	VHF 3 radio: transmission problem at one station - captain's.	23-12 TASK 816
231 570 32	VHF 3 radio: transmission problem at one station - first officer's.	23-12 TASK 816
231 570 33	VHF 3 radio: transmission problem at one station - first observer's.	23-12 TASK 816
231 570 48	VHF 3 radio: transmission problem at all stations.	23-12 TASK 816
232 020 00	SELCAL: call switch does not reset for HF 1, PTT reset OK.	23-28 TASK 801
232 030 00	SELCAL: call switch does not reset for HF 2, PTT reset OK.	23-28 TASK 801
232 040 00	SELCAL: call switch does not reset for VHF 1, PTT reset OK.	23-28 TASK 801
232 050 00	SELCAL: call switch does not reset for VHF 2, PTT reset OK.	23-28 TASK 801
232 060 00	SELCAL: call switch does not reset for VHF 3, PTT reset OK.	23-28 TASK 801
232 080 00	SELCAL: call light does not come on for calls on HF 1.	23-28 TASK 802
232 090 00	SELCAL: call light does not come on for calls on HF 2.	23-28 TASK 802
232 100 00	SELCAL: call light does not come on for calls on VHF 1.	23-28 TASK 802
232 110 00	SELCAL: call light does not come on for calls on VHF 2.	23-28 TASK 802
232 120 00	SELCAL: call light does not come on for calls on VHF 3.	23-28 TASK 802
232 140 00	SELCAL: chime does not operate for calls on HF 1, SELCAL call light comes on.	23-28 TASK 803
232 150 00	SELCAL: chime does not operate for calls on HF 2, SELCAL call light comes on.	23-28 TASK 803
232 160 00	SELCAL: chime does not operate for calls on VHF 1, SELCAL call light comes on.	23-28 TASK 803
232 170 00	SELCAL: chime does not operate for calls on VHF 2, SELCAL call light comes on.	23-28 TASK 803
232 180 00	SELCAL: chime does not operate for calls on VHF 3, SELCAL call light comes on.	23-28 TASK 803

BOEING PROPRIETARY - Copyright © Unpublished Work - See title page for details

FAULT CODE	FAULT DESCRIPTION	GO TO FIM TASK
232 200 00	SELCAL: does not operate for HF 1.	23-28 TASK 804
232 210 00	SELCAL: does not operate for HF 2.	23-28 TASK 804
232 220 00	SELCAL: does not operate for VHF 1.	23-28 TASK 804
232 230 00	SELCAL: does not operate for VHF 2.	23-28 TASK 804
232 240 00	SELCAL: does not operate for VHF 3.	23-28 TASK 804
232 250 00	SELCAL: does not operate for any radio.	23-28 TASK 804
232 310 00	ACARS: does not operate correctly.	23-27 TASK 801
232 410 00	Emergency Locator Transmitter (ELT): no ELT signal on VHF when ELT switch set to ON during test.	23-24 TASK 801
233 010 00	Passenger address system - does not operate from flight compartment.	23-31 TASK 801
233 020 00	Passenger address system - distorted from flight compartment.	23-31 TASK 801
233 030 00	Passenger address system - intermittent from flight compartment.	23-31 TASK 801
233 040 00	Passenger address system - volume problem from flight compartment.	23-31 TASK 802
234 010 00	Service interphone: does not connect to flight interphone.	23-41 TASK 801
234 020 48	Service interphone: does not operate - all jacks.	23-41 TASK 801
234 030 48	Service interphone: distorted - all jacks.	23-41 TASK 803
234 040 48	Service interphone: intermittent - all jacks.	23-41 TASK 803
234 050 48	Service interphone: volume problem - all jacks.	23-41 TASK 803
234 060 00	Service interphone: does not operate - jack at EE rack.	23-41 TASK 802
234 070 00	Service interphone: distorted - jack at EE rack.	23-41 TASK 802
234 080 00	Service interphone: intermittent - jack at EE rack.	23-41 TASK 802
234 090 00	Service interphone: volume problem - jack at EE rack.	23-41 TASK 802
234 100 00	Service interphone: does not operate - jack adjacent to APU.	23-41 TASK 802
234 110 00	Service interphone: intermittent - jack adjacent to APU.	23-41 TASK 802
234 120 00	Service interphone: distorted - jack adjacent to APU.	23-41 TASK 802
234 130 00	Service interphone: volume problem - jack adjacent to APU.	23-41 TASK 802
234 140 00	Service interphone: does not operate - jack at aft entry light panel.	23-41 TASK 802
234 150 00	Service interphone: distorted - jack at aft entry light panel.	23-41 TASK 802
234 160 00	Service interphone: intermittent - jack at aft entry light panel.	23-41 TASK 802

BOEING PROPRIETARY - Copyright © Unpublished Work - See title page for details

FAULT CODE	FAULT DESCRIPTION	GO TO FIM TASK
234 170 00	Service interphone: volume problem - jack at aft entry light panel.	23-41 TASK 802
234 180 00	Service interphone: does not operate - jack at external power receptacle panel.	23-41 TASK 802
234 190 00	Service interphone: distorted - jack at external power receptacle panel.	23-41 TASK 802
234 200 00	Service interphone: intermittent - jack at external power receptacle panel.	23-41 TASK 802
234 210 00	Service interphone: volume problem - jack at external power receptacle panel.	23-41 TASK 802
234 220 00	Service interphone: does not operate - jack at left wheel well.	23-41 TASK 802
234 230 00	Service interphone: distorted - jack at left wheel well.	23-41 TASK 802
234 240 00	Service interphone: intermittent - jack at left wheel well.	23-41 TASK 802
234 250 00	Service interphone: volume problem - jack at left wheel well.	23-41 TASK 802
234 260 00	Service interphone: does not operate - jack at right wheel well.	23-41 TASK 802
234 270 00	Service interphone: distorted - jack at right wheel well.	23-41 TASK 802
234 280 00	Service interphone: intermittent - jack at right wheel well.	23-41 TASK 802
234 290 00	Service interphone: volume problem - jack at right wheel well.	23-41 TASK 802
234 300 00	Service interphone: does not operate - jack at right wing refueling slat.	23-41 TASK 802
234 310 00	Service interphone: distorted - jack at right wing refueling slat.	23-41 TASK 802
234 320 00	Service interphone: intermittent - jack at right wing refueling slat.	23-41 TASK 802
234 330 00	Service interphone: volume problem - jack at right wing refueling slat.	23-41 TASK 802
234 340 00	Call horn: does not sound.	23-43 TASK 801
234 350 00	Call horn: operates continuously.	23-43 TASK 802
234 360 00	Call system: does not operate, ground crew to flight compartment.	23-43 TASK 803
234 370 00	Call system: call light does not come on, ground crew to flight compartment.	23-43 TASK 804
234 380 00	Call system: call light does not come on, attendant to flight compartment.	23-42 TASK 801
234 390 00	Call system: chime does not sound in the flight compartment.	23-42 TASK 804
234 400 00	Call system: does not operate, flight compartment to attendant.	23-42 TASK 802
234 410 00	Service interphone: does not operate - jack in the electronic equipment bay.	23-41 TASK 802

BOEING PROPRIETARY - Copyright © Unpublished Work - See title page for details

FAULT CODE	FAULT DESCRIPTION	GO TO FIM TASK
234 420 00	Service interphone: intermittent - jack in the electronic equipment bay.	23-41 TASK 802
234 430 00	Service interphone: distorted - jack in the electronic equipment bay.	23-41 TASK 802
234 440 00	Service interphone: volume problem - jack in the electronic equipment bay.	23-41 TASK 802
235 010 31	Boom microphone/headset: does not operate - captain's.	23-51 TASK 801
235 010 32	Boom microphone/headset: does not operate - first officer's.	23-51 TASK 801
235 020 31	Boom microphone/headset: damaged - captain's.	23-51 TASK 802
235 020 32	Boom microphone/headset: damaged - first officer's.	23-51 TASK 802
235 030 31	Flight interphone: does not operate - captain's.	23-51 TASK 804
235 030 32	Flight interphone: does not operate - first officer's.	23-51 TASK 804
235 030 33	Flight interphone: does not operate - first observer's.	23-51 TASK 804
235 030 48	Flight interphone: does not operate - all stations.	23-51 TASK 803
235 040 31	Headphone: does not operate - captain's.	23-51 TASK 801
235 040 32	Headphone: does not operate - first officer's.	23-51 TASK 801
235 040 33	Headphone: does not operate - first observer's.	23-51 TASK 801
235 040 34	Headphone: does not operate - second observer's.	23-51 TASK 801
235 050 31	Hand microphone: does not operate - captain's.	23-51 TASK 801
235 050 32	Hand microphone: does not operate - first officer's.	23-51 TASK 801
235 050 33	Hand microphone: does not operate - first observer's.	23-51 TASK 801
235 060 31	Hand microphone: damaged - captain's.	23-51 TASK 802
235 060 32	Hand microphone: damaged - first officer's.	23-51 TASK 802
235 060 33	Hand microphone: damaged - first observer's.	23-51 TASK 802
235 070 31	Headphone: damaged - captain's.	23-51 TASK 802
235 070 32	Headphone: damaged - first officer's.	23-51 TASK 802
235 070 33	Headphone: damaged - first observer's.	23-51 TASK 802
235 070 34	Headphone: damaged - second observer's.	23-51 TASK 802
235 080 31	Speaker in the flight compartment: does not operate - captain's.	23-51 TASK 805
235 080 32	Speaker in the flight compartment: does not operate - first officer's.	23-51 TASK 806
235 101 31	Audio control panel indicator light problem - captain's.	23-51 TASK 807
235 101 32	Audio control panel indicator light problem - first officer's.	23-51 TASK 807
235 101 33	Audio control panel indicator light problem - first observer's.	23-51 TASK 807

BOEING PROPRIETARY - Copyright © Unpublished Work - See title page for details

FAULT CODE	FAULT DESCRIPTION	GO TO FIM TASK
235 102 31	Audio control panel volume control problem - captain's.	23-51 TASK 807
235 102 32	Audio control panel volume control problem - first officer's.	23-51 TASK 807
235 102 33	Audio control panel volume control problem - first observer's.	23-51 TASK 807
235 103 31	Audio control panel selector switch problem - captain's.	23-51 TASK 807
235 103 32	Audio control panel selector switch problem - first officer's.	23-51 TASK 807
235 103 33	Audio control panel selector switch problem - first observer's.	23-51 TASK 807
237 010 00	Voice recorder: signal problem at monitor jack.	23-71 TASK 801
237 020 00	Voice recorder: STATUS light or TEST light does not come on when TEST switch is pushed.	23-71 TASK 804
237 050 00	Voice recorder: system operation problem (airplanes with AUTO/ON switch).	23-71 TASK 805
237 051 00	Flight deck door surveillance system: no video at all three camera positions.	23-75 TASK 810
237 052 00	Flight deck door surveillance system: no video at one or two camera positions during daytime conditions.	23-75 TASK 811
237 053 00	Flight deck door surveillance system: no video at one or two camera positions during nighttime conditions.	23-75 TASK 812

BOEING PROPRIETARY - Copyright © Unpublished Work - See title page for details

LRU/SYSTEM	SHORT NAME	CHAPTER
Air Data Inertial Reference System	ADIRS	34
Air Traffic Controller Transponder - 1 (Left)	ATC XPDR - 1 (L)	34
Air Traffic Controller Transponder - 2 (Right)	ATC XPDR - 2 (R)	34
Airborne Vibration Monitor System Signal Conditioner	AVM SIG COND	77
Antiskid Control Unit	ANTISKID	32
Automatic Direction Finder Receiver - 1	ADF RECVR - 1	34
Autothrottle System	A/T	22
Auxiliary Power Unit	APU	49
Auxiliary Power Unit Generator Control Unit	APU GCU	24
Bus Power Control Unit	BPCU	24
Cabin Pressure Controller	CAB PRESS CON	21
Cabin Temperature Controller	CAB TEMP CONT	21
Cargo Electronic Unit - Forward	CEU - FWD	26
Cargo Electronic Unit - Lower	CEU - LOWER	26
Cargo Electronic Unit - Main Aft	CEU - MAIN AFT	26
Cargo Electronic Unit - Main Forward	CEU - MAIN FWD	26
Common Display System	CDS	31
Compartment Overheat Detection Control Module	WING/BODY OHT	26
Digital Flight Control System	DFCS	22
Distance Measurement Equipment Interrogator	DME INTRROGTR	34
Electrical Meters, Battery, and Galley Power Module	P5-13	24
Electronic Engine Controller - 1	ENGINE - 1	73
Electronic Engine Controller - 2	ENGINE - 2	73
Emergency Locator Transmitter	ELT	23
Engine Accessory Unit	ENG ACCY UNIT	78
Engine and Auxiliary Power Unit Fire Detection Control Module	ENG/APU FIRE	26
Flap/Slat Electronics Unit	FSEU	27
Flight Data Acquisition Unit	FDAU	31
Flight Management Computer System	FMCS	34
Fuel Quantity Indicating System	FQIS	28
Generator Control Unit - 1	GCU - 1	24
Generator Control Unit - 2	GCU - 2	24
Ground Proximity Computer	GROUND PROX	34
Head Up Display	HUD	34

BOEING PROPRIETARY - Copyright © Unpublished Work - See title page for details

LRU/SYSTEM	SHORT NAME	CHAPTER
High Frequency Transceiver	HF XCVR	23
Low Limit (35 Degree F) Controller - Left	35 DEG CONT L	21
Low Limit (35 Degree F) Controller - Right	35 DEG CONT R	21
Multi-Mode Receiver	MMR	34
Pack/Zone Temperature Controller - Left	PACK/ZN CON - L	21
Pack/Zone Temperature Controller - Right	PACK/ZN CON - R	21
Proximity Switch Electronics Unit	PSEU	32
Radio Altimeter Receiver/Transmitter	RADIO ALTIMTR	34
Stall Management Yaw Damper Computer - 1	SMYD - 1	27
Stall Management Yaw Damper Computer - 2	SMYD - 2	27
Traffic Alert and Collision Avoidance System Computer	TCAS COMPUTER	34
VHF Omnidirectional Ranging Marker Beacon Receiver	VOR/MKR RCVR	34
Very High Frequency Transceiver	VHF XCVR	23
Waste Tank Logic Control Module	WASTE TANK	38
Weather Radar Receiver/Transmitter	WEATHER RADAR	34
Window Heat Control Unit - Left Forward	WHCU - L FWD	30
Window Heat Control Unit - Left Side	WHCU - L SIDE	30
Window Heat Control Unit - Right Forward	WHCU - R FWD	30
Window Heat Control Unit - Right Side	WHCU - R SIDE	30

BOEING PROPRIETARY - Copyright © Unpublished Work - See title page for details

LRU/SYSTEM	MAINTENANCE MESSAGE	GO TO FIM TASK
ELT	LED flashes five times	23-24 TASK 806
ELT	LED flashes one time	23-24 TASK 802
ELT	LED flashes seven times	23-24 TASK 804
ELT	LED flashes three or four times	23-24 TASK 803
HF XCVR	CONTROL INPUT FAIL	23-11 TASK 802
HF XCVR	COUPLER FAIL	23-11 TASK 804
HF XCVR	EXTERNAL INPUT FAIL	23-11 TASK 802
HF XCVR	LRU FAIL	23-11 TASK 803
HF XCVR	LRU FAIL	23-11 TASK 803
VHF XCVR	ANTENNA FAIL	Reference Not Currently Available
VHF XCVR	CONTROL FAIL	23-12 TASK 812
VHF XCVR	LRU STATUS	23-12 TASK 811
VHF XCVR	TUNING PORT B MISSING INPUT	23-12 TASK 812
VHF XCVR	VHF DATA RADIO FAILED	23-12 TASK 811

BOEING PROPRIETARY - Copyright © Unpublished Work - See title page for details

801. HF Communication System - BITE Procedure

A. General

(1) You initiate a high frequency (HF) communication system BITE test:

HAP 038, 041-054; HAP 037, 039, 040 POST SB 737-23-1299

(a) The BITE is initiated from the front panel of the HF transceiver.

HAP 042-046, 051-053

(2) The HF transceiver is located in the aft cargo compartment on the electronic equipment rack E6.

HAP 038, 041-047, 049-054; HAP 037, 039, 040 POST SB 737-23-1299

(3) The HF transceiver is located in the main equipment center on the electronic equipment rack E8.

HAP 048

(4) The No. 1 and No. 2 HF transceivers are located in the main equipment center on the electronic equipment rack E8.

HAP 038, 041-054; HAP 037, 039, 040 POST SB 737-23-1299

(5) The HF communication system BITE test does a self check for existing internal and external faults. Results of the BITE test are displayed via fault lights on the front panel of the HF transceiver.

HAP 038, 041-054, 102-999; HAP 037, 039, 040 POST SB 737-23-1299

B. Procedure

WARNING: DO NOT OPERATE THE HF SYSTEM WHILE THE AIRPLANE IS REFUELED OR DEFUELED. THIS CAN CAUSE INJURY TO PERSONNEL AND DAMAGE TO EQUIPMENT.

WARNING: MAKE SURE THAT PERSONNEL STAY A MINIMUM OF 6 FEET AWAY FROM THE VERTICAL STABILIZER WHEN THE HF SYSTEM TRANSMITS. RF ENERGY FROM THE HF ANTENNA CAN CAUSE INJURIES TO PERSONNEL.

(1) Do not operate the HF system while a fuel operation is done on the airplane.

HAP 038, 041-054; HAP 037, 039, 040 POST SB 737-23-1299

(2) Do these steps to do the BITE procedure for the HF communication system:

HAP 038, 041-047, 049-054; HAP 037, 039, 040 POST SB 737-23-1299

(a) Push and release the TEST switch on the HF transceiver front panel.

HAP 048

(b) Push and release the TEST switch on the applicable HF transceiver front panel (HF-1 or HF-2).

HAP 038, 041-054; HAP 037, 039, 040 POST SB 737-23-1299

(c) Make sure that these conditions occur:

1) All three LEDs on the HF transceiver front panel turn red for one to three seconds.
2) The LRU STATUS LED turns green and the KEY INTERLOCK and CONTROL FAIL LEDs stay red for one to three seconds.
3) All three LEDs go off for one to seven seconds.
4) The LRU STATUS LED comes on green for about 30 seconds and the KEY INTERLOCK and CONTROL FAIL LEDs stay off.

BOEING PROPRIETARY - Copyright © Unpublished Work - See title page for details

(d) If the LRU STATUS LED comes on green for about 30 seconds and the KEY INTERLOCK and CONTROL FAIL LEDs stay off, then the BITE test passed.

(e) If the red LRU STATUS, KEY INTERLOCK, or CONTROL FAIL LED is on, then refer table at the end of this task to find the fault isolation task for the applicable maintenance message.

NOTE: LRU STATUS is the same as LRU FAIL.

CONTROL FAIL is the same as CONTROL INPUT FAIL.

(3) Do these steps to do the BITE procedure for the HF communication system:

HAP 038, 041-047, 049-054; HAP 037, 039, 040 POST SB 737-23-1299

(a) Push and hold the TEST switch on the HF transceiver front panel.

1) Make sure that the LRU FAIL, COUPLER FAIL, and EXTERNAL INPUT FAIL lights come on and stay on.

HAP 048

(b) Push and hold the TEST switch on the applicable HF transceiver front panel (HF-1 or HF-2).

1) Make sure that the LRU FAIL, COUPLER FAIL, and EXTERNAL INPUT FAIL lights come on and stay on.

HAP 038, 041-054; HAP 037, 039, 040 POST SB 737-23-1299

(c) Release the TEST switch.

(d) If the LRU FAIL, COUPLER FAIL, and EXTERNAL INPUT FAIL lights go off, then the BITE test passed.

(e) If a LRU FAIL, COUPLER FAIL, or EXTERNAL INPUT FAIL light remains on, then refer to the table at the end of this task to find the fault isolation task for the applicable maintenance message.

HAP 038, 041-054, 102-999; HAP 037, 039, 040 POST SB 737-23-1299

(4) If there are any maintenance messages, refer to the table at the end of this task to find the fault isolation task for the applicable maintainence messages.

END OF TASK

LRU/SYSTEM	MAINTENANCE MESSAGE	GO TO FIM TASK
HF XCVR	CONTROL INPUT FAIL	23-11 TASK 802
HF XCVR	COUPLER FAIL	23-11 TASK 804
HF XCVR	EXTERNAL INPUT FAIL	23-11 TASK 802
HF XCVR	LRU FAIL	23-11 TASK 803
HF XCVR	LRU FAIL	23-11 TASK 803

BOEING PROPRIETARY - Copyright © Unpublished Work - See title page for details

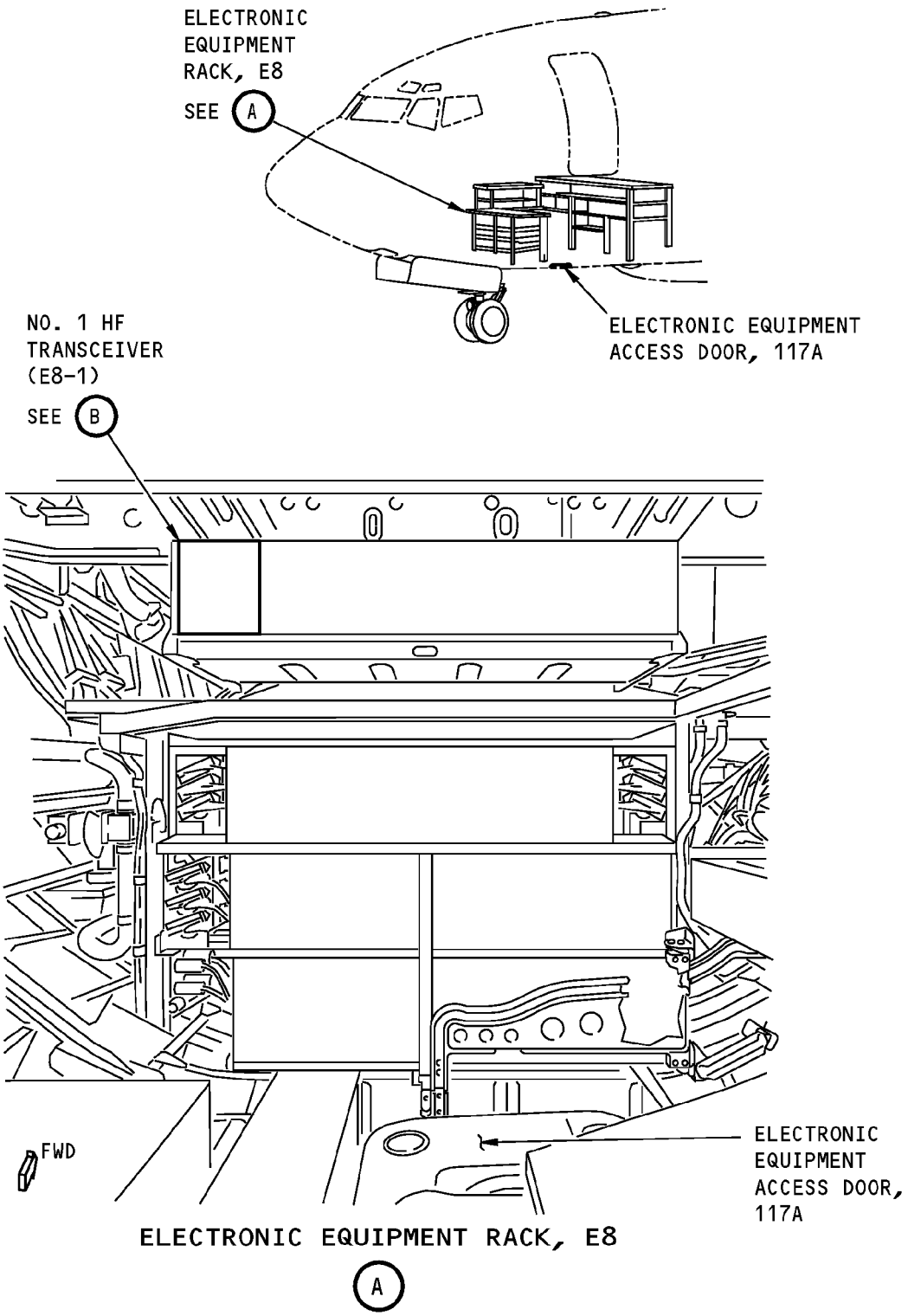

HF Transciever Installation
Figure 201 / 23-11-00-990-830

BOEING PROPRIETARY - Copyright © Unpublished Work - See title page for details

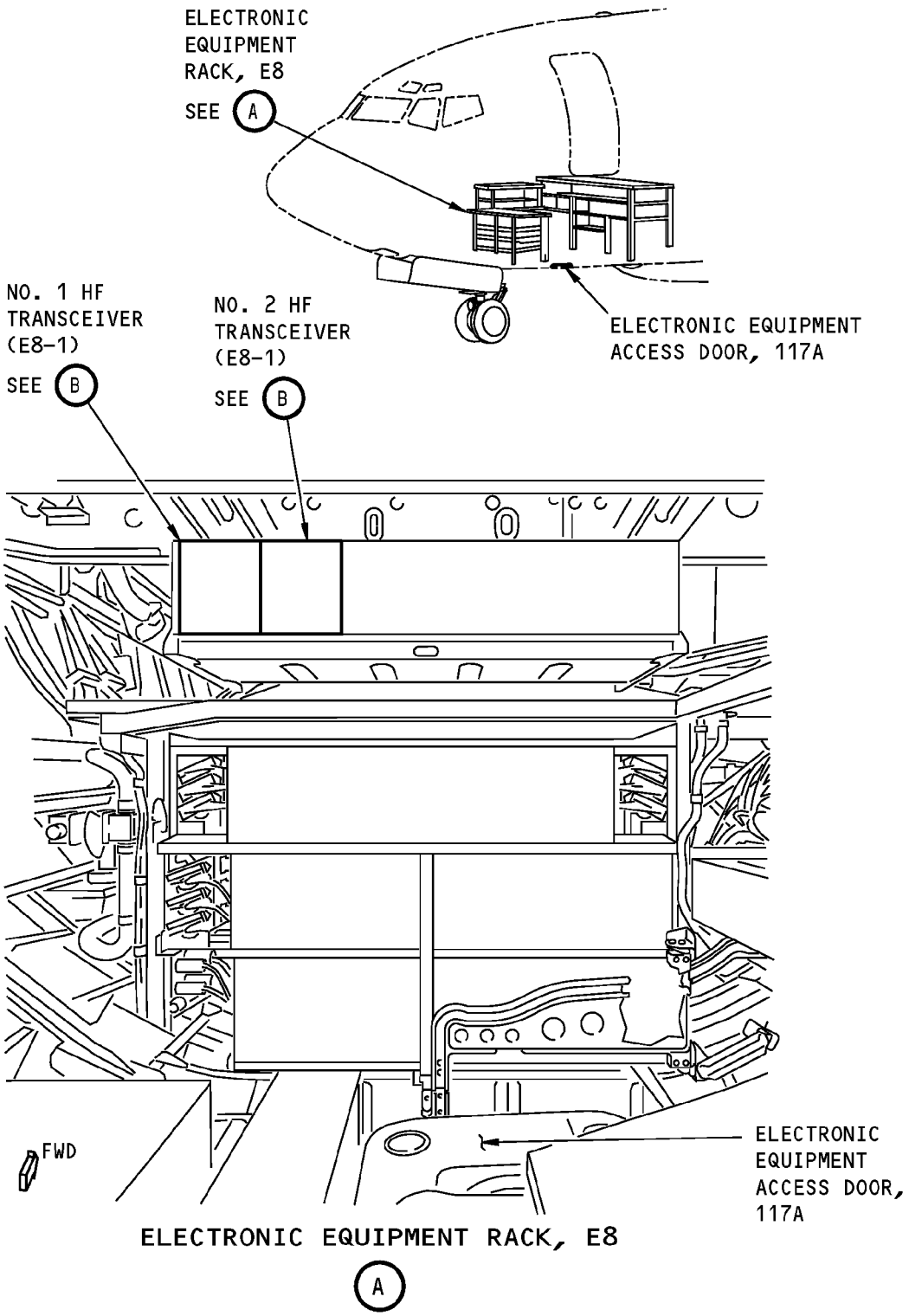

HF Transceiver Installation
Figure 202 / 23-11-00-990-829

BOEING PROPRIETARY - Copyright © Unpublished Work - See title page for details

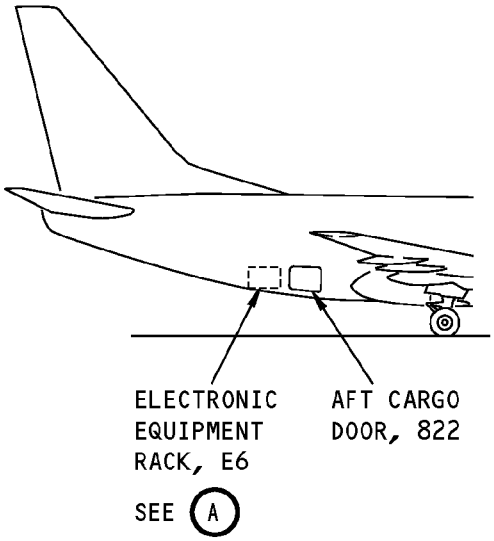

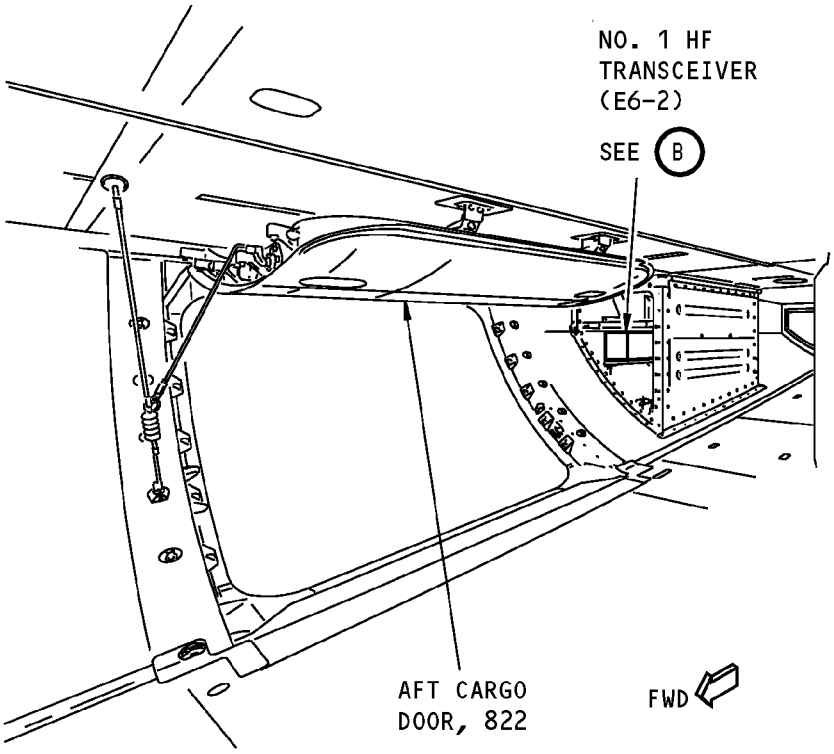

ELECTRONIC EQUIPMENT RACK, E6

A

HF Tranceiver Installation
Figure 203 / 23-11-00-990-828

BOEING PROPRIETARY - Copyright © Unpublished Work - See title page for details

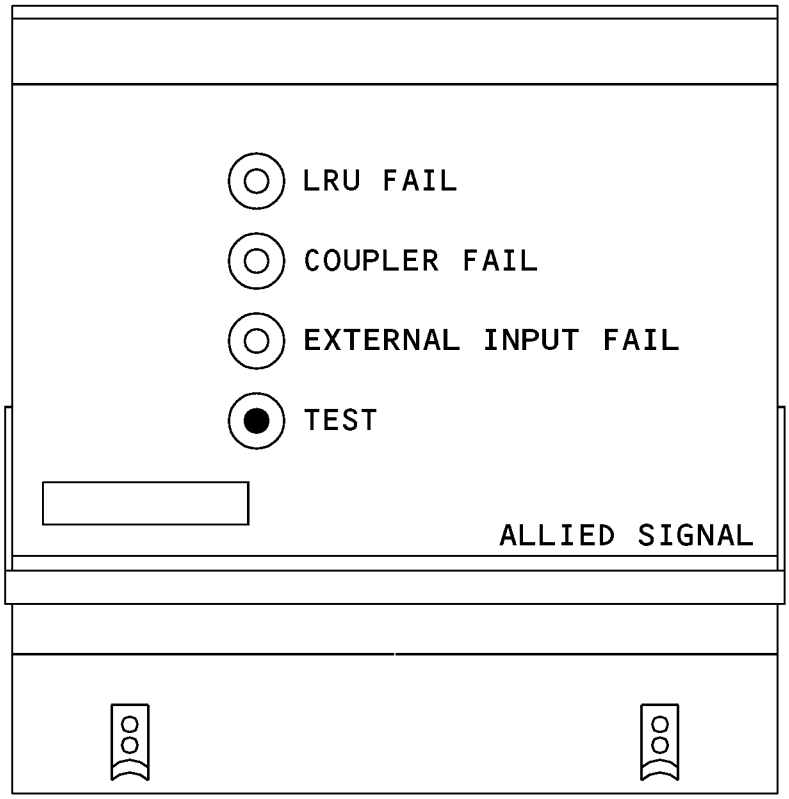

HF TRANSCEIVER

HF Transceiver Installation
Figure 204 / 23-11-00-990-819

BOEING PROPRIETARY - Copyright © Unpublished Work - See title page for details

802. HF Transceiver CONTROL INPUT FAIL Problem - Fault Isolation

A. Description

(1) This task is for these maintenance messages:

HAP 038, 041-054; HAP 037, 039, 040 POST SB 737-23-1299

(a) EXTERNAL INPUT FAIL

HAP 038, 041-054, 102-999; HAP 037, 039, 040 POST SB 737-23-1299

(2) The HF transceiver receives no input from the radio tuning panel.

B. Possible Causes

(1) Radio tuning panel, P8-71 (RTP-1) or P8-72 (RTP-2).

(2) Wiring problem.

HAP 038, 041-047, 049-054; HAP 037, 039, 040 POST SB 737-23-1299

(3) HF transceiver, M226 (HF-1).

HAP 048

(4) HF transceiver, M226 (HF-1) or M439 (HF-2).

HAP 038, 041-054, 102-999; HAP 037, 039, 040 POST SB 737-23-1299

C. Circuit Breakers

(1) These are the primary circuit breakers related to the fault:

CAPT Electrical System Panel, P18-2

Row	Col	Number	Name
D	11	C00165	COMMUNICATIONS VHF 1

HAP 038, 041-054; HAP 037, 039, 040 POST SB 737-23-1299

E	11	C00839	COMMUNICATIONS HF 1

F/O Electrical System Panel, P6-1

Row	Col	Number	Name

HAP 038, 041-054, 102-999; HAP 037, 039, 040 POST SB 737-23-1299

C	3	C00166	COMMUNICATIONS VHF 2

HAP 048

D	2	C00857	COMMUNICATIONS HF 2

HAP 038, 041-054, 102-999; HAP 037, 039, 040 POST SB 737-23-1299

D. Related Data

HAP 038, 041-047, 049-054; HAP 037, 039, 040 POST SB 737-23-1299

(1) (SSM 23-11-11)

HAP 048

(2) (SSM 23-11-11, 23-11-21)

HAP 038, 041-054, 102-999; HAP 037, 039, 040 POST SB 737-23-1299

HAP 038, 041-047, 049-054; HAP 037, 039, 040 POST SB 737-23-1299

(3) (WDM 23-11-11)

HAP 048

(4) (WDM 23-11-11, 23-11-21)

BOEING PROPRIETARY - Copyright © Unpublished Work - See title page for details

HAP 048 (Continued)

HAP 038, 041-054, 102-999; HAP 037, 039, 040 POST SB 737-23-1299

E. Initial Evaluation

HAP 038, 041-054; HAP 037, 039, 040 POST SB 737-23-1299

(1) Do this task: HF Communication System - BITE Procedure, 23-11 TASK 801.

(a) If the maintenance message does not show on the front panel of the transceiver, then there was an intermittent fault.

(b) If the maintenance message shows on the front panel of the transceiver, then continue.

HAP 038, 041-054, 102-999; HAP 037, 039, 040 POST SB 737-23-1299

(2) Do these steps at the radio tuning panel, P8-71 (RTP-1) or P8-72 (RTP-2), on the aft electronic panel, P8:

HAP 038, 041-047, 049-054; HAP 037, 039, 040 POST SB 737-23-1299

(a) Push the HF 1 switch light.

1) Make sure that the switch light comes on.

HAP 048

(b) Push the applicable HF switch light (HF 1 or HF 2).

1) Make sure that the switch light comes on.

HAP 038, 041-054, 102-999; HAP 037, 039, 040 POST SB 737-23-1299

(c) Set the STANDBY frequency window to an approved test frequency.

(d) Push the display transfer switch.

(e) Make sure that the ACTIVE frequency display shows the set frequency.

F. Fault Isolation Procedure - Frequency Is Not Shown

(1) Do this check for 28V DC at the radio tuning panel:

(a) Remove the radio tuning panel, P8-71 (RTP-1) or P8-72 (RTP-2). To remove it, do this task: Radio Tuning Panel (RTP) - Removal, AMM TASK 23-12-41-000-801.

(b) Close these circuit breakers:

CAPT Electrical System Panel, P18-2

Row	Col	Number	Name
D	11	C00165	COMMUNICATIONS VHF 1

F/O Electrical System Panel, P6-1

Row	Col	Number	Name
C	3	C00166	COMMUNICATIONS VHF 2

(c) Do a check for 28V DC at pin 40 of connector D203 (RTP-1) or D209 (RTP-2), to structure ground.

(d) Open these circuit breakers:

CAPT Electrical System Panel, P18-2

Row	Col	Number	Name
D	11	C00165	COMMUNICATIONS VHF 1

BOEING PROPRIETARY - Copyright © Unpublished Work - See title page for details

F/O Electrical System Panel, P6-1

Row	Col	Number	Name
C	3	C00166	COMMUNICATIONS VHF 2

(e) If there was 28V DC at pin 40 of connector D203 (RTP-1) or D209 (RTP-2), then do these steps:

1) Install a new radio tuning panel, P8-71 (RTP-1) or P8-72 (RTP-2). To install it, do this task: Radio Tuning Panel (RTP) - Installation, AMM TASK 23-12-41-400-801.

2) Do this task: HF Communication System - BITE Procedure, 23-11 TASK 801.

a) If the maintenance message does not show on the front panel of the transceiver, then you corrected the fault.

(f) If there was no 28V DC at pin 40 of connector D203 (RTP-1) or D209 (RTP-2), then continue.

(2) Do this check for 28V DC at the circuit breaker:

(a) Do a check for 28V DC between the load terminal of VHF-1 circuit breaker C165, or VHF-2 circuit breaker C166, and structure ground.

(b) If there is no 28V DC at the load terminal of VHF-1 circuit breaker C165, or VHF-2 circuit breaker C166, then do these steps:

1) Replace one of these circuit breakers:

CAPT Electrical System Panel, P18-2

Row	Col	Number	Name
D	11	C00165	COMMUNICATIONS VHF 1

F/O Electrical System Panel, P6-1

Row	Col	Number	Name
C	3	C00166	COMMUNICATIONS VHF 2

2) Re-install the radio tuning panel, P8-71 (RTP-1) or P8-72 (RTP-2). To install it, do this task: Radio Tuning Panel (RTP) - Installation, AMM TASK 23-12-41-400-801.

3) Do this task: HF Communication System - BITE Procedure, 23-11 TASK 801.

a) If the maintenance message does not show on the front panel of the transceiver, then you corrected the fault.

(c) If there is 28V DC at the load terminal of VHF-1 circuit breaker C165, or VHF-2 circuit breaker C166, then do these steps:

1) Repair the wiring between pin 40 of connector, D203 (RTP-1) or D209 (RTP-2), at the radio tuning panel, P8-71 (RTP-1) or P8-72 (RTP-2), and the load terminal of VHF-1 circuit breaker, C165, or VHF-2 circuit breaker, C166, at the circuit breaker panel, P18-2 (VHF-1) or P6-1 (VHF-2)

2) Re-install the radio tuning panel, P8-71 (RTP-1) or P8-72 (RTP-2). To install it, do this task: Radio Tuning Panel (RTP) - Installation, AMM TASK 23-12-41-400-801

3) Do this task: HF Communication System - BITE Procedure, 23-11 TASK 801.

a) If the maintenance message does not show on the front panel of the transceiver, then you corrected the fault.

G. Fault Isolation Procedure - Frequency Is Shown

(1) Replace the radio tuning panel, P8-71 (RTP-1) or P8-72 (RTP-2).

BOEING PROPRIETARY - Copyright © Unpublished Work - See title page for details

These are the tasks:

Radio Tuning Panel (RTP) - Removal, AMM TASK 23-12-41-000-801,

Radio Tuning Panel (RTP) - Installation, AMM TASK 23-12-41-400-801.

(2) Do this task: HF Communication System - BITE Procedure, 23-11 TASK 801.

(a) If the maintenance message does not show on the front panel of the transceiver, then you corrected the fault.

(b) If the maintenance message shows on the front panel of the transceiver, then continue.

HAP 038, 041-047, 049-054; HAP 037, 039, 040 POST SB 737-23-1299

(3) Replace the HF transceiver, M226 (HF-1).

These are the tasks:

HF Transceiver - Removal, AMM TASK 23-11-21-000-801,

HF Transceiver - Installation, AMM TASK 23-11-21-400-801.

(a) Do this task: HF Communication System - BITE Procedure, 23-11 TASK 801.

1) If the maintenance message does not show on the front panel of the transceiver, then you corrected the fault.

2) If the maintenance message shows on the front panel of the transceiver, then continue.

HAP 048

(4) Replace the HF transceiver, M226 (HF-1) or M439 (HF-2).

These are the tasks:

HF Transceiver - Removal, AMM TASK 23-11-21-000-801,

HF Transceiver - Installation, AMM TASK 23-11-21-400-801.

(a) Do this task: HF Communication System - BITE Procedure, 23-11 TASK 801.

1) If the maintenance message does not show on the front panel of the transceiver, then you corrected the fault.

2) If the maintenance message shows on the front panel of the transceiver, then continue.

HAP 038, 041-047, 049-054; HAP 037, 039, 040 POST SB 737-23-1299

(5) Do this check of the wiring:

(a) Remove the radio tuning panels, P8-71 (RTP-1) and P8-72 (RTP-2). To remove them, do this task: Radio Tuning Panel (RTP) - Removal, AMM TASK 23-12-41-000-801.

(b) Remove the HF transceiver, M226 (HF-1). To remove it, do this task: HF Transceiver - Removal, AMM TASK 23-11-21-000-801.

(c) Do a wiring check between these pins of connector, D203 (RTP-1) and D209 (RTP-2), at the aft electronic panel, P8, and these pins of connector, D345B, at the electronic equipment shelft:

	RTP		
	RTP CONNECTOR		**XCVR CONNECTOR**
RTP-1 (P8-71)	**D203**		**D345B**
	pin 2	- - - - - - - - - - - - - - - - - - - -	pin E3
	pin 3	- - - - - - - - - - - - - - - - - - - -	pin F3

BOEING PROPRIETARY - Copyright © Unpublished Work - See title page for details

	RTP CONNECTOR D209		RTP XCVR CONNECTOR D345B
RTP-2 (P8-72)	pin 2	- - - - - - - - - - - - - - - - - - - -	pin G3
	pin 3	- - - - - - - - - - - - - - - - - - - -	pin H3

(d) Repair any airplane wiring problems you find.

(e) Re-install the radio tuning panels, P8-71 (RTP-1) and P8-72 (RTP-2). To install them, do this task: Radio Tuning Panel (RTP) - Installation, AMM TASK 23-12-41-400-801.

(f) Re-install the HF transceiver, M226 (HF-1). To install it, do this task: HF Transceiver - Installation, AMM TASK 23-11-21-400-801.

(g) Do this task: HF Communication System - BITE Procedure, 23-11 TASK 801.

1) If the maintenance message does not show on the front panel of the transceiver, then you corrected the fault.

HAP 048

(6) Do this check of the wiring:

(a) Remove the radio tuning panels, P8-71 (RTP-1) and P8-72 (RTP-2). To remove them, do this task: Radio Tuning Panel (RTP) - Removal, AMM TASK 23-12-41-000-801.

(b) Remove the HF transceiver, M226 (HF-1) or M439 (HF-2). To remove it, do this task: HF Transceiver - Removal, AMM TASK 23-11-21-000-801.

(c) Do a wiring check between these pins of connector, D203 (RTP-1) and D209 (RTP-2), at the aft electronic panel, P8, and these pins of tranceiver tray connector, D345B (HF-1) or D623B (HF-2), at the electronic equipment shelf:

	RTP CONNECTOR D203		RTP XCVR CONNECTOR D345B
RTP-1 (P8-71)	pin 2	- - - - - - - - - - - - - - - - - - - -	pin E3
	pin 3	- - - - - - - - - - - - - - - - - - - -	pin F3

	RTP CONNECTOR D209		RTP XCVR CONNECTOR D345B
RTP-2 (P8-72)	pin 2	- - - - - - - - - - - - - - - - - - - -	pin G3
	pin 3	- - - - - - - - - - - - - - - - - - - -	pin H3

RTP-1 (P8-71)	D203		D623B
	pin 2	- - - - - - - - - - - - - - - - - - - -	pin G3
	pin 3	- - - - - - - - - - - - - - - - - - - -	pin H3
RTP-2 (P8-72)	D209		D623B
	pin 2	- - - - - - - - - - - - - - - - - - - -	pin E3
	pin 3	- - - - - - - - - - - - - - - - - - - -	pin F3

(d) Repair any airplane wiring problems you find.

BOEING PROPRIETARY - Copyright © Unpublished Work - See title page for details

HAP 048 (Continued)

(e) Re-install the radio tuning panels, P8-71 (RTP-1) and P8-72 (RTP-2). To install them, do this task: Radio Tuning Panel (RTP) - Installation, AMM TASK 23-12-41-400-801.

(f) Re-install the HF transceiver, M226 (HF-1) or M439 (HF-2). To install it, do this task: HF Transceiver - Installation, AMM TASK 23-11-21-400-801.

(g) Do this task: HF Communication System - BITE Procedure, 23-11 TASK 801.

1) If the maintenance message does not show on the front panel of the transceiver, then you corrected the fault.

HAP 038, 041-054, 102-999; HAP 037, 039, 040 POST SB 737-23-1299

——————— END OF TASK ———————

803. HF Transceiver LRU FAIL Problem - Fault Isolation

A. Description

(1) This task is for this maintenance message:

(a) LRU FAIL

(2) The HF transceiver has an internal fault.

B. Possible Causes

HAP 038, 041-047, 049-054; HAP 037, 039, 040 POST SB 737-23-1299

(1) HF transceiver, M226 (HF-1).

HAP 048

(2) HF transceiver, M226 (HF-1) or M439 (HF-2).

HAP 038, 041-054, 102-999; HAP 037, 039, 040 POST SB 737-23-1299

C. Circuit Breakers

(1) These are the primary circuit breakers related to the fault:

CAPT Electrical System Panel, P18-2

Row	Col	Number	Name
HAP 038, 041-054; HAP 037, 039, 040 POST SB 737-23-1299			
E	11	C00839	COMMUNICATIONS HF 1

F/O Electrical System Panel, P6-1

Row	Col	Number	Name
HAP 048			
D	2	C00857	COMMUNICATIONS HF 2

HAP 038, 041-054, 102-999; HAP 037, 039, 040 POST SB 737-23-1299

D. Related Data

HAP 038, 041-047, 049-054; HAP 037, 039, 040 POST SB 737-23-1299

(1) (SSM 23-11-11)

HAP 048

(2) (SSM 23-11-11, 23-11-21)

HAP 038, 041-047, 049-054; HAP 037, 039, 040 POST SB 737-23-1299

(3) (WDM 23-11-11)

BOEING PROPRIETARY - Copyright © Unpublished Work - See title page for details

HAP 048

(4) (WDM 23-11-11, 23-11-21)

HAP 038, 041-054, 102-999; HAP 037, 039, 040 POST SB 737-23-1299

E. Initial Evaluation

(1) Do this task: HF Communication System - BITE Procedure, 23-11 TASK 801.

(a) If the maintenance message LRU FAIL does not show on the front panel of the transceiver, then there was an intermittent fault.

(b) If the maintenance message LRU FAIL shows on the front panel of the transceiver, then continue.

F. Fault Isolation Procedure

HAP 038, 041-047, 049-054; HAP 037, 039, 040 POST SB 737-23-1299

(1) Replace the HF transceiver, M226 (HF-1).

These are the tasks:

HF Transceiver - Removal, AMM TASK 23-11-21-000-801,

HF Transceiver - Installation, AMM TASK 23-11-21-400-801.

(a) Do this task: HF Communication System - BITE Procedure, 23-11 TASK 801.

1) If the maintenance message LRU FAIL does not show on the front panel of the transceiver, then you corrected the fault.

HAP 048

(2) Replace the HF transceiver, M226 (HF-1) or M439 (HF-2).

These are the tasks:

HF Transceiver - Removal, AMM TASK 23-11-21-000-801,

HF Transceiver - Installation, AMM TASK 23-11-21-400-801.

(a) Do this task: HF Communication System - BITE Procedure, 23-11 TASK 801.

1) If the maintenance message LRU FAIL does not show on the front panel of the transceiver, then you corrected the fault.

HAP 038, 041-054, 102-999; HAP 037, 039, 040 POST SB 737-23-1299

END OF TASK

804. KEY INTERLOCK or COUPLER FAIL Fault - Fault Isolation

A. Description

(1) This task is for maintenance message:

HAP 038, 041-054; HAP 037, 039, 040 POST SB 737-23-1299

(a) COUPLER FAIL

HAP 038, 041-054, 102-999; HAP 037, 039, 040 POST SB 737-23-1299

(2) The HF transceiver detects an antenna coupler failure.

B. Possible Causes

BOEING PROPRIETARY - Copyright © Unpublished Work - See title page for details

HAP 038, 041-047, 049-054; HAP 037, 039, 040 POST SB 737-23-1299

(1) HF antenna coupler, M227 (HF-1).

HAP 048

(2) HF antenna coupler, M227 (HF-1) or M440 (HF-2).

HAP 038, 041-047, 049-054; HAP 037, 039, 040 POST SB 737-23-1299

(3) HF transceiver, M226 (HF-1).

HAP 048

(4) HF transceiver, M226 (HF-1) or M439 (HF-2).

HAP 038, 041-054, 102-999; HAP 037, 039, 040 POST SB 737-23-1299

(5) Wiring problem.

(6) HF antenna, M228.

C. Circuit Breakers

(1) These are the primary circuit breakers related to the fault:

CAPT Electrical System Panel, P18-2

Row	Col	Number	Name
D	11	C00165	COMMUNICATIONS VHF 1

HAP 038, 041-054; HAP 037, 039, 040 POST SB 737-23-1299

E	11	C00839	COMMUNICATIONS HF 1

F/O Electrical System Panel, P6-1

Row	Col	Number	Name

HAP 038, 041-054, 102-999; HAP 037, 039, 040 POST SB 737-23-1299

C	3	C00166	COMMUNICATIONS VHF 2

HAP 048

D	2	C00857	COMMUNICATIONS HF 2

HAP 038, 041-054, 102-999; HAP 037, 039, 040 POST SB 737-23-1299

D. Related Data

HAP 038, 041-047, 049-054; HAP 037, 039, 040 POST SB 737-23-1299

(1) (SSM 23-11-11)

HAP 048

(2) (SSM 23-11-11, 23-11-21)

HAP 038, 041-054, 102-999; HAP 037, 039, 040 POST SB 737-23-1299

HAP 038, 041-047, 049-054; HAP 037, 039, 040 POST SB 737-23-1299

(3) (WDM 23-11-11)

HAP 048

(4) (WDM 23-11-11, 23-11-21)

HAP 038, 041-054, 102-999; HAP 037, 039, 040 POST SB 737-23-1299

E. Initial Evaluation

(1) Do this task: HF Communication System - BITE Procedure, 23-11 TASK 801.

BOEING PROPRIETARY - Copyright © Unpublished Work - See title page for details

HAP 038, 041-054; HAP 037, 039, 040 POST SB 737-23-1299

(a) If the maintenance message does not show on the front panel of the transceiver, then there was an intermittent fault.

NOTE: Low pressure in the HF coupler will cause the system to fail in flight (continues tune tone), but the system may function satisfactorily when the airplane is on the ground (when in the air in the coupler has warmed up).

HAP 038, 041-054, 102-999; HAP 037, 039, 040 POST SB 737-23-1299

(b) If the maintenance message shows on the front panel of the transceiver, then continue.

F. Fault Isolation Procedure

WARNING: DO NOT OPERATE THE HF SYSTEM WHILE THE AIRPLANE IS REFUELED OR DEFUELED. AN EXPLOSION CAN CAUSE INJURIES TO PERSONNEL AND DAMAGE TO THE AIRPLANE.

WARNING: MAKE SURE THAT PERSONNEL STAY A MINIMUM OF 6 FEET AWAY FROM THE VERTICAL STABILIZER WHEN THE HF SYSTEM TRANSMITS. RF ENERGY FROM THE HF ANTENNA CAN CAUSE INJURIES TO PERSONNEL.

(1) Do not operate the HF system while a fuel operation is done on the airplane.

HAP 038, 041-047, 049-054; HAP 037, 039, 040 POST SB 737-23-1299

(2) Replace the HF transceiver, M226 (HF-1).

These are the tasks:

HF Transceiver - Removal, AMM TASK 23-11-21-000-801,

HF Transceiver - Installation, AMM TASK 23-11-21-400-801.

(a) Do this task: HF Communication System - BITE Procedure, 23-11 TASK 801.

1) If the maintenance message shows on the front panel of the transceiver, then continue.

HAP 048

(3) Replace the HF transceiver, M226 (HF-1) or M439 (HF-2).

These are the tasks:

HF Transceiver - Removal, AMM TASK 23-11-21-000-801,

HF Transceiver - Installation, AMM TASK 23-11-21-400-801.

(a) Do this task: HF Communication System - BITE Procedure, 23-11 TASK 801.

1) If the maintenance message does not show on the front panel of the transceiver, then you corrected the fault.

2) If the maintenance message shows on the front panel of the transceiver, then continue.

HAP 038, 041-054; HAP 037, 039, 040 POST SB 737-23-1299

HAP 038, 041-047, 049-054; HAP 037, 039, 040 POST SB 737-23-1299

(4) Replace the HF antenna coupler, M227 (HF-1).

These are the tasks:

HF Antenna Coupler - Removal, AMM TASK 23-11-61-000-801,

HF Antenna Coupler - Installation, AMM TASK 23-11-61-400-801.

(a) Do this task: HF Communication System - BITE Procedure, 23-11 TASK 801.

BOEING PROPRIETARY - Copyright © Unpublished Work - See title page for details

1) If the maintenance message does not show on the front panel of the transceiver, then you corrected the fault.
2) If the maintenance message shows on the front panel of the transceiver, then continue.

HAP 048

(5) Replace the HF antenna coupler, M227 (HF-1) or M440 (HF-2).

These are the tasks:

HF Antenna Coupler - Removal, AMM TASK 23-11-61-000-801,

HF Antenna Coupler - Installation, AMM TASK 23-11-61-400-801.

(a) Do this task: HF Communication System - BITE Procedure, 23-11 TASK 801.
1) If the maintenance message shows on the front panel of the transceiver, then continue.

HAP 038, 041-047, 049-054; HAP 037, 039, 040 POST SB 737-23-1299

(6) Do this check of the coaxial cable:

(a) Remove the HF transceiver, M226 (HF-1). To remove it, do this task: HF Transceiver - Removal, AMM TASK 23-11-21-000-801.

(b) Remove this access panel:

Number	Name/Location
322AL	Vertical Fin, Fixed Leading Edge

(c) Disconnect the coaxial cable connector, D337, at the HF antenna coupler, M227 (HF-1).

(d) Do a time domain reflectometry check of the coaxial cable between connector, D345B, at the HF transceiver, M226 (HF-1), and connector, D337, at the HF antenna coupler, M227 (HF-1) (WDM 23-11-11), do this task: Coaxial Cable Inspection, AMM TASK 20-10-72-210-801.

(e) Repair any problems that you find.

(f) Re-connect the coaxial cable connector, D337, at the HF antenna coupler, M227 (HF-1).

(g) Install this access panel:

Number	Name/Location
322AL	Vertical Fin, Fixed Leading Edge

(h) Re-install the HF transceiver, M226 (HF-1). To install it, do this task: HF Transceiver - Installation, AMM TASK 23-11-21-400-801.

(i) Make sure that these circuit breakers are closed:

CAPT Electrical System Panel, P18-2

Row	Col	Number	Name
D	11	C00165	COMMUNICATIONS VHF 1
E	11	C00839	COMMUNICATIONS HF 1

F/O Electrical System Panel, P6-1

Row	Col	Number	Name
C	3	C00166	COMMUNICATIONS VHF 2

(j) Do this task: HF Communication System - BITE Procedure, 23-11 TASK 801.
1) If the maintenance message shows on the front panel of the transceiver, then continue.

BOEING PROPRIETARY - Copyright © Unpublished Work - See title page for details

HAP 048

(7) Do this check of the coaxial cable:

(a) Remove the HF transceiver, M226 (HF-1) or M439 (HF-2). To remove it, do this task: HF Transceiver - Removal, AMM TASK 23-11-21-000-801.

(b) Remove the applicable access panels:

Number	Name/Location
322AL	Vertical Fin, Fixed Leading Edge
322AR	Vertical Fin, Fixed Leading Edge

NOTE: The HF-1 antenna coupler is installed on the left side of the vertical stabilizer. The HF-2 antenna coupler is installed on the right side of the vertical stabilizer.

(c) Disconnect the coaxial cable connector, D337 (HF-1) or D625 (HF-2), at the HF antenna coupler, M227 (HF-1) or M440 (HF-2).

(d) Do a time domain reflectometry check of the coaxial cable between connector, D345B (HF-1) or D623B (HF-2), at the HF transceiver, M226 (HF-1) or M439 (HF-2), and connector, D337 (HF-1) or D625 (HF-2), at the HF antenna coupler, M227 (HF-1) or M440 (HF-2) (WDM 23-11-11, -21), do this task: Coaxial Cable Inspection, AMM TASK 20-10-72-210-801.

(e) Repair any problems that you find.

(f) Re-connect the coaxial cable connector, D337 (HF-1) or D625 (HF-2), at the HF antenna coupler, M227 (HF-1) or M440 (HF-2).

(g) Install the applicable access panels:

Number	Name/Location
322AL	Vertical Fin, Fixed Leading Edge
322AR	Vertical Fin, Fixed Leading Edge

(h) Re-install the HF transceiver, M226 (HF-1) or M439 (HF-2). To install it, do this task: HF Transceiver - Installation, AMM TASK 23-11-21-400-801.

(i) Do this task: HF Communication System - BITE Procedure, 23-11 TASK 801.

1) If the maintenance message shows on the front panel of the transceiver, then continue.

HAP 038, 041-054, 102-999; HAP 037, 039, 040 POST SB 737-23-1299

(8) Do a check of the electrical bond of the HF antenna, do this task: HF Antenna - Electrical Bond Check, AMM TASK 23-11-51-760-801

(a) Do this task: HF Communication System - BITE Procedure, 23-11 TASK 801

1) If the maintenance message does not show on the front panel of the transceiver, then you corrected the fault.

END OF TASK

806. HF Communication System Receive/Transmit Problem - Fault Isolation

A. Description

(1) The HF communication system does not operate correctly.

BOEING PROPRIETARY - Copyright © Unpublished Work - See title page for details

HAP 038, 041-047, 049-054; HAP 037, 039, 040 POST SB 737-23-1299

(a) Poor reception and/or poor transmission at any or all audio control panel (ACP) locations for the HF-1 communication system.

HAP 048

(b) Poor reception and/or poor transmission at any or all audio control panel (ACP) locations for the HF-1 or HF-2 communication system.

HAP 038, 041-054, 102-999; HAP 037, 039, 040 POST SB 737-23-1299

(c) HF operation while the airplane is in flight is intermittent, but is satisfactory when the airplane is on the ground.

B. Possible Causes

(1) HF-1 transceiver, M226.

HAP 048

(2) HF-2 transceiver, M4396.

HAP 038, 041-054, 102-999; HAP 037, 039, 040 POST SB 737-23-1299

(3) HF-1 antenna coupler, M227.

HAP 048

(4) HF-2 antenna coupler, M440.

HAP 038, 041-054, 102-999; HAP 037, 039, 040 POST SB 737-23-1299

(5) HF antenna, M228.

(6) Radio tuning panel, P8-71 (RTP-1)

(7) Radio tuning panel, P8-72 (RTP-2)

(8) Radio tuning panel, P8-72 (RTP-3)

(9) Audio control panel, P8-6 (captain's)

(10) Audio control panel, P8-7 (first officer's)

(11) Audio control panel, P8-6 (first observer's)

(12) Remote electronics unit, M1353 (REU).

(13) Wiring.

C. Circuit Breakers

(1) These are the primary circuit breakers related to the fault:

CAPT Electrical System Panel, P18-2

Row	Col	Number	Name
HAP 038, 041-054; HAP 037, 039, 040 POST SB 737-23-1299			
E	11	C00839	COMMUNICATIONS HF 1

F/O Electrical System Panel, P6-2

Row	Col	Number	Name
HAP 038, 041-054, 102-999; HAP 037, 039, 040 POST SB 737-23-1299			
C	21	C00560	INTERPHONE POWER F/O DC 2
C	22	C00561	INTERPHONE POWER F/O BAT
C	23	C00239	INTERPHONE POWER CAPT DC 2
C	24	C00240	INTERPHONE POWER CAPT BAT
D	21	C00084	INTPH AND WARN

BOEING PROPRIETARY - Copyright © Unpublished Work - See title page for details

Row	Col	Number	Name
D	22	C00086	AUDIO F/O
D	23	C00083	AUDIO CAPT
D	24	C00085	AUDIO OBS

D. Related Data

(1) (SSM 23-11-11)

HAP 048

(2) (SSM 23-11-21

HAP 038, 041-054, 102-999; HAP 037, 039, 040 POST SB 737-23-1299

(3) WDM 23-11-11

HAP 048

(4) WDM 23-11-21

HAP 038, 041-054, 102-999; HAP 037, 039, 040 POST SB 737-23-1299

E. Initial Evaluation

WARNING: DO NOT OPERATE THE HF SYSTEM WHILE THE AIRPLANE IS REFUELED OR DEFUELED. AN EXPLOSION CAN CAUSE INJURIES TO PERSONNEL AND DAMAGE TO THE AIRPLANE.

WARNING: MAKE SURE THAT PERSONNEL STAY A MINIMUM OF 6 FEET AWAY FROM THE VERTICAL STABILIZER WHEN THE HF SYSTEM TRANSMITS. RF ENERGY FROM THE HF ANTENNA CAN CAUSE INJURIES TO PERSONNEL.

(1) Do not operate the HF system while a fuel operation is done on the airplane.

(2) Do this reception/transmission test of the HF communication system:

NOTE: HF communication can be degraded while the airplane is on the ground due to external interference or signal blockage. Before you identify a HF communication system fault, make sure you try to transmit and receive at several frequencies across the HF frequency band. Make sure the airplane is not in or near any large metal structures. In some cases, you can move the airplane to correct the problem.

(a) Connect a headset/boom microphone, M428 (captain's), to the boom microphone jack, D6027 (captain's).

(b) Do these steps at the audio control panel, P8-6 (captain's ACP):

HAP 038, 041-047, 049-054; HAP 037, 039, 040 POST SB 737-23-1299

1) Push and release the HF-1 switch.

a) Make sure that the switch light comes on.

HAP 048

2) Push and release the applicable HF-1 or HF-2 switch.

a) Make sure that the switch light comes on.

HAP 038, 041-047, 049-054; HAP 037, 039, 040 POST SB 737-23-1299

3) Push and release the HF-1 volume control.

a) Make sure that the volume control indicator light comes on.

HAP 048

4) Push and release the applicable HF-1 or HF-2 volume control.

BOEING PROPRIETARY - Copyright © Unpublished Work - See title page for details

a) Make sure that the volume control indicator light comes on.

HAP 038, 041-054, 102-999; HAP 037, 039, 040 POST SB 737-23-1299

5)

6) Set the volume control to the middle position.

7) Set the MASK/BOOM switch (if installed) to the BOOM position.

(c) Do these steps at the radio tuning panel, P8-71 (RTP-1):

HAP 038, 041-047, 049-054; HAP 037, 039, 040 POST SB 737-23-1299

1) Push the HF 1 switch light.

a) Make sure that the switch light comes on.

HAP 048

2) Push the applicable HF switch light (HF 1 or HF 2).

a) Make sure that the switch light comes on.

HAP 038, 041-054, 102-999; HAP 037, 039, 040 POST SB 737-23-1299

3) Push the AM switch light for AM or USB mode of operation.

a) Make sure the switch light is on for AM, or off for USB.

4) Turn the SENS control clockwise to the maximum position.

5) Set the STANDBY frequency window to an approved test frequency.

6) Push the display transfer switch.

a) Make sure the STANDBY frequency moves to the ACTIVE frequency window.

(d) Push and release the captain's push-to-talk (PTT) switch.

1) Make sure you hear a 1 kHz tune-in-progress tone in the headset.

NOTE: A continuous or pulsed tone indicates that the coupler is tuning to a new frequency. The coupler tune tone will sound no longer than 15 seconds. The average coupler tune time is approximately 2 to 4 seconds typical, 7 seconds maximum. A continous tone indicates a failed HF coupler and as long as this failure exists, it will be annunciated on the front of the HF transceiver.

NOTE: Some coupler types are able to tune quickly when previously used frequencies are selected (about 1 second), in which case the tune tone may be only a momentary beep or may not be audible. But at the first tuning after a cold start, the tune tone is always audible regardless of whether this frequency is stored (average 2 to 4 seconds, 7 seconds maximum).

NOTE: Data for the last 100 tuned frequencies is stored in memeory. When either HF antenna or HF transceiver is replaced, the frequency memory is reset.

(e) Do these steps to do a voice communication test with a radio tower operator:

1) Push and hold the PTT switch while you speak.

NOTE: If no audio sidetone is heard, the HF transceiver has failed and as long as this failure exists, it will be annunciated on the front of the HF transceiver.

a) Make sure you hear the sidetone in the headset while you speak.

b) Make sure the HF transceiver blower fan operates when you transmit.

BOEING PROPRIETARY - Copyright © Unpublished Work - See title page for details

c) Make sure the FAIL lights on the front panel of the HF transceiver are not on.

2) Release the PTT switch while you listen.

a) Make sure the quality of the transmitted and received voice is satisfactory.

b) Make sure the sound of the received voice decreases and increases when you turn the SENS control counterclockwise and clockwise on the RTP.

HAP 038, 041-047, 049-054; HAP 037, 039, 040 POST SB 737-23-1299

c) Make sure the sound of the received voice changes when you turn the HF-1 volume control on the ACP, P8-6 (captain's), with no change in voice quality.

HAP 048

d) Make sure the sound of the received voice changes when you turn the applicable HF-1 or HF-2 volume control on the ACP, P8-6 (captain's), with no change in voice quality.

HAP 038, 041-054, 102-999; HAP 037, 039, 040 POST SB 737-23-1299

(f) If more than one mode of operation (AM and USB) is available at your location, do this step:

1) Push the AM switch light to the other mode of operation and make a voice transmission.

HAP 038, 041-047, 049-054; HAP 037, 039, 040 POST SB 737-23-1299

(g) At each remaining ACP, set the HF-1 switch and make a voice transmission.

1) Make sure the quality of the transmitted and received voice is satisfactory.

2) Make sure the sound of the received voice changes when you turn the HF-1 volume control on the applicable ACP with no change in voice quality.

HAP 048

(h) At each remaining ACP, set the applicable HF-1 or HF-2 switch and make a voice transmission.

1) Make sure the quality of the transmitted and received voice is satisfactory.

2) Make sure the sound of the received voice changes when you turn the applicable HF-1 or HF-2 volume control on the applicable ACP with no change in voice quality.

HAP 038, 041-054, 102-999; HAP 037, 039, 040 POST SB 737-23-1299

(3) If the HF communication system operates satisfactorily, then there was an intermittent fault.

(4) If the HF communication system does not operate satisfactorily at one location, then do the Fault Isolation Procedure - Problem At One Location below.

(5) If the HF communication system does not operate satisfactorily at all locations, then do the Fault Isolation Procedure - Problem At All Locations below.

(6) If the HF communication system does not operate satisfactorily or is intermittent while in flight, but operates satisfactorily on the ground, do the Fault Isolation Procedure - Intermittent Operation In Flight, Ground Operation OK below.

F. Fault Isolation Procedure - Problem At One Location

(1) Replace the audio control panel, P8-6 (captain's ACP), P8-7 (first officer's ACP) or P5-15 (first observer's ACP).

These are the tasks:

Audio Control Panel Removal, AMM TASK 23-51-02-000-801,

Audio Control Panel Installation, AMM TASK 23-51-02-400-801.

(a) Do a voice communication test with a radio tower operator using the applicable ACP.

BOEING PROPRIETARY - Copyright © Unpublished Work - See title page for details

1) Make sure the quality of the transmitted and received voice is satisfactory.

(b) If the HF communication system operates satisfactorily, then you corrected the fault.

(c) If the HF communication system does not operate satisfactorily, then continue.

(2) Replace the remote electronics unit, M1353 (REU).

These are the tasks:

Remote Electronics Unit (REU) Removal, AMM TASK 23-51-01-000-801,

Remote Electronics Unit (REU) Installation, AMM TASK 23-51-01-000-802.

(a) Do a voice communication test with a radio tower operator using the applicable ACP.

1) Make sure the quality of the transmitted and received voice is satisfactory.

(b) If the HF communication system operates satisfactorily, then you corrected the fault.

G. Fault Isolation Procedure - Problem At All Locations

HAP 038, 041-047, 049-054; HAP 037, 039, 040 POST SB 737-23-1299

(1) Replace the HF transceiver, M226 (HF-1).

These are the tasks:

HF Transceiver - Removal, AMM TASK 23-11-21-000-801,

HF Transceiver - Installation, AMM TASK 23-11-21-400-801.

(a) Do this task: HF Communication System - BITE Procedure, 23-11 TASK 801.

(b) Do a voice communication test with a radio tower operator.

1) Make sure the quality of the transmitted and received voice is satisfactory.

(c) If the HF communication system operates satisfactorily, then you corrected the fault.

(d) If the HF communication system does not operate satisfactorily, then continue.

HAP 048

(2) Do this exchange check of the HF transceiver, M226 (HF-1) or M439 (HF-2):

(a) Put a tag that reads SUSPECT on the HF transceiver, M226 (HF-1) or M439 (HF-2), with poor reception or transmission.

(b) Put a tag that reads OK on the other HF transceiver, M226 (HF-1) or M439 (HF-2).

(c) Exchange the locations of the HF transceivers, M226 (HF-1) and M439 (HF-2).

These are the tasks:

HF Transceiver - Removal, AMM TASK 23-11-21-000-801,

HF Transceiver - Installation, AMM TASK 23-11-21-400-801.

(d) Do a BITE test of the HF transceivers, M226 (HF-1) and M439 (HF-2). To do the BITE test, do this task: HF Communication System - BITE Procedure, 23-11 TASK 801

(e) Do a voice communication test with a radio tower operator.

1) Make sure the quality of the transmitted and received voice is satisfactory.

(f) If the poor reception or transmission moves with the HF transceiver tagged SUSPECT, then do these steps:

1) Replace the HF transceiver, M226 (HF-1) or M439 (HF-2), tagged SUSPECT.

These are the tasks:

HF Transceiver - Removal, AMM TASK 23-11-21-000-801,

BOEING PROPRIETARY - Copyright © Unpublished Work - See title page for details

HAP 048 (Continued)

HF Transceiver - Installation, AMM TASK 23-11-21-400-801.

NOTE: If it is your airlines' policy, you must install the HF transceiver with the OK tag in its initial location.

2) Do a BITE test of the HF transceiver that replaced the HF transceiver tagged SUSPECT. To do the BITE test, do this task: HF Communication System - BITE Procedure, 23-11 TASK 801.

a) Do a voice communication test with a radio tower operator.

b) Make sure the quality of the transmitted and received voice is satisfactory.

3) If the HF communication system operates satisfactorily, then you corrected the fault.

4) Remove the tags from the HF transceivers, M226 (HF-1) and M439 (HF-2).

(g) If the poor reception or transmission goes away after you exchange the HF transceivers, M226 (HF-1) and M439 (HF-2), then do these steps to complete the task:

NOTE: There was an intermittent fault in either the equipment rack connector, D345B (HF-1) or D623B (HF-2), or in the HF transceiver, M226 (HF-1) or M439 (HF-2), with the SUSPECT tag.

1) If it is your airlines' policy, you must install the HF transceivers, M226 (HF-1) and M439 (HF-2), in their initial locations.

These are the tasks:

HF Transceiver - Removal, AMM TASK 23-11-21-000-801,

HF Transceiver - Installation, AMM TASK 23-11-21-400-801.

2) Remove the tags from the HF transceivers, M226 (HF-1) and M439 (HF-2).

(h) If the poor reception or transmission stays with the HF-1 or HF-2 communication system after you exchange the HF transceivers, M226 (HF-1) and M439 (HF-2), then do these steps and continue:

1) If it is your airlines' policy, you must install the HF transceivers, M226 (HF-1) and M439 (HF-2), in their initial locations.

These are the tasks:

HF Transceiver - Removal, AMM TASK 23-11-21-000-801,

HF Transceiver - Installation, AMM TASK 23-11-21-400-801.

2) Remove the tags from the HF transceivers, M226 (HF-1) and M439 (HF-2).

HAP 038, 041-054, 102-999; HAP 037, 039, 040 POST SB 737-23-1299

(3) Replace the radio tuning panel, P8-71 (RTP-1) or P8-72 (RTP-2).

These are the tasks:

Radio Tuning Panel (RTP) - Removal, AMM TASK 23-12-41-000-801,

Radio Tuning Panel (RTP) - Installation, AMM TASK 23-12-41-400-801.

(a) Do this task: HF Communication System - BITE Procedure, 23-11 TASK 801.

(b) Do a voice communication test with a radio tower operator.

1) Make sure the quality of the transmitted and received voice is satisfactory.

(c) If the HF communication system operates satisfactorily, then you corrected the fault.

(d) If the HF communication system does not operate satisfactorily, then continue.

BOEING PROPRIETARY - Copyright © Unpublished Work - See title page for details

(4) Replace the remote electronics unit, M1353 (REU).

These are the tasks:

Remote Electronics Unit (REU) Removal, AMM TASK 23-51-01-000-801,

Remote Electronics Unit (REU) Installation, AMM TASK 23-51-01-000-802.

(a) Do a voice communication test with a radio tower operator.

1) Make sure the quality of the transmitted and received voice is satisfactory.

(b) If the HF communication system operates satisfactorily, then you corrected the fault.

(c) If the HF communication system does not operate satisfactorily, then continue.

HAP 038, 041-047, 049-054; HAP 037, 039, 040 POST SB 737-23-1299

(5) Replace the HF antenna coupler, M227 (HF-1).

These are the tasks:

HF Antenna Coupler - Removal, AMM TASK 23-11-61-000-801,

HF Antenna Coupler - Installation, AMM TASK 23-11-61-400-801.

(a) Do this task: HF Communication System - BITE Procedure, 23-11 TASK 801.

(b) Do a voice communication test with a radio tower operator.

1) Make sure the quality of the transmitted and received voice is satisfactory.

(c) If the HF communication system operates satisfactorily, then you corrected the fault.

(d) If the HF communication system does not operate satisfactorily, then continue.

HAP 048

(6) Replace the HF antenna coupler, M227 (HF-1) or M440 (HF-2).

These are the tasks:

HF Antenna Coupler - Removal, AMM TASK 23-11-61-000-801,

HF Antenna Coupler - Installation, AMM TASK 23-11-61-400-801.

(a) Do this task: HF Communication System - BITE Procedure, 23-11 TASK 801.

(b) Do a voice communication test with a radio tower operator.

1) Make sure the quality of the transmitted and received voice is satisfactory.

(c) If the HF communication system operates satisfactorily, then you corrected the fault.

(d) If the HF communication system does not operate satisfactorily, then continue.

HAP 038, 041-047, 049-054; HAP 037, 039, 040 POST SB 737-23-1299

(7) Do this check of the coaxial cable:

(a) Remove the HF transceiver, M226 (HF-1). To remove it, do this task: HF Transceiver - Removal, AMM TASK 23-11-21-000-801.

(b) Remove this access panel:

Number	Name/Location
322AL	Vertical Fin, Fixed Leading Edge

(c) Disconnect the coaxial cable connector, D337, at the HF antenna coupler, M227 (HF-1).

(d) Do a time domain reflectometry check of the coaxial cable between connector, D345B, at the HF transceiver, M226 (HF-1), and connector, D337, at the HF antenna coupler, M227 (HF-1) (WDM 23-11-11), do this task: Coaxial Cable Inspection, AMM TASK 20-10-72-210-801.

BOEING PROPRIETARY - Copyright © Unpublished Work - See title page for details

(e) Repair any problems that you find.

(f) Re-connect the coaxial cable connector, D337, at the HF antenna coupler, M227 (HF-1).

(g) Install this access panel:

Number	Name/Location
322AL	Vertical Fin, Fixed Leading Edge

(h) Re-install the HF transceiver, M226 (HF-1). To install it, do this task: HF Transceiver - Installation, AMM TASK 23-11-21-400-801.

(i) Make sure that these circuit breakers are closed:

CAPT Electrical System Panel, P18-2

Row	Col	Number	Name
D	11	C00165	COMMUNICATIONS VHF 1
E	11	C00839	COMMUNICATIONS HF 1

F/O Electrical System Panel, P6-1

Row	Col	Number	Name
C	3	C00166	COMMUNICATIONS VHF 2

(j) Do this task: HF Communication System - BITE Procedure, 23-11 TASK 801.

(k) Do a voice communication test with a radio tower operator.

1) Make sure the quality of the transmitted and received voice is satisfactory.

(l) If the HF communication system operates satisfactorily, then you corrected the fault.

(m) If the HF communication system does not operate satisfactorily, then continue.

HAP 048

(8) Do this check of the coaxial cable:

(a) Remove the HF transceiver, M226 (HF-1) or M439 (HF-2). To remove it, do this task: HF Transceiver - Removal, AMM TASK 23-11-21-000-801.

(b) Remove the applicable access panel:

Number	Name/Location
322AL	Vertical Fin, Fixed Leading Edge

or open this access panel:

Number	Name/Location
322AR	Vertical Fin, Fixed Leading Edge

NOTE: The HF-1 antenna coupler is installed on the left side of the vertical stabilizer. The HF-2 antenna coupler is installed on the right side of the vertical stabilizer.

(c) Disconnect the coaxial cable connector, D337 (HF-1) or D625 (HF-2), at the HF antenna coupler, M227 (HF-1) or M440 (HF-2).

BOEING PROPRIETARY - Copyright © Unpublished Work - See title page for details

HAP 048 (Continued)

(d) Do a time domain reflectometry check of the coaxial cable between connector, D345B (HF-1) or D623B (HF-2), at the HF transceiver, M226 (HF-1) or M439 (HF-2), and connector, D337 (HF-1) or D625 (HF-2), at the HF antenna coupler, M227 (HF-1) or M440 (HF-2) (WDM 23-11-11, -21), do this task: Coaxial Cable Inspection, AMM TASK 20-10-72-210-801.

(e) Repair any problems that you find.

(f) Re-connect the coaxial cable connector, D337 (HF-1) or D625 (HF-2), at the HF antenna coupler, M227 (HF-1) or M440 (HF-2).

(g) Install the applicable access panel:

Number	Name/Location
322AL	Vertical Fin, Fixed Leading Edge

or close this access panel:

Number	Name/Location
322AR	Vertical Fin, Fixed Leading Edge

(h) Re-install the HF transceiver, M226 (HF-1) or M439 (HF-2). To install it, do this task: HF Transceiver - Installation, AMM TASK 23-11-21-400-801.

(i) Make sure that these circuit breakers are closed:

CAPT Electrical System Panel, P18-2

Row	Col	Number	Name
D	11	C00165	COMMUNICATIONS VHF 1
E	11	C00839	COMMUNICATIONS HF 1

F/O Electrical System Panel, P6-1

Row	Col	Number	Name
C	3	C00166	COMMUNICATIONS VHF 2
D	2	C00857	COMMUNICATIONS HF 2

(j) Do this task: HF Communication System - BITE Procedure, 23-11 TASK 801.

(k) Do a voice communication test with a radio tower operator.

1) Make sure the quality of the transmitted and received voice is satisfactory.

(l) If the HF communication system operates satisfactorily, then you corrected the fault.

(m) If the HF communication system does not operate satisfactorily, then continue.

HAP 038, 041-054, 102-999; HAP 037, 039, 040 POST SB 737-23-1299

(9) Do a check of the electrical bond of the HF antenna, do this task: HF Antenna - Electrical Bond Check, AMM TASK 23-11-51-760-801.

(a) Do this task: HF Communication System - BITE Procedure, 23-11 TASK 801.

(b) Do a voice communication test with a radio tower operator.

1) Make sure the quality of the transmitted and received voice is satisfactory.

(c) If the HF communication system operates satisfactorily, then you corrected the fault.

BOEING PROPRIETARY - Copyright © Unpublished Work - See title page for details

H. Fault Isolation Procedure - Intermittent Operation In Flight, Ground Operation OK below.

NOTE: This fault indicates that a HF antenna coupler has a pressurization leak. Make sure that the replacement HF coupler is fully pressurized with dry nitrogen in accordance with the applicable Component Maintenance Manual (CMM).

(1) Replace the applicable HF antenna coupler, M227 (HF-1) or M440 (HF-2).

These are the tasks:

HF Antenna Coupler - Removal, AMM TASK 23-11-61-000-801,

HF Antenna Coupler - Installation, AMM TASK 23-11-61-400-801.

(a) Do this task: HF Communication System - BITE Procedure, 23-11 TASK 801.

(b) Monitor HF system performance on subsequent flights.

(c) If the HF communication system operates satisfactorily while in flight, then you corrected the fault.

END OF TASK

BOEING PROPRIETARY - Copyright © Unpublished Work - See title page for details

801. VHF Communication Transceiver System - BITE Procedure

A. General

(1) You do the very high frequency (VHF) communication system BITE test at the front panel of the VHF communication transceiver.

(2) The No. 1 VHF communication transceiver is located on the E1-3 shelf and the No. 2 VHF communication transceiver is located on the E1-5 shelf in the main equipment center.

(3) The No. 3 VHF communication transceiver is located on the E3-3 shelf in the main equipment center.

(4) The VHF communication system BITE test does a self check for existing internal and external faults.

(a) Results of the BITE test are displayed on the LCD screen on the front panel of the VHF communication transceiver.

B. BITE Procedure

(1) Do these steps to do the BITE procedure for the VHF communication system:

(a) Push and release one of the two TEST switches on the front panel of the applicable VHF communication transceiver.

1) Make sure the LCD screen shows VHF DATA RADIO TEST IN PROGRESS.

(b) If the LCD screen shows VHF DATA RADIO TEST COMPLETE - NO FAILURES, then the BITE test passed.

(c) If the LCD screen shows VHF DATA RADIO TEST COMPLETE - FAILURES, then do these steps:

1) Push the right switch under the WHY? prompt.

2) If the LCD screen shows VHF DATA RADIO FAILED, then refer to the table at the end of this task to find the fault isolation task.

3) If the LCD screen shows VHF DATA RADIO OK - EXTERNAL FAILURES PRESENT, then do these steps:

a) Push the right switch under the MORE prompt.

NOTE: The LCD screen will show the first maintenance message. The LCD screen can show only one maintenance message at a time.

b) Push the right switch under the MORE prompt to view more maintenance messages if multiple maintenance messages exist.

NOTE: If you continue to push the MORE switch, you will see all of the maintenance messages that are present. You will return to the first maintenance message when you push the MORE switch after the last maintenance message.

c) Refer to the table at the end of this task to find the fault isolation task for the applicable maintenance messages.

d) Push the left switch under the RETURN prompt to return to the normal mode screen.

NOTE: If no switch is pushed for five minutes on the VHF transceiver while in self-test mode, the LCD screen will return to the normal mode screen automatically.

END OF TASK

BOEING PROPRIETARY - Copyright © Unpublished Work - See title page for details

LRU/SYSTEM	MAINTENANCE MESSAGE	GO TO FIM TASK
VHF XCVR	ANTENNA FAIL	Reference Not Currently Available
VHF XCVR	CONTROL FAIL	23-12 TASK 812
VHF XCVR	LRU STATUS	23-12 TASK 811
VHF XCVR	TUNING PORT B MISSING INPUT	23-12 TASK 812
VHF XCVR	VHF DATA RADIO FAILED	23-12 TASK 811

BOEING PROPRIETARY - Copyright © Unpublished Work - See title page for details

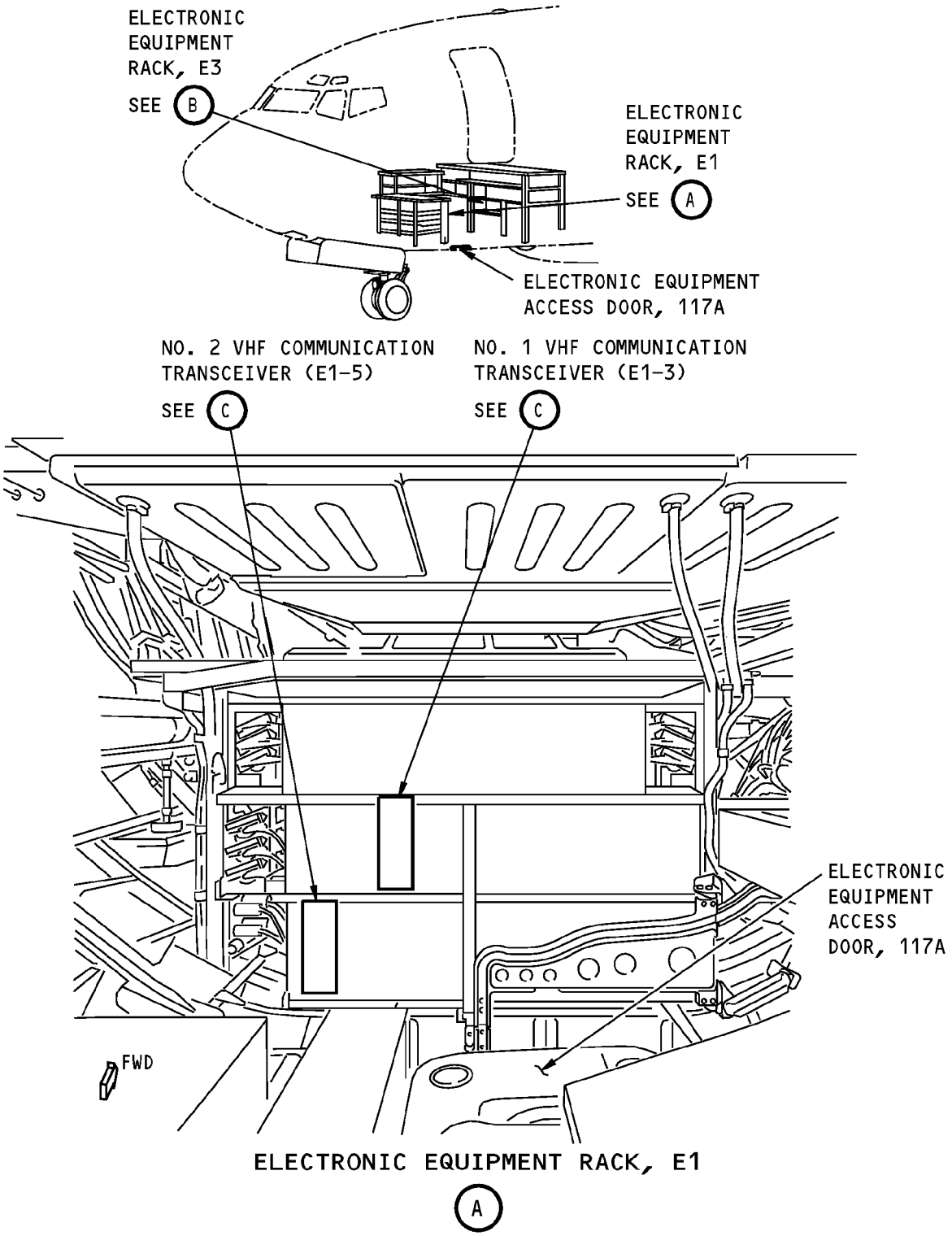

VHF Communication System Installation
Figure 201 (Sheet 1 of 2)/ 23-12-00-990-803

BOEING PROPRIETARY - Copyright © Unpublished Work - See title page for details

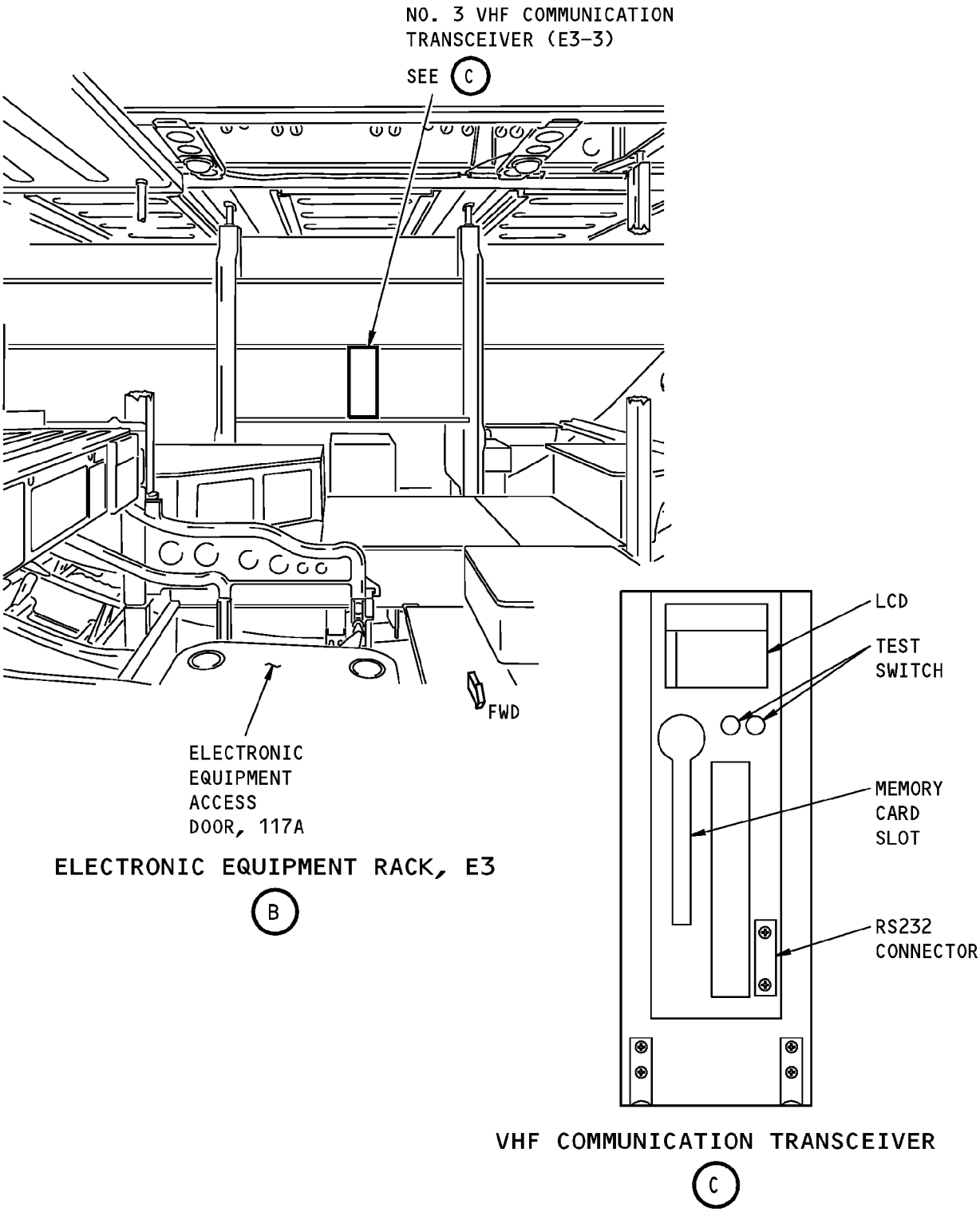

VHF Communication System Installation
Figure 201 (Sheet 2 of 2)/ 23-12-00-990-803

BOEING PROPRIETARY - Copyright © Unpublished Work - See title page for details

811. VHF Transceiver VHF DATA RADIO FAILED Problem - Fault Isolation

A. Description

(1) This task is for this maintenance message:

(a) VHF DATA RADIO FAILED

(2) The VHF communication transceiver has an internal fault.

B. Possible Causes

(1) VHF communication transceiver, M149 (VHF-1), M150 (VHF-2), or M411 (VHF-3).

C. Circuit Breakers

(1) These are the primary circuit breakers related to the fault:

CAPT Electrical System Panel, P18-2

Row	Col	Number	Name
D	11	C00165	COMMUNICATIONS VHF 1
D	12	C00471	COMMUNICATIONS VHF 3

F/O Electrical System Panel, P6-1

Row	Col	Number	Name
C	3	C00166	COMMUNICATIONS VHF 2

D. Related Data

(1) (SSM 23-12-11,-21, -31)

(2) (WDM 23-12-11,-21,-31)

E. Initial Evaluation

(1) Do this task: VHF Communication Transceiver System - BITE Procedure, 23-12 TASK 801.

(a) If VHF DATA RADIO FAILED does not show on the LCD screen of the transceiver, then there was an intermittent fault.

(b) If VHF DATA RADIO FAILED shows on the LCD screen of the transceiver, then continue.

F. Fault Isolation Procedure

(1) Replace the VHF communication transceiver, M149 (VHF-1), M150 (VHF-2), or M411 (VHF-3).

These are the tasks:

VHF Communication Transceiver - Removal, AMM TASK 23-12-21-020-801,

VHF Communication Transceiver - Installation, AMM TASK 23-12-21-420-801.

(a) Do this task: VHF Communication Transceiver System - BITE Procedure, 23-12 TASK 801.

1) If the red LRU STATUS LED is not on, on the front panel of the transceiver, then you corrected the fault.

END OF TASK

812. VHF Transceiver CONTROL Problem or TUNING PORT B MISSING INPUT Problem - Fault Isolation

A. Description

(1) This task is for these maintenance messages:

(a) TUNING PORT B - MISSING INPUT

BOEING PROPRIETARY - Copyright © Unpublished Work - See title page for details

HAP 001-013, 015-026, 028-037, 039-041, 047-050, 054, 101-999

(2) The VHF communication transceiver receives no input from the VHF communication control panel.

HAP 031-054, 101-999

(3) The VHF communication transceiver receives no input from the radio tuning panel.

HAP ALL

B. Possible Causes

HAP 001-013, 015-026, 028-037, 039-041, 047-050, 054, 101-999

(1) VHF communication control panel, P8-2 (VHF-1) or P8-3 (VHF-2)

HAP 031-054, 101-999

(2) Radio tuning panels (RTP): P8-71 (RTP-1), P8-72 (RTP-2), or P8-73 (RTP-3)

HAP ALL

(3) VHF communication transceiver, M149 (VHF-1), M150 (VHF-2), or M411 (VHF-3)

(4) Wiring problem

C. Circuit Breakers

(1) These are the primary circuit breakers related to the fault:

CAPT Electrical System Panel, P18-2

Row	Col	Number	Name
D	11	C00165	COMMUNICATIONS VHF 1
D	12	C00471	COMMUNICATIONS VHF 3

F/O Electrical System Panel, P6-1

Row	Col	Number	Name
C	3	C00166	COMMUNICATIONS VHF 2

D. Related Data

(1) (SSM 23-12-11,-21, -31)

(2) (WDM 23-12-11,-21,-31)

E. Initial Evaluation

(1) Do this task: VHF Communication Transceiver System - BITE Procedure, 23-12 TASK 801.

(a) If the maintenance message or fail light does not show on the transceiver, then there was an intermittent fault.

(b) If the maintenance message or fail light shows on the transceiver, then continue.

HAP 001-013, 015-026, 028-037, 039-041, 047-050, 054, 101-999

(2) Set the applicable VHF communication control panel to an approved test frequency.

(a) Make sure the STANDBY frequency display shows the set frequency.

(b) If the frequency is not shown, then do the Fault Isolation Procedure - Active Frequency Light Not On/Frequency Is Not Shown below.

(c) If the frequency is shown, then do the Fault Isolation Procedure - Active Frequency Light Is On/Frequency Is Shown below.

BOEING PROPRIETARY - Copyright © Unpublished Work - See title page for details

HAP 031-054, 101-999

(3) Set the radio tuning panels for the applicable VHF communication system.

(a) Set the STANDBY frequency to an approved test frequency.

(b) If the frequency is not shown, then do the Fault Isolation Procedure - Frequency Is Not Shown below.

(c) If the frequency is shown, then do the Fault Isolation Procedure - Frequency Is Shown below.

HAP 001-013, 015-026, 028-037, 039-041, 047-050, 054, 101-999

F. Fault Isolation Procedure - Active Frequency Light Not On

(1) Do this check for 28 VDC at the VHF control panel:

(a) Remove the VHF communication control panel, P8-2 (VHF-1) or P8-3 (VHF-2). To remove it, do this task: VHF Communication Control Panel - Removal, AMM TASK 23-12-31-000-801.

(b) Close these circuit breakers:

CAPT Electrical System Panel, P18-2

Row	Col	Number	Name
D	11	C00165	COMMUNICATIONS VHF 1
D	12	C00471	COMMUNICATIONS VHF 3

F/O Electrical System Panel, P6-1

Row	Col	Number	Name
C	3	C00166	COMMUNICATIONS VHF 2

(c) Do a check for 28V DC at pin 13 of connector, D203 (VHF-1) or D209 (VHF-2), to structure ground.

(d) Open these circuit breakers:

CAPT Electrical System Panel, P18-2

Row	Col	Number	Name
D	11	C00165	COMMUNICATIONS VHF 1
D	12	C00471	COMMUNICATIONS VHF 3

F/O Electrical System Panel, P6-1

Row	Col	Number	Name
C	3	C00166	COMMUNICATIONS VHF 2

(e) If there is 28V DC at pin 13 of connector, D203 (VHF-1) or D209 (VHF-2), then do these steps:

1) Install a new VHF communication control panel, P8-2 (VHF-1) or P8-3 (VHF-2). To install it, do this task: VHF Communication Control Panel - Installation, AMM TASK 23-12-31-400-801.

2) Do this task: VHF Communication Transceiver System - BITE Procedure, 23-12 TASK 801.

a) If the maintenance message does not show on the transceiver, then you corrected the fault.

(f) If there is not 28V DC at pin 13 of connector, D203 (VHF-1) or D209 (VHF-2), then continue.

BOEING PROPRIETARY - Copyright © Unpublished Work - See title page for details

(2) Do this check for 28 VDC at the circuit breaker.

(a) Do a check for 28V DC from the load terminal of VHF COMM 1 circuit breaker, C165, or VHF COMM 2 circuit breaker, C166, to structure ground.

(b) If there is not 28V DC at the load terminal of VHF COMM 1 circuit breaker, C165, or VHF COMM 2 circuit breaker, C166, then do these steps:

1) Replace the applicable circuit breaker, VHF COMM 1, C165, or VHF COMM 2, C166.

2) Re-install the communication control panel, P8-2 (VHF-1) or P8-3 (VHF-2). To install it, do this task: VHF Communication Control Panel - Installation, AMM TASK 23-12-31-400-801.

3) Do this task: VHF Communication Transceiver System - BITE Procedure, 23-12 TASK 801.

a) If the maintenance message does not show on the transceiver, then you corrected the fault.

(c) If there is 28V DC at the load terminal of VHF COMM 1 circuit breaker, C165, or VHF COMM 2 circuit breaker, C166, then do these steps:

1) Repair the wiring between pin 13 of connector, D203 (VHF-1) or D209 (VHF-2), at the VHF communication control panel, P8-2 (VHF-1) or P8-3 (VHF-2), to the load terminal of VHF COMM 1 circuit breaker, C165, or VHF COMM 2 circuit breaker, C166, at the circuit breaker panel, P18-1 (VHF-1) or P6-1 (VHF-2).

2) Re-install the VHF communication control panel, P8-2 (VHF-1) or P8-3 (VHF-2). To install it, do this task: VHF Communication Control Panel - Installation, AMM TASK 23-12-31-400-801.

3) Do this task: VHF Communication Transceiver System - BITE Procedure, 23-12 TASK 801.

a) If the maintenance message does not show on the transceiver, then you corrected the fault.

G. Fault Isolation Procedure - Active Frequency Light Is On or Frequency Is Shown

(1) Replace the VHF communications transceiver, M149 (VHF-1), M150 (VHF-2), or M411 (VHF-3).

These are the tasks:

VHF Communication Transceiver - Removal, AMM TASK 23-12-21-020-801,

VHF Communication Transceiver - Installation, AMM TASK 23-12-21-420-801.

(a) Do this task: VHF Communication Transceiver System - BITE Procedure, 23-12 TASK 801.

1) If the maintenance message does not show on the transceiver, then you corrected the fault.

2) If the maintenance message shows on the transceiver, then continue.

(2) Do this check of the wiring:

(a) Remove the VHF communication control panel, P8-2 (VHF-1) or P8-3 (VHF-2). To remove it, do this task: VHF Communication Control Panel - Removal, AMM TASK 23-12-31-000-801.

(b) Remove the VHF communication transceiver, M149 (VHF-1), M150 (VHF-2), or M411 (VHF-3). To remove it, do this task: VHF Communication Transceiver - Removal, AMM TASK 23-12-21-020-801.

BOEING PROPRIETARY - Copyright © Unpublished Work - See title page for details

(c) Do a wiring check between these pins of connector, D203 (VHF-1) or D209 (VHF-2), at the aft electronic panel, P8, and these pins of connector, D199B (VHF-1) or D201B (VHF-2), at the shelf, E1-3 (VHF-1) or E1-5 (VHF-2), in the electronic equipment compartment:

	VHF CNTRL PNL	
	PNL CONNECTOR	**XCVR CONNECTOR**
VHF-1 (P8-2)	**D203**	**D199B**
	pin 21 -	pin A7
	pin 22 -	pin B7
VHF-2 (P8-3)	**D209**	**D201B**
	pin 21 -	pin A7
	pin 22 -	pin B7

(d) If you find a problem with the wiring, then do these steps:

1) Repair the airplane wiring .

2) Re-install the VHF communication control panel, P8-2 (VHF-1) or P8-3 (VHF-2). To install it, do this task: VHF Communication Control Panel - Installation, AMM TASK 23-12-31-400-801.

3) Re-install the VHF communication transceiver, M149 (VHF-1), M150 (VHF-2), or M411 (VHF-3). To install it, do this task: VHF Communication Transceiver - Installation, AMM TASK 23-12-21-420-801.

4) Do this task: VHF Communication Transceiver System - BITE Procedure, 23-12 TASK 801.

a) If the maintenance message does not show on the transceiver, then you corrected the fault.

HAP 031-054, 101-999

H. Fault Isolation Procedure - Frequency Is Not Shown

(1) Replace the radio tuning panel (RTP), P8-71 (RTP-1), P8-72 (RTP-2), or P8-73 (RTP-3).

These are the tasks:

Radio Tuning Panel (RTP) - Removal, AMM TASK 23-12-41-000-801,

Radio Tuning Panel (RTP) - Installation, AMM TASK 23-12-41-400-801.

(a) Do this task: VHF Communication Transceiver System - BITE Procedure, 23-12 TASK 801.

1) If the maintenance message does not show on the transceiver, then you corrected the fault.

2) If the maintenance message shows on the transceiver, then continue.

(2) Do this check for 28 VDC at the RTP:

(a) Remove the RTP, P8-71 (RTP-1), P8-72 (RTP-2), or P8-73 (RTP-3). To remove it, do this task: Radio Tuning Panel (RTP) - Removal, AMM TASK 23-12-41-000-801.

BOEING PROPRIETARY - Copyright © Unpublished Work - See title page for details

(b) Remove the safety tags and close these circuit breakers:

CAPT Electrical System Panel, P18-2

Row	Col	Number	Name
D	11	C00165	COMMUNICATIONS VHF 1
D	12	C00471	COMMUNICATIONS VHF 3

F/O Electrical System Panel, P6-1

Row	Col	Number	Name
C	3	C00166	COMMUNICATIONS VHF 2

(c) Do a check for 28V DC at pin 40 of connector, D203 (RTP-1), D209 (RTP-2), or D549 (RTP-3) to structure ground.

1) If there is not 28V DC at pin 40 of connector D203 (RTP-1), D209 (RTP2), or D549 (RTP-3), then do this check for 28 VDC at the circuit breaker:

2) Do a check for 28V DC from the load terminal of VHF 1 circuit breaker, C165, VHF 2 circuit breaker, C166, or VHF 3 circuit breaker, C471, to structure ground.

3) If there is not 28V DC at the load terminal, then do these steps:

a) Replace the applicable circuit breaker, VHF 1, C165, VHF 2, C166, or VHF 3, C471.

b) Re-install the RTP. To install it, do this task: Radio Tuning Panel (RTP) - Installation, AMM TASK 23-12-41-400-801.

c) Do this task: VHF Communication Transceiver System - BITE Procedure, 23-12 TASK 801.

d) If the maintenance message does not show on the transceiver, then you corrected the fault.

I. Fault Isolation Procedure - Frequency Is Shown

(1) Replace the radio tuning panel (RTP), P8-71 (RTP-1) for VHF-1, P8-72 (RTP-2) for VHF-2, or P8-73 (RTP-3) for VHF-3.

These are the tasks:

Radio Tuning Panel (RTP) - Removal, AMM TASK 23-12-41-000-801,

Radio Tuning Panel (RTP) - Installation, AMM TASK 23-12-41-400-801.

(a) Do this task: VHF Communication Transceiver System - BITE Procedure, 23-12 TASK 801.

1) If the maintenance message does not show on the transceiver, then you corrected the fault.

2) If the maintenance message shows on the transceiver, then continue.

(2) Replace the VHF communications transceiver, M149 (VHF-1), M-150 (VHF-2), or M411 (VHF-3).

These are the tasks:

VHF Communication Transceiver - Removal, AMM TASK 23-12-21-020-801,

VHF Communication Transceiver - Installation, AMM TASK 23-12-21-420-801.

(a) Do this task: VHF Communication Transceiver System - BITE Procedure, 23-12 TASK 801.

BOEING PROPRIETARY - Copyright © Unpublished Work - See title page for details

1) If the maintenance message does not show on the transceiver, then you corrected the fault.
2) If the maintenance message shows on the transceiver, then continue.

(3) Do this check of the wiring:

(a) Remove the applicable VHF communication transceiver, M149 (VHF-1), M150 (VHF-2), or M411 (VHF-3). To remove it, do this task: VHF Communication Transceiver - Removal, AMM TASK 23-12-21-020-801.

(b) Remove the applicable radio tuning panels (see table below): P8-71 (RTP-1), P8-72 (RTP-2), or P8-73 (RTP-3). To remove them, do this task: Radio Tuning Panel (RTP) - Removal, AMM TASK 23-12-41-000-801.

(c) Do a wiring check between these pins of the applicable VHF communication transceiver in the electronic equipment compartment, and the specified RTPs at the aft electronic panel, P8, (WDM 23-12-11,-21,-31):

VHF COMM TRANSCEIVER	TRANS CONNECTOR		RTP CONNECTOR	RTP
VHF-1 (M149)	D199B		D203	RTP-1 (P8-71)
	pin A11	———	pin 2	
	pin B11	———	pin 3	
	D199B		D209	RTP-2 (P8-72)
	pin A7	———	pin 2	
	pin B7	———	pin 3	
VHF-2 (M150)	D201B		D203	RTP-1 (P8-71)
	pin A7	———	pin 2	
	pin B7	———	pin 3	
	D201B		D209	RTP-2 (P8-72)
	pin A11	———	pin 2	
	pin B11	———	pin 3	
VHF-3 (M411)	D539B		D549	RTP-3 (P8-73)
	pin A7	———	pin 2	
	pin B7	———	pin 3	

(d) If you find a problem with the wiring, then do these steps:

1) Repair the wiring.
2) Re-install the VHF communication transceiver. To install it, do this task: VHF Communication Transceiver - Installation, AMM TASK 23-12-21-420-801.
3) Re-install the RTPs. To install it, do this task: Radio Tuning Panel (RTP) - Installation, AMM TASK 23-12-41-400-801.
4) Do this task: VHF Communication Transceiver System - BITE Procedure, 23-12 TASK 801.
   a) If the maintenance message does not show on the transceiver, then you corrected the fault.

——————— END OF TASK ———————

BOEING PROPRIETARY - Copyright © Unpublished Work - See title page for details

HAP 001-013, 015-026, 028-037, 039-041, 047-050, 054, 101-999

814. VHF Communication Control Panel Problem - Fault Isolation

A. Description

(1) The VHF communication control panel does not operate correctly.

B. Possible Causes

(1) VHF communication control panel, P8-2 (VHF-1) or P8-3 (VHF-2).

(2) VHF communication transceiver, M149 (VHF-1), M150 (VHF-2), or M411 (VHF-3).

(3) Wiring problem.

C. Circuit Breakers

(1) These are the primary circuit breakers related to the fault:

CAPT Electrical System Panel, P18-2

Row	Col	Number	Name
D	11	C00165	COMMUNICATIONS VHF 1
D	12	C00471	COMMUNICATIONS VHF 3

F/O Electrical System Panel, P6-1

Row	Col	Number	Name
C	3	C00166	COMMUNICATIONS VHF 2

D. Related Data

(1) (SSM 23-12-11,-21, -31)

(2) (WDM 23-12-11,-21,-31)

E. Initial Evaluation

(1) Do this task: VHF Communication Transceiver System - BITE Procedure, 23-12 TASK 801.

(a) If there is a maintenance message shown on the front panel of the transceiver, then do the fault isolation procedure for the maintenance message.

(2) Do this reception/transmission test of the VHF communication system:

NOTE: VHF communication can be degraded while the airplane is on the ground due to external interference or signal blockage. Before you identify a VHF communication system fault, make sure you try to transmit and receive at several frequencies across the VHF frequency band. Make sure the airplane is not in or near any large metal structures. In some cases, you can move the airplane to correct the problem.

(a) Connect a headset/boom microphone, M428 (captain's), to the boom microphone jack, D6027 (captain's).

(b) Do these steps at the audio control panel, P8-6 (captain's ACP):

1) Push and release the applicable VHF-1 or VHF-2 switch.

a) Make sure the switch light comes on.

2) Push and release the applicable VHF-1 or VHF-2 volume control.

BOEING PROPRIETARY - Copyright © Unpublished Work - See title page for details

a) Make sure the volume control indicator light comes on.

3) Set the volume control to the middle position.

4) Set the MASK/BOOM switch (if installed) to the BOOM position.

(c) Do these steps at the VHF communication control panel, P8-2 (VHF-1) or P8-3 (VHF-2):

1) Use the freqency select knobs to set the STANDBY frequency display to an approved test frequency.

2) Push the TFR switch.

a) Make sure the number in the STANDBY frequency display moved to the ACTIVE frequency display.

(d) Do these steps to do a voice communication test with a radio tower operator:

1) Push and hold a push-to-talk (PTT) switch while you speak.

a) Make sure you hear the sidetone in the headset while you speak.

2) Release the PTT switch while you listen.

a) Make sure the quality of the transmitted and received voice is satisfactory.

b) Make sure the sound of the received voice changes when you turn the applicable VHF-1 or VHF-2 volume control on the ACP, P8-6 (captain's), with no change in voice quality.

(3) If the VHF communication control panel operates satisfactorily, then there was an intermittent fault.

(4) If the VHF communication control panel does not operate satisfactorily, then do the Fault Isolation Procedure below.

F. Fault Isolation Procedure

(1) Replace the VHF communication control panel, P8-2 (VHF-1) or P8-3 (VHF-2).

These are the tasks:

VHF Communication Control Panel - Removal, AMM TASK 23-12-31-000-801,

VHF Communication Control Panel - Installation, AMM TASK 23-12-31-400-801.

(a) Do this task: VHF Communication Transceiver System - BITE Procedure, 23-12 TASK 801.

(b) Do a voice communication test with a radio tower operator.

1) Make sure the quality of the transmitted and received voice is satisfactory.

(c) If the VHF communication control panel operates satisfactorily, then you corrected the fault.

(d) If the VHF communication control panel does not operate satisfactorily, then continue.

(2) Replace the VHF communication transceiver, M149 (VHF-1), M150 (VHF-2), or M411 (VHF-3).

These are the tasks:

VHF Communication Transceiver - Removal, AMM TASK 23-12-21-020-801,

VHF Communication Transceiver - Installation, AMM TASK 23-12-21-420-801.

(a) Do this task: VHF Communication Transceiver System - BITE Procedure, 23-12 TASK 801.

(b) Do a voice communication test with a radio tower operator.

BOEING PROPRIETARY - Copyright © Unpublished Work - See title page for details

1) Make sure the quality of the transmitted and received voice is satisfactory.

(c) If the VHF communication control panel operates satisfactorily, then you corrected the fault.

END OF TASK

HAP 031-054, 101-999

815. Radio Tuning Panel Problem - Fault Isolation

A. Description

(1) The radio tuning panel (RTP) does not operate correctly.

NOTE: INOP can be manually set or removed from some RTP displays. For instructions to set or remove INOP, refer to this task: Radio Tuning Panel - INOP Display Toggle (AMM TASK 23-12-41-800-802).

B. Possible Causes

(1) Radio tuning panel (RTP), P8-71 (RTP-1), P8-72 (RTP-2), or P8-73 (RTP-3).

(2) Wiring problem.

C. Circuit Breakers

(1) These are the primary circuit breakers related to the fault:

CAPT Electrical System Panel, P18-2

Row	Col	Number	Name
D	11	C00165	COMMUNICATIONS VHF 1
D	12	C00471	COMMUNICATIONS VHF 3
HAP 038, 041-054; HAP 037, 039, 040 POST SB 737-23-1299			
E	11	C00839	COMMUNICATIONS HF 1

F/O Electrical System Panel, P6-1

Row	Col	Number	Name
HAP 031-054, 101-999			
C	3	C00166	COMMUNICATIONS VHF 2
HAP 048			
D	2	C00857	COMMUNICATIONS HF 2
HAP 031-054, 101-999			

D. Related Data

(1) (SSM 23-12-11,-21, -31)

HAP 038, 041-047, 049-054; HAP 037, 039, 040 POST SB 737-23-1299

(2) (SSM 23-11-11)

HAP 048

(3) (SSM 23-11-11,-21)

HAP 031-054, 101-999

(4) (WDM 23-12-11,-21,-31)

BOEING PROPRIETARY - Copyright © Unpublished Work - See title page for details

HAP 031-054, 101-999 (Continued)

HAP 038, 041-047, 049-054; HAP 037, 039, 040 POST SB 737-23-1299

(5) (WDM 23-11-11)

HAP 048

(6) (WDM 23-11-11, -21)

HAP 031-054, 101-999

E. Initial Evaluation

(1) AIRPLANES WITH GABLES P/N G7404-XX RADIO TUNING PANELS;

Do these steps for a frequency lock-up problem:

(a) Push the VHF-1 switch on all the RTPs.

(b) Make sure that you can change the ACTIVE frequency for VHF-1 at each RTP.

1) Make sure that the ACTIVE frequencies at the other RTP(s) also change to the new frequency.

(c) If you can change the ACTIVE frequency at one RTP, but the other RTP(s) will not accept a frequency change, then do these steps:

1) Push the OFF switch on the RTP that operates satisfactorily.

a) Make sure the RTP is in the off condition.

2) Set the other RTP(s) to new ACTIVE frequencies to see if they will now accept a frequency change.

3) If the RTP(s) with the frequency lock-up problem now operate satisfactorily, then do the Fault Isolation Procedure - RTP Frequency Lock-up Problem below.

(2) Do this task: VHF Communication Transceiver System - BITE Procedure, 23-12 TASK 801.

(a) If there is a maintenance message shown on the front panel of the transceiver, then do the fault isolation procedure for the maintenance message.

HAP 038, 041-054; HAP 037, 039, 040 POST SB 737-23-1299

(3) Do this task: HF Communication System - BITE Procedure, 23-11 TASK 801.

(a) If there is a maintenance message shown on the front panel of the transceiver, then do the fault isolation procedure for the maintenance message.

WARNING: DO NOT OPERATE THE HF SYSTEM WHILE THE AIRPLANE IS REFUELED OR DEFUELED. THIS CAN CAUSE INJURY TO PERSONNEL AND DAMAGE TO EQUIPMENT.

WARNING: MAKE SURE PERSONNEL STAY A MINIMUM OF 6 FEET AWAY FROM THE VERTICAL STABILIZER WHEN THE HF SYSTEM TRANSMITS. RF ENERGY FROM THE HF ANTENNA CAN CAUSE INJURIES TO PERSONNEL.

(4) Do a VHF communication test (AMM TASK 23-12-00-730-801) and/or an HF communication test (AMM TASK 23-11-00-730-801) to confirm the problem.

(a) If the radio tuning panel (RTP) operates satisfactorily, then there was an intermittent fault.

(b) If the radio tuning panel (RTP) does not operate satisfactorily, then do the Fault Isolation Procedure - RTP Problem below.

HAP 031-054, 101-999

BOEING PROPRIETARY - Copyright © Unpublished Work - See title page for details

F. Fault Isolation Procedure - RTP Problem

(1) Replace the radio tuning panel (RTP), P8-71 (RTP-1), P8-72 (RTP-2), or P8-73 (RTP-3).

These are the tasks:

Radio Tuning Panel (RTP) - Removal, AMM TASK 23-12-41-000-801,

Radio Tuning Panel (RTP) - Installation, AMM TASK 23-12-41-400-801.

(a) Do this task: VHF Communication Transceiver System - BITE Procedure, 23-12 TASK 801.

HAP 038, 041-054, 102-999; HAP 037, 039, 040 POST SB 737-23-1299

(b) Do this task: HF Communication System - BITE Procedure, 23-11 TASK 801.

HAP 038, 041-054; HAP 037, 039, 040 POST SB 737-23-1299

(c) DO NOT OPERATE THE HF SYSTEM WHILE THE AIRPLANE IS REFUELED OR DEFUELED. THIS CAN CAUSE INJURY TO PERSONNEL AND DAMAGE TO EQUIPMENT.

WARNING: MAKE SURE PERSONNEL STAY A MINIMUM OF 6 FEET AWAY FROM THE VERTICAL STABILIZER WHEN THE HF SYSTEM TRANSMITS. RF ENERGY FROM THE HF ANTENNA CAN CAUSE INJURIES TO PERSONNEL.

(c) Do a VHF communication test and/or an HF communication test with a radio tower operator.

1) Make sure the quality of the transmitted and received voice is satisfactory.

HAP 031-054, 101-999

(d) If the radio tuning panel (RTP) operates satisfactorily, then you corrected the fault.

(e) If the radio tuning panel (RTP) does not operate satisfactorily, then continue.

(2) Do this check of the wiring:

(a) Remove the applicable radio tuning panel (RTP) (see table below). To remove it, do this task: Radio Tuning Panel (RTP) - Removal, AMM TASK 23-12-41-000-801.

HAP 038, 041-054; HAP 037, 039, 040 POST SB 737-23-1299

(b) Remove the applicable VHF or HF communication transceiver (see table below).

1) To remove the VHF communication transceiver, do this task: VHF Communication Transceiver - Removal, AMM TASK 23-12-21-020-801.

2) To remove the HF transceiver, do this task: HF Transceiver - Removal, AMM TASK 23-11-21-000-801.

HAP 031-054, 101-999

(c) Do a wiring check between these pins of the radio tuning panel (RTP) at the aft electronic panel, P8, and the applicable transceiver in the electronic equipment compartment (WDM 23-12-11,-21,-31) (WDM 23-11-11, -21):

BOEING PROPRIETARY - Copyright © Unpublished Work - See title page for details

Table 201

RADIO TUNING PANEL (RTP)	RTP CONNECTOR		XCVR CONNECTOR	TRANSCEIVER
RTP-1 (P8-71)	D203		D199B	VHF-1 (M149)
	pin 2	———	pin A11	
	pin 3	———	pin B11	
	pin 8	———	pin A7	
	pin 9	———	pin B7	
	D203		D345B	HF-1 (M226) (if installed)
	pin 2	———	pin E3	
	pin 3	———	pin F3	
	pin 8	———	pin G3	
	pin 9	———	pin H3	
	D203		D201B	VHF-2 (M150)
	pin 2	———	pin A7	
	pin 3	———	pin B7	
	pin 8	———	pin A11	
	pin 9	———	pin B11	
	D203		D623B	HF-2 (M439) (if installed)
	pin 2	———	pin G3	
	pin 3	———	pin H3	
	pin 8	———	pin E3	
	pin 9	———	pin F3	
	D203		D539B	VHF-3 (M411) (if installed)
	pin 5	———	pin A7	
	pin 6	———	pin B7	

BOEING PROPRIETARY - Copyright © Unpublished Work - See title page for details

HAP 031-054, 101-999 (Continued)

(Continued)

RADIO TUNING PANEL (RTP)	RTP CONNECTOR		XCVR CONNECTOR	TRANSCEIVER
RTP-2 (P8-72)	D209		D201B	VHF-2 (M150)
	pin 2	———	pin A11	
	pin 3	———	pin B11	
	pin 5	———	pin A7	
	pin 6	———	pin B7	
	D209		D623B	HF-2 (M439) (if installed)
	pin 2	———	pin E3	
	pin 3	———	pin F3	
	pin 5	———	pin G3	
	pin 6	———	pin H3	
	D209		D199B	VHF-1 (M149)
	pin 2	———	pin A7	
	pin 3	———	pin B7	
	pin 5	———	pin A11	
	pin 6	———	pin B11	
	D209		D345B	HF-1 (M226) (if installed)
	pin 2	———	pin G3	
	pin 3	———	pin H3	
	pin 5	———	pin E3	
	pin 6	———	pin F3	
	D209		D539B	VHF-3 (M411) (if installed)
	pin 8	———	pin A7	
	pin 9	———	pin B7	

BOEING PROPRIETARY - Copyright © Unpublished Work - See title page for details

HAP 031-054, 101-999 (Continued)

(Continued)

RADIO TUNING PANEL (RTP)	RTP CONNECTOR		XCVR CONNECTOR	TRANSCEIVER
RTP-3 (P8-73) (if installed)	D549		D539B	VHF-3 (M411) (if installed)
	pin 2	———	pin A7	
	pin 3	———	pin B7	
	D549		D623B	HF-2 (M439) (if installed)
	pin 5	———	pin E3	
	pin 6	———	pin F3	
	pin 8	———	pin G3	
	pin 9	———	pin H3	
	D549		D199B	VHF-1 (M149)
	pin 5	———	pin A7	
	pin 6	———	pin B7	
	pin 8	———	pin A11	
	pin 9	———	pin B11	
	D549		D345B	HF-1 (M226) (if installed)
	pin 5	———	pin G3	
	pin 6	———	pin H3	
	pin 8	———	pin E3	
	pin 9	———	pin F3	
	D549		D201B	VHF-2 (M150)
	pin 5	———	pin A11	
	pin 6	———	pin B11	
	pin 8	———	pin A7	
	pin 9	———	pin B7	

(d) Repair any airplane wiring problems you find.

(e) Re-install the applicable radio tuning panel (RTP). To install it, do this task: Radio Tuning Panel (RTP) - Installation, AMM TASK 23-12-41-400-801.

HAP 038, 041-054; HAP 037, 039, 040 POST SB 737-23-1299

(f) Re-install the applicable VHF or HF communication transceiver:

1) To install the VHF communication transceiver, do this task: VHF Communication Transceiver - Installation, AMM TASK 23-12-21-420-801.

2) To install the HF transceiver, do this task: HF Transceiver - Installation, AMM TASK 23-11-21-400-801.

HAP 031-054, 101-999

BOEING PROPRIETARY - Copyright © Unpublished Work - See title page for details

(g) Do this task: VHF Communication Transceiver System - BITE Procedure, 23-12 TASK 801.

HAP 038, 041-054; HAP 037, 039, 040 POST SB 737-23-1299

(h) Do this task: HF Communication System - BITE Procedure, 23-11 TASK 801.

WARNING: DO NOT OPERATE THE HF SYSTEM WHILE THE AIRPLANE IS REFUELED OR DEFUELED. THIS CAN CAUSE INJURY TO PERSONNEL AND DAMAGE TO EQUIPMENT.

WARNING: MAKE SURE PERSONNEL STAY A MINIMUM OF 6 FEET AWAY FROM THE VERTICAL STABILIZER WHEN THE HF SYSTEM TRANSMITS. RF ENERGY FROM THE HF ANTENNA CAN CAUSE INJURIES TO PERSONNEL.

(i) Do a VHF communication test and/or an HF communication test with a radio tower operator.

1) Make sure the quality of the transmitted and received voice is satisfactory.

HAP 031-054, 101-999

(j) If the radio tuning panel (RTP) operates satsifactorily, then you corrected the fault.

G. Fault Isolation Procedure - RTP Frequency Lock-up Problem

(1) Replace the radio tuning panel, P8-71 (RTP-1), P8-72 (RTP-2), or P8-73 (RTP-3), that you set to off in the Initial Evaluation.

NOTE: If an RTP has a cross-tuning failure, it may tune frequencies satisfactorily while it prevents other RTPs from tuning frequencies satisfactorily.

(a) Set each RTP to a new ACTIVE frequency to make sure that each RTP will accept a frequency change.

1) If the RTPs operate satisfactorily, then you corrected the fault.

2) If the RTPs do not operate satisfactorily, then continue the procedure.

(2) Do this check of the wiring:

(a) Remove the RTPs. To remove the RTPs, do this task: Radio Tuning Panel (RTP) - Removal, AMM TASK 23-12-41-000-801.

(b) Do a wiring check between these pins of RTP connectors D203, D209 and D549 at P8 (WDM 23-12-11,-21,-31 OR -41,):

D203 (RTP-1)		D209 (RTP-2)
pin 2	- - - - - - - - - - - - - - - - - - - -	pin 5
pin 3	- - - - - - - - - - - - - - - - - - - -	pin 6
pin 5	- - - - - - - - - - - - - - - - - - - -	pin 8
pin 6	- - - - - - - - - - - - - - - - - - - -	pin 9
pin 8	- - - - - - - - - - - - - - - - - - - -	pin 2
pin 9	- - - - - - - - - - - - - - - - - - - -	pin 3

BOEING PROPRIETARY - Copyright © Unpublished Work - See title page for details

HAP 031-054, 101-999 (Continued)

D203 (RTP-1)		D549 (RTP-3)
pin 2	- - - - - - - - - - - - - - - - - - - -	pin 8
pin 3	- - - - - - - - - - - - - - - - - - - -	pin 9
pin 5	- - - - - - - - - - - - - - - - - - - -	pin 2
pin 6	- - - - - - - - - - - - - - - - - - - -	pin 3
pin 8	- - - - - - - - - - - - - - - - - - - -	pin 5
pin 9	- - - - - - - - - - - - - - - - - - - -	pin 6

D209 (RTP-2)		D549 (RTP-3)
pin 2	- - - - - - - - - - - - - - - - - - - -	pin 5
pin 3	- - - - - - - - - - - - - - - - - - - -	pin 6
pin 5	- - - - - - - - - - - - - - - - - - - -	pin 8
pin 6	- - - - - - - - - - - - - - - - - - - -	pin 9
pin 8	- - - - - - - - - - - - - - - - - - - -	pin 2
pin 9	- - - - - - - - - - - - - - - - - - - -	pin 3

(c) If you find a problem with the wiring, then do these steps:

1) Repair the wiring.

(d) Install the RTPs. To install the RTPs, do this task: Radio Tuning Panel (RTP) - Installation, AMM TASK 23-12-41-400-801.

(e) Set each RTP to a new ACTIVE frequency to make sure that each RTP will accept a frequency change.

1) If the RTP operates satisfactorily, then you corrected the fault.

HAP ALL

——————— END OF TASK ———————

816. <u>VHF Communication System - Receive/Transmit Problem</u>

A. Description

(1) The VHF-1, VHF-2, or VHF-3 communication system does not operate correctly.

(2) Poor reception and/or poor transmission at the audio control panel, P8-6 (captain), P8-7 (first officer) or P5-15 (first observer) on the VHF-1, VHF-2, or VHF-3 communication system.

B. Possible Causes

(1) VHF communication transceiver, M149 (VHF-1), M150 (VHF-2), or M411 (VHF-3)

HAP 001-013, 015-026, 028-037, 039-041, 047-050, 054, 101-999

(2) VHF communication control panel, P8-2 (VHF-1) or P8-3 (VHF-2)

HAP 031-054, 101-999

(3) Radio tuning panels (RTP): P8-71 (RTP-1), P8-72 (RTP-2), or P8-73 (RTP-3)

HAP ALL

(4) Audio control panel, P8-6 (captain), P8-7 (first officer) or P5-15 (first observer)

(5) A push-to-talk (PTT) switch is stuck in transmit

(6) Remote electronics unit, M1353

(7) VHF communication antenna, M57 (VHF-1), M58 (VHF-2), or M225 (VHF-3)

BOEING PROPRIETARY - Copyright © Unpublished Work - See title page for details

(8) RF coaxial cable problem

(9) Wiring problem

C. Circuit Breakers

(1) These are the primary circuit breakers related to the fault:

CAPT Electrical System Panel, P18-2

Row	Col	Number	Name
D	11	C00165	COMMUNICATIONS VHF 1
D	12	C00471	COMMUNICATIONS VHF 3

F/O Electrical System Panel, P6-1

Row	Col	Number	Name
C	3	C00166	COMMUNICATIONS VHF 2

F/O Electrical System Panel, P6-2

Row	Col	Number	Name
C	21	C00560	INTERPHONE POWER F/O DC 2
C	22	C00561	INTERPHONE POWER F/O BAT
C	23	C00239	INTERPHONE POWER CAPT DC 2
C	24	C00240	INTERPHONE POWER CAPT BAT
D	22	C00086	AUDIO F/O
D	23	C00083	AUDIO CAPT
D	24	C00085	AUDIO OBS

D. Related Data

(1) (SSM 23-12-11,-21, -31)

(2) (SSM 23-51-11,-21,-31)

(3) (WDM 23-12-11,-21,-31)

(4) (WDM 23-51-11,-21,-31)

E. Initial Evaluation

(1) Make sure that none of the push-to-talk (PTT) switches are stuck in transmit (AMM TASK 23-51-00-710-801).

NOTE: A stuck PTT can be a cause of a temporary VHF transmit failure.

(a) Do these steps to do a fast check for a PTT that is stuck in transmit:

1) Set all the audio control panels to the Flight Interphone (or Interphone) transmit position.

2) Without pushing a PTT switch, speak into the microphones at the different crew stations.

3) If the station transmits, then it has a stuck PTT switch.

(2) Do a BITE test of the VHF communication transceivers. To do the BITE test, do this task: VHF Communication Transceiver System - BITE Procedure, 23-12 TASK 801.

(a) If the BITE test finds a fault, then do the fault isolation procedure for the maintenance message.

BOEING PROPRIETARY - Copyright © Unpublished Work - See title page for details

(3) Do this reception/transmission test of the VHF communication system:

NOTE: VHF communications can be degraded while the airplane is on the ground due to external interference or signal blockage. Before you identify a VHF communication system fault, make sure you try to transmit and receive at several frequencies across the VHF frequency band. Make sure the airplane is not in or near any large metal structures. In some cases, you can move the airplane to correct the problem.

(a) Use a boom microphone/headphone to do the test.

(b) At the audio control panel, P8-6 (captain), P8-7 (first officer) or P5-15 (first observer), do these steps:

1) Push and release the applicable microphone selector switch (VHF-1, VHF-2, or VHF-3).

a) Make sure the applicable switch light comes on.

2) Adjust the applicable volume control switch to the middle position.

3) Make sure the BOOM/MASKS switch is set to the BOOM position.

HAP 001-013, 015-026, 028-037, 039-041, 047-050, 054, 101-999

(c) At the VHF communication control panel, P8-2 (VHF-1), P8-3 (VHF-2), or P8-8 (VHF-3), do these steps:

1) Use the freqency select knobs to set the STANDBY frequency display to an approved test frequency.

2) Push the TFR switch.

a) Make sure the ACTIVE display shows the test frequency.

HAP 031-054, 101-999

(d) Set the radio tuning panel for the applicable VHF communication system.

1) Set the STANDBY frequency to an approved test frequency.

2) Push the transfer switch.

3) Make sure the STANDBY and ACTIVE frequencies are exchanged.

HAP ALL

(e) Do these steps to do a voice communication test with a radio operator:

1) Push and hold a push-to-talk (PTT) switch while you speak into the microphone.

a) Make sure you hear the sidetone in the headset while you speak.

2) Release the PTT switch while you listen.

a) Make sure the quality of the transmitted and received voice is satisfactory.

b) Make sure the volume of the received voice changes when you turn the volume control on the audio control panel, P8-6 (captain), P8-7 (first officer) or P5-15 (first observer) with no change in voice quality.

(4) If the VHF communication system operates satisfactorily, then there was an intermittent fault.

(5) If the VHF communication system does not operate satisfactorily, then do a reception/transmission test of the VHF communication system at each audio control panel.

(a) If the problem occurs at all audio control panels, then do Problem at All Audio Control Panels - Fault Isolation Procedure below.

(b) If the problem occurs at only one audio control panel, then do Problem at Only One Audio Control Panel - Fault Isolation Procedure below.

BOEING PROPRIETARY - Copyright © Unpublished Work - See title page for details

F. Problem at All Audio Control Panels - Fault Isolation Procedure

(1) Do this exchange check of the VHF communication transceiver, M149 (VHF-1), M150 (VHF-2) or M411 (VHF-3):

(a) Put a tag that reads SUSPECT on the VHF communication transceiver with poor reception or transmission.

(b) Put a tag that reads OK on the other VHF communication transceiver.

(c) Exchange the locations of the two VHF communication transceivers.

These are the tasks:

VHF Communication Transceiver - Removal, AMM TASK 23-12-21-020-801,

VHF Communication Transceiver - Installation, AMM TASK 23-12-21-420-801.

(d) Do a BITE test of each VHF communication transceiver. To do the BITE test, do this task: VHF Communication Transceiver System - BITE Procedure, 23-12 TASK 801.

(e) Speak with the radio operator on each VHF communication system.

1) Make sure the transmitted and received voice signals are satisfactory.

(f) If the poor reception or transmission moves with the VHF communication transceiver tagged SUSPECT, then do these steps:

1) Replace the VHF communication transceiver tagged SUSPECT.

These are the tasks:

VHF Communication Transceiver - Removal, AMM TASK 23-12-21-020-801,

VHF Communication Transceiver - Installation, AMM TASK 23-12-21-420-801.

NOTE: If it is your airlines' policy, you must install the VHF communication transceiver with the OK tag in its initial location.

2) Do a BITE test of the applicable VHF communication transceiver. To do the BITE test, do this task: VHF Communication Transceiver System - BITE Procedure, 23-12 TASK 801.

3) Speak with a radio operator on each VHF communication system.

a) Make sure the transmitted and received voice is satisfactory.

4) If the VHF communication system operates correctly, then you corrected the fault.

a) Remove the tags from the VHF communication transceivers.

(g) If the poor reception or transmission goes away after you exchange the VHF communication transceivers, then do these steps to complete the task:

NOTE: There was an intermittent fault in either the equipment rack connector, or in the VHF transceiver with the SUSPECT tag.

1) If it is your airlines' policy, you must install the VHF communication transceivers in their initial locations.

These are the tasks:

VHF Communication Transceiver - Removal, AMM TASK 23-12-21-020-801,

VHF Communication Transceiver - Installation, AMM TASK 23-12-21-420-801.

2) Remove the tags from the VHF communication transceivers.

(h) If the poor reception or transmission stays with the applicable communication system after you exchanged the VHF communication transceivers, then continue:

BOEING PROPRIETARY - Copyright © Unpublished Work - See title page for details

1) If it is your airlines' policy, you must install the VHF communication transceivers in their initial locations.

These are the tasks:

VHF Communication Transceiver - Removal, AMM TASK 23-12-21-020-801,

VHF Communication Transceiver - Installation, AMM TASK 23-12-21-420-801.

2) Remove the tags from the VHF communication transceivers.

HAP 001-013, 015-026, 028-037, 039-041, 047-050, 054, 101-999

(2) Do this exchange check of the VHF communication control panel, P8-2 (VHF-1) and P8-3 (VHF-2):

HAP 031-054, 101-999

(3) Do this exchange check of the radio tuning panels, P8-71 (RTP-1), P8-72 (RTP-2), or P8-73 (RTP-3):

HAP 031-037, 039-041, 047-050, 054, 101-999

(4) Do this exchange check of the VHF communication control panel, P8-2 (VHF-1) and P8-3 (VHF-2) or of the radio tuning panels, P8-71 (RTP-1), P8-72 (RTP-2), or P8-73 (RTP-3), as applicable:

HAP 031-054, 101-999

(5) Do this exchange check of the VHF communication control panel, P8-2 (VHF-1), P8-3 (VHF-2), or P5-51 (VHF-3) or of the radio tuning panels, P8-71 (RTP-1), P8-72 (RTP-2), or P8-73 (RTP-3), as applicable:

HAP ALL

(6) Do the following steps:

(a) Put a tag that reads SUSPECT on the panel that has the reception or transmission problem.

(b) Put a tag that reads OK on the other panel.

HAP 001-013, 015-026, 028-037, 039-041, 047-050, 054, 101-999

(c) Exchange the locations of the VHF communication control panels.

These are the tasks:

VHF Communication Control Panel - Removal, AMM TASK 23-12-31-000-801,

VHF Communication Control Panel - Installation, AMM TASK 23-12-31-400-801.

HAP 031-054, 101-999

(d) Exchange the locations of the radio tuning panels.

These are the tasks:

Radio Tuning Panel (RTP) - Removal, AMM TASK 23-12-41-000-801,

Radio Tuning Panel (RTP) - Installation, AMM TASK 23-12-41-400-801.

HAP ALL

(e) Do a BITE test of the VHF communication transceivers. To do the BITE test, do this task: VHF Communication Transceiver System - BITE Procedure, 23-12 TASK 801.

(f) Do a voice communication test with a radio operator on each VHF communication system.

1) Make sure the transmitted and received voice signals are satisfactory.

(g) If the fault moves with the panel tagged SUSPECT, then do these steps:

HAP 001-013, 015-026, 028-037, 039-041, 047-050, 054, 101-999

1) Replace the VHF communication control panel tagged SUSPECT.

These are the tasks:

BOEING PROPRIETARY - Copyright © Unpublished Work - See title page for details

VHF Communication Control Panel - Removal, AMM TASK 23-12-31-000-801,

VHF Communication Control Panel - Installation, AMM TASK 23-12-31-400-801.

NOTE: If it is your airlines' policy, you must install the VHF communication control panel with the OK tag in its initial location.

HAP 031-054, 101-999

2) Replace the radio tuning panel tagged SUSPECT.

These are the tasks:

Radio Tuning Panel (RTP) - Removal, AMM TASK 23-12-41-000-801,

Radio Tuning Panel (RTP) - Installation, AMM TASK 23-12-41-400-801.

NOTE: If it is your airlines' policy, you must install the radio tuning panel with the OK tag in its initial location.

HAP ALL

3) Do a BITE test of the applicable VHF communication transceiver. To do the BITE test, do this task: VHF Communication Transceiver System - BITE Procedure, 23-12 TASK 801.

4) Do a voice communication test on each VHF communication system.

a) Make sure the transmitted and received voice signals are satisfactory.

5) If the VHF communication system operates correctly, then you corrected the fault.

a) Remove the tags from the panels.

(h) If the fault goes away after you exchange the panels, then do these steps to complete the task:

NOTE: There was an intermittent fault in the panel connector, or in the panel tagged SUSPECT.

HAP 001-013, 015-026, 028-037, 039-041, 047-050, 054, 101-999

1) If it is your airlines' policy, you must install the VHF communication control panels in their initial locations.

These are the tasks:

VHF Communication Control Panel - Removal, AMM TASK 23-12-31-000-801,

VHF Communication Control Panel - Installation, AMM TASK 23-12-31-400-801.

HAP 031-054, 101-999

2) If it is your airlines' policy, you must install the radio tuning panels in their initial locations.

These are the tasks:

Radio Tuning Panel (RTP) - Removal, AMM TASK 23-12-41-000-801,

Radio Tuning Panel (RTP) - Installation, AMM TASK 23-12-41-400-801.

HAP ALL

3) Remove the tags from the panels.

(i) If the poor transmission or reception stays with the communication system after you exchange the panels, then continue the procedure.

BOEING PROPRIETARY - Copyright © Unpublished Work - See title page for details

HAP 001-013, 015-026, 028-037, 039-041, 047-050, 054, 101-999

1) If it is your airlines' policy, you must install the VHF communication control panels in their initial locations.

These are the tasks:

VHF Communication Control Panel - Removal, AMM TASK 23-12-31-000-801,

VHF Communication Control Panel - Installation, AMM TASK 23-12-31-400-801.

HAP 031-054, 101-999

2) If it is your airlines' policy, you must install the radio tuning panels in their initial locations.

These are the tasks:

Radio Tuning Panel (RTP) - Removal, AMM TASK 23-12-41-000-801,

Radio Tuning Panel (RTP) - Installation, AMM TASK 23-12-41-400-801.

HAP ALL

3) Remove the tags from the panels.

(7) Replace the remote electronics unit, M1353.

These are the tasks:

Remote Electronics Unit (REU) Removal, AMM TASK 23-51-01-000-801,

Remote Electronics Unit (REU) Installation, AMM TASK 23-51-01-000-802.

(a) Do a radio check with the radio operator on the applicable VHF communication system.

1) Make sure the transmitted and received voice is satisfactory.

(b) If the VHF communication system operates correctly, then you corrected the fault.

(c) If the VHF communication system does not operate correctly, then continue.

(8) Do this check of the VHF communication antenna, VHF-1, VHF-2 or VHF-3 and the RF coaxial cable:

(a) Remove the VHF communication transceiver, M149 (VHF-1), M150 (VHF-2), or M411 (VHF-3). To remove the VHF communication transceiver, do this task: VHF Communication Transceiver - Removal, AMM TASK 23-12-21-020-801.

(b) Do a check of the coaxial cable from the VHF communication transceiver, M149 (VHF-1), M150 (VHF-2), or M411 (VHF-3) to the VHF communication antenna, VHF-1, VHF-2, or VHF-3 (WDM 23-12-11,-21,-31). To do the TDR (time domain reflectometer) check, do this task: Coaxial Cable Inspection, AMM TASK 20-10-72-210-801.

(c) If you find a problem with the coaxial cable, then do this step:

1) Repair or replace the coaxial cable.

(d) If you find a problem with the VHF communication antenna, then do this step:

1) Replace the VHF communication antenna, VHF-1, VHF-2 or VHF-3.

These are the tasks:

VHF Communication Antenna - Removal, AMM TASK 23-12-11-000-801,

VHF Communication Antenna - Installation, AMM TASK 23-12-11-400-801.

(e) Re-install the VHF communication transceiver. To install the transceiver, do this task: VHF Communication Transceiver - Installation, AMM TASK 23-12-21-420-801.

(f) Do a BITE test of the VHF communication transceiver. To do the BITE test, do this task: VHF Communication Transceiver System - BITE Procedure, 23-12 TASK 801.

BOEING PROPRIETARY - Copyright © Unpublished Work - See title page for details

(g) Do a radio check with the radio operator on the applicable VHF communication system.

1) Make sure the transmitted and received voice is satisfactory.

(h) If the VHF communication system operates correctly, then you corrected the fault.

G. Problem at Only One Audio Control Panel - Fault Isolation Procedure

(1) Replace the applicable audio control panel, P8-6 (captain), P8-7 (first officer) or P5-15 (first observer).

These are the tasks:

Audio Control Panel Removal, AMM TASK 23-51-02-000-801,

Audio Control Panel Installation, AMM TASK 23-51-02-400-801.

(a) Do a radio check with the radio operator on the applicable VHF communication system.

1) Make sure the transmitted and received voice is satisfactory.

(b) If the VHF communication system operates correctly, then you corrected the fault.

(c) If the VHF communication system does not operate correctly, then continue.

(2) Replace the remote electronics unit, M1353.

These are the tasks:

Remote Electronics Unit (REU) Removal, AMM TASK 23-51-01-000-801,

Remote Electronics Unit (REU) Installation, AMM TASK 23-51-01-000-802.

(a) Do a radio check with the radio operator on the applicable VHF communication system.

1) Make sure the transmitted and received voice is satisfactory.

(b) If the VHF communication system operates correctly, then you corrected the fault.

END OF TASK

BOEING PROPRIETARY - Copyright © Unpublished Work - See title page for details

801. Emergency Locator Transmitter (ELT) BITE Procedure

A. General

(1) You do the emergency locator transmitter (ELT) BITE procedure from the front panel of the ELT. The ELT is above an access panel in the aft passenger cabin ceiling.

HAP 001-013, 015-026, 028-030

(2) The ELT BITE test does an operational check of the emergency locator transmitter system. The LED on the ELT front panel will come on when the ELT detects a failure in the ELT 406 MHz transmitter, the antenna, the battery, or the G-switch loop. The LED can also come on to indicate that the interface to the navigation system is not connected.

HAP 031-054, 101-999

(3) The ELT BITE test does an operational check of the emergency locator transmitter system. The LED on the ELT front panel will come on when the ELT detects a failure in the ELT 406 MHz transmitter, the antenna, the battery, the G-switch loop or the ELT/NAV interface unit.

HAP ALL

B. BITE Procedure

(1) Do the BITE procedure for the ELT as follows (Figure 201):

(a) On the ELT front panel, put the ON/OFF switch to ON for less than 15 seconds.

HAP 001-013, 015-026, 028-030

(b) Make sure the light-emitting diode (LED) on the ELT comes on momentarily and then goes off after the switch is moved to OFF.

1) If the LED flashes after it goes off, then count the number of flashes.

NOTE: The number of flashes is the maintenance message for the fault.

a) If the LED flashes one time, three times, four times or seven times, there was a self-test failure.

NOTE: If the LED flashes five times, this is not a failure. It is an indication that the interface to the navigation system is not connected and the NIU/PPIU is not installed. Refer to WDM 23-24-11 to determine the airplane configuration.

b) Refer to the table at the end of this task to find the fault isolation task for the applicable maintenance message.

HAP 031-054, 101-999

(c) Make sure the light-emitting diode (LED) on the ELT comes on momentarily and then goes off after the switch is moved to OFF.

1) If the LED flashes after it goes off, then count the number of flashes.

NOTE: The number of flashes is the maintenance message for the fault.

a) If the LED flashes one time, three times, four times, five times or seven times, there was a self-test failure.

NOTE: If the LED flashes five times, this does not always indicate a self-test failure. It is possible that the interface is not connected to the navigation system that gives current latitude/longitude position updates. Make sure you see (WDM 23-24-11) to find the correct interface configuration before you troubleshoot a possible ELT/Navigation Data problem.

BOEING PROPRIETARY - Copyright © Unpublished Work - See title page for details

b) Refer to the table at the end of this task to find the fault isolation task for the applicable maintenance message.

HAP ALL

(d) When access to the ELT is no longer necessary, do this task: Lowered Ceiling Installation, AMM TASK 25-21-71-400-801.

—————— END OF TASK ——————

LRU/SYSTEM	MAINTENANCE MESSAGE	GO TO FIM TASK
ELT	LED flashes five times	23-24 TASK 806
ELT	LED flashes one time	23-24 TASK 802
ELT	LED flashes seven times	23-24 TASK 804
ELT	LED flashes three or four times	23-24 TASK 803

BOEING PROPRIETARY - Copyright © Unpublished Work - See title page for details

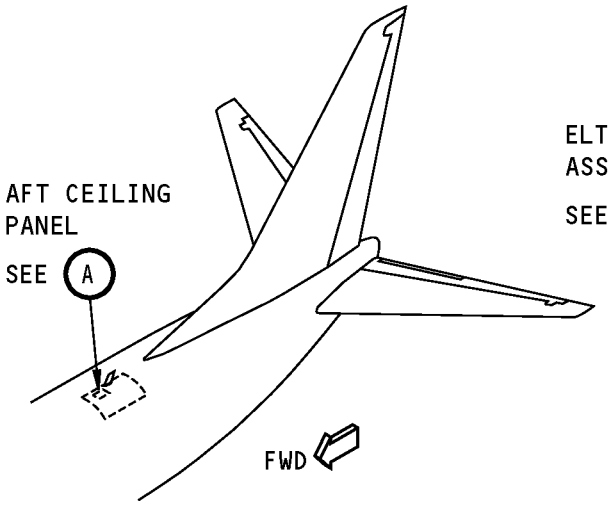

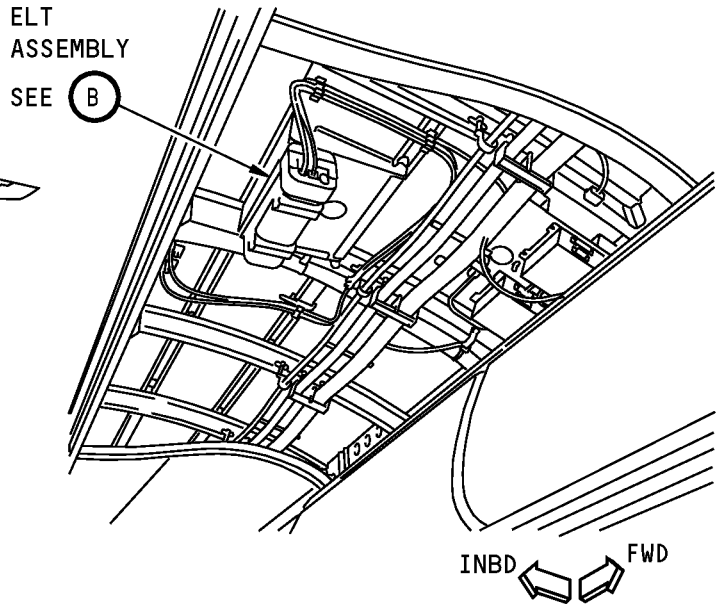

AFT CEILING PANEL
(REMOVED)

A

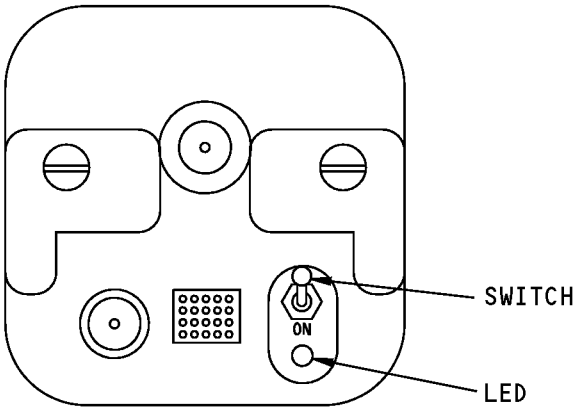

EMERGENCY LOCATOR
TRANSMITTER (ELT)

B

Emergency Locator Transmitter (ELT)
Figure 201 (Sheet 1 of 2)/ 23-24-00-990-803

BOEING PROPRIETARY - Copyright © Unpublished Work - See title page for details

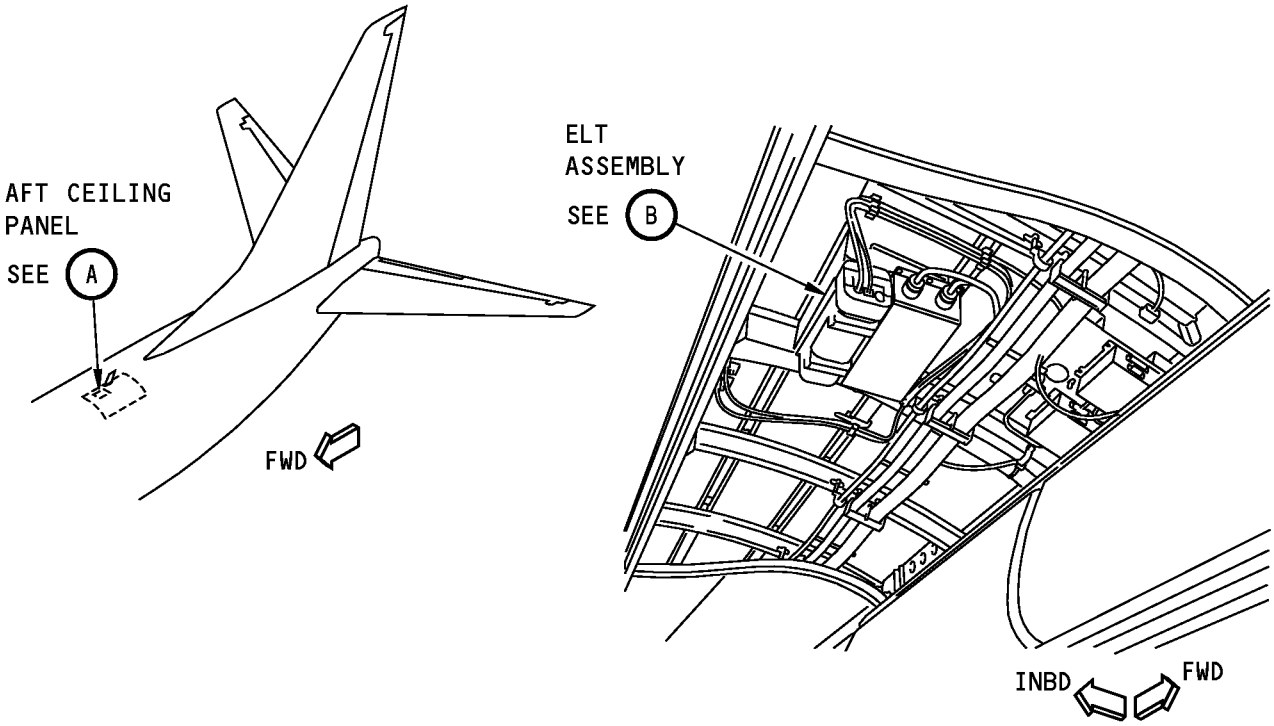

AFT CEILING PANEL
(REMOVED)

A

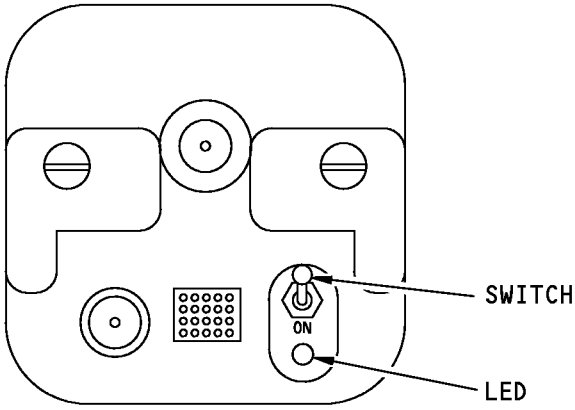

EMERGENCY LOCATOR
TRANSMITTER (ELT)

B

1757184 S0000317329_V1

Emergency Locator Transmitter (ELT)
Figure 201 (Sheet 2 of 2)/ 23-24-00-990-803

BOEING PROPRIETARY - Copyright © Unpublished Work - See title page for details

802. ELT G-Switch Loop Problem - Fault Isolation

A. Description

(1) This task is for the maintenance message:

(a) LED flashes one time.

(2) The ELT BITE test does an operational check of the emergency locator transmitter system. The LED on the ELT front panel will flash one time when the ELT detects a failure in the G-switch loop.

B. Possible Cause

(1) G-switch loop

C. Related Data

(1) (WDM 23-24-11)

(2) (SSM 23-24-11)

D. Initial Evaluation

(1) Do this task: ELT - Operational Test, AMM TASK 23-24-00-710-801-001.

(a) If there is one flash, then do the Fault Isolation Procedure below.

(b) If there is no flash, then there was an intermittent fault.

E. Fault Isolation Procedure

(1) Do this check of the G-switch loop on the emergency locator transmitter (ELT), M1523:

(a) Remove the bottom cover of the ELT (AMM TASK 23-24-00-000-801-001).

NOTE: The ELT is above an access panel in the aft passenger cabin ceiling.

(b) Make sure the G-switch loop that connects between pin 5 and pin 8 is installed correctly.

1) If the G-switch loop is missing or not intalled correctly, then install the G-switch loop.

(c) Re-install the bottom cover of the ELT.

(d) Do this task: ELT - Operational Test, AMM TASK 23-24-00-710-801-001.

(e) If there is no flash, then you corrected the fault.

END OF TASK

803. ELT 406 MHz Transmitter or Bad Antenna Problem - Fault Isolation

A. Description

(1) This task is for the maintenance message:

(a) LED flashes three or four times.

1) ELT Model B406-1: LED flashes four times

2) ELT Model B406-4: LED flashes three times

(2) The ELT BITE test does an operational check of the emergency locator transmitter system. The LED on the ELT front panel will flash three or four times when the ELT detects a failure in the ELT 406 MHz transmitter or the antenna.

B. Related Data

(1) (WDM 23-24-11)

(2) (SSM 23-24-11)

BOEING PROPRIETARY - Copyright © Unpublished Work - See title page for details

C. Possible Causes

(1) ELT

(2) ELT antenna

(3) Wiring

D. Equipment

(1) PE6029-50 or PE 6066-50 or equivalent (50 ohm resistor termination - TNC female, 0.5 watt minimum power dissipation), Pasternack Enterprises, LLC, P.O. Box 16759, Irvine, CA, 92623-6759

E. Initial Evaluation

(1) Do this task: ELT - Operational Test, AMM TASK 23-24-00-710-801-001.

(a) If there are three or four flashes, then do the Fault Isolation Procedure below.

(b) If there are no flashes, then there was an intermittent fault.

F. Fault Isolation Procedure

(1) Do this check of the emergency locator transmitter (ELT):

(a) Remove the bottom cover of the ELT (AMM TASK 23-24-00-000-801-001).

NOTE: The ELT is above an access panel in the aft passenger cabin ceiling.

(b) Disconnect coaxial cable connector D10585 from the antenna.

NOTE: The ELT antenna mounted on the top of the fuselage near the transmitter (STA 796.5, LBL 4.5).

(c) Connect 50 ohms resistor termination to the coaxial cable connector D10585.

NOTE: Terminator must be 50 ohm resistance, TNC female and minimum 0.5 watt power dissipation.

(d) Turn the ELT to the ON position for about one second, and then back to the OFF position.

1) If the flashes come on again, then do this step:

a) Replace the ELT.

These are the tasks:

Emergency Locator Transmitter - Removal, AMM TASK 23-24-00-000-801-001,

Emergency Locator Transmitter - Installation, AMM TASK 23-24-00-400-801-001.

b) Remove the 50 ohms resistor termination from connector D10585.

c) Connect coaxial cable connector D10585 to the antenna.

d) Do this task: ELT - Operational Test, AMM TASK 23-24-00-710-801-001.

e) If there are no flashes, then you corrected the fault.

2) If there are no flashes, then remove the 50 ohms resistor termination from coaxial cable connector D10585 and continue.

(2) Do this check of the wiring:

(a) Disconnect coaxial cable connector D10583 from the ELT.

(b) Do a check of the coaxial cable from connector D10583 to connector D10585. To do the check, do this task: Coaxial Cable Inspection, AMM TASK 20-10-72-210-801.

D10583		**D10585**
pin A1	- - - - - - - - - - - - - - - - - -	pin A1

BOEING PROPRIETARY - Copyright © Unpublished Work - See title page for details

(c) If you find a problem with the wiring, then do these steps:

1) Repair the wiring.
2) Re-connect the connector D10583.
3) Re-connect the connector D10585.
4) Install the bottom cover of the ELT.
5) Do this task: ELT - Operational Test, AMM TASK 23-24-00-710-801-001.
6) If there are no flashes, then you corrected the fault.

(d) If you do not find a problem with the wiring, then do these steps and continue:

1) Re-connect the connector D10583.
2) Re-connect the connector D10585.
3) Install the bottom cover of the ELT.
4) Do this task: ELT - Operational Test, AMM TASK 23-24-00-710-801-001.
5) If there are no flashes, then you corrected the fault.
6) If the flashes come on again, then continue.

(3) Replace the ELT antenna.

These are the tasks:

ELT Antenna - Removal, AMM TASK 23-24-02-000-801,

ELT Antenna - Installation, AMM TASK 23-24-02-400-801.

(a) If there are no flashes, then you corrected the fault.

END OF TASK

804. ELT Battery Problem - Fault Isolation

A. Description

(1) This task is for the maintenance message:

(a) LED flashes seven times.

(2) The ELT BITE test does an operational check of the emergency locator transmitter system. The LED on the ELT front panel will flash seven times when the ELT detects a failure in the battery.

B. Related Data

(1) (WDM 23-24-11)

(2) (SSM 23-24-11)

C. Possible Cause

(1) ELT battery

D. Initial Evaluation

(1) Do this task: ELT - Operational Test, AMM TASK 23-24-00-710-801-001.

(a) If there are seven flashes, then do the Fault Isolation Procedure below.

(b) If there are no flashes, then there was an intermittent fault.

E. Fault Isolation Procedure

(1) Replace the ELT battery assembly. To replace it, do this task: Emergency Locator Transmitter Battery - Replacement, AMM TASK 23-24-00-900-801-001.

BOEING PROPRIETARY - Copyright © Unpublished Work - See title page for details

(a) If there are no flashes, then you corrected the fault.

END OF TASK

HAP 031-054, 101-999

806. ELT/Navigation Data Problem - Fault Isolation

A. Description

(1) This task is for the maintenance message:

(a) LED flashes five times.

(2) The ELT BITE test does an operational check of the emergency locator transmitter system. The LED on the ELT front panel will flash five times when there is no navigation data. If the ELT/NAV Interface unit is not installed, the LED flashing five times is not a self-test fault. Also, if the ELT/NAV Interface unit (or PPIU) is installed but is not connected to the navigation system to provide current latitude/longitude position updates, this is not a fault. Please refer to WDM 23-24-11 to determine the airplane configuration.

B. Possible Cause

(1) No navigational data or invalid navigational from flight management computer (FMC) (if connected)

(2) ELT/NAV Interface Unit

(3) ELT

(4) Wiring

C. Related Data

(1) (WDM 23-24-11)

(2) (SSM 23-24-11)

D. Initial Evaluation

(1) If the ELT/NAV Interface unit (or PPIU) is not connected to the FMCS, then do the fault isolation procedure below.

E. Fault Isolation Procedure

(1) Do this check for 28V DC at the ELT/NAV interface unit:

(a) Open this circuit breaker and install safety tag:

F/O Electrical System Panel, P6-3

Row	Col	Number	Name
HAP 031-041, 044-054, 101-999			
C	1	C01495	ELT INTERFACE UNIT
HAP 031-054, 101-999			

(b) Disconnect connector D10717 on the ELT/NAV interface unit, M2114.

BOEING PROPRIETARY - Copyright © Unpublished Work - See title page for details

(c) Close this circuit breaker:

F/O Electrical System Panel, P6-3

Row	Col	Number	Name
HAP 031-041, 044-054, 101-999			
C	1	C01495	ELT INTERFACE UNIT
HAP 031-054, 101-999			

(d) Do a check for 28V DC at pin 1 of connector, D10717 to structure ground (WDM 23-24-11).

(e) If there is not 28V DC at pin 1 of connector, D10717, then do this check for the 28 V DC at the circuit breaker, C1495.

1) Do a check for 28V DC from the load terminal of ELT circuit breaker, C1495 to structure ground.

2) If there is not 28V DC at the load terminal of ELT circuit breaker, C1495, then do the steps that follow:

a) Replace the ELT circuit breaker, C1495.

b) Reconnect the connector, D10717.

c) Do this task: ELT - Operational Test, AMM TASK 23-24-00-710-801-001.

d) If there is no flash, then you corrected the fault.

e) If there are five flashes, then continue.

3) If there is 28V DC at the load terminal of ELT circuit breaker, C1495, then do the steps that follow:

a) Repair the wiring between pin 1 of the connector, D10717 to the load terminal of the ELT circuit breaker, C1495.

b) Reconnect the connector, D10717.

c) Do this task: ELT - Operational Test, AMM TASK 23-24-00-710-801-001.

d) If there is no flash, then you corrected the fault.

e) If there are five flashes, then continue.

(f) If there is 28V DC at pin 1 of the connector, D10717, then continue.

(2) Replace the ELT/Navigation Interface Unit, M2114.

These are the tasks:

ELT/Navigation Interface Unit - Removal, AMM TASK 23-24-00-020-801-001,

ELT/Navigation Interface Unit - Installation, AMM TASK 23-24-00-420-801-001.

(a) Do this task: ELT - Operational Test, AMM TASK 23-24-00-710-801-001.

1) If there is no flash, then you corrected the fault.

2) If there are five flashes, then continue.

(3) Replace the ELT, M1523.

These are the tasks:

Emergency Locator Transmitter - Removal, AMM TASK 23-24-00-000-801-001,

Emergency Locator Transmitter - Installation, AMM TASK 23-24-00-400-801-001.

(a) Do this task: ELT - Operational Test, AMM TASK 23-24-00-710-801-001.

BOEING PROPRIETARY - Copyright © Unpublished Work - See title page for details

1) If there is no flash, then you corrected the fault.

HAP ALL

END OF TASK

807. ELT On - Fault Isolation

A. Initial Evaluation

(1) Emergency locator transmitter is on. Hold the ELT ARM/ON switch on the overhead panel, P5, to the ON position for approximately 1 second AMM TASK 23-24-00-710-801-001.

(2) If the ELT ON does not show, then no maintenance action is necessary.

(3) If the ELT ON shows, then do the Fault Isolation Procedure below.

B. Fault Isolation Procedure

(1) Disconnect connector D3003 from the ELT, M1523.

(a) If the ELT ON does not show, then do the steps that follow:

1) Replace the ELT, M1523.

These are the tasks:

AMM TASK 23-24-00-000-801-001,

AMM TASK 23-24-00-400-801-001.

a) Make sure that connector D3003 is connected to the ELT, M1523.

b) If the ELT ON does not show, then you corrected the fault.

c) If the ELT ON shows, then continue the procedure.

2) Do a wiring check of the ELT ARM/ON switch on the ELT control panel, P5–80 (P5) WDM 23-24-11.

a) If you find a problem with the switch, then replace the switch.

These are the tasks:

AMM TASK 23-24-03-000-801, AMM TASK 23-24-03-400-801

b) If the ELT ON does not show, then you corrected the fault.

c) If the ELT ON shows, then continue the procedure.

3) Do a wiring check between the ELT ARM/ON switch on the ELT contol panel, P5–80 (P5) and the ELT, M1523 WDM 23-24-11.

a) Repair the problems that you find.

b) If the ELT ON does not show, then you corrected the fault.

END OF TASK

BOEING PROPRIETARY - Copyright © Unpublished Work - See title page for details

801. ACARS System Problem - Fault Isolation

HAP A. Description

HAP (1) The Aircraft Communications Addressing and Reporting System (ACARS) management unit
HAP does not operate correctly.

HAP (2) Use this procedure when one or more of these conditions exist:

HAP (a) The ACARS Observed Fault is ACARS: does not operate correctly.

HAP (b) The ACARS prompt does not show on the flight management computer system Control and
HAP Display Unit (CDU) MENU page.

HAP (c) The DATALINK FAIL message shows on the flight management computer system Control
HAP and Display Unit (CDU).

HAP B. Possible Causes

HAP **HAP 001-013, 015-026, 028-030**

HAP (1) ACARS Management Unit (MU), M1109 software

HAP **HAP 031-054, 101-999**

HAP (2) ACARS Communications Management Unit (CMU) 1, M2127 software.

HAP **HAP ALL**

HAP **HAP 001-013, 015-026, 028-030**

HAP (3) ACARS Management Unit (MU), M1109

HAP **HAP 031-054, 101-999**

HAP (4) ACARS Communications Management Unit (CMU) 1, M2127.

HAP **HAP ALL**

HAP (5) VHF Communication Transceiver No. 3, M411

HAP **HAP 006-013, 015-026, 028-030, 038, 042-046, 048, 051-053, 101-999**

HAP (6) VHF Communication Antenna No. 3, M225

HAP **HAP ALL**

HAP (7) Wiring problem

HAP C. Circuit Breakers

HAP (1) These are the primary circuit breakers related to the fault:

HAP F/O Electrical System Panel, P6-1

	Row	Col	Number	Name
HAP	**HAP 001-013, 015-026, 028-036**			
HAP	E	7	C00744	ACARS MU AC
HAP	**HAP 031-054, 101-999**			
HAP	E	8	C01483	CMU-1 AC
HAP	E	9	C01500	CMU/ACARS DC

HAP **HAP ALL**

HAP D. Related Data

HAP (1) (SSM 23-27-11) or (SSM 23-27-31)

HAP (2) (WDM 23-27-11) or (WDM 23-27-31) or (WDM 23-12-31)

BOEING PROPRIETARY - Copyright © Unpublished Work - See title page for details

HAP **HAP 031-054, 101-999**

HAP E. Initial Evaluation

HAP NOTE: This Initial Evaluation is for airplanes with an Allied Signal (Honeywell) ACARS CMU P/N
HAP 965-0758-00X connected to VHF No. 3 and controlled by MCDUs.

HAP (1) Do the ACARS CMU BITE Test:

HAP (a) Push and hold the TEST switch on the front of the ACARS CMU.

HAP (b) Make sure that all the lights on the front of the CMU are on.

HAP (c) Release the switch and wait at least one minute.

HAP (d) If the green XFER COMP light is on, make sure the system select switch on the data loader
HAP control panel (P61) is set to NORM or NORMAL.

HAP (e) If the HW FAIL, LOAD SW, XFER BUSY or XFER FAIL light is on, reload the correct ACARS
HAP software. To reload the software, do this task: ACARS Communications Management
HAP Unit Software Installation with an Airborne Data Loader (ADL), AMM
HAP TASK 23-27-33-470-802.

HAP NOTE: Incorrect or incomplete ACARS software can cause these lights to be on.

HAP (f) Make sure that only the Green MU PASS light is on.

HAP (g) If the ACARS CMU BITE Test is not satisfactory, do the Fault Isolation Procedure - ACARS
HAP Management Unit Problem below.

HAP (h) If the ACARS CMU BITE Test is satisfactory, then continue.

HAP (2) Do these steps to make sure the software is correct:

HAP NOTE: Make sure that you know the correct software part numbers for the ACARS CMU. For
HAP ACARS to be an approved installation, the correct software part numbers must be
HAP installed.

HAP (a) Push the MENU key on the left and right Control and Display Units (CDU-1 and CDU-2).

HAP (b) If the <ACARS prompt shows:

HAP 1) Push the line-select-key (LSK) adjacent to the <ACARS prompt.

HAP 2) Push the LSK adjacent to the <MISC prompt.

HAP 3) Push the LSK adjacent to the MAINT> prompt.

HAP 4) Push the LSK adjacent to the <PART NUMBERS prompt.

HAP a) Make sure that the ACARS PART NUMBERS page shows on the CDU.

HAP b) Make sure that the correct ACARS software part numbers show on the CDU.

HAP c) If the <ACARS software part numbers are not correct, do this task: ACARS
HAP Communications Management Unit Software Installation with an Airborne Data
HAP Loader (ADL), AMM TASK 23-27-33-470-802 or replace the ACARS CMU with one
HAP that has the correct software (AMM TASK 23-27-33-020-801) (AMM
HAP TASK 23-27-33-420-801).

HAP (c) Push the MENU function key on both CDUs.

HAP (3) Do the VHF Link Test subtask (23-27-00-730-082-009) contained in this task: ACARS - System
HAP Test, AMM TASK 23-27-00-700-812-009.

HAP (a) If the test is not satisfactory, do this task: NO COMM shows in the CDU display - Fault
HAP Isolation, 23-27 TASK 806.

HAP (b) If the test is satisfactory, then continue.

BOEING PROPRIETARY - Copyright © Unpublished Work - See title page for details

HAP 031-054, 101-999 (Continued)

HAP (4) Do the OOOI Sensor Test subtask (23-27-00-730-087-009) contained in this task: AMM
HAP TASK 23-27-00-700-812-009.

HAP (a) If the test is not satisfactory, do this task: An Out-Off-On-In (OOOI) value is not correct -
HAP Fault Isolation, 23-27 TASK 807

HAP (b) If the test is satisfactory, then you have corrected the fault.

HAP **HAP 001-013, 015-026, 028-030**

HAP F. Initial Evaluation

HAP (1) Look at the front panel of the ACARS MU, M1109.

HAP NOTE: The ACARS MU is on the E3-3 shelf in the electronic equipment bay.

HAP (2) Do a check of the ACARS front panel indications.

HAP (a) If the System test is satisfactory, then there was an intermittent fault.

HAP (b) Do the OOOI Sensor Test subtask (23-27-00-730-087-009) contained in this task: Reference
HAP Not Currently Available

HAP (c) If the System test is not satisfactory, then do the Fault Isolation Procedure - ACARS System
HAP Problem below.

HAP (d) If the test is satisfactory, then there was an intermittent fault.

HAP (3) If no lights are on, then do the Fault Isolation Procedure - ACARS System Problem below.

HAP **HAP ALL**

HAP G. Fault Isolation Procedure - ACARS Management Unit Problem

HAP **HAP 001-013, 015-026, 028-030**

HAP (1) Replace the ACARS management unit (MU), M1109.

HAP These are the tasks:

HAP ACARS Management Unit Removal, AMM TASK 23-27-32-020-801,

HAP ACARS Management Unit Installation, AMM TASK 23-27-32-420-801.

HAP (a) If the installation test for the ACARS MU is satisfactory, then you corrected the fault.

HAP **HAP 031-054, 101-999**

HAP (2) Replace the ACARS communications management unit (CMU) 1, M2127.

HAP These are the tasks:

HAP ACARS Communications Management Unit (CMU) Removal, AMM TASK 23-27-33-020-801,

HAP ACARS Communications Management Unit (CMU) Installation, AMM
HAP TASK 23-27-33-420-801.

HAP (a) If the installation test for the ACARS CMU is satisfactory, then you corrected the fault.

HAP **HAP ALL**

HAP H. Fault Isolation Procedure - ACARS System Problem

HAP **HAP 001-013, 015-026, 028-030**

HAP (1) Do this check of the wiring:

HAP (a) Remove the ACARS management unit, M1109. To remove it, do this task: ACARS
HAP Management Unit Removal, AMM TASK 23-27-32-020-801.

BOEING PROPRIETARY - Copyright © Unpublished Work - See title page for details

HAP (b) Close this circuit breaker:

HAP F/O Electrical System Panel, P6-1

Row	Col	Number	Name
E	7	C00744	ACARS MU AC

HAP (c) Do a check for 115 VAC between pins 1 and 7 of connector D1967C at the ACARS management unit, M1109.

HAP (d) If there is not 115 VAC between pins 1 and 7 of connector D1967C at the ACARS management unit, M1109, then do these steps:

HAP 1) Do a check for 115 VAC between the load terminal of ACARS MU AC circuit breaker, C744 and structure ground.

HAP 2) If there is not 115 VAC at the load terminal, then do these steps:

HAP a) Replace the applicable circuit breaker, C744 (WDM 23-27-11):

HAP a) This is the circuit breaker:

HAP F/O Electrical System Panel, P6-1

Row	Col	Number	Name
E	7	C00744	ACARS MU AC

HAP b) Do this task: Reference Not Currently Available.

HAP c) If the operational test is satisfactory, then you corrected the fault.

HAP 3) If there is 115 VAC at the load terminal, then continue.

HAP 4) Open this circuit breaker and install safety tag:

HAP F/O Electrical System Panel, P6-1

Row	Col	Number	Name
E	7	C00744	ACARS MU AC

HAP 5) Do a wiring check between these pins of connector D40218P at circuit breaker C744 and connector D1967C at the ACARS management unit, M1109 (WDM 23-27-11):

D40218P		**D1967C**
pin 7	- - - - - - - - - - - - - - - - - - -	pin 1

HAP 6) If you find a problem with the wiring, then do these steps:

HAP a) Repair the wiring.

HAP b) Re-connect connector D40218P.

HAP c) Re-install the ACARS management unit, M1109. To install it, do this task: ACARS Management Unit Installation, AMM TASK 23-27-32-420-801.

HAP d) If the installation test for the ACARS MU is satisfactory, then you corrected the fault.

HAP (e) If there is 115 VAC between pins 1 and 7 of connector D1967C at the ACARS management unit, M1109, then continue.

HAP (2) Install a new ACARS management unit, M1109. To install it, do this task: ACARS Management Unit Installation, AMM TASK 23-27-32-420-801.

HAP (a) If the installation test for the ACARS MU is satisfactory, then you corrected the fault.

BOEING PROPRIETARY - Copyright © Unpublished Work - See title page for details

HAP 001-013, 015-026, 028-030 (Continued)

HAP 031-054, 101-999

(3) Do this check of the wiring:

(a) Remove the ACARS communications management unit (CMU). To remove it, do this task: ACARS Communications Management Unit (CMU) Removal, AMM TASK 23-27-33-020-801.

(b) Close this circuit breaker:

F/O Electrical System Panel, P6-1

Row	Col	Number	Name
E	8	C01483	CMU-1 AC

(c) Do a check for 115 VAC between pins 1 and 7 of connector D10727C at the ACARS CMU 1, M2127.

NOTE: The ACARS CMU 1 is on the E4-1 shelf.

(d) If there is not 115 VAC between pins 1 and 7 of connector D10727C at the ACARS CMU 1, M2127, then do these steps:

(e) Do a check for 115 VAC between the load terminal of CMU 1 AC circuit breaker, C1483 and structure ground.

(f) If there is not 115 VAC at the load terminal, then do these steps:

1) Replace the applicable circuit breaker, C1483 (WDM 23-27-31).

a) Do this task: ACARS - Operational Test, AMM TASK 23-27-00-740-814-009.

b) If the operational test is satisfactory, then you corrected the fault.

2) If there is 115 VAC at the load terminal, then continue.

3) Open this circuit breaker and install safety tag:

F/O Electrical System Panel, P6-1

Row	Col	Number	Name
E	8	C01483	CMU-1 AC

4) Do a wiring check between these pins of connector D40218P at circuit breaker C1483 and connector D10727C at the ACARS CMU 1, M2127 (WDM 23-27-31):

D40218P		**D10727C**
pin 2	- - - - - - - - - - - - - - - - - -	pin 1

5) If you find a problem with the wiring, then do these steps:

a) Repair the wiring.

b) Re-connect connector D40218P.

c) Re-install the ACARS communications management unit. To install it, do this task: ACARS Communications Management Unit (CMU) Installation, AMM TASK 23-27-33-420-801.

d) If the installation test for the ACARS CMU is satisfactory, then you corrected the fault.

(g) If there is 115 VAC between pins 1 and 7 of connector D10727C at the ACARS CMU 1, then continue.

(4) Install a new ACARS communications management unit. To install it, do this task: ACARS Communications Management Unit (CMU) Installation, AMM TASK 23-27-33-420-801.

BOEING PROPRIETARY - Copyright © Unpublished Work - See title page for details

HAP (a) If the installation test for the ACARS CMU is satisfactory, then you corrected the fault.

END OF TASK

HAP **806. NO COMM shows in the CDU display - Fault Isolation**

HAP A. Description

HAP (1) A NO COMM message shows on the flight management computer system Control and Display
HAP Unit (CDU).

HAP B. Possible Causes

HAP (1) Communications Management Unit (CMU), M2127 or M2128 software

HAP (2) Communications Management Unit (CMU), M2127 or M2128

HAP (3) VHF Communication Transceiver No. 3, M411

HAP (4) VHF Communication Antenna No. 3, M225

HAP (5) Wiring problem

HAP C. Circuit Breakers

HAP (1) These are the primary circuit breakers related to the fault:

HAP F/O Electrical System Panel, P6-1

	Row	Col	Number	Name
HAP	**HAP 031-036**			
HAP	E	7	C00744	ACARS MU AC
HAP	**HAP 031-054, 101-999**			
HAP	E	8	C01483	CMU-1 AC
HAP	E	9	C01500	CMU/ACARS DC

HAP D. Related Data

HAP (1) (SSM 23-27-11) or (SSM 23-27-31)

HAP (2) (WDM 23-27-11) or (WDM 23-27-31)

HAP E. Initial Evaluation

HAP (1) Push the MENU key on the left and right Control and Display Units (CDU-1 and CDU-2).

HAP (a) Do the VHF Link Test subtask (23-27-00-730-082-009) contained in this task: ACARS -
HAP System Test, AMM TASK 23-27-00-700-812-009

HAP 1) If the test is satisfactory, there was an intermittent fault.

HAP 2) If the test is not satisfactory, do this task: ACARS - Operational Test, AMM
HAP TASK 23-27-00-740-814-009

HAP a) If the ACARS Operational test is not satisfactory, do the Fault Isolation Procedure -
HAP ACARS Management Unit Problem below.

HAP b) If the ACARS Operational test was satisfactory, then do the Fault Isolation
HAP Procedure - NO COMM Message below.

HAP F. Fault Isolation Procedure - NO COMM Message

HAP (1) Push the MENU key on the left or right Control and Display Unit (CDU-1 or CDU-2).

HAP (a) Push the line select key (LSK) adjacent to the <ACARS prompt.

HAP (b) Push the LSK adjacent to the <MISC prompt.

BOEING PROPRIETARY - Copyright © Unpublished Work - See title page for details

HAP (c) Push the LSK adjacent to the <FREQUENCY prompt.

HAP (d) Look at the frequency that shows under the ACARS DATA FREQ prompt.

HAP 1) If the letter M is in front of the frequency, push the LSK adjacent to the AUTOMATIC> prompt.

HAP (e) Make sure ACARS has selected the correct frequency.

HAP (f) Make sure the airplane is within range of the ground station. Also, the VHF antenna must have a clear view to the station tower.

NOTE: It may be necessary to move the airplane to a different location for a clear view to the station tower.

NOTE: For the ACARS system to operate correctly, it must be linked to an ACARS ground station. The ACARS ground station must be operational.

HAP (2) Do the VHF Link Test subtask (23-27-00-730-082-009) contained in this task: ACARS - System Test, AMM TASK 23-27-00-700-812-009

HAP (3) If the VHF Link test is satisfactory, then you corrected the fault.

HAP (4) If the VHF Link test is not satisfactory, then do these steps:

HAP (a) Review the message received by the ACARS ground station from the airplane.

HAP 1) If the ACARS ground station received the message sent from the airplane, ACARS and the VHF system are transmitting correctly. Make sure the airplane is in the ground station data base.

NOTE: If the airplane is not in the ground station data base, the message will not be acknowledged.

HAP 2) If the ACARS ground station did not receive the message, then continue.

HAP (5) Do this exchange of the VHF Communication Transceiver No. 2, M150 and VHF No. 3, M411:

HAP (a) Put a tag that reads SUSPECT on the VHF Communication Transceiver No. 3, M411.

HAP (b) Put a tag that reads OK on the other VHF communication transceiver.

HAP (c) Exchange the locations of the two VHF communication transceivers. These are the tasks:

HAP VHF Communication Transceiver - Removal, AMM TASK 23-12-21-020-801

HAP VHF Communication Transceiver - Installation, AMM TASK 23-12-21-420-801

HAP (d) Do the VHF Link Test subtask (23-27-00-730-082-009) contained in this task: ACARS - System Test, AMM TASK 23-27-00-700-812-009

HAP (e) If VHF Link test is satisfactory, then do these steps:

HAP 1) Replace the VHF communication transceiver tagged SUSPECT. These are the tasks:

HAP VHF Communication Transceiver - Removal, AMM TASK 23-12-21-020-801,

HAP VHF Communication Transceiver - Installation, AMM TASK 23-12-21-420-801.

NOTE: If it is your airlines' policy, you must install the VHF communication transceiver with the OK tag in its initial location and do the VHF Link test again using the new VHF No. 3 transceiver.

HAP 2) If the VHF Link test is satisfactory, then you have corrected the fault.

HAP (f) If the VHF Link test is not satisfactory, then do these steps:

BOEING PROPRIETARY - Copyright © Unpublished Work - See title page for details

HAP 1) If it is your airlines' policy, you must install the VHF communication transceivers in their initial locations. These are the tasks:

HAP VHF Communication Transceiver - Removal, AMM TASK 23-12-21-020-801,

HAP VHF Communication Transceiver - Installation, AMM TASK 23-12-21-420-801.

HAP 2) Remove the tags from the VHF communication transceivers.

HAP 3) Continue the procedure.

HAP (6) Do these steps to do a check of the VHF Communication Antenna No. 3 system:

HAP (a) If possible, do a voice transmission using VHF Communication Transceiver No. 3:

HAP 1) If the voice transmission was satisfactory, then do the Fault Isolation Procedure - ACARS MU and Wiring Check below.

HAP 2) If a voice transmission is not possible or the voice transmission was not satisfactory, then continue.

HAP (b) Visually inspect the VHF Communication Antenna No. 3.

HAP 1) If you find any damage, then do these steps:

HAP a) Replace VHF Communication Antenna No. 3 or repair any damage found (AMM TASK 23-12-11-000-801) (AMM TASK 23-12-11-400-801).

HAP b) Do the VHF Link Test subtask (23-27-00-730-082-009) contained in this task: ACARS - System Test, AMM TASK 23-27-00-700-812-009

HAP c) If the VHF Link test is satisfactory, then you corrected the fault.

HAP d) If the VHF Link test is not satisfactory, then continue.

HAP 2) If you do not find any damage, then continue the procedure.

HAP (7) Do this check of the VHF Communication Antenna No. 3, M225, and the RF coaxial cable:

HAP (a) Remove the VHF Communication Transceiver No. 3, M411. To remove it, do this task: VHF Communication Transceiver - Removal, AMM TASK 23-12-21-020-801.

HAP (b) Do a time domain reflectometry check of the coaxial cable from the VHF Communication Transceiver No. 3, M411 to the VHF Communication Antenna No. 3, M225 (WDM 23-12-31). To do the check, do this task: Coaxial Cable Inspection, AMM TASK 20-10-72-210-801.

HAP (c) If you find a problem with the coaxial cable, repair or replace the coaxial cable.

HAP (d) If you find a problem with the VHF communication antenna, replace the VHF Communication Antenna No. 3, M225. These are the tasks:

HAP VHF Communication Antenna - Removal, AMM TASK 23-12-11-000-801,

HAP VHF Communication Antenna - Installation, AMM TASK 23-12-11-400-801.

HAP (e) Re-install the VHF Communication Transceiver No. 3, M411. To install it, do this task: VHF Communication Transceiver - Installation, AMM TASK 23-12-21-420-801.

HAP (f) Do the VHF Link Test subtask (23-27-00-730-082-009) contained in this task: ACARS - System Test, AMM TASK 23-27-00-700-812-009

HAP 1) If the VHF Link test is satisfactory, then you corrected the fault.

HAP 2) If the VHF Link test is not satisfactory, do the Fault Isolation Procedure - ACARS MU and Wiring Check below.

HAP G. Fault Isolation Procedure - ACARS Management Unit Problem

HAP (1) Replace the ACARS management unit (CMU), M2127or M2128. These are the tasks:

BOEING PROPRIETARY - Copyright © Unpublished Work - See title page for details

HAP ACARS Communications Management Unit (CMU) Removal, AMM TASK 23-27-33-020-801,
HAP ACARS Communications Management Unit (CMU) Installation, AMM
HAP TASK 23-27-33-420-801.
HAP (a) If the installation test for the ACARS CMU is satisfactory, then you corrected the fault.
HAP H. Fault Isolation Procedure - ACARS MU and Wiring Check
HAP (1) Do these steps:
HAP (a) Replace the ACARS communications management unit (CMU), M2127 or M2128. These are
HAP the tasks:
HAP ACARS Communications Management Unit (CMU) Removal, AMM
HAP TASK 23-27-33-020-801,
HAP ACARS Communications Management Unit (CMU) Installation, AMM
HAP TASK 23-27-33-420-801.
HAP (b) Do the VHF Link Test subtask (23-27-00-730-082-009) contained in this task: ACARS -
HAP System Test, AMM TASK 23-27-00-700-812-009
HAP 1) If the VHF Link test is satisfactory, then you corrected the fault.
HAP 2) If the VHF Link test is not satisfactory, do the Fault Isolation Procedure - ACARS MU and
HAP Wiring Check below.
HAP (2) Do these steps:
HAP (a) Do a check of the wiring between between the ACARS communications management unit
HAP (CMU), M2127 or M2128 and VHF Communication Transceiver No. 3 (WDM 23-27-35).
HAP (b) Repair any problems that you find.
HAP (c) Do the VHF Link Test subtask (23-27-00-730-082-009) contained in this task: ACARS -
HAP System Test, AMM TASK 23-27-00-700-812-009
HAP 1) If the VHF Link test is satisfactory, then you corrected the fault.
HAP 2) If the VHF Link test is not satisfactory, do the Fault Isolation Procedure - ACARS MU and
HAP Wiring Check below.

END OF TASK

HAP **807. <u>An Out-Off-On-In (OOOI) value is not correct - Fault Isolation</u>**
HAP A. Description
HAP (1) An Out-Off-On-In (OOOI) value is not correct.
HAP B. Possible Causes
HAP (1) Communications Management Unit (CMU1-1), M2127 software
HAP (2) Communications Management Unit (CMU-1), M2127
HAP (3) Proximity Switch Electronics Unit, M2061
HAP (4) Wiring problem

BOEING PROPRIETARY - Copyright © Unpublished Work - See title page for details

HAP C. Circuit Breakers

HAP (1) These are the primary circuit breakers related to the fault:

HAP F/O Electrical System Panel, P6-1

Row	Col	Number	Name
HAP 031-036			
E	7	C00744	ACARS MU AC
HAP 031-054, 101-999			
E	8	C01483	CMU-1 AC
E	9	C01500	CMU/ACARS DC

HAP D. Related Data

HAP (1) (SSM 23-27-11) or (SSM 23-27-31)

HAP (2) (WDM 23-27-11) or (WDM 23-27-31)

HAP E. Initial Evaluation

HAP (1) Push the MENU key on the left and right Control and Display Units (CDU-1 and CDU-2).

HAP (2) Do the OOOI Test subtask (23-27-00-730-087-009) contained in this task: ACARS - System Test, AMM TASK 23-27-00-700-812-009

HAP (a) If the OOOI test is satisfactory, then there was an intermittent fault.

HAP (b) If the OOOI test is not satisfactory, Do the Fault Isolation Procedure - OOOI Problem below.

HAP F. Fault Isolation Procedure - OOOI Problem

HAP (1) Do this task: ACARS - Operational Test, AMM TASK 23-27-00-740-814-009.

HAP (a) If the ACARS Operational Test is satisfactory, then do the Fault Isolation Procedure - OOOI Switch Test below.

HAP (b) If the ACARS Operational Test is not satisfactory, then replace the ACARS communications management unit (CMU1), M2127.

HAP These are the tasks:

HAP ACARS Communications Management Unit (CMU) Removal, AMM TASK 23-27-33-020-801,

HAP ACARS Communications Management Unit (CMU) Installation, AMM TASK 23-27-33-420-801.

HAP 1) Do the OOOI Test subtask (23-27-00-730-087-009) contained in this task: ACARS - System Test, AMM TASK 23-27-00-700-812-009

HAP a) If the OOOI test is satisfactory, then you corrected the fault.

HAP b) If the OOOI test is not satisfactory, then do the Fault Isolation Procedure - OOOI Switch Test below.

HAP G. Fault Isolation Procedure - OOOI Switch Test

HAP (1) Open and close a failing OOOI switch.

HAP (a) If the OOOI value changed correctly, there was an intermittent fault.

HAP (b) If the OOOI value did not change correctly, then continue.

HAP 1) Do a check of the OOOI switch and wiring.

HAP NOTE: See Related Data WDMs for additional OOOI switch information.

BOEING PROPRIETARY - Copyright © Unpublished Work - See title page for details

HAP 2) Repair any problems that you find.

HAP 3) Do the OOOI Test subtask (23-27-00-730-087-009) contained in this task: ACARS -
HAP System Test, AMM TASK 23-27-00-700-812-009

HAP a) If the OOOI test is satisfactory, then you corrected the fault.

END OF TASK

HAP **808. VHF-3 transmits continuously on the ELT VHF frequency of 121.5 Mhz - Fault Isolation**

HAP A. Description

HAP (1) The #3 VHF transceiver is transmitting continuously on the ELT VHF frequency of 121.5 Mhz.

HAP B. Possible Causes

HAP (1) ACARS Communications Management Unit 1, M2127

HAP (2) VHF Communication Transceiver No. 3, M411

HAP (3) Wiring problem.

HAP C. Circuit Breakers

HAP (1) These are the primary circuit breakers related to the fault:

HAP CAPT Electrical System Panel, P18-2

Row	Col	Number	Name
D	12	C00471	COMMUNICATIONS VHF 3

HAP F/O Electrical System Panel, P6-1

Row	Col	Number	Name
HAP 031-036			
E	7	C00744	ACARS MU AC
HAP 031-054, 101-999			
E	8	C01483	CMU-1 AC
E	9	C01500	CMU/ACARS DC

HAP D. Related Data

HAP (1) (SSM 23-12-31) or (SSM 23-27-31)

HAP (2) (WDM 23-12-31) or (WDM 23-27-35)

HAP E. Initial Evaluation

HAP (1) Push the MENU key on the left and right Control and Display Units (CDU-1 and CDU-2).

HAP (a) If the <ACARS prompt does not show on any CDU then do these steps:

HAP 1) Look at the front panel of the ACARS CMU, M2127

HAP NOTE: The ACARS CMU is on the E4-1 shelf in the electronic equipment bay.

HAP 2) If all front panel lights are flashing, then do the Fault Isolation Procedure - ACARS
HAP Management Unit Problem below.

HAP 3) If any front panel lights are on, then continue.

HAP (2) Do the ACARS CMU BITE test:

HAP (a) Push and hold the TEST switch on the front of the ACARS CMU.

HAP (b) Make sure that all the lights on the front of the CMU are on.

BOEING PROPRIETARY - Copyright © Unpublished Work - See title page for details

HAP (c) Release the switch and wait at least one minute.

HAP (d) If the green XFER COMP light is on, make sure the system select switch on the data loader control panel (P61) is set to NORM or NORMAL.

HAP (e) If the HW FAIL, LOAD SW, XFER BUSY or XFER FAIL light is on, reload the correct ACARS software. To reload the software, do this task: ACARS Communications Management Unit Software Installation with an Airborne Data Loader (ADL), AMM TASK 23-27-33-470-802.

HAP NOTE: Incorrect or incomplete ACARS CMU software can cause these lights to be on.

HAP (f) Make sure that only the green MU PASS light is on.

HAP (g) If the ACARS CMU BITE test is not satisfactory, do the Fault Isolation Procedure - ACARS Communications Management Unit Problem below.

HAP (h) If the ACARS CMU BITE test is satisfactory, do the Fault Isolation Procedure - ACARS/VHF-3 Interface Problem below.

HAP F. Fault Isolation Procedure - ACARS Communications Management Unit Problem

HAP (1) Replace the ACARS communications management unit (CMU) 1, M2127.

HAP These are the tasks:

HAP ACARS Communications Management Unit (CMU) Removal, AMM TASK 23-27-33-020-801,

HAP ACARS Communications Management Unit (CMU) Installation, AMM TASK 23-27-33-420-801.

HAP (a) If the installation test for the ACARS CMU is satisfactory, then you corrected the fault.

HAP G. Fault Isolation Procedure - ACARS/VHF-3 Interface Problem

HAP (1) Open these circuit breakers and install safety tags:

HAP F/O Electrical System Panel, P6-1

	Row	Col	Number	Name
HAP	**HAP 031-036**			
HAP	E	7	C00744	ACARS MU AC
HAP	**HAP 031-054, 101-999**			
HAP	E	8	C01483	CMU-1 AC
HAP	E	9	C01500	CMU/ACARS DC

HAP (2) If the transmission on the ELT VHF frequency stops, then do these steps:

HAP (a) Replace the ACARS communications management unit (CMU) 1, M2127. These are the tasks:

HAP ACARS Communications Management Unit (CMU) Removal, AMM TASK 23-27-33-020-801,

HAP ACARS Communications Management Unit (CMU) Installation, AMM TASK 23-27-33-420-801.

HAP 1) If the installation test for the ACARS CMU is satisfactory, then you corrected the fault.

HAP (3) If the transmission on the ELT VHF frequency does not stop, then do these steps:

HAP (a) Replace the VHF-3 communication transceiver. These are the tasks:

HAP AMM TASK 23-12-21-020-801

BOEING PROPRIETARY - Copyright © Unpublished Work - See title page for details

HAP AMM TASK 23-12-21-420-801

HAP 1) If the installation test for the VHF-3 communication transceiver is satisfactory, then you
HAP corrected the fault.

END OF TASK

HAP

BOEING PROPRIETARY - Copyright © Unpublished Work - See title page for details

801. SELCAL Call Switch Problem - Fault Isolation

A. Description

(1) A call switch on Audio control panel, does not operate correctly.

B. Possible Causes

(1) Audio control panel, P8-6 (captain's), P8-7 (first officer's) or P5-15 (first observer's).

(2) SELCAL decoder, M25

(3) Wiring problem

C. Circuit Breakers

(1) This is the primary circuit breaker related to the fault:

CAPT Electrical System Panel, P18-2

Row	Col	Number	Name
D	15	C00058	COMMUNICATIONS SELCAL

D. Related Data

(1) (SSM 23-22-11)

(2) (WDM 23-22-11)

E. Initial Evaluation

(1) Do this check of the Audio control panel:

(a) Push the PTT for the applicable HF switch or VHF switch to reset the Call Light.

1) If the call light goes off for the applicable HF switch or VHF switch, then there was an intermittent fault.

2) If the call light does not go off for the applicable HF switch or VHF switch, then do the Fault Isolation Procedure below.

F. Fault Isolation Procedure

(1) Replace the Audio control panel.

These are the tasks:

Audio Control Panel Removal, AMM TASK 23-51-02-000-801,

Audio Control Panel Installation, AMM TASK 23-51-02-400-801.

(a) If the call switch resets correctly, then you corrected the fault.

(b) If the call switch does not reset correctly, then continue.

(2) Replace the SELCAL decoder unit.

These are the tasks:

SELCAL Decoder Unit Removal, AMM TASK 23-28-11-020-801,

SELCAL Decoder Installation, AMM TASK 23-28-11-420-801.

(a) If the call switch does reset correctly, then you corrected the fault.

(b) If the call switch does not reset correctly, then continue.

(3) Do this check of the wiring:

(a) Remove the Remote Electronics Unit. To remove it, do this task: AMM TASK 23-51-01-000-801.

BOEING PROPRIETARY - Copyright © Unpublished Work - See title page for details

(b) Remove the SELCAL decoder unit, M00025. To remove it, do this task: SELCAL Decoder Unit Removal, AMM TASK 23-28-11-020-801.

(c) Do a wiring check between the pins of connector D2501A for the Remote Electronics Unit (REU), and connector D2555B for the SELCAL decoder unit: Refer to WDM 23-22-11 for details.

FUNCTION KEY

	REU CONNECTOR		SELCAL DECODER CONNECTOR
HF1 (if applicable)	**D2501A**		**D2555B**
	pin C10	- - - - - - - - - - - - - - - - -	pin C7
HF2 (if applicable)	**D2501A**		**D2555B**
	pin J7	- - - - - - - - - - - - - - - - - - -	pin D7
VHF1	**D2501A**		**D2555B**
	pin H6	- - - - - - - - - - - - - - - - - -	pin D6
VHF2	**D2501A**		**D2555B**
	pin A9	- - - - - - - - - - - - - - - - - -	pin A7
VHF3 (if applicable)	**D2501A**		**D2555B**
	pin F7	- - - - - - - - - - - - - - - - - -	pin B7

(d) If you find a problem with the wiring, then do these steps:

1) Repair the wiring.
2) Re-connect the connectors.
3) Re-install the Remote Electronics Unit. To install it, do this task: AMM TASK 23-51-01-000-802.
4) Re-install the SELCAL decoder unit. To install it, do this task: SELCAL Decoder Installation, AMM TASK 23-28-11-420-801.
5) If the call switch does reset correctly, then you corrected the fault.

END OF TASK

802. SELCAL Call Light Problem - Fault Isolation

A. Description

(1) The mic/call light on the Audio Control Panel does not operate correctly.

B. Possible Causes

(1) Audio Control Panel, captain's, first officer's, or observer's.

(2) SELCAL decoder, M25

(3) Wiring problem

BOEING PROPRIETARY - Copyright © Unpublished Work - See title page for details

C. Circuit Breakers

(1) This is the primary circuit breaker related to the fault:

CAPT Electrical System Panel, P18-2

Row	Col	Number	Name
D	15	C00058	COMMUNICATIONS SELCAL

D. Related Data

(1) (SSM 23-22-11)

(2) (WDM 23-22-11)

E. Initial Evaluation

(1) Push the mic/call light.

(a) If the light comes on, then do these steps:

1) Push the mic call light again.

a) If the mic/call light goes off, then there was an intermittent fault.

b) If the mic/call light stays on, then, do this task: SELCAL Call Switch Problem - Fault Isolation, 23-28 TASK 801.

(b) If the light does not come on, then do the Fault Isolation Procedure below.

F. Fault Isolation Procedure

(1) Replace the Audio Control Panel.

These are the tasks:

AMM TASK 23-51-02-000-801,

AMM TASK 23-51-02-400-801.

(a) If the call light does reset correctly, then you corrected the fault.

(b) If the call light does not reset correctly, then continue.

(2) Replace the SELCAL decoder unit.

These are the tasks:

SELCAL Decoder Unit Removal, AMM TASK 23-28-11-020-801,

SELCAL Decoder Installation, AMM TASK 23-28-11-420-801.

(a) If the call switch does reset correctly, then you corrected the fault.

(b) If the call switch does not reset correctly, then continue.

(3) Do this check of the wiring:

(a) Remove the Audio Control Panel. To remove it, do this task: Audio Control Panel Removal, AMM TASK 23-51-02-000-801.

(b) Remove the SELCAL decoder unit, M00025. To remove it, do this task: SELCAL Decoder Unit Removal, AMM TASK 23-28-11-020-801.

(c) Do a wiring check between the pins of connector D141 for the Audio Control Panel (observer's) and connector D2555B for the SELCAL decoder unit: Refer to WDM 23-22-11 for details.

BOEING PROPRIETARY - Copyright © Unpublished Work - See title page for details

FUNCTION KEY

	ACP CONNECTOR		SELCAL DECODER CONNECTOR
HF1 (if applicable)	**D141**		**D2555B**
	pin 4	- - - - - - - - - - - - - - - - - - - -	pin C7
HF2 (if applicable)	**D141**		**D2555B**
	pin 5	- - - - - - - - - - - - - - - - - - - -	pin D7
VHF1	**D141**		**D2555B**
	pin 1	- - - - - - - - - - - - - - - - - - - -	pin D6
VHF2	**D141**		**D2555B**
	pin 2	- - - - - - - - - - - - - - - - - - - -	pin A7
VHF3 (if applicable)	**D141**		**D2555B**
	pin 3	- - - - - - - - - - - - - - - - - - - -	pin B7

(d) Do the wiring check for the captain's ACP and the first officer's ACP. Refer to WDM 23-22-11 for ACP connector numbers.

(e) If you find a problem with the wiring, then do these steps:

1) Repair the wiring.
2) Re-connect the connectors.
3) Re-install the Audio Control Panel. To install it, do this task: Audio Control Panel Installation, AMM TASK 23-51-02-400-801.
4) Re-install the SELCAL decoder unit. To install it, do this task: SELCAL Decoder Installation, AMM TASK 23-28-11-420-801.
5) If the call switch does reset correctly, then you corrected the fault.

——————— END OF TASK ———————

803. Aural Warning Unit Chimes Problem - Fault Isolation

A. Description

(1) The chime on the aural warning unit module, M315 does not operate correctly for calls on VHF or HF.

B. Possible Causes

(1) Remote electronics unit, M1353

(2) Aural warning unit, M315

(3) Wiring problem

BOEING PROPRIETARY - Copyright © Unpublished Work - See title page for details

C. Circuit Breakers

(1) This is the primary circuit breaker related to the fault:

CAPT Electrical System Panel, P18-2

Row	Col	Number	Name
D	15	C00058	COMMUNICATIONS SELCAL

D. Related Data

(1) (SSM 23-22-11)

(2) (WDM 23-22-11)

E. Initial Evaluation

(1) Initiate the chime in the aural warning unit, M315.

(a) If the chime comes on, then there was an intermittent fault.

(b) If the chime does not come on, then do the Fault Isolation Procedure below.

F. Fault Isolation Procedure

(1) Replace the aural warning unit, M315.

These are the tasks:

Aural Warning Module Removal, AMM TASK 31-51-04-000-801,

Aural Warning Module Installation, AMM TASK 31-51-04-400-801.

(a) If the chime operates correctly, then you corrected the fault.

(b) If the chime does not operate correctly, then continue.

(2) Replace the remote electronics unit, M1353.

These are the tasks:

Remote Electronics Unit (REU) Removal, AMM TASK 23-51-01-000-801,

Remote Electronics Unit (REU) Installation, AMM TASK 23-51-01-000-802.

(a) If the chime operates correctly, then you corrected the fault.

(b) If the chime does not operate correctly, then continue.

(3) Do this check of the wiring:

(a) Remove the Audio Selector Panel P5-15, P8-6, and P8-7. To remove it, do this task: AMM TASK 23-51-02-000-801.

(b) Remove the aural warning unit, M315. To remove it, do this task: AMM TASK 31-51-04-000-801.

(c) Do a wiring check between these pins of connector D141 for the Audio control panel and connector D940 for the aural warning unit:

	ASP CONNECTOR D141		AURAL WARN UNIT CONNECTOR D940
HF1 (if applicable)	pin 4	- - - - - - - - - - - - - - - - - - - -	pin 8

BOEING PROPRIETARY - Copyright © Unpublished Work - See title page for details

HF2 (if applicable)	**D141**		**D940**
	pin 5	- - - - - - - - - - - - - - - - - - -	pin 8
VHF1	**D141**		**D940**
	pin 1	- - - - - - - - - - - - - - - - - - -	pin 8
VHF2	**D141**		**D940**
	pin 2	- - - - - - - - - - - - - - - - - - -	pin 8
VHF3 (if applicable)	**D141**		**D940**
	pin 3	- - - - - - - - - - - - - - - - - - -	pin 8

(d) If you find a problem with the wiring, then do these steps:

1) Repair the wiring.
2) Re-connect the connectors.
3) Re-install the Audio Selector Panel P5-15, P8-6, and P8-7. To remove it, do this task: AMM TASK 23-51-02-400-801.
4) Re-install the aural warning unit. To install it, do this task: AMM TASK 31-51-04-400-801.
5) If the chime operates correctly, then you corrected the fault.

——————— END OF TASK ———————

804. SELCAL Operation Problem - Fault Isolation

A. Description

(1) The SELCAL system does not operate correctly for VHF or HF calls.

B. Possible Causes

(1) SELCAL decoder unit, M25

(2) Wiring problem

C. Circuit Breakers

(1) This is the primary circuit breaker related to the fault:

CAPT Electrical System Panel, P18-2

Row	Col	Number	Name
D	15	C00058	COMMUNICATIONS SELCAL

D. Related Data

(1) (SSM 23-22-11)

(2) (WDM 23-22-11)

E. Fault Isolation Procedure

(1) Replace the SELCAL decoder unit.

These are the tasks:

SELCAL Decoder Unit Removal, AMM TASK 23-28-11-020-801,

BOEING PROPRIETARY - Copyright © Unpublished Work - See title page for details

SELCAL Decoder Installation, AMM TASK 23-28-11-420-801.

(a) If the call switch does reset correctly, then you corrected the fault.

(b) If the call switch does not reset correctly, then continue.

(2) Do this check of the wiring:

(a) Remove the Audio Selector Panel P5-15, P8-6, and P8-7. To remove it, do this task: AMM TASK 23-51-02-000-801.

(b) Remove the SELCAL decoder unit, M25. To remove it, do this task: AMM TASK 23-28-11-020-801.

(c) Do a wiring check between the pins of connector D141 for the Audio Selector Panel, and connector D2555B for the SELCAL decoder unit:

FUNCTION KEY

	AUDIO SELECTOR PANEL		**SELCAL DECODER CONNECTOR**
HF1 (if applicable)	**D141**		**D2555B**
	pin 4	- - - - - - - - - - - - - - - - - - - -	pin C7
HF2 (if applicable)	**D141**		**D2555B**
	pin J7	- - - - - - - - - - - - - - - - - - - -	pin D7
VHF1	**D141**		**D2555B**
	pin 1	- - - - - - - - - - - - - - - - - - - -	pin D6
VHF2	**D141**		**D2555B**
	pin 2	- - - - - - - - - - - - - - - - - - - -	pin A7
VHF3 (if applicable)	**D141**		**D2555B**
	pin	- -	pin B7

(d) If you find a problem with the wiring, then do these steps:

1) Repair the wiring.

2) Re-connect the connectors.

3) Re-install the Audio Selector Panel. To install it, do this task: AMM TASK 23-51-02-400-801.

4) Re-install the SELCAL decoder unit. To install it, do this task: AMM TASK 23-28-11-420-801.

5) If the call switch does reset correctly, then you corrected the fault.

END OF TASK

BOEING PROPRIETARY - Copyright © Unpublished Work - See title page for details

801. Passenger Address Does Not Operate from Flight Deck - Fault Isolation

A. Description

(1) No, intermittent, or poor quality audio can be heard from the passenger address (PA) speakers when the flight crew makes a PA announcement.

B. Possible Causes

(1) Microphone

(2) Wiring

(3) Passenger address amplifier, M63

(4) Remote electronic unit (REU), M1353.

C. Circuit Breakers

(1) These are the primary circuit breakers related to the fault:

F/O Electrical System Panel, P6-1

Row	Col	Number	Name
D	4	C00082	COMMUNICATIONS PA AMPL BAT

F/O Electrical System Panel, P6-2

Row	Col	Number	Name
C	21	C00560	INTERPHONE POWER F/O DC 2
C	22	C00561	INTERPHONE POWER F/O BAT
C	23	C00239	INTERPHONE POWER CAPT DC 2
C	24	C00240	INTERPHONE POWER CAPT BAT
D	21	C00084	INTPH AND WARN
D	22	C00086	AUDIO F/O
D	23	C00083	AUDIO CAPT
D	24	C00085	AUDIO OBS

D. Related Data

(1) (SSM 23-31-11)

(2) (SSM 23-31-12)

(3) (SSM 23-31-13)

(4) (SSM 23-31-14)

(5) (SSM 23-51-11)

(6) (SSM 23-51-21)

(7) (SSM 23-51-31)

(8) (WDM 23-31-01)

(9) (WDM 23-31-02)

(10) (WDM 23-31-03)

(11) (WDM 23-31-04)

(12) (WDM 23-51-11)

BOEING PROPRIETARY - Copyright © Unpublished Work - See title page for details

(13) (WDM 23-51-21)

(14) (WDM 23-51-31)

E. Fault Isolation Procedure

(1) Do this check of the microphone:

(a) Use a microphone in the flight deck, other than where the problem was reported, to make an announcement over the passenger address system.

1) Make sure you can hear the announcement on all of the applicable speakers.

(b) If you can hear the announcement on the speakers, then replace the microphone where the problem was reported.

1) Do the Repair Confirmation at the end of this task.

a) If the Repair Confirmation is not satisfactory, then continue.

(c) If you cannot hear the announcement on the speakers, or the announcement is intermittent, then continue.

(2) Do these steps to examine and repair the wires to the applicable microphone:

(a) For the PA microphone at the aft end of the control stand, use the 23-31 SSM and WDM listed in Related Data To examine these wires:

1) Examine and repair the wires between the connector D2639B at the passenger address amplifier and the connector D6001 in the control stand.

a) If you found a problem, then do the Repair Confirmation at the end of this task.

b) If the Repair Confirmation is not OK, then continue.

(b) For other flight deck microphones, use the 23-51 SSM and WDM listed in Related Data to examine these wires:

NOTE: Other microphones are the Captains's or First Officer's hand microphone, boom microphone, oxygen mask microphone or the Observer seat microphones.

1) Remove the remote electronic unit (REU). To remove it, do this task: Remote Electronics Unit (REU) Removal, AMM TASK 23-51-01-000-801.

2) Examine and repair the wires between the connector D2501B at the REU and the applicable microphone jack:

NOTE: Airplanes without active noise suppression may use a three wire or four wire microhone connector. Airplanes with active noise suppression may use a three wire, four wire, or five wire microphone connector.

(c) If you found and repaired a wire problem, then do these steps:

1) Re-install the REU. To install it, do this task: Remote Electronics Unit (REU) Installation, AMM TASK 23-51-01-000-802.

2) If it is necessary, re-install the applicable microphone.

3) Do the Repair Confirmation at the end of this task.

a) If the Repair Confirmation is not satisfactory, then continue.

(d) If no wire problem was found, then re-install the REU. To install it, do this task: Remote Electronics Unit (REU) Installation, AMM TASK 23-51-01-000-802.

(3) Replace the passenger address amplifier, M63.

These are the tasks:

Passenger Address (PA) Amplifier Removal, AMM TASK 23-31-01-000-801,

BOEING PROPRIETARY - Copyright © Unpublished Work - See title page for details

Passenger Address (PA) Amplifier Installation, AMM TASK 23-31-01-400-801.

(a) Do the Repair Confirmation at the end of this task.

1) If the Repair Confirmation is not satisfactory, then continue.

(4) Replace the remote electronic unit, M1353.

These are the tasks:

Remote Electronics Unit (REU) Removal, AMM TASK 23-51-01-000-801,

Remote Electronics Unit (REU) Installation, AMM TASK 23-51-01-000-802.

(a) Do the Repair Confirmation at the end of this task.

F. Repair Confirmation

(1) Do this test of the passenger address system:

(a) Set the PA microphone selector switch on the audio control panel (ACP) to ON.

1) Make sure its light comes on.

(b) Push and hold the R/T - I/C switch on the ACP in the R/T position.

(c) Speak into the microphone.

1) Make sure you can hear the announcement on all of the applicable speakers.

(d) If you can hear the announcement on the speakers, then you corrected the fault.

END OF TASK

802. Passenger Address Volume Problem - Fault Isolation

A. Description

(1) The audio heard from the passenger address speakers is too loud or too quiet.

(2) The audio heard on the attendant and lavatory speakers is too loud or too quiet.

B. Possible Causes

(1) Master gain on PA amplifier

(2) PA Gain on Remote Electronic Unit (REU), M1353

(3) Passenger address (PA) amplifier, M63

(4) Wiring

(5) Remote electronic unit (REU), M1353

C. Related Data

(1) (SSM 73-22-31)

(2) (WDM 23-31-01)

(3) (WDM 23-31-02)

(4) (WDM 23-31-03)

(5) (WDM 23-31-04)

(6) (WDM 23-51-11)

(7) (WDM 23-51-21)

(8) (WDM 23-51-31)

BOEING PROPRIETARY - Copyright © Unpublished Work - See title page for details

D. Fault Isolation Procedure

HAP ALL; AIRPLANES WITH PA P/N 622-5342-101

(1) Adjust the master gain on the PA amplifier:

(a) Set and hold the test mode switch on the PA amplifier front panel to LEVEL.

(b) Turn the MASTER GAIN screw on the front panel clockwise or counterclockwise to the desired level.

NOTE: To get the maximum undistorted audio, turn the master gain screw clockwise until the front panel LEDs show 70.7.

(c) Do the Repair Confirmation at the end of this task.

1) If the Repair Confirmation is not satisfactory, then continue.

HAP ALL

(2) Replace the passenger address (PA) amplifier, M63.

These are the tasks:

Passenger Address (PA) Amplifier Removal, AMM TASK 23-31-01-000-801,

Passenger Address (PA) Amplifier Installation, AMM TASK 23-31-01-400-801.

(a) Do the Repair Confirmation at the end of this task.

1) If the Repair Confirmation is not satisfactory, then continue.

(3) Do this check of the wiring:

(a) Remove the remote electronic unit (REU). To remove it, do this task: Remote Electronics Unit (REU) Removal, AMM TASK 23-51-01-000-801.

(b) Open this access panel to get access to junction box J22:

Number	Name/Location
113AW	Forward Nose Wheel Well Panel

(c) Disconnect electrical connector D10918 from the engine 1 running relay, R564.

(d) Open this access panel to get access to junction box J24:

Number	Name/Location
114AW	Forward Nose Wheel Well Panel

(e) Disconnect electrical connector D10916 from the engine 2 running relay, R563.

(f) Do a continuity check between these pins:

	REU CONNECTOR D2501A		**RELAY CONNECTOR D10918**
ENGINE 1 RUNNING RELAY (R564)	pin F5	- - - - - - - - - - - - - - - - - -	pin A3
ENGINE 2 RUNNING RELAY (R563)	**D2501A**		**D10916**
	pin K5	- - - - - - - - - - - - - - - - - -	pin A3

(g) If there is not continuity between the pins, then do these steps:

BOEING PROPRIETARY - Copyright © Unpublished Work - See title page for details

1) Repair the wiring.
2) Re-connect electrical connector D10918 to R564.
3) Close this access panel:

Number	Name/Location
113AW	Forward Nose Wheel Well Panel

4) Re-connect electrical connector D10916 to R563.
5) Close this access panel:

Number	Name/Location
114AW	Forward Nose Wheel Well Panel

6) Re-install the REU. To install it, do this task: Remote Electronics Unit (REU) Installation, AMM TASK 23-51-01-000-802.
7) Do the Repair Confirmation at the end of this task.
   a) If the Repair Confirmation is not OK, then continue.

(h) If there is continuity, then do these steps and continue:
1) Re-connect electrical connector D10918 to R564.
2) Close this access panel:

Number	Name/Location
113AW	Forward Nose Wheel Well Panel

3) Re-connect electrical connector D10916 to R563.
4) Close this access panel:

Number	Name/Location
114AW	Forward Nose Wheel Well Panel

(4) Install a new remote electronic unit (REU), M1353. To install it, do this task: Remote Electronics Unit (REU) Installation, AMM TASK 23-51-01-000-802.
(a) Do the Repair Confirmation at the end of this task.

E. Repair Confirmation

(1) Do this test of the passenger address system:
(a) Set the PA microphone selector switch on the audio control panel (ACP) to ON.
1) Make sure its light comes on.
(b) Push and hold the R/T - I/C switch on the ACP in the R/T position.
(c) Speak into the microphone.
1) Make sure you can hear the announcement from the passenger address speakers.
(d) If you can hear the announcement on the speakers, then you corrected the fault.

END OF TASK

803. Chimes Do Not Turn Off - Fault Isolation

A. Description

(1) The chime in the passenger cabin does not turn off.

BOEING PROPRIETARY - Copyright © Unpublished Work - See title page for details

B. Fault Isolation Procedure

HAP ALL; AIRPLANES WITH PA P/N 622-5342-101

(1) Replace the passenger address (PA) amplifier, M63.

These are the tasks:

Passenger Address (PA) Amplifier Removal, AMM TASK 23-31-01-000-801,

Passenger Address (PA) Amplifier Installation, AMM TASK 23-31-01-400-801.

(a) Put the OPERATE/TONE switch on the front panel of the PA amplifier to the TONE position.

1) Make sure you can hear a high chime sound on the passenger address speakers.

(b) Put the OPERATE/TONE switch to the OPERATE position.

1) Make sure the chime sound is not heard.

(c) If the chime sound is not heard, then you corrected the fault.

HAP ALL

——————— END OF TASK ———————

804. Cabin Chime Does Not Operate - Fault Isolation

A. Description

(1) The chime in the passenger cabin does not sound when one or all of these conditions occurs:

(a) Passenger call button on the passenger service unit (PSU) is pushed

(b) Lavatory call button is pushed

(c) NO SMOKING switch is set to the ON position

(d) FASTEN BELTS switch is set to the ON position.

B. Possible Causes

(1) Passenger address (PA) amplifier, M63

(2) Wiring

(3) Passenger service unit (PSU)

(4) Lavatory call switch

(5) No smoking switch, S45

(6) No power to the no smoking relay

(7) No smoking relay, R25

(8) Fasten belts switch, S46

(9) No power to the fasten belts relay

(10) Fasten belts relay, R26

C. Circuit Breakers

(1) These are the primary circuit breakers related to the fault:

CAPT Electrical System Panel, P18-3

Row	Col	Number	Name
A	8	C01403	PASSENGER CABIN PASS CALL LEFT

BOEING PROPRIETARY - Copyright © Unpublished Work - See title page for details

Row	Col	Number	Name
B	8	C01404	PASSENGER CABIN PASS CALL RIGHT
D	11	C00442	PASSENGER CABIN SIGNS PASS SIGN CONT

F/O Electrical System Panel, P6-1

Row	Col	Number	Name
D	4	C00082	COMMUNICATIONS PA AMPL BAT

D. Related Data

(1) (SSM 23-31-11)

(2) (WDM 23-31-01)

E. Initial Evaluation

HAP ALL; AIRPLANES WITH PA P/N 622-5342-101

(1) Do this test of the passenger address (PA) amplifier:

(a) Put the OPERATE/TONE switch on the front panel of the passenger address (PA) amplifier, M63, to the TONE position.

1) Make sure you can hear a high chime sound on the attendant, lavatory, and passenger service unit speakers.

(b) Put the OPERATE/TONE switch to the OPERATE position.

(c) If you do not hear a high chime on the speakers, then do the Fault Isolation Procedure - No Chime below.

(d) If you hear a high chime on the speakers, then continue.

HAP ALL

(2) Do this test of the passenger call:

(a) Push the attendant call button on the PSU.

1) Make sure you hear a high chime on the attendant, lavatory, and passenger service unit speakers.

(b) If you do not hear a high chime on the speakers, then do the Fault Isolation Procedure - Passenger Call below.

(c) If you hear a high chime on the speakers, then continue.

(3) Do this test of the lavatory call:

(a) Push the call button in the lavatory.

1) Make sure you hear a high chime on the attendant, lavatory, and passenger service unit speakers.

(b) If you do not hear a high chime on the speakers, then do the Fault Isolation Procedure - Lavatory Call below.

(c) If you hear a high chime on the speakers, then continue.

(4) Do this test of the NO SMOKING switch:

(a) Set the NO SMOKING switch, on the P5 overhead panel in the flight compartment, to the ON position.

1) Make sure you hear a low chime on the attendant, lavatory, and passenger service unit speakers.

BOEING PROPRIETARY - Copyright © Unpublished Work - See title page for details

(b) If you do not hear a low chime on the speakers, then do the Fault Isolation Procedure - No Smoking Chime below.

(c) If you hear a low chime on the speakers, then continue.

(5) Do this test of the FASTEN BELTS switch:

(a) Set the FASTEN BELTS switch, on the P5 overhead panel in the flight compartment, to the ON position.

1) Make sure you hear a low chime on the attendant, lavatory, and passenger service unit speakers.

(b) If you do not hear a low chime on the speakers, then do the Fault Isolation Procedure - Fasten Belts Chime below.

(c) If you hear a low chime on the speakers, then there was an intermittent fault.

F. Fault Isolation Procedure - No Chime

HAP ALL; AIRPLANES WITH PA P/N 622-5342-101

(1) Replace the passenger address (PA) amplifier, M63.

These are the tasks:

Passenger Address (PA) Amplifier Removal, AMM TASK 23-31-01-000-801,

Passenger Address (PA) Amplifier Installation, AMM TASK 23-31-01-400-801.

(a) Put the OPERATE/TONE switch on the front panel of the PA amplifier to the TONE position.

1) Make sure you can hear a high chime sound on the attendant, lavatory, and passenger service unit speakers.

(b) Put the OPERATE/TONE switch to the OPERATE position.

(c) If you hear a chime, then you corrected the fault.

HAP ALL

G. Fault Isolation Procedure - Passenger Call

(1) Do this check of the wiring:

(a) Open these circuit breakers and install safety tags:

CAPT Electrical System Panel, P18-3

Row	Col	Number	Name
A	8	C01403	PASSENGER CABIN PASS CALL LEFT
B	8	C01404	PASSENGER CABIN PASS CALL RIGHT

F/O Electrical System Panel, P6-1

Row	Col	Number	Name
D	4	C00082	COMMUNICATIONS PA AMPL BAT

(b) Remove the passenger service unit (PSU). To remove it, do this task: Passenger Service Unit (PSU) Removal, AMM TASK 25-23-61-000-801.

(c) Remove the passenger address (PA) amplifier, M63. To remove it, do this task: Passenger Address (PA) Amplifier Removal, AMM TASK 23-31-01-000-801.

(d) Do a check for continuity between pin A11 of connector D2639B on the PA amplifier, M63, and pin 2 of the PSU connector.

(e) If there is not continuity, then do these steps:

1) Repair the wiring.

BOEING PROPRIETARY - Copyright © Unpublished Work - See title page for details

2) Re-install the PA amplifier, M63. To install it, do this task: Passenger Address (PA) Amplifier Installation, AMM TASK 23-31-01-400-801.

3) Re-install the PSU. To install it, do this task: Passenger Service Unit (PSU) Installation, AMM TASK 25-23-61-400-801.

4) Remove the safety tags and close these circuit breakers:

CAPT Electrical System Panel, P18-3

Row	Col	Number	Name
A	8	C01403	PASSENGER CABIN PASS CALL LEFT
B	8	C01404	PASSENGER CABIN PASS CALL RIGHT

F/O Electrical System Panel, P6-1

Row	Col	Number	Name
D	4	C00082	COMMUNICATIONS PA AMPL BAT

5) Push the attendant call button on the PSU.

a) Make sure you hear a chime over the attendant, lavatory, and passenger service unit speakers.

6) If you hear a chime over the speakers, then you corrected the fault.

7) If you did not hear a chime over the speakers, then continue.

(f) If there is continuity, then do these steps:

1) Install a new passenger service unit (PSU). To install it, do this task: Passenger Service Unit (PSU) Installation, AMM TASK 25-23-61-400-801.

2) Re-install the PA amplifier, M63. To install it, do this task: Passenger Address (PA) Amplifier Installation, AMM TASK 23-31-01-400-801.

3) Remove the safety tags and close these circuit breakers:

CAPT Electrical System Panel, P18-3

Row	Col	Number	Name
A	8	C01403	PASSENGER CABIN PASS CALL LEFT
B	8	C01404	PASSENGER CABIN PASS CALL RIGHT

F/O Electrical System Panel, P6-1

Row	Col	Number	Name
D	4	C00082	COMMUNICATIONS PA AMPL BAT

4) Push the attendant call button on the PSU.

a) Make sure you hear a chime over the attendant, lavatory, and passenger service unit speakers.

5) If you hear a chime over the speakers, then you corrected the fault.

H. Fault Isolation Procedure - Lavatory Call

(1) Do this test of the lavatory call:

(a) Push the call button in the lavatory.

1) Make sure the amber light on the exit locator signs comes on.

(b) If the light does not come on, then do these steps:

BOEING PROPRIETARY - Copyright © Unpublished Work - See title page for details

1) Open these circuit breakers and install safety tags:

CAPT Electrical System Panel, P18-3

Row	Col	Number	Name
A	8	C01403	PASSENGER CABIN PASS CALL LEFT
B	8	C01404	PASSENGER CABIN PASS CALL RIGHT

2) Replace the lavatory call switch.

a) To replace it, do this task: Lavatory Call Light - Light/Switch Replacement, AMM TASK 33-27-00-960-802.

3) Remove the safety tags and close these circuit breakers:

CAPT Electrical System Panel, P18-3

Row	Col	Number	Name
A	8	C01403	PASSENGER CABIN PASS CALL LEFT
B	8	C01404	PASSENGER CABIN PASS CALL RIGHT

4) Push the call button in the lavatory.

a) Make sure you hear a high chime on the attendant, lavatory, and passenger service unit speakers.

5) If you hear a high chime on the speakers, then you corrected the fault.

6) If you do not hear a high chime on the speakers, then continue.

(c) If the light comes on, then continue.

(2) Do this test of the wiring:

(a) Open these circuit breakers and install safety tags:

CAPT Electrical System Panel, P18-3

Row	Col	Number	Name
A	8	C01403	PASSENGER CABIN PASS CALL LEFT
B	8	C01404	PASSENGER CABIN PASS CALL RIGHT

F/O Electrical System Panel, P6-1

Row	Col	Number	Name
D	4	C00082	COMMUNICATIONS PA AMPL BAT

(b) Disconnect electrical connector D3732 from the left forward lavatory A module, M1415.

(c) Disconnect electrical connector D3738 from the left aft lavatory D module, M1418.

(d) Disconnect electrical connector D3740 from the right aft lavatory E module, M1419.

(e) Remove the passenger address (PA) amplifier, M63. To remove it, do this task: Passenger Address (PA) Amplifier Removal, AMM TASK 23-31-01-000-801.

(f) Do a check for continuity between these pins:

LAVATORY

	PA AMP CONNECTOR D2639B		**LAV CONNECTOR D3732**
LEFT FORWARD LAV A MODULE (M1415)			
	pin A11	- - - - - - - - - - - - - - - - -	pin 2

BOEING PROPRIETARY - Copyright © Unpublished Work - See title page for details

RIGHT AFT LAV C MODULE (M1417)	**D2639B**		**D3736**
	pin A11	- - - - - - - - - - - - - - - - -	pin 2
LEFT AFT LAV D MODULE (M1418)	**D2639B**		**D3738**
	pin A11	- - - - - - - - - - - - - - - - -	pin 2
RIGHT AFT LAV E MODULE (M1419)	**D2639B**		**D3740**
	pin A11	- - - - - - - - - - - - - - - - -	pin 2

LAVATORY

	PA AMP CONNECTOR		**LAV CONNECTOR**
LEFT FWD LAV F MODULE (M1420)	**D2639B**		**D3742**
	pin A11	- - - - - - - - - - - - - - - - -	pin 2
RIGHT AFT LAV G MODULE (M2191)	**D2639B**		**D12596**
	pin A11	- - - - - - - - - - - - - - - - -	pin 2
RIGHT AFT LAV H MODULE (M2435)	**D2639B**		**D13426**
	pin A11	- - - - - - - - - - - - - - - - -	pin 2
LEFT FWD LAV K MODULE (M2435)	**D2639B**		**D13324**
	pin A11	- - - - - - - - - - - - - - - - -	pin 2
LEFT FWD LAV R MODULE (M2435)	**D2639B**		**D13650**
	pin A11	- - - - - - - - - - - - - - - - -	pin 2

LAVATORY

	PA AMP CONNECTOR		**LAV CONNECTOR**
LEFT FORWARD LAV A MODULE (M1415)	**D2639B**		**D3732**
	pin A11	- - - - - - - - - - - - - - - - -	pin 2

BOEING PROPRIETARY - Copyright © Unpublished Work - See title page for details

LEFT AFT LAV D MODULE (M1418)	**D2639B**		**D3738**
	pin A11	- - - - - - - - - - - - - - - - -	pin 2
RIGHT AFT LAV G MODULE (M2191)	**D2639B**		**D12596**
	pin A11	- - - - - - - - - - - - - - - - -	pin 2

(g) If there is not continuity, then do these steps:

1) Repair the wiring.
2) Re-install the PA amplifier, M63. To install it, do this task: Passenger Address (PA) Amplifier Installation, AMM TASK 23-31-01-400-801.
3) Re-connect electrical connector D3732 to the left forward lavatory A module, M1415.
4) Re-connect electrical connector D3738 to the left aft lavatory D module, M1418.
5) Re-connect electrical connector D3740 to the right aft lavatory E module, M1419.

(h) Remove the safety tags and close these circuit breakers:

CAPT Electrical System Panel, P18-3

Row	Col	Number	Name
A	8	C01403	PASSENGER CABIN PASS CALL LEFT
B	8	C01404	PASSENGER CABIN PASS CALL RIGHT

F/O Electrical System Panel, P6-1

Row	Col	Number	Name
D	4	C00082	COMMUNICATIONS PA AMPL BAT

(i) Push the lavatory call button.

1) Make sure you hear a chime over the attendant, lavatory, and passenger service unit speakers.

(j) If you hear a chime over the speakers, then you corrected the fault.

I. Fault Isolation - No Smoking Chime

(1) Do this check of the no smoking switch:

(a) Open this circuit breaker and install safety tag:

CAPT Electrical System Panel, P18-3

Row	Col	Number	Name
D	11	C00442	PASSENGER CABIN SIGNS PASS SIGN CONT

(b) Disconnect electrical connector D1620 from the no smoking relay, R25, in the P6 panel.

(c) Set the NO SMOKING switch, on the P5 overhead panel in the flight compartment, to the ON position.

(d) Do a check for continuity between pin X2 of connector D1620 and structure ground.

(e) If there is not continuity, then do these steps:

1) Replace the NO SMOKING switch, S45.
2) Make sure the NO SMOKING switch is in the OFF position.

BOEING PROPRIETARY - Copyright © Unpublished Work - See title page for details

3) Re-connect electrical connector D1620 to the no smoking relay, R25, in the P6 panel.
4) Remove the safety tag and close this circuit breaker:

CAPT Electrical System Panel, P18-3

Row	Col	Number	Name
D	11	C00442	PASSENGER CABIN SIGNS PASS SIGN CONT

5) Set the NO SMOKING switch to the ON position.
   a) Make sure you hear a low chime on the attendant, lavatory, and passenger service unit speakers.
6) If you hear a chime on the speakers, then you corrected the fault.
7) If you did not hear a chime on the speakers, then do these steps:
   a) Set the NO SMOKING switch to the OFF position.
   b) Open this circuit breaker and install safety tag:

CAPT Electrical System Panel, P18-3

Row	Col	Number	Name
D	11	C00442	PASSENGER CABIN SIGNS PASS SIGN CONT

   c) Repair the wiring between pin X2 of connector D1620 on the no smoking relay, R25, and the NO SMOKING switch, S45.
   d) Remove the safety tag and close this circuit breaker:

CAPT Electrical System Panel, P18-3

Row	Col	Number	Name
D	11	C00442	PASSENGER CABIN SIGNS PASS SIGN CONT

   e) Set the NO SMOKING switch to the ON position.
   f) Make sure you hear a low chime on the attendant, lavatory, and passenger service unit speakers.
8) If you hear a chime on the speakers, then you corrected the fault.

(f) If there is continuity, then continue.

(2) Do this check for power to the no smoking relay:
   (a) Remove the safety tag and close this circuit breaker:

CAPT Electrical System Panel, P18-3

Row	Col	Number	Name
D	11	C00442	PASSENGER CABIN SIGNS PASS SIGN CONT

   (b) Do a check for 28V DC at pins X1, B2 of connector D1620 on the no smoking relay, R25, and structure ground.
   (c) If there is not voltage, then do these steps:
      1) Open this circuit breaker and install safety tag:

CAPT Electrical System Panel, P18-3

Row	Col	Number	Name
D	11	C00442	PASSENGER CABIN SIGNS PASS SIGN CONT

BOEING PROPRIETARY - Copyright © Unpublished Work - See title page for details

2) Repair the wiring between the no smoking relay, R25, and this circuit breaker:

CAPT Electrical System Panel, P18-3

Row	Col	Number	Name
D	11	C00442	PASSENGER CABIN SIGNS PASS SIGN CONT

3) Re-connect electrical connector D1620 to the no smoking relay, R25, in the P6 panel.
4) Set the NO SMOKING switch to the OFF position.
5) Remove the safety tag and close this circuit breaker:

CAPT Electrical System Panel, P18-3

Row	Col	Number	Name
D	11	C00442	PASSENGER CABIN SIGNS PASS SIGN CONT

6) Set the NO SMOKING switch to the ON position.

a) Make sure you hear a chime on the attendant, lavatory, and passenger service unit speakers.

7) If you hear a chime on the speakers, then you corrected the fault.

(d) If there is voltage, then continue.

(3) Do this check of the wiring:

(a) Open these circuit breakers and install safety tags:

CAPT Electrical System Panel, P18-3

Row	Col	Number	Name
D	11	C00442	PASSENGER CABIN SIGNS PASS SIGN CONT

F/O Electrical System Panel, P6-1

Row	Col	Number	Name
D	4	C00082	COMMUNICATIONS PA AMPL BAT

(b) Remove the passenger address (PA) amplifier, M63. To remove it, do this task: Passenger Address (PA) Amplifier Removal, AMM TASK 23-31-01-000-801.

(c) Do a check for continuity between pin B1 of connector D1620 on the no smoking relay, R25, and pin D11 of connector D2639B on the PA amplifier, M63.

(d) If there is not continuity, then do these steps:

1) Repair the wiring.
2) Re-install the PA amplifier, M63. To install it, do this task: Passenger Address (PA) Amplifier Installation, AMM TASK 23-31-01-400-801.
3) Re-connect electrical connector D1620 to the no smoking relay, R25, in the P6 panel.
4) Set the NO SMOKING switch to the OFF position.
5) Remove the safety tags and close these circuit breakers:

CAPT Electrical System Panel, P18-3

Row	Col	Number	Name
D	11	C00442	PASSENGER CABIN SIGNS PASS SIGN CONT

BOEING PROPRIETARY - Copyright © Unpublished Work - See title page for details

F/O Electrical System Panel, P6-1

Row	Col	Number	Name
D	4	C00082	COMMUNICATIONS PA AMPL BAT

6) Set the NO SMOKING switch to the ON position.
   a) Make sure you hear a chime on the attendant, lavatory, and passenger service unit speakers.
7) If you hear a chime on the speakers, then you corrected the fault.

(e) If there is continuity, then continue.
   1) Re-install the PA amplifier, M63. To install it, do this task: Passenger Address (PA) Amplifier Installation, AMM TASK 23-31-01-400-801.

(4) Replace the no smoking relay:
   (a) Replace the no smoking relay, R25.
      1) Re-connect electrical connector D1620 to the no smoking relay, R25, in the P6 panel.
      2) Set the NO SMOKING switch to the OFF position.
      3) Remove the safety tags and close these circuit breakers:

CAPT Electrical System Panel, P18-3

Row	Col	Number	Name
D	11	C00442	PASSENGER CABIN SIGNS PASS SIGN CONT

F/O Electrical System Panel, P6-1

Row	Col	Number	Name
D	4	C00082	COMMUNICATIONS PA AMPL BAT

      4) Set the NO SMOKING switch to the ON position.
         a) Make sure you hear a chime on the attendant, lavatory, and passenger service unit speakers.
      5) If you hear a chime on the speakers, then you corrected the fault.

J. Fault Isolation - Fasten Belts Chime

(1) Do this check of the FASTEN BELTS switch:
   (a) Open this circuit breaker and install safety tag:

CAPT Electrical System Panel, P18-3

Row	Col	Number	Name
D	11	C00442	PASSENGER CABIN SIGNS PASS SIGN CONT

   (b) Disconnect electrical connector D1622 from the fasten belts relay, R26, in the P6 panel.
   (c) Set the FASTEN BELTS switch, on the P5 overhead panel in the flight compartment, to the ON position.
   (d) Do a check for continuity between pin X2 of connector D1622 and structure ground.
   (e) If there is not continuity, then do these steps:
      1) Replace the FASTEN BELTS switch, S46.
      2) Make sure the FASTEN BELTS switch is in the OFF position.
      3) Re-connect electrical connector D1622 to the fasten belts relay, R26, in the P6 panel.

BOEING PROPRIETARY - Copyright © Unpublished Work - See title page for details

4) Remove the safety tag and close this circuit breaker:

CAPT Electrical System Panel, P18-3

Row	Col	Number	Name
D	11	C00442	PASSENGER CABIN SIGNS PASS SIGN CONT

5) Set the FASTEN BELTS switch to the ON position.
   a) Make sure you hear a low chime on the attendant, lavatory, and passenger service unit speakers.
6) If you hear a chime on the speakers, then you corrected the fault.
7) If you did not hear a chime on the speakers, then do these steps:
   a) Set the FASTEN BELTS switch to the OFF position.
   b) Open this circuit breaker and install safety tag:

CAPT Electrical System Panel, P18-3

Row	Col	Number	Name
D	11	C00442	PASSENGER CABIN SIGNS PASS SIGN CONT

   c) Repair the wiring between pin X2 of connector D1622 on the fasten belts relay, R26, and the FASTEN BELTS switch, S46.
   d) Remove the safety tag and close this circuit breaker:

CAPT Electrical System Panel, P18-3

Row	Col	Number	Name
D	11	C00442	PASSENGER CABIN SIGNS PASS SIGN CONT

   e) Set the FASTEN BELTS switch to the ON position.
   f) Make sure you hear a low chime on the attendant, lavatory, and passenger service unit speakers.
8) If you hear a chime on the speakers, then you corrected the fault.

(f) If there is continuity, then continue.

(2) Do this check for power to the fasten belts relay:
   (a) Remove the safety tag and close this circuit breaker:

CAPT Electrical System Panel, P18-3

Row	Col	Number	Name
D	11	C00442	PASSENGER CABIN SIGNS PASS SIGN CONT

   (b) Do a check for 28V DC at pins X1, B2 of connector D1622 on the fasten belts relay, R26, and structure ground.
   (c) If there is not voltage, then do these steps:
      1) Open this circuit breaker and install safety tag:

CAPT Electrical System Panel, P18-3

Row	Col	Number	Name
D	11	C00442	PASSENGER CABIN SIGNS PASS SIGN CONT

BOEING PROPRIETARY - Copyright © Unpublished Work - See title page for details

2) Repair the wiring between the fasten belts relay, R26, and this circuit breaker:

CAPT Electrical System Panel, P18-3

Row	Col	Number	Name
D	11	C00442	PASSENGER CABIN SIGNS PASS SIGN CONT

3) Re-connect electrical connector D1622 to the fasten belts relay, R26, in the P6 panel.
4) Set the FASTEN BELTS switch to the OFF position.
5) Remove the safety tag and close this circuit breaker:

CAPT Electrical System Panel, P18-3

Row	Col	Number	Name
D	11	C00442	PASSENGER CABIN SIGNS PASS SIGN CONT

6) Set the FASTEN BELTS switch to the ON position.
   a) Make sure you hear a chime on the attendant, lavatory, and passenger service unit speakers.
7) If you hear a chime on the speakers, then you corrected the fault.

(d) If there is voltage, then continue.

(3) Do this check of the wiring:

(a) Open these circuit breakers and install safety tags:

CAPT Electrical System Panel, P18-3

Row	Col	Number	Name
D	11	C00442	PASSENGER CABIN SIGNS PASS SIGN CONT

F/O Electrical System Panel, P6-1

Row	Col	Number	Name
D	4	C00082	COMMUNICATIONS PA AMPL BAT

(b) Remove the passenger address (PA) amplifier, M63. To remove it, do this task: Passenger Address (PA) Amplifier Removal, AMM TASK 23-31-01-000-801.

(c) Do a check for continuity between pin B1 of connector D1622 on the fasten belts relay, R26, and pin C11 of connector D2639B on the PA amplifier, M63.

(d) If there is not continuity, then do these steps:
1) Repair the wiring.
2) Re-install the PA amplifier, M63. To install it, do this task: Passenger Address (PA) Amplifier Installation, AMM TASK 23-31-01-400-801.
3) Re-connect electrical connector D1622 to the fasten belts relay, R26, in the P6 panel.
4) Set the FASTEN BELTS switch to the OFF position.
5) Remove the safety tags and close these circuit breakers:

CAPT Electrical System Panel, P18-3

Row	Col	Number	Name
D	11	C00442	PASSENGER CABIN SIGNS PASS SIGN CONT

BOEING PROPRIETARY - Copyright © Unpublished Work - See title page for details

F/O Electrical System Panel, P6-1

Row	Col	Number	Name
D	4	C00082	COMMUNICATIONS PA AMPL BAT

6) Set the FASTEN BELTS switch to the ON position.
   a) Make sure you hear a chime on the attendant, lavatory, and passenger service unit speakers.
7) If you hear a chime on the speakers, then you corrected the fault.

(e) If there is continuity, then continue.
   1) Re-install the PA amplifier, M63. To install it, do this task: Passenger Address (PA) Amplifier Installation, AMM TASK 23-31-01-400-801.

(4) Replace the fasten belts relay:
   (a) Replace the no smoking relay, R26.
      1) Re-connect electrical connector D1622 to the fasten belts relay, R26, in the P6 panel.
      2) Set the FASTEN BELTS switch to the OFF position.
      3) Remove the safety tags and close these circuit breakers:

CAPT Electrical System Panel, P18-3

Row	Col	Number	Name
D	11	C00442	PASSENGER CABIN SIGNS PASS SIGN CONT

F/O Electrical System Panel, P6-1

Row	Col	Number	Name
D	4	C00082	COMMUNICATIONS PA AMPL BAT

      4) Set the FASTEN BELTS switch to the ON position.
         a) Make sure you hear a chime on the attendant, lavatory, and passenger service unit speakers.
      5) If you hear a chime on the speakers, then you corrected the fault.

——————— END OF TASK ———————

805. Passenger Address System Problem - Fault Isolation

A. Description
   (1) No, intermittent, or poor quality audio can be heard from the passenger address (PA) speakers during an announcement.

B. Possible Causes
   (1) Attendant's handset
   (2) Cabin attendant's control panel, P13 (forward) or P14 (aft)
   (3) Wiring
   (4) Passenger address amplifier, M63

C. Circuit Breakers
   (1) (SSM 23-31-11)

BOEING PROPRIETARY - Copyright © Unpublished Work - See title page for details

(2) These are the primary circuit breakers related to the fault:

F/O Electrical System Panel, P6-1

Row	Col	Number	Name
HAP 009, 015-026, 028-054, 101-999; HAP 001-008, 010-013 POST SB 737-23-1139			
C	6	C01583	ENTERTAINMENT PA SYS BAT
HAP ALL			
D	4	C00082	COMMUNICATIONS PA AMPL BAT

F/O Electrical System Panel, P6-2

Row	Col	Number	Name
C	21	C00560	INTERPHONE POWER F/O DC 2
C	22	C00561	INTERPHONE POWER F/O BAT
C	23	C00239	INTERPHONE POWER CAPT DC 2
C	24	C00240	INTERPHONE POWER CAPT BAT
D	21	C00084	INTPH AND WARN
D	22	C00086	AUDIO F/O
D	23	C00083	AUDIO CAPT
D	24	C00085	AUDIO OBS

D. Related Data

(1) (SSM 23-31-11)

(2) (SSM 23-31-12)

(3) (SSM 23-31-13)

(4) (SSM 23-31-14)

(5) (WDM 23-31-01)

(6) (WDM 23-31-02)

(7) (WDM 23-31-03)

(8) (WDM 23-31-04)

(9) (WDM 23-31-06)

E. Fault Isolation Procedure

(1) Do this check of the attendant's handset:

(a) Use an attendant's handset, other than where the problem was reported, to make an announcement over the passenger address system.

1) Make sure you can hear the announcement on the attendant, PSU, and lavatory speakers.

(b) If you can hear the announcement on the speakers, then replace the attendant's handset where the problem was reported.

These are the tasks:

Attendant Handset Removal, AMM TASK 23-42-01-000-801,

Attendant Handset Installation, AMM TASK 23-42-01-400-803.

1) Do the Repair Confirmation at the end of this task.

a) If the Repair Confirmation is not satisfactory, then continue.

BOEING PROPRIETARY - Copyright © Unpublished Work - See title page for details

(c) If you cannot hear the announcement on the speakers, or the announcement is intermittent, then continue.

(2) Replace the applicable cabin attendant's control panel.

These are the tasks:

Attendant's Panel and Components Removal, AMM TASK 25-25-11-000-801,

Attendant's Panel and Components Installation, AMM TASK 25-25-11-400-801.

(a) Do the Repair Confirmation at the end of this task.

1) If the Repair Confirmation is not satisfactory, then continue.

(3) Do this check of the wiring between the passenger address (PA) amplifier and the attendant's handset:

(a) Remove the PA amplifier. To remove it, do this task: Passenger Address (PA) Amplifier Removal, AMM TASK 23-31-01-000-801.

(b) Do a continuity check between the PA amplifier and the attendant panel:

Table 201

ATTENDANT PANEL	PA AMP CONNECTOR		ATTENDANT PANEL CONNECTOR
FORWARD ATTENDANT'S PANEL	D2639B		D10019
	pin A2	————	pin 20
	pin B2	————	pin 21
AFT ATTENDANT'S PANEL	D2639B		D10021
	pin A2	————	pin 20
	pin B2	————	pin 21
LAV D ATTENDANT'S PANEL	D2639B		D10021
	pin A2	————	pin 20
	pin B2	————	pin 21
LAV E ATTENDANT'S PANEL	D2639B		D10021
	pin A2	————	pin 23
	pin B2	————	pin 24

(c) If there is not continuity between these pins, then do these steps:

1) Repair the wiring.

2) Re-install the PA amplifier. To install it, do this task: Passenger Address (PA) Amplifier Installation, AMM TASK 23-31-01-400-801.

3) Do the Repair Confirmation at the end of this task.

(d) If there is continuity between these pins, then continue.

1) Re-install the PA amplifier. To install it, do this task: Passenger Address (PA) Amplifier Installation, AMM TASK 23-31-01-400-801.

(4) Replace the passenger address amplifier, M63.

These are the tasks:

Passenger Address (PA) Amplifier Removal, AMM TASK 23-31-01-000-801,

BOEING PROPRIETARY - Copyright © Unpublished Work - See title page for details

Passenger Address (PA) Amplifier Installation, AMM TASK 23-31-01-400-801.

(a) Do the Repair Confirmation at the end of this task.

F. Repair Confirmation

(1) Do this test of the passenger address system:

(a) Set the attendant's handset to the PA mode.

(b) Push the PTT button on the attendant's handset.

(c) Speak into the attendant's handset.

1) Make sure you can hear the announcement on the other attendant, PSU, and lavatory speakers.

(d) If you can hear the announcement on the speakers, then you corrected the fault.

END OF TASK

806. Passenger Address Speaker Problem - Fault Isolation

A. Description

(1) No, intermittent, or poor quality audio can be heard on one of these passenger address speakers during an announcement:

(a) Attendant

(b) Lavatory

(c) Passenger service unit.

B. Possible Causes

(1) Speaker

(2) Wiring

(3) Remote electronic unit, M1353

C. Related Data

(1) (SSM 23-31-11)

(2) (SSM 23-31-12)

(3) (SSM 23-31-13)

(4) (SSM 23-31-14)

(5) (WDM 23-31-01)

(6) (WDM 23-31-02)

(7) (WDM 23-31-03)

(8) (WDM 23-31-04)

(9) (WDM 23-31-06)

D. Initial Evaluation

(1) Do this test of the passenger address system:

(a) Use a microphone in the flight deck to make an announcement on the passenger address system.

BOEING PROPRIETARY - Copyright © Unpublished Work - See title page for details

1) Make sure you can hear the announcement on the attendant, lavatory, and passenger service unit speakers.

(b) If you cannot hear the announcement on both forward attendant speakers or both aft attendant speakers, then do the Fault Isolation Procedure - Both Attendant Speakers below.

(c) If you cannot hear the announcement, or the quality of the audio is bad, on an attendant speaker, then do the Fault Isolation Procedure - One Attendant Speaker below.

(d) If you cannot hear the announcement, or the quality of the audio is bad, on a lavatory speaker, then do the Fault Isolation Procedure - Lavatory Speaker below.

(e) If you cannot hear the announcement, or the quality of the audio is bad, on a passenger service unit (PSU) speaker, then do the Fault Isolation Procedure - PSU Speaker below.

(f) If you hear the announcement on all speakers, then there was an intermittent fault.

E. Fault Isolation Procedure - Both Attendant Speakers

(1) Replace the remote electronic unit (REU), M1353.

These are the tasks:

Remote Electronics Unit (REU) Removal, AMM TASK 23-51-01-000-801,

Remote Electronics Unit (REU) Installation, AMM TASK 23-51-01-000-802.

(a) Use a microphone in the flight deck to make an announcement over the passenger address system.

1) Make sure you can hear the announcement on both attendant's speakers.

(b) If you heard the announcement on both attendant's speakers, then you corrected the fault.

(c) If you did not hear the announcement on the attendant's speaker, then continue.

(2) Do this check of the wiring:

(a) Remove the remote electronic unit (REU), M1353. To remove it, do this task: Remote Electronics Unit (REU) Removal, AMM TASK 23-51-01-000-801.

(b) Remove the passenger address (PA) amplifier, M63. To remove it, do this task: Passenger Address (PA) Amplifier Removal, AMM TASK 23-31-01-000-801.

(c) Remove the attendant speakers. To remove them, do this task: Attendant Speaker Removal, AMM TASK 23-31-03-000-801.

(d) Do a check for continuity between connector D2501B of the REU, or connector D2639B of the PA amplifier, and the attendant speakers:

Table 202

ATTENDANT SPEAKER	PA OR REU CONNECTOR		ATTENDANT SPEAKER
RIGHT FORWARD ATTENDANT'S SPEAKER (M1464)	D2501B		M1464
	pin H2	———	pin 2K
	D2639B		
	pin B15	———	pin C
LEFT FORWARD ATTENDANT'S SPEAKER (M157)	D2501B		M157
	pin H2	———	pin 2K
	D2639B		

BOEING PROPRIETARY - Copyright © Unpublished Work - See title page for details

(Continued)

ATTENDANT SPEAKER	PA OR REU CONNECTOR		ATTENDANT SPEAKER
	pin B15	———————	pin C
RIGHT AFT ATTENDANT'S SPEAKER (M1212)	D2501B		M1212
	pin C1	———————	pin 2K
	D2639B		
	pin B15	———————	pin C
LEFT AFT ATTENDANT'S SPEAKER (M1213)	D2501B		M1213
	pin C1	———————	pin 2K
	D2639B		
	pin B15	———————	pin C

(e) If there is not continuity between the pins, then do these steps:

1) Repair the wiring.

2) Re-install the speakers. To install them, do this task: Attendant Speaker Installation, AMM TASK 23-31-03-400-801.

3) Re-install the PA amplifier. To install it, do this task: Passenger Address (PA) Amplifier Installation, AMM TASK 23-31-01-400-801.

4) Re-install the REU. To install it, do this task: Remote Electronics Unit (REU) Installation, AMM TASK 23-51-01-000-802.

5) Use a microphone in the flight deck to make an announcement over the passenger address system.

a) Make sure you can hear the announcement on both attendant's speakers.

6) If you heard the announcement on both attendant's speakers, then you corrected the fault.

F. Fault Isolation Procedure - One Attendant Speaker

(1) Replace the attendant speaker.

These are the tasks:

Attendant Speaker Removal, AMM TASK 23-31-03-000-801,

Attendant Speaker Installation, AMM TASK 23-31-03-400-801.

(a) Use a microphone in the flight deck to make an announcement over the passenger address system.

1) Make sure you can hear the announcement on the attendant's speaker.

(b) If you heard the announcement on the attendant's speaker, then you corrected the fault.

(c) If you did not hear the announcement on the attendant's speaker, then continue.

(2) Do this check of the wiring.

(a) Remove the remote electronic unit (REU), M1353. To remove it, do this task: Remote Electronics Unit (REU) Removal, AMM TASK 23-51-01-000-801.

BOEING PROPRIETARY - Copyright © Unpublished Work - See title page for details

(b) Remove the passenger address (PA) amplifier, M63. To remove it, do this task: Passenger Address (PA) Amplifier Removal, AMM TASK 23-31-01-000-801.

(c) Remove the attendant speakers. To remove them, do this task: Attendant Speaker Removal, AMM TASK 23-31-03-000-801.

(d) Do a check for continuity between connector D2501B of the REU, or connector D2639B of the PA amplifier, and the attendant speakers:

Table 203

ATTENDANT SPEAKER	PA OR REU CONNECTOR		ATTENDANT SPEAKER
RIGHT FORWARD ATTENDANT'S SPEAKER (M1464)	D2501B		M1464
	pin H2	———	pin 2K
	D2639B		
	pin B15	———	pin C
LEFT FORWARD ATTENDANT'S SPEAKER (M157)	D2501B		M157
	pin H2	———	pin 2K
	D2639B		
	pin B15	———	pin C
RIGHT AFT ATTENDANT'S SPEAKER (M1212)	D2501B		M1212
	pin C1	———	pin 2K
	D2639B		
	pin B15	———	pin C
LEFT AFT ATTENDANT'S SPEAKER (M1213)	D2501B		M1213
	pin C1	———	pin 2K
	D2639B		
	pin B15	———	pin C

(e) If there is not continuity between the pins, then do these steps:

1) Repair the wiring.

2) Re-install the speakers. To install them, do this task: Attendant Speaker Installation, AMM TASK 23-31-03-400-801.

3) Re-install the PA amplifier. To install it, do this task: Passenger Address (PA) Amplifier Installation, AMM TASK 23-31-01-400-801.

4) Re-install the REU. To install it, do this task: Remote Electronics Unit (REU) Installation, AMM TASK 23-51-01-000-802.

5) Use a microphone in the flight deck to make an announcement over the passenger address system.

a) Make sure you can hear the announcement on both attendant's speakers.

BOEING PROPRIETARY - Copyright © Unpublished Work - See title page for details

6) If you heard the announcement on both attendant's speakers, then you corrected the fault.

G. Fault Isolation Procedure - Lavatory Speaker

(1) Replace the lavatory speaker.

These are the tasks:

Lavatory Speaker Removal, AMM TASK 23-31-05-000-801,

Lavatory Speaker Installation, AMM TASK 23-31-05-400-801.

(a) Use a microphone in the flight deck to make an announcement over the passenger address system.

1) Make sure you can hear the announcement on the lavatory speaker.

(b) If you heard the announcement on the lavatory speaker, then you corrected the fault.

(c) If you did not hear the announcement on the lavatory speaker, then continue.

(2) Do this check of the wiring.

(a) Remove the passenger address (PA) amplifier, M63. To remove it, do this task: Passenger Address (PA) Amplifier Removal, AMM TASK 23-31-01-000-801.

(b) Disconnect electrical connector D3732 from the left forward lavatory module.

(c) Disconnect electrical connector D3738 from the left aft lavatory module.

(d) Disconnect electrical connector D3740 from the right aft lavatory module.

(e) Do a check for continuity between the PA amplifier and the lavatory module connectors:

Table 204

LAVATORY SPEAKER	PA AMP CONNECTOR		LAVATORY MODULE CONNECTOR
LEFT FORWARD LAVATORY SPEAKER	D2639B		D3732
	pin A15	———	pin 13
	pin B15	———	pin 14
LEFT AFT LAVATORY SPEAKER	D2639B		D3738
	pin A15	———	pin 13
	pin B15	———	pin 14
RIGHT AFT LAVATORY SPEAKER	D2639B		D3740
	pin A15	———	pin 13
	pin B15	———	pin 14

(f) If there is not continuity between the pins, then do these steps:

1) Repair the wiring.

2) Re-connect electrical connector D3732 to the left forward lavatory module.

3) Re-connect electrical connector D3738 to the left aft lavatory module.

4) Re-connect electrical connector D3740 to the right aft lavatory module.

5) Re-install the PA amplifier. To install it, do this task: Passenger Address (PA) Amplifier Installation, AMM TASK 23-31-01-400-801.

BOEING PROPRIETARY - Copyright © Unpublished Work - See title page for details

6) Use a microphone in the flight deck to make an announcement over the passenger address system.
   a) Make sure you can hear the announcement on the lavatory speaker.
7) If you heard the announcement on the lavatory speaker, then you corrected the fault.

H. Fault Isolation Procedure - PSU Speaker

(1) Replace the PSU speaker.
   (a) These are the tasks:
      1) Passenger Service Unit (PSU) Speaker Removal, AMM TASK 23-31-02-000-801
      2) Passenger Service Unit (PSU) Speaker Installation, AMM TASK 23-31-02-400-801
   (b) Use a microphone in the flight deck to make an announcement over the passenger address system.
      1) Make sure you can hear the announcement on the PSU speaker.
   (c) If you heard the announcement on the PSU speaker, then you corrected the fault.
   (d) If you did not hear the announcement on the PSU speaker, then continue.

END OF TASK

807. Boarding Music Problem - Fault Isolation

A. Description

(1) The pre-recorded announcement machine (PRAM) does not operate, or the quality of the audio is bad.

B. Possible Causes

(1) Pre-recorded announcement machine (PRAM), M1276 or M1966

(2) Passenger address (PA) amplifier, M63

(3) Wiring

C. Circuit Breakers

(1) These are the primary circuit breakers related to the fault:

F/O Electrical System Panel, P6-1

Row	Col	Number	Name
C	9	C00080	ENTERTAINMENT PA TAPE RPDR AC
D	4	C00082	COMMUNICATIONS PA AMPL BAT

D. Initial Evaluation

HAP 031-054, 101-999

(1) Do a test of the boarding music operation:
   (a) Push the ENT button on the PRAM.
   (b) Push the MUSIC button.
   (c) Push '1' on the PRAM to select channel 1.
   (d) Push the START button.
   (e) Turn the volume control to the middle position.
      1) Make sure you hear clear music on all of the PSU, lavatory, and PA speakers.

BOEING PROPRIETARY - Copyright © Unpublished Work - See title page for details

(f) Turn the volume control clockwise.

1) Make sure the volume level increases at all of the speakers.

(g) Turn the volume control counterclockwise.

1) Make sure the volume level decreases at all of the speakers.

(h) Turn the volume control to the middle position.

(i) Push the STOP button on the tape reproducer.

1) Make sure the boarding music stops.

(j) If the boarding music system did not pass any of the steps above, then do the Fault Isolation Procedure below.

(k) If the boarding music system operated correctly, then there was an intermittent fault.

HAP 006-013, 015-026, 028-030

(2) Do a test of the boarding music operation:

(a) Put test tape part number 980-3022-001 into the pre-recorded announcement machine (PRAM). To install the tape, do this task: Tape Replacement, AMM TASK 23-31-07-900-801.

(b) Touch the applicable selections on the video system control unit (VSCU) to turn on the boarding music.

(c) Adjust the volume so that you can hear the boarding music clearly.

1) Make sure you can hear clear music on the PSU, lavatory, and attendant speakers.

(d) Increase the boarding music volume.

1) Make sure the volume level increases at all of the speakers.

(e) Decrease the boarding music volume.

1) Make sure the volume level decreases at all of the speakers.

(f) Stop the boarding music.

(g) If the boarding music system did not pass one or all of the steps above, then do the Fault Isolation Procedure below.

(h) If the boarding music system operated correctly, then there was an intermittent fault.

HAP ALL

E. Fault Isolation Procedure

(1) Do this test of the boarding music operation:

(a) Set the forward attendant's handset to the PA mode.

(b) Push the PTT button on the forward attendant's handset.

(c) Make an announcement from the forward attendant's handset.

1) Make sure you can hear the announcement on the aft attendant, lavatory, and passenger service unit speakers.

(d) If you heard an announcement on the speakers, then do these steps:

1) Replace the pre-recorded announcement machine (PRAM), M1276 or M1966.

These are the tasks:

BOEING PROPRIETARY - Copyright © Unpublished Work - See title page for details

Pre-Recorded Announcement Machine (PRAM) Removal, AMM TASK 23-31-07-000-801,

Pre-Recorded Announcement Machine (PRAM) Installation, AMM TASK 23-31-07-400-801.

2) Do the Repair Confirmation at the end of this task.

a) If the Repair Confirmation is not satisfactory, then continue.

(e) If you did not hear an announcement on the speakers, then do these steps:

1) Replace the passenger address (PA) amplifier, M63.

These are the tasks:

Passenger Address (PA) Amplifier Removal, AMM TASK 23-31-01-000-801,

Passenger Address (PA) Amplifier Installation, AMM TASK 23-31-01-400-801.

2) Do the Repair Confirmation at the end of this task.

a) If the Repair Confirmation is not satisfactory, then continue.

HAP 031-054, 101-999

(2) Do this check of the wiring:

(a) Remove the passenger address (PA) amplifier, M63. To remove it, do this task: Passenger Address (PA) Amplifier Removal, AMM TASK 23-31-01-000-801.

(b) Remove the pre-recorded announcements machine (PRAM). To remove it, do this task: Pre-Recorded Announcement Machine (PRAM) Removal, AMM TASK 23-31-07-000-801.

(c) Do a check for continuity between these pins of connector D2639B on the PA amplifier, and connector D1507 of the pre-recorded announcement/boarding music tape reproducer:

D2639B		D1507
pin D5	- - - - - - - - - - - - - - - - - -	pin 1
pin A5	- - - - - - - - - - - - - - - - - -	pin 18
pin B5	- - - - - - - - - - - - - - - - - -	pin 17

(d) If there is not continuity between the pins, then do these steps:

1) Repair the wiring.

2) Re-install the PRAM. To install it, do this task: Pre-Recorded Announcement Machine (PRAM) Installation, AMM TASK 23-31-07-400-801.

3) Re-install the PA amplifier. To install it, do this task: Passenger Address (PA) Amplifier Installation, AMM TASK 23-31-01-400-801.

4) Do the Repair Confirmation at the end of this task.

HAP 006-013, 015-026, 028-030

(3) Do this check of the wiring:

(a) Remove the passenger address (PA) amplifier, M63. To remove it, do this task: Passenger Address (PA) Amplifier Removal, AMM TASK 23-31-01-000-801.

(b) Remove the pre-recorded announcements machine (PRAM). To remove it, do this task: Pre-Recorded Announcement Machine (PRAM) Removal, AMM TASK 23-31-07-000-801.

(c) Do a check for continuity between these pins of connector D2639B on the PA amplifier, and connector D10665B of the pre-recorded announcement/boarding music tape reproducer:

BOEING PROPRIETARY - Copyright © Unpublished Work - See title page for details

D2639B		D10665B
pin D5	- - - - - - - - - - - - - - - - - -	pin A8
pin A5	- - - - - - - - - - - - - - - - - -	pin A5
pin B5	- - - - - - - - - - - - - - - - - -	pin B5

(d) If there is not continuity between the pins, then do these steps:

1) Repair the wiring.

2) Re-install the tape reproducer. To install it, do this task: Pre-Recorded Announcement Machine (PRAM) Installation, AMM TASK 23-31-07-400-801.

3) Re-install the PA amplifier. To install it, do this task: Passenger Address (PA) Amplifier Installation, AMM TASK 23-31-01-400-801.

4) Do the Repair Confirmation at the end of this task.

HAP ALL

F. Repair Confirmation

HAP 031-054, 101-999

(1) Do a test of the boarding music operation:

(a) Push the ENT button on the PRAM.

(b) Push the MUSIC button.

(c) Push '1' on the PRAM to select channel 1.

(d) Push the START button.

(e) Turn the volume control to the middle position.

1) Make sure you hear clear music on all of the PSU, lavatory, and PA speakers.

(f) Turn the volume control clockwise.

1) Make sure the volume level increases at all of the speakers.

(g) Turn the volume control counterclockwise.

1) Make sure the volume level decreases at all of the speakers.

(h) Turn the volume control to the middle position.

(i) Push the STOP button on the tape reproducer.

1) Make sure the boarding music stops.

(j) If the boarding music system operated correctly, then you corrected the fault.

HAP 006-013, 015-026, 028-030

(2) Do a test of the boarding music operation:

(a) Put test tape part number 980-3022-001 into the pre-recorded announcement machine (PRAM). To install the tape, do this task: Tape Replacement, AMM TASK 23-31-07-900-801.

(b) Touch the applicable selections on the video system control unit (VSCU) to turn on the boarding music.

(c) Adjust the volume so that you can hear the boarding music clearly.

1) Make sure you can hear clear music on the PSU, lavatory, and attendant speakers.

(d) Increase the boarding music volume.

BOEING PROPRIETARY - Copyright © Unpublished Work - See title page for details

1) Make sure the volume level increases at all of the speakers.

(e) Decrease the boarding music volume.

1) Make sure the volume level decreases at all of the speakers.

(f) Stop the boarding music.

(g) If the boarding music system operated correctly, then you corrected the fault.

END OF TASK

BOEING PROPRIETARY - Copyright © Unpublished Work - See title page for details

801. Passenger Video Monitor Problem - Fault Isolation

A. Description

(1) This procedure is for video monitors that have one of these problems:

(a) The video monitor has been damaged.

(b) Video monitor picture quality is unacceptable.

B. Fault Isolation Procedure

(1) Replace the video monitor.

These are the tasks:

PSU-Mounted LCD Monitor Removal, AMM TASK 23-32-13-000-801,

PSU-Mounted LCD Monitor Installation, AMM TASK 23-32-13-400-801.

END OF TASK

802. Passenger Video Monitor Does Not Operate - Fault Isolation

A. Description

(1) One or several video monitors do not operate.

B. Possible Causes

(1) Video monitor

(2) Video distribution unit (VDU)

(3) Wiring

C. Circuit Breakers

(1) These are the primary circuit breakers related to the fault:

F/O Electrical System Panel, P6-1

Row	Col	Number	Name
C	5	C01450	ENTERTAINMENT VID CONT CENTER DC
C	7	C01451	ENTERTAINMENT VID CONT CENTER AC
D	5	C01452	VIDEO 1
D	6	C01453	VIDEO 2
D	7	C01454	VIDEO 3
D	8	C01455	VIDEO 4

HAP 031-037, 039-041, 047, 049, 050, 054

D	8	C01455	VIDEO 4 (INOP)

HAP ALL

D. Related Data

(1) (WDM 23-32-3X,-4X,-5X,-6X)

(2) (SSM 23-32-3X,-4X,-5X,-6X)

E. Initial Evaluation

(1) Do this test of the passenger video system:

(a) Push the power button on the video system control unit (VSCU) to the on position.

BOEING PROPRIETARY - Copyright © Unpublished Work - See title page for details

(b) Make the applicable selections to display the video from VR 1 on all cabin video monitors.

NOTE: You will make the selections on the VSCU and if it is necessary, on the VR 1.

(c) Make sure the applicable video monitors lower from the stowed position.

(d) Make sure that the video from VR 1 on all of the video monitors.

(e) If you see video from VR 1 on all but one video monitor, then do the Fault Isolation Procedure - Single Video Monitor, below.

(f) If you see the video from VR 1 on all but one row of the monitors or all but two adjacent monitors, then do the Fault Isolation Procedure - Single Row/Adjacent Video Monitors, below.

(g) If you do not see video from VR 1 on the forward zone of video monitors, then do the Fault Isolation Procedure - Forward Monitors, below.

(h) If you do not see video from VR 1 on the aft zone of video monitors, then do the Fault Isolation Procedure - Aft Monitors, below.

(i) If you do not see video from VR 1 on several video monitors, then do the Fault Isolation Procedure - Multiple Video Monitors, below.

(j) If you see video from VR 1 on all video monitors, then there was an intermittent fault.

F. Fault Isolation Procedure - Single Video Monitor

NOTE: You must do the Initial Evaluation before doing this procedure.

(1) Move the affected video monitor to the location of a known good monitor:

NOTE: If the affected video monitor is the forward (retractable) LCD monitor, then skip to the next subtask.

(a) These are the procedures to move the affected monitor. These are the tasks: PSU-Mounted LCD Monitor Removal, AMM TASK 23-32-13-000-801PSU-Mounted LCD Monitor Installation, AMM TASK 23-32-13-400-801.

(b) Repeat the initial evaluation.

(c) If you do not see the video on the affected monitor then re-install the known good monitor in it's original location:

1) These are the procedures to re-install the monitor. These are the tasks: PSU-Mounted LCD Monitor Removal, AMM TASK 23-32-13-000-801PSU-Mounted LCD Monitor Installation, AMM TASK 23-32-13-400-801.

(d) Install a replacement video monitor at the affected monitor's original location.

1) This is the procedure to install the monitor. Do this task: PSU-Mounted LCD Monitor Installation, AMM TASK 23-32-13-400-801.

(e) Do the Repair Confirmation at the end of this task.

1) If the Repair Confirmation is not OK, then continue.

(2) Do these steps to check the video monitor connectors for damage:

(a) Disconnect the electrical connectors from the affected video monitor.

(b) Make sure that there is no damage to the electrical connectors or the pins.

(c) If there is damage to the connectors or pins, then do these steps:

1) Repair the connectors or pins.

2) Reconnect the electrical connectors to the video monitor.

3) Do the Repair Confirmation at the end of this task.

BOEING PROPRIETARY - Copyright © Unpublished Work - See title page for details

a) If the Repair Confirmation is not OK, then continue.

(3) Do these steps to check the video distribution unit (VDU):

(a) Remove the video distribution unit (VDU) for the affected video monitor (WDM 23-32-XX). To remove it, do this task: Video Distribution Unit Removal, AMM TASK 23-32-03-000-801.

(b) Make sure that there is no damage to the electrical connectors or the pins.

(c) If there is damage to the connectors or pins, then do these steps:

1) Repair the connectors or pins.

2) Re-install the VDU. To install it, do this task: Video Distribution Unit Installation, AMM TASK 23-32-03-400-801.

3) Do the Repair Confirmation at the end of this task.

a) If the Repair Confirmation was not OK, then continue.

(d) If there is no damage to the connectors or pins, then do these steps:

1) Install a new VDU in the affected VDU's original location. To install it, do this task: Video Distribution Unit Installation, AMM TASK 23-32-03-400-801.

2) Do the Repair Confirmation at the end of this task.

a) If the Repair Confirmation is not OK, then continue.

(4) Do this check of the wiring:

(a) Remove the affected video monitor. To remove it, do this task: PSU-Mounted LCD Monitor Removal, AMM TASK 23-32-13-000-801.

(b) Remove the VDU for the affected monitor (WDM 23-32-XX). To remove it, do this task: Video Distribution Unit Removal, AMM TASK 23-32-03-000-801.

(c) Do a check for continuity of all wiring between the video monitor and the VDU (WDM 23-32-XX).

(d) If there is not continuity, then do these steps:

1) Repair the wiring.

2) Re-install the VDU. To install it, do this task: Video Distribution Unit Installation, AMM TASK 23-32-03-400-801.

3) Re-install the video monitor. To install it, do this task: PSU-Mounted LCD Monitor Installation, AMM TASK 23-32-13-400-801.

4) Do the Repair Confirmation at the end of this task.

G. Fault Isolation Procedure - Single Row/Adjacent Video Monitors

NOTE: You must do the Initial Evaluation before doing this procedure.

(1) Replace the video distribution unit (VDU) for the affected video monitors.

These are the tasks:

Video Distribution Unit Removal, AMM TASK 23-32-03-000-801,

Video Distribution Unit Installation, AMM TASK 23-32-03-400-801.

(a) Do the Repair Confirmation at the end of this task.

1) If the Repair Confirmation is not OK, then continue.

(2) Do this check of the wiring:

(a) Remove the VDU for the affected video monitors (WDM 23-32-XX). To remove it, do this task: Video Distribution Unit Removal, AMM TASK 23-32-03-000-801.

BOEING PROPRIETARY - Copyright © Unpublished Work - See title page for details

(b) Remove the VDU for the forward video monitors (WDM 23-32-XX). To remove it, do this task: Video Distribution Unit Removal, AMM TASK 23-32-03-000-801.

(c) Make sure that there is no damage to the electrical connectors or the pins on both VDUs.

(d) If there is damage to the connectors or pins, then do these steps:

1) Repair the connectors or pins.

2) Re-install both VDUs. To install them, do this task: Video Distribution Unit Installation, AMM TASK 23-32-03-400-801.

3) Do the Repair Confirmation at the end of this task.

a) If the Repair Confirmation is not OK, then continue.

(e) If there is no damage to the connectors or pins, then do these steps:

1) Do a check for continuity of the wiring between the VDUs.

2) If there is not continuity then do these steps:

a) Repair the wiring.

b) Re-install both VDUs. To install them, do this task: Video Distribution Unit Installation, AMM TASK 23-32-03-400-801.

c) Do the Repair Confirmation at the end of this task.

H. Fault Isolation Procedure - Forward Monitors

(1) Replace the first video distribution unit (VDU) of the forward zone.

These are the tasks:

Video Distribution Unit Removal, AMM TASK 23-32-03-000-801,

Video Distribution Unit Installation, AMM TASK 23-32-03-400-801.

(a) Do the Repair Confirmation at the end of this task.

1) If the Repair Confirmation is not OK, then continue.

(2) Do this check of the wiring:

(a) Remove the first VDU, M1934. To remove it, do this task: Video Distribution Unit Removal, AMM TASK 23-32-03-000-801.

(b) Remove the video system control unit (VSCU). To remove it, do this task: Video System Control Unit Removal, AMM TASK 23-32-02-000-801-001.

(c) Do a check for continuity of the wiring between the VSCU and the VDU.

(d) If there is not continuity, then do these steps:

1) Repair the wiring.

2) Re-install the VSCU. To install it, do this task: Video System Control Unit Installation, AMM TASK 23-32-02-400-801-001.

3) Re-install the VDU. To install it, do this task: Video Distribution Unit Installation, AMM TASK 23-32-03-400-801.

4) Do the Repair Confirmation at the end of this task.

I. Fault Isolation Procedure - Aft Monitors

(1) Replace the first video distribution unit (VDU) of the aft zone.

These are the tasks:

Video Distribution Unit Removal, AMM TASK 23-32-03-000-801,

Video Distribution Unit Installation, AMM TASK 23-32-03-400-801.

BOEING PROPRIETARY - Copyright © Unpublished Work - See title page for details

(a) Do the Repair Confirmation at the end of this task.

1) If the Repair Confirmation is not OK, then continue.

(2) Do this check of the wiring:

(a) Remove the first VDU of the aft zone. To remove it, do this task: Video Distribution Unit Removal, AMM TASK 23-32-03-000-801.

(b) Remove the video system control unit (VSCU). To remove it, do this task: Video System Control Unit Removal, AMM TASK 23-32-02-000-801-001.

(c) Do a check for continuity of the wiring between the VSCU and the VDU.

(d) If there is not continuity, then do these steps:

1) Repair the wiring.

2) Re-install the VSCU. To install it, do this task: Video System Control Unit Installation, AMM TASK 23-32-02-400-801-001.

3) Re-install the VDU. To install it, do this task: Video Distribution Unit Installation, AMM TASK 23-32-03-400-801.

4) Do the Repair Confirmation at the end of this task.

J. Fault Isolation Procedure - Multiple Video Monitors

(1) Replace the video distribution unit (VDU) for the affected video monitor closest to the front of the airplane (WDM 23-32-XX).

These are the tasks:

Video Distribution Unit Removal, AMM TASK 23-32-03-000-801,

Video Distribution Unit Installation, AMM TASK 23-32-03-400-801.

(a) Do the Repair Confirmation at the end of this task.

1) If the Repair Confirmation is not OK, then continue.

(2) Do this check of the wiring:

(a) Remove the VDU for the affected video monitor closest to the front of the airplane (WDM 23-32-XX). To remove it, do this task: Video Distribution Unit Removal, AMM TASK 23-32-03-000-801.

(b) Remove the VDU for the video monitor in front of the affected video monitors (WDM 23-32-XX). To remove it, do this task: Video Distribution Unit Removal, AMM TASK 23-32-03-000-801.

(c) Do a check for continuity of the wiring between both VDUs.

(d) If there is not continuity, then do these steps:

1) Repair the wiring.

2) Re-install both VDUs. To install them, do this task: Video Distribution Unit Installation, AMM TASK 23-32-03-400-801.

3) Do the Repair Confirmation at the end of this task.

K. Repair Confirmation

(1) Do this test of the passenger video system:

(a) Make the applicable selections to display the video from VR 1 on the cabin monitors.

NOTE: You will make the selections on the VSCU and if necessary, on the VR 1.

1) Make sure the applicable video monitors lower from the stowed position.

BOEING PROPRIETARY - Copyright © Unpublished Work - See title page for details

(b) Look for the video display on all of the video monitors.

(c) If you see the video on all of the video monitors then you corrected the fault.

END OF TASK

803. Video Reproducer Problems - Fault Isolation

A. Description

(1) A video reproducer (VR) has one of these problems:

(a) VR does not turn on

(b) VR controls do not operate

B. Possible Causes

HAP 031-054, 101-999

(1) Video Reproducer

HAP 001-013, 015-026, 028-030

(2) Video Reproducers

HAP ALL

(3) Connectors or pins

(4) Video system control unit (VSCU), M2065

(5) Wiring

C. Circuit Breakers

(1) These are the primary circuit breakers related to the fault:

F/O Electrical System Panel, P6-1

Row	Col	Number	Name
C	5	C01450	ENTERTAINMENT VID CONT CENTER DC
C	7	C01451	ENTERTAINMENT VID CONT CENTER AC

D. Related Data

(1) (WDM 23-32-11)

(2) (SSM 23-32-11)

E. Initial Evaluation

(1) Do this test of the video reproducer:

(a) Push the power button on the video system control unit (VSCU) to the on position.

1) Make sure the power light on the video reproducer (VR) comes on.

(b) If the light on the VR does not come on, then do the Fault Isolation Procedure - VR Does Not Turn On below.

(c) If the light does come on, then continue.

(d) Put a media source (tape, CD, or DVD) into the VR if necessary.

(e) Make the applicable selections to display the video from VR 1 on the VSCU preview monitor.

NOTE: You will make the selections on the VSCU and if it is necessary, on the VR 1.

BOEING PROPRIETARY - Copyright © Unpublished Work - See title page for details

1) Make sure that you see video from the VR on the VSCU preview monitor.

(f) If the VR plays but you do not see video from the VR on the VSCU preview monitor, then do the Fault Isolation Procedure - No Video From VR below.

(g) If the VR plays but you do not see video from the VR on the monitors, then do the Fault Isolation Procedure - No Video From VR below.

(h) If the VR does not play, or any other attempt to control the media source (tape, CD, or DVD) does not work, then do the Fault Isolation Procedure - VR Controls Do Not Operate below.

(i) If you see video from the VR on the VSCU preview monitor, then there was an intermittent fault.

(j) If you see video from the VR on the monitors, then there was an intermittent fault.

F. Fault Isolation Procedure - VR Does Not Turn On

(1) Do this check for power:

(a) Remove the VR. To remove it, do this task: Video Reproducer Removal, AMM TASK 23-32-01-000-801.

(b) Remove the safety tag and close this circuit breaker:

F/O Electrical System Panel, P6-1

Row	Col	Number	Name
C	7	C01451	ENTERTAINMENT VID CONT CENTER AC

(c) Do a check for 115V AC on pins 1 and 2 of the VR connector.

(d) If you do not find the 115V AC, then do these steps:

1) Examine and repair the wiring between the video system control unit (VSCU) and the VR.

(e) If you found and repaired a wire problem,then do these steps:

1) Re-install the VR. To install it, do this task: Video Reproducer Installation, AMM TASK 23-32-01-400-801.

2) Do the Repair Confirmation at the end of this procedure.

a) If the Repair Confirmation is not OK, then continue.

(f) If the 115V AC is OK, then do a check for 28V DC on pins 3 and 4 of the VR connector.

(g) If there is not 28V DC, then do these steps:

1) Repair the wiring between the video system control unit (VSCU) and the VR.

2) Re-install the VR. To install it, do this task: Video Reproducer Installation, AMM TASK 23-32-01-400-801.

3) Do the Repair Confirmation at the end of this procedure.

a) If the Repair Confirmation is not OK, then continue.

(h) If there is 28V DC, then continue.

HAP 001-013, 015-026, 028-030

(2) Move the VR to another location:

(a) Remove a working VR from another location. To remove it, do this task: Video Reproducer Removal, AMM TASK 23-32-01-000-801.

(b) Install the affected VR at the working VR's location. To install it, do this task: Video Reproducer Installation, AMM TASK 23-32-01-400-801.

BOEING PROPRIETARY - Copyright © Unpublished Work - See title page for details

(c) Make the selections to show video from the affected VR, in the new location, on the VSCU preview monitor.

1) Make sure you see video from the VR on the VSCU preview monitor.

(d) If you do not see video from the VR on the VSCU preview monitor, then do these steps:

1) Remove the affected VR. To remove it, do this task: Video Reproducer Removal, AMM TASK 23-32-01-000-801.

2) Re-install the working VR into its original location. To install it, do this task: Video Reproducer Installation, AMM TASK 23-32-01-400-801.

3) Install a new VR into the affected VR's original location. To install it, do this task: Video Reproducer Installation, AMM TASK 23-32-01-400-801.

4) Do the Repair Confirmation at the end of this task.

a) If the Repair Confirmation is not OK, then continue.

(e) If you do see video from the VR on the VSCU preview monitor, then continue.

HAP ALL

(3) Do these steps to check the VR and VSCU connectors for damage:

(a) Remove the VR. To remove it, do this task: Video Reproducer Removal, AMM TASK 23-32-01-000-801.

(b) Remove the VSCU. To remove it, do this task: Video System Control Unit Removal, AMM TASK 23-32-02-000-801-001.

(c) Make sure that there is no damage to the electrical connectors or the pins.

(d) If there is damage to the connectors or pins, then do these steps:

1) Repair the connectors or pins.

2) Re-install the VSCU. To install it, do this task: Video System Control Unit Installation, AMM TASK 23-32-02-400-801-001.

3) Re-install the VR. To install it, do this task: Video Reproducer Installation, AMM TASK 23-32-01-400-801.

4) Do the Repair Confirmation at the end of this task.

a) If the Repair Confirmation is not OK, then continue.

(e) If there is no damage to the connectors or pins, then continue.

(4) Do this check of the wiring:

(a) Remove the VR. To remove it, do this task: Video Reproducer Removal, AMM TASK 23-32-01-000-801.

(b) Remove the VSCU. To remove it, do this task: Video System Control Unit Removal, AMM TASK 23-32-02-000-801-001.

(c) Do a check for continuity of the wiring between the VR and the VSCU.

(d) If there is not continuity, then do these steps:

1) Repair the wiring.

2) Re-install the VSCU. To install it, do this task: Video System Control Unit Installation, AMM TASK 23-32-02-400-801-001.

3) Re-install the VR. To install it, do this task: Video Reproducer Installation, AMM TASK 23-32-01-400-801.

BOEING PROPRIETARY - Copyright © Unpublished Work - See title page for details

4) Do the Repair Confirmation at the end of this task.
   a) If the Repair Confirmation is not OK, then continue.

(e) If there is continuity, then continue.

(5) Replace the video system control unit (VSCU), M2065.

These are the tasks:

Video System Control Unit Removal, AMM TASK 23-32-02-000-801-001,

Video System Control Unit Installation, AMM TASK 23-32-02-400-801-001.

(a) Do the Repair Confirmation at the end of this task.

G. Fault Isolation Procedure - No Video From VR

(1) Do this check of the wiring:

(a) Remove the video reproducer (VR). To remove it, do this task: Video Reproducer Removal, AMM TASK 23-32-01-000-801.

(b) Remove the video system control unit (VSCU). To remove it, do this task: Video System Control Unit Removal, AMM TASK 23-32-02-000-801-001.

(c) Make sure that there is no damage to the electrical connectors or the pins.

(d) If there is damage to the connectors or pins, then do these steps:

1) Repair the connectors or pins.

2) Re-install the VSCU. To install it, do this task: Video System Control Unit Installation, AMM TASK 23-32-02-400-801-001.

3) Re-install the VR. To install it, do this task: Video Reproducer Installation, AMM TASK 23-32-01-400-801.

4) Do the Repair Confirmation at the end of this task.
   a) If the Repair Confirmation is not OK, then continue.

(e) If there is no damage to the connectors or pins, then do these steps:

(f) Do a check for continuity between these pins of the VR and the VSCU:

	VR	
	VR Connector	**VSCU Connector**
VR 1	**D10659**	**D10667**
	pin 30 - - - - - - - - - - - - - - - - - - -	pin 1
	pin 30 - - - - - - - - - - - - - - - - - - -	pin 1
VR 2 (if installed)	**D10661**	**D10667**
	pin 30 - - - - - - - - - - - - - - - - - - -	pin 2
	pin 30 - - - - - - - - - - - - - - - - - - -	pin 2

HAP 001-013, 015-026, 028-030

(g) If there is not continuity, then do these steps:

1) Repair the wiring.

2) Re-install the VSCU. To install it, do this task: Video System Control Unit Installation, AMM TASK 23-32-02-400-801-001.

3) Re-install the VR. To install it, do this task: Video Reproducer Installation, AMM TASK 23-32-01-400-801.

4) Do the Repair Confirmation at the end of this task.

BOEING PROPRIETARY - Copyright © Unpublished Work - See title page for details

a) If the Repair Confirmation is not OK, then continue.

(h) If there is continuity, then continue.

HAP ALL

(2) Replace the VR.

These are the tasks:

Video Reproducer Removal, AMM TASK 23-32-01-000-801,

Video Reproducer Installation, AMM TASK 23-32-01-400-801.

(a) Do the Repair Confirmation at the end of this task.

1) If the Repair Confirmation is not OK, then continue.

(3) Replace the VSCU.

These are the tasks:

Video System Control Unit Removal, AMM TASK 23-32-02-000-801-001,

Video System Control Unit Installation, AMM TASK 23-32-02-400-801-001.

(a) Do the Repair Confirmation at the end of this task.

1) If the Repair Confirmation is not OK, then continue.

H. Fault Isolation Procedure - VR Controls Do Not Operate

(1) Do this check of the connectors:

(a) Remove the VR. To remove it, do this task: Video Reproducer Removal, AMM TASK 23-32-01-000-801.

(b) Remove the video system control unit (VSCU). To remove it, do this task: Video System Control Unit Removal, AMM TASK 23-32-02-000-801-001.

(c) Make sure that there is no damage to the electrical connectors or the pins.

(d) If there is damage to the connectors or pins, then do these steps:

1) Repair the connectors or pins.

2) Re-install the VSCU. To install it, do this task: Video System Control Unit Installation, AMM TASK 23-32-02-400-801-001.

3) Re-install the VR. To install it, do this task: Video Reproducer Installation, AMM TASK 23-32-01-400-801.

4) Do the Repair Confirmation at the end of this task.

a) If the Repair Confirmation is not OK, then continue.

(e) If there is no damage to the connectors or pins, then continue.

(2) Do this check of the wiring:

(a) Do a check for continuity between these pins of the VR and the VSCU:

	VR	
	VR Connector	**VSCU Connector**
VR 1	**D10659**	**D10673**
	pin 6 - - - - - - - - - - - - - - - - - - -	pin 38
	pin 7 - - - - - - - - - - - - - - - - - - -	pin 38

BOEING PROPRIETARY - Copyright © Unpublished Work - See title page for details

VR 1	**D10659**	**D10675**
	pin 19 - - - - - - - - - - - - - - - - - - -	pin 1
	pin 20 - - - - - - - - - - - - - - - - - - -	pin 2
VR 2 (If installed)	**D10661**	**D10673**
	pin 6 - - - - - - - - - - - - - - - - - - -	pin 38
	pin 7 - - - - - - - - - - - - - - - - - - -	pin 38
VR 2 (If installed)	**D10661**	**D10675**
	pin 19 - - - - - - - - - - - - - - - - - - -	pin 4
	pin 200 - - - - - - - - - - - - - - - - - - -	pin 5

(b) If there is not continuity, then do these steps:

1) Repair the wiring.

2) Re-install the VSCU. To install it, do this task: Video System Control Unit Installation, AMM TASK 23-32-02-400-801-001.

3) Re-install the VR. To install it, do this task: Video Reproducer Installation, AMM TASK 23-32-01-400-801.

4) Do the Repair Confirmation at the end of this task.

a) If the Repair Confirmation is not OK, then continue.

(3) Replace the VR.

These are the tasks:

Video Reproducer Removal, AMM TASK 23-32-01-000-801,

Video Reproducer Installation, AMM TASK 23-32-01-400-801.

(a) Do the Repair Confirmation at the end of this task.

1) If the Repair Confirmation is not OK, then continue.

(4) Replace the VSCU.

These are the tasks:

Video System Control Unit Removal, AMM TASK 23-32-02-000-801-001,

Video System Control Unit Installation, AMM TASK 23-32-02-400-801-001.

(a) Do the Repair Confirmation at the end of this task.

I. Repair Confirmation

(1) Do this test of the video reproducer:

(a) Push the power button on the video system control unit (VSCU) to the on position.

(b) Put a media source (tape, CD, or DVD) into the VR if necessary.

(c) Make the applicable selections to display the video from VR 1 on the VSCU preview monitor.

NOTE: You will make the selections on the VSCU and if it is necessary, on the VR 1.

1) Make sure that you see video from the VR on the VSCU preview monitor.

(d) If you see video from the VR on the VSCU preview monitor, then you corrected the fault.

END OF TASK

BOEING PROPRIETARY - Copyright © Unpublished Work - See title page for details

804. Video Reproducer Video Quality Problem - Fault Isolation

A. Description

(1) The quality of the video from a video reproducer (VR) is not acceptable.

B. Fault Isolation Procedure

(1) Replace the video reproducer.
These are the tasks:
Video Reproducer Removal, AMM TASK 23-32-01-000-801,
Video Reproducer Installation, AMM TASK 23-32-01-400-801.

END OF TASK

805. Video Reproducer Audio Quality Problem - Fault Isolation

A. Description

(1) The quality of the audio from a video reproducer (VR) is not acceptable.

B. Possible Causes

HAP 031-054, 101-999

(1) Video reproducer (VR)

HAP 001-013, 015-026, 028-030

(2) Video reproducers

HAP ALL

(3) Audio multiplexer, M1956

(4) Wiring

C. Circuit Breakers

(1) These are the primary circuit breakers related to the fault:

F/O Electrical System Panel, P6-1

Row	Col	Number	Name
C	7	C01451	ENTERTAINMENT VID CONT CENTER AC
C	8	C01456	ENTERTAINMENT AUDIO

D. Related Data

(1) (WDM 23-32-31, 23-34-01)

(2) (SSM 23-32-11, 23-34-01)

E. Initial Evaluation

(1) Do this test of the video reproducer:

(a) Push the ENTERTAINMENT IFE button on the forward attendant's panel to the on position.

(b) Push the power button on the video system control unit (VSCU) to the on position.

(c) Connect headphones to the headphone jack on the VSCU.

(d) Put a media source (tape, CD, or DVD) into the VR.

BOEING PROPRIETARY - Copyright © Unpublished Work - See title page for details

(e) Make the applicable selections to display the video from the VR on all passenger video monitors, the VSCU preview monitor, and the audio on the PA system.

NOTE: You will make the selections on the VSCU and if it is necessary, on the VR.

1) Make sure you hear clear audio on the headphones connected to the VSCU.

2) Make sure you hear clear audio on the passenger address (PA) speakers.

(f) If you do not hear clear audio on the headphones connected to the VSCU, do the Fault Isolation Procedure - VR Problem below.

(g) If you hear clear audio on the headphones connected to the VSCU, but do not hear clear audio on the PA speakers, then do the Fault Isolation Procedure - Multiplexer Problem below.

(h) If you hear clear audio on the headphones connected to the VSCU and on the PA speakers, then there was an intermittent problem.

F. Fault Isolation Procedure - VR Problem

NOTE: You must do the Initial Evaluation in this task before you do this procedure.

HAP 001-013, 015-026, 028-030

(1) Move the VR to a different location:

(a) Remove the affected VR. To remove it, (AMM TASK 23-32-01-000-801).

(b) Remove a working VR. To remove it, (AMM TASK 23-32-01-000-801).

(c) Install the affected VR in the working VR's original location. To install it, (AMM TASK 23-32-01-400-801).

(d) Make the applicable selections to display the video from VR 1 on the VSCU preview monitor.

NOTE: You will make the selections on the VSCU and if it is necessary, on the VR 1.

(e) Make sure you hear clear audio on the headphones connected to the VSCU.

(f) If you do not hear clear audio on the headphones connected to the VSCU, then do these steps:

1) Remove the affected VR. To remove it, (AMM TASK 23-32-01-000-801).

2) Re-install the working VR to its original location. To install it, (AMM TASK 23-32-01-400-801).

3) Install a new VR in the affected VR's original location. To install it, (AMM TASK 23-32-01-400-801).

4) Do the Repair Confirmation at the end of this task.

a) If the Repair Confirmation is not OK, then continue.

(g) If you do hear clear audio on the headphones connected to the VSCU, then do these steps and then continue:

1) Remove the affected VR. To remove it, (AMM TASK 23-32-01-000-801).

2) Re-install the working VR in its original location. To install it, (AMM TASK 23-32-01-400-801).

HAP 031-054, 101-999

(2) Replace the VR.

These are the tasks:

Video Reproducer Removal, AMM TASK 23-32-01-000-801,

BOEING PROPRIETARY - Copyright © Unpublished Work - See title page for details

Video Reproducer Installation, AMM TASK 23-32-01-400-801.

(a) Do the Repair Confirmation at the end of this task.

1) If the Repair Confirmation is not OK, then continue.

HAP ALL

(3) Do this check of the wiring:

(a) Remove the video system control unit (VSCU). To remove it, (AMM TASK 23-32-02-000-801-001).

(b) Do a check of the wiring between the VR and the VSCU (WDM 23-32-31).

(c) If there is a problem with the wiring, then do these steps:

1) Repair the wiring.

2) Re-install the VSCU. To install it, (AMM TASK 23-32-02-400-801-001).

3) Re-install the VR. To install it, (AMM TASK 23-32-01-400-801).

4) Do the Repair Confirmation at the end of this task.

G. Fault Isolation Procedure - Multiplexer Problem

(1) Replace the audio multiplexer, M1956.

These are the tasks:

Audio Multiplexer Removal, AMM TASK 23-34-02-000-801,

Audio Multiplexer Installation, AMM TASK 23-34-02-400-801.

(a) Do the Repair Confirmation at the end of this task.

1) If the Repair Confirmation is not OK, then continue.

(2) Do this check of the wiring:

(a) Remove the video system control unit (VSCU), M2065. To remove it, do this task: Video System Control Unit Removal, AMM TASK 23-32-02-000-801-001.

(b) Remove the audio multiplexer, M1956. To remove it, do this task: Audio Multiplexer Removal, AMM TASK 23-34-02-000-801.

(c) Do a check for continuity of the wiring between the VSCU and the audio multiplexer (WDM 23-32-31).

(d) If there is not continuity, then do these steps:

1) Repair the wiring.

2) Re-install the audio multiplexer, M1956. To install it, (AMM TASK 23-34-02-400-801).

3) Re-install the VSCU, M2065. To install it, (AMM TASK 23-32-02-400-801-001).

4) Do the Repair Confirmation at the end of this task.

H. Repair Confirmation

(1) Do this test of the video reproducer (VR):

(a) Push the ENTERTAINMENT IFE button on the forward attendant's panel to the on position.

(b) Push the power button on the video system control unit (VSCU) to the on position.

(c) Connect headphones to the headphone jack on the VSCU.

(d) Put a media source (tape, CD, or DVD) into the VR.

BOEING PROPRIETARY - Copyright © Unpublished Work - See title page for details

(e) Make the applicable selections to display the video from the VR on the VSCU preview monitor.

NOTE: You will make the selections on the VSCU and if it is necessary, on the VR.

1) Make sure you hear clear audio on the headphones connected to the VSCU.

2) Make sure you hear clear audio on the PA speakers.

(f) If you hear clear audio on the headphones connected to the VSCU and on the PA speakers, then you corrected the fault.

END OF TASK

HAP 001-013, 015-026, 028-054, 104-999

806. Airshow Does Not Operate - Fault Isolation

A. Description

(1) The airshow system does not operate.

B. Possible Causes

HAP 001-013, 015-026, 028-030

(1) Airshow compact disc

HAP 001-013, 015-026, 028-054, 104-999

(2) Connectors and pins

(3) Digital interface unit (DIU), M1499

(4) Video system control unit (VSCU), M2065

(5) Wiring

C. Circuit Breakers

(1) This is the primary circuit breaker related to the fault:

F/O Electrical System Panel, P6-1

Row	Col	Number	Name
C	5	C01450	ENTERTAINMENT VID CONT CENTER DC

D. Related Data

(1) (WDM 23-32-21)

E. Initial Evaluation

(1) Do this test of the airshow system:

(a) Push the power button on the video system control unit (VSCU) to the on position.

(b) Make the selections on the VSCU to show video from the airshow system on the VSCU preview monitor.

1) Make sure you see video from the airshow system on the VSCU preview monitor.

(c) If you do not see video from the airshow system, then do the Fault Isolation Procedure below.

(d) If you do see video from the airshow system, then there was an intermittent fault.

BOEING PROPRIETARY - Copyright © Unpublished Work - See title page for details

F. Fault Isolation Procedure

HAP 001-013, 015-026, 028-030

(1) Do this check for a compact disc (CD):

(a) Push the button on the digital interface unit (DIU) to eject the CD caddy.

1) Make sure a CD is installed in the CD caddy.

(b) If there is no CD installed in the CD caddy, then do these steps:

1) Install an airshow CD into the caddy.

2) Put the CD caddy into the DIU.

3) Open this circuit breaker and install safety tag:

F/O Electrical System Panel, P6-1

Row	Col	Number	Name
C	5	C01450	ENTERTAINMENT VID CONT CENTER DC

4) Wait at least 10 seconds.

5) Remove the safety tag and close this circuit breaker:

F/O Electrical System Panel, P6-1

Row	Col	Number	Name
C	5	C01450	ENTERTAINMENT VID CONT CENTER DC

6) Do the Repair Confirmation at the end of this task.

a) If the Repair Confirmation is not OK, then continue.

(c) If there is a CD installed, then continue.

HAP 001-013, 015-026, 028-054, 104-999

(2) Do this check of the connectors and pins:

(a) Remove the VSCU. To remove it, do this task: Video System Control Unit Removal, AMM TASK 23-32-02-000-801-001.

(b) Remove the DIU. To remove it, do this task: Digital Interface Unit (DIU) Removal, AMM TASK 23-32-06-000-804.

(c) Check the connectors and pins for damage.

(d) If there is damage to the connectors or pins, then do these steps:

1) Repair the connectors or pins.

2) Re-install the DIU. To install it, do this task: Digital Interface Unit (DIU) Installation, AMM TASK 23-32-06-400-801.

3) Re-install the VSCU. To install it, do this task: Video System Control Unit Installation, AMM TASK 23-32-02-400-801-001.

4) Do the Repair Confirmation at the end of this task.

a) If the Repair Confirmation is not OK, then continue.

(e) If there is no damage to the connectors or pins, do these steps and continue:

1) Re-install the DIU. To install it, do this task: Digital Interface Unit (DIU) Installation, AMM TASK 23-32-06-400-801.

BOEING PROPRIETARY - Copyright © Unpublished Work - See title page for details

2) Re-install the VSCU. To install it, do this task: Video System Control Unit Installation, AMM TASK 23-32-02-400-801-001.

(3) Replace the DIU. These are the tasks:
- Digital Interface Unit (DIU) Removal, AMM TASK 23-32-06-000-804
- Digital Interface Unit (DIU) Installation, AMM TASK 23-32-06-400-801

(a) Do the Repair Confirmation at the end of this task.

1) If the Repair Confirmation is not OK, then continue.

(4) Replace the VSCU. These are the tasks:
- Video System Control Unit Removal, AMM TASK 23-32-02-000-801-001
- Video System Control Unit Installation, AMM TASK 23-32-02-400-801-001

(a) Do the Repair Confirmation at the end of this task.

1) If the Repair Confirmation is not OK, then continue.

(5) Do this check of the wiring:

(a) Remove the VSCU. To remove it, do this task: Video System Control Unit Removal, AMM TASK 23-32-02-000-801-001.

(b) Remove the DIU. To remove it, do this task: Digital Interface Unit (DIU) Removal, AMM TASK 23-32-06-000-804.

(c) Do a check for continuity of the wiring between the DIU and the VSCU (WDM 23-32-21).

(d) If there is not continuity, then do these steps:

1) Repair the wiring.

2) Re-install the DIU. To install it, do this task: Digital Interface Unit (DIU) Installation, AMM TASK 23-32-06-400-801.

3) Re-install the VSCU. To install it, do this task: Video System Control Unit Installation, AMM TASK 23-32-02-400-801-001.

4) Do the Repair Confirmation at the end of this task.

G. Repair Confirmation

(1) Do this test of the airshow system:

(a) Push the power button on the video system control unit (VSCU) to the on position.

(b) Make the selections on the VSCU to show video from the airshow system on the VSCU preview monitor.

1) Make sure you see video from the airshow system on the VSCU preview monitor.

(c) If you see video from the airshow system, then you corrected the fault.

END OF TASK

BOEING PROPRIETARY - Copyright © Unpublished Work - See title page for details

801. Damaged Passenger Control Unit - Fault Isolation

A. Description

(1) The passenger control unit (PCU) at a seat has been damaged or is not controllable.

B. Fault Isolation Procedure

(1) Replace the passenger control unit (PCU).
These are the tasks:
Passenger Control Unit Removal, AMM TASK 23-34-11-000-801,
Passenger Control Unit Installation, AMM TASK 23-34-11-400-801.

END OF TASK

802. Seat Audio Problems - Fault Isolation

A. Description

(1) The passenger entertainment audio cannot be heard, or is of unacceptable quality, at one or many seats.

B. Possible Causes

(1) Audio system configuration

(2) Passenger control unit (PCU)

(3) Wiring

(4) Seat electronic box (SEB)

(5) Audio multiplexer, M1956

C. Circuit Breakers

(1) These are the primary circuit breakers related to the fault:

F/O Electrical System Panel, P6-1

Row	Col	Number	Name
HAP 009, 015-026, 028-054, 101-999; HAP 001-008, 010-013 POST SB 737-23-1139			
B	10	C01584	ENTERTAINMENT AUDIO DC
HAP ALL			
C	8	C01456	ENTERTAINMENT AUDIO
HAP 001-013, 015-026, 028-030			
C	10	C01101	ENTERTAINMENT MUX

HAP ALL

D. Related Data

(1) (WDM 23-34-01, 23-34-02)

E. Initial Evaluation

HAP ALL; AIRPLANES WITHOUT THE AUDIO BITE PANEL

(1) Do this test of the passenger entertainment system:

(a) Push the ENTERTAINMENT IFE button on the forward attendant's panel to the on position.

BOEING PROPRIETARY - Copyright © Unpublished Work - See title page for details

HAP ALL; AIRPLANES WITHOUT THE AUDIO BITE PANEL (Continued)

HAP ALL; AIRPLANES WITH CD PLAYERS

(b) Install compact discs (CDs) in the audio entertainment player (AEP). To install them, do this task: Compact Disc (CD) Installation, AMM TASK 23-34-01-400-801.

HAP ALL; AIRPLANES WITHOUT THE AUDIO BITE PANEL

(c) Connect headphones to the jack at an affected seat, another seat in the same seat group, another seat in the same column (left or right), and another seat in the opposite column.

(d) Put the channel selector switch on each passenger control unit (PCU) to 7.

1) Make sure you hear audio from the AEP on the headphones.

(e) If you do not hear audio on one seat, but you do hear audio on all others, then do the Fault Isolation Procedure - One Seat below.

(f) If you do not hear audio on the seats in the same seat group, but you do hear audio on the other seats, then do the Fault Isolation Procedure - Seat Group below.

(g) If you do not hear audio on the seats in the same column, but you do hear audio on the seat on the opposite column, then do the Fault Isolation Procedure - Column below.

(h) If you do not hear audio on any seat, then do the Fault Isolation Procedure - All Seats below.

(i) If you heard audio on all seats, then there was an intermittent fault.

HAP ALL

F. Fault Isolation Procedure - One Seat

HAP ALL; AIRPLANES WITHOUT THE AUDIO BITE PANEL

(1) Move the PCU to another location:

(a) Remove the PCU at the affected seat.

HAP ALL

1) To remove it, do this task: Passenger Control Unit Removal, AMM TASK 23-34-11-000-801.

HAP ALL; AIRPLANES WITHOUT THE AUDIO BITE PANEL

(b) Remove a PCU at an unaffected seat.

HAP ALL

1) To remove it, do this task: Passenger Control Unit Removal, AMM TASK 23-34-11-000-801.

HAP ALL; AIRPLANES WITHOUT THE AUDIO BITE PANEL

(c) Install the PCU from the affected seat at the unaffected seat location.

HAP ALL

1) To install it, do this task: Passenger Control Unit Installation, AMM TASK 23-34-11-400-801.

HAP ALL; AIRPLANES WITHOUT THE AUDIO BITE PANEL

(d) Connect headphones to the jack at the unaffected seat.

(e) Put the channel selector switch on the PCU to 7.

1) Make sure you hear audio from the AEP on the headphones.

(f) If you do not hear audio at the unaffected seat location, then do these steps:

BOEING PROPRIETARY - Copyright © Unpublished Work - See title page for details

1) Install a new PCU in the affected seat location.

HAP ALL

a) To install it, do this task: Passenger Control Unit Installation, AMM TASK 23-34-11-400-801.

HAP ALL; AIRPLANES WITHOUT THE AUDIO BITE PANEL

2) Re-install the PCU from the unaffected seat to its original location.

HAP ALL

a) To install it, do this task: Passenger Control Unit Installation, AMM TASK 23-34-11-400-801.

HAP ALL; AIRPLANES WITHOUT THE AUDIO BITE PANEL

3) Do the Repair Confirmation at the end of this task.

a) If the Repair Confirmation is not OK, then continue.

(g) If you do hear audio at the unaffected seat location, re-install the PCU to the affected seat and continue.

HAP ALL

1) To install it, do this task: Passenger Control Unit Installation, AMM TASK 23-34-11-400-801.

HAP ALL; AIRPLANES WITHOUT THE AUDIO BITE PANEL

(2) Replace the SEB for the affected seat.

HAP ALL

(a) These are the tasks:

1) Seat Electronics Box Removal, AMM TASK 23-34-04-000-801

2) Seat Electronics Box Installation, AMM TASK 23-34-04-400-801

HAP ALL; AIRPLANES WITHOUT THE AUDIO BITE PANEL

(b) Do the Repair Confirmation at the end of this task.

1) If the Repair Confirmation is not OK, then continue.

(3) Do this check of the wiring:

(a) Remove the passenger control unit (PCU) for the affected seat.

HAP ALL

1) To remove it, do this task: Passenger Control Unit Removal, AMM TASK 23-34-11-000-801.

HAP ALL; AIRPLANES WITHOUT THE AUDIO BITE PANEL

(b) Remove the seat electronic box (SEB) for the affected seat.

HAP ALL

1) To remove it, do this task: Seat Electronics Box Removal, AMM TASK 23-34-04-000-801.

HAP ALL; AIRPLANES WITHOUT THE AUDIO BITE PANEL

(c) Do a check of the wiring between the PCU and the SEB (WDM 23-34-02).

BOEING PROPRIETARY - Copyright © Unpublished Work - See title page for details

(d) If there is a problem with the wiring, do these steps:

1) Repair the wiring.

2) Re-install the SEB.

HAP ALL

a) To install it, do this task: Seat Electronics Box Installation, AMM TASK 23-34-04-400-801.

HAP ALL; AIRPLANES WITHOUT THE AUDIO BITE PANEL

3) Re-install the PCU.

HAP ALL

a) To install it, do this task: Passenger Control Unit Installation, AMM TASK 23-34-11-400-801.

4) Do the Repair Confirmation at the end of this task.

HAP ALL; AIRPLANES WITHOUT THE AUDIO BITE PANEL

G. Fault Isolation Procedure - Seat Group

(1) Replace the seat electronic box (SEB) for the affected seat group.

HAP ALL

(a) These are the tasks:

1) Seat Electronics Box Removal, AMM TASK 23-34-04-000-801

2) Seat Electronics Box Installation, AMM TASK 23-34-04-400-801

HAP ALL; AIRPLANES WITHOUT THE AUDIO BITE PANEL

(b) Do the Repair Confirmation at the end of this task.

1) If the Repair Confirmation is not ok, then continue.

(2) Do this check of the wiring:

(a) Remove the SEB for the affected row.

HAP ALL

1) To remove it, do this task: Seat Electronics Box Removal, AMM TASK 23-34-04-000-801.

HAP ALL; AIRPLANES WITHOUT THE AUDIO BITE PANEL

(b) Remove the SEB for the row in front of the affected row.

HAP ALL

1) To remove it, do this task: Seat Electronics Box Removal, AMM TASK 23-34-04-000-801.

HAP ALL; AIRPLANES WITHOUT THE AUDIO BITE PANEL

(c) Do a check of the wiring between the SEBs (WDM 23-34-02).

(d) If there is a problem with the wiring, do these steps:

1) Repair the wiring.

2) Re-install both SEBs.

BOEING PROPRIETARY - Copyright © Unpublished Work - See title page for details

HAP ALL; AIRPLANES WITHOUT THE AUDIO BITE PANEL (Continued)

HAP ALL

a) To install them, do this task: Seat Electronics Box Installation, AMM TASK 23-34-04-400-801.

3) Do the Repair Confirmation at the end of this task.

HAP ALL; AIRPLANES WITHOUT THE AUDIO BITE PANEL

H. Fault Isolation Procedure - Column

(1) Replace the audio multiplexer, M1956.

HAP ALL

(a) These are the tasks:

1) Audio Multiplexer Removal, AMM TASK 23-34-02-000-801

2) Audio Multiplexer Installation, AMM TASK 23-34-02-400-801

HAP ALL; AIRPLANES WITHOUT THE AUDIO BITE PANEL

(b) Do the Repair Confirmation at the end of this task.

1) If the Repair Confirmation is not ok, then continue.

(2) Do this check of the wiring:

(a) Remove the seat electronic box (SEB) in the first row of the affected column.

HAP ALL

1) To remove it, do this task: Seat Electronics Box Removal, AMM TASK 23-34-04-000-801.

HAP ALL; AIRPLANES WITHOUT THE AUDIO BITE PANEL

(b) Remove the audio multiplexer, M1956.

HAP ALL

1) To remove it, do this task: Audio Multiplexer Removal, AMM TASK 23-34-02-000-801.

HAP ALL; AIRPLANES WITHOUT THE AUDIO BITE PANEL

(c) Do a check of the wiring betwee the SEB and the audio multiplexer (WDM 23-34-02).

(d) If there is a problem with the wiring, then do these steps:

1) Repair the wiring.

2) Re-install the audio multiplexer.

HAP ALL

a) To install it, do this task: Audio Multiplexer Installation, AMM TASK 23-34-02-400-801.

HAP ALL; AIRPLANES WITHOUT THE AUDIO BITE PANEL

3) Re-install the SEB.

HAP ALL

a) To install it, do this task: Seat Electronics Box Installation, AMM TASK 23-34-04-400-801.

4) Do the Repair Confirmation at the end of this task.

I. Fault Isolation Procedure - All Seats

(1) Do this check of the audio entertainment system configuration:

BOEING PROPRIETARY - Copyright © Unpublished Work - See title page for details

(a) Make the selections on the VSCU to show the VSCU configuration.

1) Make sure the VSCU Configuration display shows YES next to AMUX.

(b) If the status of AMUX is NO, then do these steps:

1) Select AMUX and then push the SELECT button.

a) Make sure the status of AMUX changes to YES.

2) Do the Repair Confirmation at the end of this test.

a) If the Repair Confirmation is not OK, then continue.

(c) If the status of AMUX is YES, then continue.

(d) Make the selections on the VSCU to do the AMUX INITIALIZATION.

1) Make sure the VSCU shows the correct number of SEBs in each column.

(e) If the number of SEBs is correct, then do the Repair Confirmation at the end of this task.

1) If the Repair Confirmation is not OK, then continue.

(f) If the number of SEBs is not correct, then continue.

HAP ALL; AIRPLANES WITHOUT THE AUDIO BITE PANEL

(2) Do this check for power:

(a) Remove the audio multiplexer, M1956.

HAP ALL

1) To remove it, do this task: Audio Multiplexer Removal, AMM TASK 23-34-02-000-801.

(b) Remove the safety tags and close these circuit breakers:

F/O Electrical System Panel, P6-1

Row	Col	Number	Name
HAP 009, 015-026, 028-054, 101-999; HAP 001-008, 010-013 POST SB 737-23-1139			
B	10	C01584	ENTERTAINMENT AUDIO DC
HAP ALL			
C	8	C01456	ENTERTAINMENT AUDIO
HAP 001-013, 015-026, 028-030			
C	10	C01101	ENTERTAINMENT MUX

HAP ALL

(c) Do a check for 115V AC on pins 2 and 4 on connector D10527C of the audio multiplexer.

HAP ALL; AIRPLANES WITHOUT THE AUDIO BITE PANEL

(d) If there is 115V AC on the pins, then do these steps:

1) Install a new multiplexer.

HAP ALL

a) To install it, do this task: Audio Multiplexer Installation, AMM TASK 23-34-02-400-801.

HAP ALL; AIRPLANES WITHOUT THE AUDIO BITE PANEL

2) Do the Repair Confirmation at the end of this task.

a) If the Repair Confirmation is not ok, then continue.

(e) If there is not 115V AC on the pins, then re-install the audio multiplexer and continue.

HAP ALL

1) To install it, do this task: Audio Multiplexer Installation, AMM TASK 23-34-02-400-801.

BOEING PROPRIETARY - Copyright © Unpublished Work - See title page for details

HAP ALL; AIRPLANES WITHOUT THE AUDIO BITE PANEL

(3) Replace the audio entertainment module, M1891.

(a) Do the Repair Confirmation at the end of this task.

1) If the Repair Confirmation is not ok, then continue.

(4) Replace the power relay mux/AEP, R660.

(a) Do the Repair Confirmation at the end of this task.

HAP ALL

J. Repair Confirmation

HAP ALL; AIRPLANES WITHOUT THE AUDIO BITE PANEL

(1) Do this test of the passenger entertainment system:

(a) Push the ENTERTAINMENT IFE button on the forward attendant's panel to the on position.

HAP ALL; AIRPLANES WITH CD PLAYERS

(b) Install compact discs (CDs) in the audio entertainment player (AEP). To install them, do this task: Compact Disc (CD) Installation, AMM TASK 23-34-01-400-801.

HAP ALL; AIRPLANES WITHOUT THE AUDIO BITE PANEL

(c) Connect headphones to all affected areas.

(d) Put the channel selector switch on each passenger control unit (PCU) to 7.

1) Make sure you hear audio from the AEP on the headphones.

(e) If you heard audio on all seats, then you corrected the fault.

HAP ALL

END OF TASK

803. Seat Audio Does Not Turn Off - Fault Isolation

A. Description

(1) The ENTERTAINMENT IFE button on the forward attendant's panel does not turn off the passenger entertainment system.

B. Fault Isolation Procedure

(1) Replace the audio entertainment module on the forward attendant's panel, M1891.

END OF TASK

804. Damaged Audio Entertainment Player - Fault Isolation

A. Description

(1) The audio entertainment player (AEP) has been damaged.

B. Fault Isolation Procedure

(1) Replace the audio entertainment player (AEP).

These are the tasks:

Audio Entertainment Player Removal, AMM TASK 23-34-01-000-803,

Audio Entertainment Player Installation, AMM TASK 23-34-01-400-803.

END OF TASK

BOEING PROPRIETARY - Copyright © Unpublished Work - See title page for details

805. Audio Entertainment Player Does Not Operate - Fault Isolation

A. Description

(1) There is no audio from the AEP on any channel of all passenger control units.

B. Possible Causes

(1) Audio entertainment player (AEP), M01955

C. Circuit Breakers

(1) These are the primary circuit breakers related to the fault:

F/O Electrical System Panel, P6-1

Row	Col	Number	Name
HAP 009, 015-026, 028-054, 101-999; HAP 001-008, 010-013 POST SB 737-23-1139			
B	10	C01584	ENTERTAINMENT AUDIO DC
HAP ALL			
C	8	C01456	ENTERTAINMENT AUDIO
HAP 001-013, 015-026, 028-030			
C	10	C01101	ENTERTAINMENT MUX

HAP ALL

D. Initial Evaluation

(1) Do this test of the audio entertainment player (AEP):

(a) Push the ENTERTAINMENT IFE button on the forward attendant's panel to the on position.

HAP ALL; AIRPLANES WITH CD PLAYERS

(b) Install compact discs (CDs) in the AEP. To install them, do this task: Compact Disc (CD) Installation, AMM TASK 23-34-01-400-801.

HAP ALL

(c) Connect headphones to the headphone jack at a seat.

(d) Put the channel selector switch on the passenger control unit (PCU) to 7.

(e) Adjust the volume control to a comfortable level.

1) Make sure you hear audio from the AEP on the headphones.

(f) If you do not hear audio from the AEP, then do the Fault Isolation Procedure below.

(g) If you hear audio from the AEP then there was an intermittent fault.

E. Fault Isolation Procedure

(1) Replace the audio entertainment player, M01955.

These are the tasks:

Audio Entertainment Player Removal, AMM TASK 23-34-01-000-803,

Audio Entertainment Player Installation, AMM TASK 23-34-01-400-803.

(a) Push the ENTERTAINMENT IFE button on the forward attendant's panel to the on position.

HAP ALL; AIRPLANES WITH CD PLAYERS

(b) Install compact discs (CDs) in the AEP. To install them, do this task: Compact Disc (CD) Installation, AMM TASK 23-34-01-400-801.

HAP ALL

BOEING PROPRIETARY - Copyright © Unpublished Work - See title page for details

(c) Connect headphones to the headphone jack at a seat.

(d) Put the channel selector switch on the passenger control unit (PCU) to 7.

(e) Adjust the volume control to a comfortable level.

1) Make sure you hear audio from the AEP on the headphones.

(f) If you hear audio from the AEP then you corrected the fault.

END OF TASK

806. Seat Electronics Box/Seat to Seat Cable - Fault Isolation

A. Description

(1) If all the passenger control units (PCU) display 1-18 for channel selections there may be a problem with an Seat Electronics Box (SEB) or the Seat to Seat Cables.

(2) If there is a problem with the SEB or the seat to seat cables it can damage the communication circuitry in the Audio Multiplexer (MUX).

B. Possible causes

(1) Seat Electronics Box (SEB)

(2) Seat to Seat Cables

(3) Audio Multiplexer, M1956

C. Circuit Breakers

(1) These are the primary circuit breakers related to the fault:

F/O Electrical System Panel, P6-1

Row	Col	Number	Name
HAP 009, 015-026, 028-054, 101-999; HAP 001-008, 010-013 POST SB 737-23-1139			
B	10	C01584	ENTERTAINMENT AUDIO DC
HAP ALL			
C	8	C01456	ENTERTAINMENT AUDIO
HAP 001-013, 015-026, 028-030			
C	10	C01101	ENTERTAINMENT MUX

HAP ALL

D. Related Data

(1) (WDM 23-34-02)

E. Fault Isolation Procedure - Channels 1-18 displayed on PCU.

(1) If only one seat group displays channels 1-18, replace the SEB at that seat group or the SEB located under the seat group in front of the affected seats.

(2) Turn OFF the IFE power switch on the forward attendant's panel.

(3) Pull and collar all applicable IFE circuit breakers.

(4) Remove the sidewall disconnect for each column (WDM 23-34-02).

(5) Do the following steps to check the wiring:

(a) Check the resistance between pin 4 and pin 5 on the sidewall disconnect for each column

1) Resistance between these pins should be approximately 4.2 Kilo Ohms

BOEING PROPRIETARY - Copyright © Unpublished Work - See title page for details

(b) Measure the resistance in all 8 pins in each sidewall disconnect. Use the following table for approximate pin measurements.

PIN	PIN	Ohmmeter Reading
4	5	4.2 Kilo Ohms
14	15	4.5 Ohms
5	10	2.2 Kilo Ohms
4	10	2.2 Kilo Ohms
1	2	88 Ohms

(6) If the resistance between pin 4 and 5 is not 4.2 Kilo Ohms or there is a short between the other pins do the following:

(a) Move the terminating plug forward until the resistance reads 4.2 Kilo Ohm.

(b) The short between the pins disappears.

(7) You have now isolated the problem and need to replace the defective seat to seat cable (WDM 23-34-02)or the SEB (AMM PAGEBLOCK 23-34-04/401).

(8) If there are no defects you can replace the MUX (AMM PAGEBLOCK 23-34-02/401) and reattach all sidewall disconnects (WDM 23-34-02).

(9) Reset all applicable IFE circuit breakers.

(10) Turn ON the IFE power switch at the first attendant's front panel.

(11) If all PCU's display channel 1-12 you are finished.

(12) If after replacing the MUX the PCU's still display channels 1-18 check the following:

NOTE: If the problem was not fixed prior to installing the new MUX, it may become damaged and need replacement again.

(a) Bite Panel

1) Replace if necessary

(b) Check wiring between the MUX and side wall disconnect

(c) Check wiring between Bite Panel and MUX.

END OF TASK

BOEING PROPRIETARY - Copyright © Unpublished Work - See title page for details

801. Service Interphone Connection Problem - Fault Isolation

A. Description

(1) The service interphone does not connect to the flight interphone or other service interphone locations.

B. Possible Causes

(1) Remote Electronic Unit (REU), M1353

(2) SERVICE INTERPHONE switch, S50

(3) Wiring

C. Circuit Breakers

(1) These are the primary circuit breakers related to the fault:

F/O Electrical System Panel, P6-2

Row	Col	Number	Name
C	21	C00560	INTERPHONE POWER F/O DC 2
C	22	C00561	INTERPHONE POWER F/O BAT
C	23	C00239	INTERPHONE POWER CAPT DC 2
C	24	C00240	INTERPHONE POWER CAPT BAT
D	21	C00084	INTPH AND WARN
D	22	C00086	AUDIO F/O
D	23	C00083	AUDIO CAPT
D	24	C00085	AUDIO OBS

D. Related Data

(1) (SSM 23-41-11)

(2) (WDM 23-41-11)

E. Initial Evaluation

(1) Do these steps to prepare the service interphone system for initial evaluation and for fault isolation:

(a) Set the SERVICE INTERPHONE switch, S50, on the P5 Overhead Panel to the ON position.

(b) Connect a boom mic/headset to the pilot's station in the flight deck.

(c) Connect a boom mic/headset to the service interphone jack at the EE rack.

(d) Push the SERV INT microphone selector switch on the pilot's audio control panel (ACP).

(e) Push the volume control for the SVC microphone selector switch and turn to the middle position.

HAP 001-011

(2) Do this check of the service interphone system:

(a) Push and hold the PTT switch on the pilot's control wheel to the INT position.

(b) Speak into the pilot's boom microphone.

(c) Make sure the ground crew can hear the voice clearly from the headset.

(d) Release the PTT switch on the pilot's control wheel.

(e) Have the ground crew speak into the boom microphone.

(f) Make sure you can hear the voice clearly on the pilot's headset.

BOEING PROPRIETARY - Copyright © Unpublished Work - See title page for details

(g) If the voice is not heard on either headset, then do the Fault Isolation Procedure below.

(h) If the voice is heard on both headsets, then there was an intermittent fault.

HAP 012, 013, 015-026, 028-054, 101-999

(3) Do this check of the service interphone system:

(a) Push the PTT switch on the pilot's control wheel to the INT position.

(b) Speak into the pilot's boom microphone.

(c) Make sure the ground crew can hear the voice clearly from the headset.

(d) Push the switch to the center (OFF) position.

(e) Have the ground crew speak into the boom microphone.

(f) Make sure you can hear the voice clearly on the pilot's headset.

(g) If the voice is not heard on either headset, then do the Fault Isolation Procedure below.

(h) If the voice is heard on both headsets, then there was an intermittent fault.

HAP ALL

F. Fault Isolation Procedure

NOTE: You must do the steps to prepare for fault isolation that are in the Initial Evaluation before you can do these steps.

(1) Replace the Remote Electronic Unit (REU), M1353.

These are the tasks:

Remote Electronics Unit (REU) Removal, AMM TASK 23-51-01-000-801,

Remote Electronics Unit (REU) Installation, AMM TASK 23-51-01-000-802.

(a) Do the Repair Confirmation at the end of this task.

1) If the Repair Confirmation is not OK, then continue.

(2) Replace the SERVICE INTERPHONE switch, S50, on the P5 overhead panel.

(a) Do the Repair Confirmation at the end of this task.

1) If the Repair Confirmation is not OK, then continue.

(3) Do this check of the wiring:

(a) Remove the REU, M1353 from the E4-1 shelf. To remove it, do this task: Remote Electronics Unit (REU) Removal, AMM TASK 23-51-01-000-801.

(b) Remove the SERVICE INTERPHONE switch, S50, from the P5 overhead panel.

(c) Do a check for an open circuit between these pins of the SERVICE INTERPHONE switch, S50, and connector D2501B of the REU:

S50		**D2501B**
pin 2	- - - - - - - - - - - - - - - - - - - -	pin D6

(d) Remove the EE rack service interphone jack, D6025.

(e) Do a check for an open circuit between these pins of the SERVICE INTERPHONE switch, S50, and the EE rack service interphone jack, D6025:

S50		**D6025**
pin 1	- - - - - - - - - - - - - - - - - - - -	pin R

BOEING PROPRIETARY - Copyright © Unpublished Work - See title page for details

(f) Do a check for an open circuit between these pins of connector D2501B of the REU and the EE rack service interphone jack, D6025:

D2501B		D6025
pin D7	- - - - - - - - - - - - - - - - - -	pin S
pin E7	- - - - - - - - - - - - - - - - - -	pin T

(g) If you find a problem with the wiring, then do these steps:

1) Repair the wiring.
2) Re-install the REU. To install it, do this task: Remote Electronics Unit (REU) Installation, AMM TASK 23-51-01-000-802.
3) Re-install the SERVICE INTERPHONE switch.
4) Re-install the EE rack service interphone jack.
5) Do the Repair Confirmation at the end of this task:

G. Repair Confirmation

HAP 001-011

(1) Do this check of the service interphone system:

NOTE: You must do the steps to prepare for fault isolation that are in the Initial Evaluation before you can do this check.

(a) Push and hold the PTT switch on the pilot's control wheel to the INT position.
(b) Speak into the pilot's boom microphone.
(c) Make sure the ground crew can hear the voice clearly on the headset.
(d) Release the PTT switch on the pilot's control wheel.
(e) Have the ground crew speak into the boom microphone.
(f) Make sure you can hear the voice clearly on the pilot's headset.
(g) If the voice is heard on both headsets, then you corrected the fault.

HAP 012, 013, 015-026, 028-054, 101-999

(2) Do this check of the service interphone system:

NOTE: You must do the steps to prepare for fault isolation that are in the Initial Evaluation before you can do this check.

(a) Push the PTT switch on the pilot's control wheel to the INT position.
(b) Speak into the pilot's boom microphone.
(c) Make sure the ground crew can hear the voice clearly on the headset.
(d) Push the switch to the center (OFF) position.
(e) Have the ground crew speak into the boom microphone.
(f) Make sure you can hear the voice clearly on the pilot's headset.
(g) If the voice is heard on both headsets, then you corrected the fault.

HAP ALL

END OF TASK

802. Service Interphone Audio Problem at One Jack - Fault Isolation

A. Description

(1) The audio heard at one of the service interphone jacks is unsatisfactory.

BOEING PROPRIETARY - Copyright © Unpublished Work - See title page for details

B. Possible Causes

(1) Service Interphone Jack

(2) Wiring

C. Circuit Breakers

(1) These are the primary circuit breakers related to the fault:

F/O Electrical System Panel, P6-2

Row	Col	Number	Name
C	21	C00560	INTERPHONE POWER F/O DC 2
C	22	C00561	INTERPHONE POWER F/O BAT
C	23	C00239	INTERPHONE POWER CAPT DC 2
C	24	C00240	INTERPHONE POWER CAPT BAT
D	21	C00084	INTPH AND WARN
D	22	C00086	AUDIO F/O
D	23	C00083	AUDIO CAPT
D	24	C00085	AUDIO OBS

D. Related Data

(1) (SSM 23-41-11)

(2) (WDM 23-41-11)

E. Initial Evaluation

HAP 001-011

(1) Do this check of the service interphone jack:

(a) Push and hold the PTT switch on the pilot's control wheel to the INT position.

(b) Speak into the pilot's boom microphone.

(c) Make sure the ground crew can hear the voice clearly on the headset at the applicable service interphone jack.

(d) Release the PTT switch on the pilot's control wheel.

(e) Have the ground crew speak into the boom microphone.

(f) Make sure you can hear the voice clearly on the pilot's headset.

(g) If the voice is not heard on either headset, then do the Fault Isolation Procedure below.

(h) If the voice is heard on both headsets, then there was an intermittent fault.

HAP 012, 013, 015-026, 028-054, 101-999

(2) Do this check of the service interphone jack:

(a) Push the PTT switch on the pilot's control wheel to the INT position.

(b) Speak into the pilot's boom microphone.

(c) Make sure the ground crew can hear the voice clearly on the headset at the applicable service interphone jack.

(d) Push the switch to the center (OFF) position.

(e) Have the ground crew speak into the boom microphone.

(f) Make sure you can hear the voice clearly on the pilot's headset.

(g) If the voice is not heard on either headset, then do the Fault Isolation Procedure below.

(h) If the voice is heard on both headsets, then there was an intermittent fault.

BOEING PROPRIETARY - Copyright © Unpublished Work - See title page for details

HAP ALL

F. Fault Isolation Procedure

NOTE: You must do the steps to prepare for fault isolation that are in the Initial Evaluation before you can do these steps.

(1) Replace the applicable jack.

(a) Do the Repair Confirmation at the end of this task.

1) If the Repair Confirmation is not OK, then continue.

(2) Do this check of the wiring:

(a) Remove the REU from the E4-1 shelf. To remove it, do this task: Remote Electronics Unit (REU) Removal, AMM TASK 23-51-01-000-801.

(b) Do a check for an open circuit between these pins of connector D2501B of the REU and the applicable service interphone jack:

	JACK LOCATION		
	REU CONNECTOR		**JACK CONNECTOR**
EE RACK	**D2501B**		**D6025**
	pin D7	- - - - - - - - - - - - - - - - - -	pin S
	D2501B		**D6025**
	pin E7	- - - - - - - - - - - - - - - - - -	pin T
APU	**D2501B**		**D6017**
	pin D7	- - - - - - - - - - - - - - - - - -	pin S
	D2501B		**D6017**
	pin E7	- - - - - - - - - - - - - - - - - -	pin T
AFT ENTRY LIGHT PANEL	**D2501B**		**D6015**
	pin D7	- - - - - - - - - - - - - - - - - -	pin S
	D2501B		**D6015**
	pin E7	- - - - - - - - - - - - - - - - - -	pin T
LEFT WHEEL WELL	**D2501B**		**D6011**
	pin D7	- - - - - - - - - - - - - - - - - -	pin S
	D2501B		**D6011**
	pin E7	- - - - - - - - - - - - - - - - - -	pin T
RIGHT WHEEL WELL	**D2501B**		**D6057**
	pin D7	- - - - - - - - - - - - - - - - - -	pin S
	D2501B		**D6057**
	pin E7	- - - - - - - - - - - - - - - - - -	pin T

BOEING PROPRIETARY - Copyright © Unpublished Work - See title page for details

RIGHT WING REFUELING SLAT	**D2501B**	**D6013**
	pin D7 - - - - - - - - - - - - - - - - - -	pin S
	D2501B	**D6013**
	pin E7 - - - - - - - - - - - - - - - - - -	pin T

(c) If you find a problem with the wiring, then do these steps:

1) Repair the wiring.

2) Re-install the REU. To install it, do this task: Remote Electronics Unit (REU) Installation, AMM TASK 23-51-01-000-802.

3) Do the Repair Confirmation at the end of this task.

G. Repair Confirmation

HAP 001-011

(1) Do this check of the service interphone system:

NOTE: You must do the steps to prepare for fault isolation that are in the Initial Evaluation before you can do this check.

(a) Push and hold the PTT switch on the pilot's control wheel to the INT position.

(b) Speak into the pilot's boom microphone.

(c) Make sure the ground crew can hear the voice clearly on the headset at the applicable service interphone jack.

(d) Release the PTT switch on the pilot's control wheel.

(e) Have the ground crew speak into the boom microphone.

(f) Make you can hear the voice clearly on the pilot's headset.

(g) If the voice is heard on both headsets, then you corrected the fault.

HAP 012, 013, 015-026, 028-054, 101-999

(2) Do this check of the service interphone system:

NOTE: You must do the steps to prepare for fault isolation that are in the Initial Evaluation before you can do this check.

(a) Push the PTT switch on the pilot's control wheel to the INT position.

(b) Speak into the pilot's boom microphone.

(c) Make sure the ground crew can hear the voice clearly on the headset at the applicable service interphone jack.

(d) Push the switch to the center (OFF) position.

(e) Have the ground crew speak into the boom microphone.

(f) Make you can hear the voice clearly on the pilot's headset.

(g) If the voice is heard on both headsets, then you corrected the fault.

HAP ALL

END OF TASK

BOEING PROPRIETARY - Copyright © Unpublished Work - See title page for details

803. Service Interphone Audio Problem at All Jacks - Fault Isolation

A. Description

(1) The audio heard at all of the service interphone jacks is unsatisfactory.

B. Possible Causes

(1) Remote Electronic Unit (REU), M1353

(2) Wiring

C. Circuit Breakers

(1) These are the primary circuit breakers related to the fault:

F/O Electrical System Panel, P6-2

Row	Col	Number	Name
C	21	C00560	INTERPHONE POWER F/O DC 2
C	22	C00561	INTERPHONE POWER F/O BAT
C	23	C00239	INTERPHONE POWER CAPT DC 2
C	24	C00240	INTERPHONE POWER CAPT BAT
D	21	C00084	INTPH AND WARN
D	22	C00086	AUDIO F/O
D	23	C00083	AUDIO CAPT
D	24	C00085	AUDIO OBS

D. Related Data

(1) (SSM 23-41-11)

(2) (WDM 23-41-11)

E. Initial Evaluation

HAP 001-013, 015-026, 028-036

(1) Do these steps to prepare the service interphone system for initial evaluation and for fault isolation:

(a) Set the SERVICE INTERPHONE switch, S50, on the P5 Overhead Panel to the ON position.

(b) Connect a boom mic/headset to the pilot's station in the flight deck.

(c) Connect a boom mic/headset to the EE rack service interphone jack.

(d) Push the SERV INT microphone selector switch on the pilot's audio control panel (ACP).

(e) Push the volume control for the SERV INT microphone selector switch and turn to the middle position.

HAP 037-054, 101-999

(2) Do these steps to prepare the service interphone system for initial evaluation and for fault isolation:

(a) Set the SERVICE INTERPHONE switch, S50, on the P5 Overhead Panel to the ON position.

(b) Connect a boom mic/headset to the pilot's station in the flight deck.

(c) Connect a boom mic/headset to the EE rack service interphone jack.

(d) Push the CABIN microphone selector switch on the pilot's audio control panel (ACP).

(e) Push the volume control for the CABIN microphone selector switch and turn to the middle position.

BOEING PROPRIETARY - Copyright © Unpublished Work - See title page for details

HAP ALL

HAP 001-011

(3) Do this check of the service interphone system:

(a) Push and hold the PTT switch on the pilot's control wheel to the INT position.

(b) Speak into the pilot's boom microphone.

(c) Make sure the ground crew can hear the voice clearly on the headset at the EE rack service interphone jack.

NOTE: Repeat this step at several of the service interphone jack locations to make sure the problem occurs at all jacks.

(d) Release the PTT switch on the pilot's control wheel.

(e) Have the ground crew speak into the boom microphone.

(f) Make sure you can hear the voice clearly on the pilot's headset.

(g) If the voice is not heard on either headset, from each service interphone jack you tried, then do the Fault Isolation Procedure below.

(h) If the voice is heard on both headsets, then there was an intermittent fault.

HAP 012, 013, 015-026, 028-054, 101-999

(4) Do this check of the service interphone system:

(a) Push the PTT switch on the pilot's control wheel to the INT position.

(b) Speak into the pilot's boom microphone.

(c) Make sure the ground crew can hear the voice clearly on the headset at the EE rack service interphone jack.

NOTE: Repeat this step at several of the service interphone jack locations to make sure the problem occurs at all jacks.

(d) Push the switch to the center (OFF) position.

(e) Have the ground crew speak into the boom microphone.

(f) Make sure you can hear the voice clearly on the pilot's headset.

(g) If the voice is not heard on either headset, from each service interphone jack you tried, then do the Fault Isolation Procedure below.

(h) If the voice is heard on both headsets, then there was an intermittent fault.

HAP ALL

F. Fault Isolation Procedure

NOTE: You must do the steps to prepare for fault isolation that are in the Initial Evaluation before you can do these steps.

(1) Replace the Remote Electronic Unit (REU), M1353.

These are the tasks:

Remote Electronics Unit (REU) Removal, AMM TASK 23-51-01-000-801,

Remote Electronics Unit (REU) Installation, AMM TASK 23-51-01-000-802.

(a) Do the Repair Confirmation at the end of this task.

1) If the Repair Confirmation is not OK, then continue.

BOEING PROPRIETARY - Copyright © Unpublished Work - See title page for details

(2) Do this check of the wiring:

(a) Remove the REU from the E4-1 shelf. To remove it, do this task: Remote Electronics Unit (REU) Removal, AMM TASK 23-51-01-000-801.

(b) Remove the EE rack service interphone jack, D6025.

(c) Do a check for an open circuit between these pins of connector D2501B of the REU and the EE rack service interphone jack, D6025:

D2501B		D6025
pin D7	- - - - - - - - - - - - - - - - - -	pin S
pin E7	- - - - - - - - - - - - - - - - - -	pin T

(d) If you find a problem with the wiring, then do these steps:

1) Repair the wiring.

2) Re-install the REU. To install it, do this task: Remote Electronics Unit (REU) Installation, AMM TASK 23-51-01-000-802.

3) Re-install the EE rack service interphone jack, D6025.

4) Do the Repair Confirmation at the end of this task.

G. Repair Confirmation

HAP 001-011

(1) Do this check of the service interphone system:

NOTE: You must do the steps to prepare for fault isolation that are in the Initial Evaluation before you can do these steps.

(a) Push and hold the PTT switch on the pilot's control wheel to the INT position.

(b) Speak into the pilot's boom microphone.

(c) Make sure the ground crew can hear the voice clearly on the headset at the EE rack service interphone jack.

(d) Release the PTT switch on the pilot's control wheel.

(e) Have the ground crew speak into the boom microphone.

(f) Make sure you can hear the voice clearly on the pilot's headset.

(g) If the voice is heard on both headsets, then you corrected the fault.

HAP 012, 013, 015-026, 028-054, 101-999

(2) Do this check of the service interphone system:

NOTE: You must do the steps to prepare for fault isolation that are in the Initial Evaluation before you can do these steps.

(a) Push the PTT switch on the pilot's control wheel to the INT position.

(b) Speak into the pilot's boom microphone.

(c) Make sure the ground crew can hear the voice clearly on the headset at the EE rack service interphone jack.

(d) Push the switch to the center (OFF) position.

(e) Have the ground crew speak into the boom microphone.

(f) Make sure you can hear the voice clearly on the pilot's headset.

(g) If the voice is heard on both headsets, then you corrected the fault.

BOEING PROPRIETARY - Copyright © Unpublished Work - See title page for details

HAP ALL

END OF TASK

804. Attendant Handset Problem - Fault Isolation

A. Description

(1) The audio heard at an attendant handset is unsatisfactory.

B. Possible Causes

(1) Handset, M74 or M75

(2) Cabin attendant's control panel, P13 (forward) or P14 (aft)

(3) Remote Electronic Unit (REU), M1353

(4) Wiring

C. Circuit Breakers

(1) These are the primary circuit breakers related to the fault:

F/O Electrical System Panel, P6-2

Row	Col	Number	Name
C	21	C00560	INTERPHONE POWER F/O DC 2
C	22	C00561	INTERPHONE POWER F/O BAT
C	23	C00239	INTERPHONE POWER CAPT DC 2
C	24	C00240	INTERPHONE POWER CAPT BAT
D	21	C00084	INTPH AND WARN
D	22	C00086	AUDIO F/O
D	23	C00083	AUDIO CAPT
D	24	C00085	AUDIO OBS

D. Related Data

(1) (SSM 23-41-11)

(2) (SSM 23-42-11)

(3) (WDM 23-41-11)

(4) (WDM 23-42-11)

E. Initial Evaluation

(1) Do this check of the attendant handset:

(a) Lift the handset from the cradle.

(b) Push the button for the attendant on the handset keypad.

(c) Make sure a chime is heard from the PA speakers and a master call light at the attendant's station comes on.

(d) Make voice communication to the other attendant's station.

(e) If the sound heard on the attendant's handset is not satisfactory, do the Fault Isolation Procedure below.

(f) If the sound heard on the attendant's handset is satisfactory, then there was an intermittent fault.

BOEING PROPRIETARY - Copyright © Unpublished Work - See title page for details

F. Fault Isolation Procedure

(1) Make sure the connection between the handset and cord is correct.

NOTE: To connect a cord to the handset, push the cord connector into the handset connector until an audible click is heard.

(2) Replace the attendant's handset/cord assembly, M74 or M75. These are the task:

Attendant Handset Removal, AMM TASK 23-42-01-000-801,

Attendant Handset Cord Removal, AMM TASK 23-42-01-000-802,

Attendant Handset Installation, AMM TASK 23-42-01-400-803,

Attendant Handset Cord Installation, AMM TASK 23-42-01-400-802.

(a) Push the button for the attendant on the handset keypad.

(b) Make sure a chime is heard from the PA speakers and a master call light at the attendant's station comes on.

(c) Make voice communication to the other attendant's station.

1) If the sound heard on the attendant's handset is satisfactory, you corrected the fault.

2) If the sound heard at the attendant's handset is not satisfactory, then continue.

(3) Replace the applicable cabin attendant's control panel.

These are the tasks:

Attendant's Panel and Components Removal, AMM TASK 25-25-11-000-801,

Attendant's Panel and Components Installation, AMM TASK 25-25-11-400-801.

(a) Push the button for the attendant on the handset keypad.

(b) Make sure a chime is heard from the PA speakers and a master call light at the attendant's station comes on.

(c) Make voice communication to the other attendant's station.

1) If the sound heard on the attendant's handset is satisfactory, you corrected the fault.

2) If the sound heard at the attendant's handset is not satisfactory, then continue.

(4) Replace the Remote Electronic Unit (REU), M1353.

These are the tasks:

Remote Electronics Unit (REU) Removal, AMM TASK 23-51-01-000-801,

Remote Electronics Unit (REU) Installation, AMM TASK 23-51-01-000-802.

(a) Push the button for the attendant on the handset keypad.

(b) Make sure a chime is heard from the PA speakers and a master call light at the attendant's station comes on.

(c) Make voice communication to the other attendant's station.

1) If the sound heard on the attendant's handset is satisfactory, you corrected the fault.

2) If the sound heard at the attendant's handset is not satisfactory, then continue.

(5) Do this check of the wiring:

(a) Remove the attendant's handset.

(b) Remove the REU, M1353. To remove it, do this task: Remote Electronics Unit (REU) Removal, AMM TASK 23-51-01-000-801.

BOEING PROPRIETARY - Copyright © Unpublished Work - See title page for details

(c) Do a check for an open circuit between these pins of connector P-A on the attendant's handset, M74 or M75, and connector D2501B of the REU, M1353:

P-A		D2501B
pin C5	- - - - - - - - - - - - - - - - - -	pin G8
pin C6	- - - - - - - - - - - - - - - - - -	pin F7
pin D5	- - - - - - - - - - - - - - - - - -	pin G9

(d) If you find a problem with the wiring, then do these steps:

1) Repair the wiring.

2) Re-install the attendant's handset.

3) Re-install the REU, M1353. To install it, do this task: Remote Electronics Unit (REU) Installation, AMM TASK 23-51-01-000-802.

(e) Push the button for the attendant on the handset keypad.

(f) Make sure a chime is heard from the PA speakers and a master call light at the attendant's station comes on.

(g) Make voice communication to the other attendant's station.

1) If the sound heard at the attendant's handset is satisfactory, you corrected the fault.

END OF TASK

BOEING PROPRIETARY - Copyright © Unpublished Work - See title page for details

801. Attendant To Flight Deck, Captain's Call Light Does Not Operate - Fault Isolation

A. Description

(1) The CALL light on the forward overhead panel does not come on, but the call chime sounds when the PILOT button is pushed on an attendant's handset.

B. Possible Causes

(1) Master Dim and Test switch, S3

(2) Captain's Call Light, L19

(3) Wiring

C. Circuit Breakers

(1) This is the primary circuit breaker related to the fault:

CAPT Electrical System Panel, P18-3

Row	Col	Number	Name
A	9	C00073	PASSENGER CABIN CREW CALL

D. Related Data

(1) (SSM 23-42-11)

(2) (SSM 23-43-11)

(3) (WDM 23-42-11)

(4) (WDM 23-43-11)

E. Initial Evaluation

(1) Do this check of the captain's CALL light:

(a) Set the Master Dim and Test switch, S3, on the P1 main instrument panel, to BRT.

(b) Press and hold the button for the pilot on the attendant's handset.

1) Make sure the CALL light on the P5 forward overhead panel goes on.

(c) Release the button on the attendant's handset.

(d) If the CALL light does not go on, then do the Fault Isolation Procedure below.

(e) If the CALL light goes on, then there was an intermittent fault.

F. Fault Isolation Procedure

(1) Do this test of the Captain's CALL light, L19:

(a) Set the Master Dim and Test switch, S3, on the P1 main instrument panel, to TEST.

(b) If the CALL light does not go on, then replace the Captain's CALL light.

1) Do the Repair Confirmation at the end of this task.

a) If the Repair Confirmation is not OK, then continue.

(c) If the CALL light goes on, then continue.

(2) Do this check of the wiring:

(a) Remove the Captain's CALL light, L19, from the P5 forward overhead panel.

(b) Remove the handset logic control card from the attendant's panel.

BOEING PROPRIETARY - Copyright © Unpublished Work - See title page for details

(c) Do a check for an open circuit between these pins of the Captain's CALL light, L19, and connector D11068 (forward) or D11466 (aft) of the lavatory module:

1) Forward

L19		**D11068**
pin E5	- - - - - - - - - - - - - - - - -	pin 41

2) Aft

L19		**D11466**
pin E5	- - - - - - - - - - - - - - - - -	pin 41

(d) If you find a problem with the wiring, then do these steps:

1) Repair the wiring.
2) Re-install the handset logic control card.
3) Re-install the Captain's CALL light.
4) Do the Repair Confirmation at the end of this task.

G. Repair Confirmation

(1) Do this check of the Captain's CALL light:

(a) Press and hold the button for the pilot on the attendant's handset.

1) Make sure the CALL light on the P5 forward overhead panel goes on.

(b) Release the button on the attendant's handset.

(c) If the CALL light goes on, then you corrected the fault.

——————— END OF TASK ———————

802. Flight Deck to Attendant, Call System Does Not Operate - Fault Isolation

A. Description

(1) The pink attendant call light on the Exit Locator Signs does not come on and the call chime does not sound when the flight crew presses the ATTEND button on the P5 forward overhead panel.

B. Possible Causes

(1) Attendant Call Switch, S36

(2) Wiring

C. Circuit Breakers

(1) This is the primary circuit breaker related to the fault:

CAPT Electrical System Panel, P18-3

Row	Col	Number	Name
A	9	C00073	PASSENGER CABIN CREW CALL

D. Related Data

(1) (SSM 23-42-11)

(2) (SSM 23-43-11)

(3) (WDM 23-42-11)

(4) (WDM 23-43-11)

BOEING PROPRIETARY - Copyright © Unpublished Work - See title page for details

E. Initial Evaluation

(1) Do this check of the attendant's CALL light:

(a) Press the ATTEND button on the P5 forward overhead panel.

1) Make sure the pink call light on the forward and aft Exit Locator Signs comes on.

2) Make sure you hear a chime in the passenger cabin.

(b) Press the button for reset on the attendant's handset.

(c) If the pink call lights do not come on and the chime does not sound, then do the Fault Isolation Procedure below.

(d) If the pink call lights go on and the chime sounds, then there was an intermittent fault.

F. Fault Isolation Procedure

(1) Replace the Attendant's Call switch, S36, on the P5 forward overhead panel.

(a) Do the Repair Confirmation at the end of this task.

1) If the Repair Confirmation is not OK, then continue.

(2) Do these checks of the wiring:

(a) Remove the Exit Locator Sign, L1086 (forward) or L1223 (aft).

(b) Remove the handset logic control card from the attendant's panel.

(c) Do a check for an open circuit between these pins of connector D3160 (forward) or D10180 (aft), of the Exit Locator Sign, and connector D11068 (forward) or D11466 (aft) of the lavatory module:

1) Forward

D3160		**D11068/D11466**
pin 4	- - - - - - - - - - - - - - - - - -	pin 48

2) Aft

D10180		**D11068**
pin 4	- - - - - - - - - - - - - - - - - -	pin 47

(d) Remove the Attendant's Call switch, S36, from the P5 forward overhead panel.

(e) Do a check for an open circuit between these pins of the attendant's call switch, S36, and connector D11068 of the forward lavatory module:

S36		**D11068**
pin 1	- - - - - - - - - - - - - - - - - -	pin 46

(f) If there is an open circuit, then do these steps:

1) Repair the wiring.

2) Re-install the Attendant's Call switch.

3) Re-install the handset logic control card.

4) Re-install the Exit Locator Sign.

5) Do the Repair Confirmation at the end of this task.

G. Repair Confirmation

(1) Do this check of the attendant's CALL light:

(a) Press the ATTEND button on the P5 forward overhead panel.

1) Make sure the pink call light on the forward and aft Exit Locator Signs comes on.

BOEING PROPRIETARY - Copyright © Unpublished Work - See title page for details

2) Make sure you hear a chime in the passenger cabin.

(b) Press the button for reset on the attendant's handset.

(c) If the pink call lights go on and the chime sounds, then you corrected the fault.

—————— END OF TASK ——————

803. Attendant Call Chime Does Not Operate - Fault Isolation

A. Description

(1) The chime from the Passenger Address system does not come on, but the call lights come on when the flight crew presses the ATTENDANT button on the P5 forward overhead panel.

B. Possible Causes

(1) Passenger Address Amplifier, M63

(2) Wiring

C. Circuit Breakers

(1) These are the primary circuit breakers related to the fault:

CAPT Electrical System Panel, P18-3

Row	Col	Number	Name
A	9	C00073	PASSENGER CABIN CREW CALL

F/O Electrical System Panel, P6-1

Row	Col	Number	Name
D	4	C00082	COMMUNICATIONS PA AMPL BAT

D. Related Data

(1) (SSM 23-42-11)

(2) (SSM 23-43-11)

(3) (WDM 23-42-11)

(4) (WDM 23-43-11)

E. Initial Evaluation

(1) Do this check of the call chime:

(a) Press either the ATTEND button on the P5 forward overhead panel, or the button for the attendant on the attendant handset.

1) Make sure you hear a chime in the passenger cabin.

(b) Press the button for reset on the attendant's handset.

(c) If the chime does not sound, then do the Fault Isolation Procedure below.

(d) If the chime sounds, then there was an intermittent fault.

F. Fault Isolation Procedure

(1) Replace the Passenger Address Amplifier, M63.

These are the tasks:

Passenger Address (PA) Amplifier Removal, AMM TASK 23-31-01-000-801,

Passenger Address (PA) Amplifier Installation, AMM TASK 23-31-01-400-801.

BOEING PROPRIETARY - Copyright © Unpublished Work - See title page for details

(a) Do the Repair Confirmation at the end of this task.

1) If the Repair Confirmation is not OK, then continue.

(2) Do this check of the wiring:

(a) Remove the Passenger Address Amplifier, M63. To remove it, do this task: Passenger Address (PA) Amplifier Removal, AMM TASK 23-31-01-000-801.

(b) Remove the handset logic control card from the attendant's panel.

(c) Do a check for an open circuit between these pins of connector D2639B of the Passenger Address Amplifier, and connector D11068 (forward) or D11466 (aft) of the lavatory module:

1) Forward

D2639B		**D11068**
pin B11	- - - - - - - - - - - - - - - -	pin 44/45

2) Aft

D2639B		**D11466**
pin B11	- - - - - - - - - - - - - - - -	pin 44

(d) If there is an open circuit, then do these steps:

1) Repair the wiring.

2) Re-install the Passenger Address Amplifier. To install it, do this task: Passenger Address (PA) Amplifier Installation, AMM TASK 23-31-01-400-801.

3) Re-install the handset logic control card.

4) Do the Repair Confirmation at the end of this task.

G. Repair Confirmation

(1) Do this check of the attendant's CALL light:

(a) Press either the ATTEND button on the P5 forward overhead panel, or the button for the attendant on the attendant handset.

1) Make sure you hear a chime in the passenger cabin.

(b) Press the button for reset on the attendant's handset.

(c) If you heard a chime, then you corrected the fault.

——————— END OF TASK ———————

804. Flight Compartment Call Chime Does Not Operate - Fault Isolation

A. Description

(1) The chime from the Aural Warning Module does not come on, but the CALL light on the P5 forward overhead panel comes on when the ground crew presses the PILOT CALL button on the P19 external power panel or an attendant presses the button for the pilot on the attendant handset.

B. Possible Causes

(1) Aural Warning Module, M315

(2) Handset, M74 or M75

(3) PILOT CALL switch, S33

(4) Wiring

BOEING PROPRIETARY - Copyright © Unpublished Work - See title page for details

C. Circuit Breakers

(1) These are the primary circuit breakers related to the fault:

CAPT Electrical System Panel, P18-3

Row	Col	Number	Name
A	9	C00073	PASSENGER CABIN CREW CALL

F/O Electrical System Panel, P6-3

Row	Col	Number	Name
D	18	C00451	LANDING GEAR AURAL WARN

D. Related Data

(1) (SSM 23-42-11)

(2) (SSM 23-43-11)

(3) (WDM 23-42-11)

(4) (WDM 23-43-11)

E. Initial Evaluation

(1) Do this check of the call chime:

(a) Press the PILOT CALL button on the P19 External Power panel and the button for the pilot on the forward and aft handsets.

(b) Make sure you hear a chime in the flight deck.

(c) If you do not hear a chime when you push the button for the pilot on one handset but you hear the chime for the other handset, then do the Fault Isolation Procedure - Handset.

(d) If you do not hear a chime when you push the button for the pilot on the two handsets but you hear a chime when you push the PILOT CALL button on the P19 External Power panel, then do the Fault Isolation Procedure - Handset Wiring.

(e) If you hear a chime when you push the button for the pilot on one of the handsets but you do not hear a chime when you push the PILOT CALL button on P19 panel, then do the Fault Isolation Procedure - Switch.

(f) If you do not hear a chime when you push the button for the pilot on the two handsets and the PILOT CALL button on P19 panel, then do the Fault Isolation Procedure - Aural Warning Module.

F. Fault Isolation Procedure - Handset

(1) Replace the defective handset, M74 or M75.

These are the tasks:

Attendant Handset Removal, AMM TASK 23-42-01-000-801,

Attendant Handset Installation, AMM TASK 23-42-01-400-803.

(a) Do the Repair Confirmation at the end of this task.

(b) If the Repair Confirmation is not OK, then continue.

(2) Do this check of the wiring (WDM 23-42-11).

(a) Remove the defective handset. To remove it, do this task:

Attendant Handset Removal, AMM TASK 23-42-01-000-801.

(b) Do a check between pin E13 on the handset and the terminator box SM9.

BOEING PROPRIETARY - Copyright © Unpublished Work - See title page for details

(c) If you find problems with the wiring, do these steps:

1) Repair the wiring.

2) Re-install the handset. To install it, do this task:
Attendant Handset Installation, AMM TASK 23-42-01-400-803.

3) Do the Repair Confirmation at the end of this task.

G. Fault Isolation Procedure - Handset Wiring

(1) Do a check of the wiring from the handsets to the Aural Warning Module.

(a) Remove the defective handset. To remove it, do this task:
Attendant Handset Removal, AMM TASK 23-42-01-000-801.

(b) Remove the Aural Warning Module. To remove it, do this task:
Aural Warning Module Removal, AMM TASK 31-51-04-000-801.

(c) Do a check of the wiring beween pin E13 on the handset and pin 7 on the Aural Warning Module connector D940.

(d) If you find problems with the wiring, do these steps:

1) Repair the wiring.

2) Re-install the handset. To install it, do this task:
Attendant Handset Installation, AMM TASK 23-42-01-400-803.

3) Re-install the Aural Warning Module. To install it, do this task:
Aural Warning Module Installation, AMM TASK 31-51-04-400-801.

4) Do the Repair Confirmation at the end of this task.

H. Fault Isolation Procedure - Switch

(1) Replace the PILOT CALL switch, S33 on the P19 External Power panel.

(a) Do the Repair Confirmation at the end of this task.

I. Fault Isolation Procedure - Aural Warning Module

(1) Replace the Aural Warning Module, M315.
These are the tasks:
Aural Warning Module Removal, AMM TASK 31-51-04-000-801,
Aural Warning Module Installation, AMM TASK 31-51-04-400-801.

(a) Do the Repair Confirmation at the end of this task.

1) If the Repair Confirmation is not OK, then continue.

(2) Do this check of the wiring:

(a) Remove the Aural Warning Module. To remove it, do this task: Aural Warning Module Removal, AMM TASK 31-51-04-000-801.

(b) Press and hold the PILOT CALL switch, S33, on the P19 External Power panel or the button for the pilot on the attendant's handset.

(c) Do a check for 28 VDC at the Aural Warning Module connector D940, pin 7 (pin 6 ground).

(d) Release the PILOT CALL switch or button for the pilot on the attendant handset.

(e) If there is not 28 VDC, then do these steps:

1) Repair the wiring.

BOEING PROPRIETARY - Copyright © Unpublished Work - See title page for details

2) Re-install the Aural Warning Module. To install it, do this task: Aural Warning Module Installation, AMM TASK 31-51-04-400-801.

3) Do the Repair Confirmation at the end of this task.

J. Repair Confirmation

(1) Do this check of the call chime:

(a) Press either the PILOT CALL button on the P19 External Power panel, or the button for the pilot on the attendant handset.

(b) Make sure you hear a chime in the flight deck.

(c) If the chime sounds, then you corrected the fault.

END OF TASK

805. Attendant to Flight Deck, Call System Does Not Operate - Fault Isolation

A. Description

(1) The cabin crew cannot communicate with the flight deck or between the crew stations using the crew call and interphone system.

B. Possible Causes

(1) Cabin attendant's control panel, P13 (forward) or P14 (aft)

(2) Magnetic actuated reset switch

C. Circuit Breakers

(1) These are the primary circuit breakers related to the fault:

CAPT Electrical System Panel, P18-3

Row	Col	Number	Name
A	9	C00073	PASSENGER CABIN CREW CALL

F/O Electrical System Panel, P6-3

Row	Col	Number	Name
D	18	C00451	LANDING GEAR AURAL WARN

D. Related Data

(1) (SSM 23-42-11)

(2) (SSM 23-43-11)

(3) (WDM 23-42-11)

(4) (WDM 23-43-11)

E. Initial Evaluation

(1) Do this check of the attendant handset:

(a) Lift the handset from the handle cradle.

(b) Push the button for the attendant on the handset keypad.

1) Make sure you hear a chime on the PA speakers.

2) Make sure the pink attendant call light at the other attendant's station comes on.

(c) Make voice communication to the calling attendant's station.

BOEING PROPRIETARY - Copyright © Unpublished Work - See title page for details

1) Make sure communication can be made.

(d) If the voice is not heard in the attendant' station, then do the Fault Isolation Procedure below:

F. Fault Isolation Procedure

(1) Replace the applicable cabin attendant's control panel.

These are the tasks:

Attendant's Panel and Components Removal, AMM TASK 25-25-11-000-801,

Attendant's Panel and Components Installation, AMM TASK 25-25-11-400-801.

(a) Do the Repair Confirmation at the end of this task.

1) If the Repair Confirmation is not satisfactory, then continue.

(2) Do this check of the cradle reset magnet:

(a) Remove the handset handle cradle, do this task: Attendant Handset Cradle Removal, AMM TASK 23-42-01-000-803

(b) Remove the retainer.

(c) Repair the cradle reset magnet, do this task: Attendant Handset Cradle Installation, AMM TASK 23-42-01-400-801

(d) Re-install the retainer.

(e) Re-install the handset cradle.

(f) Set the handset in the cradle.

G. Repair Confirmation

(1) Do this check of the handset:

(a) Lift the handset from the handle cradle.

(b) Push the button for the attendant on the handset keypad.

1) Make sure you hear a chime on the PA speakers.

2) Make sure the pink attendant call light at the other attendant's station comes on.

(c) Make voice communication to the calling attendant's station.

1) Make sure communication can be made.

(d) If the voice is heard, then you corrected the fault.

END OF TASK

BOEING PROPRIETARY - Copyright © Unpublished Work - See title page for details

801. Ground Crew Call Horn Does Not Operate - Fault Isolation

A. Description

(1) The ground crew call horn does not sound in the nose wheel well area.

B. Possible Causes

(1) Ground Crew Call Horn, M53

(2) Ground Crew Call Switch, S32

(3) Wiring

(4) No power to the Ground Crew Call Horn

C. Circuit Breakers

(1) This is the primary circuit breaker related to the fault:

CAPT Electrical System Panel, P18-3

Row	Col	Number	Name
A	9	C00073	PASSENGER CABIN CREW CALL

D. Related Data

(1) (SSM 23-43-11)

(2) (WDM 23-43-11)

E. Initial Evaluation

(1) Do this check of the ground crew call horn:

(a) Push and hold the GND CALL switch on the P5 forward overhead panel.

1) Make sure that you hear the ground crew call horn in the nose wheel well area.

(b) Release the GND CALL switch.

(c) If the ground crew call horn does not sound, then do the Fault Isolation Procedure below.

(d) If the ground crew call horn sounds, then there was an intermittent fault.

F. Fault Isolation Procedure

(1) Do this check for electrical power to the ground crew call horn:

(a) Open this circuit breaker and install safety tag:

CAPT Electrical System Panel, P18-3

Row	Col	Number	Name
A	9	C00073	PASSENGER CABIN CREW CALL

(b) Remove the Ground Crew Call Horn, M53, from the nose wheel well area. To remove it, do this task: Ground Crew Call Horn Removal, AMM TASK 23-43-02-000-801.

(c) Remove the safety tag and close this circuit breaker:

CAPT Electrical System Panel, P18-3

Row	Col	Number	Name
A	9	C00073	PASSENGER CABIN CREW CALL

(d) Push and hold the GND CALL switch on the P5 forward overhead panel.

BOEING PROPRIETARY - Copyright © Unpublished Work - See title page for details

(e) Do a check for 28 VDC across the Ground Crew Call Horn wires (one 28 VDC, the other ground).

(f) Release the GND CALL switch.

(g) If there is 28 VDC, then do these steps:

1) Install a new Ground Crew Call Horn. To install it, do this task: Ground Crew Call Horn Installation, AMM TASK 23-43-02-420-801.

2) Do the Repair Confirmation at the end of this task.

(h) If there is not 28 VDC, then continue.

(2) Replace the Ground Crew Call Switch, S32, on the P5 forward overhead panel.

(a) Do the Repair Confirmation at the end of this task.

(b) If the Repair Confirmation is not OK, then continue.

(3) Repair the wiring between the ground crew call horn, M53, and the circuit breaker, C73, on the P18-3 circuit breaker panel.

(a) Do the Repair Confirmation at the end of this task.

G. Repair Confirmation

(1) Do this check of the ground crew call horn:

(a) Push and hold the GND CALL switch on the P5 forward overhead panel.

1) Make sure that you hear the ground crew call horn in the nose wheel well area.

(b) Release the GND CALL switch.

(c) If the ground crew call horn sounds, then you corrected the fault.

——————— END OF TASK ———————

802. Ground Crew Call Horn Operates Continuously - Fault Isolation

A. Description

(1) The ground crew call horn does not go off.

B. Possible Causes

(1) Air Data Inertial Reference Unit (ADIRU), M1749 (left) or M1752 (right)

(2) Ground crew call switch, S32

C. Circuit Breakers

(1) These are the primary circuit breakers related to the fault:

CAPT Electrical System Panel, P18-1

Row	Col	Number	Name
E	7	C01007	ADIRU LEFT AC

CAPT Electrical System Panel, P18-3

Row	Col	Number	Name
A	9	C00073	PASSENGER CABIN CREW CALL
A	17	C01433	EQUIPMENT COOLING LOW FLOW DETECT SUPPLY
A	18	C01434	EQUIPMENT COOLING LOW FLOW DETECT EXHAUST

BOEING PROPRIETARY - Copyright © Unpublished Work - See title page for details

F/O Electrical System Panel, P6-1

Row	Col	Number	Name
C	14	C01008	ADIRU RIGHT AC

F/O Electrical System Panel, P6-4

Row	Col	Number	Name
C	12	C01116	EQUIPMENT COOLING SUPPLY FAN CONTROL NORMAL
C	13	C01117	EQUIPMENT COOLING SUPPLY FAN CONTROL ALTN
C	14	C01435	EQUIPMENT COOLING EXHAUST FAN CONTROL NORMAL
C	15	C01436	EQUIPMENT COOLING EXHAUST FAN CONTROL ALTN

Power Distribution Panel Number 1, P91

Row	Col	Number	Name
A	8	C00935	EQPT CLG SPLY FAN PWR-ALTN
E	1	C00836	EQPT CLG EXH FAN PWR-NORM

Power Distribution Panel Number 2, P92

Row	Col	Number	Name
HAP 001-013, 015-026, 028-036			
A	8	C00934	EQPT CLG SPLY FAN PWR-NORM
A	10	C00837	EQPT CLG EXH FAN PWR-ALTN
HAP 037-054, 101-999			
D	10	C00934	EQPT CLG SPLY FAN PWR-NORM
D	12	C00837	EQPT CLG EXH FAN PWR-ALTN
HAP ALL			

D. Related Data

(1) (SSM 23-43-11)

(2) (WDM 23-43-11)

E. Fault Isolation Procedure

(1) Do this task: Ground Crew Call Horn Sounds - Fault Isolation, 34-21 TASK 829.

(a) If the ground crew call horn goes off, then you corrected the fault.

(b) If you still hear the ground crew call horn, then continue.

(2) Replace the Ground Crew Call Switch, S32, on the P5 forward overhead panel.

(a) Do this check of the ground crew call horn:

1) Push and hold the GND CALL switch on the P5 forward overhead panel.

a) Make sure you hear the ground crew call horn in the nose wheel well area.

2) Release the GND CALL switch.

a) Make sure that the ground crew call horn goes off.

3) If the ground crew call horn sounds and goes off, then you corrected the fault.

END OF TASK

BOEING PROPRIETARY - Copyright © Unpublished Work - See title page for details

803. Ground Crew to Flight Deck, Call System Does Not Operate - Fault Isolation

A. Description

(1) The CALL light on the forward overhead panel does not come on and the Aural Warning Unit does not chime when the ground crew pushes the PILOT CALL button on the External Power Panel.

B. Possible Causes

(1) PILOT CALL Switch, S33

C. Circuit Breakers

(1) This is the primary circuit breaker related to the fault:

CAPT Electrical System Panel, P18-3

Row	Col	Number	Name
A	9	C00073	PASSENGER CABIN CREW CALL

D. Related Data

(1) (SSM 23-43-11)

(2) (WDM 23-43-11)

E. Initial Evaluation

(1) Do this check of the captain's CALL light:

(a) Press and hold the PILOT CALL button on the P19 External Power panel.

1) Make sure the CALL light on the P5 forward overhead panel goes on.

2) Make sure that you hear a chime in the flight deck.

(b) Release the PILOT CALL button.

(c) If the CALL light does not go on and the chime does not sound, then do the Fault Isolation Procedure below.

(d) If the CALL light goes on and the chime sounds, then there was an intermittent fault.

F. Fault Isolation Procedure

(1) Replace the PILOT CALL switch, S33, on the P19 External Power panel.

(a) Do this check of the captain's CALL light:

1) Press and hold the PILOT CALL button on the P19 External Power panel.

a) Make sure the CALL light on the P5 forward overhead panel goes on.

b) Make sure that you hear a chime in the flight deck.

2) Release the PILOT CALL button.

3) If the CALL light goes on and you hear a chime, then you corrected the fault.

——————— END OF TASK ———————

804. Ground Crew to Flight Deck, Call Light Does Not Operate - Fault Isolation

A. Description

(1) The CALL light on the forward overhead panel does not come on, but the call chime sounds when the ground crew pushes the PILOT CALL button on the External Power Panel.

BOEING PROPRIETARY - Copyright © Unpublished Work - See title page for details

B. Possible Causes

(1) Master Dim and Test Switch, S3

(2) Captain's Call Light, L19

(3) Wiring

C. Circuit Breakers

(1) This is the primary circuit breaker related to the fault:

CAPT Electrical System Panel, P18-3

Row	Col	Number	Name
A	9	C00073	PASSENGER CABIN CREW CALL

D. Related Data

(1) (SSM 23-43-11)

(2) (WDM 23-43-11)

E. Initial Evaluation

(1) Do this check of the captain's CALL light:

(a) Set the Master Dim and Test switch, S3, on the P1 main instrument panel, to BRT.

(b) Push and hold the PILOT CALL button, S33, on the P19 External Power panel.

1) Make sure the CALL light on the P5 forward overhead panel goes on.

(c) Release the PILOT CALL button.

(d) If the CALL light does not go on, then do the Fault Isolation Procedure below.

(e) If the CALL light goes on, then there was an intermittent fault.

F. Fault Isolation Procedure

(1) Do this test of the Captain's CALL light, L19:

(a) Set the Master Dim and Test switch, S3, on the P1 main instrument panel, to TEST.

(b) If the CALL light does not go on, then replace the Captain's CALL light.

1) Do the Repair Confirmation at the end of this task.

a) If the Repair Confirmation is not OK, then continue.

(c) If the CALL light goes on, then continue.

(2) Do this check of the wiring:

(a) Open these circuit breakers and install safety tags:

CAPT Electrical System Panel, P18-3

Row	Col	Number	Name
A	9	C00073	PASSENGER CABIN CREW CALL

F/O Electrical System Panel, P6-3

Row	Col	Number	Name
D	11	C00133	INDICATOR MASTER DIM DIM/TST CONT

(b) Remove the Captain's CALL light, L19, from the P5 forward overhead panel.

(c) Remove the PILOT CALL switch, S33, from the P19 External Power panel.

BOEING PROPRIETARY - Copyright © Unpublished Work - See title page for details

(d) Do a check for an open circuit between these pins of the Captain's CALL light, L19, and the PILOT CALL switch, S33:

L19		**S33**
pin 1	- - - - - - - - - - - - - - - - - - - -	pin C

(e) If you find a problem with the wiring, then do these steps:

1) Repair the wiring.
2) Re-install the PILOT CALL switch.
3) Re-install the Captain's CALL light.
4) Remove the safety tags and close these circuit breakers:

CAPT Electrical System Panel, P18-3

Row	Col	Number	Name
A	9	C00073	PASSENGER CABIN CREW CALL

F/O Electrical System Panel, P6-3

Row	Col	Number	Name
D	11	C00133	INDICATOR MASTER DIM DIM/TST CONT

5) Do the Repair Confirmation at the end of this task.

G. Repair Confirmation

(1) Do this check of the captain's CALL light:

(a) Press and hold the PILOT CALL switch, S33, on the P19 External Power panel.

1) Make sure the captain's CALL light, L19, on the P5 forward overhead panel goes on.

(b) Release the PILOT CALL switch.

(c) If the CALL light goes on, then you corrected the fault.

——————— END OF TASK ———————

BOEING PROPRIETARY - Copyright © Unpublished Work - See title page for details

801. Microphone/Headset Problem - Fault Isolation

A. Description

(1) A flight interphone hand microphone, headset, or boom microphone/headset does not operate.

B. Possible Causes

(1) Hand microphone, headset, or boom microphone/headset

(2) Microphone, headset, or boom microphone/headset jack

HAP 001-013, 015-026, 028-041, 044-054, 101-999

(3) Audio Control Panel (ACP), P8-6 (captain's), P8-7 (first officer's), or P5-15 (observer's)

HAP 042, 043

(4) Audio Control Panel (ACP), P8-6 (captain's), P8-7 (first officer's), or P8-53 (observer's)

HAP ALL

(5) Remote Electronic Unit (REU), M1353

(6) Wiring

C. Circuit Breakers

(1) These are the primary circuit breakers related to the fault:

F/O Electrical System Panel, P6-2

Row	Col	Number	Name
C	21	C00560	INTERPHONE POWER F/O DC 2
C	22	C00561	INTERPHONE POWER F/O BAT
C	23	C00239	INTERPHONE POWER CAPT DC 2
C	24	C00240	INTERPHONE POWER CAPT BAT
D	21	C00084	INTPH AND WARN
D	22	C00086	AUDIO F/O
D	23	C00083	AUDIO CAPT
D	24	C00085	AUDIO OBS

D. Related Data

(1) (SSM 23-51-11)

(2) (SSM 23-51-21)

(3) (SSM 23-51-31)

(4) (WDM 23-51-11)

(5) (WDM 23-51-21)

(6) (WDM 23-51-31)

E. Initial Evaluation

(1) Do these steps to prepare the flight interphone for initial evaluation and for fault isolation:

BOEING PROPRIETARY - Copyright © Unpublished Work - See title page for details

HAP 023-026, 028-054, 101-999

(a) Make sure the AURAL WARN MUTE switch on the front panel of the REU is not in the ''Mute'' position.

NOTE: The switch is in ''Mute'' position when it is horizontal to the bottom edge of the front panel.

HAP ALL

(b) Set the SERVICE INTERPHONE switch, S50, on the P5 Overhead Panel to the OFF position.

(c) Connect a microphone and headset to all flight interphone stations.

(d) Push the flight microphone selector switch on all Audio Control Panels (ACPs). The flight microphone selector switch is labelled FLT, FLT INT, or INT.

(e) Push the volume control for the flight microphone selector switch to on.

(2) Do this check of the flight interphone:

(a) Push and hold the test switch on the affected station's Audio Control Panel in the R/T or RADIO position. The switch is labelled R/T - I/C or RADIO - INT.

(b) Speak into the affected station's microphone.

1) Make sure you can hear the voice clearly from the other stations' headset.

(c) Release the test switch.

(d) If the voice is not heard on all headsets, then do the Fault Isolation Procedure below.

(e) If the voice is heard on all headsets, then there was an intermittent fault.

F. Fault Isolation Procedure

(1) Replace the affected hand microphone, headset, or boom microphone/headset.

(a) Do the Repair Confirmation at the end of this task.

1) If the Repair Confirmation is not OK, then continue.

(2) Replace the affected station's hand microphone, headset, or boom microphone/headset jack.

(a) Do the Repair Confirmation at the end of this task.

1) If the Repair Confirmation is not OK, then continue.

(3) Replace the affected Audio Control Panel (ACP),

These are the tasks:

Audio Control Panel Removal, AMM TASK 23-51-02-000-801,

Audio Control Panel Installation, AMM TASK 23-51-02-400-801.

or

These are the tasks:

Audio Control Panel Removal, AMM TASK 23-51-02-000-801,

Audio Control Panel Installation, AMM TASK 23-51-02-400-801.

(a) Do the Repair Confirmation at the end of this task.

1) If the Repair Confirmation is not OK, then continue.

(4) Replace the Remote Electronic Unit (REU), M1353.

These are the tasks:

Remote Electronics Unit (REU) Removal, AMM TASK 23-51-01-000-801,

Remote Electronics Unit (REU) Installation, AMM TASK 23-51-01-000-802.

BOEING PROPRIETARY - Copyright © Unpublished Work - See title page for details

(a) Do the Repair Confirmation at the end of this task.

1) If the Repair Confirmation is not OK, then continue.

(5) Use the SSM and WDM listed in Related Data to do a check of the wires from the remote electronics unit:

(a) Remove the affected station's hand microphone, headset, or boom microphone/headset jack.

(b) Remove the REU, M1353 from the E4-1 shelf. To remove it, do this task: Remote Electronics Unit (REU) Removal, AMM TASK 23-51-01-000-801.

(c) Examine and repair the wires between the REU connector D2501B and the microphone, headset, or boom microphone/headset jack connector.

1) If you found and repaired a wire problem, then do these steps:

a) Re-install the REU. To install it, do this task: Remote Electronics Unit (REU) Installation, AMM TASK 23-51-01-000-802.

b) If it is necessary, re-install the hand microphone, headset, or boom microphone/headset jack.

c) Do the Repair Confirmation at the end of this task.

G. Repair Confirmation

(1) If it is necessary, do these steps to prepare the flight interphone for Repair Confirmation:

(a) Make sure that the SERVICE INTERPHONE switch, S50, on the P5 Overhead Panel to the OFF position.

(b) Make sure that a microphone and headset is connected at all flight interphone stations.

(c) Makes sure that these steps are completed:

1) Push the flight microphone selector switch on all Audio Control Panels (ACPs). The flight microphone selector switch is labelled FLT, FLT INT, or INT.

2) Push the volume control for the flight microphone selector switch to on.

(2) Do this check of the flight interphone:

(a) Push and hold the test switch on the affected station's Audio Control Panel in the R/T or RADIO position. The switch is labelled R/T - I/C or RADIO - INT.

(b) Speak into the affected station's microphone.

1) Make sure you can hear the voice clearly from the other stations' headset.

(c) Release the test switch.

(d) If the voice is heard on all headsets, then you have corrected the problem.

END OF TASK

802. Damaged Microphone/Headset - Fault Isolation

A. Fault Isolation Procedure

(1) Replace the affected hand microphone, headphone, or boom microphone/headset.

END OF TASK

803. Flight Interphone Problem At All Stations - Fault Isolation

A. Description

(1) The flight interphone does not operate at any flight deck station.

BOEING PROPRIETARY - Copyright © Unpublished Work - See title page for details

B. Possible Causes

(1) Remote Electronics Unit (REU), M1353

C. Circuit Breakers

(1) These are the primary circuit breakers related to the fault:

F/O Electrical System Panel, P6-2

Row	Col	Number	Name
C	21	C00560	INTERPHONE POWER F/O DC 2
C	22	C00561	INTERPHONE POWER F/O BAT
C	23	C00239	INTERPHONE POWER CAPT DC 2
C	24	C00240	INTERPHONE POWER CAPT BAT
D	21	C00084	INTPH AND WARN
D	22	C00086	AUDIO F/O
D	23	C00083	AUDIO CAPT
D	24	C00085	AUDIO OBS

D. Related Data

(1) (SSM 23-51-11)

(2) (SSM 23-51-21)

(3) (SSM 23-51-31)

(4) (WDM 23-51-11)

(5) (WDM 23-51-21)

(6) (WDM 23-51-31)

E. Initial Evaluation

(1) Do these steps to prepare the flight interphone for initial evaluation and for fault isolation:

(a) Set the SERVICE INTERPHONE switch, S50, on the P5 Overhead Panel to the OFF position.

(b) Connect a boom mic/headset to both pilots' boom microphone/headset jacks in the flight deck.

(c) Push the flight microphone selector switch on all Audio Control Panels (ACPs). The flight microphone selector switch is labelled FLT, FLT INT, or INT.

(d) Push the volume control for the flight microphone selector switch to on.

(2) Do this check of the flight interphone:

(a) Push and hold the PTT switch on the affected pilot's control wheel to the MIC position.

(b) Speak into the boom microphone.

1) Make sure you can hear the voice clearly from the other pilot's headset.

(c) Release the PTT switch on the control wheel.

(d) Push and hold the PTT switch on the other pilot's control wheel to the MIC position.

(e) Speak into the boom microphone.

1) Make sure you can hear the voice clearly from the other pilot's headset.

(f) Release the PTT switch on the control wheel.

(g) If the voice is not heard on either headset, then do the Fault Isolation Procedure below.

(h) If the voice is heard on both headsets, then there was an intermittent fault.

BOEING PROPRIETARY - Copyright © Unpublished Work - See title page for details

F. Fault Isolation Procedure

(1) Replace the Remote Electronic Unit (REU), M1353.

These are the tasks:

Remote Electronics Unit (REU) Removal, AMM TASK 23-51-01-000-801,

Remote Electronics Unit (REU) Installation, AMM TASK 23-51-01-000-802.

(a) Do this check of the flight interphone:

NOTE: You must do the steps to prepare for fault isolation that are in the Initial Evaluation before you can do this check.

1) Push and hold the PTT switch on the pilot's control wheel to the MIC position.
2) Speak into the boom microphone/headset.
   a) Make sure you can hear the voice clearly from the other pilot's headset.
3) Release the PTT switch on the control wheel.
4) Push and hold the PTT switch on the other pilot's control wheel to the MIC position.
5) Speak into the boom microphone.
   a) Make sure you can hear the voice clearly from the other pilot's headset.
6) Release the PTT switch on the control wheel.
7) If the voice is heard on both headsets, then you corrected the fault.

END OF TASK

804. Flight Interphone Problems At One Station - Fault Isolation

A. Description

(1) The flight interphone does not operate at one station. The other stations operate correctly.

B. Possible Causes

(1) PTT switch, S519 (captain's) or S520 (first officer's)

HAP 031-054, 101-999

(2) Glareshield PTT switch, S1091 (captain's) or S989 (first officer's)

HAP 001-013, 015-026, 028-041, 044-054, 101-999

(3) Audio Control Panel (ACP), P8-6 (captain's), P8-7 (first officer's), or P5-15 (observer's)

HAP 042, 043

(4) Audio Control Panel (ACP), P8-6 (captain's), P8-7 (first officer's), or P8-53 (observer's)

HAP ALL

(5) Remote Electronic Unit (REU), M1353

C. Circuit Breakers

(1) These are the primary circuit breakers related to the fault:

F/O Electrical System Panel, P6-2

Row	Col	Number	Name
C	21	C00560	INTERPHONE POWER F/O DC 2
C	22	C00561	INTERPHONE POWER F/O BAT
C	23	C00239	INTERPHONE POWER CAPT DC 2

BOEING PROPRIETARY - Copyright © Unpublished Work - See title page for details

Row	Col	Number	Name
C	24	C00240	INTERPHONE POWER CAPT BAT
D	21	C00084	INTPH AND WARN
D	22	C00086	AUDIO F/O
D	23	C00083	AUDIO CAPT
D	24	C00085	AUDIO OBS

D. Related Data

(1) (SSM 23-51-11)

(2) (SSM 23-51-21)

(3) (SSM 23-51-31)

(4) (WDM 23-51-11)

(5) (WDM 23-51-21)

(6) (WDM 23-51-31)

E. Initial Evaluation

(1) Do these steps to prepare the flight interphone for initial evaluation and for fault isolation:

(a) Set the SERVICE INTERPHONE switch, S50, on the P5 Overhead Panel to the OFF position.

(b) Connect a microphone and headset to jacks at all flight interphone stations in the flight deck.

(c) Push the flight microphone selector switch on all Audio Control Panels (ACPs). The flight microphone selector switch is labelled FLT, FLT INT, or INT.

(d) Push the volume control for the flight microphone selector switch to on.

(2) Do this check of the flight interphone:

(a) Push and hold the test switch on the affected station's Audio Control Panel in the R/T or RADIO. The switch is labelled R/T - I/C or RADIO - INT.

(b) Speak into the affected station's microphone.

1) Make sure you can hear the voice clearly from the other stations' headset.

(c) Release the test switch.

(d) If the voice is not heard on all headsets, then do the Fault Isolation Procedure below.

(e) If the voice is heard on all headsets, then there was an intermittent fault.

F. Fault Isolation Procedure

(1) Replace the PTT switch, S519 (captain's) or S520 (first officer's).

These are the tasks:

Control Wheel PTT Switch Removal, AMM TASK 23-51-04-000-801,

Control Wheel PTT Switch Installation, AMM TASK 23-51-04-400-801.

(a) Do the Repair Confirmation at the end of this task.

1) If the Repair Confirmation is not OK, then continue.

HAP 031-054, 101-999

(2) Replace the glareshield PTT switch, S1091 (captain's) or S989 (first officer's).

These are the tasks:

BOEING PROPRIETARY - Copyright © Unpublished Work - See title page for details

Control Wheel PTT Switch Removal, AMM TASK 23-51-04-000-801,

Control Wheel PTT Switch Installation, AMM TASK 23-51-04-400-801.

(a) Do the Repair Confirmation at the end of this task.

1) If the Repair Confirmation is not OK, then continue.

HAP ALL

(3) Replace the affected Audio Control Panel (ACP),

These are the tasks:

Audio Control Panel Removal, AMM TASK 23-51-02-000-801,

Audio Control Panel Installation, AMM TASK 23-51-02-400-801.

or

These are the tasks:

Audio Control Panel Removal, AMM TASK 23-51-02-000-801,

Audio Control Panel Installation, AMM TASK 23-51-02-400-801.

(a) Do the Repair Confirmation at the end of this task.

1) If the Repair Confirmation is not OK, then continue.

(4) Replace the Remote Electronic Unit (REU), M1353.

These are the tasks:

Remote Electronics Unit (REU) Removal, AMM TASK 23-51-01-000-801,

Remote Electronics Unit (REU) Installation, AMM TASK 23-51-01-000-802.

(a) Do the Repair Confirmation at the end of this task.

G. Repair Confirmation

(1) If it is necessary, do these steps to prepare the flight interphone for Repair Confirmation:

(a) Make sure that the SERVICE INTERPHONE switch, S50, on the P5 Overhead Panel to the OFF position.

(b) Make sure that a microphone and headset is connected at all flight interphone stations.

(c) Makes sure that these steps are completed:

1) Push the flight microphone selector switch on all Audio Control Panels (ACPs). The flight microphone selector switch is labelled FLT, FLT INT, or INT.

2) Push the volume control for the flight microphone selector switch to on.

(2) Do this check of the flight interphone:

(a) Push and hold the test switch on the affected station's Audio Control Panel in the R/T or RADIO position. The switch is labelled R/T - I/C or RADIO - INT.

(b) Speak into the affected station's microphone.

1) Make sure you can hear the voice clearly from the other stations' headset.

(c) Release the test switch.

(d) If the voice is heard on all headsets, then you have corrected the problem.

END OF TASK

BOEING PROPRIETARY - Copyright © Unpublished Work - See title page for details

805. Captain's Flight Interphone Speaker Problem - Fault Isolation

A. Description

(1) Sound is not heard from the captain's flight interphone speaker.

B. Possible Causes

(1) Captain's Flight Interphone Speaker, M77

(2) Captain's Audio Control Panel, P8-6

(3) Remote Electronic Unit (REU), M1353

(4) Wiring

C. Circuit Breakers

(1) These are the primary circuit breakers related to the fault:

F/O Electrical System Panel, P6-2

Row	Col	Number	Name
C	21	C00560	INTERPHONE POWER F/O DC 2
C	22	C00561	INTERPHONE POWER F/O BAT
C	23	C00239	INTERPHONE POWER CAPT DC 2
C	24	C00240	INTERPHONE POWER CAPT BAT
D	21	C00084	INTPH AND WARN
D	22	C00086	AUDIO F/O
D	23	C00083	AUDIO CAPT
D	24	C00085	AUDIO OBS

D. Related Data

(1) (SSM 23-51-11)

(2) (SSM 23-51-21)

(3) (SSM 23-51-31)

(4) (WDM 23-51-11)

(5) (WDM 23-51-21)

(6) (WDM 23-51-31)

E. Initial Evaluation

(1) Do these steps to prepare the flight interphone for initial evaluation and for fault isolation:

(a) Set the SERVICE INTERPHONE switch, S50, on the P5 Overhead Panel to the OFF position.

(b) Connect a microphone to the first officer's microphone jack.

(c) Set all audio control panels (ACPs) to these conditions:

1) Push all audio monitor switches to off.

2) Push the flight microphone selector switch to on. The flight microphone selector switch is labelled FLT, FLT INT, or INT.

a) Make sure its light comes on.

3) Push the volume control for the flight microphone selector switch. The flight microphone selector switch is labelled FLT, FLT INT, or INT.

a) Make sure its light comes on.

BOEING PROPRIETARY - Copyright © Unpublished Work - See title page for details

4) Turn the volume control for the flight microphone selector switch to the middle position. The flight microphone selector switch is labelled FLT, FLT INT, or INT.

(d) Set the captain's ACP to these conditions:

1) Push the SPKR volume control switch to on.

a) Make sure its light comes on.

2) Turn the SPKR volume control switch to the middle position or to the volume level you are comfortable with.

(2) Do this check of the captain's flight interphone speaker:

(a) Push and hold the PTT switch on the first officer's control wheel to the MIC position.

(b) Speak into the first officer's microphone.

(c) Make sure you can hear the voice clearly from the captain's flight interphone speaker.

(d) If the voice is not heard on the captain's flight interphone speaker, then do the Fault Isolation Procedure below.

(e) If the voice is heard on the captain's flight interphone speaker, then there was an intermittent fault.

F. Fault Isolation Procedure

(1) Replace the captain's flight interphone speaker,

These are the tasks:

Flight Interphone Speaker Removal, AMM TASK 23-51-03-000-802,

Flight Interphone Speaker Installation, AMM TASK 23-51-03-000-804.

(a) Do the Repair Confirmation at the end of this task.

(b) Do the Repair Confirmation at the end of this task.

1) If the Repair Confirmation is not OK, then continue.

(2) Replace the captain's Audio Control Panel (ACP),

These are the tasks:

Audio Control Panel Removal, AMM TASK 23-51-02-000-801,

Audio Control Panel Installation, AMM TASK 23-51-02-400-801.

(a) Do the Repair Confirmation at the end of this task.

1) If the Repair Confirmation is not OK, then continue.

(3) Replace the Remote Electronic Unit (REU),

These are the tasks:

Remote Electronics Unit (REU) Removal, AMM TASK 23-51-01-000-801,

Remote Electronics Unit (REU) Installation, AMM TASK 23-51-01-000-802.

(a) Do the Repair Confirmation at the end of this task.

1) If the Repair Confirmation is not OK, then continue.

(4) Do this check of the wiring:

(a) Remove the REU, M1353 from the E4-1 shelf. To remove it, do this task: Remote Electronics Unit (REU) Removal, AMM TASK 23-51-01-000-801.

(b) Remove the captain's flight interphone speaker. To remove it, do this task: Flight Interphone Speaker Removal, AMM TASK 23-51-03-000-802.

BOEING PROPRIETARY - Copyright © Unpublished Work - See title page for details

(c) Do a check for an open circuit between connector D2501B, pin D8 of the REU, M1353, and connector D127, pin 1 of the captain's flight interphone speaker, M77:

(d) If there is an open circuit, then do these steps:

1) Repair the wiring.

2) Re-install the captain's flight interphone speaker. To install it, do this task: Flight Interphone Speaker Installation, AMM TASK 23-51-03-000-804.

3) Re-install the REU. To install it, do this task: Remote Electronics Unit (REU) Installation, AMM TASK 23-51-01-000-802.

4) Do the Repair Confirmation at the end of this task.

G. Repair Confirmation

(1) Do this check of the captain's flight interphone speaker:

NOTE: You must do the steps to prepare for fault isolation that are in the Initial Evaluation before you can do this check.

(a) Push and hold the PTT switch on the first officer's control wheel to the MIC position.

(b) Speak into the first officer's microphone.

(c) Make sure you can hear the voice clearly from the captain's flight interphone speaker.

(d) If the voice is heard on the captain's flight interphone speaker, then you corrected the fault.

END OF TASK

806. First Officer's Flight Interphone Speaker Problem - Fault Isolation

A. Description

(1) Sound is not heard from the first officer's flight interphone speaker.

B. Possible Causes

(1) Remote Electronic Unit (REU), M1353

(2) First Officer's Audio Control Panel, P8-6

(3) First Officer's Flight Interphone Speaker, M78

(4) Wiring

C. Circuit Breakers

(1) These are the primary circuit breakers related to the fault:

F/O Electrical System Panel, P6-2

Row	Col	Number	Name
C	21	C00560	INTERPHONE POWER F/O DC 2
C	22	C00561	INTERPHONE POWER F/O BAT
C	23	C00239	INTERPHONE POWER CAPT DC 2
C	24	C00240	INTERPHONE POWER CAPT BAT
D	21	C00084	INTPH AND WARN
D	22	C00086	AUDIO F/O
D	23	C00083	AUDIO CAPT
D	24	C00085	AUDIO OBS

D. Related Data

(1) (SSM 23-51-11)

BOEING PROPRIETARY - Copyright © Unpublished Work - See title page for details

(2) (SSM 23-51-21)

(3) (SSM 23-51-31)

(4) (WDM 23-51-11)

(5) (WDM 23-51-21)

(6) (WDM 23-51-31)

E. Initial Evaluation

(1) Do these steps to prepare the flight interphone for initial evaluation and for fault isolation:

(a) Set the SERVICE INTERPHONE switch, S50, on the P5 Overhead Panel to the OFF position.

(b) Connect a microphone to the captain's microphone jack.

(c) Set all audio control panels (ACPs) to these conditions:

1) Push all audio monitor switches to off.

2) Push the flight microphone selector switch to on. The flight microphone selector switch is labelled FLT, FLT INT, or INT.

a) Make sure its light comes on.

3) Push the volume control for the flight microphone selector switch. The flight microphone selector switch is labelled FLT, FLT INT, or INT.

a) Make sure its light comes on.

(d) Set the first officer's ACP to these conditions:

1) Push the SPKR volume control switch to on.

a) Make sure its light comes on.

2) Turn the SPKR volume control switch to the middle position or to the volume level you are comfortable with.

(2) Do this check of the first officer's flight interphone speaker:

(a) Push and hold the PTT switch on the captain's control wheel to the MIC position.

(b) Speak into the captain's microphone.

(c) Make sure you can hear the voice clearly from the first officer's flight interphone speaker.

(d) If the voice is not heard on the first officer's flight interphone speaker, then do the Fault Isolation Procedure below.

(e) If the voice is heard on the first officer's flight interphone speaker, then there was an intermittent fault.

F. Fault Isolation Procedure

(1) Replace the first officer's Audio Control Panel (ACP),

These are the tasks:

Audio Control Panel Removal, AMM TASK 23-51-02-000-801,

Audio Control Panel Installation, AMM TASK 23-51-02-400-801.

(a) Do the Repair Confirmation at the end of this task.

1) If the Repair Confirmation is not OK, then continue.

(2) Replace the Remote Electronic Unit (REU),

These are the tasks:

BOEING PROPRIETARY - Copyright © Unpublished Work - See title page for details

Remote Electronics Unit (REU) Removal, AMM TASK 23-51-01-000-801,

Remote Electronics Unit (REU) Installation, AMM TASK 23-51-01-000-802.

(a) Do the Repair Confirmation at the end of this task.

1) If the Repair Confirmation is not OK, then continue.

(3) Replace the first officer's flight interphone speaker,

These are the tasks:

Flight Interphone Speaker Removal, AMM TASK 23-51-03-000-802,

Flight Interphone Speaker Installation, AMM TASK 23-51-03-000-804.

(a) Do the Repair Confirmation at the end of this task.

1) If the Repair Confirmation is not OK, then continue.

(4) Do this check of the wiring:

(a) Remove the REU, M1353 from the E4-1 shelf. To remove it, do this task: Remote Electronics Unit (REU) Removal, AMM TASK 23-51-01-000-801.

(b) Remove the first officer's flight interphone speaker. To remove it, do this task: Flight Interphone Speaker Removal, AMM TASK 23-51-03-000-802.

(c) Do a check for an open circuit between connector D2501B, pin C11 of the REU, M1353, and connector D129, pin 1 of the first officer's flight interphone speaker, M78:

(d) If there is an open circuit, then do these steps:

1) Repair the wiring.

2) Re-install the first officer's flight interphone speaker. To install it, do this task: Flight Interphone Speaker Installation, AMM TASK 23-51-03-000-804.

3) Re-install the REU. To install it, do this task: Remote Electronics Unit (REU) Installation, AMM TASK 23-51-01-000-802.

4) Do the Repair Confirmation at the end of this task.

G. Repair Confirmation

(1) Do this check of the first officer's flight interphone speaker:

NOTE: You must do the steps to prepare for fault isolation that are in the Initial Evaluation before you can do this check.

(a) Push and hold the PTT switch on the captain's control wheel to the MIC position.

(b) Speak into the captain's microphone.

(c) Make sure you can hear the voice clearly from the first officer's flight interphone speaker.

(d) If the voice is heard on the first officer's flight interphone speaker, then you corrected the fault.

END OF TASK

807. Audio Control Panel Problems - Fault Isolation

A. Description

(1) The audio control panel does not operate correctly at one station. The other stations operate correctly.

B. Possible Causes

BOEING PROPRIETARY - Copyright © Unpublished Work - See title page for details

HAP 001-013, 015-026, 028-041, 044-054, 101-999

(1) Audio Control Panel (ACP), P8-6 (captain's), P8-7 (first officer's), or P5-15 (observer's)

HAP 042, 043

(2) Audio Control Panel (ACP), P8-6 (captain's), P8-7 (first officer's), or P8-53 (observer's)

HAP ALL

C. Circuit Breakers

(1) These are the primary circuit breakers related to the fault:

F/O Electrical System Panel, P6-2

Row	Col	Number	Name
C	21	C00560	INTERPHONE POWER F/O DC 2
C	22	C00561	INTERPHONE POWER F/O BAT
C	23	C00239	INTERPHONE POWER CAPT DC 2
C	24	C00240	INTERPHONE POWER CAPT BAT
D	21	C00084	INTPH AND WARN
D	22	C00086	AUDIO F/O
D	23	C00083	AUDIO CAPT
D	24	C00085	AUDIO OBS

D. Related Data

(1) (SSM 23-51-11)

(2) (SSM 23-51-21)

(3) (SSM 23-51-31)

(4) (WDM 23-51-11)

(5) (WDM 23-51-21)

(6) (WDM 23-51-31)

E. Initial Evaluation

(1) Do these steps to prepare the audio control panel for initial evaluation and for fault isolation:

(a) Visually examine the audio control panel.

1) Identify the light or switch that does not operate correctly.

(2) Replace the affected Audio Control Panel (ACP),

These are the tasks:

Audio Control Panel Removal, AMM TASK 23-51-02-000-801,

Audio Control Panel Installation, AMM TASK 23-51-02-400-801.

or

These are the tasks:

Audio Control Panel Removal, AMM TASK 23-51-02-000-801,

Audio Control Panel Installation, AMM TASK 23-51-02-400-801.

(a) Do the Repair Confirmation at the end of this task.

F. Repair Confirmation

(1) Do this check of the audio control panel:

BOEING PROPRIETARY - Copyright © Unpublished Work - See title page for details

(a) Operate the light or switch that did not operate correctly.

(b) If the light or switch now operates correctly, then you corrected the fault.

END OF TASK

BOEING PROPRIETARY - Copyright © Unpublished Work - See title page for details

801. Voice Recorder Monitor Jack Signal Problem - Fault Isolation

A. Description

(1) No sound is heard through the headset/headphone.

B. Possible Causes

(1) Headset/headphone

(2) Voice recorder unit, M383

(3) Voice recorder control panel, P5-7

(4) Wiring or connector.

C. Circuit Breakers

(1) This is the primary circuit breaker related to the fault:

CAPT Electrical System Panel, P18-2

Row	Col	Number	Name
D	7	C00107	VOICE RCDR

D. Related Data

(1) (SSM 23-71-11)

(2) (WDM 23-71-01)

E. Initial Evaluation

(1) Connect the interphone, COM-1614 to the voice recorder control panel at the pilot's overhead panel, P5.

(2) Set the CVR AUTO/ON switch to the ON position.

NOTE: Both engines must be off for at least five minutes.

(a) Make sure that the CVR AUTO/ON switch stays in the ON position.

(3) Set the Audio Control Panel volume switches to the off position.

(a) Make sure that you can hear flight deck conversation in the headset.

(b) Push and hold the TEST switch on the voice recorder control panel.

1) If you hear a tone through the headset at the headphone jack, then continue.

2) If you do not hear a tone through the headset at the headphone jack, then do the Fault Isolation procedure below.

(4) Release the TEST switch on the voice recorder control panel.

(a) Speak into the microphones for the captain, the first officer, and the first observer, and the area microphone on the P5 overhead panel.

1) If you hear your voice on all four channels through the headset at the monitor jack, then there was an intermittent fault.

2) If you can not hear your voice on all four channels through the headset at the monitor jack, then do the Fault Isolation Procedure below.

F. Fault Isolation Procedure

(1) Replace the voice recorder, M383.

These are the tasks:

BOEING PROPRIETARY - Copyright © Unpublished Work - See title page for details

Voice Recorder Removal, AMM TASK 23-71-11-000-801,

Voice Recorder Installation, AMM TASK 23-71-11-400-801.

(a) Push and hold the TEST switch on the voice recorder control panel.

(b) If you hear a modulated sound through the headset at the headphone jack, then you corrected the fault.

(c) If you do not hear a modulated sound through the headset at the headphone jack, then continue.

(d) Release the TEST switch on the voice recorder control panel.

(2) Replace the voice recorder control panel, P5-7.

These are the tasks:

Voice Recorder Control Panel Removal, AMM TASK 23-71-12-000-801,

Voice Recorder Control Panel Installation, AMM TASK 23-71-12-400-801.

(a) Push and hold the TEST switch on the voice recorder control panel.

(b) If you hear a modulated sound through the headset at the headphone jack, then you corrected the fault.

(c) If you do not hear a modulated sound through the headset at the headphone jack, then continue.

(d) Release the TEST switch on the voice recorder control panel.

(3) Do this check of the wiring:

(a) Remove the voice recorder control panel, P5-7. To remove it, do this task: Voice Recorder Control Panel Removal, AMM TASK 23-71-12-000-801.

(b) Do a wiring check between these pins of connector D179, at the P5 overhead panel, and connector D177, at the voice recorder rack.

D179		D177
pin B	- - - - - - - - - - - - - - - - - - - -	pin 13
pin C	- - - - - - - - - - - - - - - - - - - -	pin 14
pin L	- - - - - - - - - - - - - - - - - - - -	pin 47
pin K	- - - - - - - - - - - - - - - - - - - -	pin 45
pin V	- - - - - - - - - - - - - - - - - - - -	pin 5
pin W	- - - - - - - - - - - - - - - - - - - -	pin 6

(c) If you find a problem with the wiring, then do these steps:

1) Repair the wiring.

2) Re-install the voice recorder unit, M383. To install it, do this task:Voice Recorder Installation, AMM TASK 23-71-11-400-801.

3) Re-install the voice recorder control panel, P5-7. To install it, do this task:Voice Recorder Control Panel Installation, AMM TASK 23-71-12-400-801.

4) Push the TEST switch on the voice recorder control panel for 3 to 5 seconds.

5) If you hear a modulated sound through the headset at the headphone jack, then you corrected the fault.

END OF TASK

BOEING PROPRIETARY - Copyright © Unpublished Work - See title page for details

804. Voice Recorder STATUS Light or TEST Light Problem - Fault Isolation

A. Description

(1) When you push the TEST button, the STATUS or TEST light does not come on momentarily.

B. Possible Causes

(1) Voice recorder unit, M383

(2) Voice recorder control panel, P5-7

(3) Wiring or connector.

C. Circuit Breakers

(1) This is the primary circuit breaker related to the fault:

CAPT Electrical System Panel, P18-2

Row	Col	Number	Name
D	7	C00107	VOICE RCDR

D. Related Data

(1) (SSM 23-71-11)

(2) (WDM 23-71-01)

E. Initial Evaluation

(1) Set the CVR AUTO/ON switch to the ON position.

NOTE: Both engines must be off for at least 5 minutes.

(a) Make sure that the CVR AUTO/ON switch stays in the ON position.

(2) Push the TEST button on the voice recorder panel.

(a) If the STATUS or TEST light comes on momentarily, then there was an intermittent problem.

(b) If the STATUS or TEST light does not come on momentarily, then do the Fault Isolation Procedure below.

F. Fault Isolation Procedure

(1) Look at the front panel of the voice recorder.

(a) If the BITE indicator comes on and stays on, then replace the voice recorder unit, M383.

These are the tasks:

Voice Recorder Removal, AMM TASK 23-71-11-000-801,

Voice Recorder Installation, AMM TASK 23-71-11-400-801.

1) Push the TEST button on the voice recorder panel.

a) If the STATUS or TEST light comes on momentarily, then you corrected the fault.

b) If the STATUS or TEST light does not come on momentarily, then continue.

(b) If the BITE indicator does not come on, then continue.

(2) Replace the voice recorder control panel, P5-7.

These are the tasks:

Voice Recorder Control Panel Removal, AMM TASK 23-71-12-000-801,

BOEING PROPRIETARY - Copyright © Unpublished Work - See title page for details

Voice Recorder Control Panel Installation, AMM TASK 23-71-12-400-801.

(a) Push the TEST button on the voice recorder panel.

1) If the STATUS or TEST light comes on momentarily, then you corrected the fault.

2) If the STATUS or TEST light does not come on momentarily, then continue.

(3) Do this check of the wiring:

(a) Remove the voice recorder control panel, P5-7. To remove it, do this task: Voice Recorder Control Panel Removal, AMM TASK 23-71-12-000-801.

(b) Remove the voice recorder, M383. To remove it, do this task: Voice Recorder Removal, AMM TASK 23-71-11-000-801.

(c) Do a wiring check between these pins of connector D179, at the P5 overhead panel and connector D177 at the voice recorder rack.

D179		D177
pin D	- - - - - - - - - - - - - - - - - - - -	pin 15
pin E	- - - - - - - - - - - - - - - - - - - -	pin 16

(d) If you find a problem with the wiring, then do these steps:

1) Repair the wiring.

2) Re-install the voice recorder unit, M383. To install it, do this task: Voice Recorder Installation, AMM TASK 23-71-11-400-801.

3) Re-install the voice recorder control panel, P5-7. To install it, do this task: Voice Recorder Control Panel Installation, AMM TASK 23-71-12-400-801.

4) Push the TEST switch on the voice recorder control panel.

5) If you see the STATUS light comes on momentarily, then you corrected the fault.

——————— END OF TASK ———————

805. CVR System Operation Problem (Airplanes With AUTO/ON Switch) - Fault Isolation

A. Description

(1) Cockpit voice recorder (CVR) system does not operate correctly.

B. Possible Causes

(1) Voice recorder unit, M383

(2) Voice recorder control panel, P5-7

(3) CVR AUTO/ON switch, P5-88

(4) CVR sense engine run relay, R779

(5) CVR switch latching relay, R780

(6) Engine 1 running relay, R737

(7) Engine 2 running relay, R738

(8) Wiring problem

BOEING PROPRIETARY - Copyright © Unpublished Work - See title page for details

C. Circuit Breakers

(1) These are the primary circuit breakers related to the fault:

CAPT Electrical System Panel, P18-2

Row	Col	Number	Name
C	7	C01537	VOICE RCDR RELAY
D	7	C00107	VOICE RCDR

D. Related Data

(1) (SSM 23-71-11)

(2) (WDM 23-71-01)

E. Initial Evaluation

(1) Do these steps to do the Initial Evaluation:

(a) Connect the interphone, COM-1614 to the HEADPHONE/HEADSET jack on the voice recorder control panel.

(b) Set the left engine start lever to the IDLE position.

1) Make sure that the right engine start lever is in the OFF position.

2) Wait approximately 5 minutes.

NOTE: The CDS will energize the engine running relay 5 minutes after you put the start lever in the IDLE position.

(c) Push and hold the TEST switch on the CVR control panel (P5 panel) for 5 seconds.

NOTE: The test continues as long as the TEST switch is pushed.

1) Make sure that the light comes on once on the CVR control panel.

(d) If the test is not satisfactory, then make a note that there is a problem with the left engine/CVR operation and continue.

(e) Set the left engine start lever to the OFF position.

1) Wait approximately 5 minutes.

NOTE: The voice recorder will continue to operate for 5 minutes after both engines have stopped running, or engine running simulation has been discontinued.

(f) Set the right engine start lever to the IDLE position.

1) Wait approximately 5 minutes.

NOTE: The CDS will energize the engine running relay 5 minutes after you put the start lever in the IDLE position.

(g) Push and hold the TEST switch on the CVR control panel (P5 panel) for 5 seconds.

NOTE: The test continues as long as the TEST switch is pushed.

1) Make sure that the light comes on once on the CVR control panel.

(h) If the test was not satisfactory, then make a note that there is a problem with the right engine/CVR operation and continue.

(i) Make sure that the left and right engine start levers are each set to the off position.

1) Wait approximately 5 minutes.

(j) Set the CVR AUTO/ON switch (P5 overhead panel) to the ON position.

NOTE: Both engines must be off for at least 5 minutes.

BOEING PROPRIETARY - Copyright © Unpublished Work - See title page for details

1) Make sure that the CVR AUTO/ON switch stays in the ON position.
2) If the CVR AUTO/ON switch does not stay in the ON position, then go to the Fault Isolation Procedure - CVR AUTO/ON Switch Operation Problem, Switch Does Not Stay ON.

(k) Push and hold the TEST switch on the CVR control panel (P5 panel) for 5 seconds.

NOTE: The test continues as long as the TEST switch is pushed.

1) Make sure that the light comes on once on the CVR control panel.

(l) Release the TEST switch.

(m) If the test was not satisfactory, then make a note that there is a problem with the CVR AUTO/ON switch operation and continue.

(2) If the CVR did not operate correctly, then do these steps:

(a) If the CVR did not operate correctly for all of the conditions above, then do the Fault Isolation Procedure - CVR System Operation Problem.

(b) If there was a problem with the left and right engine/CVR operation, then do the Fault Isolation Procedure - Left and Right Engine/CVR Operation Problem.

(c) If there was a problem with the left engine/CVR operation, then do the Fault Isolation Procedure - Left Engine/CVR Operation Problem.

(d) If there was a problem with the right engine/CVR operation, then do the Fault Isolation Procedure - Right Engine/CVR Operation Problem.

(e) If there was a problem with the CVR AUTO/ON switch operation, then do the Fault Isolation Procedure - CVR AUTO/ON Switch Operation Problem.

(f) If there was a problem with the CVR AUTO/ON switch operation where the switch did not stay ON, then do the Fault Isolation Procedure - CVR AUTO/ON Switch Operation Problem, Switch Does Not Stay ON.

(3) If the CVR did operate correctly, then there was an intermittent fault.

F. Fault Isolation Procedure - CVR System Operation Problem

(1) Replace the voice recorder, M383.

These are the tasks:

Voice Recorder Removal, AMM TASK 23-71-11-000-801,

Voice Recorder Installation, AMM TASK 23-71-11-400-801.

(a) Do the Repair Confirmation at the end of this task.

(b) If the Repair Confirmation is not satisfactory, then continue.

(2) Replace the voice recorder control panel, P5-7.

These are the tasks:

Voice Recorder Control Panel Removal, AMM TASK 23-71-12-000-801,

Voice Recorder Control Panel Installation, AMM TASK 23-71-12-400-801.

(a) Do the Repair Confirmation at the end of this task.

(b) If the Repair Confirmation is not satisfactory, then continue.

(3) Do this check of the wiring to the voice recorder:

(a) Set one of the two engine start levers to the IDLE position.

(b) Remove the voice recorder, M383. To remove it, do this task: Voice Recorder Removal, AMM TASK 23-71-11-000-801.

BOEING PROPRIETARY - Copyright © Unpublished Work - See title page for details

(c) Remove the safety tag and close this circuit breaker:

CAPT Electrical System Panel, P18-2

Row	Col	Number	Name
D	7	C00107	VOICE RCDR

(d) Do a check for 115V AC between pin 2 and pin 3 (ground) of connector D177 for the voice recorder.

(e) If there is not 115V AC between pin 2 and pin 3 of connector D177, then do these steps:

1) Do a check for 115V AC between the load terminal of VOICE RCDR circuit breaker, C107 and structure ground.

2) If there is not 115V AC at the load terminal, then do these steps:

a) Replace the following circuit breaker:

CAPT Electrical System Panel, P18-2

Row	Col	Number	Name
D	7	C00107	VOICE RCDR

b) Open this circuit breaker and install safety tag:

CAPT Electrical System Panel, P18-2

Row	Col	Number	Name
D	7	C00107	VOICE RCDR

c) Re-install the voice recorder, M383. To install it, do this task: Voice Recorder Installation, AMM TASK 23-71-11-400-801.

d) Do the Repair Confirmation at the end of this task.

3) If there is 115V AC at the load terminal, then do these steps:

a) Repair the wiring between pin 2 of D177 and the circuit breaker, C107.

b) Do the Repair Confirmation at the end of this task.

(f) If there is 115V AC between pin 2 and pin 3 of connector D177, then continue.

(4) Do this check of the wiring to the CVR AUTO/ON switch:

(a) Disconnect connector D11125 from the CVR AUTO/ON switch.

(b) Make sure that this circuit breaker is closed:

CAPT Electrical System Panel, P18-2

Row	Col	Number	Name
C	7	C01537	VOICE RCDR RELAY

(c) Do a check for 28 VDC between pin 4 of connector D11125 and structure ground.

(d) If there is not 28 VDC at pin 4 of D11125, then do these steps:

1) Do a check for 28 VDC between the load terminal of VOICE RCDR RELAY circuit breaker, C1537 and structure ground.

2) If there is not 28 VDC at the load terminal of VOICE RCDR RELAY circuit breaker C1537, then do these steps:

a) Replace the circuit breaker C1537.

b) Re-connect connector D11125 to the CVR AUTO/ON switch.

BOEING PROPRIETARY - Copyright © Unpublished Work - See title page for details

c) Re-install the voice recorder, M383. To install it, do this task: Voice Recorder Installation, AMM TASK 23-71-11-400-801.

d) Do the Repair Confirmation at the end of this task.

3) If there is 28 VDC at the load terminal of VOICE RCDR RELAY circuit breaker C1537, then do these steps:

a) Repair the wiring between pin 4 of D11125 and the circuit breaker, C1537.

b) Re-connect connector D11125 to the CVR AUTO/ON switch.

c) Re-install the voice recorder, M383. To install it, do this task: Voice Recorder Installation, AMM TASK 23-71-11-400-801.

d) Do the Repair Confirmation at the end of this task.

(e) If there is 28 VDC at pin 4 of the CVR AUTO/ON switch, then re-connect connector D11125 to the CVR AUTO/ON switch and continue.

(5) Do this check of the wiring between the voice recorder control panel and the voice recorder:

(a) Remove the voice recorder control panel, P5-7. To remove it, do this task: Voice Recorder Control Panel Removal, AMM TASK 23-71-12-000-801.

(b) Do a wiring check between these pins of connector D179, at the P5 overhead panel, and connector D177, for the voice recorder.

D179		D177
pin A	- - - - - - - - - - - - - - - - - - - -	pin 12
pin E	- - - - - - - - - - - - - - - - - - - -	pin 16
pin D	- - - - - - - - - - - - - - - - - - - -	pin 15
pin W	- - - - - - - - - - - - - - - - - - - -	pin 6
pin V	- - - - - - - - - - - - - - - - - - - -	pin 5
pin C	- - - - - - - - - - - - - - - - - - - -	pin 14
pin L	- - - - - - - - - - - - - - - - - - - -	pin 47
pin K	- - - - - - - - - - - - - - - - - - - -	pin 45
pin B	- - - - - - - - - - - - - - - - - - - -	pin 13
pin F	- - - - - - - - - - - - - - - - - - - -	pin 17

(c) If you find a problem with the wiring, then do these steps:

1) Repair the wiring.

2) Re-install the voice recorder, M383. To install it, do this task: Voice Recorder Installation, AMM TASK 23-71-11-400-801.

3) Re-install the voice recorder control panel, P5-7. To install it, do this task: Voice Recorder Control Panel Installation, AMM TASK 23-71-12-400-801.

4) Do the Repair Confirmation at the end of this task.

G. Fault Isolation Procedure - Left and Right Engine/CVR Operation Problem

(1) Set one of the two engine start levers to the IDLE position.

(2) Do this task: Proximity Switch Electronics Unit (PSEU) BITE Procedure, 32-09 TASK 801.

(a) If the PSEU BITE test shows an ENGINE RUN fault, then go to the fault isolation task for the applicable maintenance message to correct the fault.

1) Do the Repair Confirmation at the end of this task.

2) If the Repair Confirmation is not satisfactory, then continue.

(b) If the PSEU BITE test does not show an ENGINE RUN fault, then continue.

BOEING PROPRIETARY - Copyright © Unpublished Work - See title page for details

(3) Replace the CVR sense engine run relay, R779.

NOTE: R779 is in the J22 junction box.

(a) Do the Repair Confirmation at the end of this task.

(b) If the Repair Confirmation is not satisfactory, then continue.

(4) Do this check of the wiring:

(a) Remove the CVR sense engine run relay, R779.

(b) Do a check for 115 VAC at pin A2 of connector D11073 for the relay.

(c) If there is not 115 VAC at pin A2 of R779, then do these steps:

1) Do a check for 115 VAC between the load terminal of VOICE RECORDER circuit breaker, C107 and structure ground.

2) If there is not 115 VAC at the load terminal of VOICE RECORDER circuit breaker C107, then do these steps:

a) Replace the circuit breaker C107.

b) Re-install the CVR sense engine run relay, R779.

c) Do the Repair Confirmation at the end of this task.

3) If there is 115 VAC at the load terminal of VOICE RECORDER circuit breaker C107, then do these steps:

a) Repair the wiring between pin A2 of D11073 and the circuit breaker.

b) Re-install the CVR sense engine run relay, R779.

c) Do the Repair Confirmation at the end of this task.

(d) If there is 115 VAC at pin A2 of D11073, then continue.

(5) Do this check of the wiring:

(a) Do a check for 28 VDC between pin X1 and pin X2 (ground) of connector D11073.

(b) If there is not 28 VDC between pin X1 and pin X2 of D11073, then do these steps:

1) Do a check for 28 VDC at the load terminal of the VOICE RCDR RELAY circuit breaker, C1537.

2) If there is not 28 VDC at C1537, then do these steps:

a) Replace the circuit breaker C1537.

b) Re-install the CVR sense engine run relay, R779.

c) Do the Repair Confirmation at the end of this task.

3) If there is 28 VDC at the load terminal of the VOICE RCDR RELAY circuit breaker, C1537, then do these steps:

a) Repair the wiring between pin X1 of D11073 and the circuit breaker.

b) Re-install the CVR sense engine run relay, R779.

c) Do the Repair Confirmation at the end of this task.

(c) If there is 28 VDC from X1 to X2 of D11073, then continue.

(6) Do this check of the ground circuit for the CVR sense engine run relay, R779:

(a) Make sure pin C1 of connector D11073 goes to ground.

(b) If pin C1 goes does not go to ground, then do these steps:

1) Repair the wiring between pin C1 of D11073 and structure ground.

BOEING PROPRIETARY - Copyright © Unpublished Work - See title page for details

a) Re-install the CVR sense engine run relay, R779.

b) Do the Repair Confirmation at the end of this task.

H. Fault Isolation Procedure - Left Engine/CVR Operation Problem

(1) Replace the engine 1 running relay, R737.

NOTE: R737 is in the J22 junction box.

(a) Do the Repair Confirmation at the end of this task.

(b) If the Repair Confirmation is not satisfactory, then continue.

(2) Do this check of the wiring:

(a) Remove the engine 1 running relay, R737.

(b) Make sure that pin C2 of connector D12538 for the relay R737, goes to ground.

(c) If pin C2 of D12538 does not go to ground, then do these steps:

1) Repair the wiring between pin C2 of D12538 and structure ground.

2) Re-install the engine 1 running relay, R737.

3) Do the Repair Confirmation at the end of this task.

(d) If pin C2 of D12538 goes to ground, then continue.

(3) Do this check of the wiring between the CVR sense engine run relay, R779 and the engine 1 running relay, R737:

(a) Remove the CVR sense engine run relay, R779.

NOTE: R779 is in the J22 junction box.

(b) Do a check for an open circuit between these pins of connector D11073 for relay R779 and connector D12538 for relay R737:

D11073		**D12538**
pin C1	- - - - - - - - - - - - - - - - - -	pin C1

1) Repair the wiring.

2) Re-install the engine 1 running relay, R737.

3) Re-install the CVR sense engine run relay, R779.

4) Do the Repair Confirmation at the end of this task.

I. Fault Isolation Procedure - Right Engine/CVR Operation Problem

(1) Replace the engine 2 running relay, R738.

NOTE: R738 is in the J24 junction box.

(a) Do the Repair Confirmation at the end of this task.

(b) If the Repair Confirmation is not satisfactory, then continue.

(2) Do this check of the wiring:

(a) Remove the engine 2 running relay, R738.

(b) Make sure that pin C2 of connector D12540 for the relay R738, goes to ground.

(c) If pin C2 of D12540 does not go to ground, then do these steps:

1) Repair the wiring between pin C2 of D12540 and structure ground.

2) Re-install the engine 2 running relay, R738.

3) Do the Repair Confirmation at the end of this task.

BOEING PROPRIETARY - Copyright © Unpublished Work - See title page for details

(d) If pin C2 of D12540 goes to ground, then continue.

(3) Do this check of the wiring between the CVR sense engine run relay, R779 and the engine 2 running relay, R738:

(a) Remove the CVR sense engine run relay, R779.

NOTE: R779 is in the J22 junction box.

(b) Do a check for an open circuit between these pins of connector D11073 for relay R779 and connector D12540 for relay R738:

D11073		D12540
pin C1	- - - - - - - - - - - - - - - - - -	pin C1

1) Repair the wiring.
2) Re-install the engine 2 running relay, R738.
3) Re-install the CVR sense engine run relay, R779.
4) Do the Repair Confirmation at the end of this task.

J. Fault Isolation Procedure - CVR AUTO/ON Switch Operation Problem

(1) Do this check for 115 VAC to the CVR AUTO/ON switch:

(a) Disconnect connector D11125 from the CVR AUTO/ON switch, P5-88.

(b) Do a check for 115 VAC at pin 1, of connector D11125.

(c) If there is not 115 VAC at pin 1 of D11125, then do these steps:

1) Do a check for 115 VAC at the load terminal of circuit breaker, C107.
2) If there is 115 VAC at the load terminal of circuit breaker C107, then do these steps:
   a) Repair the wiring between pin 1 of D11125 and the circuit breaker.
   b) Re-connect connector D11125 to the CVR AUTO/ON switch, P5-88.
   c) Do the Repair Confirmation at the end of this task.
3) If there is not 115 VAC at the load terminal of circuit breaker C107, then do these steps:
   a) Replace the circuit breaker, C107.
   b) Re-connect connector D11125 to the CVR AUTO/ON switch, P5-88.
   c) Do the Repair Confirmation at the end of this task.

(d) If there is 115 VAC at pin 1 of D11125, then continue.

(2) Replace the CVR AUTO/ON switch, P5-88.

(a) Do the Repair Confirmation at the end of this task.

(b) If the Repair Confirmation is not satisfactory, then continue.

(3) Do this check of the wiring between the CVR AUTO/ON switch and the voice recorder:

(a) Disconnect connector D11125 from the CVR AUTO/ON switch, P5-88.

(b) Remove the voice recorder, M383. To remove it, do this task: Voice Recorder Removal, AMM TASK 23-71-11-000-801.

(c) Do a check of the wiring between these pins of connector D11125 for the CVR AUTO/ON switch and connector D177 for the voice recorder:

D11125		D177
pin 3	- - - - - - - - - - - - - - - - - -	pin 2

(d) Repair the wiring.

BOEING PROPRIETARY - Copyright © Unpublished Work - See title page for details

(e) Re-install the voice recorder, M383. To install it, do this task: Voice Recorder Installation, AMM TASK 23-71-11-400-801.

(f) Re-connect connector D11125 to the CVR AUTO/ON switch, P5-88.

(g) Do the Repair Confirmation at the end of this task.

K. Fault Isolation Procedure - CVR AUTO/ON Switch Operation Problem, Switch Does Not Stay ON

(1) Do this check for 28 VDC at the CVR AUTO/ON switch:

(a) Make sure that the engines have been off for at least 5 minutes.

(b) Disconnect connector D11125 from the CVR AUTO/ON switch, P5-88.

(c) Do a check for 28 VDC at pin 4 of D11125.

(d) If there is not 28 VDC at pin 4 of D11125, then do these steps:

1) Do a check for 28 VDC from the load terminal of VOICE RCDR RELAY circuit breaker C1537 to structure ground.

2) If there is not 28 VDC at the load terminal of VOICE RCDR RELAY circuit breaker C1537, then do these steps:

a) Replace the circuit breaker, C1537.

b) Re-connect connector D11125 to the CVR AUTO/ON switch, P5-88.

c) Do the Repair Confirmation at the end of this task.

3) If there is 28 VDC at the load terminal of circuit breaker C1537, then do these steps:

a) Repair the wiring between pin 4 of D11125 and the circuit breaker.

b) Re-connect connector D11125 to the CVR AUTO/ON switch, P5-88.

c) Do the Repair Confirmation at the end of this task.

(e) If there is 28 VDC at pin 4 of D11125, then continue.

(2) Do this check of the CVR AUTO/ON switch:

(a) Make sure that pin 5 of connector D11125 for the CVR AUTO/ON switch goes to ground.

(b) If pin 5 of D11125 goes to ground, then do these steps:

1) Replace the CVR AUTO/ON switch, P5-88.

2) Do the Repair Confirmation at the end of this task.

(c) If pin 5 of D11125 does not go to ground, then re-connect connector D11125 to the CVR AUTO/ON switch and continue.

(3) Do this check for 28 VDC at the CVR switch latching relay, R780:

(a) Remove the CVR switch latching relay, R780.

NOTE: R780 is in the J22 junction box.

(b) Do a check for 28 VDC between pin X1 of connector D11131 for the relay, R780 and structure ground.

(c) If there is not 28 VDC at pin X1 of D11131, then do these steps:

1) Repair the wiring between these pin of connector D11131 and connector D11125 for the CVR AUTO/ON switch:

D11131		D11125
pin X1	- - - - - - - - - - - - - - - - -	pin 4

2) Re-connect connector D11125 to the CVR AUTO/ON switch, P5-88.

3) Do the Repair Confirmation at the end of this task.

BOEING PROPRIETARY - Copyright © Unpublished Work - See title page for details

(d) If there is 28 VDC at pin X1 of D11131, then continue.

(4) Do this check of the wiring between the CVR switch latching relay, R780 and the engine 2 running relay, R738:

(a) Make sure that pin X2 of D11131 goes to ground.

(b) If pin X2 of D11131 does not go to ground, then do these steps:

1) Replace the engine 2 running relay, R738.

2) Re-install the CVR latching relay, R780.

3) Do the Repair Confirmation at the end of this task.

4) If the Repair Confirmation is not satisfactory, then do these steps:

a) Remove the engine 2 running relay, R738.

b) Remove the CVR switch latching relay, R780.

c) Do a wiring check between these pins of connector D12540 for relay R738 and connector D11131 for relay R780:

D12540		**D11131**
pin C3	- - - - - - - - - - - - - - - -	pin X2

d) Repair the problem in the wiring.

e) Re-install the engine 2 running relay, R738.

f) Re-install the CVR switch latching relay, R780.

g) Do the Repair Confirmation at the end of this task.

(c) If pin X2 of D11131 goes to ground, then continue.

(5) Do this check of the wiring between the CVR switch latching relay, R780 and the engine 1 running relay, R737:

(a) Make sure that pin A2 of D11131 goes to ground.

(b) If pin A2 of D11131 does not go to ground, then do these steps:

1) Replace the engine 1 running relay, R737.

2) Re-install the CVR latching relay, R780.

3) Do the Repair Confirmation at the end of this task.

4) If the Repair Confirmation is not satisfactory, then do these steps:

a) Remove the engine 1 running relay, R737

b) Remove the CVR switch latching relay, R780.

c) Do a wiring check between these pins of connector D12538 for relay R737 and connector D11131 for relay R780:

D12538		**D11131**
pin C3	- - - - - - - - - - - - - - - -	pin A2

d) Repair the problem in the wiring.

e) Re-install the engine 1 running relay, R737.

f) Re-install the CVR switch latching relay, R780.

g) Do the Repair Confirmation at the end of this task.

5) If pin A2 of D11131 goes to ground, then continue.

(6) Do this check of the CVR switch latching relay, R780:

BOEING PROPRIETARY - Copyright © Unpublished Work - See title page for details

(a) Do a check for 28 VDC between pin A1 of D11131 and structure ground.

(b) If there is not 28 VDC at pin A1 of D11131, then do these steps:

1) Disconnect connector D11125 from the CVR AUTO/ON switch, P5-88.

2) Do a check of the wiring between these pins of connector D11125 and connector D11131:

D11125		D11131
pin 5	- - - - - - - - - - - - - - - - - -	pin A1

3) Repair the wiring.

4) Re-install the CVR switch latching relay, R780.

5) Re-connect connector D11125 to the CVR AUTO/ON switch, P5-88.

6) Do the Repair Confirmation at the end of this task.

(c) If there is 28 VDC at pin A1 of D11131 then do these steps:

1) Install a new CVR switch latching relay, R780.

2) Do the Repair Confirmation at the end of this task.

L. Repair Confirmation

(1) Do this check of the CVR operation:

(a) Connect the interphone, COM-1614 to the HEADPHONE/HEADSET jack on the voice recorder control panel.

(b) Set the left engine start lever to the IDLE position.

1) Make sure that the right engine start lever is in the OFF position.

2) Wait approximately 5 minutes.

NOTE: The CDS will energize the engine running relay 5 minutes after you put the start lever in the IDLE position.

(c) Push and hold the TEST switch on the CVR control panel (P5 panel) for 5 seconds.

NOTE: The test continues as long as the TEST switch is pushed.

1) Make sure that the light comes on once on the CVR control panel.

(d) Set the left engine start lever to the OFF position.

1) Wait approximately 5 minutes.

NOTE: The voice recorder will continue to operate for 5 minutes after both engines have stopped running, or engine running simulation has been discontinued.

(e) Set the right engine start lever to the IDLE position.

1) Wait approximately 5 minutes.

NOTE: The CDS will energize the engine running relay 5 minutes after you put the start lever in the IDLE position.

(f) Push and hold the TEST switch on the CVR control panel (P5 panel) for 5 seconds.

NOTE: The test continues as long as the TEST switch is pushed.

1) Make sure that the light comes on once on the CVR control panel.

(g) Make sure that the left and right engine start levers are each set to the off position.

1) Wait approximately 5 minutes.

BOEING PROPRIETARY - Copyright © Unpublished Work - See title page for details

(h) Set the CVR AUTO/ON switch (P5 overhead panel) to the ON position.

NOTE: Both engines must be off for at least 5 minutes.

1) Make sure that the CVR AUTO/ON switch stays in the ON position.

(i) Push and hold the TEST switch on the CVR control panel (P5 panel) for 5 seconds.

NOTE: The test continues as long as the TEST switch is pushed.

1) Make sure that the light comes on once on the CVR control panel.

(j) If the CVR operates correctly, then you corrected the fault.

END OF TASK

BOEING PROPRIETARY - Copyright © Unpublished Work - See title page for details

HAP **HAP 037-054, 101-999**

HAP **807. No Surveillance Video For One Camera - Fault Isolation**

HAP A. Description

HAP (1) Use this task when there is no surveillance video for one of the three cameras.

HAP B. Possible Causes

HAP (1) Video camera:
HAP • Camera 1, M3002, or
HAP • Camera 2, M3003, or
HAP • Camera 3, M3004.

HAP (2) Camera Control Unit:
HAP • Camera Control Unit 1, M3005
HAP • Camera Control Unit 2, M3007
HAP • Camera Control Unit 3, M3009

HAP (3) Video switch, M3001.

HAP (4) Wiring

HAP C. Circuit Breakers

HAP (1) This is the primary circuit breaker related to the fault:

HAP F/O Electrical System Panel, P6-12

Row	Col	Number	Name
B	1	C01641	SURVEILLANCE CAMERA

HAP D. Related Data

HAP (1) WDM 23-70-11.

HAP E. Initial Evaluation

HAP (1) Do the FDEVSS system check, Flight Deck Entry Video Surveillance System - System Test, AMM TASK 23-75-00-730-804

HAP (a) If the video is operational from some of the cameras, but not all, then do the fault isolation procedure that follows.

HAP F. Fault Isolation Procedure

HAP (1) Examine the camera lens.

HAP (a) Make sure the lens is not covered, or blocked by debris.

HAP (2) Replace the camera at the applicable position, M3002 for camera 1 (left), M3003 for camera 2 (center), or M3004 for camera 3 (right). These are the tasks:

HAP Video Camera - Removal, AMM TASK 23-75-02-000-804, and

HAP Video Camera - Installation, AMM TASK 23-75-02-400-804.

HAP (a) If surveillance video shows for the applicable camera, then you corrected the fault.

HAP (b) If you replaced the camera but the fault continues, then continue.

HAP (3) Make sure there is power from the video switch, M3001, to the applicable camera control unit (CCU).

BOEING PROPRIETARY - Copyright © Unpublished Work - See title page for details

HAP (a) Open this circuit breaker and install safety tag:

HAP F/O Electrical System Panel, P6-12

Row	Col	Number	Name
B	1	C01641	SURVEILLANCE CAMERA

HAP (b) On the CCU, disconnect the PL1 connector.

HAP (c) Remove the safety tag and close this circuit breaker:

HAP F/O Electrical System Panel, P6-12

Row	Col	Number	Name
B	1	C01641	SURVEILLANCE CAMERA

HAP (d) On the applicable CCU connector, D12491, D12493, or D12495, do a voltage check for 24V dc (volts direct current) between pin 1, camera power, and pin 3, chassis ground (WDM 23-70-11).

HAP 1) If voltage is present, then continue at the next step, replace the CCU.

HAP 2) If voltage is not present, then continue at the pin check between the CCU and VS, that follows.

HAP (4) Replace the applicable CCU. These are the tasks:

HAP Camera Control Unit - Removal, AMM TASK 23-75-11-000-801, and

HAP Camera Control Unit - Installation, AMM TASK 23-75-11-400-801.

HAP (a) If surveillance video shows for the applicable camera, then you corrected the fault.

HAP (b) If you replaced the camera and CCU but the fault continues, then continue.

HAP (5) Do a continuity check between the video switch and applicable CCU.

HAP (a) Open this circuit breaker and install safety tag:

HAP F/O Electrical System Panel, P6-12

Row	Col	Number	Name
B	1	C01641	SURVEILLANCE CAMERA

HAP (b) On the CCU, disconnect the PL1 connector.

HAP (c) On the VS, disconnect the D12489A connector.

HAP (d) Do the applicable wiring check as follows:

HAP **STA 340, BL0, WL 295**

VIDEO SWITCH, M3001		**CCU 1, M3005**	
D12489		**D12491**	
D3	- -	1	0
D4	- -	2	0
A1	- -	4	0
C1	- -	5	0

BOEING PROPRIETARY - Copyright © Unpublished Work - See title page for details

HAP **STA 340, BL0, WL 295**

VIDEO SWITCH, M3001	**CCU 2, M3007**	
D12489	**D12493**	
D5 -	1	0
D6 -	2	0
A2 -	4	0
C2 -	5	0

HAP **STA 340, BL0, WL 295**

VIDEO SWITCH, M3001	**CCU 3, M3009**	
D12489	**D12495**	
D1 -	1	0
D2 -	2	0
A3 -	4	0
C3 -	5	0

HAP (e) If you find a problem, repair the wiring.

HAP (f) Reconnect the connectors.

HAP (g) Do the repair confirmation step that follows.

HAP 1) If video shows on the MFD for the applicable camera, then you corrected the fault.

HAP 2) If the problem remains, then continue.

HAP (6) Replace the video switch, M3001. These are the tasks:

HAP Video Switch - Removal, AMM TASK 23-75-07-000-801, and

HAP Video Switch - Installation, AMM TASK 23-75-07-400-801.

HAP (a) If surveillance video shows for the applicable camera, then you corrected the fault.

HAP (b) If you replaced the camera, CCU, and VS, but the fault continues, do the wiring check again.

HAP G. Repair Confirmation

HAP (1) Do this task: Flight Deck Entry Video Surveillance System - System Test, AMM
HAP TASK 23-75-00-730-804.

HAP (a) If the video shows correctly on the common display system (CDS) from all three cameras,
HAP then you corrected the fault.

END OF TASK

HAP **808. Distorted Surveillance Video for One Camera - Fault Isolation**

HAP A. Description

HAP (1) Use this task when the video for one surveillance camera shows but is distorted. For example:

HAP • The surveillance video shows, but the display is dark

HAP • Lines show on the video display

HAP • Surveillance video is jittery or jumpy or the picture appears to roll

HAP • Any other surveillance video display that is not normal.

BOEING PROPRIETARY - Copyright © Unpublished Work - See title page for details

HAP B. Possible Causes

HAP (1) Video camera:
HAP ● Camera 1, M3002, or
HAP ● Camera 2, M3003, or
HAP ● Camera 3, M3004.

HAP (2) Camera Control Unit
HAP ● Camera Control Unit 1, M3005, or
HAP ● Camera Control Unit 2, M3007, or
HAP ● Camera Control Unit 3, M3009.

HAP (3) Video switch, M3001.

HAP (4) Wiring.

HAP C. Circuit Breakers

HAP (1) These are the primary circuit breakers related to the fault:

HAP F/O Electrical System Panel, P6-1

HAP

Row	Col	Number	Name
E	12	C01373	DISPLAY CTR LWR

HAP F/O Electrical System Panel, P6-12

HAP

Row	Col	Number	Name
B	1	C01641	SURVEILLANCE CAMERA

HAP D. Related Data

HAP (1) WDM 23-70-11.

HAP (2) WDM 31-62-42.

HAP E. Initial Evaluation

HAP (1) Do a test of the video surveillance system: Flight Deck Entry Video Surveillance System - System Test, AMM TASK 23-75-00-730-804.

HAP (a) If surveillance video from all three cameras shows normal on the lower center display, then the fault is intermittent.

HAP NOTE: Only the lower-center MFD can show flight deck entry video. The inboard left, and inboard right MFD units are connected to FDEVSS. However to show video successfully, the optional video-capable MFDs are required.

HAP (b) If surveillance video shows for all three cameras but on one camera the video is dark, the display is jumpy, lines appear or there are other display problems then do these steps:

HAP 1) Make a record of the camera Control Panel (CP) position (R-C-L) with the fault.

HAP NOTE: Only the lower-center MFD can show flight deck entry video. The inboard left, and inboard right MFD units are connected to FDEVSS. However to show video successfully, the optional video-capable MFDs are required.

HAP 2) Do the fault isolation procedure that follows.

HAP F. Fault Isolation Procedure

HAP (1) Examine the camera and lens.

BOEING PROPRIETARY - Copyright © Unpublished Work - See title page for details

HAP (a) Make sure that the lens is not covered, and the view is not blocked.

HAP (2) Replace the applicable video camera: camera 1, M3002, or camera 2, M3003, or camera 3, M3004. These are the tasks:

HAP Video Camera - Removal, AMM TASK 23-75-02-000-804, and

HAP Video Camera - Installation, AMM TASK 23-75-02-400-804

HAP (a) If surveillance video shows and is not distorted for the applicable camera, then you corrected the fault.

HAP (b) If you replaced the camera but the fault continues, then continue.

HAP (3) Replace the applicable camera control unit: CCU 1, M3005, or CCU 2, M3007, or CCU 3, M3009. These are the tasks:

HAP Camera Control Unit - Removal, AMM TASK 23-75-11-000-801, and

HAP Camera Control Unit - Installation, AMM TASK 23-75-11-400-801.

HAP (a) If surveillance video shows and is not distorted for the applicable camera, then you corrected the fault.

HAP (b) If you replaced the CCU but the fault continues, then continue.

HAP (4) Examine the wiring as follows:

HAP (a) Open this circuit breaker and install safety tag:

HAP F/O Electrical System Panel, P6-12

HAP

Row	Col	Number	Name
B	1	C01641	SURVEILLANCE CAMERA

HAP (b) At the video switch, M3001, disconnect connector D12489.

HAP (c) At the applicable CCU, (M3005, M3007, or M3009), disconnect the PL1 connector.

HAP (d) Do a check for continuity between these pins on VS connector DA12489, and these pins on the applicable CCU connector:

HAP **STA 344 WL250 BL0**

HAP

VS (M3001)		**CCU 1 (M3005)**	
DA1248912		**D12491**	
A1	- -	D	0
C1	- -	E	0

HAP **STA 344 WL250 BL0**

HAP

VS (M3001)		**CCU 3 (M3009)**	
DA1248912		**D12495**	
A3	- -	D	0
C3	- -	E	0

HAP **STA 344 WL250 BL0**

HAP

VS (M3001)		**CCU 2 (M3007)**	
DA1248912		**D12493**	
A2	- -	D	0
C2	- -	E	0

HAP (e) If you find a problem with the wiring, then do these steps:

BOEING PROPRIETARY - Copyright © Unpublished Work - See title page for details

HAP 1) Repair the wiring.
HAP 2) Reconnect the applicable CCU connector and the VS connector.
HAP 3) Do the repair confirmation that follows.
HAP a) If surveillance video shows for the applicable camera, then you corrected the fault.
HAP b) If the fault remains, then continue.

HAP (5) Replace the video switch, M3001. These are the tasks:
HAP Video Switch - Removal, AMM TASK 23-75-07-000-801
HAP Video Switch - Installation, AMM TASK 23-75-07-400-801
HAP (a) If surveillance video shows for the applicable camera, then you corrected the fault.
HAP (b) If you replaced the camera, CCU, and VS, but the fault continues, do the wiring check again.

HAP G. Repair Confirmation

HAP (1) Do this task: Flight Deck Entry Video Surveillance System - System Test, AMM
HAP TASK 23-75-00-730-804.

HAP (a) If the video shows correctly on the common display system (CDS) from all three cameras,
HAP then you corrected the fault.

END OF TASK

HAP **809. Surveillance Video Problems for All Cameras - Fault Isolation**

HAP A. Description
HAP (1) Use this task when no video shows for all three video surveillance cameras.
HAP (2) Use this task when the lower center multi-function display shows CAMERA FAIL.

HAP B. Possible Causes
HAP (1) Video Switch (VS), M03001.
HAP (2) Wiring.
HAP (3) Impedance transformer:
HAP ● T03022 (for lower center DU, N00190, WDM 23-70-11).

HAP C. Circuit Breakers
HAP (1) These are the primary circuit breakers related to the fault:

HAP F/O Electrical System Panel, P6-1

Row	Col	Number	Name
E	12	C01373	DISPLAY CTR LWR

HAP F/O Electrical System Panel, P6-11

Row	Col	Number	Name
A	8	C01627	CABIN UTIL RLY PWR

HAP F/O Electrical System Panel, P6-12

Row	Col	Number	Name
B	1	C01641	SURVEILLANCE CAMERA

BOEING PROPRIETARY - Copyright © Unpublished Work - See title page for details

HAP D. Related Data

HAP (1) WDM 23-70-11.

HAP (2) WDM 31-62-42.

HAP E. Initial Evaluation

HAP (1) Do a test of the video surveillance system: Flight Deck Entry Video Surveillance System - System Test, AMM TASK 23-75-00-730-804.

HAP (a) If surveillance video from all three cameras shows correctly on the lower center MFD, then there was an intermittent fault.

HAP (b) If the MFD does not show surveillance video for all three cameras, then do the fault isolation procedure that follows.

HAP (c) If the MFD shows the message CAMERA FAIL, then do the fault isolation procedure that follows.

HAP F. Fault Isolation Procedure

HAP (1) On the electric meters, battery and galley power module, P5-13, make sure that the IFE/PASS SEAT switch is set to ON.

HAP (2) Make sure the video switch (VS) has power as follows:

HAP (a) Open this circuit breaker and install safety tag:

HAP F/O Electrical System Panel, P6-12

HAP

Row	Col	Number	Name
B	1	C01641	SURVEILLANCE CAMERA

HAP (b) On the VS, M03001, disconnect connector D12489A.

HAP (c) Close this circuit breaker:

HAP F/O Electrical System Panel, P6-12

HAP

Row	Col	Number	Name
B	1	C01641	SURVEILLANCE CAMERA

HAP (d) Look for 115V ac (volts alternating current) on connector D12489A between pins A10 and B10

HAP (WDM 23-70-11).

HAP (e) If you do not find 115V ac at the VS connector, then do the steps that follow:

HAP 1) Examine and repair the wiring between the VS, M3001, and circuit breaker C01641 (WDM 23-70-11).

HAP 2) Reconnect connector D12489A to the VS.

HAP 3) If surveillance video shows for all three cameras, you corrected the fault.

HAP (f) If you find 115V ac at the VS connector, then continue.

HAP (3) Replace the VS. These are the tasks:

HAP Video Switch - Removal, AMM TASK 23-75-07-000-801, and

HAP Video Switch - Installation, AMM TASK 23-75-07-400-801.

HAP (4) Do the system check, Flight Deck Entry Video Surveillance System - System Test, AMM TASK 23-75-00-730-804.

BOEING PROPRIETARY - Copyright © Unpublished Work - See title page for details

(a) If surveillance video from all three cameras shows correctly on the lower-center MFD, then you corrected the fault.

(b) If the lower-center MFD does not show surveillance video for each of the three cameras, then continue.

(5) Replace the impedance transformer for the lower center MFD, T3022.
(WDM 23-70-11).

(a) If surveillance video shows correctly, and is not distorted for the applicable camera, then you corrected the fault.

(b) If you replaced the impedance transformer but the fault continues, then continue.

(6) Do a continuity check of the camera control panel circuitry at the VS connector:

(a) Disconnect connector DA12489A from the video switch (VS), M3001,
(WDM 23-70-11).

(b) Do a check to make sure that each position of the 3-position rotary switch, on the camera control panel, has continuity to the VS.

NOTE: You must set the rotary switch to the position specified to complete each of the three circuits.

STA 344 WL 290 BL0

	VS Connector, DA12489	**VS Connector, DA12489**	
Camera CP-Position L	**DA12489**	**DA12489**	
	B6 -	A6	0
Camera CP-Position C	**DA12489**	**DA12489**	
	B6 -	A7	0
Camera CP-Position R	**DA12489**	**DA12489**	
	B6 -	A8	0

(c) Do a continuity check of the DSPL (display) push-button on the camera CP from the VS connector:

NOTE: To complete the circuit, you must push DSPL on the camera control panel. The position of the rotary switch does not affect this check.

STA 344 WL250 BL0

		Camera CP DSPL DA12489A	
VS connector	**VS, M3001 DA12489A**		
	A5 -	N5	0 (when DSPL is pressed)

(7) If you find a problem, replace the camera control panel. These are the tasks:
Control Panel - Removal, AMM TASK 23-75-03-000-803, and
Camera Control Panel - Installation, AMM TASK 23-75-03-400-803.

BOEING PROPRIETARY - Copyright © Unpublished Work - See title page for details

HAP (8) Do the wiring check again.
HAP (a) If you find a problem, repair the wiring.
HAP (9) Reconnect connector DA12489A to the VS.
HAP (10) Do the repair confirmation that follows.
HAP G. Repair Confirmation
HAP (1) Do the system check, Flight Deck Entry Video Surveillance System - System Test, AMM
HAP TASK 23-75-00-730-804.
HAP (a) If surveillance video from all three cameras shows correctly on the lower center MFD, then
HAP you corrected the fault.

END OF TASK

HAP **HAP 001-013, 015-026, 028-030**

HAP **810. No Video at All Camera Positions - Fault Isolation**
HAP A. Description
HAP (1) Video from all cameras does not appear on LCD monitor.
HAP B. Possible Causes
HAP (1) Faulty wiring
HAP (2) FLIGHTVU SYSTEM circuit breaker
HAP (3) Video Switch Unit
HAP (4) Control Panel
HAP (5) LCD Monitor
HAP C. Initial Evaluation
HAP (1) Select all camera source positions on Control Panel. Make sure video is displayed.
HAP (a) If no video shows on one or two cameras, do this task: No Video at One or Two Camera
HAP Positions - Fault Isolation, 23-75 TASK 811.
HAP (b) If no video shows for all camera positions, then do the fault isolation procedure that follows.
HAP D. Fault Isolation Procedure
HAP (1) Check for 12V dc at LCD Monitor connector.
HAP (a) If no 12V dc is found at LCD Monitor, check for 28V dc at the Video Switch Unit connector.
HAP 1) If no 28V dc is found at Video Switch Unit connector, repair or replace defective wiring.
HAP If fault continues, replace FLIGHTVU SYSTEM circuit breaker.
HAP a) If video from all cameras shows on the monitor, then you corrected the fault.
HAP 2) If 28V dc is found at Video Switch Unit, replace the Video Switch Unit AMM
HAP TASK 23-75-04-000-801, AMM TASK 23-75-04-400-801. If fault continues, replace the
HAP Control Panel AMM TASK 23-75-06-000-801, AMM TASK 23-75-06-400-801. If fault
HAP continues, repair or replace defective wiring.
HAP a) If video from all cameras shows on the monitor, then you corrected the fault.
HAP (b) If 12V dc is found at LCD Monitor, check for video signal at LCD Monitor connector.

BOEING PROPRIETARY - Copyright © Unpublished Work - See title page for details

HAP 1) If there is no video signal at LCD Monitor, replace the Video Switch Unit AMM TASK 23-75-04-000-801, AMM TASK 23-75-04-400-801. If fault continues, repair or replace defective wiring.

HAP a) If video from all cameras shows on the monitor, then you corrected the fault.

HAP 2) If video signal is present at LCD Monitor, replace the LCD Monitor AMM TASK 23-75-05-000-801, AMM TASK 23-75-05-400-801.

HAP a) If video from all cameras shows on the monitor, then you corrected the fault.

——————— END OF TASK ———————

HAP **811. <u>No Video at One or Two Camera Positions - Fault Isolation</u>**

HAP A. Description

HAP (1) No video appears at one or two camera positions on the LCD monitor.

HAP B. Possible Causes

HAP (1) Defective wiring

HAP (2) FLIGHTVU SYSTEM circuit breaker

HAP (3) Video Switch Unit

HAP (4) Control Panel

HAP (5) Camera Control Unit

HAP (6) Camera cable

HAP (7) Camera

HAP C. Initial Evaluation

HAP (1) Select all camera positions to make sure video appears.

HAP (a) If no video shows for all camera positions, do this task: No Video at All Camera Positions - Fault Isolation, 23-75 TASK 810.

HAP (b) If no video shows for one or two cameras, then do the fault isolation procedure that follows.

HAP D. Fault Isolation Procedure

HAP (1) Check for 28 at Camera Control Unit (CCU) connector P1.

HAP (a) If no 28V dc is found at CCU Connector, check for 28V dc at Video Switch Unit connector.

HAP 1) If no 28V dc is found at Video Switch Unit then repair or replace defective wiring. If fault continues, replace FLIGHTVU SYSTEM circuit breaker.

HAP a) If video from one or two camera positions appears on LCD monitor, then you corrected the fault.

HAP 2) If 28V dc is found at Video Switch Unit connector, then replace Control Panel AMM TASK 23-75-06-000-801, AMM TASK 23-75-06-400-801. If fault continues, replace Video Switch Unit AMM TASK 23-75-04-000-801, AMM TASK 23-75-04-400-801.

HAP a) If video from one or two camera positions appears on LCD monitor, then you corrected the fault.

HAP (b) If 28V dc is found at CCU connector P1, check for 9V dc power at CCU connector J2.

HAP 1) If no 9V dc at CCU connector J2, replace Camera Control Unit AMM TASK 23-75-08-000-801, AMM TASK 23-75-08-400-801.

BOEING PROPRIETARY - Copyright © Unpublished Work - See title page for details

HAP a) If video from one or two camera positions appears on LCD monitor, then you
HAP corrected the fault.

HAP 2) If 9V dc is found at CCU connector J2, check for 9 power at Camera connector P1.

HAP a) If no 9V dc is found at camera connector P1, replace Camera cable.

HAP <1> If video from one or two camera positions appears on LCD monitor, then you
HAP corrected the fault.

HAP b) If 9V dc is found at camera connector P1, replace camera AMM
HAP TASK 23-75-02-000-807, AMM TASK 23-75-02-000-808, AMM
HAP TASK 23-75-02-400-805, AMM TASK 23-75-02-400-806. If fault continues, replace
HAP Camera Control Unit AMM TASK 23-75-08-000-801, AMM TASK 23-75-08-400-801.

HAP <1> If video from one or two camera positions appears on LCD monitor, then you
HAP corrected the fault.

END OF TASK

HAP **812. No Video at One or More Camera Positions During Nighttime Conditions - Fault Isolation**

HAP A. Description

HAP (1) No video from one or more camera positions appears on LCD monitor during nighttime
HAP conditions.

HAP B. Possible Causes

HAP (1) Defective Wiring

HAP (2) FLIGHTVU SYSTEM circuit breaker

HAP (3) IR Illuminator

HAP (4) Video Switch Unit

HAP (5) Control Panel

HAP C. Initial Evaluation

HAP (1) During nighttime conditions, select all camera sources on LCD monitor.

HAP (a) If no video shows from one or more cameras, then do the fault isolation procedure that
HAP follows.

HAP D. Fault Isolation Procedure

HAP (1) Check for 28V dc at IR Illuminator connector.

HAP (a) If no 28V dc is found at Illuminator connector, check for 28V dc at Video Switch Unit
HAP connector.

HAP 1) If no 28V dc is found at Video Switch Unit, repair or replace defective wiring. If fault
HAP continues replace FLIGHTVU SYSTEM circuit breaker.

HAP a) If video from camera appears on LCD monitor, then you corrected the fault.

HAP 2) If 28V dc is found at Video Switch Unit connector, replace Video Switch Unit AMM
HAP TASK 23-75-04-000-801, AMM TASK 23-75-04-400-801. If fault continues replace
HAP control panel AMM TASK 23-75-06-000-801, AMM TASK 23-75-06-400-801.

HAP a) If video from camera appears on LCD monitor, then you corrected the fault.

HAP (b) If 28V dc is found at Illuminator, replace IR Illuminator AMM TASK 23-75-02-000-807, AMM
HAP TASK 23-75-02-000-808, AMM TASK 23-75-02-400-805, AMM TASK 23-75-02-400-806.

BOEING PROPRIETARY - Copyright © Unpublished Work - See title page for details

HAP 1) If video from camera appears on LCD monitor, then you corrected the fault.

END OF TASK

HAP

BOEING PROPRIETARY - Copyright © Unpublished Work - See title page for details

801. Flight Compartment Outlet Unit LED Problems - Fault Isolation

A. Description

(1) The Outlet Unit (OU) status LED is red in color or does not come on.

NOTE: Normal operation is when the OU status LED is green in color. This indicates power is available and the outlet is enabled. If the OU status LED is red in color, this indicates a fault with the OU or ISPS. If the OU status LED does not come on, this indicates that power is not available.

B. Possible Causes

(1) Outlet Unit

(2) In-Seat Power Supply

(3) Circuit Breaker

(4) Wiring or connector

C. Circuit Breakers

(1) This is the primary circuit breaker related to the fault:

F/O Electrical System Panel, P6-12

Row	Col	Number	Name
A	3	C01643	FD PC POWER

D. Initial Evaluation

(1) Make sure power is applied to the Flight Compartment PC power system.

(a) Test the system again by cycling the applicable circuit breaker.

(b) If the LED is green in color, there was an intermittent fault.

(c) If the LED is red in color, do the fault isolation task below for OU Status LED is Red in Color.

(d) If the LED is not on, do the fault isolation task below for OU Status LED is Not On.

E. OU Status LED is Red in Color-Fault Isolation Procedure

(1) If the OU status LED is red in color, do the steps that follow:

(a) Examine all OU status LEDs in the flight compartment.

NOTE: There are two OU's installed in the flight compartment. The OU's are at P6 and P18 panels.

(b) If only one OU status LED in the flight compartment is red in color, then do the steps that follow:

1) Replace the applicable OU. These are the tasks:

Outlet Unit Removal, AMM TASK 23-82-01-000-801,

Outlet Unit Installation, AMM TASK 23-82-01-400-801.

2) If the OU status LED changes to green in color, then you corrected the fault.

3) If the problem continues, examine the wiring between the ISPS and the OU.

a) If you find a problem, repair or replace the applicable wiring.

4) If the OU status LED changes to green in color, then you corrected the fault.

(c) If all the OU status LEDs in the flight compartment are red in color, then do the steps that follow:

BOEING PROPRIETARY - Copyright © Unpublished Work - See title page for details

1) Replace the ISPS. These are the tasks:
   In-Seat Power Supply Removal, AMM TASK 23-82-02-000-801,
   In-Seat Power Supply Installation, AMM TASK 23-82-02-400-801.
2) If the OU status LEDs change to green in color, then you corrected the fault.

F. OU Status LED is Not On - Fault Isolation Procedure

(1) If the OU status LED is not on, do the steps that follow:

(a) Examine all OU status LEDs in the flight compartment.

NOTE: There are two OU's installed in the flight compartment. The OU's are at P6 and P18 panels.

(b) If only one OU status LED in the flight compartment is not on, then do the steps that follow:

1) Replace the applicable OU. These are the tasks:
   Outlet Unit Removal, AMM TASK 23-82-01-000-801,
   Outlet Unit Installation, AMM TASK 23-82-01-400-801.
2) If the OU status LED changes to green in color, then you corrected the fault.
3) If the problem continues, examine the wiring between the ISPS and the OU.
   a) If you find a problem, repair or replace the applicable wiring.
4) If the OU status LED changes to green in color, then you corrected the fault.

(c) If all the OU status LEDs in the flight compartment are not on, then do the steps that follow:

1) Disconnect connector D14212 from connector J2 of the ISPS, M2566.
2) Check for 115 VAC at pin 1 of connector D14212.
3) If pin 1 of connector D14212 reads 115 VAC, replace the ISPS. These are the tasks:
   In-Seat Power Supply Removal, AMM TASK 23-82-02-000-801,
   In-Seat Power Supply Installation, AMM TASK 23-82-02-400-801.
4) If the OU status LEDs change to green in color, then you corrected the fault.
5) If pin 1 of connector D14212 does not read 115 VAC, replace the circuit breaker.
6) If the OU status LEDs change to green in color, then you corrected the fault.
7) If the problem continues, check and repair the wiring as necessary.
8) If the OU status LED changes to green in color, then you corrected the fault.

END OF TASK

BOEING PROPRIETARY - Copyright © Unpublished Work - See title page for details