TO: ALL HOLDERS OF ANTENNA DISCONNECT ASSEMBLY OVERHAUL MANUAL, 23-13-01

REVISION NO. 2, DATED SEP 5/93

HIGHLIGHTS

DESCRIPTION OF CHANGE	TOPICS AFFECTED												
	D&O	D/Assy	Cleaning	Insp/Chk	Repair	Assy	F/C	Test	T/Shooting	S/Tools	Storage	IPL	L/Overhaul
Added preferred parts to the illustrated parts list												X	

ANTENNA DISCONNECT ASSEMBLY

23-13-01

BOEING P/N 65-34679-4, -10

AIRLINE P/N

THE FOLLOWING DIRECTIVES APPLY TO THIS SUBJECT:

BOEING SERVICE BULLETIN	BOEING TEMPORARY REVISION	OTHER DIRECTIVES	DATE DIRECTIVE INCORPORATED INTO TEXT

LIST OF EFFECTIVE PAGES

* Indicates pages revised, added or deleted in latest revision
F Indicates foldout pages - print one side only

	PAGE	DATE	PAGE	DATE	PAGE	DATE
23-13-01						
	T-1	Jan 5/78				
	T-2	BLANK				
*	LEP-1	Sep 5/93				
	LEP-2	BLANK				
	T/C-1	Jun 10/72				
	T/C-2	BLANK				
	1	Jan 5/78				
	2	Jan 5/78				
	3	Jan 5/78				
	4	Jan 5/78				
	5	Jan 5/78				
	6	Jan 5/78				
	7	Jun 10/72				
*	8	Sep 5/93				
*	9	Sep 5/93				
*	10	Sep 5/93				

TABLE OF CONTENTS

Paragraph Title	Page
Description and Operation	1
Disassembly	2
Cleaning	3
Inspection/Check	3
Repair	5
Assembly	3
Fits and Clearances	None
Testing	None
Trouble Shooting	None
Storage Instructions	None
Special Tools, Fixtures, and Equipment	None
Illustrated Parts List	7

ANTENNA DISCONNECT ASSEMBLY

1. DESCRIPTION AND OPERATION

A. Description

(1) The antenna disconnect assembly consists of a barrel assembly housing a spring, plunger, and inner barrel; and a chuck jaw assembly used to connect the antenna wire to the end of the inner barrel. A swivel ball and fitting is used to connect the assembly to the airplane.

NOTE: Special instructions for fits and clearances, testing, trouble shooting, storage, and special tools are not required. Standard shop practices are sufficient for overhaul of this component.

B. Operation

(1) The antenna disconnect assembly is used to connect the aft end of the HF antenna to the airplane. A swivel ball and socket permits antenna movement at the aft end. Approximately 70 pounds spring tension is applied to the antenna by the assembly.

(2) The aft end of the antenna is rigidly clamped in chuck jaws. Bridge clamps hold the chuck jaw assembly to the sliding inner barrel of the disconnect assembly. When the forward end of the antenna is disconnected, the inner barrel will slide to the rear such that a plunger forces the bridge clamps apart to release the chuck jaw assembly and antenna from the unit.

C. Leading Particulars

Length -- Mounted (under spring tension), approximately 38 inches. Not under spring tension, approximately 30 inches.
Diameter -- 2 inches (approx)
Weight -- 4 pounds (approx)
Antenna tension applied -- 70 pounds (approx)

2. DISASSEMBLY

A. (65-34679-10 only) Remove nuts (145, 155), washers (140, 150), screw (135), bonding jumper terminal (160), and clamp (130)

B. Remove and disassemble aft chuck jaw assembly (5) as follows:

(1) If chuck jaw assembly is to be removed, but not disassembled, do not disturb bonding by peeling back rubber sleeve. Push chuck jaw assembly against outer barrel (80) such that plunger (90) forces bridge clamps (20) apart to release flange of inner barrel (75).

(2) If chuck jaw assembly is to be disassembled, peel back rubber sleeve (10) from chuck body (25) to expose bridge clamps (20).

(3) Disconnect bridge clamps (20) from flange of inner barrel (75).

(4) Remove stop plug (15), and spring (40).

(5) If antenna wire is attached, remove from chuck jaws by pushing jaws (30) back.

(6) Remove chuck jaws (30), or, if AMC4 chuck jaws are used, remove washer (35) and chuck jaws (30).

(7) Press out hinge pins (45) and remove bridge clamps (20).

(8) Unscrew support sleeve (50) from chuck body (25).

C. Loosen outer barrel nut (65), and unscrew swivel socket (70) from outer barrel (80).

D. Remove cotter pin (120), nut (115), and fitting (110). Ball swivel (105) will now fall free of swivel socket (70).

E. Remove plunger assembly (85) from outer barrel.

F. Slide inner barrel (75) into outer barrel (80) until inner barrel nuts (60) are exposed. Secure inner barrel at flange end (do not mar surface), and remove inner barrel nuts (60) one at a time.

G. (65-34679-10 only) Remove nuts (185, 195), washers (180, 190), screw (175), and bonding jumper terminal (170).

H. Slide inner barrel (75) free of outer barrel (80). Spring (55) will now fall free of outer barrel.

I. Disassemble plunger assembly (85) as follows:

(1) Secure plunger (90) without marring surface and remove nut (100) and disk (95).

3. CLEANING

A. Wash all metal parts with solvent, Specification P-D-680, or equivalent.

B. Use stiff-bristle brush to remove stubborn accumulations of foreign matter.

C. Dry all parts with lint-free cloth or clean, dry, compressed air.

D. For further information, refer to 20-30-03, General Cleaning Procedures.

4. INSPECTION/CHECK

A. Visual Checks (See figure 1101.)

(1) Examine all metal parts for cracks, burrs, and corrosion, using strong light and minimum 10-power magnification.

(2) Examine all threads for cross threading and stripping.

(3) Check all painted and plated surfaces for blistering, flaking, and continuity of plating surface.

(4) Examine chuck jaws (30) for damage that would prevent proper grip.

B. Special Checks (See figure 1101.)

(1) Check spring (55) as follows:

(a) Check for approximate free length of 16.8 inches.

(b) Check that no permanent set results after compression to 6.8 inches (solid height).

(c) Check for a compression load of 72.3 to 87.7 pounds at 7.6 inches.

(d) Check that there is no wobble when rolled on a flat surface.

5. ASSEMBLY

A. (65-34679-10 only) See repair for electrical bonding instructions. Install screw (175), washer and nut (180, 185), bonding jumper terminal (170), washer (190), and nut (195) at end of barrel (80).

B. Assemble plunger assembly (85) as follows:

(1) Secure plunger (90), without marring surface, and install disk (95) followed by nut (100).

C. Slide inner barrel (75) into outer barrel (80) from end with small opening. Slide spring (55) into outer barrel.

D. Secure inner barrel at flange end (do not mar surface) and install first inner barrel nut (60). Install second inner barrel nut (60) as a locking nut. Ensure that all available thread is used. Use slots on inner barrel nuts for drive.

E. Slide plunger assembly (85) into inner barrel (75) until plunger assembly disk fits snugly at outer barrel end.

F. Install ball swivel (105) in swivel socket (70). Place fitting (110) over threaded end of ball swivel such that curved surfaces mate. Install nut (115) on ball swivel (105). Tighten until snug, then loosen just enough for free movement of ball swivel. Install cotter pin (120).

G. Install outer barrel nut (65), tapered side first, on outer barrel. Run nut to end of threads.

H. Install swivel socket (70) on outer barrel. Turn until barrel bottoms in swivel socket. When bottomed, only three threads should be visible between outer barrel nut and swivel socket.

I. Turn outer barrel nut (65) against swivel socket (70) to lock.

NOTE: Do not lock too tight. Swivel socket must be loosened again at installation on airplane.

J. Assemble aft chuck jaw assembly (5) as follows:

(1) With bridge clamps (20) placed in chuck body (25), insert hinge pins (45). Trim hinge pins to outer chuck body surface. Bridge must move free in chuck body slots.

(2) Insert chuck jaws (30), or, if AMC4 chuck jaws are used, insert chuck jaws followed by washer (35).

(3) Insert spring (40) and stop plug (15). Do not tighten stop plug more than required to hold chuck jaws in place.

(4) Slide rubber sleeve (10) over chuck body (25) and bond to chuck body per 20-50-12, Application of Adhesives, Type 40. Do not apply bonding to bridge clamps (20).

K. (65-34679-10 only) Install clamp (130), screw (135), washer and nut (140, 145), bonding jumper terminal (160), and washer and nut (150, 155). See repair for electrical bonding instructions.

L. Attachment of aft end of antenna wire: (attachment may be deferred until installation on airplane)

(1) Strip approximately 0.50 inch of insulation from aft end of antenna wire.

CAUTION: ANTENNA WIRE MUST NOT BE DAMAGED OR EVEN NICKED WHILE STRIPPING INSULATION.

(2) Slide antenna support sleeve (50), narrow end first, onto antenna wire.

(3) Slide end of antenna wire into chuck jaw assembly (5) until stripped portion can be engaged by chuck jaws (30). Loosen stop plug (15) as necessary. Peel back rubber sleeve (10) as required, taking care not to disturb bonding.

(4) Tighten stop plug (15), and replace rubber sleeve over bridge clamps.

(5) Pack MIL-G-7187 grease into cavity.

(6) Push chuck jaw assembly against inner barrel (75) flange until bridge clamps (20) are engaged.

(7) Coat threads of antenna support sleeve with silicone grease, Dow Corning DC-4 (MIL-1-8860), and screw into chuck body (25).

6. REPAIR

A. Repair

(1) Remove minor scratches, nicks, and corrosion by polishing lightly with 220 grit or finer abrasive cloth. Refinish as required for corrosion protection.

(2) Repair minor defects in threaded areas with thread chaser or small triangular file.

(3) When installing bonding jumper (65-34679-10 only), prepare and install per 20-11-03. When installed, verify that resistance between inner barrel and outer barrel, through jumper, does not exceed 0.10 ohms. Apply MIL-V-173A varnish over clamp on inner barrel, and over ground stud area on outer barrel.

B. Refinish (See figure 1101.)

NOTE: Refer to 20-30-02 for stripping of protective finishes and to 20-41-01 for decoding of F and SRF finish symbols and their BAC equivalents.

(1) Stop plug (15), bridge clamps (20), chuck body (25) -- Apply F-1.191.

(2) Outer barrel nut (65) -- Apply F-2.204 per BMS 10-6B, thickness .002 to .003 inch, except for threaded area. Follow F-2.204 with F-12.22 (EC-843) on exterior surface only.

(3) Swivel socket (70) -- Apply F-2.204 per BMS 10-6B, thickness .002 to .003 inch; followed by F-12.22 (EC-843) on exterior surface only. Do not apply F-2.204 to the flat end of the internal surface nor to the internal surface of the nipple beyond.

(4) Inner barrel (75) -- Apply F-2.204, thickness .002 to .003 inch, per BMS 10-6B, except for threads and for last .44 to .56 inch of external surface on flange end. Apply dry film lubricant, BMS 3-8 class A, per 20-50-08 on exterior surface except threads, after application of F-2.204.

(5) Outer barrel (80) -- Apply F-2.204 per BMS 10-6B, thickness .002 to .003 inch, except for threaded area and last .74 to .86 inch of interior surface at closed end. Special finish for electrical conductivity is required on external threads, and is to be applied only by Electro Film Corporation, North Hollywood, California, or Precision Engineering, 1st Ave., Seattle, Washington (Solid Film Lubricant Electrofilm #4253).

(6) Plunger (90) and disk (85) -- Apply F-2.204 per BMS 10-6B, thickness .002 to .003 inch, except for threaded areas. On plunger (90), after application of F-2.204, apply dry film lubricant BMS 3-8, class A per 20-50-08 except for threaded areas.

(7) Swivel ball (105) -- Cadmium plate per 20-42-05.

(8) Fitting (110) -- Chrome plate per 20-42-03.

C. Replacement

(1) Replace marker (125), if damaged, per 20-50-05.

(2) Replace cotter pin (120) at each overhaul.

(3) Replace all parts found unserviceable or damaged beyond simple repair.

D. Materials

(1) Silicone Grease - Dow Corning DC-4 (MIL-1-8860)

(2) Grease - MIL-G-7187

(3) Varnish - MIL-V-173A

7. ILLUSTRATED PARTS LIST

VENDORS

V91637 Dale Electronics Inc., P.O. Box 609, Columbus, Nebraska 68601

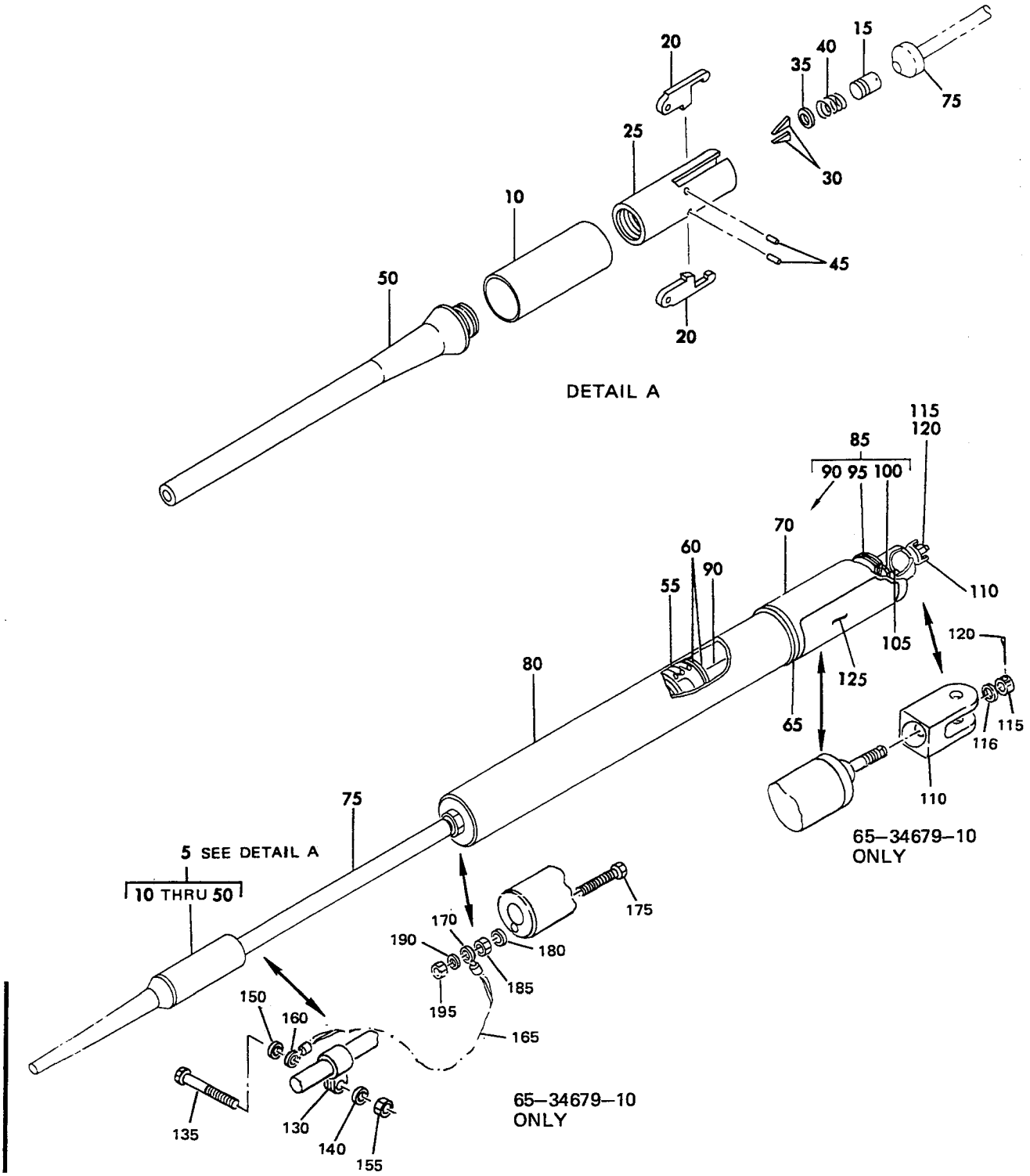

Antenna Disconnect Assembly
Figure 1

FIG. & ITEM NO.	PART NO.	AIRLINE PART NUMBER	NOMENCLATURE 1 2 3 4 5 6 7	USE CODE	QTY PER ASSY
1-					
	65-34679-4		ANTENNA DISCONNECT ASSY	A	
	65-34679-10		ANTENNA DISCONNECT ASSY	B	
5	65-34679-5		. CHUCK JAW ASSY, AFT		1
10	3-88561-1		. . RUBBER SLEEVE		1
15	3-88576-1		. . STOP PLUG		1
20	3-88577-1		. . BRIDGE CLAMP		2
25	3-88578-1		. . CHUCK BODY		1
30	430055-01		. . CHUCK JAW, V91637 (PREF) (SUPSDS AMC-145)		2
30	AMC145		. . CHUCK JAW, V91637 (SUPSD BY 430055-01)		2
30	AMC4		. . CHUCK JAW, V91637 *[1]		3
35	AN960PD3L		. . WASHER (USE WITH AMC4 ONLY)		1
40	430054-01		. . SPRING, V91637 (SUPSDS AMC3)		1
40	AMC3		. . SPRING, V91637 (SUPSD BY 430054-01)		1
45	AN253-5-100		. . HINGE PIN (SUPSD BY MS20253-5-100)		2
45	MS20253-5-100		. . HINGE PIN (SUPSDS AN253-5-100)		2
50	MS25056-1B		. . SUPPORT SLEEVE (PREF) (SUPSDS P21)		1
50	P21		. . SUPPORT SLEEVE (SUPSD BY MS25056-1B)		1
50	MS25056-1A		. . SUPPORT SLEEVE (OPT)		1
55	30-3500		. SPRING		1
60	30-3589-2		. NUT, INNER BARREL		2
65	30-3590-1		. NUT, OUTER BARREL		1
70	60-5787-2		. SOCKET, SWIVEL		1
75	60-5788-2		. BARREL, INNER		1
80	60-5789-3		. BARREL, OUTER		1
85	60-5790-3		. PLUNGER ASSY, SAFETY DISCONNECT		1
90	60-5790-4		. . PLUNGER		1
95	60-5790-5		. . DISK		1
100	MS25082-3		. . NUT		1
105	63-10419		. SWIVEL, BALL		1
110	63-10420		. FITTING	A	1
110	69-46249-2		. YOKE	B	1
115	AN320-4		. NUT	A	1
115	BACN10JD104		. NUT	B	1
116	AN960XC16L		. WASHER	B	1
120	MS24665-132		. COTTER PIN	A	1
120	MS24665-134		. COTTER PIN	B	1
125	BACM9W41-2A		. MARKER	B	1

FIG. & ITEM NO.	PART NO.	AIRLINE PART NUMBER	NOMENCLATURE 1 2 3 4 5 6 7	USE CODE	QTY PER ASSY
1-					
130	AN735D8		. CLAMP	B	1
135	BACS12CB3-10		DELETED		
135	NAS1801-3-7		. SCREW	B	1
140	AN960D10		. WASHER	B	1
145	MS25082-3		DELETED		
150	MS35338-43		. WASHER	B	1
155	MS21042L3		. NUT-SELF LOCKING	B	1
155	BACN10JC3		. NUT (OPT)	B	1
160	BACT12AC12		. TERMINAL	B	1
165	65-34679-11		. WIRE, 12 INCHES, BMS13-31, TYPE 1, CLASS 1, SIZE AWG 12	B	1
170	BACT12HC56		. TERMINAL	B	1
175	BACS12CB08-10		. SCREW	B	1
180	AN960D8		. WASHER	B	1
185	MS35649-286T		. NUT	B	1
190	AN 9608L		. WASHER	B	1
195	BACN10JC08		. NUT		

*[1] THREE AMC-4 CHUCK JAWS USED WITH ONE AN96PD3L WASHER OPTIONAL TO USE OF TWO 430055-01 CHUCK JAWS.