TO: ALL HOLDERS OF PALLETIZED CARGO SYSTEM AFT STOP ASSEMBLY OVERHAUL MANUAL, 25-57-04

REVISION NO. 2, DATED JUN 5/86

HIGHLIGHTS

DESCRIPTION OF CHANGE	TOPICS AFFECTED												
	D&O	D/Assy	Cleaning	Insp/Chk	Repair	Assy	F/C	Test	T/Shooting	S/Tools	Storage	IPL	L/Overhaul
Added optional shackle to parts list												X	
Updated vendor codes												X	

PALLETIZED CARGO SYSTEM AFT STOP ASSEMBLY

25-57-04

BOEING P/N 69-35293-1, -2, -3

AIRLINE P/N

THE FOLLOWING DIRECTIVES APPLY TO THIS SUBJECT:

BOEING SERVICE BULLETIN	BOEING TEMPORARY REVISION	OTHER DIRECTIVES	DATE DIRECTIVE INCORPORATED INTO TEXT

LIST OF EFFECTIVE PAGES

* Indicates pages revised, added or deleted in latest revision

F Indicates foldout pages - print one side only

	PAGE	DATE	PAGE	DATE	PAGE	DATE
	25-57-04					
	T-1	Jun 10/70				
	T-2	BLANK				
*	LEP-1	Jun 5/86				
	LEP-2	BLANK				
	T/C-1	Jun 10/70				
	T/C-2	BLANK				
	1	Jun 10/70				
	2	Jun 10/70				
	3	Jun 10/70				
	4	Mar 5/84				
	5	Dec 25/75				
	6	Jun 10/70				
	7	Jun 10/70				
	8	Jun 10/70				
*	9	Jun 5/86				
*	10	Jun 5/86				

TABLE OF CONTENTS

PALLETIZED CARGO SYSTEM AFT STOP ASSEMBLY

Boeing Part Numbers: 69-35293-1, -2 and -3

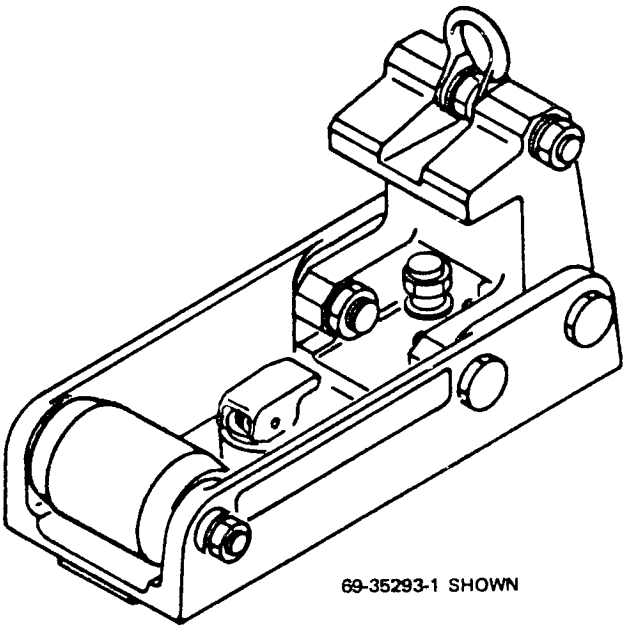

Palletized Cargo System Aft Stop Assembly
Figure 1

1. DESCRIPTION AND OPERATION

A. Description

(1) The palletized cargo system aft stop assembly consists mainly of an aluminum forging with forward and aft seat track attachment studs. A cargo tiedown shackle is connected at the top of the forging. Some configurations also include a roller assembly.

B. Operation

(1) The aft stop assemblies are attached to the seat tracks at the extreme aft end of the series of roller trays. The aft stop prevents the cargo pallets from moving aft or upward.

C. Leading Particulars

Length -- Approximately 8.25 inches
Width -- Approximately 4.25 inches
Height -- Approximately 6.50 inches
Weight -- 3.0 pounds

2. DISASSEMBLY (See figure 3.)

A. Remove nut (1), washer (2), bolt (3) and shackle (4).

B. To remove stop (8) from aft stop support (30), remove nuts (5), washers (6) and bolts (7).

C. Remove spring pin (9) and parts (10 through 12).

D. On assembly 69-35293-1, remove nut (13), washer (14), bolt (15), spacer (16) and roller assembly (17).

NOTE: Do not remove bearings (18) from roller (19) unless bearings are damaged and need to be replaced.

E. Remove nut (20), washer (21) and stud (22) from aft stop support (30).

F. Apply upward pressure to shear stud (28) while removing spring pin or tubular rivet (23), lever (24), torsion spring (25) and washer (26). Remove compression spring (27) and shear stud (28).

NOTE: Working force of compression spring (27) is approximately 7 pounds.

Do not remove Metal-Cal (29) from aft stop support (30) unless replacement is necessary.

3. CLEANING

A. General

(1) Wash all metal parts, except bearings, with dry cleaning solvent, Specification P-D-680 or equivalent. Use a stiff-bristle brush to remove stubborn accumulations of foreign matter.

(2) Drain all metal parts and dry thoroughly with a clean, lint-free cloth or with clean, moisture-free air.

(3) For further information, refer to Subject 20-30-03, "General Cleaning Procedures."

B. Bearings

(1) Clean bearings (18) per Subject 20-30-01, "Cleaning and Relubrication Antifriction Bearings."

4. INSPECTION/CHECK (See figure 3.)

A. Visual Checks

(1) Examine all metal parts for pits, scratches, cracks, corrosion, and damage, using a strong light and a minimum of 10-power magnification.

(2) Check all threaded parts for cross-threading and stripping.

(3) Examine painted and plated surfaces for blisters, chipping or flaking.

(4) Examine bearings (18) for roughness, binding or excessive radial or axial play.

(5) Check spring (27) for roundness by rolling on a flat surface; there must be no wobble. Check spring (27) for free length of approximately 0.81 inch. Compress spring to 0.40 inch; load required should be 6.64 to 8.11 pounds.

(6) Rotate spring (25) through an angle of 180 degrees; no permanent set should result. Measure load required to deflect spring 22 degrees; load should be 0.011 to 0.013 pound-inches. Measure load required to deflect spring 147 degrees; load should be 0.07 to 0.09 pound-inches.

(7) Check bolt holes on aft stop support (30) for elongation.

(8) Check Metal-Cal (29) for legibility and security of mounting.

B. Special Checks

(1) If visual examination discloses evidence of defects in any of the parts listed, perform the following checks:

(a) Dye penetrant check -- stop (8), roller (19), lever (24) and shear stud (28).

(b) Magnetic particle check -- shackle (4), studs (12), and compression spring (27).

5. REPAIR (See figures 2 and 3.)

A. Repair

(1) Remove minor scratches, pitting or corrosion by polishing lightly with 220 grit or finer abrasive cloth.

(2) Repair minor defects in threaded areas with small triangular file or thread chaser.

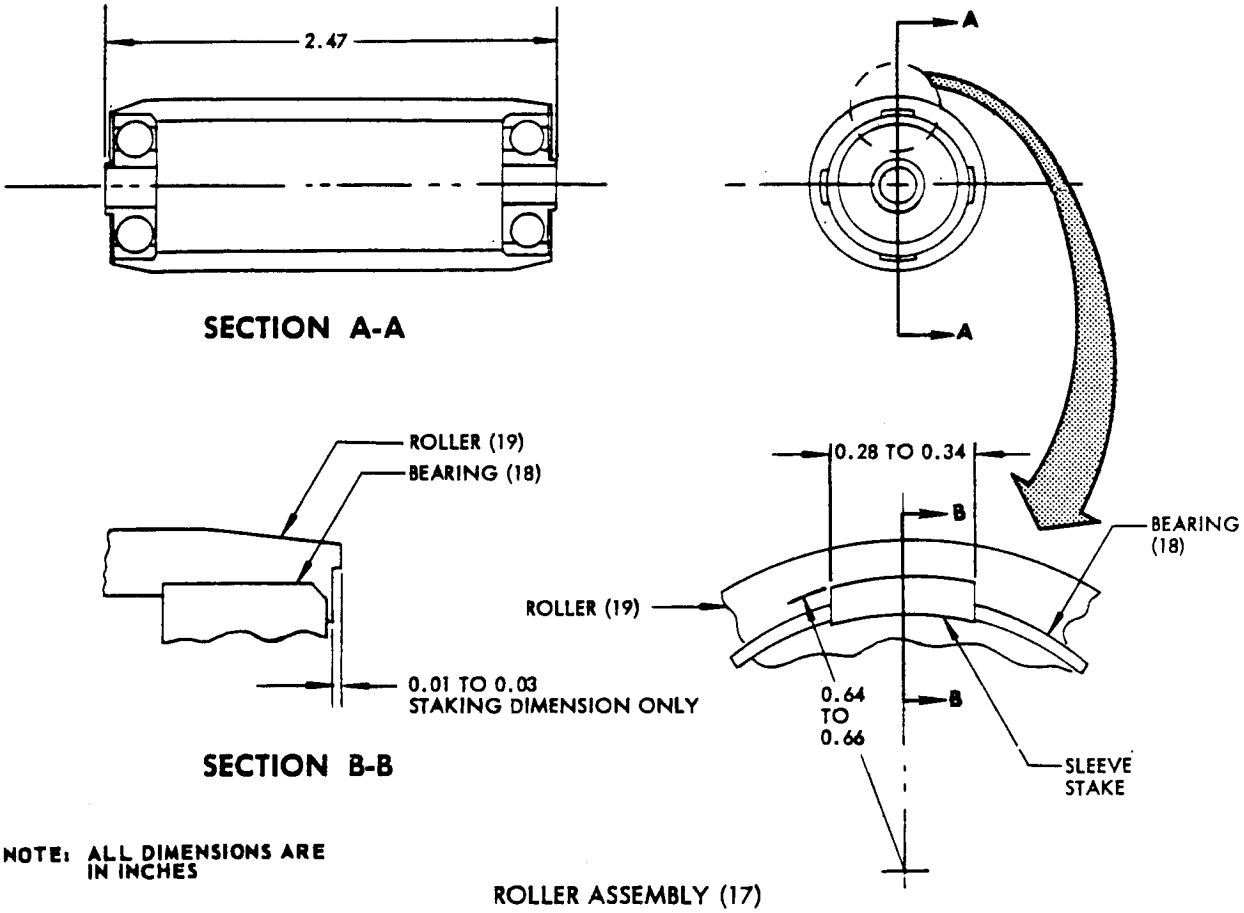

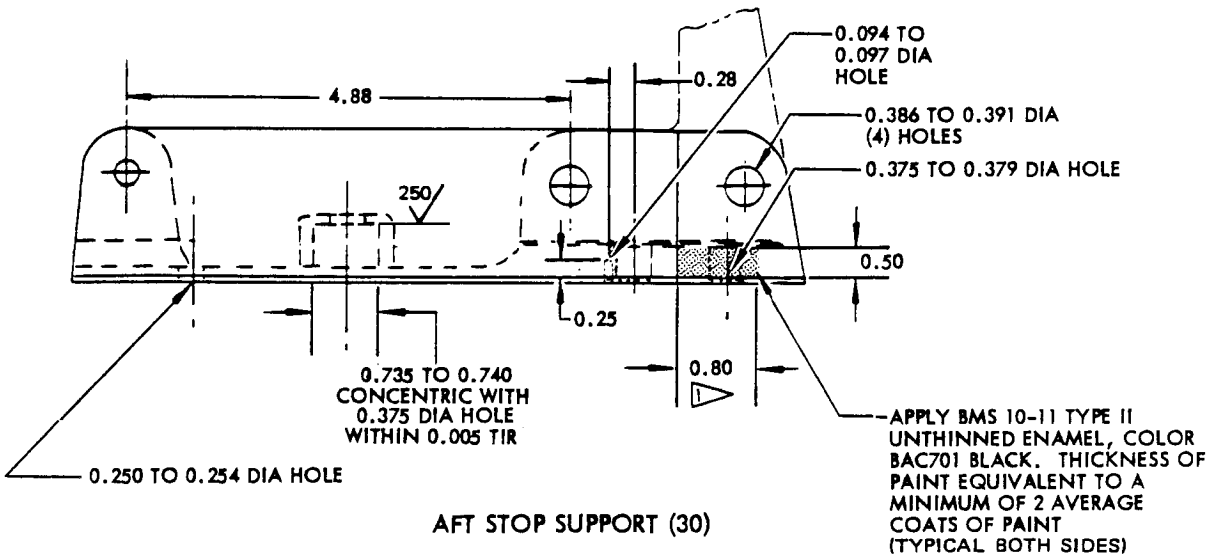

1 MEASURED AFT FROM STOPPING FACE OF STOP (8)

Repair and Refinish
Figure 2

B. Refinish

NOTE: Refer to 20-30-02 for stripping of protective finishes and to 20-41-01 for explanation of F and SRF finish codes.

(1) Deleted.

(a) Stop (8) -- Sulfuric acid anodize to meet the requirements of MIL-A-8625, type 2 (dyed red similar to Federal Standard 595, No. 11105. Material: Al Alloy.

(b) Roller (19) -- Apply F-2.26 to entire surface. Material: Al Alloy.

(c) Lever (24) -- Apply F-2.26 all over then apply BMS 10-11, type 2 unthinned enamel, color BAC702 (gloss white) per SRF-12.63. Material: Al Alloy.

(d) Shear Stud (28) -- Apply F-2.26 all over. Material: Al Alloy.

(e) Aft Stop Support (30) -- Apply F-2.26 to entire surface. Apply BMS 10-11, type 2 unthinned enamel, color BAC701 (black), two-coat thickness to area indicated in Fig. 2. Material: Al Alloy.

(f) Shackle (4) -- Apply F-1.1926 all over. Material: Steel, AMS 4140, 180-200 ksi.

(g) Springs (25 and 27) -- Apply F-1.1926 all over. Material: Music wire.

(h) Stud (12) -- Apply F-1.1913 all over. Material: Steel, AMS 4140, 180-200 ksi.

(i) Stud (22) -- Apply F-1.1913 all over. Material: Steel, AMS 4140, 160-180 ksi.

C. Replacement

(1) Replace spring pins (9 and 23), tubular rivet (23) and all parts damaged beyond simple repair.

(2) If necessary to replace bearings (18), press in roller (19)(1.2490- to 1.2495-inch diameter) bores and sleeve stake at locations indicated in Fig. 2 in accordance with 20-50-03.

(3) If replacement of Metal-Cal (29) is necessary, replace in accordance with 20-50-05.

6. ASSEMBLY (See figure 3.)

A. Deleted

B. Position compression spring (27), shear stud (28), washer (26), torsion spring (25) and lever (24) in aft stop support (30). Apply an upward pressure to stud (28) while installing spring pin or tubular rivet (23).

NOTE: Working force of spring (27) is approximately 7 pounds.

C. Install stud (22) in aft stop support (30) with washer (21) and nut (20).

D. On assembly 69-35293-1, install roller assembly (17) with spacer (16), bolt (15), washer (14) and nut (13).

E. Install spring pin (9) with 0.22- to 0.28-inch protrusion.

F. Install tension studs (12) with washer (11) and nut (10).

NOTE: Tension stud fingers should point aft.

G. Install stop (8) with bolts (7), washers (6) and nuts (5).

H. Install shackle (4) on stop (8) with bolt (3), washer (2) and nut (1).

7. TESTING (See figure 3.)

A. Test Equipment

(1) None required.

B. Functional Test

(1) Check shackle (4) for freedom of movement through an arc of at least 180°.

(2) Check roller assembly (17) for smooth rotation.

(3) Check shear stud (28) for smooth operation and positive spring action by cycling a minimum of three times.

8. TROUBLE SHOOTING (See figure 3.)

	Trouble	Possible Cause	Correction
A.	Roller assembly (17) binding, paragraph B.(2)	Foreign matter accumulation in bearings (18)	Disassemble and clean
		Bearings (18) defective. Bolt (15) broken or bolt holes elongated	Replace bearings (18) or stop support (30)
B.	Lever (24) fails to flip up when shear stud (28) is pressed upward, paragraph B.(3)	Torsion spring (25) weak or broken	Replace spring (25)
C.	Shear stud (28) binding, paragraph B.(3)	Foreign matter accumulation in aft support stop (30), shear stud cavity	Disassemble, clean and inspect stud (28)
		Spring (27) weak or broken	Replace spring (27)

9. STORAGE INSTRUCTIONS

A. Wrap entire unit in vapor barrier paper. Tag with test date and store.

B. For further information, refer to Subject 20-44-02, "Temporary Protective Coatings."

10. ILLUSTRATED PARTS LIST

A. Exploded View

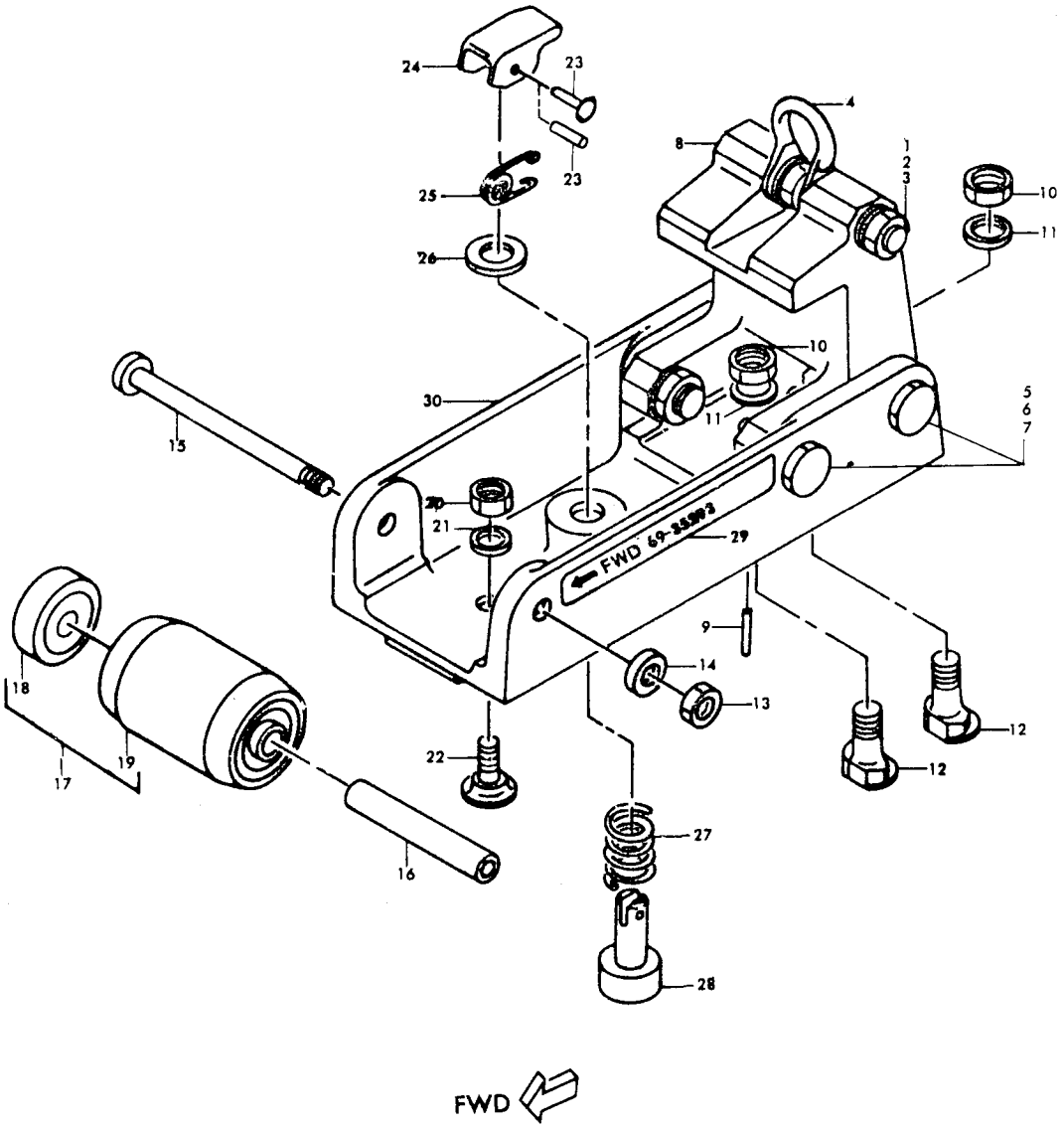

Palletized Cargo System Aft Stop Assembly
Figure 3

B. Group Assembly Parts List

FIG. & ITEM NO.	PART NO.	AIRLINE PART NUMBER	NOMENCLATURE 1 2 3 4 5 6 7	USE CODE	QTY PER ASSY
3-	69-35293-1		PALLETIZED CARGO SYSTEM AFT STOP ASSY	A	
	69-35293-2		PALLETIZED CARGO SYSTEM AFT STOP ASSY	B	
	69-35293-3		PALLETIZED CARGO SYSTEM AFT STOP ASSY	C	
1	BACN10JC6		. NUT (REPLS NAS679A6)	AC	1
1	BACN10JC5		. NUT (REPLS NAS679A5)	B	1
2	AN960D616		. WASHER	AC	1
2	AN960D516		. WASHER	B	1
3	NAS1105-40		. BOLT	B	1
3	NAS1106-40		. BOLT	AC	1
4	SP3556-1		. SHACKLE, V96603 (BOEING 10-60951-8)	B	1
4	SP3556-2		. SHACKLE, V96603 (BOEING 10-60951-9)	AC	1
4	B1010		. SHACKLE, V98926 (BOEING 10-60951-11) (OPT TO SP3556-2)	AC	1
5	BACN10JC6		. NUT (REPLS NAS679A6)		4
6	AN960-616L		. WASHER		4
7	NAS1106-13		. BOLT		4
8	69-29672-1		. STOP	B	1
8	69-35412-1		. STOP	AC	1
9	MS16562-25		. PIN, SPRING		1
10	BACN10JC6		. NUT (REPLS NAS679A6)		2
11	AN960-616L		. WASHER		2
12	69-29654-1		. STUD		2
13	BACN10JC4		. NUT (REPLS NAS679A4W)	A	1
14	AN960-416L		. WASHER	A	1
15	NAS1104-50		. BOLT	A	1
15	BACB30NE4-48		. BOLT (OPT TO NAS1104-50) (REPLS AN4-33A)	A	1
16	69-34578-3		. SPACER	A	1
17	69-34574-2		. ROLLER ASSY	A	1
18	22075-78		. . BEARING, V09721 (PREFD)		2
18	568A		. . BEARING, V73134 (OPT)		2
19	69-34573-1		. . ROLLER		1
20	BACN10JC4		. NUT (REPLS NAS679A4W)		1
21	AN960-416L		. WASHER		1
22	69-29644-4		. STUD		1
23	MS16535-189		. RIVET, TUBULAR (PREFD)		1
23	MS16562-223		. PIN, SPRING *[1]		1

FIG. & ITEM NO.	PART NO.	AIRLINE PART NUMBER	NOMENCLATURE 1 2 3 4 5 6 7	USE CODE	QTY PER ASSY
3-					
24	69-39931-1		. LEVER (PREF)		1
24	69-29627-1		. LEVER *[1]		1
25	66-20981-1		. SPRING		1
26	BACW10AT36		. WASHER		1
27	MS24585C358		. SPRING, COMPRESSION		1
28	66-20783-1		. STUD, SHEAR		1
29	BACM10L12BXZ		. METAL-CAL	A	1
29	BACM10L12BYA		. METAL-CAL	B	1
29	BACM10L12CCN		. METAL-CAL	C	1
30	65-44139-1		. STOP, SUPPORT AFT		1

*[1] Lever, 69-29627-1 and Spring Pin, MS16562-223, optional to Lever, 69-39921-1, and Tubular Rivet, MS16535-189, on assemblies 69-35293-1 and -2 only.

VENDOR CODE

V09721 General Bearing Co. Inc., Route 303, Blauvelt, New York 10913

V73134 Incom International, Heim Universal Division, 60 Round Hill Road, Fairfield, Connecticut 06430

V96603 Breeze-Eastern Corporation, Route 313, Box 110, Doylestown, Pennsylvania 18901

V98926 Boeing Commercial Airplane Company, 1900 N.E. Sandy Boulevard, P.O. Box 20487, Portland, Oregon 97220