TO: ALL HOLDERS OF BALL TRANSFER PANEL GENERAL INFORMATION, 25-57-20

REVISION NO. 2, DATED JUN 1/97

HIGHLIGHTS

DESCRIPTION OF CHANGE	TOPICS AFFECTED												
	D & O	D / Assy	Cleaning	Insp/Chk	Repair	Assy	F/C	Test	T/Shooting	S/Tools	Storage	IPL	L/Overhaul
Added reference to Structural Repair Manual, Chapter 51					X								

BALL TRANSFER PANEL GENERAL INFORMATION

25-57-20

BOEING P/N NO ASSIGNED PART NUMBER

AIRLINE P/N

THE FOLLOWING DIRECTIVES APPLY TO THIS SUBJECT:

BOEING SERVICE BULLETIN	BOEING TEMPORARY REVISION	OTHER DIRECTIVES	DATE DIRECTIVE INCORPORATED INTO TEXT

LIST OF EFFECTIVE PAGES

* Indicates pages revised, added or deleted in latest revision
F Indicates foldout pages - print one side only

PAGE	DATE	PAGE	DATE	PAGE	DATE
25-57-20					
T-1	Jun 5/74				
T-2	BLANK				
* LEP-1	Jun 1/97				
LEP-2	BLANK				
T/C-1	Dec 5/74				
T/C-2	BLANK				
1	Jun 5/74				
2	Jun 5/74				
3	Dec 5/74				
4	Dec 5/74				
* 4A	Jun 1/97				
4B	BLANK				
5	Jun 5/74				
6	Jun 5/74				
7	Jun 5/74				
8	BLANK				

TABLE OF CONTENTS

Paragraph Title	Page
Description and Operation	1
Disassembly	1
Cleaning	3
Inspection/Check	3
Repair	4 A
Assembly	5
Fits and Clearances (not applicable)	
Testing	*[1]
Trouble Shooting	*[1]
Storage Instructions	*[1]
Special Tools, Fixtures, and Equipment	6
Illustrated Parts List	7
Light Overhaul (not applicable)	

*[1] Special instructions are not required. Use standard industry practices.

BALL TRANSFER PANEL GENERAL INFORMATION

1. DESCRIPTION AND OPERATION

A. Ball transfer panel assemblies consist mainly of spring-loaded ball unit assemblies mounted and aligned on riveted structural panel assemblies. Airplane attaching provisions are provided by use of spring-activated shear studs and seat track studs or bolts. Ball transfer panel assemblie provide a continuous omnidirectional rolling surface for cargo loads in any direction.

NOTE: Refer to Illustrated Parts Catalog for component configuration breakdowns. This overhaul manual gives overhaul general information as applied to ball transfer panel assembly mechanical components.

2. DISASSEMBLY (Fig. 4)

A. Use standard industry practices for disassembly of ball transfer panel assemblies, and additional procedures in steps B and C.

B. 65-XXXXX Series Part Numbers

(1) Remove ball retainers, ball units, ball springs, and ball spacers from structure panel assemblies as follows (Fig. 1):

(a) Remove screw.

WARNING: BALL UNITS ARE SPRING LOADED. RESTRAIN BALL RETAINERS WHEN RELEASING PRESSURE.

(b) Apply pressure to ball retainers, rotate ball retainers counterclockwise approximately 45 degrees and release pressure.

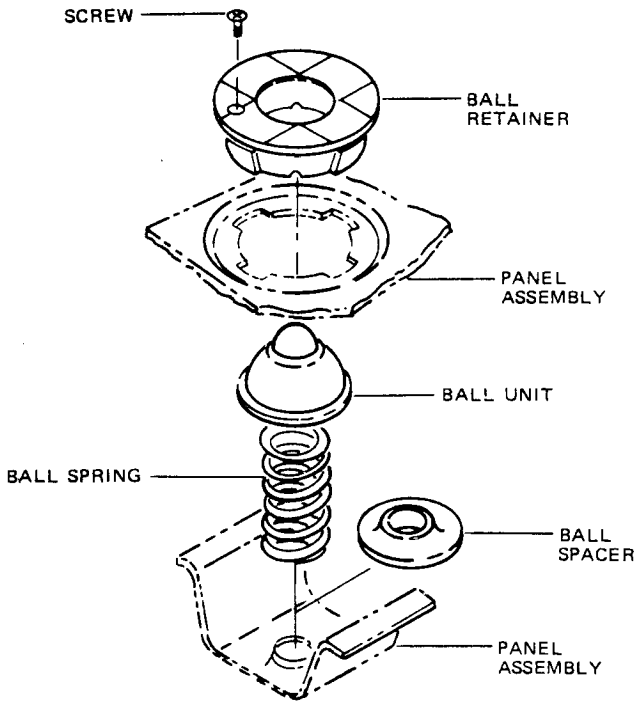

Disassembly Procedure (Typical)
Figure 1

C. 65BXXXXX Series Part Numbers

(1) Remove ball units from structure panel assemblies as follows:

(a) Insert tips of ball unit removal tool, MIT65B60146 or two screwdrivers into slots of ball units.

(b) Press lockbolts toward ball.

(c) With lockbolts retracted, lift ball unit from receptacle.

3. CLEANING (Fig. 4)

NOTE: Refer to 20-30-03 for cleaning all parts using standard shop practices, except as follows:

A. 65-XXXXX Series Part Numbers

(1) Clean ball units using cold alkaline method per 20-30-03. If solvent is required, use general purpose cleaning solvent, BMS 3-2, type 2 (Ref 20-60-01).

(2) Dry ball units using clean moisture-free air.

CAUTION: DO NOT LUBRICATE BALL UNITS.

NOTE: Make sure drain hole in bottom of ball cup is clear of foreign matter.

4. INSPECTION/CHECK (Fig. 4)

A. Check all parts for obvious defects in accordance with standard industry practices.

B. Magnetic/Penetrant Check

(1) Perform magnetic particle inspection per 20-20-01 on springs, seat track studs, and shear studs.

(2) Perform penetrant inspection per 20-20-02 on shear stud levers.

C. Special Checks

(1) Check springs 66-20715-1, 66-20715-2, 69B60669-1, 69B60670-1 and 69B60751-1 for load limits per Fig. 2.

(2) Check that each leg of spring (69-38412-3) is capable of deflecting 0.06 to 0.07 inch along bearing surface, with spring mounted on a flat surface, without taking permanent set, as indicated in Fig. 2.

Part No.	Test Length (inches)	Allowable Load Limit (pounds)
66-20715-1	1.05 (Free length 2.38)	50-60
66-20715-2	1.05 (Free length 2.38)	65-75
66-23600-1	0.64 (Free length 1.02)	48-58
69B60669-1	0.62 (Free length 4.24)	17-21
69B60670-1	0.86 (Free length 4.55)	35-43
69B60751-1	0.86 (Free length 4.30)	20-26

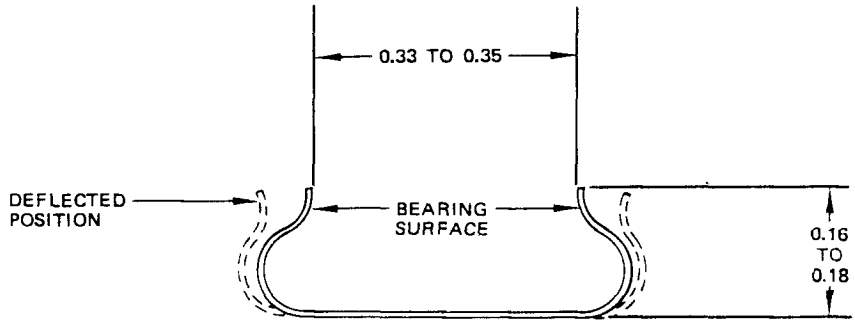

SPRING (P/N 69-38412-3)

Spring Check Data
Figure 2

5. REPAIR (Fig. 4)

A. Materials

NOTE: Use listed material or equivalent substitutes.

(1) Topcoat -- A-423 (Ref 20-60-02)

B. Rework

(1) Refer to Models 707, 720, 727, 737 or 747 Structural Repair Manuals, Chapter 51, as applicable, for general repair instructions for structural parts.

C. Refinish

NOTE: Refer to 20-30-02 for stripping of protective finishes and to 20-41-01 for explanation of F and SRF finish codes.

(1) Springs (66-20715-1, 66-20715-2, 69B60669-1, 69B60670-1 and 69B60751-1) -- Apply cadmium plate (F-1.1923) all over.

(2) Panel assemblies (65-44166-XX) -- Apply stenciled letters, arrows, and bars with one coat BMS 10-11, type 2 enamel, gloss (SRF-14.905-701). Apply two coats clear epoxy enamel, A423 (Ref 20-60-02) or equivalent topcoating, over stencils.

(3) Panel assemblies (65-51721-XX, 65-69500-XX) -- Reactivate primer, apply one coat BMS 10-11, type 1 primer (F-14.9961) and apply two coats epoxy walkway coating (F-19.19) over top surface except omit in 3.50-inch area around ball retainers on 65-51721-XX. Apply stenciled letters, arrows and bars with one coat BMS 10-11, type 2 enamel, semigloss (SRF-14.904-701). Apply two coats clear epoxy enamel, A-423 (Ref 20-60-02) or equivalent topcoating, over stencils.

(4) Panel assemblies (65-49105-XX, 65-57180-XX, 65-57185-XX, 65-63633-XX, 65-67808-XX) -- Apply stenciled letters, arrows, and bars with one coat BMS 10-11, type 2 enamel, semigloss (SRF-14.904-701). Apply two coats clear epoxy enamel, A-423 (Ref 20-60-02) or equivalent topcoating, over stencils.

(5) Spring (69-38412-3) -- Nickle plate .0005 to .001 inch thickness all over.

(5) Panel assemblies (65BXXXXX except 65B60780-XX) -- Reactivate primer, apply one coat BMS 10-11, type 1 primer (F-14.9961) and apply two coats epoxy walkway coating (F-19.19) over top surface.

(6) Panel assemblies (65B60780-XX) -- Apply two coats epoxy walkway coating (F-19.19) on upper surface and apply one coat BMS 10-11, type 2 enamel, color BAC702 gloss white to other exterior surfaces except omit paint from interior holes. Apply stencilled letters and bars with one coat BMS 10-11, type 2 enamel, gloss (SRF-14.905-701).

D. Replacement

(1) Apply new markers per 20-50-05 and apply one coat of clear epoxy enamel, A-423, over newly installed marker.

6. ASSEMBLY (Fig. 4)

A. Use standard industry practices for assembly of this component, and additional procedures in steps B and C.

B. Install ball units in 65BXXXXX series panel assemblies as follows:

(1) Insert tips of ball removal tool, MIT65B60146 or two screwdrivers into slots of ball units.

(2) Press lockbolts toward ball.

(3) With lockbolts retracted, install unit into receptacle.

C. Install ball units in 65-XXXXX series panel assemblies as follows (Fig. 3):

(1) Position spring in cup of ball unit.

(2) Position ball unit with spring in panel assembly.

(3) Position ball retainer on ball unit.

NOTE: Ball retainer locking fingers must be positioned to clear panel skin fingers.

(4) Apply pressure to ball retainer and rotate clockwise until fingers are engaged and hole for screw is aligned.

(5) Release pressure and install screw.

NOTE: Screw is for antirotation only and is to be drawn flush with ball retainer surface.

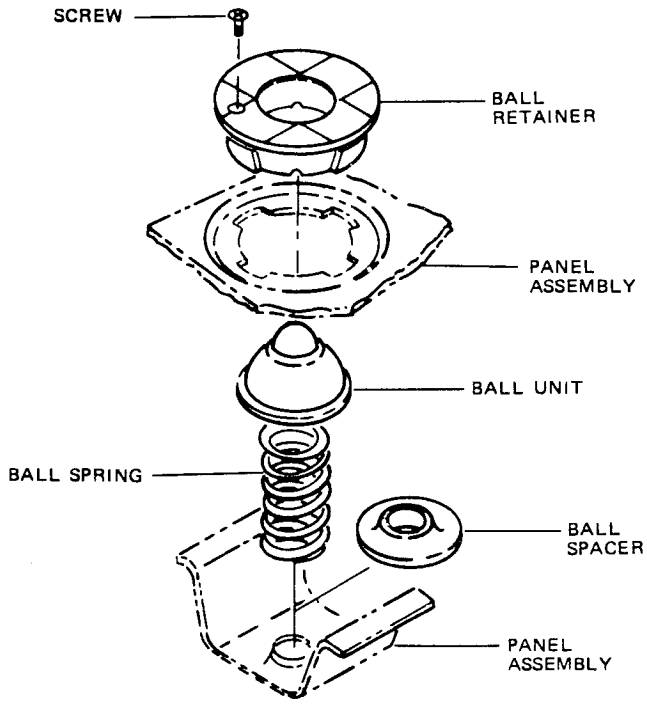

Assembly Procedure
Figure 3

7. SPECIAL TOOLS, FIXTURES, AND EQUIPMENT

NOTE: Equivalent substitutes may be used for listed items.

A. MIT65B60146 -- Ball transfer unit removal tool

NO ASSIGNED
PART NUMBER

8. ILLUSTRATED PARTS LIST

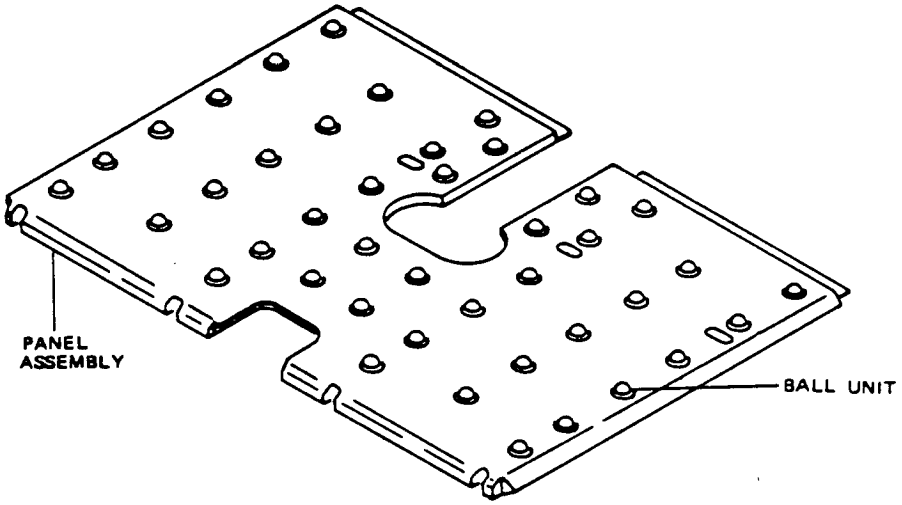

P/N 658XXXXX SERIES BALL TRANSFER PANEL ASSEMBLY (TYPICAL)

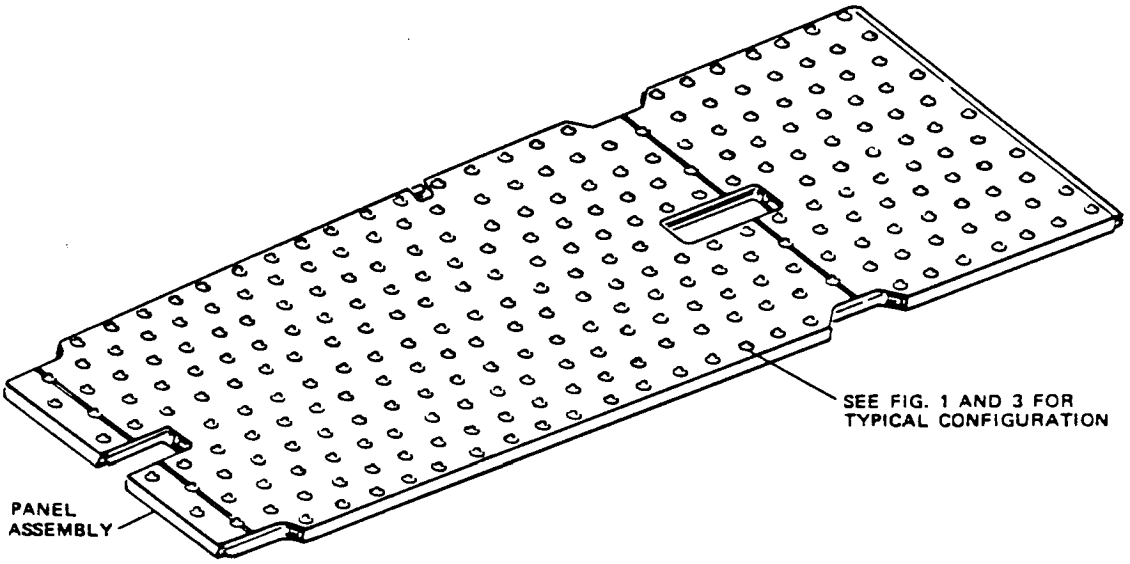

P/N 65-XXXXX SERIES BALL TRANSFER PANEL ASSEMBLY (TYPICAL)

Ball Transfer Panel Assembly
Figure 4