TO: ALL HOLDERS OF TRAILING EDGE FLAP DRIVE TRANSMISSION ASSEMBLIES NO. 2 AND 7 OVERHAUL MANUAL, 27-55-52

REVISION NO. 27, DATED MAR 1/05

HIGHLIGHTS

DESCRIPTION OF CHANGE	TOPICS AFFECTED												
	D & O	D/Assy	Cleaning	Insp/Chk	Repair	Assy	F/C	Test	T/Shooting	S/Tools	Storage	IPL	L/Overhaul
Added details to the lockout torque test to clarify requirements at minimum lockout and maximum lockout								X					

BOEING PROPRIETARY - Copyright © - Unpublished Work - See title page for details.

TRAILING EDGE FLAP DRIVE TRANSMISSION ASSEMBLIES NOS. 2 AND 7

27-55-52

BOEING P/N 65-50252-2, -4 thru -8
65-50257-2, -4 thru -8

AIRLINE P/N

THE FOLLOWING DIRECTIVES APPLY TO THIS SUBJECT:

BOEING SERVICE BULLETIN	BOEING TEMPORARY REVISION	OTHER DIRECTIVES	DATE DIRECTIVE INCORPORATED INTO TEXT
		PRR 30472	Nov 15/67
27-1015, Rev 1		PRR 31291, -1	May 15/69
		PRR 31581	Nov 10/69
27-1036		PRR 31581-1	Dec 10/70
27-1048, Rev 2		PRR 32017	Jun 25/74
		PRR 32358	Sep 25/74

LIST OF EFFECTIVE PAGES

* Indicates pages revised, added or deleted in latest revision
F Indicates foldout pages - print one side only

PAGE	DATE	PAGE	DATE	PAGE	DATE
27-55-52		507	Mar 5/88		
T-1	Sep 25/74	508	Sep 1/96		
T-2	BLANK	509	May 15/69		
* LEP-1	Mar 1/05	510	May 15/69		
LEP-2	BLANK	511	May 15/69		
T/C-1	Dec 10/70	512	May 15/69		
T/C-2	BLANK	513	May 15/69		
1	Sep 5/88	514	Jun 25/75		
2	Jul 5/80	515	Sep 5/84		
101	Dec 5/92	516	BLANK		
102	Jul 5/81	601	Dec 5/92		
103	Jun 25/75	602	Dec 5/92		
104	Jun 25/75	603	Jun 25/73		
201	Mar 10/70	604	Jul 5/77		
202	BLANK	605	Jul 5/77		
301	Jan 5/83	606	BLANK		
302	BLANK	701	Nov 1/98		
401	Mar 5/84	* 702	Mar 1/05		
402	Jul 5/79	703	Mar 25/74		
402A	Sep 5/92	704	Sep 1/95		
402B	Mar 5/93	801	Sep 5/91		
402C	Mar 5/93	802	BLANK		
402D	BLANK	901	Dec 10/70		
403	Sep 5/86	902	BLANK		
404	Jul 5/76	1001	Jun 25/75		
405	Dec 25/75	1002	BLANK		
406	Dec 25/75	1101	Jun 5/88		
407	Dec 25/75	1102	Dec 5/92		
408	Dec 5/87	1103	May 15/69		
409	Dec 5/87	1104	May 15/69		
410	Sep 5/84	1105	Sep 5/88		
411	Jun 25/73	1106	Sep 5/88		
412	Jun 25/73	1107	Jun 5/89		
413	Mar 5/86	1108	Dec 25/75		
414	Sep 1/94	1109	Dec 25/75		
414A	Mar 5/93	1110	Jun 5/88		
414B	Jul 5/79	1111	Jun 5/88		
415	Jul 5/79	1112	BLANK		
416	Sep 5/84				
501	Jun 25/75				
502	Sep 1/96				
503	Sep 1/96				
504	Jun 25/75				
505	Jun 25/75				
506	Dec 5/92				

BOEING PROPRIETARY - Copyright © - Unpublished Work - See title page for details.

TABLE OF CONTENTS

Paragraph Title	Page
Description and Operation	1
Disassembly	101
Cleaning	201
Inspection/Check	301
Repair	401
Assembly	501
Fits and Clearances	601
Testing	701
Trouble Shooting	801
Storage Instructions	901
Special Tools, Fixtures, and Equipment	1001
Illustrated Parts List	1101

TRAILING EDGE FLAP DRIVE TRANSMISSION ASSEMBLIES NO. 2 AND 7

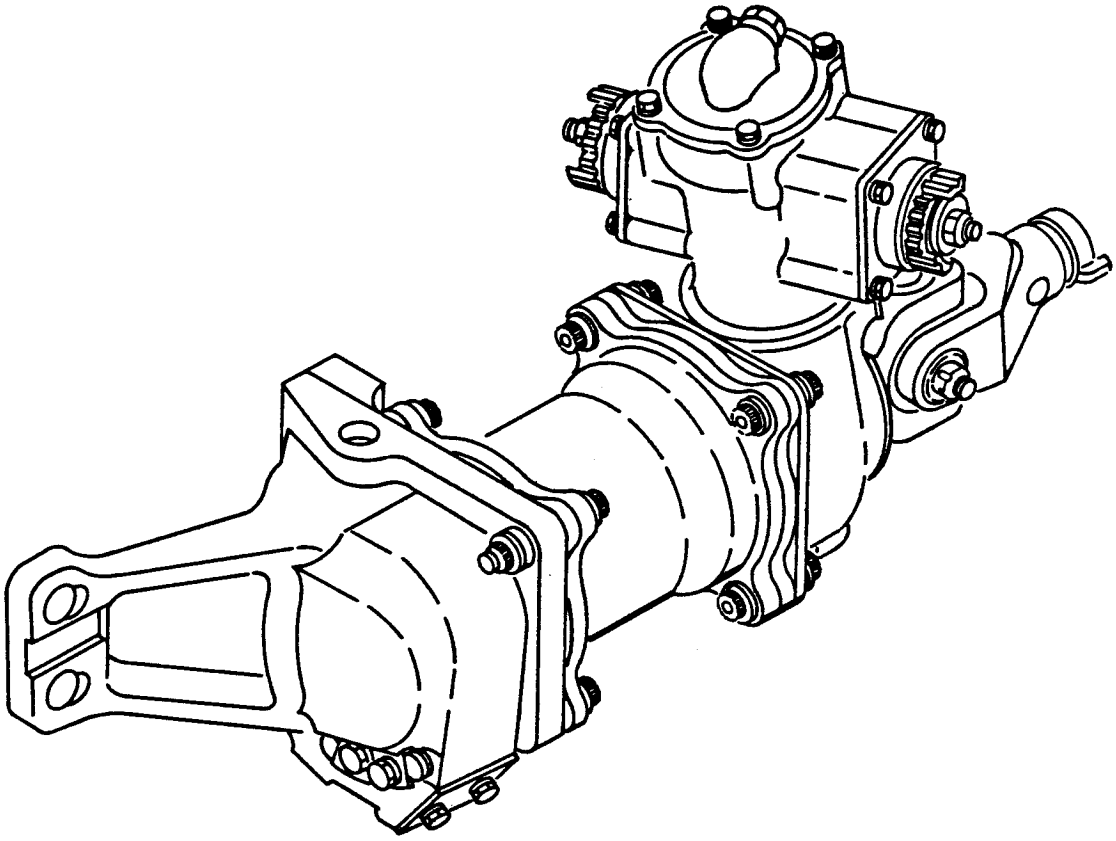

Trailing Edge Flap Drive Transmission Assemblies No. 2 and 7
Figure 1

DESCRIPTION AND OPERATION

1. Flap drive transmission assemblies No. 2 and 7 each consists of five bevel gears, a no-back ratchet mechanism, and a torque brake in a sealed, lubricant filled housing. Splined couplings connect the flap drive torque tube to the outboard flap outboard transmission. Output to the flap drive is transmitted thru a universal joint.

2. The flap drive transmissions provide a change in direction and an off-set of the flap drive torque tube rotary motion. Each assembly transmits torque tube rotary motion to linear motion thru a ball screw and nut assembly. Torque tube rotary motion is also transmitted to flap transmissions No. 1 and 8. The torque brake limits the amount of torque applied to the ball screw and nut. The no-back ratchet mechanism prevents counter-rotation and flap retraction until reverse rotary motion is applied by the flap drive torque tubes.

3. Leading Particulars (Approximate)

   Length -- 19.5 inches
   Width -- 9.5 inches
   Height -- 11.0 inches
   Weight -- 40 lb (including lubricant)

DISASSEMBLY

1. General (Fig. 1101)

   A. Prior to disassembly, measure and note the backlashes of gears (19 and 35) and gear (58). Refer to Fig. 601, for procedure and for backlash wear limits.

   B. Remove all lockwire.

   C. Remove plugs (1 and 3), O-rings (2 and 4), and drain hydraulic fluid from assembly.

2. Disassembly (Fig. 1101)

   A. Disassemble universal joint assembly (5) as follows:

      (1) Remove nut (7), bolt (9), spacer (10) from shaft (12).

      (2) Remove pin (11) and cross (13) from yoke (14).

      (3) If installed, remove tape (4) and placard (6) from yoke (12) and discard.

      NOTE: Do not remove bushings (15) from shaft (12) or yoke (14) unless replacement is necessary.

   B. Remove and disassemble gear (19) as follows:

      (1) Hold coupling (16) with Splined Coupling Wrench F71228, or equivalent, and remove nut (17), washer (18) and coupling (16).

      (2) Remove bolts (20), washers (21) and retainer (22).

      (3) Remove O-ring (23), seal (24) and shim (25) from retainer (22). Measure and note thickness of shim (25) to facilitate reassembly.

      (4) Remove gear (19) from housing (143).

      (5) Remove O-ring (26), backup rings (27), spacer (28), bearing (29), spacer (30) and bearing (31) from gear (19).

   C. Remove and disassemble gear (35) as follows:

      (1) Hold coupling (32) with Splined Coupling Wrench F71228, or equivalent, and remove nut (33), washer (34) and coupling (32).

(2) Remove bolts (36), washers (37) and retainer (38).

(3) Remove O-ring (39), seal (40) and shim (41) from retainer (38). Measure and note thickness of shim (41) to facilitate reassembly.

(4) Remove gear (35) from housing (143).

(5) Remove O-ring (42), backup rings (43), spacer (44), bearing (45), spacer (46) and bearing (47) from gear (35).

D. Remove and disassemble housing (68) as follows:

(1) Remove bolts (62), washers (63), retainers (64) and springs (66).

(2) Remove O-rings (65) from retainers (64).

(3) Remove nut (71), washer (72), bolts (73, 75, 76, 77) and nuts (74, 78).

(4) Separate housing (68) from support (109) and remove shim (97). Measure and note thickness of shim (97) to facilitate reassembly.

NOTE: Do not remove inserts (69, 70) from housing (68), unless repair or replacement is necessary.

(5) Remove bolts (79), washers (80), retainer (81), pins (82), pawl assemblies (84) and washers (88). Remove O-rings (83) from pins (82).

NOTE: Do not remove guides (85) or bearings (87) from pawls (86) unless repair or replacement is necessary.

E. Remove and disassemble no-back ratchet mechanism as follows:

(1) Straighten tangs of washer (89), hold shaft (12), and, using Torque Wrench Adapter ST6105-1, remove nut (90), washer (89), shim (94) and race (91). Measure and note thickness of shim (94) to facilitate reassembly. Discard washer (89).

(2) Remove bearing (93) from race (91). Remove retainer (95), ratchet (100) and retainer (99).

NOTE: Do not remove dowel (92) from race (91) or dowel (96) from retainer (95) unless repair or replacement is necessary.

(3) Remove bearing (98) and retainer (99) from ratchet (100).

(4) Remove bearing (101), washer (102) and driver (104). Remove bearing (103) from driver (104).

(5) Remove plate (107). Remove bearing (105) from plate (107). Remove support (106).

F. Tap end of output shaft (12) and remove shaft (12) from housing (143) and from torque brake assembly (108).

G. Remove and disassemble torque brake assembly (108) as follows:

(1) Remove nuts (122), washers (123) and bolts (124). Carefully separate torque brake housing (113) with attached parts from support (111). Temporarily reinstall nuts (122), washers (123) and bolts (124) to hold support (111) on housing (143). Use temporary spacers, approximately same thickness as lugs of housing (113), or use temporary bolts. Tighten nuts (122) to 180-250 lb-in.

(2) Remove support (109) from housing (113). Remove O-rings (120 and 121) from support (109). Remove rings (115) from housing (113).

(3) Remove spring pack assembly (114) from housing (113), using care not to distort or change relationship of spring ends. Remove shims (117) shown on Fig. 504.

NOTE: There may be two shims in each end, two shims in one end only, or no shims at all installed. Note number, location and thickness of shims to facilitate reassembly.

(4) Open center of Spring Pack Assembly Jig, ST6107, and slide assembled spring pack (114) into jig. Check that ends of spring set (119) contact locking lugs on bottom of circular portion of jig. Use Torque Bar, PT49001 to rotate upper ends of spring set in line with locking lugs of jig. Press lugs into place to restrain springs. Tighten set screws to prevent lugs from retracting.

(5) When spring ends are securely retained, turn cranks on assembly jig as evenly as possible to expand springs. Remove adapter (110) and sleeves (116 and 118).

(6) Rotate cranks in reverse direction to relieve spring load. Loosen set screws, back off locking lugs and remove spring set (119) from jig.

NOTE: Spring set (119) is a matched assembly of two springs. Identify as matched parts.

H. Hold gear (55) to prevent any motion. Measure and note backlash of gears (55) and (128). See Fig. 601 for procedure and for backlash wear limit.

I. Remove and disassemble gear (55) as follows:

(1) Remove bolts (48), washers (49) and cover assembly (50). Remove O-ring (53) from cover assembly (50).

NOTE: Do not remove tube (52) from cover (51) unless repair or replacement is necessary.

(2) Remove gear (55) with attached parts and shim (60) from housing assembly (142). Remove bearing (54) from gear (55). Straighten tangs of washer (56) and, using torque wrench adapter ST6105-2, remove nut (57), washer (56), gear (58), bearing (59) and shim (61) from gear (55). Measure and note thickness of shims (60, 61) to facilitate reassembly.

J. Remove and disassemble gear (128) as follows:

(1) Remove nuts (122), washers (123), bolts (124) and support (111) from housing assembly (142). Remove O-rings (125, 126) and shim (127) from support (111). Measure and note thickness of shim (127) to facilitate reassembly.

(2) Remove gear (128) from housing assembly (142). Use needle-nosed pliers to bend up one end of retaining ring (129) and work ring around grooves in gear (128) and coupling (112) until ring is free. Pull coupling (112) from assembled parts.

K. Remove bearing (130) from gear (128) and bearing (131) from housing assembly (142).

L. Remove nuts (132), washers (133) and screws (134) from housing assembly (142).

M. Remove retainer (135) and support (136) with attached parts.

N. Remove O-rings (137, 138, 138A) from housing assembly (142).

O. Remove bearing (139) or seal (139A), spacer (140) and seal (141) or bearing (141A) from support (136).

NOTE: Do not remove inserts (144), disk (144A), screws (145) or nameplate (146) from housing (143), unless repair or replacement is necessary.

CLEANING

1. General

   A. Wash and rinse all metal parts except bearings in dry cleaning solvent, Specification P-D-680. Use a stiff-bristle brush to remove dirt and grease. Clean all passages and bores.

   B. Dry parts with clean, lint-free cloth or with moisture-free compressed air.

   C. For further information refer to "General Cleaning Procedures," Subject 20-30-03.

2. Bearings (See figure 1101.)

   A. Clean bearings in accordance with "Cleaning and Relubricating Antifriction Bearings," Subject 20-30-01.

   B. Lubricate all bearings, except bearing (139), with hydraulic fluid, Specification MIL-H-5606. Lubricate bearing (139) according to manufacturer's instructions.

INSPECTION/CHECK

1. Check all parts for obvious defects in accordance with standard industry practices. Refer to Fits and Clearances for design dimensions and wear limits.

2. Penetrant check per 20-20-02 -- retainers (22, 38, 64, 81, 99, 135), cover (51), housings (68, 143), spacer (140), supports (109, 111).

3. Magnetic particle check per 20-20-01 -- bolt (9), shaft (12), yoke (14), couplings (16, 32, 112), gears (19, 35, 55, 128), pins (82), pawls (86), race (91), retainer (95), ratchet (100), driver (104), supports (106, 136), plate (107), adapter (110), housing (113), rings (115), sleeves (116, 118), and spring set (119).

REPAIR

1. Repair

A. Repair minor defects in accordance with standard industry practices. Refer to 20-10-01 for applicable instructions for rework and repair of high strength steel parts (180 ksi and above).

B. Cross (13) (Fig. 401) ID's for bolt (9), spacer (10) and pin (11).

(1) Machine as required to remove defects, observing 1.0271 max rework diameter. Machined Finish to be at least 63 microinch. No step or mismatch allowed.

(2) Shot-peen using size and intensity specified.

(3) Nickle plate per 20-42-09, 0.004-0.006 single plate thickness.

(4) Chrome plate per 20-42-03.

(5) Machine to design diameter of 0.9962-0.9971 per 20-10-04. Total plating thickness (nickle and chrome) after machining to be 0.015 max. Machined Finish to be at least 63 microinch.

(6) Magnetic particle examine per 20-20-01.

C. Bolt (9), spacer (10), pin (11), cross (13) exterior dimensions and coupling (16) - (Fig. 401)

(1) Machine, as required within work limits shown, to remove corrosion or defects. Observe surface finish requirements. Remove burrs and sharp edges. Smoothly blend all mismatch areas.

(2) Stress relieve per Fig. 406.

(3) Shot-peen using shot size and intensity indicated.

(4) Restore reworked surface, unless otherwise noted, by plating and machining to design dimensions and finish noted.

D. Torque Brake Rework (108) (Fig. 402)

CAUTION: REWORK PER FOLLOWING PROCEDURES MAY AFFECT INTERCHANGEABILITY IN ANY FUTURE OVERHAUL OR REPLACEMENT.

(1) To shift torque lockout level to a higher value, machine housing (113) surface as indicated on repair figure. Maintain finish and dimensions shown.

(2) To shift torque lockout level to a lower value.

(a) Machine spring set (119) and stress relieve as indicated (note amount of material removed).

(b) Buildup OD of sleeve with chrome plate as required to obtain finish diameter (after machining) equal to original OD plus amount that ID of spring set (119) was increased (+0.0000/-0.0005). A shift of torque lockout level relatively affects maximum or minimum lockout levels a corresponding amount.

E. Pawl assembly (84) worn bearing (87)

(1) Remove worn bearing.

(2) Manufacture aluminum bronze bearing with ID of 0.300-0.305 inch; OD interference fit with pawl (86) of 0.0005-0.0015 inch; and length of 0.410-0.420 inch. Break sharp corners.

(3) Install bearing into pawl (86) flush with adjacent surfaces. Machine bearing ID to 0.3125-0.3130 inch.

F. Pawl (86) 0.05-0.07 inch tip radii -- Grind to a surface finish of 125 microinches. Grinding beyond 0.075 inch is not permitted.

G. Ratchet (100) teeth -- Grinding OD or teeth depth to a surface finish of 125 microinches. OD must not exceed 3.075 inch and depth must not exceed 0.225 inch.

H. Thrust faces of driver (104) and plate (107) -- Grind to a surface finish of 16 microinches. Face width of driver must be minimum of 0.132 and face width of plate must be minimum of 0.423 after grinding.

I. Shaft (12) Bearing and seal OD, Lug holes (Fig. 404): Support OD (136) (Fig. 405).

(1) Magnetic particle examine per 20-20-01.

(2) Machine as required, within repair limits to remove defects.

(3) Shot peen using size and intensity specified.

(4) Chrome plate per 20-42-03. Grind to design diameter and finish noted.

(5) Magnetic particle examine per 20-20-01.

J. Yoke (14) (Fig 403)

(1) Oversize bolt hole repair.

(a) Machine bolt holes per 20-10-02 to dimension shown.

(b) Break sharp edges as indicated.

(c) Tag yoke to indicate that yoke must be used with oversize bolt (NAS3005E23 or equivalent) and with ballscrew with oversize bolt holes.

(2) Yoke ID corrosion removal

(a) Machine per 20-10-02 the yoke ID as required, within repair limit, to remove defects. Finish should be 32 microinches or better. No step or mismatch is allowed. Break sharp edges.

(b) Surface temper etch with ammonium persulphate per 20-10-02.

(c) Stress relieve at 350-400°F for 4 hours per 20-10-02.

(d) Magnetic particle check per 20-20-01, class B.

(e) Shot peen machined area per 20-10-03. Observe material heat treat criteria specified.

(f) Check if mating part (jackscrew) has been chrome plated. Use optional repair method for yoke if mating part has been chrome plated.

1) Build up ID with chrome plate per 20-42-03. Chrome plate runout 0.01-0.03 inch around edges of ID and all holes.

2) OPTIONAL REPAIR: Build up ID using electrodesposited nickel plate per 20-42-09, Type 3. Nickel plate runout 0.01-0.03 inch around edges of ID and all holes.

(g) Stress relieve per 20-10-02 within 10 hours of plating. Stress relieve bake at 350-400°F for 12 hours per 20-10-02.

(h) Grind yoke ID per 20-10-04 to design diameter shown. Surface finish to be 63 microinches or better.

(i) Magnetic particle check per 20-20-01, class B.

(j) Low hydrogen embrittlement stylus cad plate per 20-42-10 any unplated areas created due to chrome plate stops. Observe post plate bake requirements in 20-42-03.

(3) Trunnion hole corrosion removal

(a) Machine trunnion hole per 20-10-02 as required to remove corrosion within maximum repair limit shown. Finish to 32 microinches. Break sharp edges.

NOTE: Remove only enough material that is necessary to remove corrosion.

(b) Surface temper etch the machined area with ammonium persulphate per 20-10-02.

(c) Stress relieve at 350 - 400°F for 4 hours per 20-10-02.

(d) Magnetic particle check the machined area per 20-20-01, Class B.

(e) Shot peen the area shown using size, intensity and coverage specified per 20-10-03. Observe material heat treat criteria specified.

(f) Build up the hole diameter with chrome plate per 20-42-03. Chrome plate runout 0.01 - 0.02 inch around edges of hole. Do not chrome plate chamfered area.

(g) Stress relieve per 20-10-02 within 10 hours of plating. Stress relieve bake at 350 - 400°F for 12 hours per 20-10-02.

(h) Grind hole ID per 20-10-04 to the after plating design diameter shown. Surface finish to be 63 microinches or better.

(i) Magnetic particle check per 20-20-01, Class B.

(j) Low hydrogen embrittlement stylus cad plate per 20-42-10 any unplated areas created due to chrome plate stops. Observe post plate bake requirements in 20-42-03 (section 7).

2. Refinish (Fig. 1101)

NOTE: Refer to 20-30-02 for stripping of protective coatings, to 20-41-01 for explanation of F and SRF finish codes.

A. Bolt (9), spacer (10), pin (11), cross (13), coupling (16, 32) -- Fig. 401.

B. Gears (19, 35), supports (109, 111), housing (113) -- Fig. 403.

C. Shaft (12) -- Fig. 404

D. Support (136) -- Fig. 405.

E. Washers (18, 34) -- Cadmium-titanium plate (F-1.181) all over. Material: 4130 steel (120-150 ksi).

F. Retainers (22, 38) -- Anodize per AMS 2470 all over, plus one coat primer BMS 10-11, Type 1 (SRF-12.205) on external surfaces including smallest ID. Material: Al Alloy.

G. Spacers (28, 44) -- Cadmium-titanium plate (F-1.181) plus one coat primer BMS 10-11, type 1 (SRF-12.205) all over. Material: 4130 steel (RC 25-32).

H. Spacers (30, 46, 140), tube (52), retainer (99) -- Anodize per AMS 2470. Material: Alum alloy.

I. Cover (51), retainers (64, 81) -- Anodize per AMS 2470 all over, plus (SRF-12.205) on external surfaces only. Material: Alum alloy.

J. Housings (68, 143) -- Anodize per AMS 2470, plus one coat primer BMS 10-11, type 1 (SRF-12.205) on external surfaces only. Apply no primer to machined external surfaces. Material: Alum alloy.

K. Pin (82) -- Apply one coat primer BMS 10-11, type 1 (SRF-12.205) on external surfaces of head only. Material: MOD H-11 steel (RC 54-56).

L. Retainer (135) -- Anodize per AMS 2470, plus one coat primer BMS 10-11, type 1 (SRF-12.205) all over. Material: Alum alloy.

M. Spring set (119) -- Fig. 402.

3. Replacement (Fig. 1101)

A. Replace all O-rings and seals, ring (129) and washers (56, 89) at each overhaul.

B. and C. Deleted

D. Screws (145) or nameplate (146)

(1) Remove screws (145) and nameplate (146).

(2) Check condition of surrounding surface.

(3) Apply sealant, Loctite, Grade B (Ref 20-60-04) on screws, position nameplate and install screws while sealant is wet.

E. Inserts (69, 70, or 144)

(1) Remove damaged insert.

(2) Clean and check threads in bore of housing.

(3) Apply primer, BMS 10-11, type 1, to bore of housing and to insert. Install insert 3/4 to 1-1/2 turn below surface of housing while primer is wet. Cut tang.

F. Tube (52)

(1) Remove tube from cover.

(2) Clean and check condition of bore in cover.

(3) Apply adhesive, Eccobond 104 (Ref 20-50-12) to bore of cover and to outer surface of tube for a length of 0.37 inch.

(4) Insert tube in bore of cover to a depth of 0.37 inch and remove excess adhesive.

(5) Position cover assembly so that tube is upward and cure adhesive at 250°F for 6 hours.

G. Dowels (92 or 96)

(1) Press dowel from race or retainer.

(2) Check condition of bore in race or retainer.

(3) Press new dowel in race or retainer so that it is flush with outer surface of race or flush with inner surface of retainer.

H. Bond nylon disk (144A) to housing (143) per 20-50-12, Type 38.

I. Bushings (15)

(1) If installed bushings (15) meet inspection/check requirements, and the service wear limits are less than those shown in Fig. 601, mark position of bushings (15) in yoke (14) and shaft (12), rotate bushings 180 degrees, and reinstall per 20-50-03, using wet BMS 10-11, type 1, primer.

(2) If bushings (15) are damaged, or are worn beyond limits shown in Fig. 601, install new bushings (15) in yoke (14) and/or shaft (12) per 20-50-03 using wet BMS 10-11, type 1, primer.

4. Materials

A. Sealant -- Loctite, grade B (Ref 20-60-04)

B. Adhesive -- Eccobond 104 (Ref 20-60-04)

C. Primer -- BMS 10-11, type 1 (Ref 20-60-02)

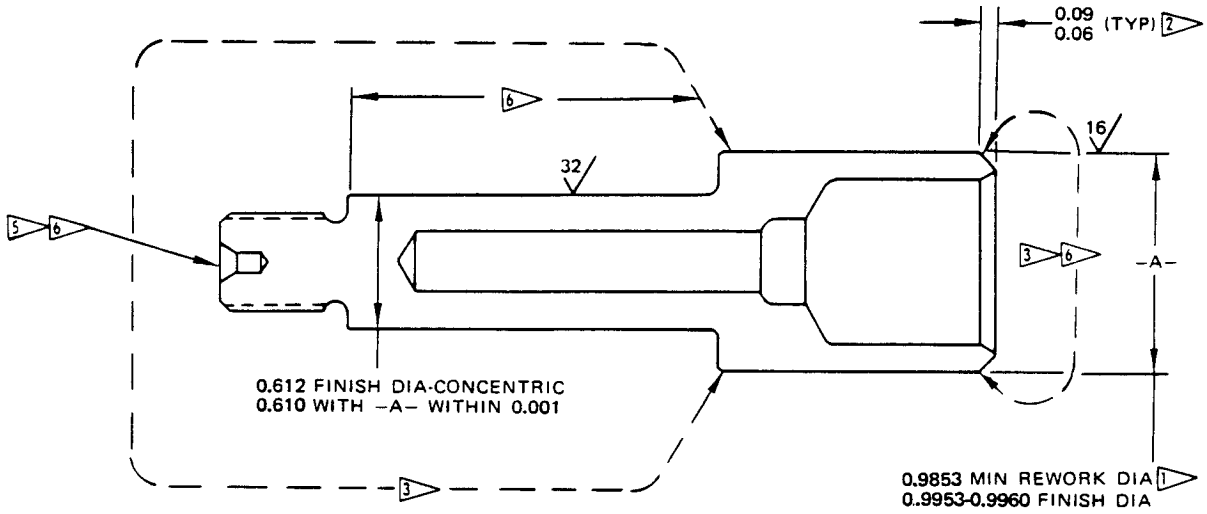

REFINISH 7

CHROME PLATE (F-15.04 DIA -A- CADMIUM-TITANIUM PLATE ALL OTHER SURFACES PER 3 APPLY PRIMER AND PAINT PER 6

REPAIR

AS NOTED BY 1 2

SHOT PEEN: (REFER TO 20-10-03)
0.027–0.033 SHOT SIZE
0.015 A2 INTENSITY

MATERIAL: (65-76604-1) 4340 M STEEL
(275–300 KSI)
(66-23909-1,-2) MOD H-11 STEEL
(RC 54-56)

BOLT (9)

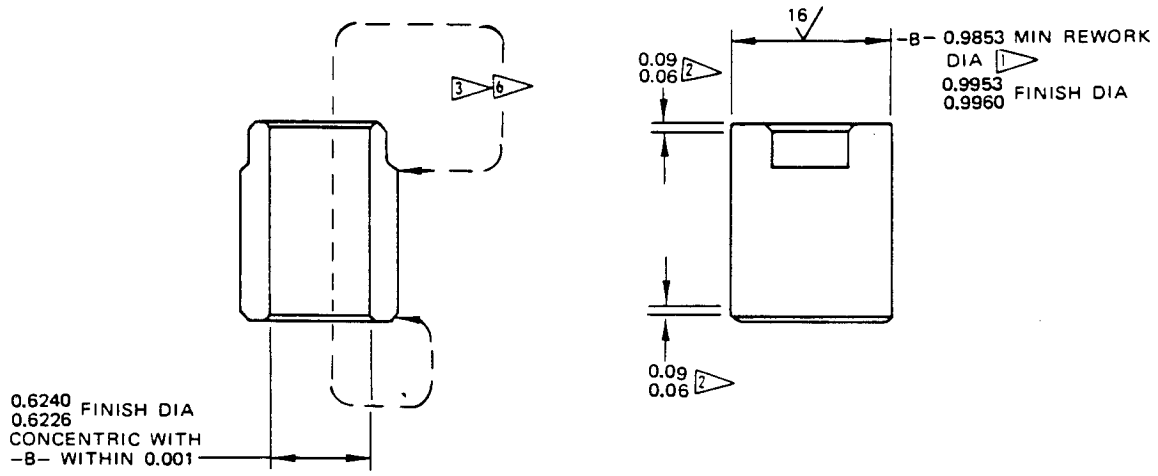

REFINISH 7

CHROME PLATE (F-15.04) DIA -B- CADMIUM TITANIUM PLATE ALL OTHER SURFACES PER 3. APPLY PRIMER AND PAINT PER 6

REPAIR

AS NOTED BY 1 2

SHOT PEEN: (REFER TO 20-10-03)
0.017-0.033 SHOT SIZE
0.015 A2 INTENSITY

BREAK SHARP EDGES 0.005-0.015R

MATERIAL: MOD H-11 STEEL (RC 54-56)

SPACER (10)

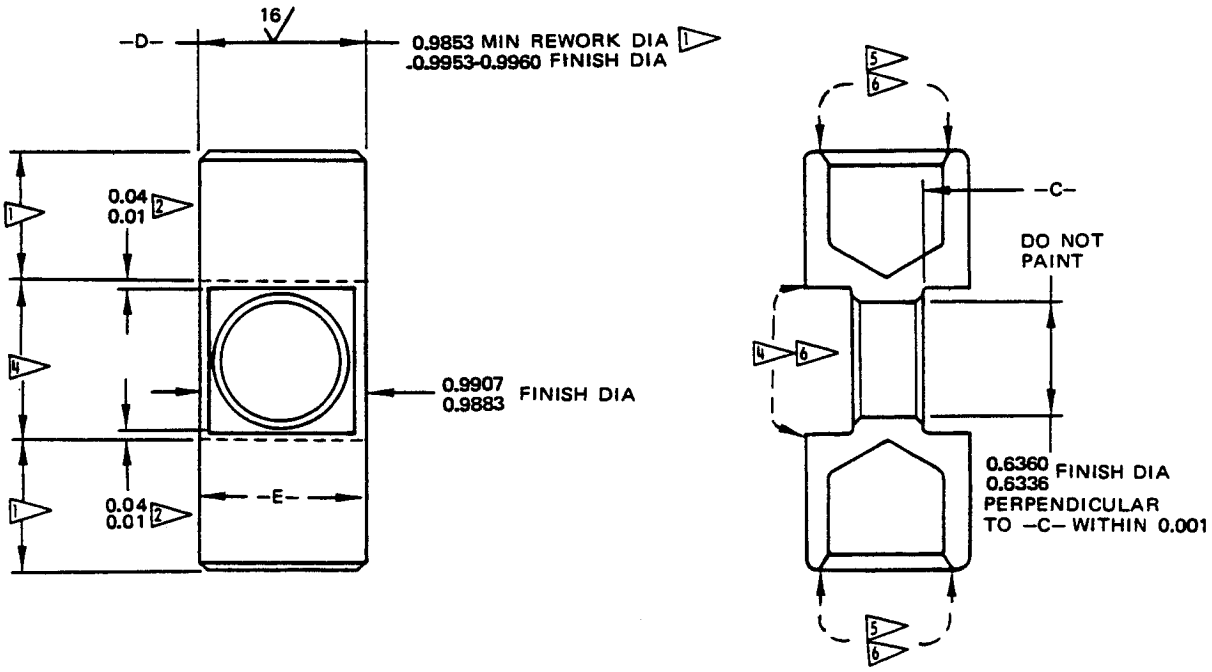

REFINISH 7

CHROME PLATE (F-15.04) DIAS -D- AND -E-
CADMIUM-TITANIUM PLATE ALL OTHER
SURFACES PER 4 APPLY PRIMER AND PAINT
PER 6

REPAIR

AS NOTED BY 1 2

SHOT PEEN: (REFER TO 20-10-03)

0.017-0.033 SHOT SIZE
0.015 A2 INTENSITY

BREAK SHARP EDGES 0.005-0.015R

MATERIAL: MOD H-11 STEEL (RC 54-56)

PIN (11)

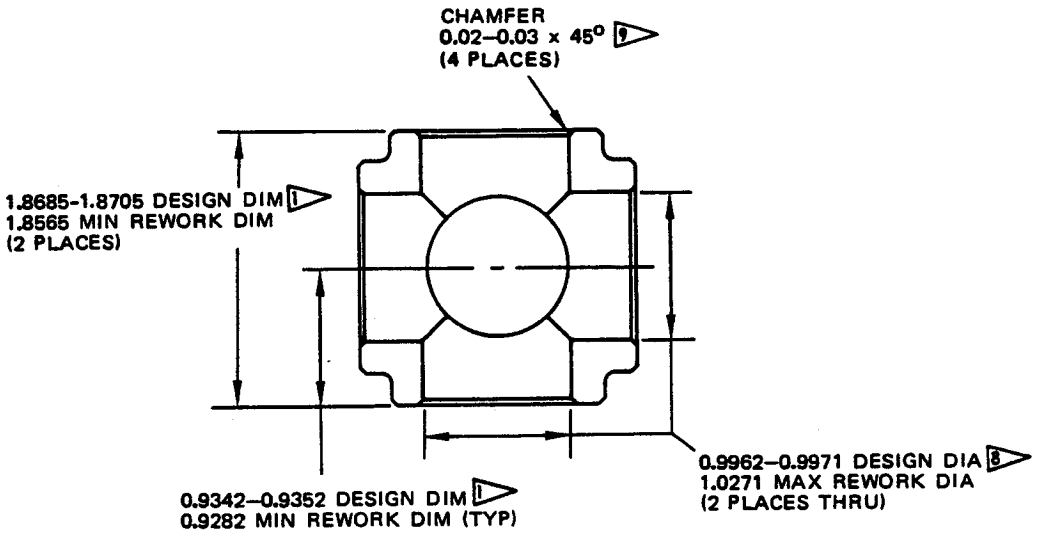

REFINISH

CHROME PLATE (F-15.04) OUTER SURFACES PER F-1.842 (0.003–0.005 PLATE THICKNESS)

REPAIR

AS NOTED BY 1

SHOT PEEN: (20-10-03)

0.017–0.033 SHOT SIZE
0.012 A2 INTENSITY

BREAK SHARP EDGES

MATERIAL: (65-76638-1) 15-5PH CRES PER AMS 5659 (180–200 KSI)
(69-37675-1) MOD H-11 STEEL (ROCKWELL C 54-56)

CROSS (13)

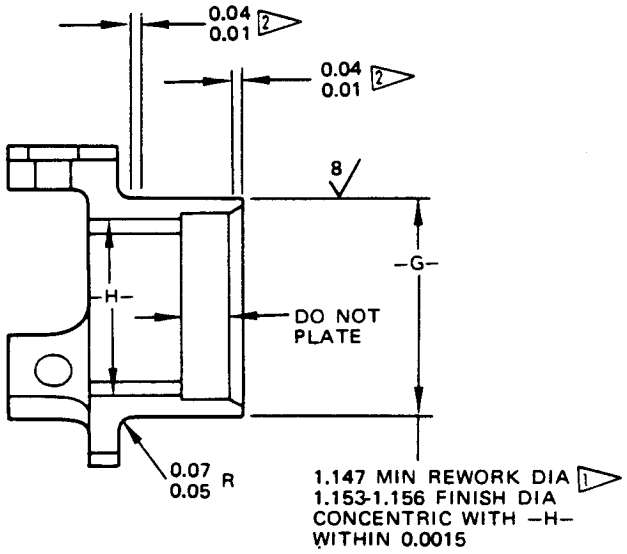

REFINISH

CADMIUM-TITANIUM PLATE ALL OVER PER 4 EXCEPT DIA -G- AND AS NOTED

REPAIR

DIMENSIONS NOTED BY 1 2

SHOT PEEN: (20-10-03)

0.017-0.033 SHOT SIZE
0.015 A2 INTENSITY

BREAK SHARP EDGES 0.003-0.020R

MATERIAL: 8740 STEEL PER AMS 6322 (RC 32-40

COUPLING (16, 32)

1 BUILD UP WITH CHROME PLATE (20-42-03) AND GRIND TO FINISH AND DIMENSIONS SHOWN. OBSERVE PLATING RUNOUT AS NOTED.

2 CHROME PLATE RUNOUT

3 CADMIUM-TITANIUM PLATE (F-1.18) 0.0003—0.0005 THICKNESS (20-42-02)

4 CADMIUM-TITANIUM PLATE (F-1.181) 0.0005—0.0007 THICKNESS (20-42-02)

5 CADMIUM-TITANIUM PLATE THROW IN PREFERRED IN THESE AREAS.

6 AFTER PLATING APPLY PRIMER (SRF-12.205) BMS 10-11, TYPE 1 AND PAINT (SRF-12.63) BMS 10-11, TYPE 2.

7 REPLACES ORIGINAL ELECTROLESS NICKEL PLATING

8 BUILD UP WITH NICKEL PLATE (20-42-09) (0.004—0.006 THICK) AND CHROME PLATE (20-42-03) AND MACHINE TO DESIGN DIMENSIONS SHOWN. TOTAL PLATE THICKNESS AFTER MACHINING TO BE 0.015 MAX.

9 CHROME PLATE STOP OFF AREA

ALL DIMENSIONS ARE IN INCHES

Miscellaneous Parts - Repair and Refinish
Figure 401 (Sheet 5)

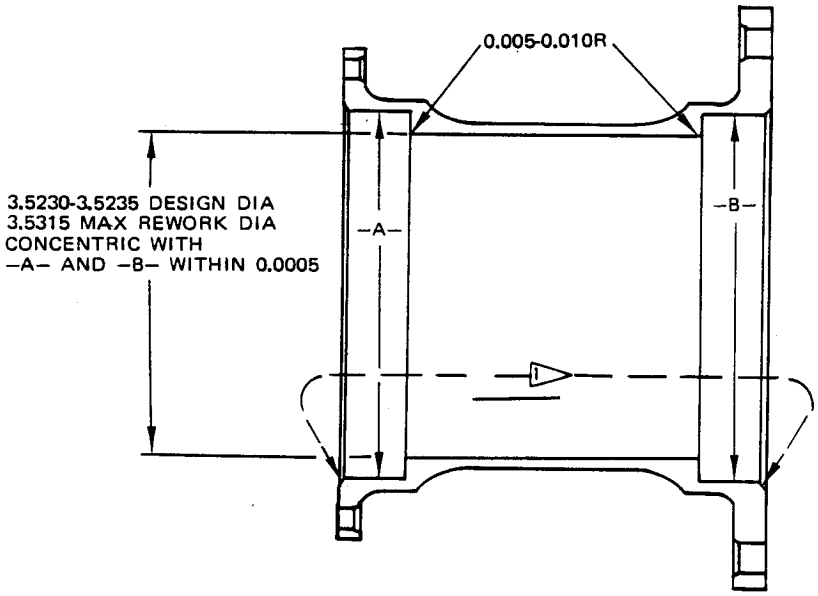

REWORK

MACHINE ID AS REQUIRED TO INCREASE TORQUE SETTING DESIRED AMOUNT (VALUE INCREASES 8.2 POUND INCHES FOR EACH 0.001 INCREASE OF ID)

MATERIAL: 9310 STEEL PER AMS 6265
RC 32–43 CORE HARDNESS
CARBURIZED, RC 60 MIN
AS NOTED

BREAK SHARP EDGES 0.01–0.02R UNLESS OTHERWISE NOTED.

1 CARBURIZED, 0.025–0.035 DEEP

TORQUE BRAKE HOUSING (113)

Torque Brake - Rework
Figure 402 (Sheet 1)

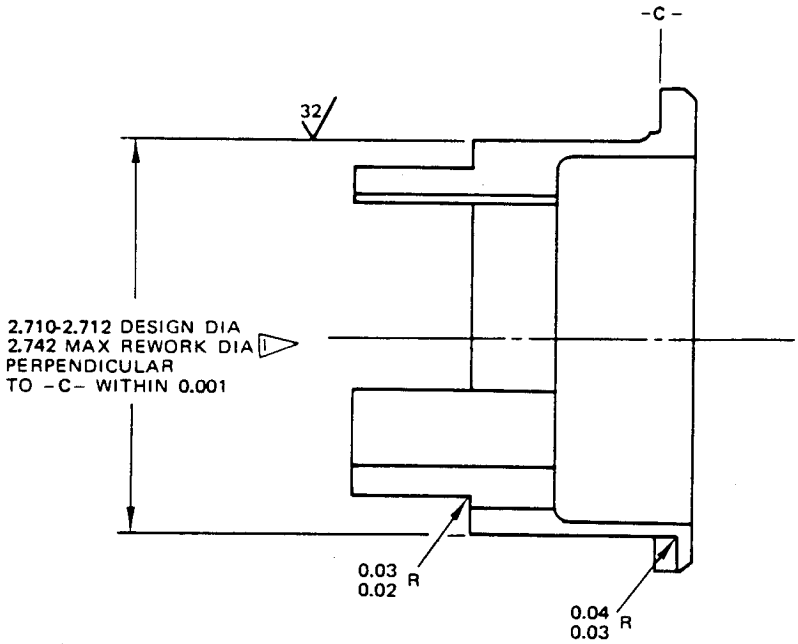

REPAIR

AS NOTED BY 1

MATERIAL: STEEL (HT 290-300 KSI)

BREAK SHARP EDGES 0.005-0.015R

SHOT PEEN: (REFER TO 20-10-03)

0.010-0.019 SHOT SIZE
0.012-0.015 A2 INTENSITY

SLEEVE (116)

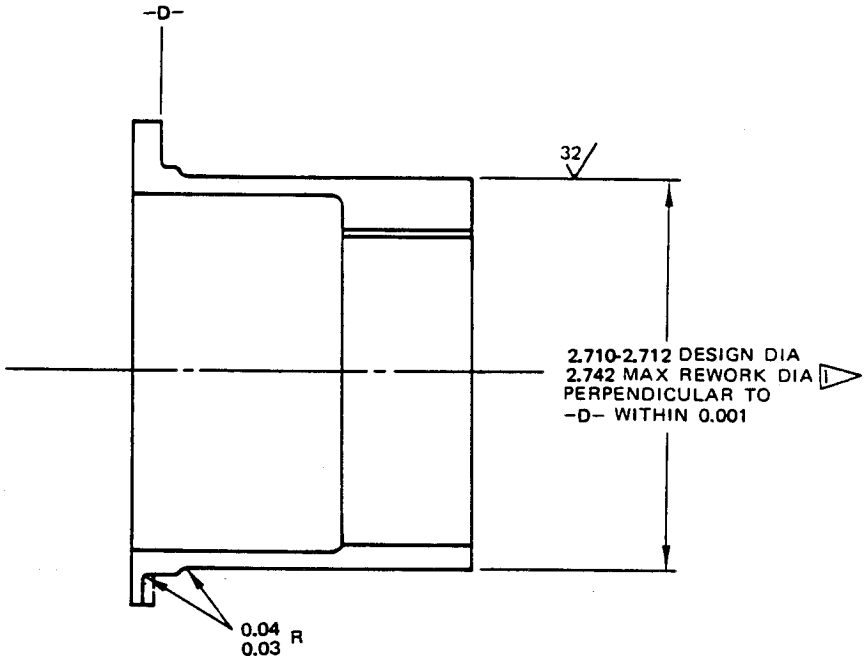

REPAIR

AS NOTED BY

MATERIAL: STEEL (HT 290-300 KSI)

BREAK SHARP EDGES 0.005-0.015R

SHOT PEEN: (REFER TO 20-10-03)

0.010-0.019 SHOT SIZE
0.012-0.015 A2 INTENSITY

SLEEVE (118)

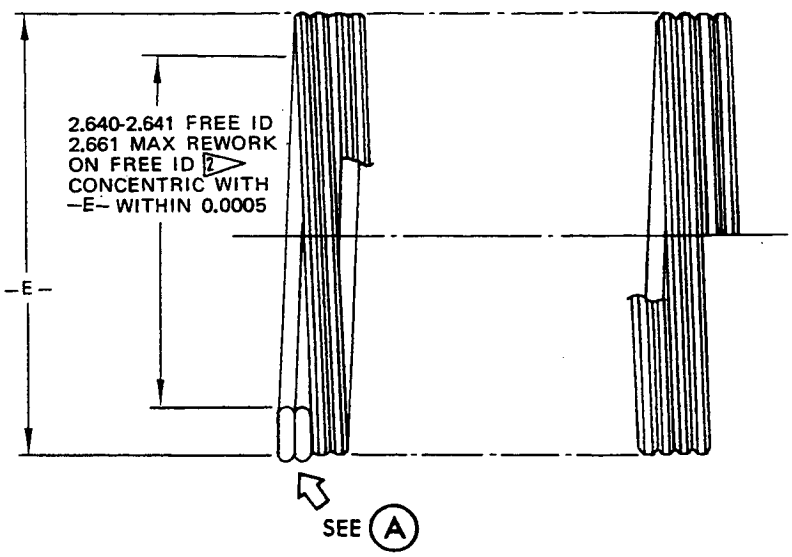

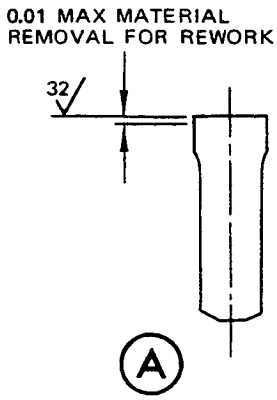

REFINISH

CADMIUM–TITANIUM PLATE ID AND SPRING FLANKS PER 20–42–02

REWORK

1. MACHINE ID AS REQUIRED TO DECREASE TORQUE LEVEL BY DESIRED INCREMENT (VALUE DECREASES 2.8 POUND-INCHES FOR EACH 0.001 INCREASE OF ID).
2. STRESS RELIEVE IN FOLLOWING ORDER:
   A. 320°-330°F FOR 1 HOUR
   B. 625°-675°F FOR 1 HOUR
   C. 920°-930°F FOR 2 HOURS
   D. AIR COOL AT 65°-75°F

MATERIAL: STEEL (HT 290-300 KSI)

BREAK SHARP EDGES 0.005-0.015R

SPRING SET (119)

ALL DIMENSIONS ARE IN INCHES

1 BUILD UP WITH HARD CHROME PLATE (REFER TO 20-42-03) AS REQUIRED TO OBTAIN FINISH DIA (AFTER MACHINING) EQUAL TO MEASURED OD PLUS AMOUNT THAT ID OF SPRING SET (119) WAS INCREASED (+ 0.0000,-0.0005)

2 NOTE AMOUNT ID IS INCREASED TO DETERMINE REWORK OF SLEEVES (116, 118)

Torque Brake - Rework
Figure 402 (Sheet 4)

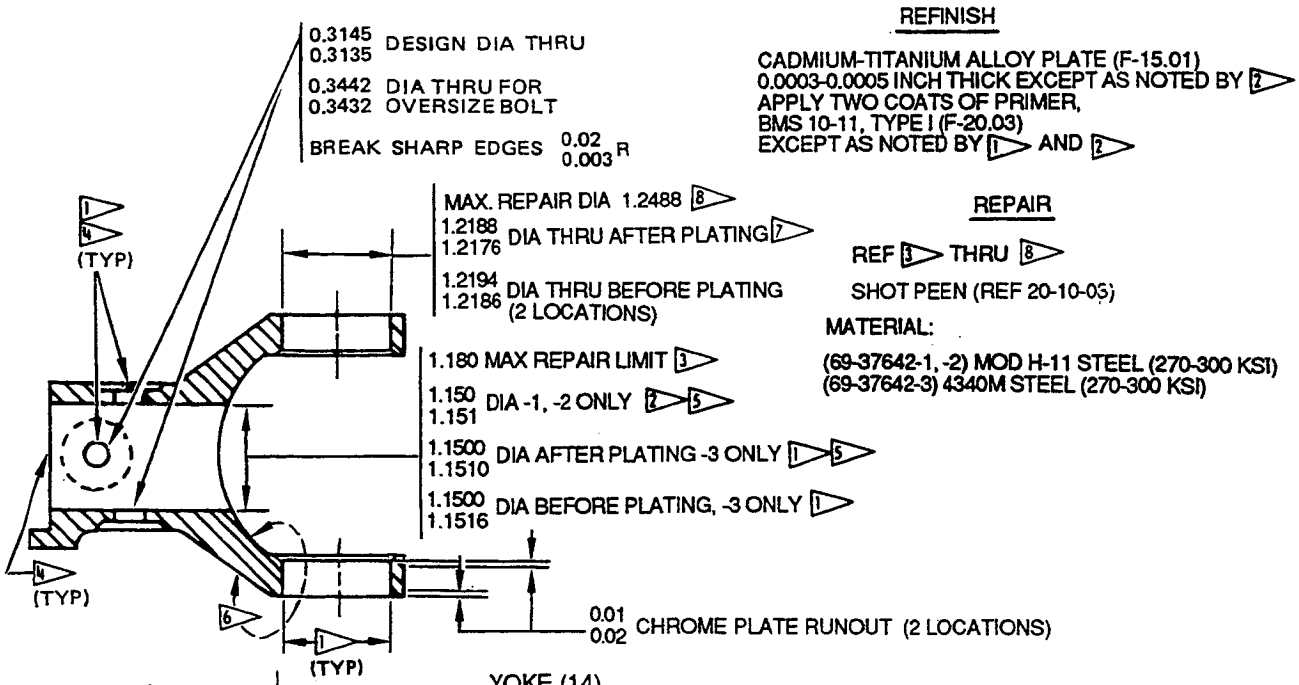

YOKE (14)

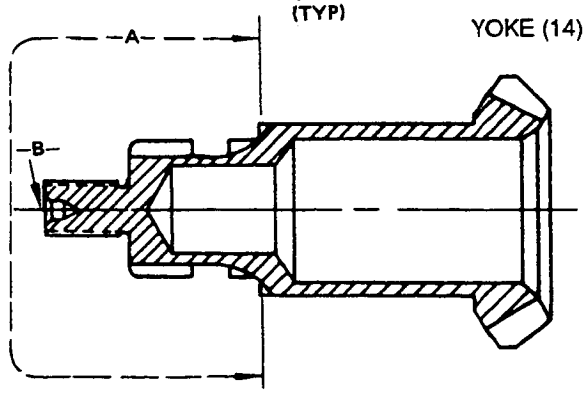

REFINISH

CADMIUM–TITANIUM PLATE (F-15.01)
AREA –A, (0.0003 – 0.0005 THICK ON
69–37605–3) (OPT IN AREA –B–).
APPLY PRIMER (SRF - 12.05), BMS
10–11, TYPE 1 TO AREA –B–

MATERIAL: (69-37605-3,-4) MOD H-11 STEEL (RC 54-56)
(69-37605-5) 4340M STEEL (270–300 KSI)

GEARS (19, 35)

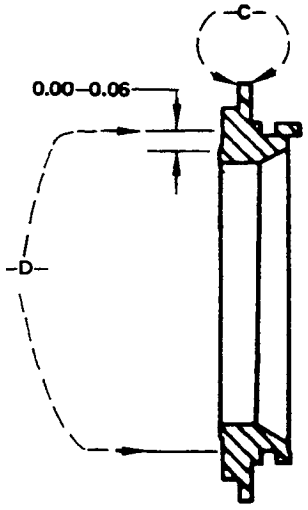

REFINISH

SUPPORTS (109, 111)
ANODIZE ALL OVER PER AMS 2470
APPLY PRIMER (SRF–12.205),
BMS 10-11, TYPE 1 TO AREA –C–
APPLY DRY LUBE PER 20-50-08,
METHOD 3TO AREA –D–

MATERIAL: AL ALLOY

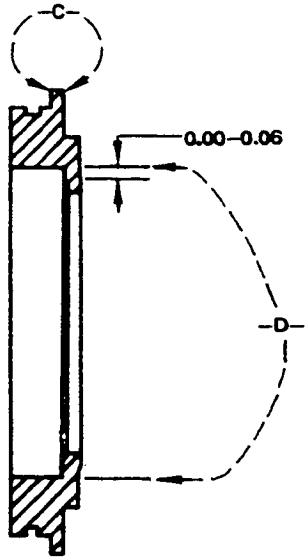

SUPPORT (109)

SUPPORT (111)

Refinish and Repair
Figure 403 (Sheet 1)

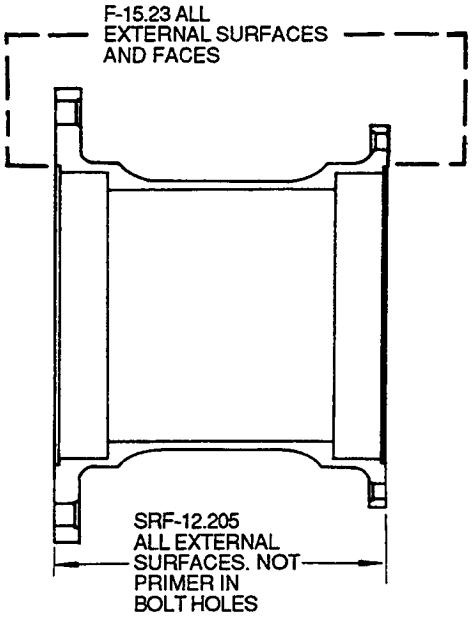

HOUSING (113)

1. NO SHOT PEEN OR PRIMER THIS SURFACE
2. NO CADMIUM-TITANIUM PLATING, SHOT PEEN OR PRIMER THIS SURFACE
3. BUILD UP WITH CHROME PLATE (REF 20-42-03) (OPTIONAL: ELECTRODEPOSITED NICKEL PLATE (REF 20-42-09))
4. PLATING RUNOUT 0.01-0.03 INCH AROUND EDGES OF ID AND ALL HOLES
5. OMIT CADMIUM-TITANIUM PLATING IF THIS SURFACE IS REPAIRED
6. SHOT PEEN AREA ALL AROUND HOLE AS SHOWN, 2 LOCATIONS
7. NO CAD-TI PLATING OR PRIMER THIS SURFACE IF REPAIRED
8. BUILD UP CHROME PLATE (REF 20-42-03)

ALL DIMENSIONS ARE IN INCHES

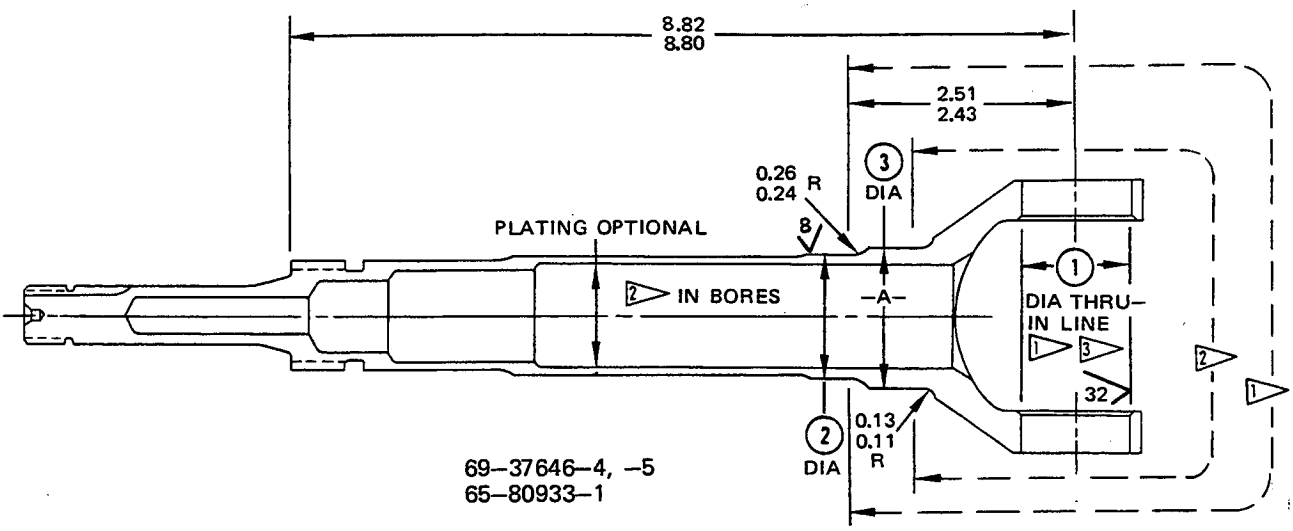

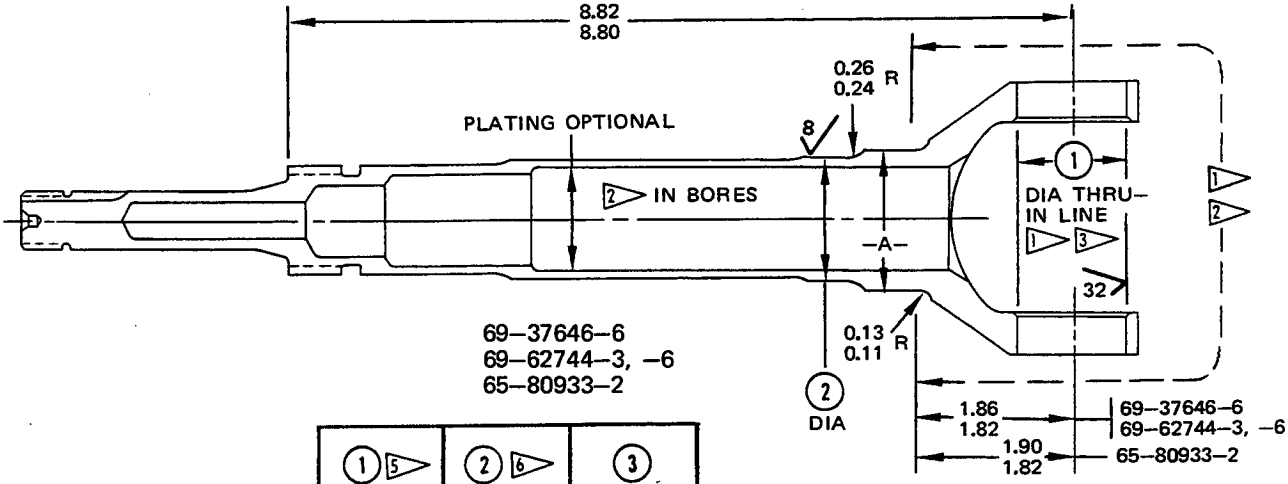

		1 5	2 6	3
69-37646-4, -5 65-80933-1	DESIGN DIA	1.2188 1.2176	1.378 1.376	1.5745 1.5730
	REPAIR LIMIT 4	1.227	1.3665	1.5533
69-37646-6 69-62744-3, -6 65-80933-2	DESIGN DIA	1.2188 1.2176	1.3774 1.3765	1.5637 1.5615
	REPAIR LIMIT 4	1.227	1.3665	–

REPAIR

AS NOTED 4

SHOT PEEN (REF 20-10-03):
0.017-0.039 SHOT SIZE
0.016 A2 INTENSITY

MATERIAL: (69-37646-4, -5, -6, 69-62744-3)
MOD H-11 STEEL (RC 54-56)
(65-80933-1, -2, 69-62744-6)
4340M STEEL (275–300 KSI)

1 CADMIUM–TITANIUM PLATE (F-1.18)

2 APPLY PRIMER, BMS 10-11, TYPE 1 (SRF-12.205) & ENAMEL (SRF-12.63) EXCEPT AS NOTED

3 DO NOT APPLY PRIMER & ENAMEL

4 BUILDUP WITH CHROME PLATE (REF 20-42-03) AND GRIND TO DESIGN DIMENSIONS. OBSERVE 0.03 MIN PLATING RUNOUT AT EDGES AND RAD II

5 THRU IN-LINE PERPENDICULAR TO DIA –A– WITHIN 0.001

6 CONCENTRIC TO DIA –A– WITHIN 0.002 TIR.

REFINISH

CADMIUM–TITANIUM PLATE SURFACES NOTED PER 1 (OPTIONAL IN BORES). APPLY PRIMER & ENAMEL TO SURFACES NOTED 2 EXCEPT AS NOTED 3

(FOR 69–37646–4, CADMIUM–TITANIUM REPLACES ORIGINAL CADMIUM PLATE)

Refinish and Repair
Figure 404

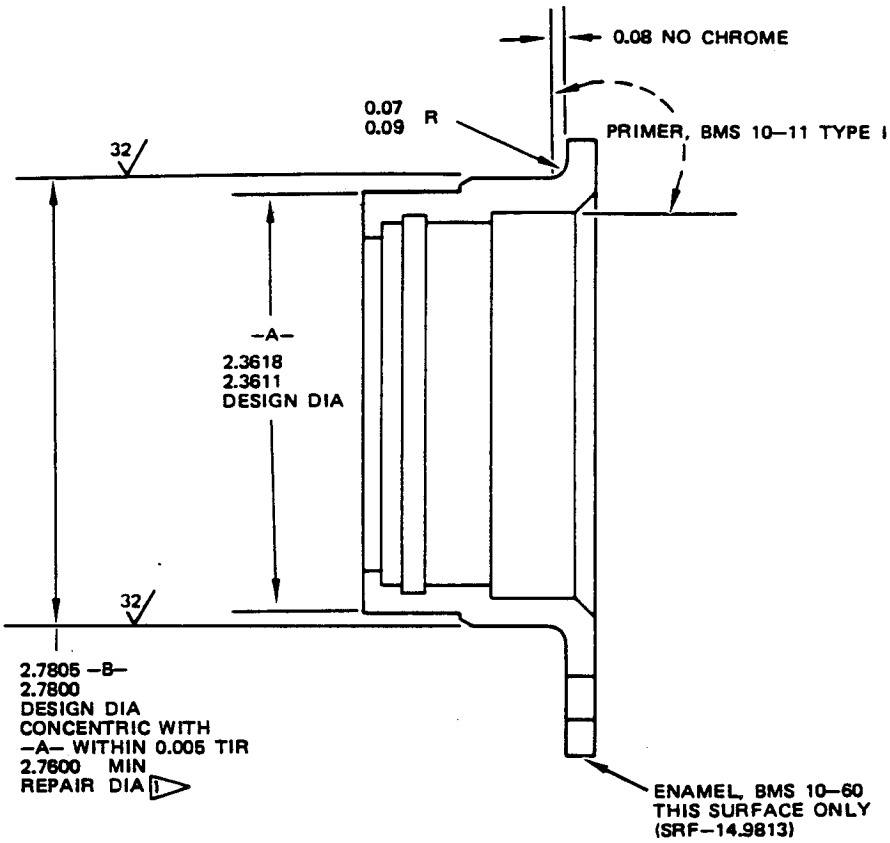

SUPPORT (136)

REFINISH

NO FINISH EXCEPT PRIMER AND ENAMEL AS SHOWN (SRF-12.205) (SRF-14.9813)

REPAIR

AS NOTED 1

SHOT PEEN (REF 20-10-03)
0.017-0.039 SHOT SIZE
0.010 A2 INTENSITY

BREAK SHARP EDGES 0.003-0.020 R

MATERIAL: (69-37669-3, -4) MOD H-11 STEEL (RC54-56)
(69-37669-5) 4340M STEEL (270-300 KSI)

1 BUILDUP WITH CHROME PLATE (REF 20-42-03) AND GRIND TO DESIGN DIM. OBSERVE MINIMUM PLATING RUNOUT AT FILLET RADIUS

Index No. Fig.1101	Part Number	Part Name	Material	Tensile Strength (ksi)	Stress Relief After Base Material Rework*	
					Temperature (°F)	Time (Hours)
9	65-76606-1, -2	Bolt	S.A.E. H-11**	275 to 300	900 to 950	2
	65-76604-1		S.A.E. 4340 modified		500 to 550	4
10	66-23905-1 69-60050-1	Spacer	S.A.E. H.11**	275 to 300	900 to 950	2
11	66-23907-1 69-60050-1	Pin				
12	66-37645-4, -5	Shaft				
13	69-37675-1	Cross				
86	66-23901-2	Pawl				
100	69-37614-2	Ratchet				
104	69-37650-1	Driver				
107	69-37623-2	Plate				
136	69-37669-3, -4, -5	Support				

* After stress relieving, air cool part at 65°F-75°F and magnetic particle examine per 20-20-01.

** AMS 6487 is the closest equivalent aeronautical material specification.

Stress Relief Data
Figure 406

ASSEMBLY

1. General

   A. Immerse all O-rings and internally installed parts in hydraulic fluid, Specification MIL-H-5606. These parts are installed wet.

   B. Apply primer, Specification BMS 10-11, type 1, on faying surfaces, from O-ring groove to outer edge, where required by reassembly procedures. Mate and install while primer is wet. Do not allow primer in O-ring grooves, on O-rings, or on sealing surfaces.

   C. Apply primer, Specification BMS 10-11, type 1, to shank and threads of bolts, where required by reassembly procedures, and install while primer is wet.

   D. Lockwire bolts and plugs, where required by reassembly procedures, using double wire twist method.

2. Assembly (Fig. 1101)

   A. Install and adjust gears (55, 58) as follows:

      (1) Install gear (58) and bearing (59) on gear (55). See Fig. 501, diagram No. 1, and determine thickness of shim (60).

      (2) See Fig. 501, diagram No. 2 and determine thickness of shim (61). Install gear (55), shims (60, 61), bearing (59), gear (58), washer (56) and nut (57) into housing (143). Tighten nut (57) to 40-60 lb-in., using Torque Wrench Adapter ST6105-2. Bend tangs of washer (56) to secure nut (57).

      (3) Install bearing (54) on gear (55). Apply primer to faying surfaces and install cover assembly (50) on housing (143). Install bolts (48) and washers (49). Tighten bolts (48) to 80-100 lb-in. Lockwire bolts, in pairs.

   B. Install and adjust gears (19 and 35) as follows:

      (1) Preassemble bearing (31), spacer (30) and bearing (29) on gear (19).

      (2) See Fig. 501, diagram No. 3, and determine thickness of shim (25).

      (3) Install gear (19), bearings (29, 31), spacer (30), shim (25), spacer (28) into housing (143). Install O-ring (23) on retainer (22) and install retainer (22), washers (21) and bolts (20) on housing (143). Tighten bolts (20) to 80-100 lb-in.

(4) Preassemble bearing (47), spacer (46) and bearing (45) on gear (35).

(5) Determine thickness of shim (41) per Fig 501, diagram No. 3.

(6) Install gear (35), bearings (45 47), spacer (46), shim (41), spacer (44) into housing (143). Install O-ring (39) on retainer (38) and install retainer (38), washers (37) and bolts (36) on housing (143). Tighten bolts (36) to 80-100 lb-in.

(7) Hold gear (55) securely by wedging between top of gear teeth and housing (143), pushing gear (55) away from gear (58).

(8) Check that backlash between gears (19, 35) and gear (58) is 0.0008-0.0032 inch. If backlash is not within limits, adjust thickness of shims (25 or 41) accordingly.

(9) Remove bolts (20), washers (21) and retainer (22) from housing (143). Apply sealant BMS 5-95 to fill faying surface groove in retainer (22) install seal (24) in retainer (22).

(10) Install backup rings (27) and O-ring (26) on gear (19). Apply primer on faying surfaces and mate retainer (22) to housing (143). Apply primer to bolts (20) and washers (21). Tighten bolts (20) to 80-100 lb-in. Lockwire bolts (20) in pairs.

(11) Remove bolts (36), washers (37) and retainer (38) from housing (143). Apply sealant BMS 5-95 to fill faying surface groove in retainer (38) and install seal (40) in retainer (38).

(12) Install backup rings (43) and O-ring (42) on gear (35). Apply primer on faying surfaces and mate retainer (38) to housing (143). Apply primer on bolts and install bolts (36) and washer (37). Tighten bolts (36) to 80-100 lb-in. Lockwire bolts (36) in pairs.

C. Install coupling (16), washer (18) and nut (17) on gear (19). Hold coupling (16) with wrench F71228, and tighten nut (17) to 160-190 lb-in.

D. Install coupling (32), washer (34) and nut (33) on gear (35). Hold coupling (32) with wrench F71228, and tighten nut (33) to 160-190 lb-in.

E. Apply sealant BMS 5-95, to fill faying surface groove in support (136) and install seal (141) in support (136).

F. Install O-ring (138) in housing (143). Coat faying surfaces of support (136) and bearing (139) with a light film of MIL-G-21164 grease. Install spacer (140) and bearing (139) into support (136).

G. Install screws (134) and O-rings (137) into housing (143). Carefully install support (136) and preassembled items (139 thru 141) into housing. Install retainer (135).

H. Install washers (133) and nuts (132) on screws (134). Tighten nuts (132) to a torque range of 50 to 70 pound-inches.

I. Install and adjust gear (128) as follows:

(1) See figure 501, diagram No. 4, and determine thickness of shim (127).

(2) Install bearings (130 and 131) on gear (128).

(3) Install preassembled gear (128), shim (127), support (111), bolts (124), washers (123) and nuts (122) in housing (143). Tighten nuts (122) to a torque range of 180 to 250 pound-inches. Use temporary spacers, approximately same thickness as lugs of housing (113), or use temporary bolts.

(4) Hold gear (55), to prevent any motion, by applying a locking torque to coupling (16 or 32). Measure and record backlash of gears (55) and (128). See figure 601 for procedure and for backlash limits.

NOTE: If backlash is not within limits, adjust thickness of shim (127) accordingly.

(5) Remove nuts (122), washers (123), bolts (124), support (111), shim (127) and gear (128).

(6) Insert short splined end of coupling (112) into internally splined end of gear (128). Do not allow coupling (112) to cover ring groove on gear (128).

(7) Install ring (129) into groove of gear (128) and simultaneously push coupling (112) into position. Make sure that ring (129) engages groove of coupling (112).

(8) Position preassembled gear (128), coupling (112) and ring (129) in housing (143).

(9) Install shim (127) and O-rings (125 and 126) on support (111). Apply primer to mating surfaces and mate support (111) to housing (143).

J. Assemble and install torque brake assembly (108) as follows:

(1) Align ends of springs in spring set (119) approximately 180 degrees apart.

NOTE: Spring set consists of two matched springs coiled together.

(2) Deleted.

(3) Place spring set (119) into Spring Pack Assembly Jig, ST6107 (Fig. 502).

NOTE: Install rolled shim between OD of spring set and ID of jig, if necessary, to maintain concentricity of spring set when springs are expanded.

(4) Check that top ends of coil are in line with the two locking lugs on jig before applying torque to springs. Insert Torque Bar, PT49001 into coil ends (Fig. 502) and wind spring ends until they are past the locking lugs on top of jig.

(5) Maintain pressure on torque bar. Insert an allen wrench into lockscrew holding locking lug. Push lugs inward, in position to prevent springs from unwinding. Lock set screws to prevent lugs from retracting (Fig. 502).

(6) Remove circular portion of assembly jig from its base. Invert unit and reinstall firmly on base. Use torque bar to align locking lugs into spring ends on bottom of spring set. Lock lugs in place by tightening set screws.

(7) Wind springs about thirty degrees further by rotating takeup screws in spring pack jig. This will expand spring set so that sleeves (116 and 118) can be inserted.

(8) Coat all surfaces of sleeve (118) with a light film of hydraulic fluid, MIL-H-5606, and assemble into expanded spring pack.

(9) Remove circular portion of assembly jig from its base. Reinstall this section onto base so that sleeve (118) is on bottom. Slip a wood block between sleeve (118) and base to prevent sleeve from dropping out.

(10) Coat sleeve (116) with hydraulic fluid, MIL-H-5606 and insert into spring pack. Make sure sleeve is fully inserted and internal lugs align with sleeve (118). Loosen locking lugs on assembly jig and press sleeve (116) further into spring set. Slide locking lugs inward and secure flats on sleeve (116).

(11) Remove circular portion of assembly jig from base. Apply a light film of hydraulic fluid, MIL-H-5606 to adapter (110).

(12) Insert adapter (110) into spring pack with internal splines pointing outward. Ears of adapter (110) must mate with lands of sleeve (118) (Fig. 503).

(13) Slowly unwind spring set by rotating assembly jig to relieve spring expansion. Spring friction will prevent sleeves and adapter from dropping out.

(14) Back off locking lugs on top side of assembly jig. Use thumbs to remove spring pack by applying pressure on flange of sleeve (116). Use care to prevent misalignment of internal components.

NOTE: A light plastic drift may be used to force pack from jig. Do not permit spring pack to drop.

(15) Place assembled parts in arbor press. Protect flanged faces of sleeves (116 and 118) and apply an end load of 75-100 pounds to stack springs tight.

(16) Install rings (115) over spring set and press down to remove clearance and end play.

(17) Measure stacked height of assembled parts. Select shims (117) to provide dimension of 4.137-4.149 inches between outer faces of rings (115), after installation. Remove end rings (115) and install shims as shown in Fig. 504. Shims used on same end of assembly are to be identical at two places 180 degrees opposite. Use the least quantity of shims required by selecting the larger sizes of shims. The dimension may be met without requiring shims, or with shims at one end only. When more than one shim is required, use same thickness at each end within 0.01 inch. Two shims may be stacked together to increase range. Maximum permissible shimming is 0.09 inch at each end (one 0.04-inch shim and one 0.05-inch shim). Trim ends of stacked shims as required so they do not protrude beyond spring O.D.

(18) Position spring pack assembly in housing (113) with sleeve (116) toward large end of housing (113).

(19) Install rings (115) on spring pack assembly (114).

(20) Insert shaft (12) through housing (143), gear (128), and support (111).

(21) Position torque brake assembly on shaft (12). Apply primer to faying surfaces and mate housing (113) to support (111).

(22) Install bolts (124), washers (123) and nuts (122). Tighten nuts (122) to 180-250 lb-in.

(23) Install O-rings (120, 121) on support (109). Apply primer to faying surfaces and mate support (109) to housing (113).

K. Assemble universal joint assembly (5).

(1) Coat shank of bolt (9) and threads of nut (7) with MIL-C-11796, corrosion preventive compound. Position yoke (14) on cross (13) and install pin (11), bolt (9), spacer (10) and nut (7) as shown on Fig. 1101. Tighten nut (7) as follows:

(a) Tighten nut to 170-200 pound-inches, when it is used with bolt P/N 66-23909-1, -2.

(b) Deleted.

(c) The requirements for nut (7) installation, when it is used with bolt P/N 65-76604-1, are as follows:

1) The self-locking mechanism of the nut must develop a torque between 25 and 100 pound-inches, at room temperature with no axial load on the nut and the thread fully engaged. The full chamfer of the bolt thread must protrude beyond the locking mechanism of the nut.

2) Torque nut to 170-200 pound-inches.

L. Determine proper thickness of shim (94).

(1) Install plate (107), bearing (105), driver (104), bearing (103), washer (102), bearing (101), ratchet (100), retainer (99), bearing (98), shim (94), and retainer (95) on shaft (12).

(2) Install bearing (93) on race (91), and install race (91), new washer (89) and nut (90) on shaft (12). Tighten nut (90) to 50-70 lb-in., using Wrench Adapter ST6105-1.

(3) See Fig. 501, Diagram No. 5, and measure axial free play as indicated. Adjust shim (94), if necessary.

(4) Remove previously installed parts from output shaft and insert universal joint assembly (5) through gear housing and torque brake assembly.

(5) Install support (106) on output shaft, making sure support engages adapter (110).

CAUTION: DO NOT USE PREVIOUSLY INSTALLED WASHER (89) OR FAILURE OF TANKS AND LOSS OF NUT RETENTION MAY OCCUR.

(6) Install parts removed in step (4). Tighten nut (90) to 200-240 lb-in and bend tangs of washer (89) to secure nut (90).

M. Assemble and install housing (68) as follows:

(1) See Fig. 501, diagram No. 6, and determine thickness of shim (97). Position shim (97) in housing (68) and mate housing (68) to support (109). Shim (97, 66-24730-2) must have solid face next to bearing (98).

(2) Remove housing (68).

(3) Install O-rings (83) on pins (82).

(4) Install pawl assemblies (84), washers (88), and pins (82) on housing (68).

(5) Apply primer on faying surfaces and mate retainers (81) to housing (68).

(6) Apply primer to bolts and install bolts (79) and washers (80). Lockwire bolts.

(7) See Fig. 501, diagram No. 6, and determine thickness of shim (97). Position shim (97) in housing (68) .

(8) Apply primer to faying surfaces and mate housing (68) to support (109).

(9) Apply primer to bolts and install bolts (77, 76, 75, 73), washer (72), and nuts (78, 74, 71).

(10) Tighten bolts (77, 76) to 225-275 lb-in.

(11) Tighten bolt (75) to a torque range of 450 to 550 pound-inches.

(12) Tighten nut (71) to a torque range of 300 to 500 pound-inches.

(13) Install O-rings (65) on retainers (64).

(14) Insert springs (66) into housing (68).

(15) Apply primer to faying surfaces and mate retainers (64) to housing (68).

(16) Apply primer to bolts and install bolts (62) and washers (63).

(17) Install O-rings (4) and plugs (3). On ratchet end, lockwire bolts (62) and plug (3) together. On universal joint end, lockwire plug (3) to housing (143).

N. Service Transmission Assembly

(1) Position assembly with yoke end of shaft (12) 3 degrees below horizontal plane. Remove plug (I) on upper filler port.

(2) Fill assembly through upper filler port, with hydraulic fluid, Specification MIL-H-5606, until fluid is at filler port level.

(3) Install plug (I). Lockwire plug (I) to housing (143).

(4) Repair or touch-up any damaged or omitted finished surface.

(5) Apply Glyptal across exposed bolt threads and nuts, and to lockwire ends fasteners and plugs, as applicable.

3. Materials

A. Hydraulic Fluid -- Specification MIL-H-5606

B. Primer -- Specification BMS 10-11, type 1

C. Grease -- Specification MIL-G-21164

D. Sealant -- BMS 5-95 (Ref 20-60-04), replaces No. 2 Permatex

E. Paint -- Glyptal (General Electric Co., Insulating Materials Department, Downey, California)

F. Corrosion Preventive Compound -- Specification MIL-C-11796, class 3

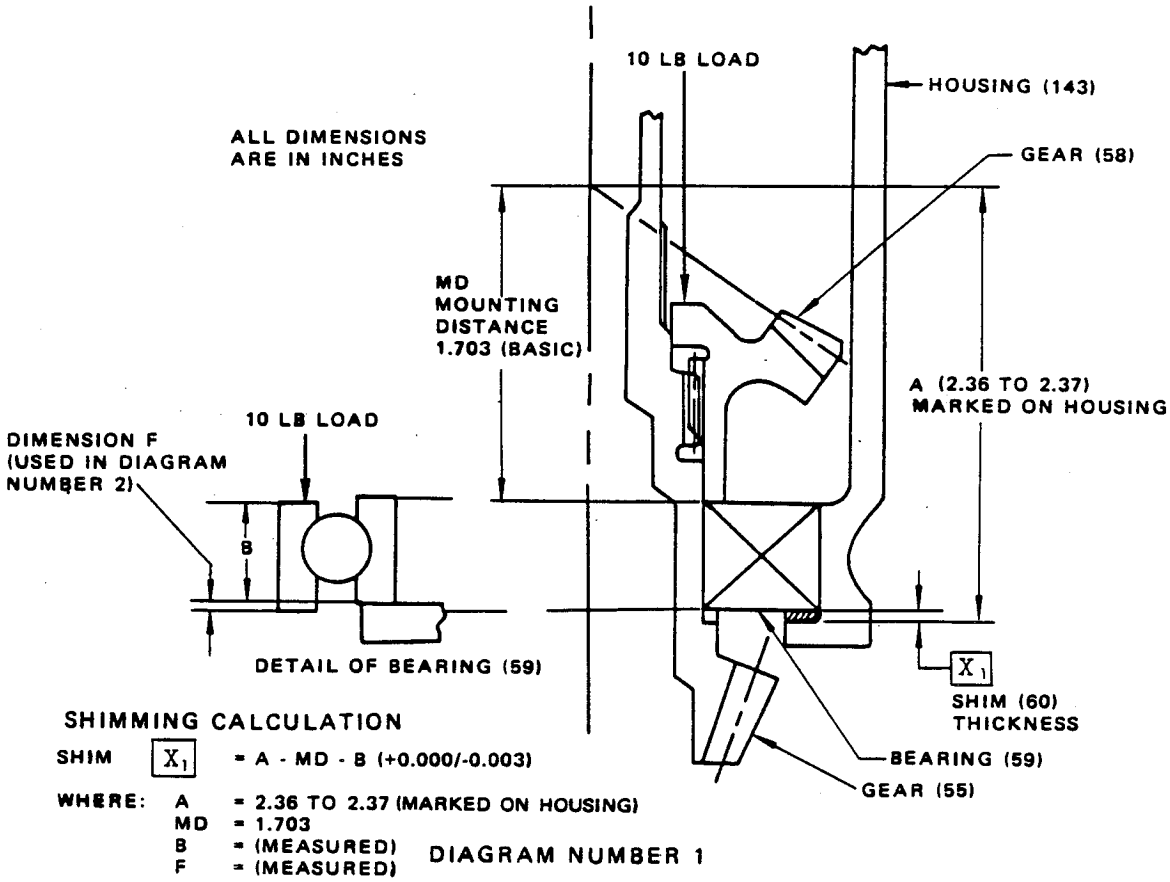
10 LB LOAD
HOUSING (143)
ALL DIMENSIONS ARE IN INCHES
GEAR (58)
MD MOUNTING DISTANCE 1.703 (BASIC)
A (2.36 TO 2.37) MARKED ON HOUSING
10 LB LOAD
DIMENSION F (USED IN DIAGRAM NUMBER 2)
B
DETAIL OF BEARING (59)
X1
SHIM (60) THICKNESS
BEARING (59)
GEAR (55)
SHIMMING CALCULATION
SHIM X1 = A - MD - B (+0.000/-0.003)
WHERE: A = 2.36 TO 2.37 (MARKED ON HOUSING)
MD = 1.703
B = (MEASURED)
F = (MEASURED)
DIAGRAM NUMBER 1

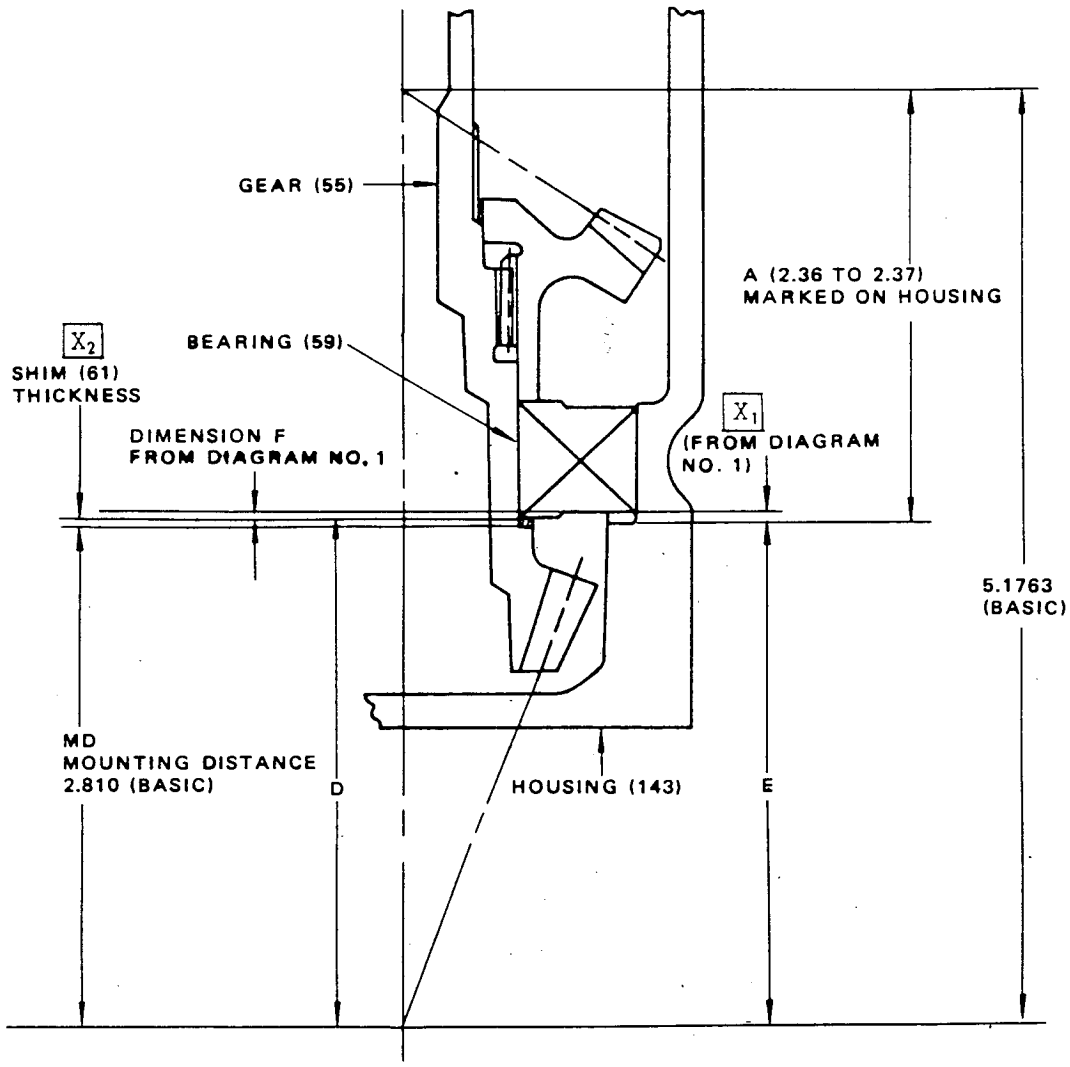

SHIMMING CALCULATION

ALL DIMENSIONS ARE IN INCHES

A = 2.36 TO 2.37 (MARKED ON HOUSING)
E = 5.1763 - A
D = E + X_1 - F
SHIM X_2 = D - MD
OR SHIM X_2 = 5.1763 - A + X_1 - F - MD (+0.000/-0.003)

DIAGRAM NUMBER 2

Shimming Diagrams
Figure 501(Sheet 2)

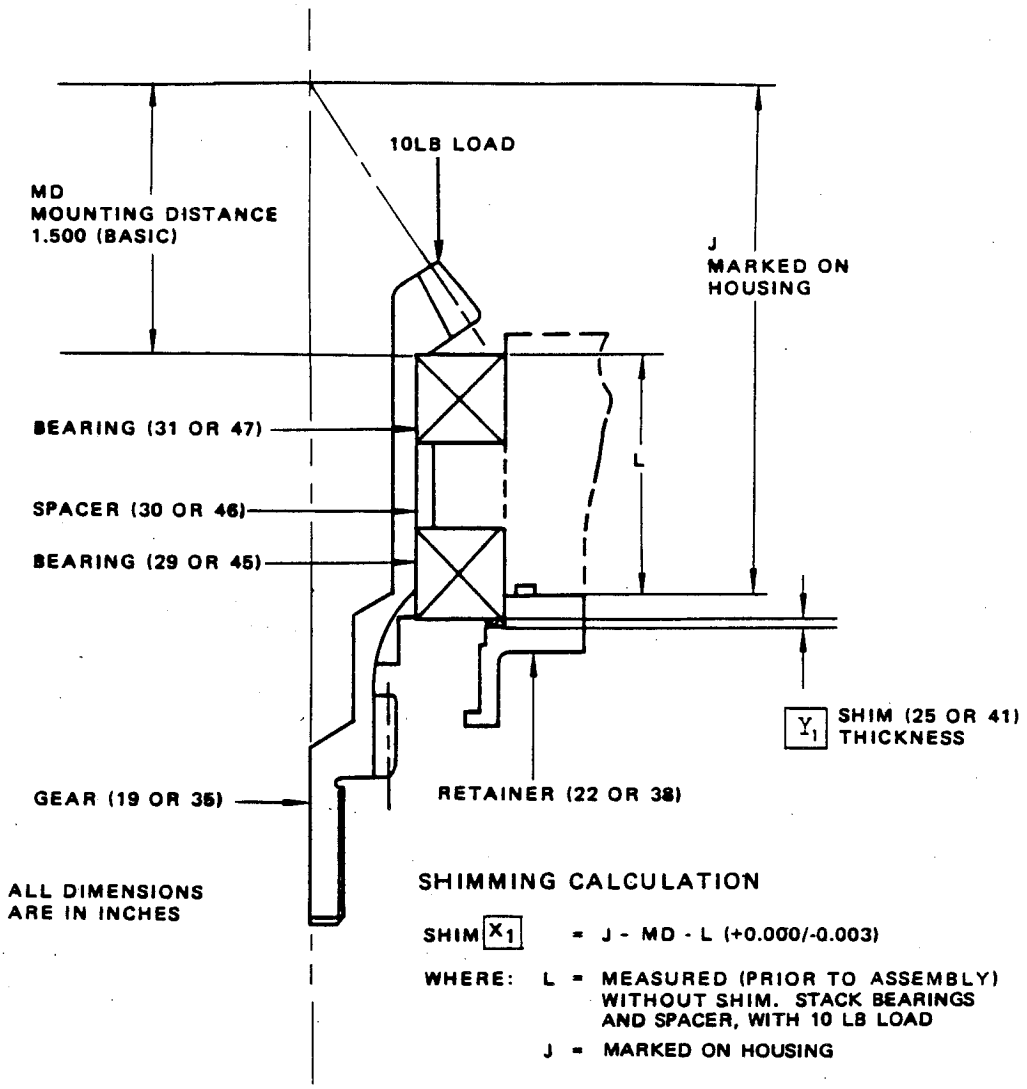

DIAGRAM NUMBER 3

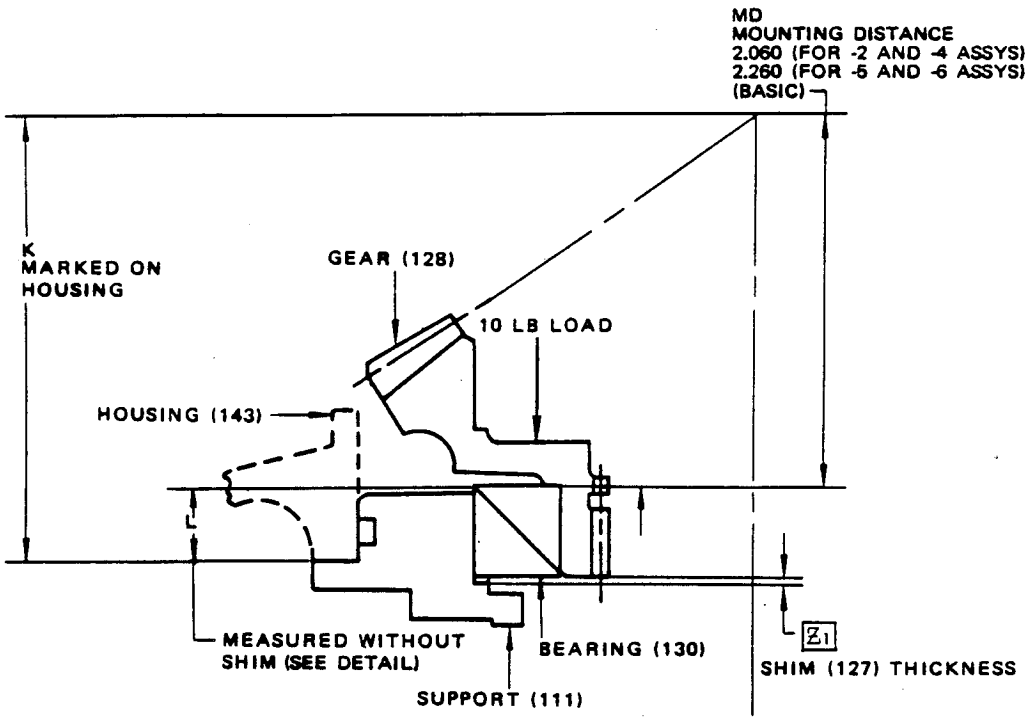

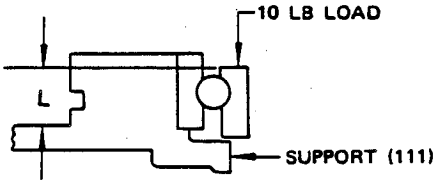

DETAIL OF BEARING (130)

SHIMMING CALCULATION

SHIM $\boxed{Z_1}$ = K - L - MD (+0.000/-0.003)

WHERE: L = MEASURED
K = MARKED ON HOUSING

ALL DIMENSIONS ARE IN INCHES

DIAGRAM NUMBER 4

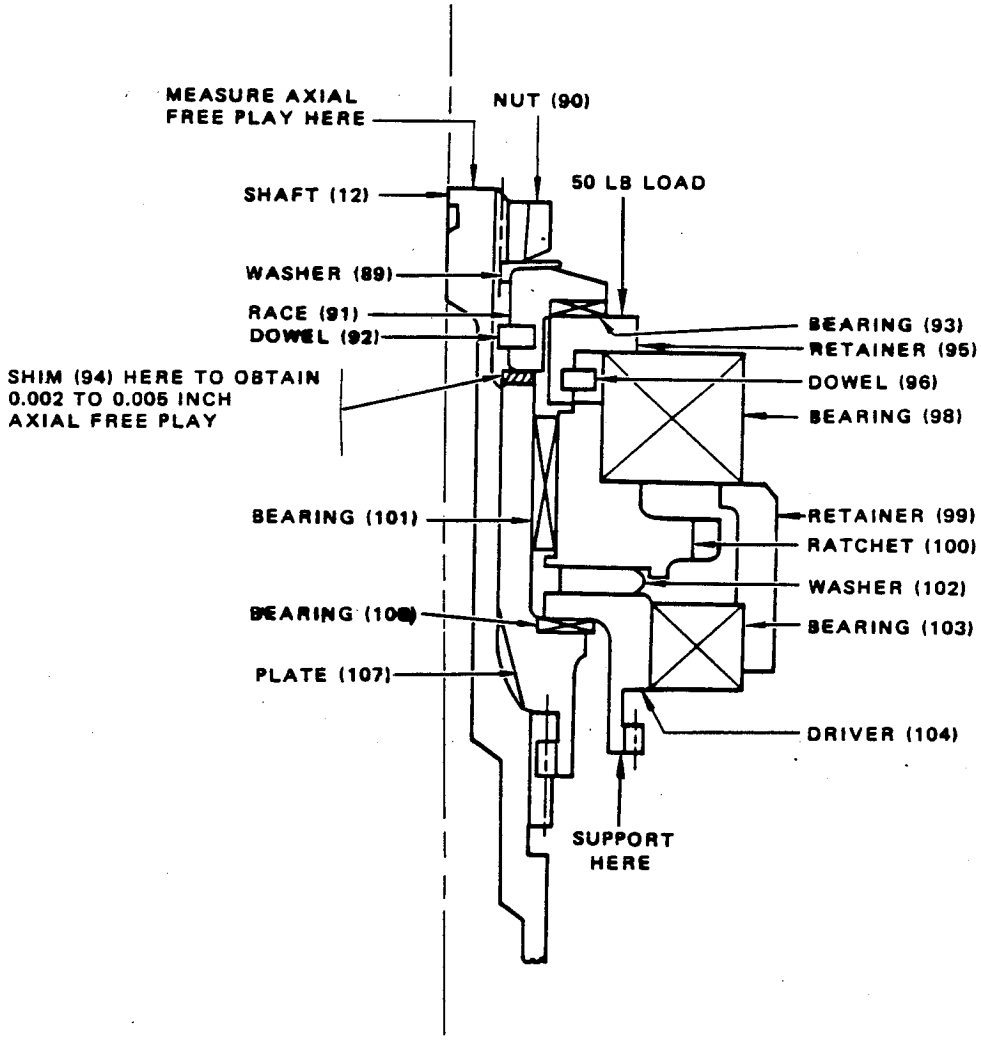

DIAGRAM NUMBER 5

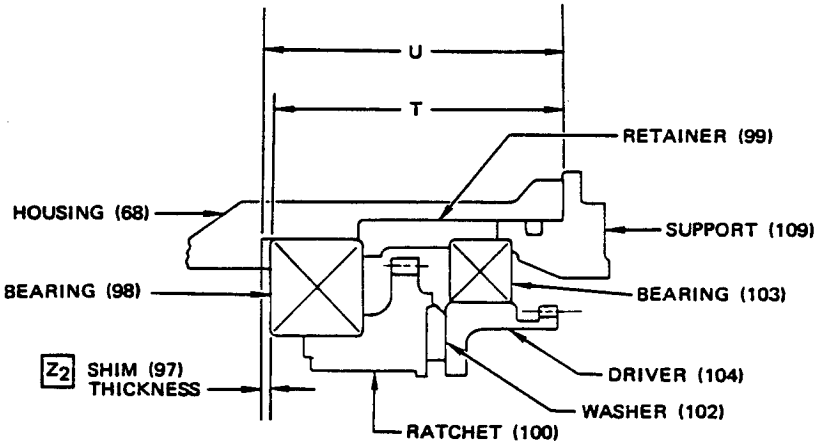

SHIMMING CALCULATION

SHIM Z2 = U - T (+0.003-0.000)

WHERE: U = MEASURED ON HOUSING (68)
T = MEASURED WITH PARTS STACKED AS SHOWN, WITHOUT HOUSING (68)

DIAGRAM NUMBER 6

Shimming Diagrams
Figure 501 (Sheet 6)

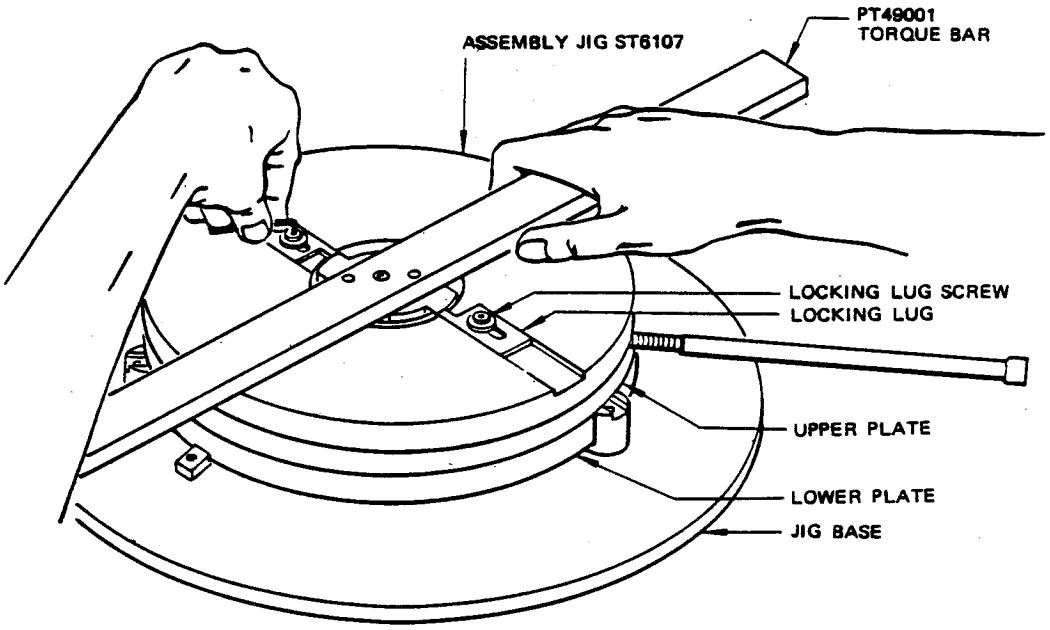

Spring Pack Assembly Jig, ST6107
Figure 502

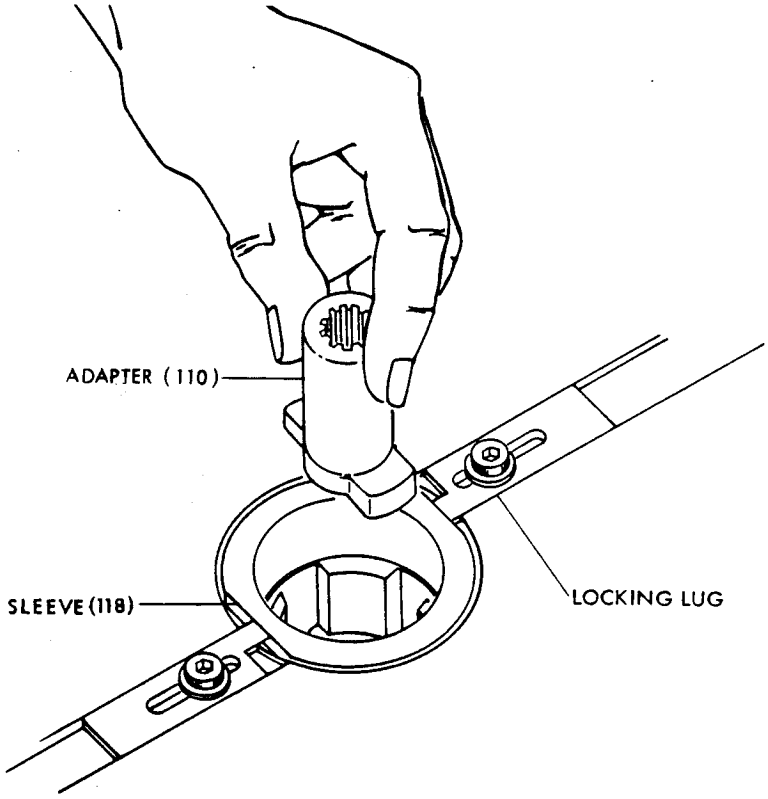

Spring Pack Buildup
Figure 503

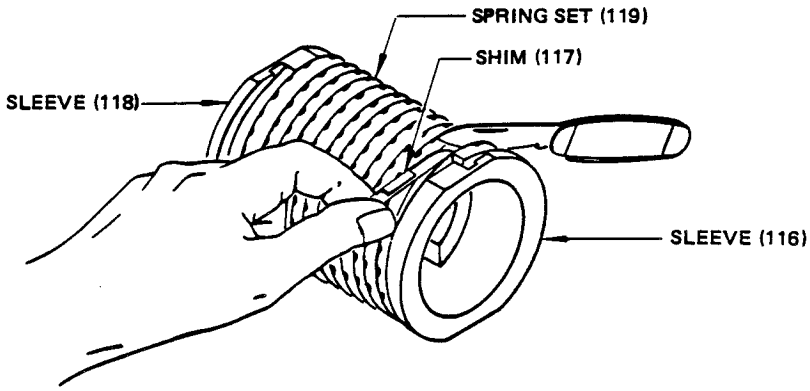

Spring Pack Shim Installation
Figure 504

FITS AND CLEARANCES

1. The fits and clearances table lists design dimensions and service wear limits for close tolerance parts of the assembly that are subject to wear or corrosion. Unless otherwise specified, parts should be returned to the design dimensions whenever rework is accomplished.

2. Clearances are given to aid assembly of the components. The values given in the Maximum Allowable Clearance column are the maximum permitted to ensure proper functioning of the unit. If assembled parts fail to meet this requirement, one or more of the parts must be rejected. Parts that are rejected should be reworked if within the rework limits given in the Repair procedure; if not within rework limits, the parts should be scrapped. It is recommended that the design clearances be used as the guiding assembly criteria when newly reworked parts are assembled.

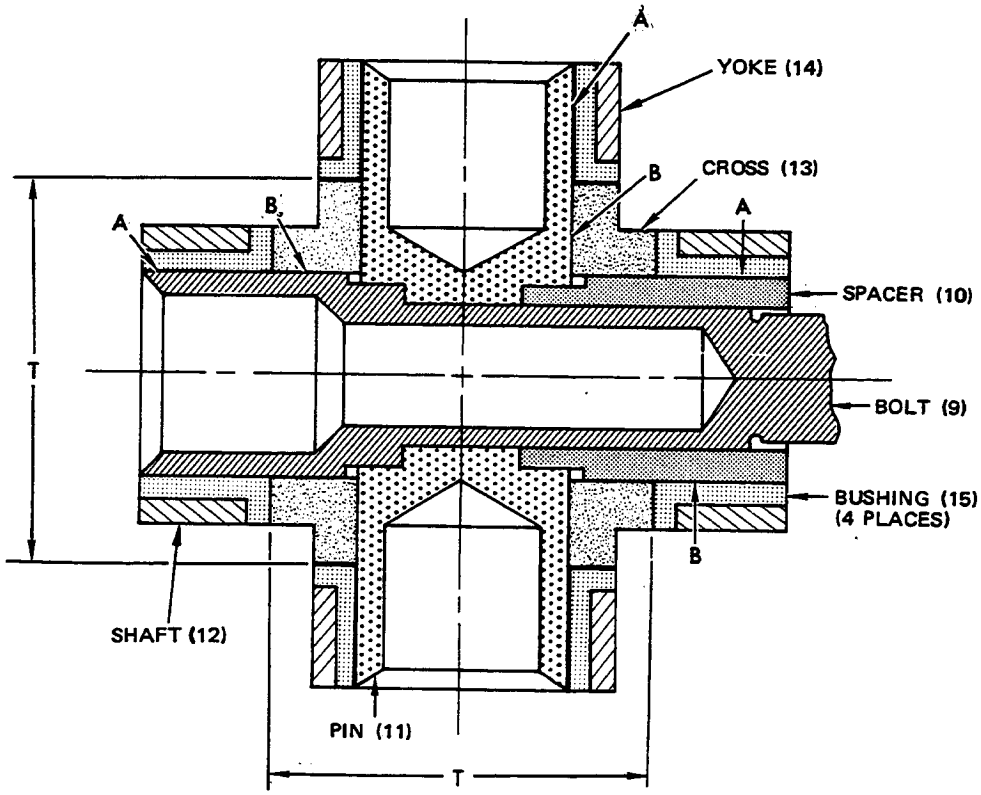

Fits and Clearances
Figure 601 (Sheet 1)

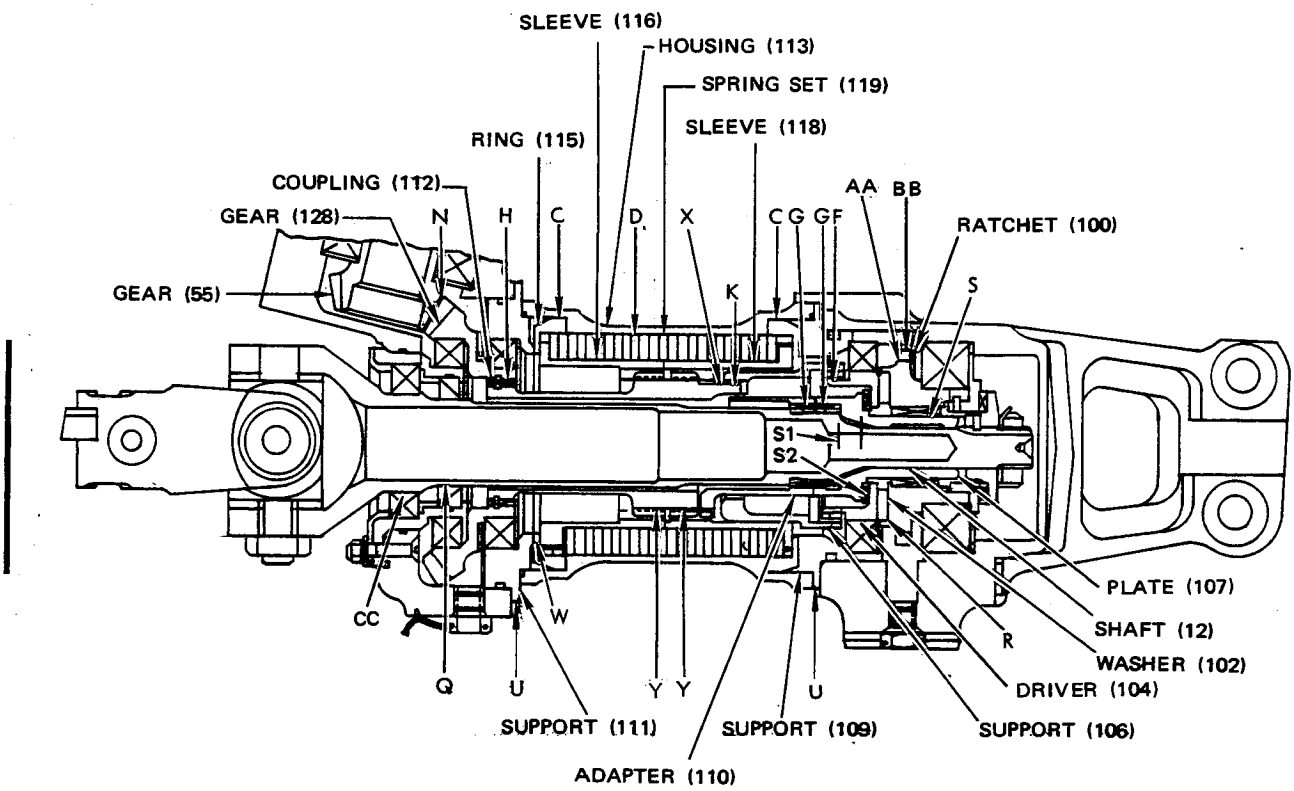

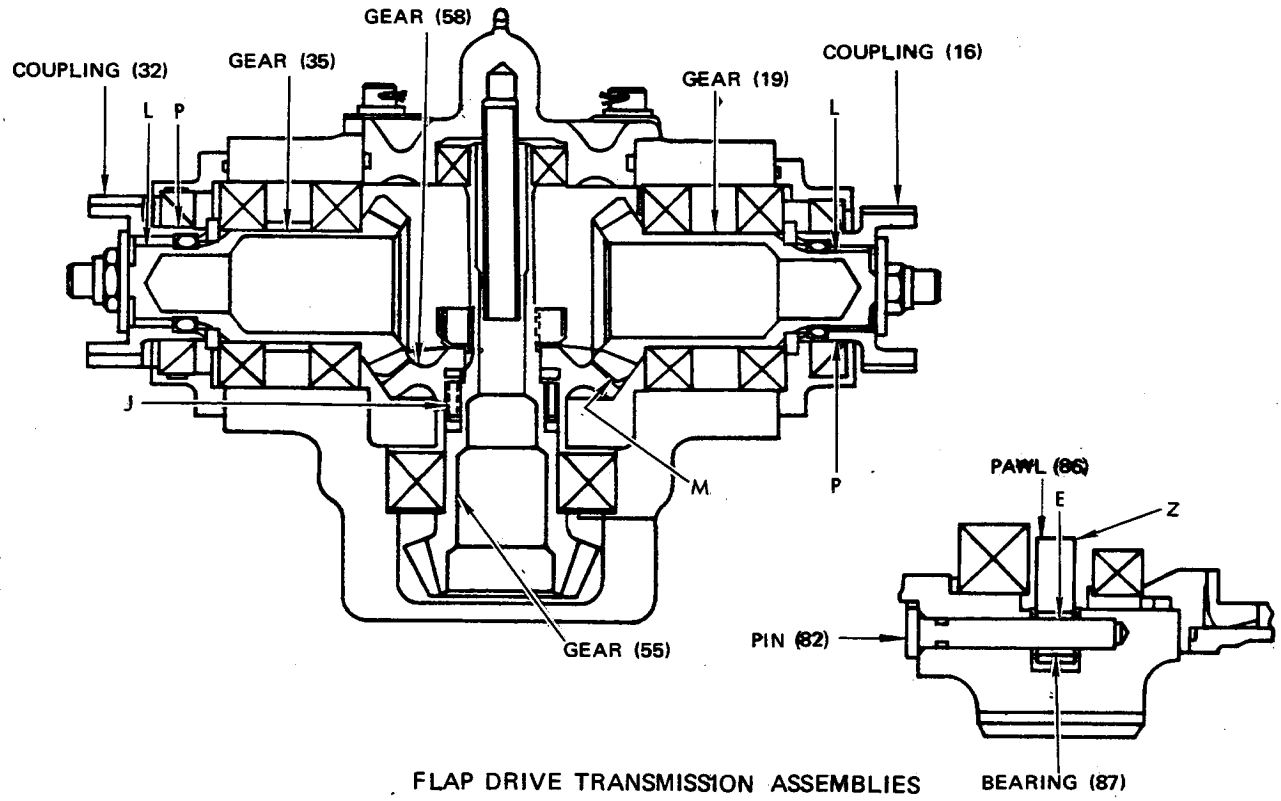

FLAP DRIVE TRANSMISSION ASSEMBLIES

Fits and Clearances
Figure 601 (Sheet 2)

Ref Letter Fig.601	Mating Item No. Fig.1101		Design Dimensions: Dimensions (inches) Min	Design Dimensions: Dimensions (inches) Max	Design Dimensions: Assembly Clearance (inch) Min	Design Dimensions: Assembly Clearance (inch) Max	Service Wear Limits: Dimension Limits (inches) Min	Service Wear Limits: Dimension Limits (inches) Max	Service Wear Limits: Maximum Allowable Clearance (inch)
A	ID	15 [4]	0.9990	1.0000	0.0010	0.0044		1.0060	0.0120
	OD	9,10,11	0.9953	0.9960			0.9943		
A	ID	15 [4]	1.0000	1.0040	0.0021	0.0084		1.0080	0.0120
	OD	9,10,11	0.9953	0.9960			0.9943		
B [1]	ID	13	0.9962	0.9975	0.0002	0.0022		0.9990	0.0050
	OD	9,10,11	0.9953	0.9960			0.9940		
C	ID	113	4.000	4.001	0.004	0.006		4.002	0.008
	OD	115	3.995	3.996			3.994		
D	ID	113	3.5230	3.5235	0.0810	0.0825		3.5240	0 0835
	OD	119	3.4410	3.4420			3.4405		
E	ID	87	0.3125	0.3130	0.0005	0.0020		0.3130	0.0030
	OD	82	0.3110	0.3120			0.3100		
F	[1]	104			0.0013	0.0067			0.0078
		106							
G	[2]	107,110			0.0015	0.0071			0.0090
		12							
H	[3]	128			0.0015	0.0075			0.0090
		112							
J	[4]	58			0.0000	0.0137			0.0180
		55							
K	[5]	106	0.602	0.605	0.003	0.009		0.610	0.020
		112	0.596	0.599			0.590		

			Design Dimensions				Service Wear Limits		
Ref Letter Fig.601	Mating Item No. Fig.1101		Dimensions (inches)		Assembly Clearance (inch)		Dimension Limits (inches)		Maximum Allowable Clearance (inch)
			Min	Max	Min	Max	Min	Max	
L	6	16,19 32,35			0.0000	0.0054			0.0070
M	7	19,35 58			0.0008	0.0032			0.0047
N	8	128 55			0.0008	0.0032			0.0050
P	OD	16,32	1.153	1.159			1.153		
Q	OD	12 21	1.376	1.378			1.372		
R	11	102	0.154	0.158			0.135		
S	OD	107	0.9995	1.0000			0.9992		
S1	12	107	0.425	0.430			0.423		
S2	12	104	0.135	0.140			0.132		
T 14	12	13	1.8665	1.8705			1.8630		
T 15	12	13	1.8685	1.8705			1.8650		
U	12	111,109	0.208	0.211			0.201		
W	12	115	0.090	0.092			0.088		
X	9	110,112	0.700	0.704			0.692		
Y	10	116,118	0.958	0.962			0.950		
Z	16	86	0.05	0.07				0.075	
AA	17	100	0.190	0.210				0.225	
BB	18	100	3.085	3.105			3.075		
CC	OD	12 22	1.561	1.563			1.559		

Fits and Clearances
Figure 601 (Sheet 4)

1 Spline backlash, measured at 1.96-1.95-inch diameter of support (106) while driver (104) is fixed.

2 Spline backlashes, measured at 1.1875-inch pitch diameter of spline on shaft (12) while plate (107) or adapter (110) is fixed.

3 Spline backlash, measured at 1.8750-inch pitch diameter of spline on gear (128), while coupling (112) is fixed.

4 Spline backlash, measured at 2.7000-inch pitch diameter of gear (58), while gear (55) is fixed.

5 Backlash, measured at 1.62-inch inside diameter of slots in support (106) or of lugs on coupling (112).

6 Spline backlash, measured at 0.8750-inch pitch diameter of internal spline on coupling (16 or 32), while mating gear (19 or 35) is fixed.

7 Gear backlash, measured at 0.8750-inch pitch diameter of spline on gear (19 or 35), prior to disassembly. Backlash beyond service limit requires check of wear of each gear in the pair. Lock output shaft and remove all other backlash in gearbox by applying 20 lb-in. torque to bevel gear not being checked.

8 Gear backlash, measured at 1.8750-inch pitch diameter of spline of gear (128) prior to complete disassembly. Backlash beyond service limit requires check of wear of each gear in the pair. Partially disassemble gearbox to permit fixing gear (55) and expose spline on gear (128).

9 Chordal tooth thickness measured at pitch diameter of 2.125 inches.

10 Circular tooth thickness measured at pitch diameter of 2.125 inches.

11 Thickness

12 Width

13 Used for universal joint assemblies 69-37652-6, -8, -11, -13 only

14 Used for 69-37675-1

15 Used for 65-76638-1

16 Tip radii of pawls (86)

17 Height of ratchet (100) teeth

18 OD of ratchet (100) teeth

19 DBAF-16-083 and 90585

20 69-52475-1

21 69-37646-4, -5; 65-80933-1

22 65-80933-2, 69-37646-6

Fits and Clearances
Figure 601 (Sheet 5)

TESTING

1. Test Equipment

NOTE: Equivalent substitutes may be used.

A. Compressed air source, controlled at 0 to 15 psi

B. Air valve adapter

C. ST 6396: Transmission Tester (Curtiss Wright Corp. Caldwell Facility, 300 Fairfield Rd., Caldwell, New Jersey 07006)

D. X-Y Recorder:

(1) Model HP7090A (X-Y Recorder, Hewlett Packard Co., 3000 Hanover St., Palo Alto, California 94304 (Replaces HP7004B)

(2) Model 6423 DIN A3 (X-Y Recorder, Soltec Corp., Sol Vista Park, 12977\Arroyo St., San Fernando, California 91340-1597). Replaces XY530T, Esterline Corporation, Esterline-Angus Division, P.O. Box 24000, 1201 Main St., Indianapolis, Indiana 46224

E. Model 870 Signal Conditioner (Daytronic Corp., 2589 Corporate Drive Place, Miamisburg, Ohio 45342) (2 required). No longer available, see G. below

F. Model 801 Adapter (Daytronic Corp., 2589 Corporate Drive Place, Miamisburg, Ohio 45342). No longer available, see G. below

G. Model 3170 or 3270 Strain Gage Conditioner (Daytronic Corp., 2589 Corporate Drive Place, Miamisburg, Ohio 45342). Replaces conditioner and adapter listed in E. and F.

2. Preparation for Test

A. Ensure that unit has been serviced with hydraulic fluid.

B. Install air valve adapter in upper filler port.

C. Turn over couplings, by hand, in both directions. Gears and bearings must be free running without evidence of binding in any position.

D. With output and universal shafts free, torque required to rotate input shaft in both directions shall not exceed 12 lb-in.

3. Functional Test (Fig. 1101)

A. Connect air hose to air valve adapter in upper filler port, and pressurize with filtered air at 14.5-15.5 psi for minimum of 3 minutes. There shall be no leakage. Remove adapter and install plug (1) and O-ring (2) in upper filler port. Lockwire plug (1). Apply Glyptal to lockwire ends.

B. With universal shaft locked, apply 45-55 lb-in. torque to input shaft in clockwise direction. Mark position of input shaft. Apply same torque in counterclockwise direction. Input rotational backlash shall not exceed 20 degrees.

C. Alternately apply 45-55-lb tension and compression load to universal shaft, and check that shaft axial play is 0.004-0.015 inch.

D. With output and universal shafts free to rotate, check that input torque required to rotate universal shaft in both clockwise and counterclockwise directions does not exceed 12 lb-in.

E. Apply 50-lb compression load to universal shaft and rotate shaft counterclockwise. A ratcheting sound shall be audible.

F. Mount assembly in test fixture (Fig. 701).

G. Connect torque transducers to X-Y recorder.

H. Connect transmission input shaft to calibrated input torque transducer, and transmission output shaft to calibrated output transducer.

I. Check that X-Y recorder is zeroed before any torque is applied to transmission.

J. Draw vertical lines on X-Y recorder paper, at minimum lockout input torque (230 lb-in.) and at input torque at maximum output (2540,lb-in.).

K. Install manual input torque arm.

CAUTION: DO NOT EXCEED MAXIMUM INPUT TORQUE (FIG 703) OR DAMAGE TO UNIT MAY OCCUR.

L. Slowly turn the manual input torque arm in the clockwise direction until the input torque is at the maximum limit (Fig. 703).

M. Make sure that the output torque at minimum lockout is not less than 660 lb-in. with a minimum input torque of 230 lb-in.

N. Make sure that the output torque is not more than 723 lb-in. with a maximum input torque of 2540 lb-in.

O. Repeat steps L thru N with counterclockwise input torque.

BOEING PROPRIETARY - Copyright © - Unpublished Work - See title page for details.

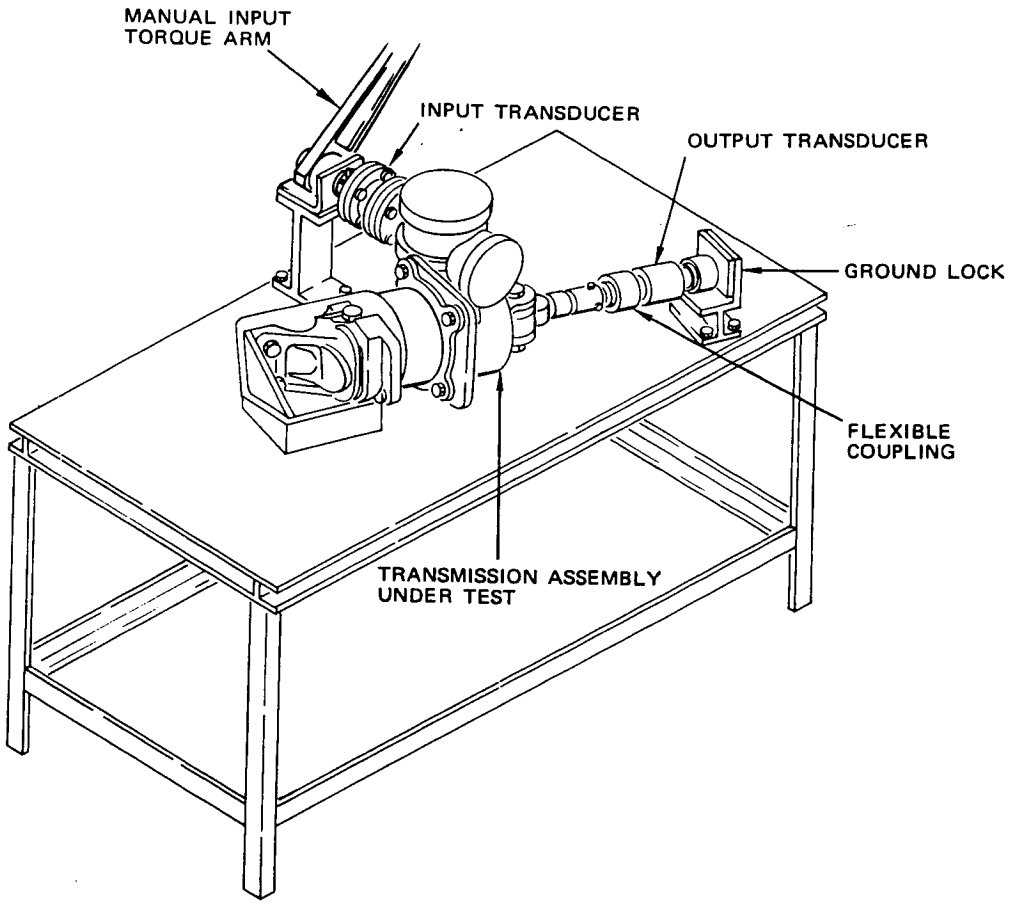

Test Fixture
Figure 701

Deleted
Figure 702

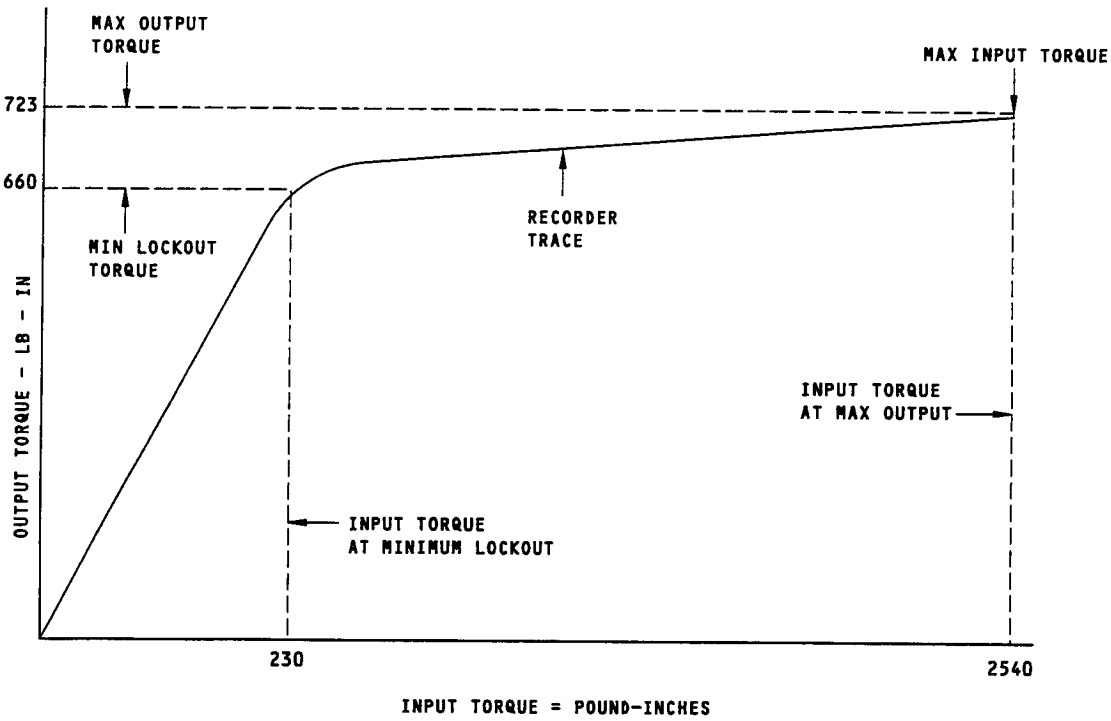

F21203

Torque Brake Test
Figure 703

TROUBLE SHOOTING

1. Trouble shooting is keyed to individual steps of the test procedure. ?eferenced paragraphs show test procedure in which noted trouble would appear.

Trouble	Possible Cause	Correction
A. External leakage, paragraph 3.A.	Defective O-rings or seals	Replace O-rings or seals
B. Binding or rough movement, paragraph 2.C.	Improperly installed or defective components	Correct condition
C. Excessive backlash, paragraph 3.B.	Inadequate shims or excessively worn components	Replace shims or other component
D. Lockout occurs outside of minimum or maximum limits, paragraph 3.M., N.	Defective torque brake assembly	Replace or repair torque brake assembly

STORAGE INSTRUCTIONS

1. Wrap assembly in vapor-barrier paper and tape securely.

2. Tag assembly with test date and cure date of rubber parts.

3. For further information, refer to Temporary Protective Coatings, Subject 20-44-02, and to Protection, Storage, and Handling of Airplane Components, Subject 20-70-01.

SPECIAL TOOLS, FIXTURES, AND EQUIPMENT

NOTE: Equivalent substitutions may be used for listed items. Refer to Testing for special tools and equipment required for component test.

1. F71228 -- Splined Coupling Wrench (Boeing)
2. ST6107 -- Spring Pack Assembly Jig (Curtiss-Wright Corp. Caldwell Facility, 300 Fairfield Rd., Caldwell, New Jersey 07006)
3. PT49001 -- Torque Bar (Curtiss-Wright Corp. Caldwell Facility, 300 Fairfield Rd., Caldwell, New Jersey 07006)
4. ST6105-2 -- Torque Wrench Adapter (Curtiss-Wright Corp. Caldwell Facility, 300 Fairield Rd., Caldwell, New Jersey 07006)
5. ST6105-1 -- Torque Wrench Adapter (Curtiss-Wright Corp. Caldwell Facility, 300 Fairfield Rd., Caldwell, New Jersey 07006)

ILLUSTRATED PARTS LIST

VENDORS

V09455	LEAR SIEGLER, INC., TRANSPORT DYNAMICS DIV., 3131 W. SEGERSTROM AVE., SANTA ANA, CALIFORNIA 92702
V21335	THE FAFNIR BEARING CO., DIVISION OF TEXTRON, INC., 37 BOOTH STREET, NEW BRITAIN, CONNECTICUT 06050
V38443	MARLIN ROCKWELL CO., DIVISION OF TRW, INC., 402 CHANDLER STREET, JAMESTOWN, NEW YORK 14701
V40920	MINIATURE BEARING DIV., MPB CORP., OPTICAL AVE., KEENE, NEW HAMPSHIRE 03431
V60380	THE TORRINGTON CO., 59 FIELD, TORRINGTON, CONNECTICUT 06790
V71791	CURTISS-WRIGHT CORP., CURTISS DIV., CALDWELL, NEW JERSEY 07006
V73680	GARLOCK, INC., PALMYRA, NEW YORK 14522
V80756	RAMSEY CORP., MANCHESTER AND WEIDMAN, ST. LOUIS, MISSOURI
V81376	SOUTHWEST PRODUCTS COMPANY, 1705 S. MOUNTAIN AVE., MONROVIA, CALIFORNIA 91016
V83259	PARKER-HANNIFIN CORP., SEAL GROUP, O-RING DIVISION, 2360 PALUMBO DR., LEXINGTON, KENTUCKY 40509

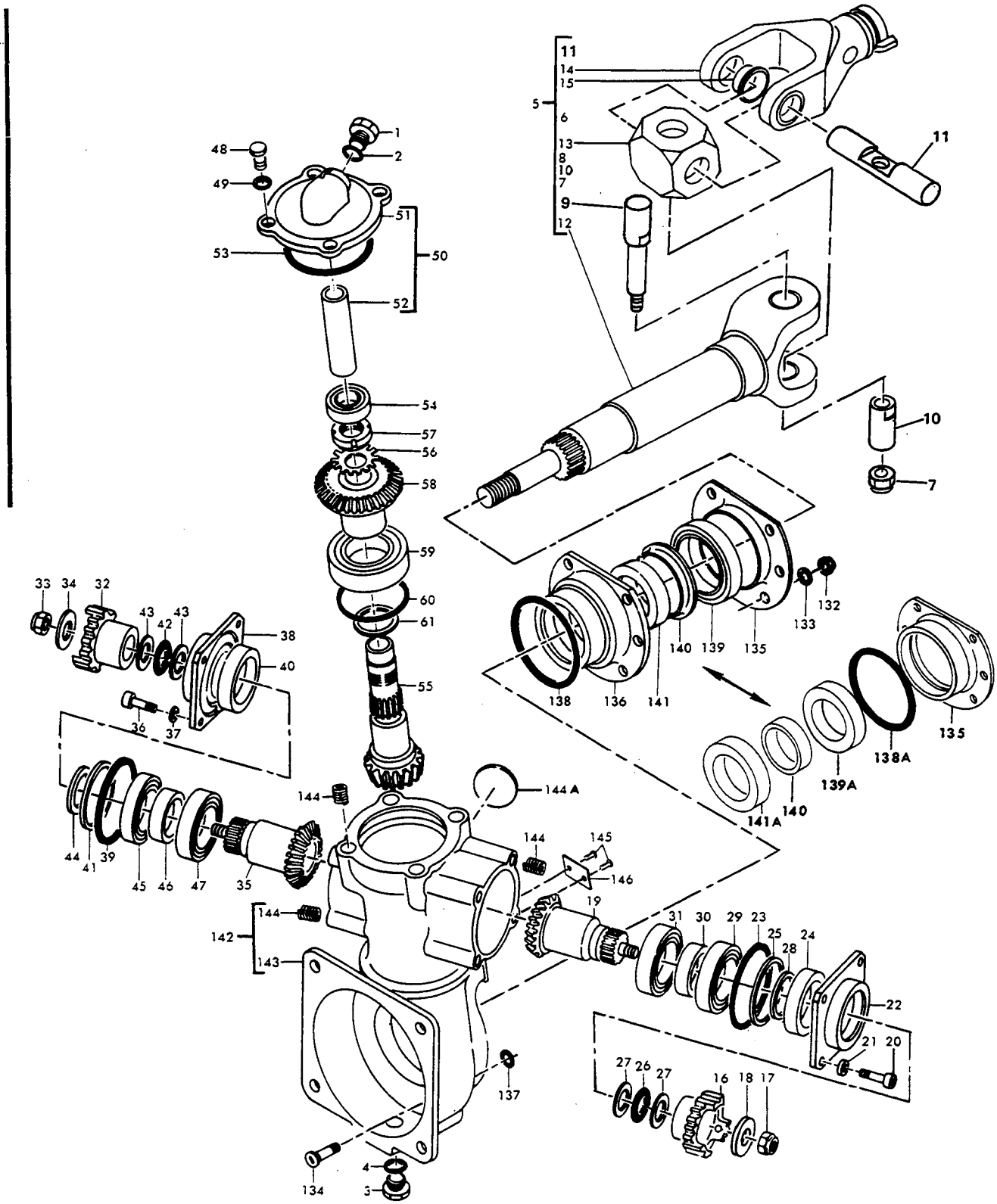

Trailing Edge Flap Drive Transmission Assemblies Nos. 2 and 7
Figure 1101 (Sheet 1)

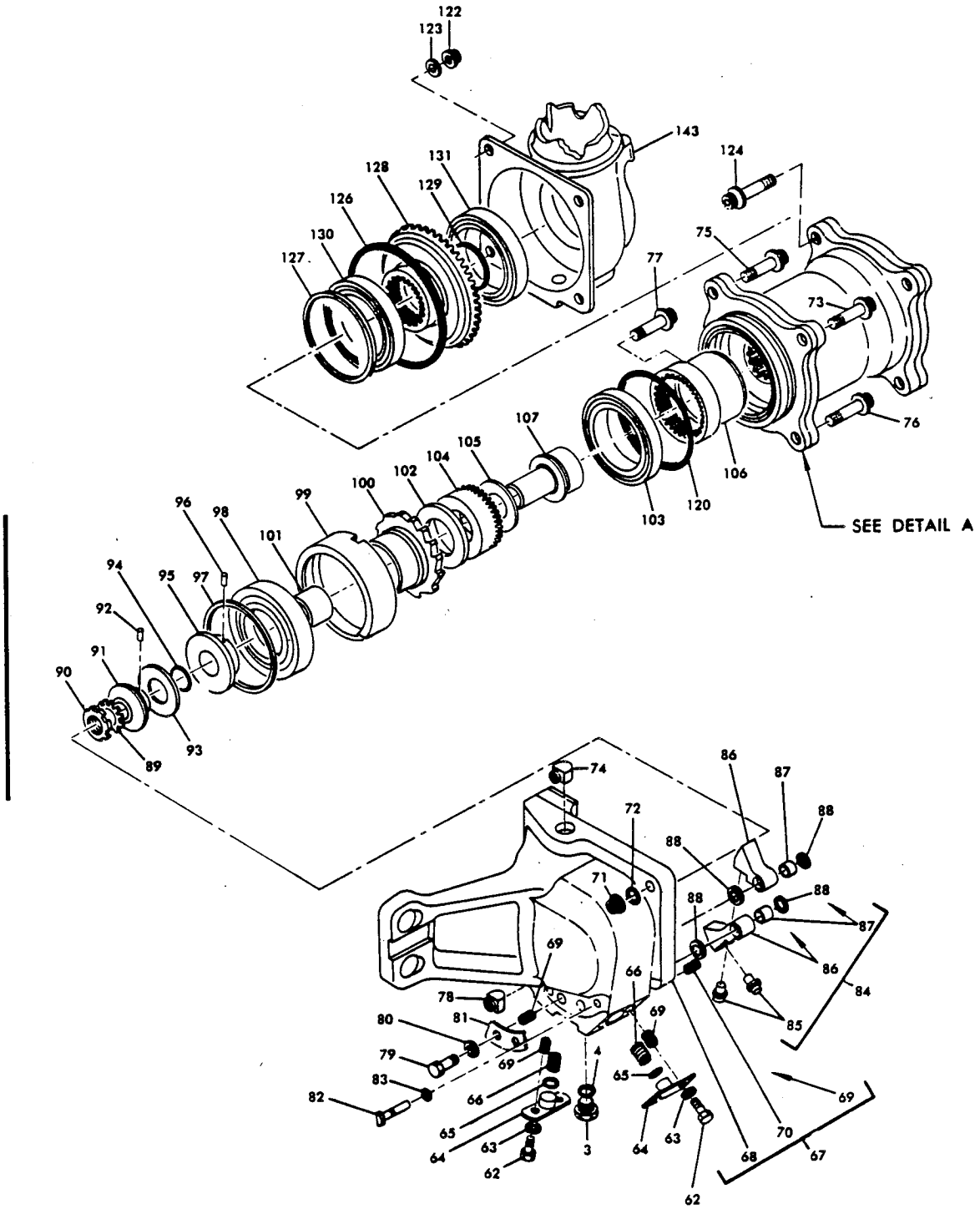

Trailing Edge Flap Drive Transmission Assemblies Nos. 2 and 7
Figure 1101 (Sheet 2)

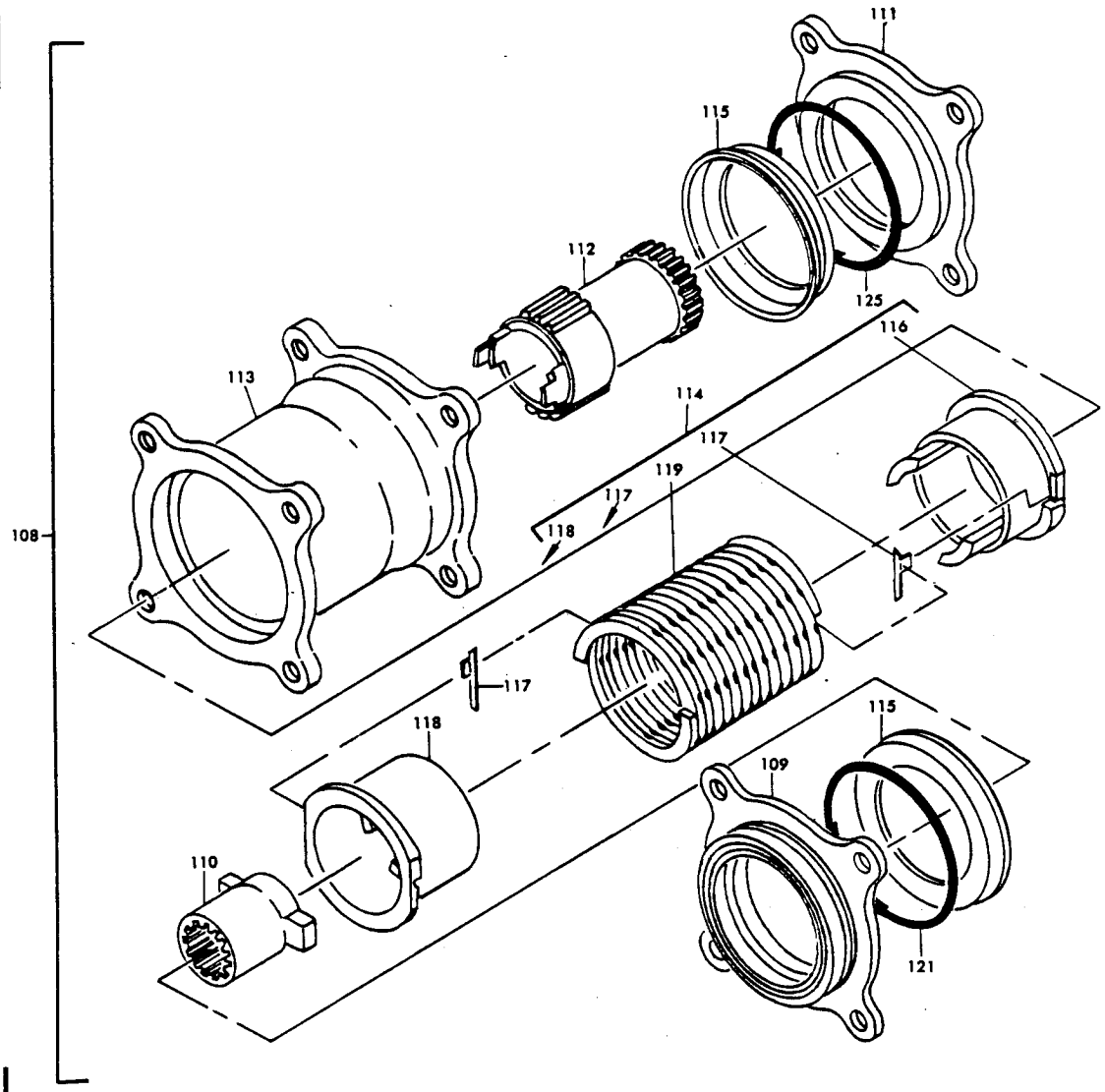

DETAIL A

Trailing Edge Flap Drive Transmission Assemblies Nos. 2 and 7
Figure 1101 (Sheet 3)

FIG. & ITEM NO.	PART NO.	AIRLINE PART NUMBER	NOMENCLATURE 1 2 3 4 5 6 7	USE CODE	QTY PER ASSY
1101-					
	65-50252-2		TRANSMISSION ASSY, TRAILING EDGE FLAP DRIVE NO. 2	A	
	65-50257-2		TRANSMISSION ASSY, TRAILING EDGE FLAP DRIVE NO. 7	B	
	65-50252-4		TRANSMISSION ASSY, TRAILING EDGE FLAP DRIVE NO. 2 (SB 27-1015)	C	
	65-50257-4		TRANSMISSION ASSY, TRAILING EDGE FLAP DRIVE NO. 7 (SB 27-1015)	D	
	65-50252-5		TRANSMISSION ASSY, TRAILING EDGE FLAP DRIVE NO. 2	E	
	65-50257-5		TRANSMISSION ASSY, TRAILING EDGE FLAP DRIVE NO. 7	F	
	65-50252-6		TRANSMISSION ASSY, TRAILING EDGE FLAP DRIVE NO. 2	G	
	65-50257-6		TRANSMISSION ASSY, TRAILING EDGE FLAP DRIVE NO. 7	H	
	65-50252-7		TRANSMISSION ASSY, TRAILING EDGE FLAP DRIVE NO. 2	I	
	65-50257-7		TRANSMISSION ASSY, TRAILING EDGE FLAP DRIVE NO. 7	J	
	65-50252-8		TRANSMISSION ASSY, TRAILING EDGE FLAP DRIVE NO. 2	K	
	65-50257-8		TRANSMISSION ASSY, TRAILING EDGE FLAP DRIVE NO. 7	L	
1	AN814-4DL		. PLUG		1
2	MS28778-4		. PACKING, O-RING		1
3	AN814-4DL		. PLUG		2
4	MS28778-4		. PACKING, O-RING		2
5	65-76600-3		. UNIVERSAL JOINT ASSY	IJ	1
5	65-76600-5		. UNIVERSAL JOINT ASSY	KL	1
5	65-76600-2		. UNIVERSAL JOINT ASSY	A-F	1
5	69-37652-11		. UNIVERSAL JOINT ASSY (SB 27-1015) (OPT)	A-F	1
5	69-37652-6		. UNIVERSAL JOINT ASSY (OPT)	AB	1
5	69-37652-13		. UNIVERSAL JOINT ASSY (SB 27-1015) (OPT)	A-D	1
5	69-37652-8		. UNIVERSAL JOINT ASSY (OPT)	AB	1
5	65-76600-2		. UNIVERSAL JOINT ASSY	GH	1
6	69-37652-9		DELETED		
7	BACN10JC7C		. . NUT (REPLS NAS1022C7)(USED ON 69-37652-6,-8)		1
7	BACN10JC7		. . NUT (USED ON 69-37652-11,-13 AND 65-76600-2,-3,-5)		1

FIG. & ITEM NO.	PART NO.	AIRLINE PART NUMBER	NOMENCLATURE 1 2 3 4 5 6 7	USE CODE	QTY PER ASSY
1101-					
8	BAC27DCT48		DELETED		1
9	66-23909-1		. . BOLT (USED ON 69-37652-6,-8)		1
9	66-23909-2		. . BOLT (USED ON 69-37652-11,-13) (OPT TO 65-76604-1)		1
9	65-76604-1		. . BOLT (USED ON 65-76600-2,-3,-5; 69-37652-11,-13)		1
10	66-23905-1		. . SPACER (USED ON 69-37652-6,-8, -11,-13)		1
10	69-60050-1		. . SPACER (USED ON 65-76600-2,-3,-5)		1
11	66-23907-1		. . PIN, CROSS (USED ON 69-37652-6, -8,-11,-13)		1
11	69-60054-1		. . PIN, CROSS (USED ON 65-76600-2, -3,-5)		1
12	69-37646-6		. . SHAFT (USED ON 65-76600-5)		1
12	65-80933-2		. . SHAFT (OPT)(USED ON 65-76600-5)		1
12	69-37646-4		. . SHAFT (USED ON 69-37652-8,-13)		1
12	69-37646-5		. . SHAFT (USED ON 69-37652-6,-11; 65-76600-2,-3)(OPT TO 65-80933-1)		1
12	69-62744-3		. . SHAFT (REPLS 69-37646-4,-5 PER SB 27-1048)	A-J	1
12	65-80933-1		. . SHAFT (OPT)(USED ON 69-37652-6, -11; 65-76600-2,-3)		1
12	69-62744-6		. . SHAFT (REPLS 69-80933-1 PER SB 27-1048)	A-FIJ	1
13	69-37675-1		. . CROSS, TRUNNION (USED ON 69-37652-6,-8,-11,-13)		1
13	65-76638-1		. . CROSS, TRUNNION (USED ON 65-76600-2,-3,-5)		1
14	69-37642-1		. . YOKE (USED ON 69-37652-8,-13)		1
14	69-37642-3		. . YOKE (USED ON 69-37652-6,-11)		1
14	69-37642-2		. . YOKE (USED ON 69-37652-6,-11; 65-76600-2,-3,-5)(OPT TO 69-37642-3)		1
15	10-61899-16		. . BUSHING *[2]		4
15	DBAF-16-083		. . BUSHING, V81376 (BOEING 10-60516-250)(OPT)		4

FIG. & ITEM NO.	PART NO.	AIRLINE PART NUMBER	NOMENCLATURE 1 2 3 4 5 6 7	USE CODE	QTY PER ASSY
1101-					
15	90585		. . BUSHING, V09455 (BOEING 10-60516-250)(USED ON 69-37652-6, -7,-8,-11,-13; 65-76600-2)(OPT)		4
15	69-52475-1		. . BUSHING (SB 27-1036)(USED ON 65-76600-3,-5)		4
16	69-37677-2		. COUPLING		1
17	BACN10JC6		. NUT (REPLS NAS679A6)		1
18	66-24715-1		. WASHER		1
19	69-37605-5		. GEAR		1
19	69-37605-4		. GEAR (OPT TO 69-37605-5)		1
19	69-37605-3		. GEAR (OPT TO 69-37605-5)	A-D	1
20	NAS1351-4H12P		. BOLT		4
21	AN960-416		. WASHER		4
22	66-24721-4		. RETAINER		1
23	2-036-N304-7		. O-RING, V83259		1
24	69-73393-3		DELETED		
24	67X363		. SEAL, V73680		1
24	21959-0363		. SEAL, V73680 (OPT)		1
25	66-25105-2		. SHIM		1
26	69-37680-1		. O-RING		1
27	66-25129-1		. RING, BACKUP		2
28	66-24718-1		. SPACER		1
29	106KS		. BEARING, V38443		1
29	BACB10BA30		. BEARING (OPT)(REPLS BACB10A17)		1
30	66-23920-2		. SPACER		1
31	106KS		. BEARING, V38443		1
31	BACB10BA30		. BEARING (OPT)(REPLS BACB10A17)		1
32	69-37677-2		. COUPLING		1
33	BACN10JC6		. NUT (REPLS NAS679A6)		1
34	66-24715-1		. WASHER		1
35	69-37605-5		. GEAR		1
35	69-37605-4		. GEAR (OPT)		1
35	69-37605-3		. GEAR (OPT)	A-D	1
36	NAS1351-4H12P		. BOLT		4
37	AN960-416		. WASHER		4
38	66-24721-4		. RETAINER		1
39	2-036-N304-7		. O-RING, V83259		1
40	69-73393-3		DELETED		
40	67X363		. SEAL, V73680		1
40	21959-0363		. SEAL, V73680 (OPT)		1
41	66-25105-2		. SHIM		1
42	69-37680-1		. O-RING		1
43	66-25129-1		. RING, BACKUP		2
44	66-24718-1		. SPACER		1

FIG. & ITEM NO.	PART NO.	AIRLINE PART NUMBER	NOMENCLATURE 1 2 3 4 5 6 7	USE CODE	QTY PER ASSY
1101					
45	106KS		. BEARING, V38443		1
45	BACB10A17		. BEARING (OPT)		1
46	66-23920-2		. SPACER		1
47	106KS		. BEARING, V38443		
47	BACB10BA30		. BEARING (OPT)(REPLS BACB10A17)		1
48	NAS1351-4H10P		. BOLT		4
49	AN960-416		. WASHER		4
50	69-37685-3		. . COVER ASSY		1
50	69-37685-2		. COVER ASSY (OPT)		1
51	69-37634-5		. . COVER		1
52	66-25130-2		. . TUBE		1
53	MS28775-146		. PACKING, O-RING		1
54	HDF-103-15		. BEARING, V40920		1
54	BACB10BA17		. BEARING (OPT)(REPLS BACB10A333)		1
55	69-37611-2		. GEAR		1
55	69-37611-1		. GEAR (OPT)		1
56	MS19070-04		. WASHER		1
57	MS19068-04		. NUT		1
58	69-37602-1		. GEAR		1
59	206K		. BEARING, V21335		1
59	BACB10AZ30		. BEARING (OPT)(REPLS BACB10A13)		1
60	66-23946-1		. SHIM		1
61	66-24700-1		. SHIM		1
62	NAS1351-3H6P		. BOLT		4
63	AN960-10		. WASHER		4
64	66-24729-1		. RETAINER		2
65	MS28775-012		. PACKING, O-RING		2
66	66-23937-1		. SPRING		2
67	69-37662-3		. HOUSING ASSY	ACEGIK	1
67	69-37662-4		. HOUSING ASSY	BDFHGL	1
68	65-50294-5		. . HOUSING	ACEGIK	1
68	65-50294-8		. . HOUSING	BDFHGL	1
69	MS21208F1-15		. . INSERT		6
70	MS21208F5-15		. . INSERT		1
71	BACN10HR6		. NUT		1

FIG. & ITEM NO.	PART NO.	AIRLINE PART NUMBER	NOMENCLATURE 1 2 3 4 5 6 7	USE CODE	QTY PER ASSY
1101					
72	BACW10BN6P		. WASHER		1
73	BACB30MT6T14		. BOLT		1
74	NAS577-6A		. NUT (REPLS NAS577-6)		1
75	BACB30MT6T10		. BOLT		1
76	BACB30MT5T6		. BOLT		1
77	BACB30MT5T10		. BOLT		1
78	NAS577-5A		. NUT (REPLS NAS577-5)		1
79	NAS1351-3H6P		. BOLT		2
80	AN960-10		. WASHER		2
81	66-24728-1		. RETAINER		1
82	66-24717-2		. PIN		2
83	MS28775-009		. PACKING, O-RING		2
84	66-24736-2		. PAWL ASSY		2
85	66-23908-1		. . GUIDE		1
86	66-23901-2		. . PAWL		1
87	66-25126-1		. . BEARING		1
88	66-23929-2		. WASHER		4
89	MS172273		. WASHER		1
90	69-37683-1		. NUT		1
91	66-24738-1		. RACE		1
92	AN122691		. DOWEL		1
93	NTA1828		. BEARING, V60380		1
94	66-25100-1		. SHIM		1
95	66-24733-1		. RETAINER		1
96	AN122691		. DOWEL		1
97	66-24730-2		. SHIM		1
97	66-24730-1		. SHIM (OPT)		1
98	9209H		. BEARING, V38443 (PREF)		1
98	209M		. BEARING, V38443 (OPT TO 209W)		1
98	209W		. BEARING, V21335 (OPT TO 9209H)		1
99	69-37647-1		. RETAINER		1
100	69-37614-3		. RATCHET		1
100	69-37614-2		. RATCHET (OPT)		1
101	SCE1612		. BEARING, V21335		1
102	66-23936-1		. WASHER		1
103	BACB10B860		. BEARING (REPLS BACB10A352)		1
104	69-37650-1		. DRIVER		1
105	NTA1828		. BEARING, V60380		1
106	69-37663-3		. SUPPORT		1
106	69-37663-2		. SUPPORT (OPT)		1
107	69-37623-2		. PLATE		1

FIG. & ITEM NO.	PART NO.	AIRLINE PART NUMBER	NOMENCLATURE 1 2 3 4 5 6 7	USE CODE	QTY PER ASSY
1101					
108	175897		. TORQUE BRAKE ASSY, V71791	A-D	1
108	176830		. TORQUE BRAKE ASSY, V71791	E-L	1
109	175746		. . SUPPORT, V71791		1
110	175720		. . ADAPTER, V71791		1
111	175726		. . SUPPORT, V71791	A-D	1
111	176827		. . SUPPORT, V71791	E-L	1
112	175773		. . COUPLING, V71791		1
113	175735		. . HOUSING, V71791		1
114	175701		. . SPRING PACK ASSY, V71791		1
115	175739		. . . RING, V71791		2
116	175740		. . . SLEEVE, V71791		1
117	176278X		. . . SHIM, V71791		AR
118	175732		. . . SLEEVE, V71791		1
119	175734		. . . SPRING SET, V71791		1
120	MS28775-237		. PACKING, O-RING		1
121	2-045-N304-7		. O-RING, V83259		1
122	BACN10HR5		. NUT		4
123	AN960-516		. WASHER		4
124	BACB30MT5T12		. BOLT		4
125	2-045-N304-7		. O-RING, V83259		1
126	2-156-N304-7		. O-RING, V83259		1
127	66-24703-1		. SHIM	A-D	1
127	69-52450-1		. SHIM	E-L	1
128	69-37610-2		. GEAR	A-D	1
128	69-52410-1		. GEAR	E-L	1
129	RR187		. RING, V80756		1
130	BACB10BB60		. BEARING (REPLS BACB10A352)	A-D	1
130	111GE		. BEARING, V21335	E-L	1
131	BACB10BB60		. BEARING (REPLS BACB10A352)		1
132	BACN10JC4		. NUT (REPLS NAS679A4W)		7
133	AN960-416		. WASHER		7
134	NAS584-11		. SCREW		7
134	BACB30JC8-12		. SCREW (REPLS NAS584-11 PER SB 27-1048)		7
135	69-62757-1		. RETAINER (REPLS 69-37686-2 PER SB 27-1048)	KL	1
135	69-37686-2		. RETAINER		1
136	69-37669-5		. SUPPORT	A-J	1
136	69-37669-4		. SUPPORT	KL	1
136	69-62733-1		. SUPPORT (OPT)	KL	1
136	69-37669-3		. SUPPORT (OPT TO 69-37669-5)	A-J	1
136	69-37669-4		. SUPPORT (REPLS 69-37669-3 PER SB 27-1048)	A-J	1
137	MS28775-010		. PACKING, O-RING		7
138	2-039-N304-7		. O-RING, V83259		1

FIG. & ITEM NO.	PART NO.	AIRLINE PART NUMBER	NOMENCLATURE 1 2 3 4 5 6 7	USE CODE	QTY PER ASSY
1101-					
138A	MS28775-143		. PACKING, O-RING (ADDED BY SB 27-1048)	KL	1
139	HDFZZ008-8		. BEARING, V40920	A-J	1
139A	69-73393-5		. SEAL, V73680	KL	1
139A	21959-0700		. SEAL (REPLS HDFZZ08-8 PER SB 27-1048), V73680 (OPT)	KL	1
140	69-62758-1		. SPACER (REPLS 66-23925-2 PER SB 27-1048)	KL	1
140	66-23925-2		. SPACER		1
141	69-73393-4		. SEAL, V73680		1
141	67X535		. SEAL, V73680 (OPT)		1
141	21959-0535		. SEAL, V73680 (OPT)		1
141A	HDF007P3		. BEARING (REPLS 67X535 PER SB 27-1048) *[1]	KL	1
142	65-50288-3		. HOUSING ASSY	ACEGIK	1
142	65-50288-4		. HOUSING ASSY	BDFHJL	1
143	65-50281-11		. . HOUSING	ACEGIK	1
143	65-50281-12		. . HOUSING	BDFHJL	1
144	MS21208F4-15		. . INSERT (REPLS MS124696)		12
144	MS124696		. . INSERT (REPLD BY MS21208F4-15)		12
144A	69-37688-1		. . DISK		1
145	NAS601-4P		. SCREW (REPLS AN515-6R4)		2
145	AN515-6R4		. SCREW (REPLD BY NAS601-4P)		2
146	66-25101-1		. NAMEPLATE		1

*[1] HDF22007-9 (WITH SEALS REMOVED) MAY BE USED IN PLACE OF HDF007P3
*[2] REPLS DBAF-16-083, 90585, 69-52475-1