TO: ALL HOLDERS OF GROUND SERVICE DISCONNECT MODULAR PACKAGE ASSEMBLY OVERHAUL MANUAL, 29-13-21

REVISION NO. 5, DATED DEC 1/95

HIGHLIGHTS

DESCRIPTION OF CHANGE	TOPICS AFFECTED												
	D&O	D/Assy	Cleaning	Insp/Chk	Repair	Assy	F/C	Test	T/Shooting	S/Tools	Storage	IPL	L/Overhaul
Move installation of check valve P/N BACV10BT3, o-rings NAS1612-8 and NAS1612-12, and union MS21902D12 from preparation for test to preparation for storage								X					

GROUND SERVICE DISCONNECT MODULAR PACKAGE ASSEMBLY

29-13-21

BOEING P/N 65-44980-2, -7, -9, -13, -14
65-44981-1, -4, -5, -6, -7

AIRLINE P/N

THE FOLLOWING DIRECTIVES APPLY TO THIS SUBJECT:

BOEING SERVICE BULLETIN	BOEING TEMPORARY REVISION	OTHER DIRECTIVES	DATE DIRECTIVE INCORPORATED INTO TEXT
		PRR 31941	Dec 25/72
		PRR 32070-10	Dec 25/73
		PRR 34907	Dec 5/90
29-1062			Sep 5/91

LIST OF EFFECTIVE PAGES

* Indicates pages revised, added or deleted in latest revision
F Indicates foldout pages - print one side only

PAGE	DATE	PAGE	DATE	PAGE	DATE
29-13-21					
T-1	Mar 5/93				
T-2	BLANK				
* LEP-1	Dec 1/95				
LEP-2	BLANK				
T/C-1	Mar 10/70				
T/C-2	BLANK				
1	Dec 25/73				
2	Mar 10/70				
3	Dec 25/75				
4	Mar 5/93				
* 5	Dec 1/95				
* 6	Dec 1/95				
7	Mar 10/70				
8	Mar 10/70				
9	BLANK				
10	Mar 5/93				
11	Mar 5/93				
12	Dec 25/72				
13	Mar 5/93				
14	BLANK				

TABLE OF CONTENTS

Paragraph Title	Page
Description and Operation	1
Disassembly	2
Cleaning	2
Inspection/Check	3
Repair	3
Assembly	4
Fits and Clearances	None
Testing	5
Trouble Shooting	8
Storage Instructions	8
Special Tools, Fixtures, and Equipment	None
Illustrated Parts List	10
Numerical Parts List Index	None

GROUND SERVICE DISCONNECT MODULAR PACKAGE ASSEMBLY

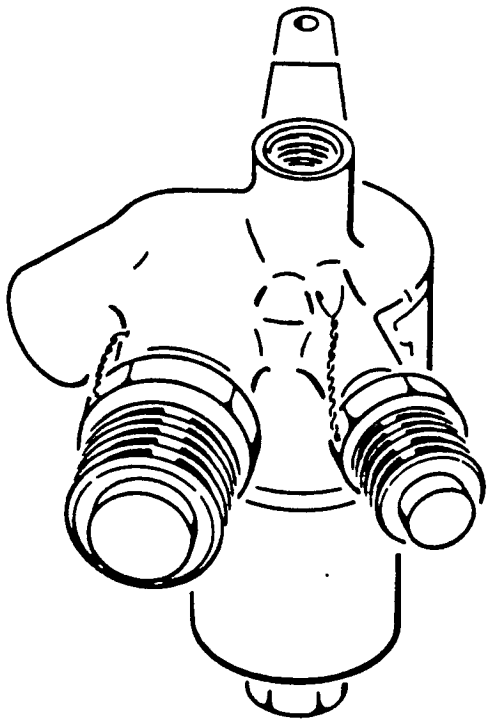

Ground Service Disconnect Modular Package Assembly
Figure 1

1. DESCRIPTION AND OPERATION

A. Description

(1) The ground service disconnect modular package assembly consist of a housing, two quick-disconnect coupling halves, a filter bowl and a noncleanable, 15 micron hydraulic filter element assembly.

B. Operation

(1) The unit is located on the forward bulkhead in the right wheel well of the airplane. Hydraulic fluid is supplied through it to the hydraulic reservoir of the airplane and drained from the airplane. The supply line is connected to the smaller quick-disconnect coupling. In this case the hydraulic fluid flows through the filter. The drain line is connected to the larger quick-disconnect coupling. The hydraulic fluid flows through the housing without flowing through the filter.

C. Leading Particulars

Length (overall) -- 8 inches
Height (overall) -- 7.5 inches
Width (overall) -- 6.75 inches
Weight -- 4.6 pounds
Operating Medium -- Hydraulic fluid, BMS 3-11

2. DISASSEMBLY

A. Procedure (See figure 4.)

(1) Cut all lockwires. Remove parts (1 through 6, figure 5) if installed.

(2) Remove quick-disconnect coupling halves (1 and 3) and packings (2 and 4).

(3) Unscrew filter bowl (5). Remove filter element (8), packing (6) and backup ring (7).

(4) Unscrew filter fitting (9). Remove packings (10 and 11) and backup rings (12).

3. CLEANING

A. Wash all metal parts with dry cleaning solvent, Specification P-D-680.

B. Clean all bores, holes, threads and passages with a stiff bristle brush to remove stubborn accumulations of foreign matter.

C. Rinse and dry thoroughly with dry compressed air or with clean, lint-free cloth.

D. For further information, refer to "General Cleaning Procedures," Subject 20-30-03.

4. INSPECTION/CHECK

A. Visual Check (Fig. 4)

(1) Examine all metal parts for cracks, burrs, corrosion and other damage using strong light and minimum of 10-power magnification.

(2) Carefully check for damage to packing seats and grooves.

(3) Check all plated and painted surfaces for blisters or flaking.

(4) Check threads for cross-threading and stripping.

(5) Check nameplate (14) for legibility and adhesion to housing (13).

B. Special Check (Fig. 4)

(1) Perform penetrant examination per 20-20-02 of bowl (5) and housing (13).

5. REPAIR

A. Deleted

B. Refinish (Fig. 4)

NOTE: Refer to 20-30-02 for stripping of protective finishes and to 20-41-01 for explanation of F and SRF finish codes.

(1) Deleted

(a) Bowl (5), fitting (9), housing (13) -- Chromic acid anodize (F-2.26) all over. Material: Al alloy.

C. Replacement (Fig. 4)

(1) Replace all packings and filter element (8) at each overhaul.

(2) Replace parts found unserviceable or which are damaged beyond simple repair.

(3) If nameplate (14) needs replacement, bond a new nameplate (14, P/N BACN12A3MU) on housing (13) per 20-50-12, type 38, special method 1 or install a new nameplate (14, P/N BAC27NCT0290) on housing (13) with strap (15).

6. ASSEMBLY

A. General

(1) Prior to assembly lubricate all packings and backup rings with BMS 3-11 hydraulic fluid or Skydrol Assembly Lube MCS-352.

(2) Lightly lubricate all threads with BMS 3-11 hydraulic fluid or Skydrol Assembly Lube MCS-352.

(3) For assembly of packings, refer to 20-50-06, Installation of O-Rings and Teflon Seals.

B. Assembly (Fig. 4)

(1) Install packing (11) and backup rings (12) in groove of housing (13).

(2) Slide packing (10) on filter fitting (9). Screw into housing. Tighten within torque range of 50 to 200 pound-inches.

(3) Install packing (6) and backup ring (7) in groove of filter element (8). Slide on filter fitting (9) until bottomed.

(4) Slide filter bowl (5) over filter element. Screw on housing (13). Tighten within torque range of 50 to 75 pound-inches.

(5) Install packing (4) on coupling half (3). Screw into housing port. Tighten within torque range of 300 to 350 pound-inches.

(6) Install packing (2) on coupling half (1). Screw into housing port. Tighten within torque range of 680 to 800 pound-inches.

(7) Lockwire filter bowl (5), and coupling halves (3 and 1) to housing (13).

C. Materials

(1) BMS 3-11 hydraulic fluid

(2) Skydrol Assembly Lube MCS-352 – Monsanto Co., Inc., 800 Lindbergh Blvd., St. Louis, Missouri 63166

(3) Lockwire – MS20995NC32

7. TESTING

A. Test Equipment

(1) Test bench capable of delivering graduated hydraulic pressure up to 4500 psi.

B. Preparation for Test

(1) Conduct tests at room temperature with BMS 3-11 hydraulic fluid. Use of Skydrol 7000 is optional. Follow the sequence shown below.

(2) Flow through any open port is not to be considered external leakage. Ports not mentioned in particular test may either be open or closed.

WARNING: DO NOT APPLY COMPRESSED AIR TO PORTS AT ANY TIME.

C. Functional Tests

(1) Proof pressure test.

(a) Apply 4500 psi hydraulic pressure to 1/2-inch port (Fig. 2) for 2 minutes. There shall be no external leakage or permanent set. Leakage through 5/8-inch disconnect shall not exceed one drop in 3 minutes.

(b) Reduce pressure to 2 psi. Hold for 2 minutes. There shall be no external leakage. Leakage through 5/8-inch disconnect shall not exceed one drop in 3 minutes.

(c) Apply 900 psi hydraulic pressure to 3/4-inch port for 2 minutes. There shall be no external leakage or permanent set. Leakage through 1-1/4-inch disconnect shall not exceed one drop in 3 minutes.

(d) Reduce pressure to 2 psi. Hold for 2 minutes. There shall be no external leakage. Leakage through 1-1/4-inch disconnect shall not exceed one drop in 3 minutes.

(2) Flow test.

(a) With appropriate quick-disconnect mating half attached, apply 900 psi hydraulic pressure to 5/8-inch disconnect. Free flow shall be observed from 1/2-inch port.

(b) With appropriate quick-disconnect mating half attached, apply 900 psi hydraulic pressure to 1-1/4-inch disconnect. Free flow shall be observed from 3/4-inch port.

D. Preparation for Storage

(1) After test completion, partially fill unit with BMS 3-11 hydraulic fluid. If Skydrol 7000 was used for testing, unit must be drained thoroughly before partially filling with BMS 3-11.

(2) Install parts (1 thru 4, Fig. 5) on package assembly (7, Fig. 5).

(3) Cap or plug ports with BMS 3-11 resistant caps or plugs.

(4) Screw dust caps (5 and 6, Fig. 5) on quick-disconnects.

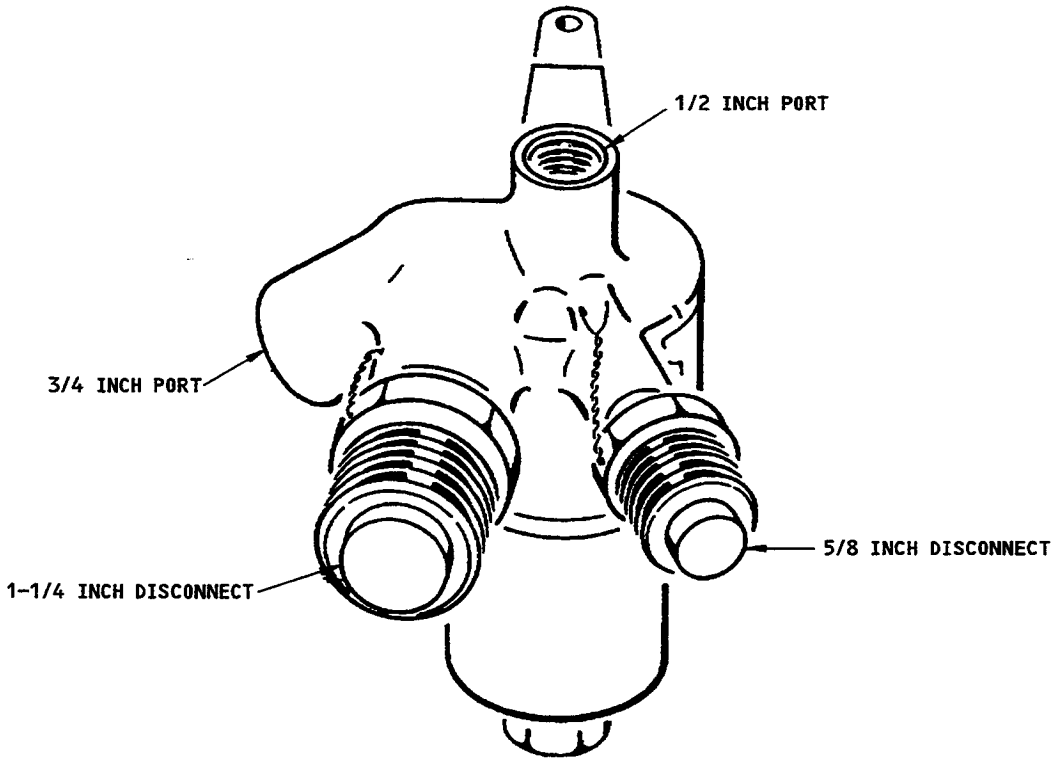

Functional Tests
Figure 2

F39467

Test Phase	Limits
Proof Pressure Test	
Apply 4500 psi hydraulic pressure to 1/2-inch port for 2 minutes.	No external leakage or permanent set. Leakage through 5/8-inch disconnect one drop maximum in 3 minutes.
Repeat with 2 psi for 2 minutes.	No external leakage. Allowable leakage through 5/8-inch disconnect as above.
Apply 900 psi to 3/4-inch port for 2 minutes.	No external leakage or permanent set. Allowable leakage through 1-1/4-inch disconnect one drop maximum in 3 minutes.
Repeat with 2 psi for 2 minutes.	No external leakage. Allowable leakage through 1-1/4-inch disconnect as above.
Flow Test	
Apply 900 psi hydraulic pressure to 5/8-inch disconnect.	Free flow from 1/2-inch port.
Apply 900 psi to 1-1/4-inch disconnect.	Free flow from 3/4-inch port.

Test Limits
Figure 3

8. TROUBLE SHOOTING

A. Trouble during test after overhaul. (See figure 4.)

	Trouble	Possible Cause	Correction
(1)	Excessive leakage through disconnect coupling half (1 or 3)	Weak or defective valve spring; damaged valve seat; foreign matter	Disassemble, check, clean, repair or replace
(2)	No free flow through open ports	Foreign matter or defective valve of disconnect coupling half (1 or 3)	Disassemble, check, clean, repair or replace

9. STORAGE INSTRUCTIONS

A. Partially fill unit with BMS 3-11 hydraulic fluid. Cap or plug ports with BMS 3-11 resistant caps or plugs.

B. Wrap unit in vapor barrier paper. Attach tag showing test date and cure date for packings. Tag should carry the following information. "This unit contains BMS 3-11 hydraulic fluid."

C. For further information, refer to "Temporary Protective Coatings," Subject 20-44-02.

10. ILLUSTRATED PARTS LIST

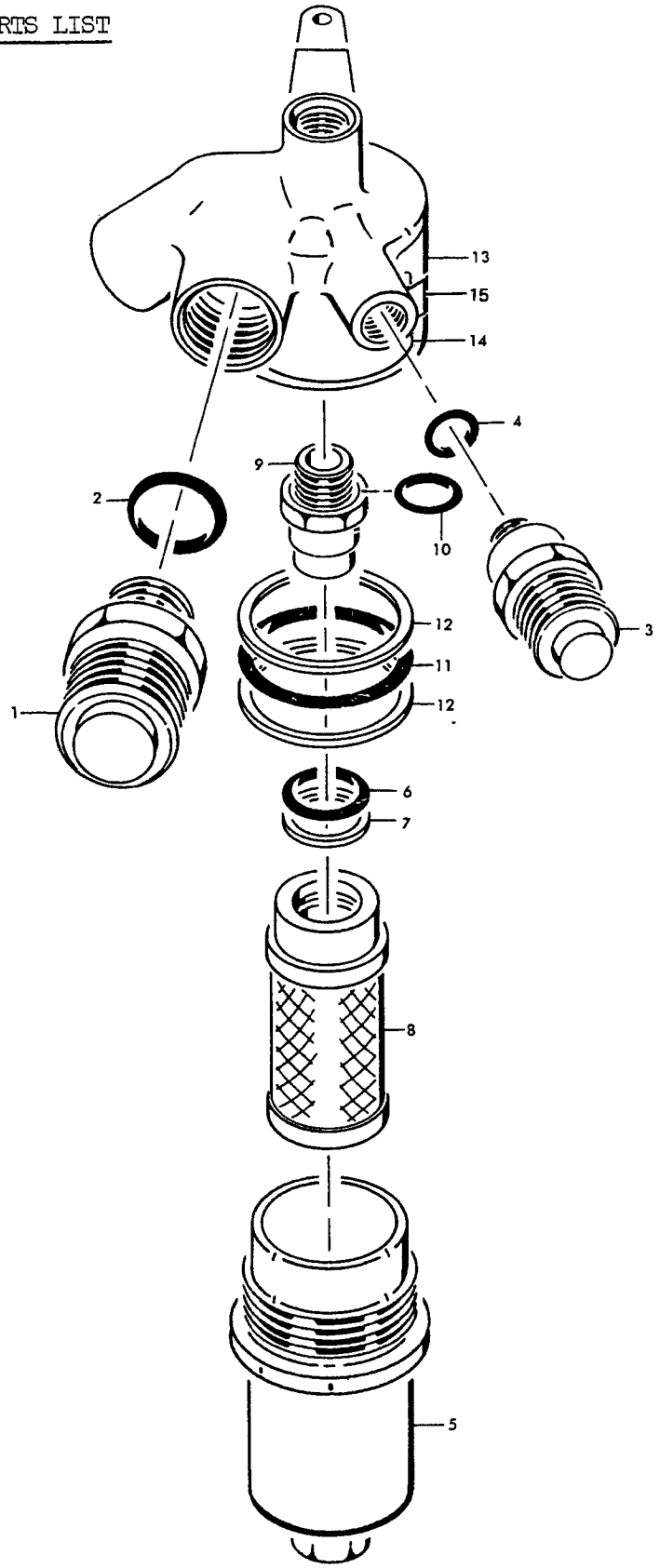

Ground Service Disconnect Modular Package Assembly
Figure 4

FIG. & ITEM NO.	PART NO.	AIRLINE PART NUMBER	NOMENCLATURE 1 2 3 4 5 6 7	USE CODE	QTY PER ASSY
4-					
	65-44981-1		GROUND SERVICE DISCONNECT MODULAR PACKAGE ASSY	A	RF
	65-44981-4		GROUND SERVICE DISCONNECT MODULAR PACKAGE ASSY	B	RF
	65-44981-5		GROUND SERVICE DISCONNECT MODULAR PACKAGE ASSY	C	RF
	65-44981-6		GROUND SERVICE DISCONNECT MODULAR PACKAGE ASSY	D	RF
	65-44981-7		GROUND SERVICE DISCONNECT MODULAR PACKAGE ASSY	E	RF
1	AE90432N		. COUPLING HALF, QUICK-DISCONNECT, V00624	ABCD	1
1	AE80994N		. COUPLING HALF, QUICK-DISCONNECT, V00624	E	1
2	NAS1612-20		. PACKING, O-RING		1
3	AE90431J		. COUPLING HALF, QUICK-DISCONNECT, V00624	ABCD	1
3	AE88972J		. COUPLING HALF, QUICK-DISCONNECT, V00624	E	1
4	NAS1612-10		. PACKING, O-RING		1
5	65-17989-4		. BOWL, FILTER (PRE SB 29-1062)	AB	1
5	65-17989-12		. BOWL, FILTER (POST SB 29-1062)	AB	1
5	65-17989-8		. BOWL, FILTER (PRE SB 29-1062)	C	1
5	65-17989-10		. BOWL, FILTER (POST SB 29-1062)	C	1
5	65-17989-10		. BOWL, FILTER	DE	1
6	NAS1611-214		. PACKING, O-RING		1
7	MS28782-19		. RING, BACKUP		1
8	7513122		. ELEMENT ASSY, HYDRAULIC FILTER, V05228 (BOEING 10-60592-1)		1
8	AC7681E1		. ELEMENT ASSY, HYDRAULIC FILTER, V18350 (BOEING 10-60592-1)		1
8	054280		. ELEMENT ASSY, HYDRAULIC FILTER, V90005 (BOEING 10-60592-1)		1
8	7513128		. ELEMENT ASSY, HYDRAULIC FILTER, V05228 (BOEING 10-60592-5)(OPT)		1
8	10-60592-6		. ELEMENT ASSY, HYDRAULIC FILTER, V18350 (OPT)		1
9	66-12196-1		. FITTING, FILTER		1
10	NAS1612-10		. PACKING, O-RING		1
11	NAS1611-228		. PACKING, O-RING		1
12	S12766-228		. RING, BACKUP, V97820		2
13	65-44982-1		. HOUSING	A	1
13	65-44982-4		. HOUSING	BCDE	1
14	BACN12A3MU		. NAMEPLATE		1
14	BAC27NCT0290		. NAMEPLATE (OPT)		1
15	69-35587-20		. STRAP (USED WITH BAC27NCT0290)		1

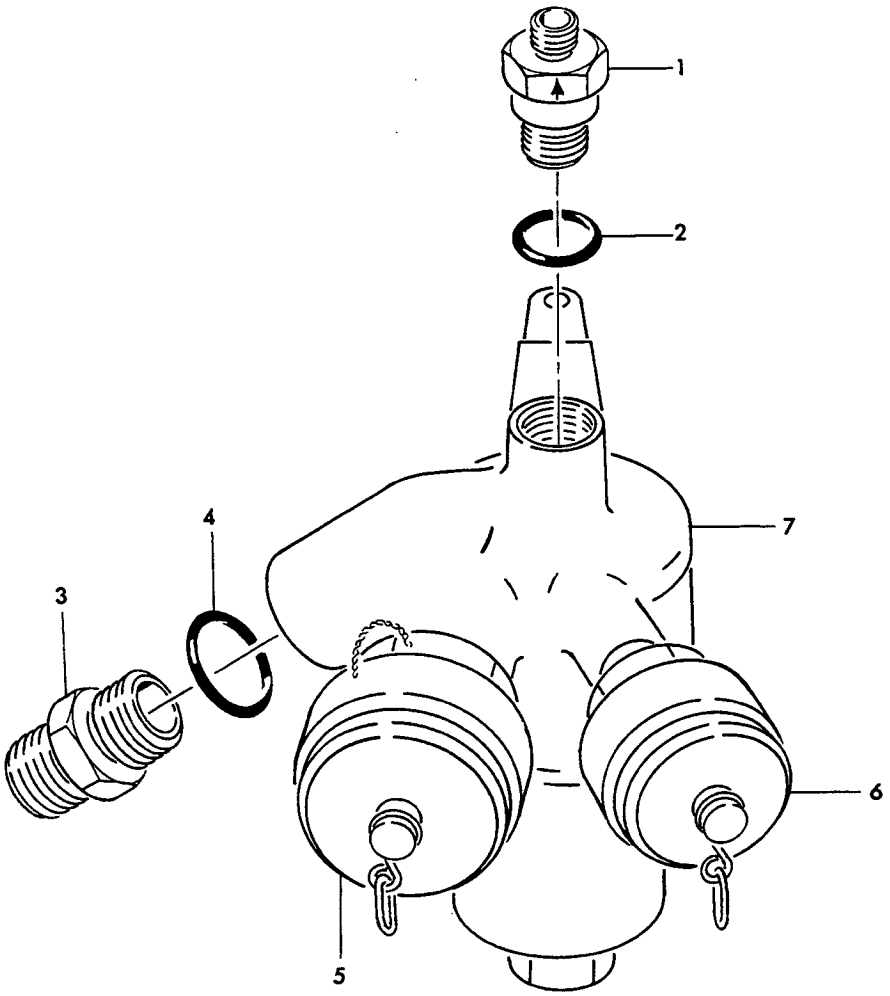

Hydraulic Ground Service Modular Disconnect Assembly
Figure 5

FIG. & ITEM NO.	PART NO.	AIRLINE PART NUMBER	NOMENCLATURE 1 2 3 4 5 6 7	USE CODE	QTY PER ASSY
5-					
	65-44980-2		HYDRAULIC GROUND SERVICE MODULAR DISCONNECT ASSY	A	RF
	65-44980-7		HYDRAULIC GROUND SERVICE MODULAR DISCONNECT ASSY	B	RF
	65-44980-9		HYDRAULIC GROUND SERVICE MODULAR DISCONNECT ASSY	C	RF
	65-44980-13		HYDRAULIC GROUND SERVICE MODULAR DISCONNECT ASSY	D	RF
	65-44980-14		HYDRAULIC GROUND SERVICE MODULAR DISCONNECT ASSY	E	RF
1	BACV10BT3		. VALVE, CHECK		1
2	NAS1612-8		. PACKING, O-RING		1
3	MS21902D12		. UNION		1
4	NAS1612-12		. PACKING, O-RING		1
5	014567S7-20D		. CAP, DUST, V00624		1
6	015503S7-12D		. CAP, DUST, V00624		1
7	65-44981-1		. PACKAGE ASSY, GROUND SERVICE DISCONNECT MODULAR (FIG. 4)	A	1
7	65-44981-4		. PACKAGE ASSY, GROUND SERVICE DISCONNECT MODULAR (FIG. 4)	B	1
7	65-44981-5		. PACKAGE ASSY, GROUND SERVICE DISCONNECT MODULAR (FIG. 4)	C	1
7	65-44981-6		. PACKAGE ASSY, GROUND SERVICE DISCONNECT MODULAR (FIG. 4)	D	1
7	65-44981-7		. PACKAGE ASSY, GROUND SERVICE DISCONNECT MODULAR (FIG. 4)	E	1

VENDORS

V00624 AEROQUIP CORPORATION, AEROSPACE-MARMAN DIVISION, JACKSON PLANT, 300 S. EAST AVE., JACKSON, MICHIGAN 49203-1972

V18350 AIRCRAFT POROUS MEDIA, INC., 6301 - 49TH STREET NORTH, PINELLAS PARK, FLORIDA 33565-8390

V05228 PUROLATOR TECHNOLOGIES, INC., 950 RANCHO CONEJO BOULEVARD, NEWBURY PARK, CALIFORNIA 91320

V90005 FACET ENTERPRISES INC., FILTER PRODUCTS DIVISION, 8439 TRAID DRIVE, GREENSBORO, NORTH CALIFORNIA 27409-9018

V97820 W.S. SHAMBAN AND CO., 711 MITCHELL ROAD, P.O. BOX 665, NEWBURY PARK, CALIFORNIA 91320-2214