757-204/236

ILLUSTRATED PARTS CATALOGUE

CHAPTER 31 – INDICATING AND RECORDING SYSTEMS

THOMSONFLY CUSTOMISATIONS

MANUAL NO: D6-49286-BRI-0060

757-204/236

PUBLICATION REVISION
ILLUSTRATED PARTS CATALOGUE

CHAPTER 31 – INDICATING RECORDING SYSTEM

EFFECTIVE PAGES

CH-SECT-UNIT-FIG	PAGE NO.	DATE	CH-SECT-UNIT-FIG	PAGE NO.	DATE
* 31 CONTENTS	1	NOV 02			
31-11-11-21	OA	MAY 02			
31-11-11-21	8A	MAY 02			
31-11-11-28	OA	MAY 02			
31-11-11-28	8A	MAY 02			
31-11-26-29	OA	MAY 02			
31-11-26-29	OA-A	MAY 02			
31-11-26-29	7A	MAY 02			
31-11-26-30	OA	MAY 02			
31-11-26-30	OA-A	MAY 02			
31-11-26-30	6A	MAY 02			
31-11-41-01	2A	DEC 01			
* 31-12-11-01A	8	NOV 02			
* 31-12-11-30A	8	NOV 02			
* 31-12-11-54A	9	NOV 02			
31-31-01-01	1	NOV 00			

* INDICATES PAGES CHANGED OR ADDED BY THE CURRENT REVISION

CHAPTER 31 - INDICATING RECORDING SYSTEM

TABLE OF CONTENTS

	SUBJECT	CHAPTER SECTION UNIT	FIGURE
	PILOT'S MAIN PANELS	31-11-00	
	PANEL INSTL – P1-1 (CAPTAIN'S INSTRUMENT PANEL ONLY	31-11-11	21
	PANEL INSTL – P1-1 (CAPTAIN'S INSTRUMENT PANEL ONLY	31-11-11	28
	PANEL INSTL – P3-1 FWD (FIRST OFFICERS INDICATING AND RECORDING)	31-11-26	29
	PANEL INSTL – P3-1 FWD (FIRST OFFICERS INDICATING AND RECORDING)	31-11-26	30
	PANEL INSTL – P10 STAND QUADRANT (INDICATING / RECORDING ONLY)	31-11-41	1
A	PANEL INSTL – P5 OVHD (INDICATING AND RECORDING SYSTEM ONLY)	31-12-11	01A
A	PANEL INSTL – P5 OVHD (INDICATING AND RECORDING SYSTEM ONLY)	31-12-11	30A
A	PANEL INSTL – P5 OVHD (INDICATING AND RECORDING SYSTEM ONLY)	31-12-11	54A
	FLIGHT DATA RECORDER SYSTEM (FDRS)	31-31-00	
	RECORDER AND SUPPORT INSTL – FLIGHT (INSTRUMENTS ONLY)	31-31-01	1

Supplement To 31-11-11-21. Insert In Front Of Page 0.

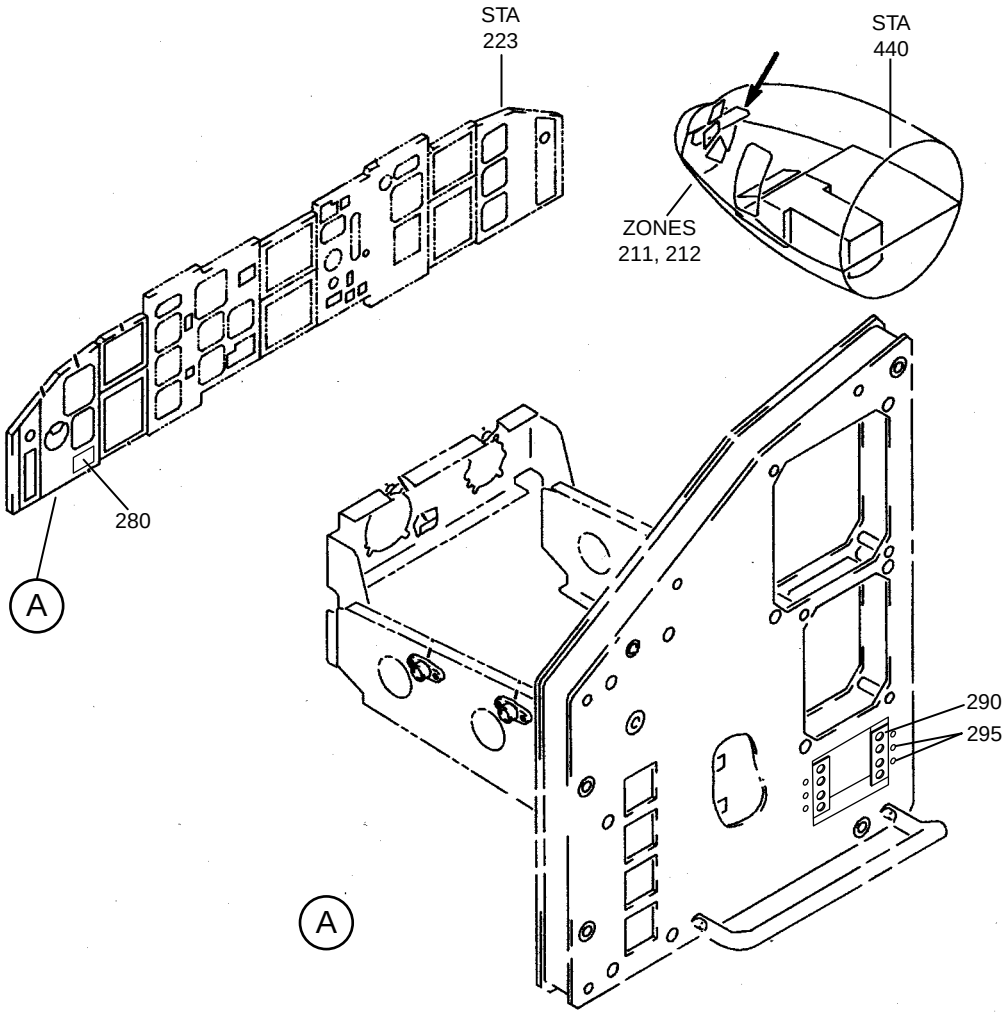

PWS757-005

PANEL INSTL-P1-1 (CAPTAIN'S INSTRUMENT PANEL ONLY)
FIGURE 21 (SHEET 1A)

FIG. ITEM	PART NUMBER	1 2 3 4 5 6 7 NOMENCLATURE	EFFECT FROM TO	UNITS PER ASSY
Supplement To 31-11-11-21.		Insert In Front Of Page 8.		
21 280	24013-001	• PANEL EGPWS ASSEMBLY SUPPLIER CODE: V75397 ELECTRICAL EQUIPMENT NUMBER: M9500 COMPONENT MAINTENANCE MANUAL: PS24013 FOR BREAKDOWN SEE: 34-46-51-01 ADDED PER HONEYWELL STC ST00381SE ----------*----------	002004 006010	RF
290	34-M757-109-5	• DZUS RAIL ATTACHING PARTS	002004 006010	2
295	CR3212-4-4	• RIVET ADDED PER HONEYWELL STC ST00381SE ----------*----------	002004 006010	6
- 300	T-187571	• FOAM CUSHION ADDED PER HONEYWELL STC ST00381SE ----------*----------	002004 006010	1

- ITEM NOT ILLUSTRATED

Supplement To 31-11-11-28. Insert In Front Of Page 0.

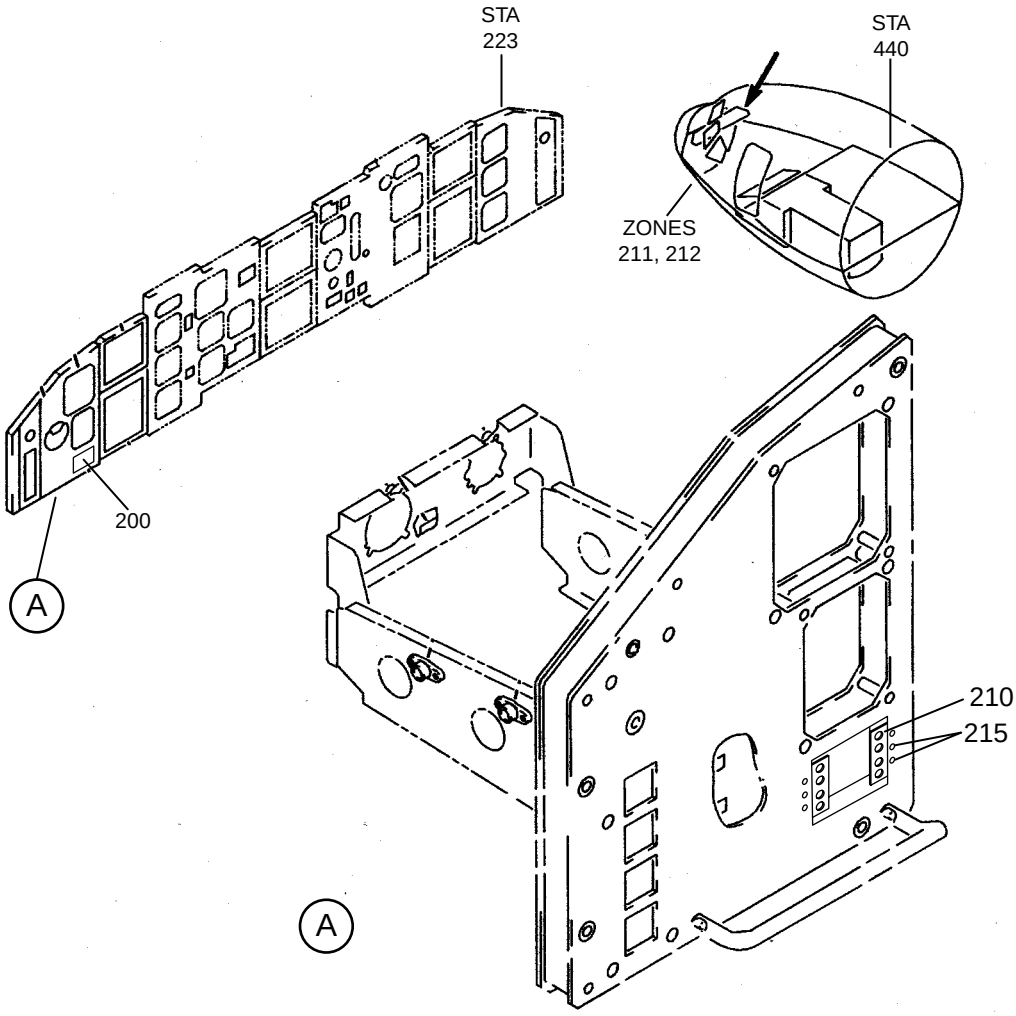

PWS757-006

PANEL INSTL-P1-1 (CAPTAIN'S INSTRUMENT PANEL ONLY)
FIGURE 28 (SHEET 1A)

FIG. ITEM	PART NUMBER	1 2 3 4 5 6 7 NOMENCLATURE	EFFECT FROM TO	UNITS PER ASSY
Supplement To 31-11-11-28.		Insert In Front Of Page 8.		
28 200	24013-001	• PANEL EGPWS ASSEMBLY SUPPLIER CODE: V75397 ELECTRICAL EQUIPMENT NUMBER: M9500 COMPONENT MAINTENANCE MANUAL: PS24013 FOR BREAKDOWN SEE: 34-46-51-02 ADDED PER HONEYWELL STC ST00381SE ----------*----------	011013 016018	RF
210	34-M757-109-5	• DZUS RAIL ATTACHING PARTS	011013 016018	2
215	CR3212-4-4	• RIVET ADDED PER HONEYWELL STC ST00381SE ----------*----------	011013 016018	6
- 220	T-187571	• FOAM CUSHION ADDED PER HONEYWELL STC ST00381SE ----------*----------	011013 016018	1

- ITEM NOT ILLUSTRATED

Supplement To 31-11-26-29. Insert In Front Of Page 0.

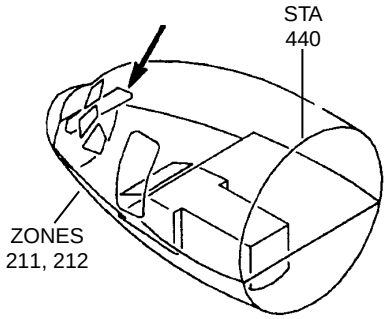

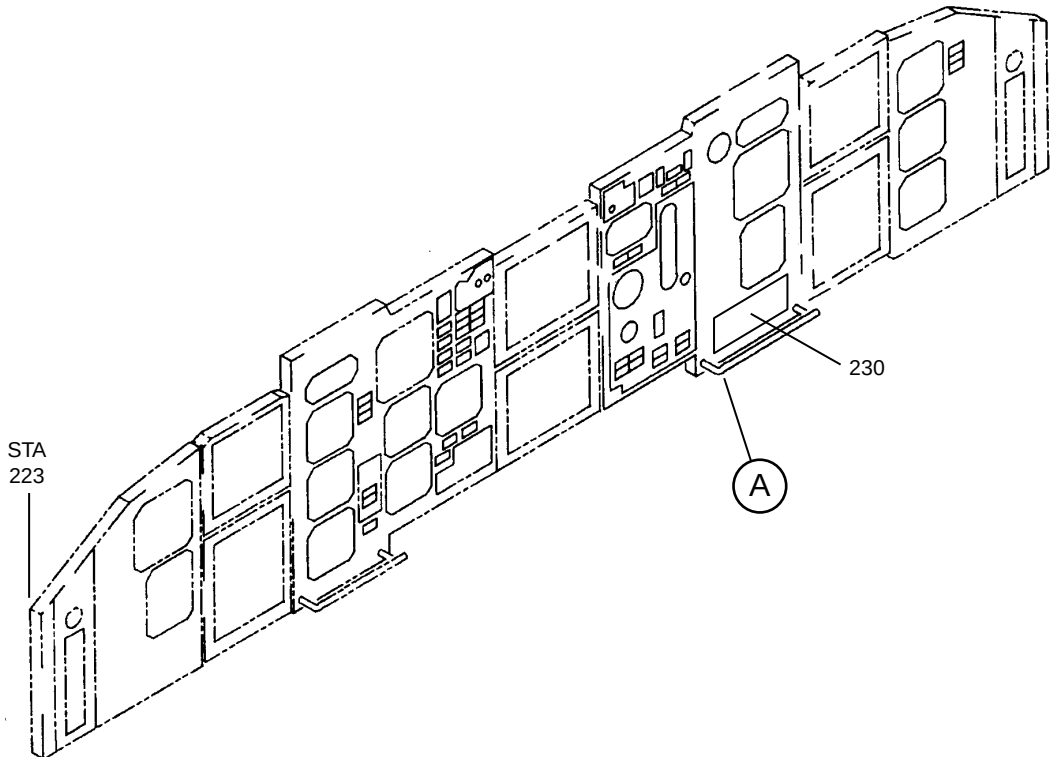

PWS757-007

PANEL INSTL-FIRST OFFICERS P3-1 FWD (INDICATING AND RECORDING ONLY)
FIGURE 29 (SHEET 1A)

Supplement To 31-11-26-29. Insert In Front Of Page 0A.

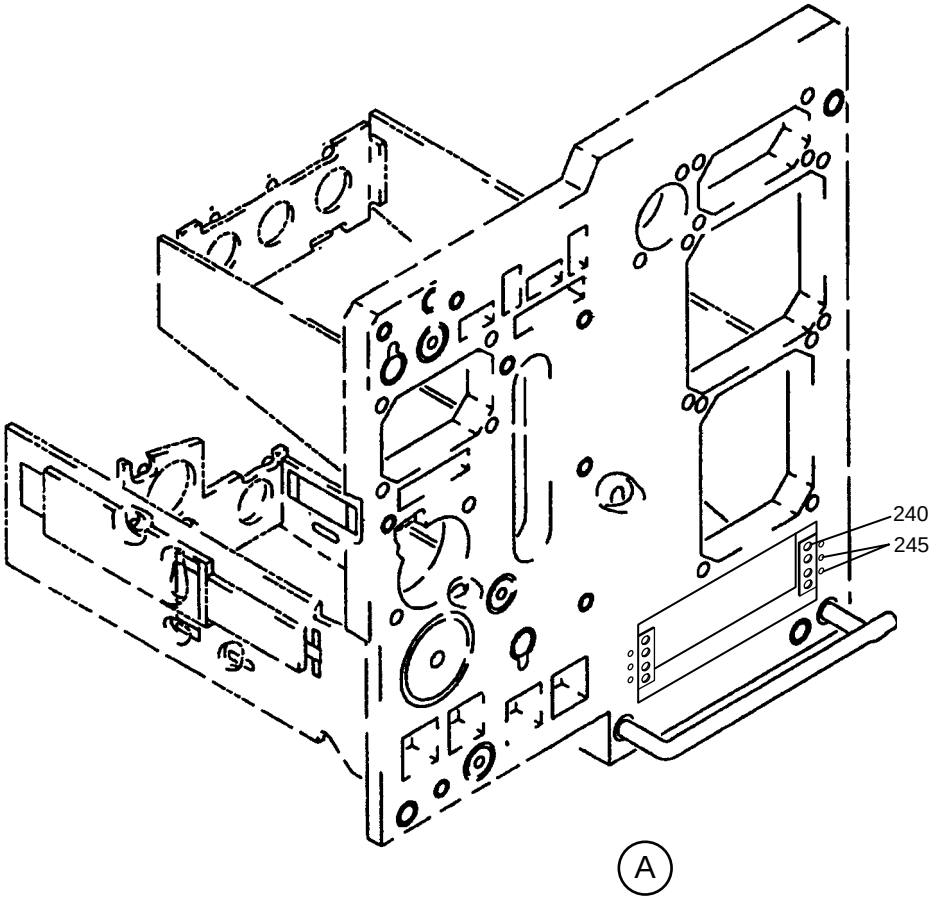

PWS757-008

PANEL INSTL-FIRST OFFICERS P3-1 FWD (INDICATING AND RECORDING ONLY)
FIGURE 29 (SHEET 2A)

FIG. ITEM	PART NUMBER	1 2 3 4 5 6 7 NOMENCLATURE	EFFECT FROM TO	UNITS PER ASSY
Supplement To 31-11-26-29.		Insert In Front Of Page 7.		
29 230	24014-001	• PANEL EGPWS ASSEMBLY SUPPLIER CODE: V75397 ELECTRICAL EQUIPMENT NUMBER: M9501 COMPONENT MAINTENANCE MANUAL: PS24014 FOR BREAKDOWN SEE: 34-46-51-01 ADDED PER HONEYWELL STC ST00381SE ----------*----------	002004 006010	RF
240	34-M757-109-5	• DZUS RAIL ATTACHING PARTS	002004 006010	2
245	CR3212-4-4	• RIVET ADDED PER HONEYWELL STC ST00381SE ----------*----------	002004 006010	6
- 250	T-187571	• FOAM CUSHION ADDED PER HONEYWELL STC ST00381SE ----------*----------	002004 006010	1

- ITEM NOT ILLUSTRATED

Supplement To 31-11-26-30. Insert In Front Of Page 0.

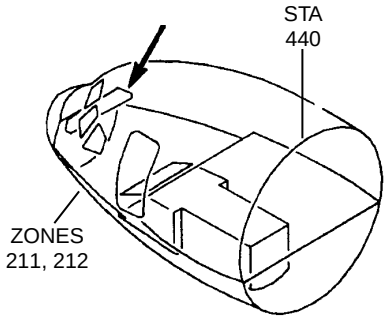

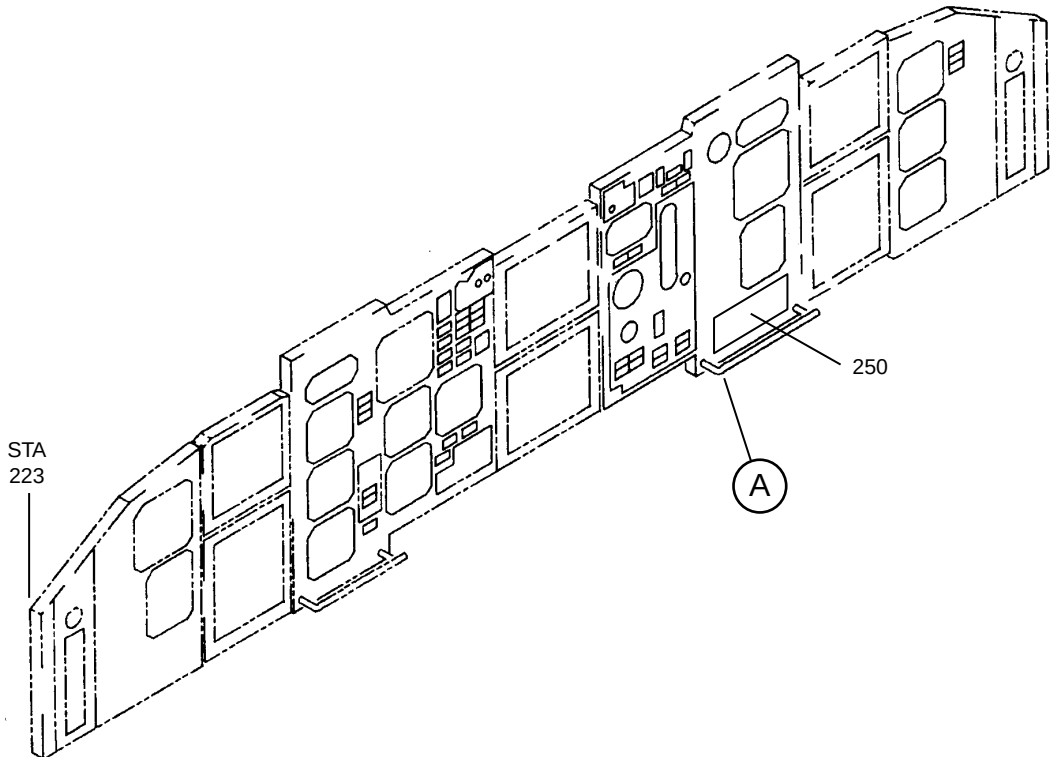

PWS757-009

PANEL INSTL-FIRST OFFCERS P3-1 FWD (INDICATING AND RECORDING ONLY)
FIGURE 30 (SHEET 1A)

Supplement To 31-11-26-30. Insert In Front Of Page 0A.

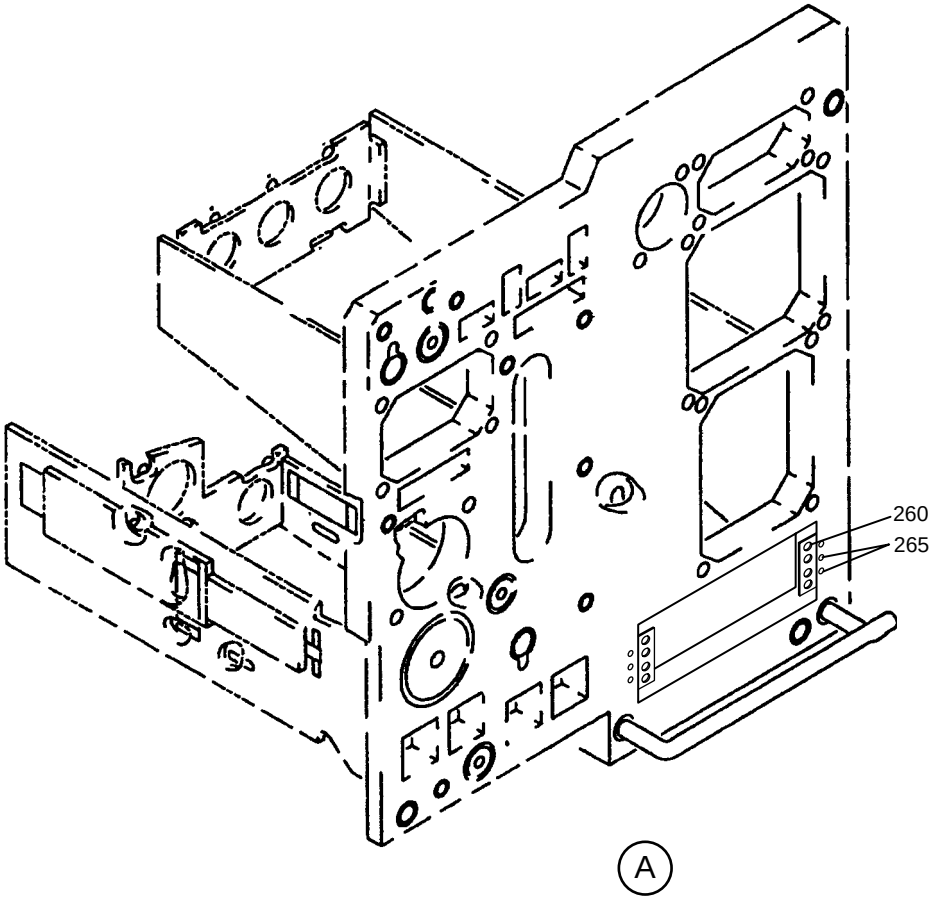

PWS757-010

PANEL INSTL-FIRST OFFCERS P3-1 FWD (INDICATING AND RECORDING ONLY)
FIGURE 30 (SHEET 2A)

FIG. ITEM	PART NUMBER	1 2 3 4 5 6 7 NOMENCLATURE	EFFECT FROM TO	UNITS PER ASSY
Supplement To 31-11-26-30.		Insert In Front Of Page 6.		
30 250	24014-001	• PANEL EGPWS ASSEMBLY SUPPLIER CODE: V75397 ELECTRICAL EQUIPMENT NUMBER: M9501 COMPONENT MAINTENANCE MANUAL: PS24014 FOR BREAKDOWN SEE: 34-46-51-02 ADDED PER HONEYWELL STC ST00381SE ----------*----------	011013 016018	RF
260	34-M757-109-5	• DZUS RAIL ATTACHING PARTS	011013 016018	2
265	CR3212-4-4	• RIVET ADDED PER HONEYWELL STC ST00381SE ----------*----------	011013 016018	6
- 270	T-187571	• FOAM CUSHION ADDED PER HONEYWELL STC ST00381SE ----------*----------	011013 016018	1

- ITEM NOT ILLUSTRATED

FIG. ITEM	PART NUMBER	1 2 3 4 5 6 7 NOMENCLATURE	EFFECT FROM TO	UNITS PER ASSY
Supplement To 31-11-41-01.		Insert In Front Of Page 2.		
1 5	622-5048-341	• PANEL ASSY-ELECTRONIC FLIGHT INSTR CONT SUPPLIER CODE: V4V792 SPECIFICATION NUMBER: S242T404-341 ELECTRICAL EQUIPMENT NUMBER: M00093 M00094 COMPONENT MAINT MANUAL REF: 34-22-72 QUALIFIED I/W DATA: 622-5048-101 I/W 622-5048-341 UNTIL WHEN THE TCAS SYSTEM IS ACTIVATED ON EFIS P/N 622-5048-341 MUST BE INSTALLED. 622-5048-344 I/W 622-5048-341 SUBJECT TO CUSTOMER PREFERENCE FOR UAL ONLY. EGPWS PANEL MODIFICATION- SUPPLIER CODE: V1UHX1 ALL AIRCRAFT INSTALLED WITH EGPWS MUST HAVE PANEL MODIFIED AS PER AEI DWG 34-757-107. FOR BREAKDOWN SEE: 34-22-02-01 ADDED PER HONEYWELL STC ST00381SE ----------*----------	002004 006013 016018	RF

- ITEM NOT ILLUSTRATED

FIG.	ITEM	PART NUMBER	DESCRIPTION	EFFECT FROM -TO	UNITS PER ASSY
1A			PANEL INSTL - P5 OVHD(INDICATING / RECORDING SYSTEM ONLY) MOD/757/1263 ISSUE: 1		RF
	* 295	233N3221-61	●PANEL ASSY – LIGHTING – CONT RPL BY 233N3221-104	001 - 010	1
	* 295	233N3221-104	●PANEL ASSY – LIGHTING – CONT RPLS 233N3221-61		1

* Not Illustrated

FIG.	ITEM	PART NUMBER	DESCRIPTION	EFFECT FROM -TO	UNITS PER ASSY
30A			PANEL INSTL - P5 OVHD(INDICATING / RECORDING SYSTEM ONLY) MOD/757/1263 ISSUE: 1		RF
	* 260	233N3221-61	●PANEL ASSY – LIGHTING – CONT RPL BY 233N3221-104	011 - 099	RF
	* 260	233N3221-104	●PANEL ASSY – LIGHTING – CONT RPLS 233N3221-61		RF

* Not Illustrated

FIG.	ITEM	PART NUMBER	DESCRIPTION	EFFECT FROM -TO	UNITS PER ASSY
54A			PANEL INSTL - P5 OVHD(INDICATING / RECORDING SYSTEM ONLY) MOD/757/1263 ISSUE: 1		RF
	* 265	233N3221-61	●PANEL ASSY – LIGHTING – CONT RPL BY 233N3221-104	101 - 899	RF
	* 265	233N3221-104	●PANEL ASSY – LIGHTING – CONT RPLS 233N3221-61		RF

* Not Illustrated

ILLUSTRATED PARTS CATALOGUE

FIG. ITEM	PART NUMBER	DESCRIPTION	EFFECT FROM -TO	UNITS PER ASSY
01		RECORDER AND SUPPORT INSTL-FLIGHT (INSTRUMENTS ONLY) MOD/757/1095 ISSUE:1A		
70	980-4100DXUN	. RECORDER ASSY-FLIGHT (RPL BY 980-4700-034)	002 - 004 006 - 016	1
70	980-4700-034	. RECORDER ASSY-FLIGHT (RPLS 980-4100DXUN)		1

* Not Illustrated

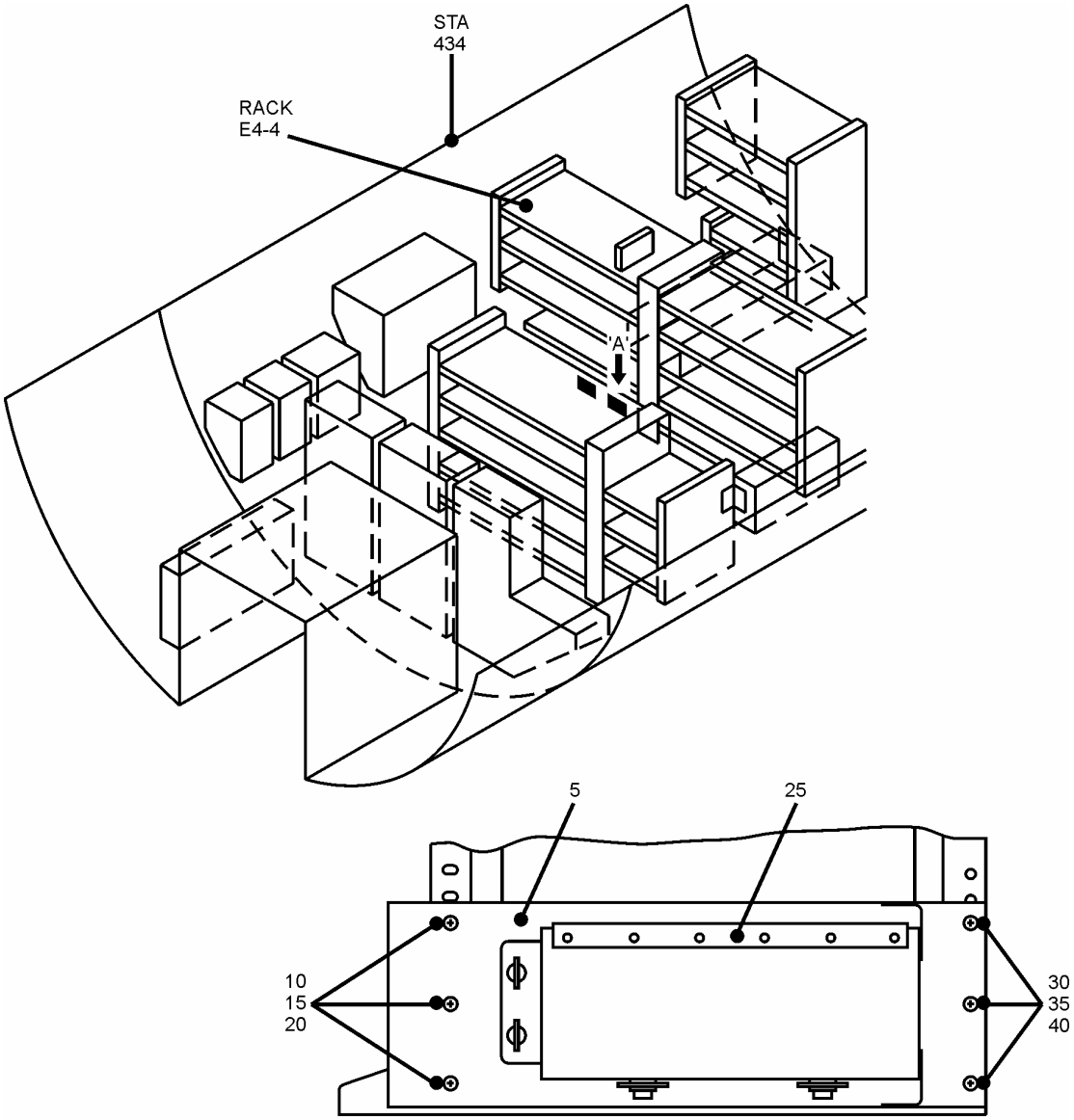

EQUIPMENT AND SOFTWARE INSTL-MAIN ELECTRONICS EQPT CTR (FLIGHT DATA RECORDER SYSTEM ONLY)
QUICK ACCESS RECORDING TAPE STOWAGE ASSEMBLY
FIGURE 2

FIG. ITEM	PART NUMBER	DESCRIPTION	EFFECT FROM -TO	UNITS PER ASSY
02		QUICK ACCESS RECORDING TAPE STOWAGE ASSEMBLY	003-004, 006-018	RF
		MOD/757/1081 ISSUE B		
5	284N1026-2	. TRAY, COVER	003-004, 006-018	1
		POST MOD 757/1081		
		Attaching Parts		
10	NAS1801-08-7	. SCREW , HEX. HEAD	003-004, 006-018	3
15	AN960JD8L	. WASHER, FLAT	003-004, 006-018	3
20	MS21042L08	. NUT, SELF LOCKING	003-004, 006-018	3
		* * *		
25	767-1382-000	. QAR STOWAGE ASSEMBLY	003-004, 006-018	1
		Attaching Parts		
30	NAS1801-3-8	. SCREW , HEX. HEAD	003-004, 006-018	3
35	AN960JD10L	. WASHER, FLAT	003-004, 006-018	3
40	MS21042L3	. NUT, SELF LOCKING	003-004, 006-018	3
		* * *		

* Not Illustrated

Britannia

757-204/236

PUBLICATION REVISION

ILLUSTRATED PARTS CATALOGUE

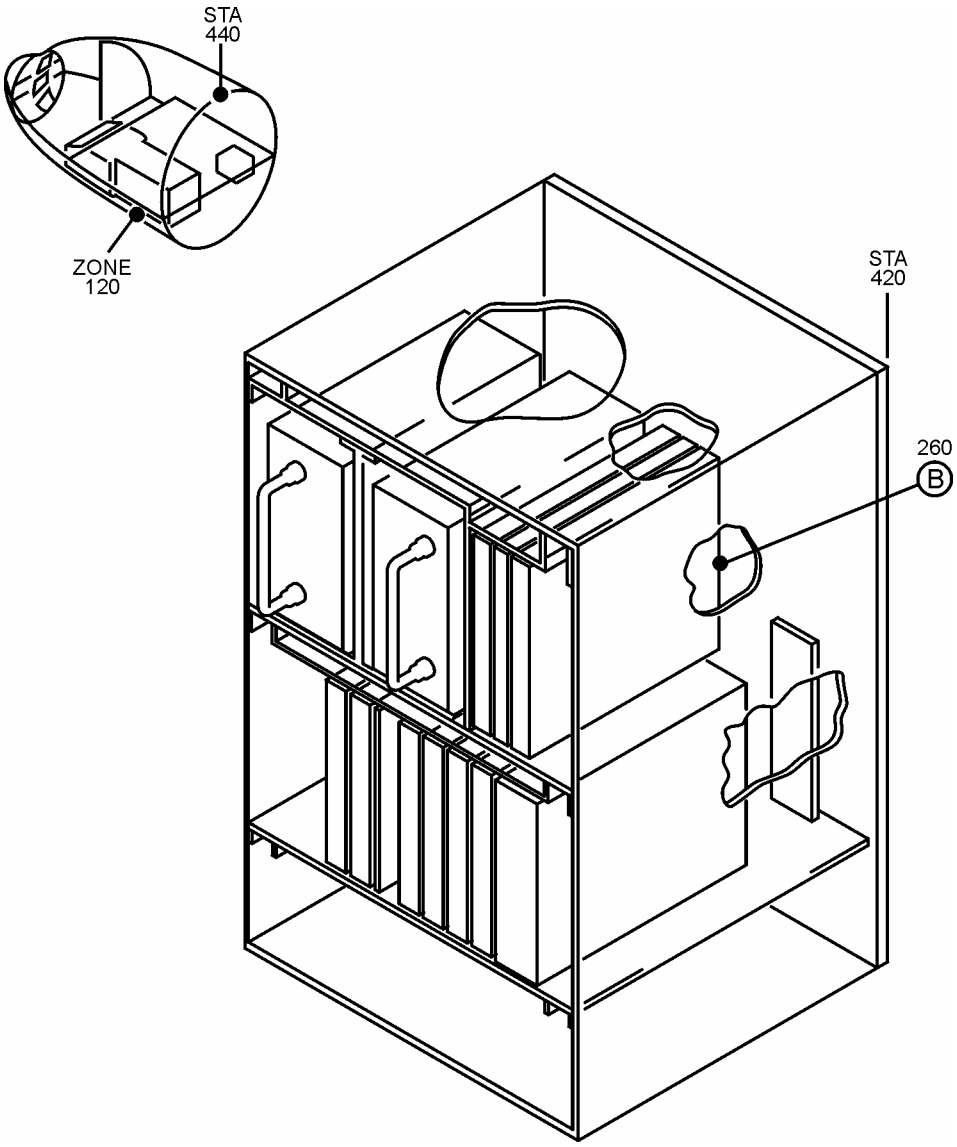

EQUIPMENT INSTL-MAIN ELECTRONICS EQPT CTR (WARNING SYSTEM ONLY)
FIGURE 1B (SHEET 1)

757-204/236

PUBLICATION REVISION

ILLUSTRATED PARTS CATALOGUE

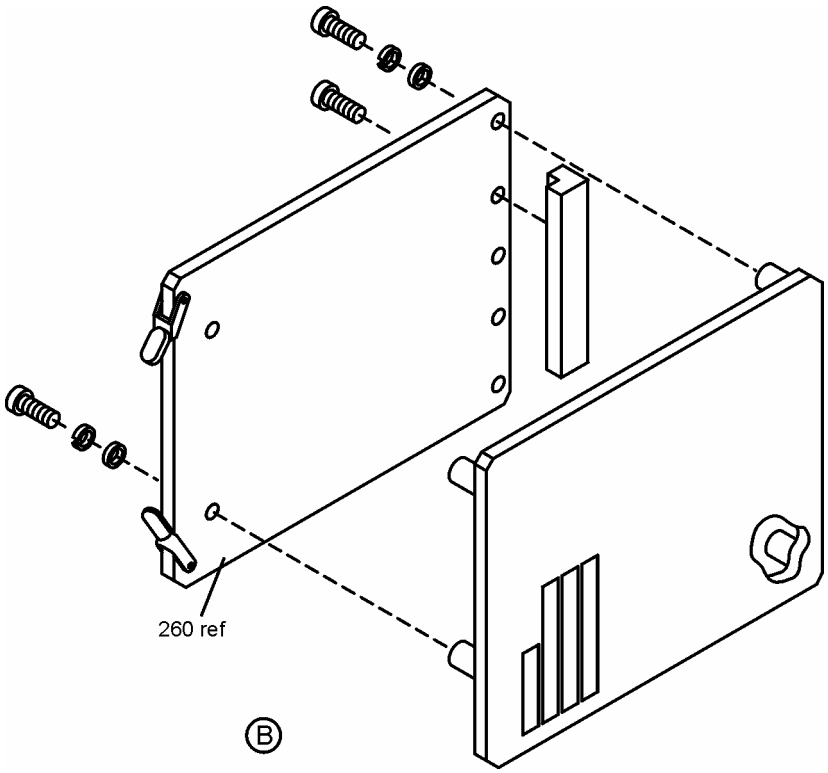

EQUIPMENT INSTL-MAIN ELECTRONICS EQPT CTR (WARNING SYSTEM ONLY)
FIGURE 1B (SHEET 2)

FIG. ITEM	PART NUMBER	DESCRIPTION	EFFECT FROM -TO	UNITS PER ASSY
1B		EQUIPMENT INSTL-MAIN ELECTRONICS EQPT CTR (WARNING SYSTEM ONLY) MOD/757/1030 ISSUE 1A	101, 102	RF
*2	2841800-140	EQUIPMENT INSTL-MAIN ELECTRONICS EQPT CTR (WARNING SYSTEM ONLY) FOR NHA/OTHER SYS DET SEE: 24-00-58-05E POST MOD 757/1030	101-101	RF
*3	2841800-141	EQUIPMENT INSTL-MAIN ELECTRONICS EQPT CTR (WARNING SYSTEM ONLY) FOR NHA/OTHER SYS DET SEE: 24-00-58-05E POST MOD 757/1030	102-102	RF

* Not Illustrated

FIG. ITEM	PART NUMBER	DESCRIPTION	EFFECT FROM -TO	UNITS PER ASSY
1B		EQUIPMENT INSTL-MAIN ELECTRONICS EQPT CTR (WARNING SYSTEM ONLY) MOD/757/1030 ISSUE 1A	101, 102	RF
260	285N0042-12	. PRINTED CIRCUIT ASSY- WEU DECISION HEIGHT ELECTRICAL EQUIPMENT NUMBER: M10423 COMPONENT MAINT MANUAL REF: 31-51-72 USED ON 284N1800-54 DELETED BY MOD 757/1030	101, 102	1

* Not Illustrated

757 Illustrated Parts Catalog (D6-49286-ATZ)
First Choice Airways Customisations Index
Chapter 31

-	-	NB322	NT404	NT406	NA443	NT245	NT246	NJ001	NJ002	NJ003	NJ004	NT405	NT407	NB506	NB507	NA346	NB329	NA352
Mod no.	**Title**	**G-CPEP**	**G-CPEU**	**G-CPEV**	**G-OOOC**	**G-OOBA**	**G-OOBB**	**G-OOBC**	**G-OOBD**	**G-OOBE**	**G-OOBF**	**G-OOBG**	**G-OOBH**	**G-OOBI**	**G-OOBJ**	**G-OOOK**	**GOOOX**	**GOOOZ**
BA T/R 31-576	Replacement of MCP	✓	-	-	-	-	-	-	-	-	-	-	-	-	-	-	-	-
BA T/R 31-577	The VHF controllers are replaced with the BA preferred fit	✓	-	-	-	-	-	-	-	-	-	-	-	-	-	-	-	-
BA T/R 31-578	FDR replacement	✓	-	-	-	-	-	-	-	-	-	-	-	-	-	-	-	-
BA T/R 31-579	Main instrument panels reworked to standadise to BA Fleet	✓	-	-	-	-	-	-	-	-	-	-	-	-	-	-	-	-
BA T/R 31-580	Pilots control stand P8 reworked to standardise BA Fleet	✓	-	-	-	-	-	-	-	-	-	-	-	-	-	-	-	-
BA T/R 31-581	The ASP is replaced with the BA preferred fit	✓	-	-	-	-	-	-	-	-	-	-	-	-	-	-	-	-
BA T/R 31-582	To bring Aural Warnings to CAA Standard. Mod 31G097 refers.	✓	-	-	-	-	-	-	-	-	-	-	-	-	-	-	-	-
BA T/R 31-583	To install the BA standard ASI. Mod 34G223 refers.	✓	-	-	-	-	-	-	-	-	-	-	-	-	-	-	-	-
BA T/R 31-584	EFIS reconfigured to BA standard. Mod 34G227 refers	✓	-	-	-	-	-	-	-	-	-	-	-	-	-	-	-	-
BA T/R 31-585	FMS - FMC and CDU Upgrade. Mod 34D289 refers	✓	-	-	-	-	-	-	-	-	-	-	-	-	-	-	-	-
BA T/R 31-590	To add QAR capability	✓	-	-	-	-	-	-	-	-	-	-	-	-	-	-	-	-
BA T/R 31-603	EOC-VAR-031G235 introduces new EICAS Software	✓	-	-	-	-	-	-	-	-	-	-	-	-	-	-	-	-
MON-757-746	Installation of wiring for ARINC reader	-	-	-	-	-	-	-	-	-	-	-	-	-	-	-	✓	-
MON-757-1231	Modify aural warning system to comply with CAA special conditions	-	-	-	-	-	-	-	-	-	-	-	-	-	-	-	✓	-
AES-757-790	Introduction of SSFDR	✓	-	-	✓	-	-	-	-	-	-	-	-	-	-	-	✓	✓
AES-757-148	DFDAU & Solid State FDR	-	-	-	-	-	-	-	-	-	-	-	-	-	-	✓	-	-
AES-757-318	FCA Fleet Std DFDR	-	-	-	-	-	-	-	-	-	-	-	-	✓	✓	-	-	-

FIG.	ITEM	PART NUMBER	DESCRIPTION	UNITS PER ASSY
1	20	285T0385-6	Chime/Bell Aural Module.	1

FIG.	ITEM	PART NUMBER	DESCRIPTION	UNITS PER ASSY
1		285N0041-10 (285N0041-6)	Clacker Wailer Aural Module - Left.	1
1		285N0041-10 (285N0041-6)	Clacker Wailer Aural Module - Right.	1
1		285N0042-12	Decision Height Aural Module.	1
		P/N 285N0041-6 IS ALTERNATIVE TO P/N 285N0041-10.		

Monarch *BOEING 757*

AIR 2000

757-2Y0

PARTS CATALOGUE

CHAPTER 31 - INSTRUMENTS

FIG.	ITEM	PART NUMBER	DESCRIPTION	QTY PER AIRCRAFT
1	-	UT 1329	Buffer Box	1
		CONSISTING OF PART NUMBERS:		
	(-	TYPE K2	Die Cast Box	1)
	(-	MS3122-12-3S	Plug	1)
	(-	MS3120-14-19P	Plug	1)
	(-	600115-12-12	Protective Cover C/W Chain & Eyelet	1)
	(-	TYPE C120	Tag Strip (5 Way)	1)
	(-	TYPE TR5	Resistor 1K	2)
	(-	6BA X ¼" RH HD	Screw	4)
	(-	6BA X ⅜" RD HD	Screw	8)
	(-	M3 X 10 CSK HD	Screw	1)
	(-	BACS21DD1B	Fasteners	4)
	(-	2024T3 X 0.030"	Aluminium	As Req'd)

EFFECTIVITY

G-OOOU & G-OOOX.

)DIFICATION MON/757/746.

BOEING 757

Parts Catalog (Maintenance)

CHAPTER 31 - INDICATING AND RECORDING

AIR 2000 CUSTOMISATIONS NB322

A. File the attached Temporary Revision/Alerts in the Manual Supplement in ATA Chapter/Section/Subject/Page sequence

B. File this Control Page in front of the Chapter TRs/Alerts.

C. The following list shows active TRs/Alerts together with TRs/Alerts added by this control page.

Chapter Section Subject	Page	TR/Alert No.
31-11-00-01	1	31-580
31-11-01-01	1	31-576
31-11-01-01	1	31-579
31-11-01-01	1	31-583
31-11-05-47	1	31-577
31-11-05-47	1	31-584
31-11-05-47	1	31-585
31-14-20-03	1	31-581
31-31-01-01	1	31-578
31-31-03-01	1	31-590
31-41-02-01	2	* 31-603
31-51-03-01	1	31-582

D. Remove and Destroy the following TRs/Alerts:

31-41-02-01	3	31-594

* Indicates TRs/Alerts issued with this control page

ATP TEMPORARY REVISION

BRITISH AIRWAYS

B757 **NB322**

21 August, 1997

ILLUSTRATED PARTS CATALOGUE

TEMPORARY REVISION No. 31-580

THIS TEMPORARY REVISION IS ISSUED BY BRITISH AIRWAYS ENGINEERING (TECHNICAL INFORMATION SERVICES, G2, TBA, S401, P. O. BOX 10, HEATHROW AIRPORT, HOUNSLOW, MIDDLESEX TW6 2JA) AND COMPLIES WITH BCAR'S CHAPTER A5-3, B5-3 AND/OR TSS No. 0-2 AS REQUIRED. CAA DESIGN APPROVAL No. DAI/8566/78.

For CHIEF ENGINEER QUALITY AND TRAINING

Manual Reference 31-11-00-01 Page 1

REASON FOR REVISION

Pilots control stand P8 reworked to standardise BA Fleet.

ACTION

Fig Item		Part Number	Nomenclature	Effect	Units/ Assy
1	1	5051-1-5	.AUDIO SELECTOR	002002	2
	2	G6317	.VHF CONTROL PANEL	"	3
	3	G6990-24	.ATC CONTROL PANEL	"	1
	4	285T0557-1	.DUAL ADF CONTROL PANEL	"	1
	5	BACP10U0112T	.PANEL ASSY. 1-1/8"	"	1
	6	BACP10U0150T	.PANEL ASSY. 1-1/2"	"	1
	7	BACP10U0412T	.PANEL ASSY. 4-1/8"	"	1
	8	BACP10U0450T	.PANEL ASSY. 4-1/2"	"	1

See Figure 1.

Originator: C L ANSTEY
Reference: 39G002
Workbook: CV 39-10

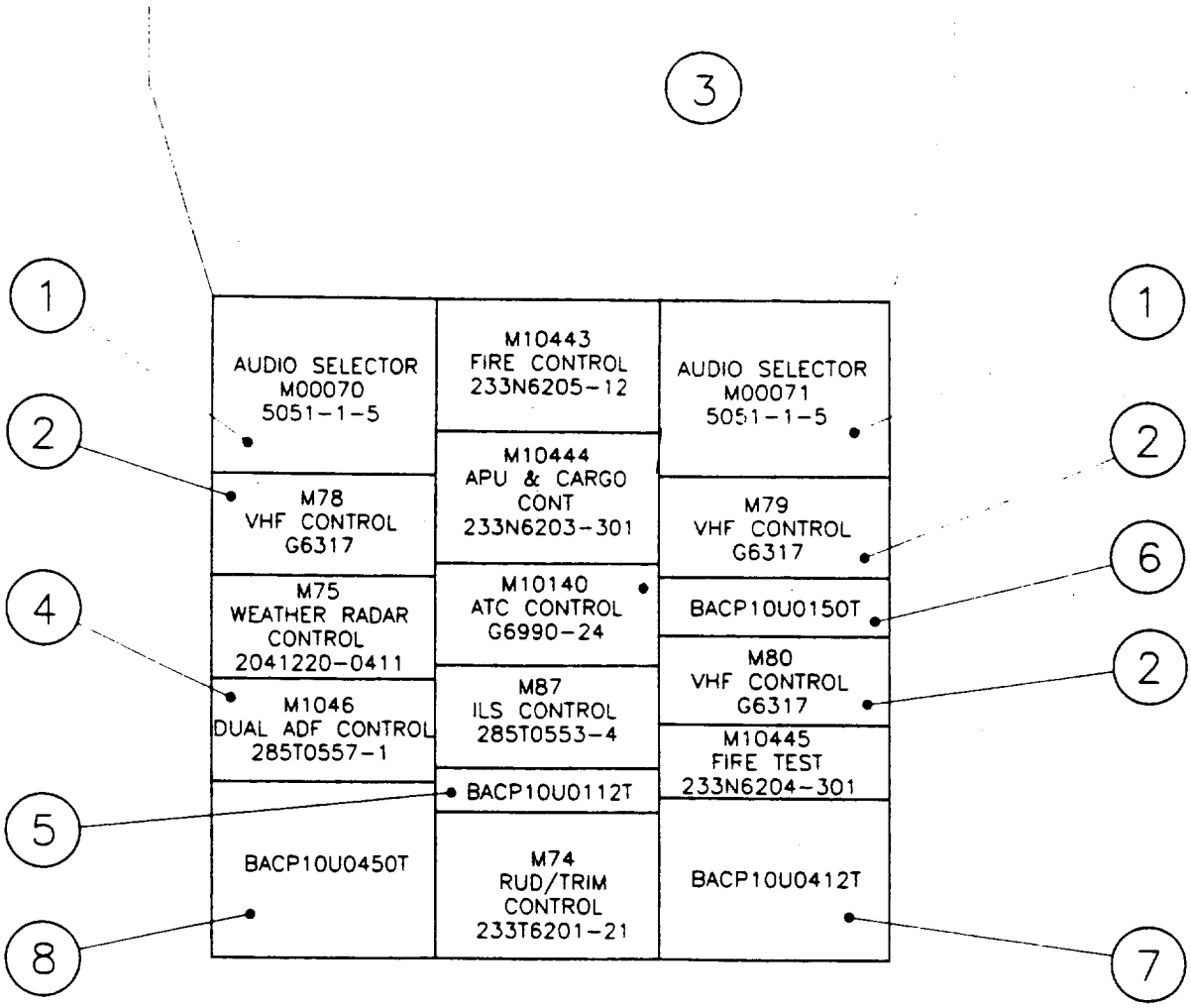

PILOTS AFT CONTROL STAND P8

FIGURE 1

ATP TEMPORARY REVISION

BRITISH AIWAYS

B757 **(NB322)**

10 August, 1997

ILLUSTRATED PARTS CATALOGUE

TEMPORARY REVISION No. 31-576

THIS TEMPORARY REVISION IS ISSUED BY BRITISH AIRWAYS ENGINEERING (TECHNICAL INFORMATION SERVICES, G2, TBA, S401, P. O. BOX 10, HEATHROW AIRPORT, HOUNSLOW, MIDDLESEX TW6 2JA) AND COMPLIES WITH BCAR'S CHAPTER A5-3, B5-3 AND/OR TSS No. 0-2 AS REQUIRED. CAA DESIGN APPROVAL No. DAI/8566/78.

For CHIEF ENGINEER QUALITY AND TRAINING

Manual Reference 31-11-01-01 Page 1

REASON FOR REVISION

Replacement of MCP

ACTION

Fig Item	Part Number	Nomenclature	Effect	Units/ Assy
1 75	622-5391-002	PANEL ASSY-MODE CONT (M00090) replaces P/N 622-4717-003 after MOD 22F094	002	1

Originator: P J ROPER
Reference: 22F094
Workbook: CV 22-30

ATP TEMPORARY REVISION

BRITISH AIRWAYS

B757 **NB322**

21 August, 1997

ILLUSTRATED PARTS CATALOGUE

TEMPORARY REVISION No. 31-579

THIS TEMPORARY REVISION IS ISSUED BY BRITISH AIRWAYS ENGINEERING (TECHNICAL INFORMATION SERVICES, G2, TBA, S401, P. O. BOX 10, HEATHROW AIRPORT, HOUNSLOW, MIDDLESEX TW6 2JA) AND COMPLIES WITH BCAR'S CHAPTER A5-3, B5-3 AND/OR TSS No. 0-2 AS REQUIRED. CAA DESIGN APPROVAL No. DAI/8566/78.

For CHIEF ENGINEER QUALITY AND TRAINING

Manual Reference 31-11-01-01 Page 1

REASON FOR REVISION

Main instrument panels reworked to standardise to BA Fleet.

ACTION

Fig Item	Part Number	Nomenclature	Effect	Units/ Assy
01 90	622-5990-302	.INDICATOR ASSY-DUAL/DME REPLACES P/N 622-5001-109 AFTER MOD 39G001.	002002	2
01 105	622-5374-003	.ANNUNCIATOR-AUTO. LDG STATUS REPLACES P/N 622-5374-002 AFTER MOD 39G001.	002002	2

Originator: C L ANSTEY
Reference: 39G001
Workbook: CV 39-12

ATP TEMPORARY REVISION

BRITISH AIRWAYS

B757 **(NB322)**

24 August, 1997

ILLUSTRATED PARTS CATALOGUE

TEMPORARY REVISION No. 31-583

THIS TEMPORARY REVISION IS ISSUED BY BRITISH AIRWAYS ENGINEERING (TECHNICAL INFORMATION SERVICES, G2, TBA, S401, P. O. BOX 10, HEATHROW AIRPORT, HOUNSLOW, MIDDLESEX TW6 2JA) AND COMPLIES WITH BCAR'S CHAPTER A5-3, B5-3 AND/OR TSS No. 0-2 AS REQUIRED. CAA DESIGN APPROVAL No. DAI/8566/78.

For CHIEF ENGINEER QUALITY AND TRAINING

Manual Reference 31-11-01-01 Page 1

REASON FOR REVISION

To install the BA standard ASI. Mod 34G223refers.

ACTION

Fig	Item	Part Number	Nomenclature	Effect	Units/ Assy
1	130	A3615710070BA	.INDICATOR-STBY AIRSPEED (N0022) replaces P/N A3615710067 after Mod 34G223	002002	1

Originator: RICHARD KINNELL
Reference: 34G223
Workbook: CV 34-205

ATP TEMPORARY REVISION

BRITISH ARWAYS

B757 **(NB322)**

12 August, 1997

ILLUSTRATED PARTS CATALOGUE

TEMPORARY REVISION No. 31-577

THIS TEMPORARY REVISION IS ISSUED BY BRITISH AIRWAYS ENGINEERING (TECHNICAL INFORMATION SERVICES, G2, TBA, S401, P. O. BOX 10, HEATHROW AIRPORT, HOUNSLOW, MIDDLESEX TW6 2JA) AND COMPLIES WITH BCAR'S CHAPTER A5-3, B5-3 AND/OR TSS No. 0-2 AS REQUIRED. CAA DESIGN APPROVAL No. DAI/8566/78.

For CHIEF ENGINEER QUALITY AND TRAINING

Manual Reference 31-11-05-47 Page 1

REASON FOR REVISION

The VHF controllers are replaced with the BA preferred fit.

ACTION

Fig	Item	Part Number	Nomenclature	Effect	Units/ Assy
47	30	G6317-03	.PANEL ASSY-VHF CONT REPLACES P/N 622-6831-002 AFTER EOC-757-023G270	002	3

Originator: D L ROSE
Reference: EOC-757-023G270
Workbook: CV 23-378

ATP TEMPORARY REVISION

BRITISH AIRWAYS

B757 **(NB322)**

24 August, 1997

ILLUSTRATED PARTS CATALOGUE

TEMPORARY REVISION No. 31-584

THIS TEMPORARY REVISION IS ISSUED BY BRITISH AIRWAYS ENGINEERING (TECHNICAL INFORMATION SERVICES, G2, TBA, S401, P. O. BOX 10, HEATHROW AIRPORT, HOUNSLOW, MIDDLESEX TW6 2JA) AND COMPLIES WITH BCAR'S CHAPTER A5-3, B5-3 AND/OR TSS No. 0-2 AS REQUIRED. CAA DESIGN APPROVAL No. DAI/8566/78.

For CHIEF ENGINEER QUALITY AND TRAINING

Manual Reference 31-11-05-47 Page 1

REASON FOR REVISION

EFIS reconfiguration to BA standard.. Mod 34G227 refers.

ACTION

Fig	Item	Part Number	Nomenclature	Effect	Units/ Assy
1	15	622-5048-344	.PANEL ASSY -ELECTRONIC FLIGHT INSTR CONT (M00093, M00094) replaces 622-5048-341 after Mod 34G227	002002	2

Originator: A GRAHAM
Reference: 34G227
Workbook: CV 34-202

ATP TEMPORARY REVISION

BRITISH AIRWAYS

B757 **(NB322)**

ILLUSTRATED PARTS CATALOGUE

24 August, 1997

TEMPORARY REVISION No. 31-585

THIS TEMPORARY REVISION IS ISSUED BY BRITISH AIRWAYS ENGINEERING (TECHNICAL INFORMATION SERVICES, G2, TBA, S401, P. O. BOX 10, HEATHROW AIRPORT, HOUNSLOW, MIDDLESEX TW6 2JA) AND COMPLIES WITH BCAR'S CHAPTER A5-3, B5-3 AND/OR TSS No. 0-2 AS REQUIRED. CAA DESIGN APPROVAL No. DAI/8566/78.

For CHIEF ENGINEER QUALITY AND TRAINING

Manual Reference 31-11-05-47 Page 1

REASON FOR REVISION

FMS - FMC AND CDU UPGRADE. Mod 34D289 refers.

ACTION

Fig Item	Part Number	Nomenclature	Effect	Units/ Assy
47 5	4058650-930	.PANEL ASSY- HMCDU (M00076 & M00077) REPLACES P/N 4038170-905 AFTER MOD 34D289	002002	2

Originator: H WATE
Reference: 34D289
Workbook: CV 34-210

ATP TEMPORARY REVISION

BRITISH AIRWAYS

B757 **(NB322)**

13 August, 1997

ILLUSTRATED PARTS CATALOGUE

TEMPORARY REVISION No. 31-581

THIS TEMPORARY REVISION IS ISSUED BY BRITISH AIRWAYS ENGINEERING (TECHNICAL INFORMATION SERVICES, G2, TBA, S401, P. O. BOX 10, HEATHROW AIRPORT, HOUNSLOW, MIDDLESEX TW6 2JA) AND COMPLIES WITH BCAR'S CHAPTER A5-3, B5-3 AND/OR TSS No. 0-2 AS REQUIRED. CAA DESIGN APPROVAL No. DAI/8566/78.

For CHIEF ENGINEER QUALITY AND TRAINING

Manual Reference 31-14-20-03 Page 1

REASON FOR REVISION

The ASP is replaced with the BA preferred fit.

ACTION

Fig Item	Part Number	Nomenclature	Effect	Units/ Assy
03 140	5051-1-3	.PANEL ASSY AUDIO SELECTOR (M00070) REPLACES P/N DE394-10/20 AFTER MOD 23D175.	002	RF

Originator: E Hoare
Reference: 23D175
Workbook: CV 23-373

ATP TEMPORARY REVISION

BRITISH ARWAYS

B757 **NB322**

18 August, 1997

ILLUSTRATED PARTS CATALOGUE

TEMPORARY REVISION No. 31-578

THIS TEMPORARY REVISION IS ISSUED BY BRITISH AIRWAYS ENGINEERING (TECHNICAL INFORMATION SERVICES, G2, TBA, S401, P. O. BOX 10, HEATHROW AIRPORT, HOUNSLOW, MIDDLESEX TW6 2JA) AND COMPLIES WITH BCAR'S CHAPTER A5-3, B5-3 AND/OR TSS No. 0-2 AS REQUIRED. CAA DESIGN APPROVAL No. DAI/8566/78.

For CHIEF ENGINEER QUALITY AND TRAINING

Manual Reference 31-31-01-01 Page 1

REASON FOR REVISION

FDR Replacement

ACTION

Fig	Item	Part Number	Nomenclature	Effect	Units/ Assy
01	70	980-4700-033	.RECORDER ASSY-FLIGHT replaces P/N 980-4100DXUN AFTER MOD 31G094	002	1

Originator: M HANIM
Reference: 31G094
Workbook: CV 31-93

ILLUSTRATED PARTS CATALOGUE

TEMPORARY REVISION No. 31-590

THIS TEMPORARY REVISION IS ISSUED BY BRITISH AIRWAYS ENGINEERING (TECHNICAL INFORMATION SERVICES, G2, TBA, S401, P. O. BOX 10, HEATHROW AIRPORT, HOUNSLOW, MIDDLESEX TW6 2JA) AND COMPLIES WITH BCAR'S CHAPTER A5-3, B5-3 AND/OR TSS No. 0-2 AS REQUIRED. CAA DESIGN APPROVAL No. DAI/8566/78.

For CHIEF ENGINEER QUALITY AND TRAINING

Manual Reference 31-31-03-01 Page 1

REASON FOR REVISION

To add QAR capability.

ACTION

Read the following for the Quick Access Recorder system:-

24	66-18178-1	BONDING STRAP	1
23	MS21042L3	NUT 10-32UNF	4
22	AN960JD10L	WASHER 10UN	4
21	NAS1801-3-8	SCREW 10-32UNF HEX.HD	4
18	NAS1801-08-6	SCREW HEX.HD 8-32UNC	
17	284T0032-2	COVER - TRAY	1
16	284T0383-3	SEAL - TRAY	A/R
15	MS21042L08	NUT 8-32UNF	4
14	AN960JD8L	WASHER 8UN	4
13	NAS514P832-6P	SCREW CSK.HD 8-32 UNC	2
12	284T0026-18	TRAY	1
11	MS21042L06	NUT LOCKING 6-32UNC	4
10	NAS1801-06-11	SCREW 6-32UNC	4
8	DC300XL/P	QAR TAPE	1
7	BAC27NEX1114	DECAL, CONNECTOR	1
6	BACC66H21C5001	CONNECTOR	1
5	BAC27NEX1117	DECAL, QAR	1
4	D51442	QUICK ACCESS RECORDER	1

A/C NB322

B757

ILLUSTRATED PARTS CATALOGUE

TEMPORARY REVISION No. 31-590 (Cont'd)

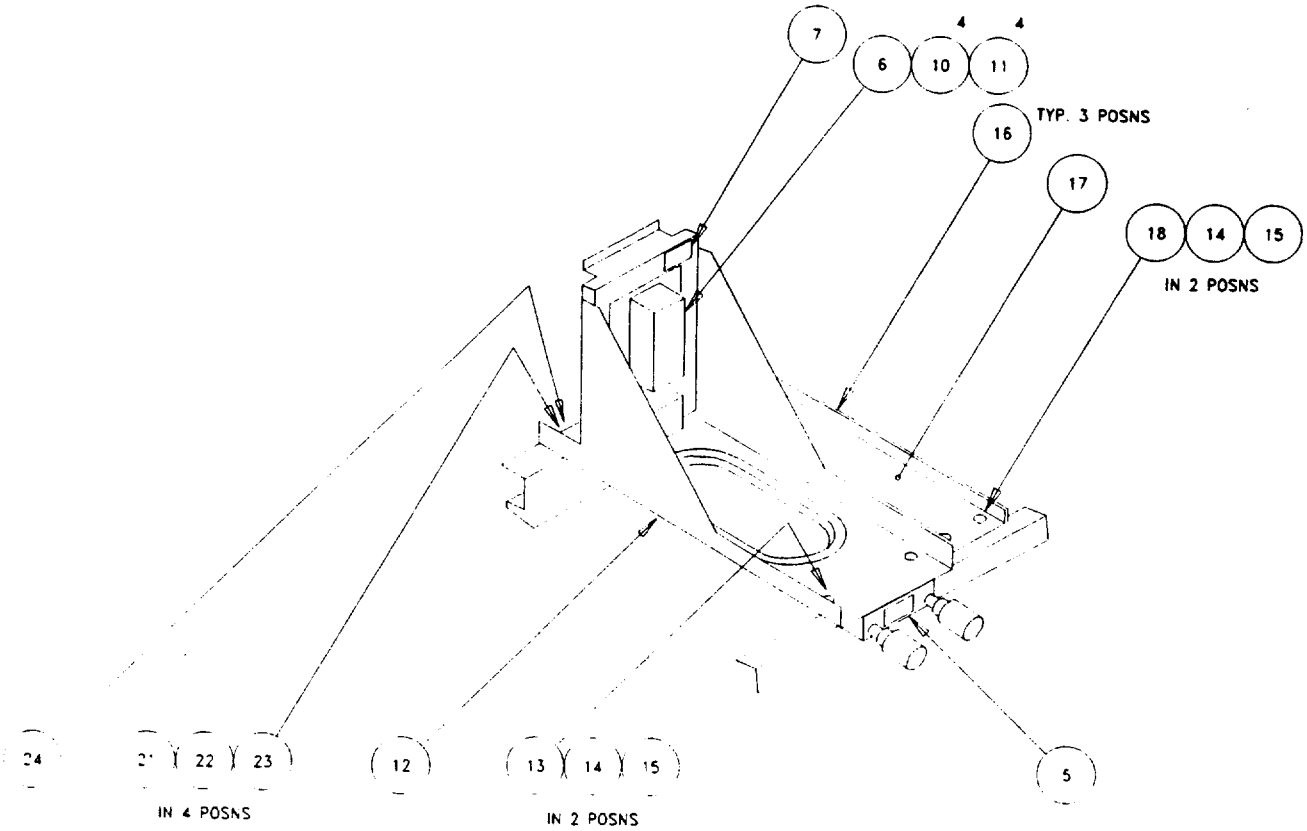

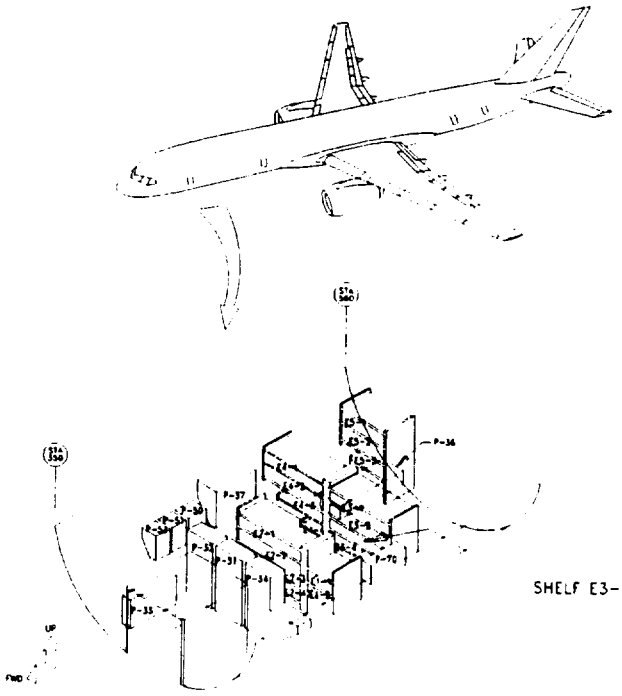

ELECTRONICS BAY

ILLUSTRATED PARTS CATALOGUE

TEMPORARY REVISION No. 31-603

THIS TEMPORARY REVISION IS ISSUED BY BRITISH AIRWAYS ENGINEERING (TECHNICAL INFORMATION SERVICES, G2, TBA, S401, P. O. BOX 10, HEATHROW AIRPORT, HOUNSLOW, MIDDLESEX TW6 2JA).
CAA DESIGN APPROVAL No. DAI/8566/78.

Manual Reference 31-41-02-01 Page 2

REASON FOR REVISION

EOC-VAR-031G235 introduces new EICAS Software.

Please refer to the following revised IPC:

Fig Item	Part Number	Nomenclature	Effect	Units/ Assy
1				
7	822-1033-100	.COMPUTER-EICAS SUPPLIER CODE: V4V792 SPECIFICATION NUMBER: S242N701-1001 ELECTRICAL EQUIPMENT NUMBER: M10181,M10182 POST AIRLINE MOD: EOC-VAR-031G140	002002	2
-15	3170-COL-DE0-03	.SOFTWARE-EICAS OPS SUPPLIER CODE: V4V792 MISCELLANEOUS DATA: DISKETTE QTY: 1 DISK USED WITH: 822-1033-100 FOR SPARES PROCURE: 831-4565-102 POST AIRLINE MOD: EOC-VAR-031G235	002002	2
-20	310F-BCG-00M-42	.SOFTWARE-EICAS OPC SUPPLIER CODE: V81205 MISCELLANEOUS DATA: DISKETTE QTY: 1 DISK USED WITH: 822-1033-100 FOR SPARES PROCURE: 242N7010-2162 POST AIRLINE MOD: EOC-VAR-031G140	002002	2

- ITEMS NOT ILLUSTRATED

Originator: T. D'Arcy
Reference: 6307
Workbook: JS 31-042

ATP TEMPORARY REVISION

BRITISH AIRWAYS

B757 **(NB322)**

24 August, 1997

ILLUSTRATED PARTS CATALOGUE

TEMPORARY REVISION No. 31-582

THIS TEMPORARY REVISION IS ISSUED BY BRITISH AIRWAYS ENGINEERING (TECHNICAL INFORMATION SERVICES, G2, TBA, S401, P. O. BOX 10, HEATHROW AIRPORT, HOUNSLOW, MIDDLESEX TW6 2JA) AND COMPLIES WITH BCAR'S CHAPTER A5-3, B5-3 AND/OR TSS No. 0-2 AS REQUIRED. CAA DESIGN APPROVAL No. DAI/8566/78.

For CHIEF ENGINEER QUALITY AND TRAINING

Manual Reference 31-51-03-01 Page 1

REASON FOR REVISION

To bring Aural Warnings to CAA Standard, Mod 31G097 refers.

ACTION

Fig Item	Part Number	Nomenclature	Effect	Units /Assy
1 4	285T0030-17	.PRINTED CIRCUIT ASSY-PRINTED CIRCUIT ASSY ALTITUDE ALERT (M00617) REF CMM 34-16-51 replaces P/N 285T0030-14 after Mod 31G097	002002	001
20	285T0385-6	.MODULE ASSY-MODULE ASSY-WARNING ELECTRONICS UNIT BELL CHIMES (M01000) REF CMM 31-51-10 replaces P/N285T0385-5 after Mod 31G097	"	001
145	285N0042-12	.PRINTED CIRCUIT ASSY-PRINTED CIRCUIT ASSY-WEU DECISION HEIGHT (M10423) REF CMM 31-51-72 after Mod 31G097	"	001
135	285N0041-10	.PRINTED CIRCUIT ASSY-PRINTED CIRCUIT ASSY- CLACKER WAILER (M10421, M10422) REF CMM 31-51-71 after Mod 31G097	"	002

Originator: RICHARD KINNELL
Reference: 31G097
Workbook: CV 31-97

BRITISH AIRWAYS
(NB322)
ILLUSTRATED PARTS CATALOGUE
TEMPORARY REVISION No. 31-582 (Cont'd)

--

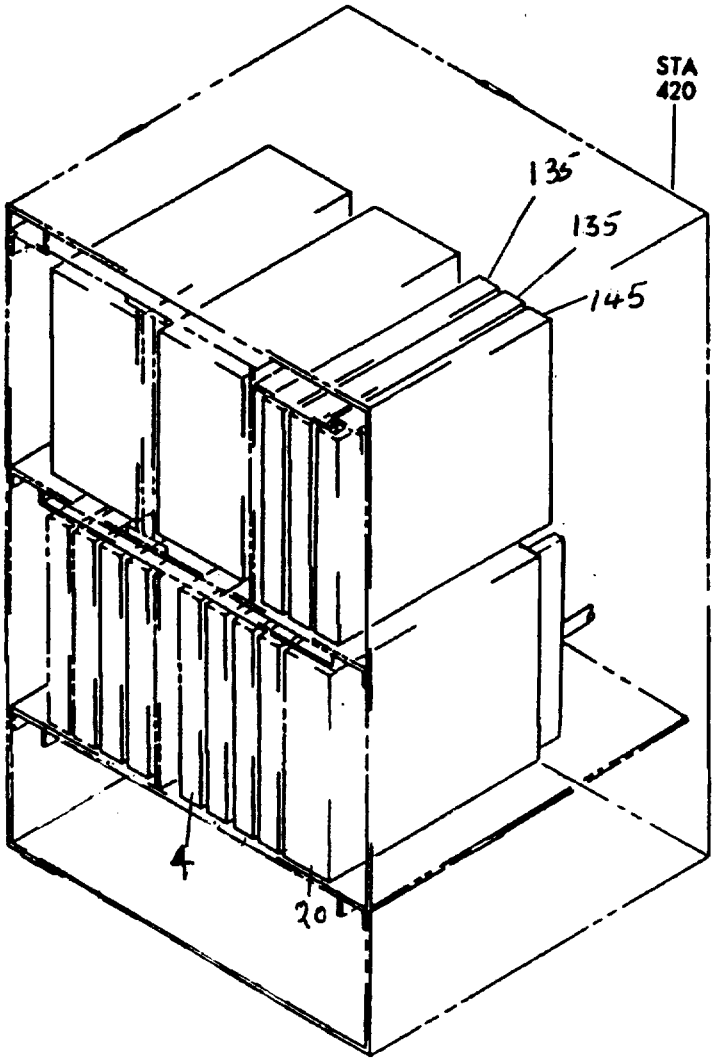

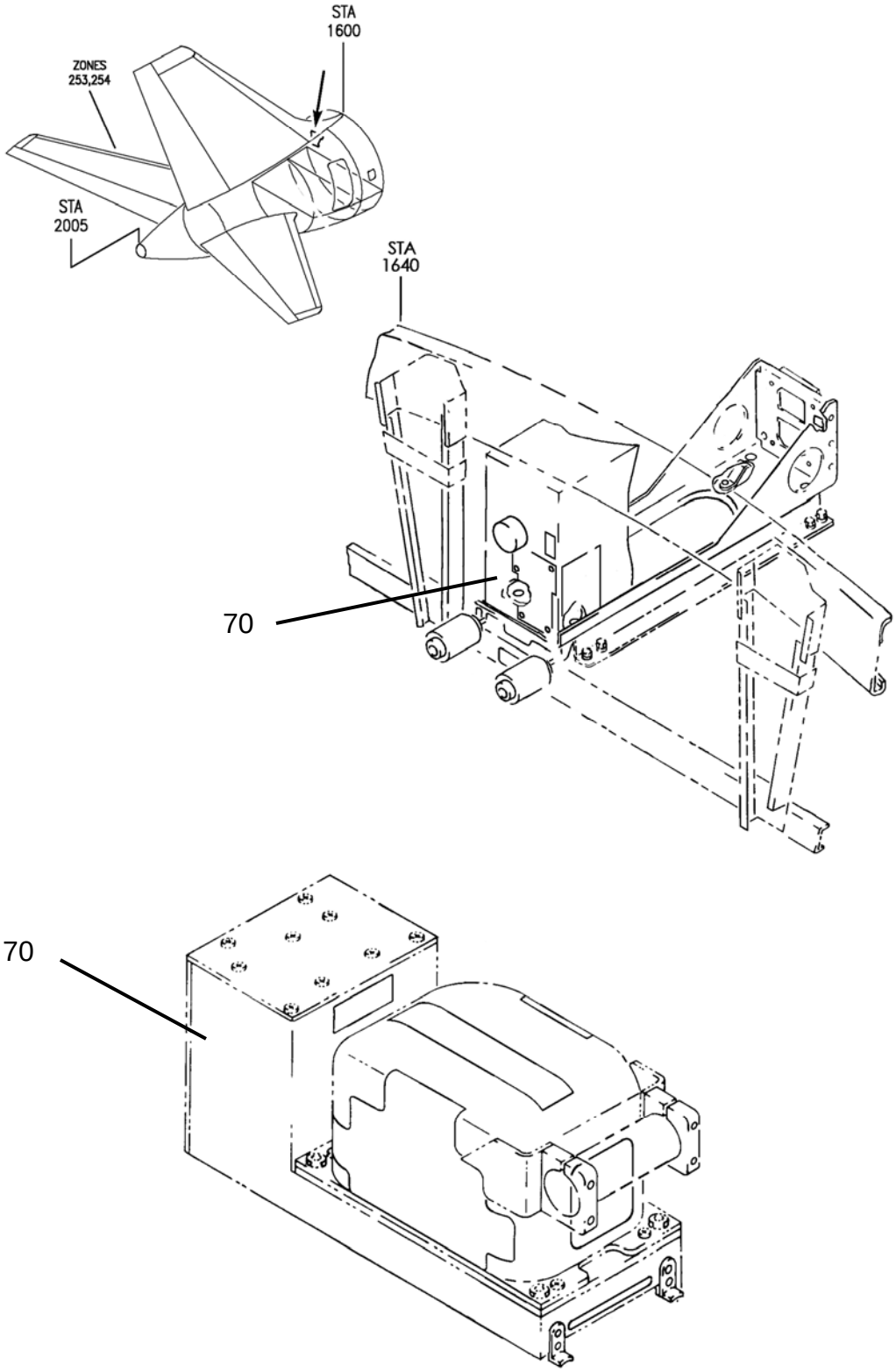

EQUIPMENT INST – E7 (FLIGHT DATA RECORDER ONLY) FIGURE 1

FIG ITEM	PART NUMBER	NOMENCLATURE	EFFECT FROM TO	UNITS PER ASSY
1		EQUIPMENT INST – E7 (FLIGHT DATA RECORDER ONLY) FIGURE 1	003, 009, 121, 952	
		MODIFICATION AES-757-790		
70	980-4100DXUN	.RECORDER ASSY-DIGITAL FLIGHT (RPL BY 980-4700-042)	009, 121, 952	1
70	980-4100DXUS	.RECORDER ASSY-DIGITAL FLIGHT (RPL BY 980-4700-042)	003	1
70	980-4700-042	.RECORDER-FLIGHT DATA DIGITAL (CUSTOMER FURNISHED) (STATIC SENSITIVE PART) SUPPLIER CODE: V97896 FUNCTIONAL DESCRIPTION: RECORDS SELECTED PARAMETERS FROM VARIOUS AIRPLANE SYSTEMS AND SENSORS USING SOLIDSTATE MEMORY ELECTRICAL EQUIP NUMBER: M00200 COMPONENT MAINT MANUAL REF: 31-30-40	003, 009 121, 952	1

AES Limited

PUBLICATION REVISION

Document No. AES-TP-0027

TRANSMITTAL SHEET
THE TECHNICAL INFORMATION CONTAINED IN THIS DOCUMENT HAS BEEN APPROVED UNDER THE AUTHORITY OF EASA DESIGN ORGANISATION APPROVAL No. EASA.21J.036

Project Number: 0906
Document Release Note Number: 2565
Issue Number: 2

Reason for Issue: **To introduce the supplements to the aircraft technical publications which are listed and described in the introduction to this transmittal.**

AIRCRAFT TECHNICAL PUBLICATION SUPPLEMENT - CERTIFICATION

Manual & Chapter	*Prepared by*	*Responsible for design*	*Date*	*Compliance Verification Engineer / Approval*		
				Stress	*Design*	*Systems*
Aircraft Maintenance Manual **31-31**	T N Gaunt		8-11-07			
Wiring Diagram Manual **31-31**	T N Gaunt		08-11-07			
31-51	T N Gaunt		08-11-07			
34-45	T N Gaunt		08/11/07			
Illustrated Parts Catalog **31-31**	T N Gaunt		08-11-07			

EFFECTIVITY

27146 (NB506), 27147 (NB507)

TRANSMITTAL

INTRODUCTION - GENERAL

1 These modifications cover the Introduction of a digital flight data acquisition unit and a solid state flight data recorder to the subject aircraft. This is under cover of AES modification AES-757-148.

2 Details of the changes in the document at this revision are given in the HIGHLIGHTS page(s) of the supplement for the applicable manual.

3 The only technical publications which are affected and which should be used with this supplement are the:

- Aircraft maintenance manual
- Wiring diagram manual
- Illustrated parts catalogue.

4 Aircraft effectivity details are given in the table below.

Manufacturer's Serial Number (MSN)	Registration	Variable Number	Customer Effectivity Code
25054	G-OOOK	NA346	115

AIRCRAFT ILLUSTRATED PARTS CATALOG SUPPLEMENT

LIST OF EFFECTIVE PAGES

CHAP-SECT-UNIT	PAGE No.	DATE	CHAP-SECT-UNIT	PAGE No.	DATE
EFFECTIVE PAGES	i	Nov 08/2007			
REVISIONS	ii	Nov 08/2007			
HIGHLIGHTS	iii	Nov 08/2007			
INTRODUCTION	iv	Sep 07/2007			
CONTENTS	v	Sep 07/2007			
31-31-01	1	Sep 07/2007			
31-31-01	2	Sep 07/2007			
31-31-01	3	Sep 07/2007			
31-31-01	4	Sep 07/2007			
31-31-02	1	Nov 08/2007			
31-31-02	2	Nov 08/2007			
31-31-02	3	Nov 08/2007			
31-31-02	4	Nov 08/2007			
31-31-03	1	Sep 07/2007			
31-31-03	2	Sep 07/2007			
31-31-03	3	Sep 07/2007			
31-31-03	4	Sep 07/2007			

AIRCRAFT ILLUSTRATED PARTS CATALOG SUPPLEMENT

RECORD OF REVISIONS

REV No.	INSERTION DATE	BY	REV No.	INSERTION DATE	BY	REV No.	INSERTION DATE	BY
---	Initial issue	---						
1	Nov 08/2007	AES						

AIRCRAFT ILLUSTRATED PARTS CATALOG SUPPLEMENT

HIGHLIGHTS

1 Changes

A Various alternative parts were deleted from the parts list of pageblock 31-31-02 at this revision. These deleted optional parts were for the underwater locator beacon.

AIRCRAFT ILLUSTRATED PARTS CATALOG SUPPLEMENT

INTRODUCTION

1 This section supplements the manufacturer's aircraft illustrated parts catalog.

2 Aircraft applicability and effectivity codes are given in the table below (in customer effectivity code order).

Registration	Manufacturer's serial number (variant No).	Customer effectivity code	Customer effectivity code terminator
G-OOOK	25054 (NA346)	115	-

AIRCRAFT ILLUSTRATED PARTS CATALOG SUPPLEMENT

TABLE OF CONTENTS

SUBJECT	CHAPTER SECTION UNIT	PAGEBLOCK
SOLID-STATE FLIGHT DATA RECORDER	31-31-01	1
UNDERWATER LOCATOR BEACON	31-31-02	1
DIGITAL FLIGHT DATA ACQUISITION UNIT	31-31-03	1

FLIGHT DATA RECORDER

INTRODUCTION

1 The Solid-State Flight Data Recorder (SSFDR) is also referred to as the Flight Data Recorder (FDR).

2 This document supplements this pageblock of the aircraft illustrated parts catalog.

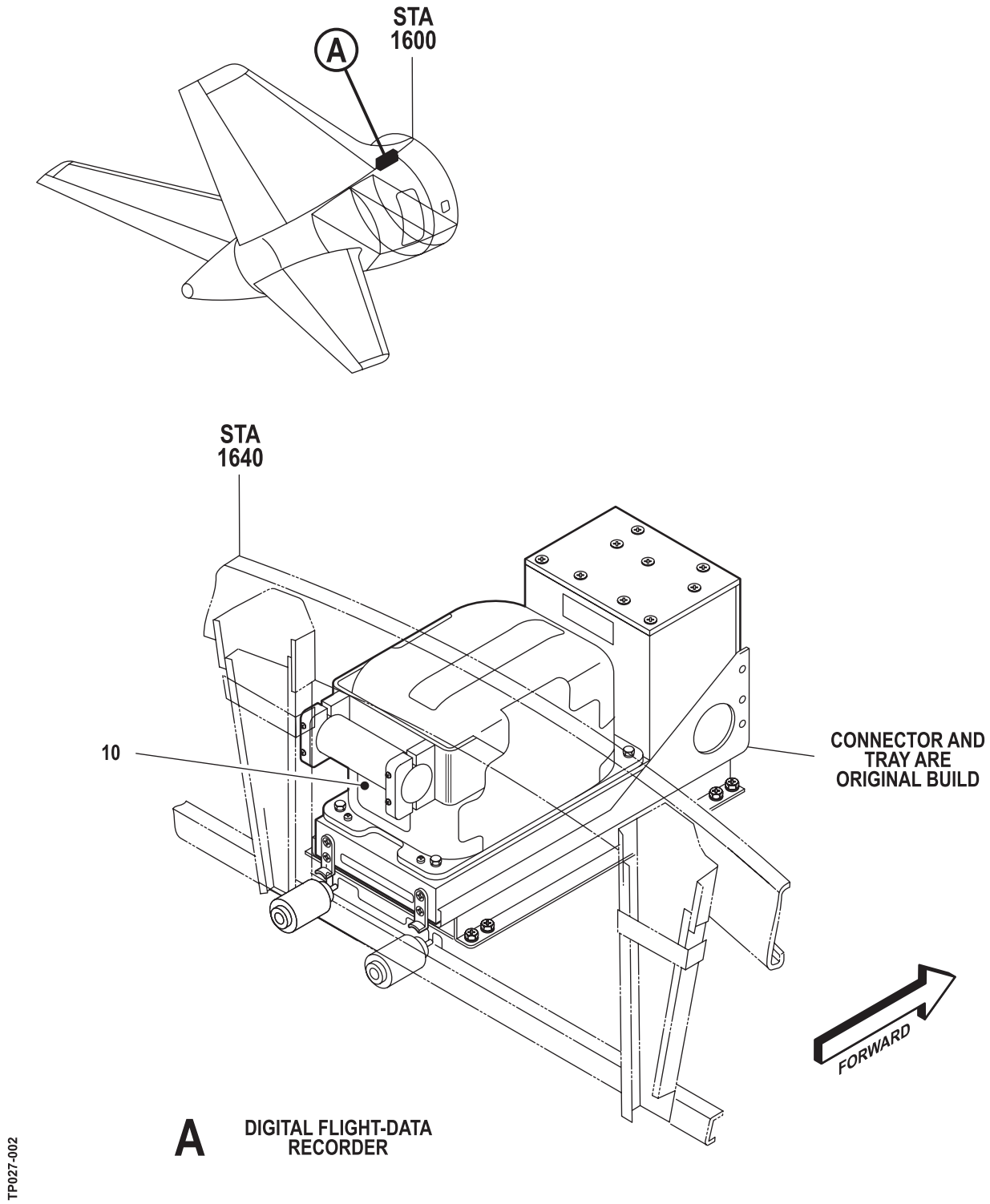

Fig 1 Flight data recorder

FIG ITEM	PART NO.	NOMENCLATURE 1 2 3 4 5 6 7	EFF. FROM TO	QTY
1				
10	980-4700-042	. R E C O R D E R A S S Y - FLIGHT DATA SUPPLIER CODE: V97896 V97896 FUNCTIONAL DESCRIPTION: RECORDS SELECTED PARAMETERS FROM VARIOUS AIRPLANE SYSTEMS AND SENSORS USING SOLID-STATE MEMORY. ELECTRICAL EQUIP NUMBER: M00200 COMPONENT MAINT MANUAL REF: 31-30-40 QUALIFIED I/W DATA: MINOR CHANGE TO AIRCRAFT WIRING MAY BE REQ'D TO MATCH DATA RATE WITH DFDAU.	115115	1

- Not illustrated

INTENTIONALLY LEFT BLANK

UNDERWATER LOCATOR BEACON

INTRODUCTION

1 This document supplements this pageblock of the aircraft illustrated parts catalog.

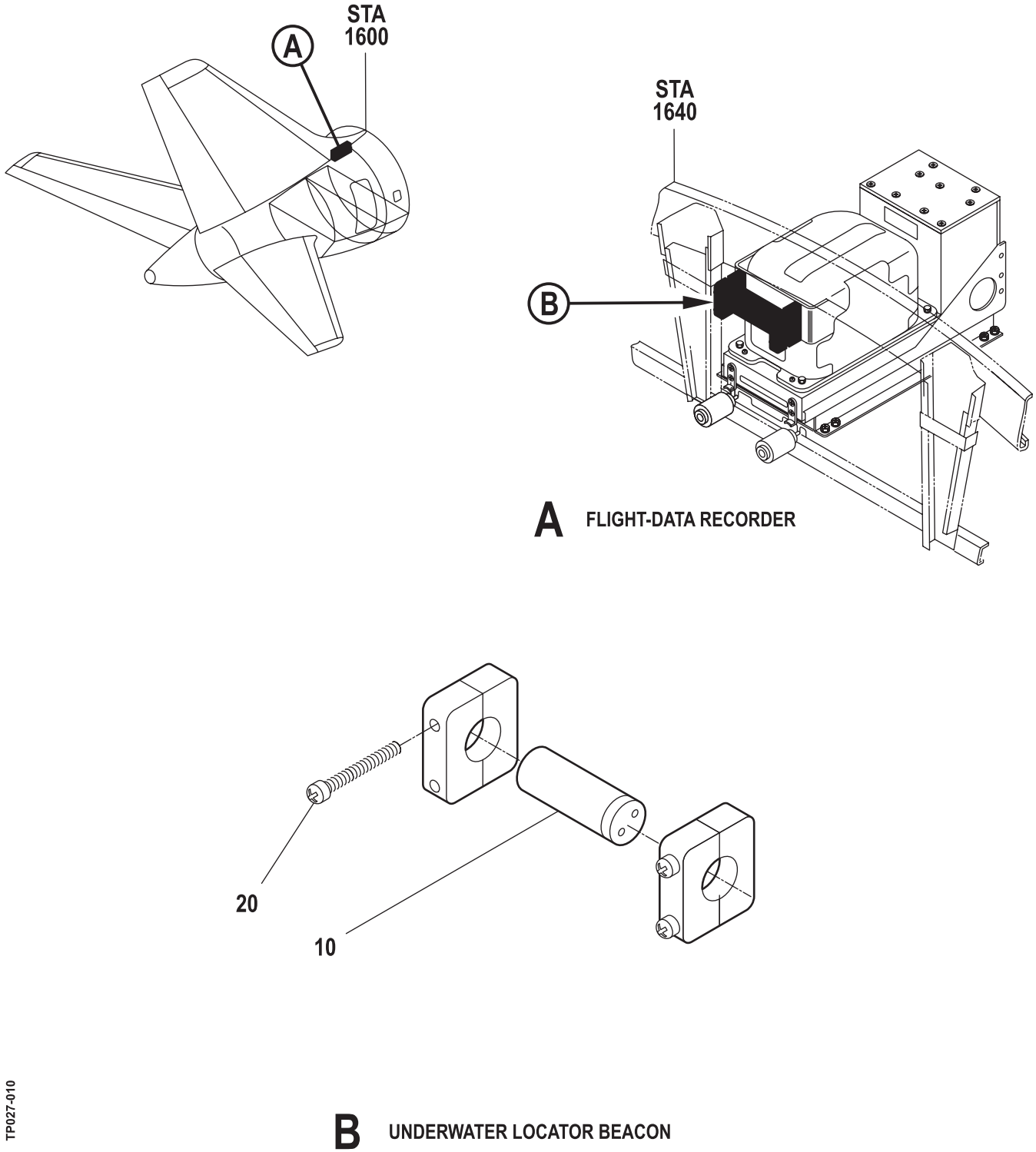

Fig 1 Underwater locator beacon

FIG ITEM	PART NO.	NOMENCLATURE 1 2 3 4 5 6 7	EFF. FROM TO	QTY
1				
10	DK100	. BEACON - UNDERWATER SUPPLIER CODE: V94970 OPTIONAL PART: DK120 V94970 ELP362D V4U270 ELP362DS V4U270	115115	1
10	DK120	. BEACON-UNDERWATER SUPPLIER CODE: V94970 OPTIONAL PART: DK100 V94970 ELP362D V4U270 ELP362DS V4U270	115115	1
10	ELP362D	. BEACON-UNDERWATER SUPPLIER CODE: V94970 OPTIONAL PART: DK100 V94970 DK120 V94970 ELP362DS V4U270	115115	1
10	ELP362DS	. BEACON-UNDERWATER SUPPLIER CODE: V4U270 OPTIONAL PART: DK100 V94970 DK120 V94970 ELP362D V4U270	115115	1

- Not illustrated

FIG ITEM	PART NO.	NOMENCLATURE 1 2 3 4 5 6 7	EFF. FROM TO	QTY
		ATTACHING PARTS		
20	NAS1352C08-20	. S C R E W OPTIONAL PART: PL54U82J20 V03038 PAT63234SS1 V51506	115115	1
20	PL54U82J20	. S C R E W SUPPLIER CODE: V03038 OPTIONAL PART: NAS1352C08-20 PAT63234SS1 V51506	115115	1
20	PAT63234SS1	. S C R E W SUPPLIER CODE: V51506 OPTIONAL PART: NAS1352C08-20 PL54U82J20 V03038	115115	1

- Not illustrated

FLIGHT DATA ACQUISITION UNIT

INTRODUCTION

1 The Digital Flight Data Acquisition Unit (DFDAU) is also referred to as the Flight Data Acquisition Unit (FDAU).

2 This document supplements this pageblock of the aircraft illustrated parts catalog.

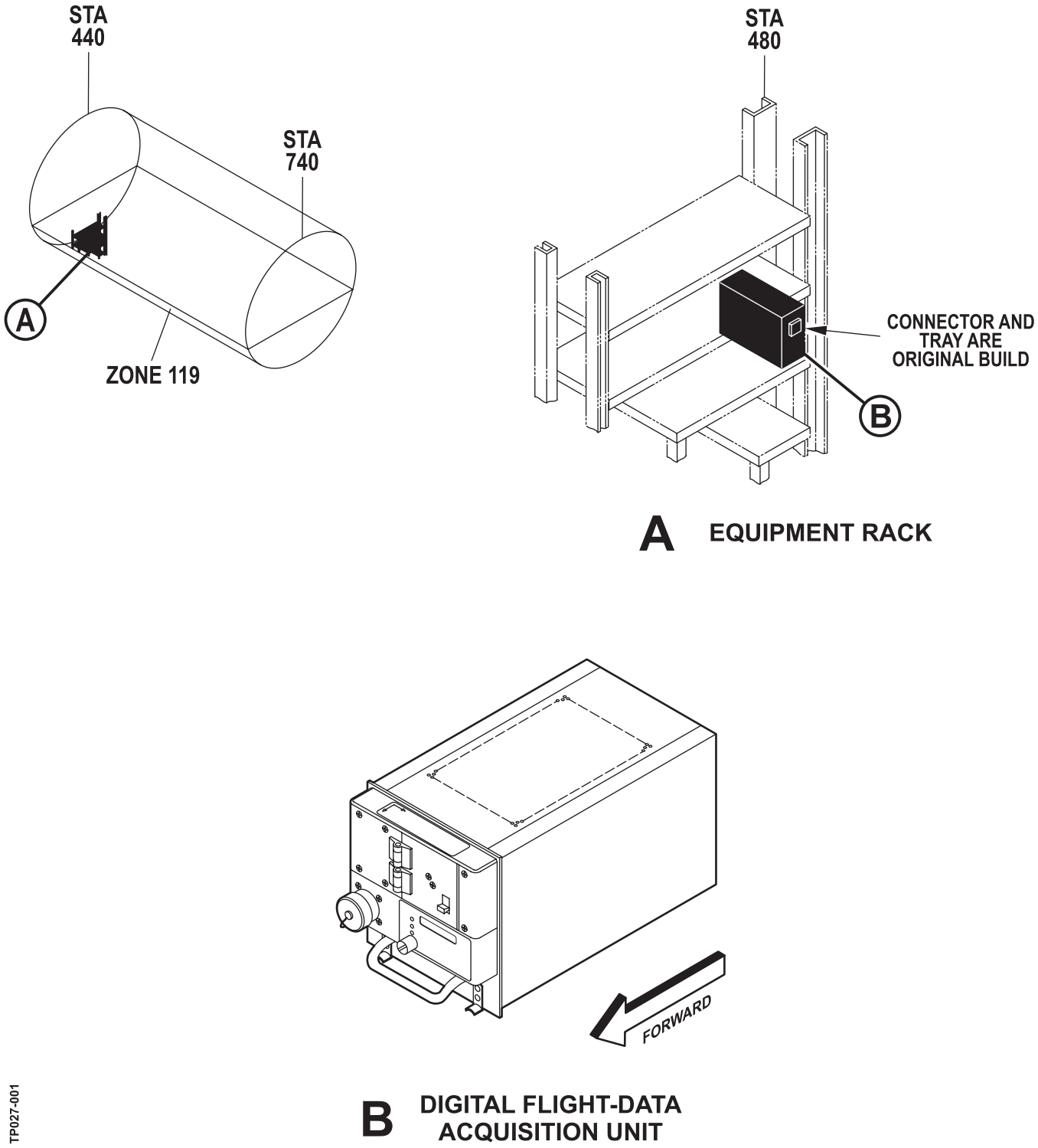

Fig 1 EQUIPMENT AND SOFTWARE INSTN - MAIN ELECTRONICS EQPT CTR DFDAU

FIG ITEM	PART NO.	NOMENCLATURE 1 2 3 4 5 6 7	EFF. FROM TO	QTY
1				
10	967-0212-002	. ACQUISITION UNIT (CUSTOMER FURNISHED) SUPPLIER CODE: V97896 FUNCTIONAL DESCRIPTION: RECEIVES DATA FROM VARIOUS AIRPLANE SYSTEMS AND OUTPUTS FORMATTED DATA TO THE FLIGHT DATA RECORDER. ELECTRICAL EQUIP NUMBER: M138 COMPONENT MAINT MANUAL REF: 31-31-21	115115	1

- Not illustrated

INTENTIONALLY LEFT BLANK

AES Limited

PUBLICATION REVISION

Document No. AES-TP-0037

TRANSMITTAL SHEET
THE TECHNICAL INFORMATION CONTAINED IN THIS DOCUMENT HAS BEEN APPROVED UNDER THE AUTHORITY OF EASA DESIGN ORGANISATION APPROVAL No. EASA.21J.036

Project No.: 0915
DRN: 2526
Issue: 1

Reason for Issue: **To introduce supplements to the aircraft technical publications listed in the introduction of this transmittal.**

This is the Introduction of a FCA fleet standard digital flight data recorder under cover of AES modification AES-757-318.

AIRCRAFT TECHNICAL PUBLICATION SUPPLEMENT - CERTIFICATION

Manual & Chapter	*Prepared by*	*Responsible for design*	*Date*	*Compliance Verification Engineer / Approval*		
				Stress	*Design*	*Systems*
Illustrated Parts Catalog **31-31**	T N Gaunt		4/10/07			

EFFECTIVITY

26146 (NB506), 27147 (NB507)

TRANSMITTAL

INTRODUCTION - GENERAL

1 This modification covers the Introduction of a FCA fleet standard digital flight data recorder to the subject aircraft.

2 The only technical publication which is affected and which should be used with this supplement is the illustrated parts catalogue.

3 Aircraft effectivity details are given in the table below.

Manufacturer's Serial Number (MSN)	Registration	Variable Number	Customer Effectivity Code
27146	G-OOBI	NB506	006
27147	G-OOBJ	NB507	002

AIRCRAFT ILLUSTRATED PARTS CATALOG

LIST OF EFFECTIVE PAGES

CHAP-SECT-UNIT	PAGE No.	DATE	CHAP-SECT-UNIT	PAGE No.	DATE
EFFECTIVE PAGES	i	Oct 04/2007			
REVISIONS	ii	Oct 04/2007			
INTRODUCTION	iii	Oct 04/2007			
CONTENTS	iv	Oct 04/2007			
31-31-01	1	Oct 04/2007			
31-31-01	2	Oct 04/2007			
31-31-01	3	Oct 04/2007			
31-31-01	4	Oct 04/2007			
31-31-02	1	Oct 04/2007			
31-31-02	2	Oct 04/2007			
31-31-02	3	Oct 04/2007			
31-31-02	4	Oct 04/2007			

AIRCRAFT ILLUSTRATED PARTS CATALOG

RECORD OF REVISIONS

REV No.	INSERTION DATE	BY	REV No.	INSERTION DATE	BY	REV No.	INSERTION DATE	BY

EFFECTIVITY

26146 (NB506), 27147 (NB507)

AIRCRAFT ILLUSTRATED PARTS CATALOG

INTRODUCTION

1 This section supplements the manufacturer's aircraft illustrated parts catalog.

2 Aircraft effectivity details are given in the table below.

Manufacturer's Serial Number (MSN)	Registration	Variable Number	Customer Effectivity Code
27146	G-OOBI	NB506	006
27147	G-OOBJ	NB507	002

AIRCRAFT ILLUSTRATED PARTS CATALOG

TABLE OF CONTENTS

SUBJECT	CHAPTER SECTION UNIT	PAGEBLOCK
FLIGHT DATA RECORDER	31-31-01	1
UNDERWATER LOCATOR BEACON	31-31-02	1

FLIGHT DATA RECORDER

INTRODUCTION

1 The Solid-State Flight Data Recorder (SSFDR) is also referred to as the Flight Data Recorder (FDR).

2 This document supplements this pageblock of the aircraft illustrated parts catalog.

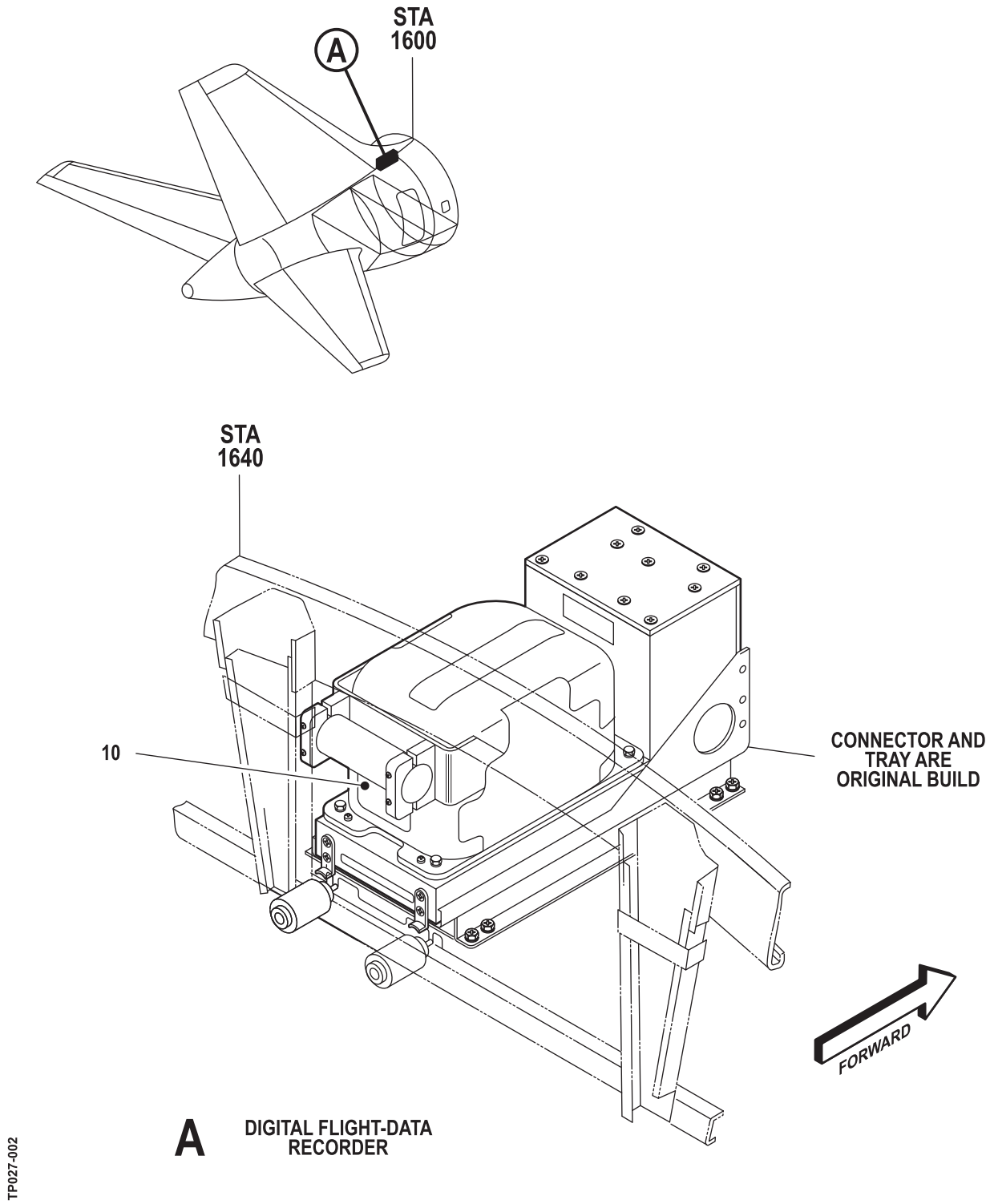

Fig 1 Flight data recorder

FIG ITEM	PART NO.	NOMENCLATURE 1 2 3 4 5 6 7	EFF. FROM TO	QTY
1				
10	980-4700-042	. RECORDER ASSY - FLIGHT DATA SUPPLIER CODE: V97896 FUNCTIONAL DESCRIPTION: RECORDS SELECTED PARAMETERS FROM VARIOUS AIRPLANE SYSTEMS AND SENSORS USING SOLID-STATE MEMORY. ELECTRICAL EQUIP NUMBER: M00200 COMPONENT MAINT MANUAL REF: 31-30-40 QUALIFIED I/W DATA: MINOR CHANGE TO AIRCRAFT WIRING MAY BE REQ'D TO MATCH DATA RATE WITH DFDAU.	002002 006006	1

- Not illustrated

INTENTIONALLY LEFT BLANK

UNDERWATER LOCATOR BEACON

INTRODUCTION

1 This document supplements this pageblock of the aircraft illustrated parts catalog.

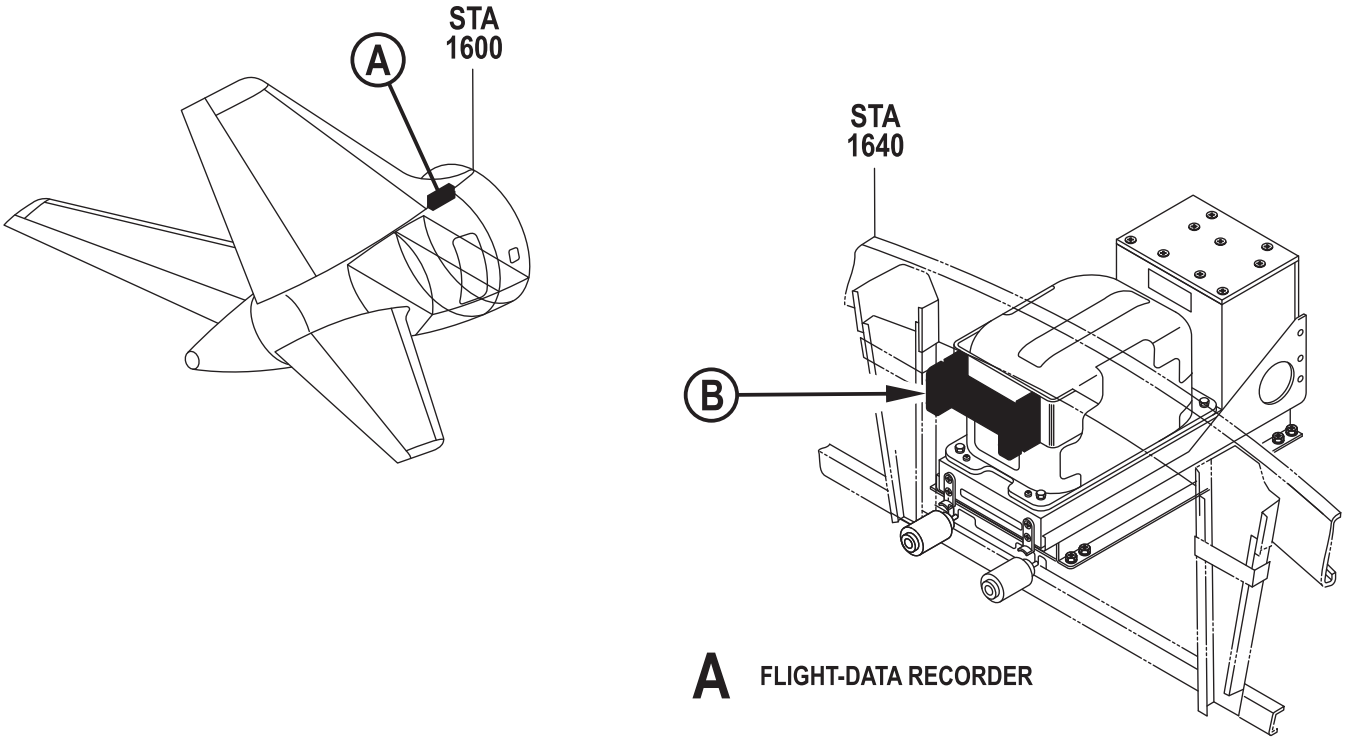

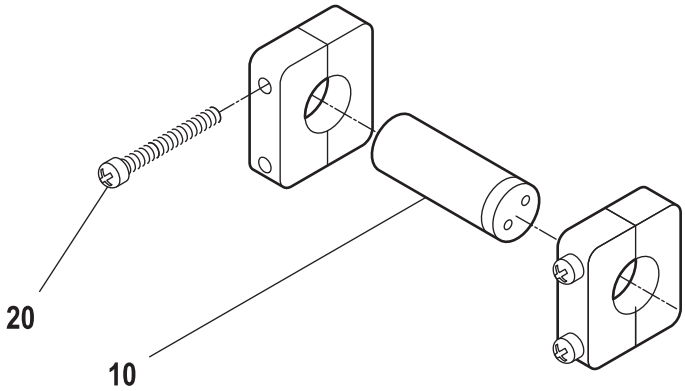

TP027-010

B UNDERWATER LOCATOR BEACON

Fig 1 Underwater locator beacon

FIG ITEM	PART NO.	NOMENCLATURE 1 2 3 4 5 6 7	EFF. FROM TO	QTY
1				
10	DK100	. BEACON - UNDERWATER SUPPLIER CODE: V94970 OPTIONAL PART: DK120 ELP362D ELP362DS	002002 006006	1
10	DK120	. BEACON-UNDERWATER SUPPLIER CODE: V94970 OPTIONAL PART: DK100 ELP362D ELP362DS	002002 006006	1
10	ELP362D	. BEACON - EMER LOCATOR UNDERWATER SUPPLIER CODE: V4U270 OPTIONAL PART: DK100 DK120 ELP362DS	002002 006006	1
10	ELP362DS	. BEACON-UNDERWATER SUPPLIER CODE: V4U270 OPTIONAL PART: DK100 DK120 ELP362D	002002 006006	1

- Not illustrated

FIG ITEM	PART NO.	NOMENCLATURE 1 2 3 4 5 6 7	EFF. FROM TO	QTY
		ATTACHING PARTS		
20	NAS1352C08-20	. S C R E W OPTIONAL PART: PL54U82J20 V03038 PAT63234SS1 V51506	002002 006006	1
20	PL54U82J20	. S C R E W SUPPLIER CODE: V03038 OPTIONAL PART: NAS1352C08-20 PAT63234SS1 V51506	002002 006006	1
20	PAT63234SS1	. S C R E W SUPPLIER CODE: V51506 OPTIONAL PART: NAS1352C08-20 PL54U82J20 V03038	002002 006006	1

- Not illustrated

CH-SECT-UNIT-FIG	PAGE NO.	DATE
*31	1	MAY 20/09
*31	2	MAY 20/09
*31	3	MAY 20/09
*31	4	MAY 20/09
*31	5	MAY 20/09
*31	6	MAY 20/09
*31	7	MAY 20/09
*31	8	MAY 20/09
*31	9	MAY 20/09
*31	10	MAY 20/09
*31	11	MAY 20/09
*31	12	MAY 20/09
*31	13	MAY 20/09
*31	14	MAY 20/09
31-01-00	1	MAY 28/07
31-01-06- 2	0	JAN 20/09
31-01-06- 2	0A	JAN 20/09
31-01-06- 2	0B	JAN 20/09
31-01-06- 2	0C	JAN 20/09
31-01-06- 2	0D	JAN 20/09
31-01-06- 2	0E	JAN 20/09
31-01-06- 2	0F	JAN 20/09
31-01-06- 2	1	JAN 20/09
31-01-06- 2	2	JAN 20/09
31-01-06- 2	3	JAN 20/09
31-01-06- 2	4	JAN 20/09
31-01-06- 2	5	JAN 20/09
31-01-06- 2	6	JAN 20/09
31-01-06- 2	7	JAN 20/09
31-01-06- 2	8	JAN 20/09
31-01-06- 2	9	JAN 20/09
31-01-06- 2	10	JAN 20/09
31-01-06- 2	11	JAN 20/09
31-01-06- 2	12	JAN 20/09
31-01-06- 2	13	JAN 20/09
31-01-06- 2	14	JAN 20/09
31-01-06- 2	15	JAN 20/09
31-01-06-10	0	MAY 28/07
31-01-06-10	0A	MAY 28/07
31-01-06-10	0B	MAY 28/07
31-01-06-10	1	JAN 20/09
31-01-06-10	2	JAN 20/09
31-01-06-10	3	JAN 20/09
31-01-06-10	4	JAN 20/09
31-01-06-10	5	JAN 20/09
31-01-31- 2	0	MAY 28/07
31-01-31- 2	0A	MAY 28/07
31-01-31- 2	0B	MAY 28/07
31-01-31- 2	0C	MAY 28/07
31-01-31- 2	0D	MAY 28/07
31-01-31- 2	0E	MAY 28/07

CH-SECT-UNIT-FIG	PAGE NO.	DATE
31-01-31- 2	1	JAN 20/09
31-01-31- 2	2	JAN 20/09
31-01-31- 2	3	JAN 20/09
31-01-31- 2	4	JAN 20/09
31-01-31- 2	5	JAN 20/09
31-01-31- 2	6	JAN 20/09
31-01-31- 2	7	JAN 20/09
31-01-31- 2	8	JAN 20/09
31-01-31- 2	9	JAN 20/09
31-01-31- 2	10	JAN 20/09
31-01-31- 3	0	MAY 28/07
31-01-31- 3	0A	MAY 28/07
31-01-31- 3	1	JAN 20/09
31-01-31- 3	2	JAN 20/09
31-01-31- 3	3	JAN 20/09
31-01-31- 3	4	JAN 20/09
31-01-31- 5	0	JAN 20/09
31-01-31- 5	0A	JAN 20/09
31-01-31- 5	0B	JAN 20/09
31-01-31- 5	1	JAN 20/09
31-01-31- 5	2	JAN 20/09
31-01-31- 5	3	JAN 20/09
31-01-31- 5	4	JAN 20/09
31-01-31- 5	5	JAN 20/09
31-01-32- 2	0	MAY 28/07
31-01-32- 2	0A	MAY 28/07
31-01-32- 2	0B	MAY 28/07
31-01-32- 2	0C	MAY 28/07
31-01-32- 2	0D	MAY 28/07
31-01-32- 2	0E	MAY 28/07
31-01-32- 2	0F	MAY 28/07
31-01-32- 2	0G	MAY 28/07
31-01-32- 2	0H	MAY 28/07
31-01-32- 2	0I	MAY 28/07
31-01-32- 2	0J	MAY 28/07
31-01-32- 2	1	JAN 20/09
31-01-32- 2	2	JAN 20/09
31-01-32- 2	3	JAN 20/09
31-01-32- 2	4	JAN 20/09
31-01-32- 2	5	JAN 20/09
31-01-32- 2	6	JAN 20/09
31-01-32- 2	7	JAN 20/09
31-01-32- 2	8	JAN 20/09
31-01-32- 2	9	JAN 20/09
31-01-32- 2	10	JAN 20/09
31-01-32- 2	11	JAN 20/09
31-01-32- 2	12	JAN 20/09
31-01-32-10	0	JAN 20/09
31-01-32-10	0A	JAN 20/09
31-01-32-10	0B	JAN 20/09
31-01-32-10	0C	JAN 20/09

*** THE ASTERISK INDICATES PAGES CHANGED OR ADDED BY THE CURRENT REVISION**

BOEING PROPRIETARY - Copyright © - Unpublished Work - See title page for details.

CH-SECT-UNIT-FIG	PAGE NO.	DATE
31-01-32-10	1	JAN 20/09
31-01-32-10	2	JAN 20/09
31-01-32-10	3	JAN 20/09
31-01-33- 1	0	MAY 28/07
31-01-33- 1	0A	MAY 28/07
31-01-33- 1	1	JAN 20/09
31-01-33- 1	2	JAN 20/09
31-01-33- 1	3	JAN 20/09
31-01-33- 1	4	JAN 20/09
31-01-33- 1	5	JAN 20/09
31-01-33- 1	6	JAN 20/09
31-01-33- 1	7	JAN 20/09
31-01-33- 1	8	JAN 20/09
31-01-33- 1	9	JAN 20/09
31-01-33- 3	0	MAY 28/07
31-01-33- 3	0A	MAY 28/07
31-01-33- 3	0B	MAY 28/07
31-01-33- 3	0C	MAY 28/07
31-01-33- 3	0D	MAY 28/07
31-01-33- 3	1	JAN 20/09
31-01-33- 3	2	JAN 20/09
31-01-33- 3	3	JAN 20/09
31-01-33- 3	4	JAN 20/09
31-01-33- 3	5	JAN 20/09
31-01-33- 3	6	JAN 20/09
31-01-33- 3	7	JAN 20/09
31-01-33- 3	8	JAN 20/09
31-01-33- 3	9	JAN 20/09
31-01-33- 3	10	JAN 20/09
31-01-33- 3	11	JAN 20/09
31-01-33- 3	12	JAN 20/09
31-01-33- 3	13	JAN 20/09
31-01-33- 3	14	JAN 20/09
31-01-33- 3	15	JAN 20/09
31-01-33- 3	16	JAN 20/09
31-01-33- 4	0	MAY 28/07
31-01-33- 4	0A	MAY 28/07
31-01-33- 4	0B	MAY 28/07
31-01-33- 4	1	JAN 20/09
31-01-33-10	0	JAN 20/09
31-01-33-10	0A	JAN 20/09
31-01-33-10	0B	JAN 20/09
31-01-33-10	1	JAN 20/09
31-01-33-10	2	JAN 20/09
31-01-33-10	3	JAN 20/09
31-01-33-10	4	JAN 20/09
31-01-33-10	5	JAN 20/09
31-01-33-10	6	JAN 20/09
31-01-33-10	7	JAN 20/09
31-01-33-10	8	JAN 20/09
31-01-33-10	9	JAN 20/09

CH-SECT-UNIT-FIG	PAGE NO.	DATE
31-01-34- 1	0	MAY 28/07
31-01-34- 1	1	JAN 20/09
31-01-34- 1	2	JAN 20/09
31-01-34- 1	3	JAN 20/09
31-01-34- 1	4	JAN 20/09
31-01-34- 1	5	JAN 20/09
31-01-34- 2	0	MAY 28/07
31-01-34- 2	0A	MAY 28/07
31-01-34- 2	0B	MAY 28/07
31-01-34- 2	0C	JAN 20/09
31-01-34- 2	0D	MAY 28/07
31-01-34- 2	0E	MAY 28/07
31-01-34- 2	0F	MAY 28/07
31-01-34- 2	0G	MAY 28/07
31-01-34- 2	1	JAN 20/09
31-01-34- 2	2	JAN 20/09
31-01-34- 2	3	JAN 20/09
31-01-34- 2	4	JAN 20/09
31-01-34- 2	5	JAN 20/09
31-01-34- 2	6	JAN 20/09
31-01-34- 2	7	JAN 20/09
31-01-34- 2	8	JAN 20/09
31-01-34- 2	9	JAN 20/09
31-01-34- 2	10	JAN 20/09
31-01-34- 2	11	JAN 20/09
31-01-34- 2	12	JAN 20/09
31-01-34- 2	13	JAN 20/09
31-01-34- 3	0	JAN 20/09
31-01-34- 3	0A	JAN 20/09
31-01-34- 3	0B	JAN 20/09
31-01-34- 3	0C	JAN 20/09
31-01-34- 3	0D	JAN 20/09
31-01-34- 3	0E	JAN 20/09
31-01-34- 3	1	JAN 20/09
31-01-34- 3	2	JAN 20/09
31-01-34- 3	3	JAN 20/09
31-01-34- 3	4	JAN 20/09
31-01-34- 3	5	JAN 20/09
31-01-34- 3	6	JAN 20/09
31-01-34- 3	7	JAN 20/09
31-01-34- 3	8	JAN 20/09
31-01-34- 3	9	JAN 20/09
31-01-34- 3	10	JAN 20/09
31-01-34- 3	11	JAN 20/09
31-01-34- 3	12	JAN 20/09
31-01-34- 3A	0	JAN 20/09
31-01-34- 3A	1	JAN 20/09
31-01-34- 3A	2	JAN 20/09
31-01-34- 3A	3	JAN 20/09
31-01-34- 3A	4	JAN 20/09
31-01-34- 3A	5	JAN 20/09

* THE ASTERISK INDICATES PAGES CHANGED OR ADDED BY THE CURRENT REVISION

BOEING PROPRIETARY - Copyright © - Unpublished Work - See title page for details.

CH-SECT-UNIT-FIG	PAGE NO.	DATE
31-01-34- 3A	6	JAN 20/09
31-01-36- 1	0	JAN 20/09
31-01-36- 1	0A	JAN 20/09
31-01-36- 1	0B	JAN 20/09
31-01-36- 1	0C	JAN 20/09
31-01-36- 1	1	JAN 20/09
31-01-36- 1	2	JAN 20/09
31-01-36- 1	3	JAN 20/09
31-01-36- 1	4	JAN 20/09
31-01-36- 1	5	JAN 20/09
31-01-36- 1	6	JAN 20/09
31-01-36- 1	7	JAN 20/09
31-01-36- 1B	0	MAY 28/07
31-01-36- 1B	0A	MAY 28/07
31-01-36- 1B	1	JAN 20/09
31-01-36- 1B	2	JAN 20/09
31-01-36- 1B	3	JAN 20/09
31-01-36- 1B	4	JAN 20/09
31-01-36- 1B	5	JAN 20/09
31-01-36- 5	0	MAY 28/07
31-01-36- 5	1	JAN 20/09
31-01-36- 5	2	JAN 20/09
31-01-36- 5	3	JAN 20/09
31-01-36- 5	4	JAN 20/09
31-01-36- 5	5	JAN 20/09
31-01-36- 7	0	MAY 28/07
31-01-36- 7	0A	MAY 28/07
31-01-36- 7	0B	MAY 28/07
31-01-36- 7	0C	MAY 28/07
31-01-36- 7	0D	MAY 28/07
31-01-36- 7	0E	MAY 28/07
31-01-36- 7	0F	MAY 28/07
31-01-36- 7	0G	MAY 28/07
31-01-36- 7	0H	MAY 28/07
31-01-36- 7	1	JAN 20/09
31-01-36- 7	2	JAN 20/09
31-01-36- 7	3	JAN 20/09
31-01-36- 7	4	JAN 20/09
31-01-36- 7	5	JAN 20/09
31-01-36- 7	6	JAN 20/09
31-01-36- 7	7	JAN 20/09
31-01-36- 7	8	JAN 20/09
31-01-36- 7	9	JAN 20/09
31-01-36- 7	10	JAN 20/09
31-01-36- 7	11	JAN 20/09
31-01-36- 7	12	JAN 20/09
31-01-36- 7	13	JAN 20/09
31-01-36- 7	14	JAN 20/09
31-01-36- 7	15	JAN 20/09
31-01-36- 7	16	JAN 20/09
31-01-37- 1	0	MAY 28/07

CH-SECT-UNIT-FIG	PAGE NO.	DATE
31-01-37- 1	0A	MAY 28/07
31-01-37- 1	0B	MAY 28/07
31-01-37- 1	0C	SEP 20/08
31-01-37- 1	0D	MAY 28/07
31-01-37- 1	1	JAN 20/09
31-01-37- 1	2	JAN 20/09
31-01-37- 1	3	JAN 20/09
31-01-37- 1	4	JAN 20/09
31-01-37- 1	5	JAN 20/09
31-01-37- 1	6	JAN 20/09
31-01-37- 1	7	JAN 20/09
31-01-37- 1	8	JAN 20/09
31-01-37- 1	9	JAN 20/09
31-01-37- 1	10	JAN 20/09
31-01-37- 1	11	JAN 20/09
31-01-37- 1	12	JAN 20/09
31-01-37- 1	13	JAN 20/09
31-01-37- 1	14	JAN 20/09
31-01-37- 1B	0	MAY 28/07
31-01-37- 1B	1	JAN 20/09
31-01-37- 1B	2	JAN 20/09
31-01-37- 1B	3	JAN 20/09
31-01-37- 1B	4	JAN 20/09
31-01-37- 1B	5	JAN 20/09
31-01-37- 2	0	MAY 28/07
31-01-37- 2	0A	MAY 28/07
31-01-37- 2	0B	MAY 28/07
31-01-37- 2	0C	MAY 28/07
31-01-37- 2	0D	MAY 28/07
31-01-37- 2	0E	MAY 28/07
31-01-37- 2	0F	MAY 28/07
31-01-37- 2	0G	MAY 28/07
31-01-37- 2	1	JAN 20/09
31-01-37- 2	2	JAN 20/09
31-01-37- 2	3	JAN 20/09
31-01-37- 2	4	JAN 20/09
31-01-37- 2	5	JAN 20/09
31-01-37- 2	6	JAN 20/09
31-01-37- 2	7	JAN 20/09
31-01-37- 2	8	JAN 20/09
31-01-37- 2	9	JAN 20/09
31-01-37- 2	10	JAN 20/09
31-01-37- 5	0	MAY 28/07
31-01-37- 5	0A	MAY 28/07
31-01-37- 5	0B	MAY 28/07
31-01-37- 5	1	JAN 20/09
31-01-37- 5	2	JAN 20/09
31-01-37- 5	3	JAN 20/09
31-01-37- 5	4	JAN 20/09
31-01-37-10	0	JAN 20/09
31-01-37-10	0A	JAN 20/09

* THE ASTERISK INDICATES PAGES CHANGED OR ADDED BY THE CURRENT REVISION

BOEING PROPRIETARY - Copyright © - Unpublished Work - See title page for details.

CH-SECT-UNIT-FIG	PAGE NO.	DATE
31-01-37-10	0B	JAN 20/09
31-01-37-10	0C	JAN 20/09
31-01-37-10	1	JAN 20/09
31-01-37-10	2	JAN 20/09
31-01-37-10	3	JAN 20/09
31-01-37-10	4	JAN 20/09
31-01-37-10	5	JAN 20/09
31-01-37-10	6	JAN 20/09
31-01-37-10	7	JAN 20/09
31-01-37-10	8	JAN 20/09
31-01-37-10	9	JAN 20/09
31-01-37-10	10	JAN 20/09
31-01-37-10	11	JAN 20/09
31-01-37-10	12	JAN 20/09
31-01-37-10	13	JAN 20/09
31-01-37-10	14	JAN 20/09
31-01-37-10	15	JAN 20/09
31-01-37-10	16	JAN 20/09
31-01-37-10	17	JAN 20/09
31-01-37-10	18	JAN 20/09
31-01-37-10	19	JAN 20/09
31-01-37-10	20	JAN 20/09
31-01-37-10	21	JAN 20/09
31-01-37-10	22	JAN 20/09
31-01-37-10	23	JAN 20/09
31-01-65- 1	0	JAN 20/09
31-01-65- 1	0A	JAN 20/09
31-01-65- 1	1	JAN 20/09
31-01-65- 1	2	JAN 20/09
31-01-65- 1A	0	MAY 28/07
31-01-65- 1A	0A	MAY 28/07
31-01-65- 1A	0B	MAY 28/07
31-01-65- 1A	0C	MAY 28/07
31-01-65- 1A	1	JAN 20/09
31-01-65- 1A	2	JAN 20/09
31-01-65- 3	0	MAY 28/07
31-01-65- 3	0A	MAY 28/07
31-01-65- 3	0B	MAY 28/07
31-01-65- 3	0C	JAN 20/09
31-01-65- 3	1	JAN 20/09
31-01-65- 3	2	JAN 20/09
31-01-65- 3	3	JAN 20/09
31-01-65- 3	4	JAN 20/09
31-01-65- 3	5	JAN 20/09
31-01-65- 3	6	JAN 20/09
31-01-65- 3	7	JAN 20/09
31-01-70- 1	0	JAN 20/09
31-01-70- 1	0A	MAY 28/07
31-01-70- 1	0B	JAN 20/09
31-01-70- 1	1	JAN 20/09
31-01-70- 1	2	JAN 20/09

CH-SECT-UNIT-FIG	PAGE NO.	DATE
31-01-70- 1	3	JAN 20/09
31-01-70- 5	0	JAN 20/09
31-01-70- 5	0A	JAN 20/09
31-01-70- 5	1	JAN 20/09
31-01-70- 5	2	JAN 20/09
31-01-70- 5	3	JAN 20/09
31-01-70- 5	4	JAN 20/09
31-01-70- 5	5	JAN 20/09
31-01-70- 5	6	JAN 20/09
31-01-71- 1	0	JAN 20/09
31-01-71- 1	0A	MAY 28/07
31-01-71- 1	0B	MAY 28/07
31-01-71- 1	0C	MAY 28/07
31-01-71- 1	0D	MAY 28/07
31-01-71- 1	0E	MAY 28/07
31-01-71- 1	0F	JAN 20/09
31-01-71- 1	1	JAN 20/09
31-01-71- 1	2	JAN 20/09
31-01-71- 1	3	JAN 20/09
31-01-71- 1	4	JAN 20/09
31-01-71- 1	5	JAN 20/09
31-01-71- 1	6	JAN 20/09
31-01-71- 1	7	JAN 20/09
31-01-71- 1	8	JAN 20/09
31-01-71- 1	9	JAN 20/09
31-01-71- 1	10	JAN 20/09
31-01-71- 1	11	JAN 20/09
31-01-71- 2	0	MAY 28/07
31-01-71- 2	0A	MAY 28/07
31-01-71- 2	0B	MAY 28/07
31-01-71- 2	1	JAN 20/09
31-01-71- 2	2	JAN 20/09
31-01-71- 2	3	JAN 20/09
31-01-71- 2	4	JAN 20/09
31-01-71- 2	5	JAN 20/09
31-01-71- 2	6	JAN 20/09
31-01-71- 2	7	JAN 20/09
31-01-86- 1A	0	JAN 20/08
31-01-86- 1A	0A	JAN 20/08
31-01-86- 1A	1	JAN 20/09
31-01-86- 1A	2	JAN 20/09
31-01-86- 1A	3	JAN 20/09
31-01-86- 1A	4	JAN 20/09
31-01-86- 2	0	JAN 20/08
31-01-86- 2	1	JAN 20/09
31-01-86- 2	2	JAN 20/09
31-01-86- 2	3	JAN 20/09
31-01-86- 3	0	JAN 20/09
31-01-86- 3	1	JAN 20/09
31-01-86- 4	0	JAN 20/09
31-01-86- 4	0A	JAN 20/09

* THE ASTERISK INDICATES PAGES CHANGED OR ADDED BY THE CURRENT REVISION

BOEING PROPRIETARY - Copyright © - Unpublished Work - See title page for details.

CH-SECT-UNIT-FIG	PAGE NO.	DATE
31-01-86- 4	1	JAN 20/09
31-01-86- 4	2	JAN 20/09
31-01-86- 4	3	JAN 20/09
31-01-86- 4	4	JAN 20/09
31-01-86- 4	5	JAN 20/09
31-01-86- 5	0	JAN 20/09
31-01-86- 5	0A	JAN 20/09
31-01-86- 5	0B	JAN 20/09
31-01-86- 5	0C	JAN 20/09
31-01-86- 5	1	JAN 20/09
31-01-86- 5	2	JAN 20/09
31-01-86- 5	3	JAN 20/09
31-01-86- 5	4	JAN 20/09
31-01-86- 5	5	JAN 20/09
31-01-86- 5	6	JAN 20/09
31-01-86- 5	7	JAN 20/09
31-11-00	1	MAY 28/07
31-11-11- 1	0	SEP 20/08
31-11-11- 1	1	JAN 20/09
31-11-11- 1	2	JAN 20/09
31-11-11- 1	3	JAN 20/09
31-11-11- 1	4	JAN 20/09
31-11-11- 2	0	JAN 20/09
31-11-11- 2	0A	JAN 20/09
31-11-11- 2	0B	MAY 28/07
31-11-11- 2	0C	MAY 28/07
31-11-11- 2	0D	MAY 28/07
31-11-11- 2	1	JAN 20/09
31-11-11- 2	2	JAN 20/09
31-11-11- 2	3	JAN 20/09
31-11-11- 2	4	JAN 20/09
31-11-11- 2	5	JAN 20/09
31-11-11- 2	6	JAN 20/09
31-11-11- 3	0	JAN 20/09
31-11-11- 3	0A	JAN 20/09
31-11-11- 3	1	JAN 20/09
*31-11-11- 3	2	MAY 20/09
*31-11-11- 3	3	MAY 20/09
*31-11-11- 3	4	MAY 20/09
31-11-11-10	0	MAY 28/07
31-11-11-10	0A	MAY 28/07
31-11-11-10	0B	MAY 28/07
31-11-11-10	0C	MAY 28/07
31-11-11-10	0D	MAY 28/07
31-11-11-10	0E	MAY 28/07
31-11-11-10	0F	MAY 28/07
31-11-11-10	1	JAN 20/09
31-11-11-10	2	JAN 20/09
*31-11-11-10	3	MAY 20/09
*31-11-11-10	4	MAY 20/09
*31-11-11-10	5	MAY 20/09

CH-SECT-UNIT-FIG	PAGE NO.	DATE
31-11-11-10	6	JAN 20/09
31-11-11-10	7	JAN 20/09
31-11-11-10	8	JAN 20/09
31-11-11-10	9	JAN 20/09
31-11-11-10	10	JAN 20/09
31-11-11-10	11	JAN 20/09
31-11-11-10	12	JAN 20/09
31-11-11-10	13	JAN 20/09
31-11-11-10	14	JAN 20/09
31-11-11-10	15	JAN 20/09
31-11-11-10	16	JAN 20/09
31-11-11-19	0	JAN 20/09
31-11-11-19	0A	JAN 20/09
31-11-11-19	0B	JAN 20/09
31-11-11-19	0C	JAN 20/09
31-11-11-19	1	JAN 20/09
31-11-11-19	2	JAN 20/09
31-11-11-19	3	JAN 20/09
31-11-11-19	4	JAN 20/09
31-11-11-19	5	JAN 20/09
31-11-11-19	6	JAN 20/09
31-11-11-19	7	JAN 20/09
*31-11-11-19	8	MAY 20/09
31-11-11-19	9	JAN 20/09
31-11-11-19	10	JAN 20/09
31-11-11-19	11	JAN 20/09
*31-11-11-19	12	MAY 20/09
31-11-11-21	0	JAN 20/08
31-11-11-21	0A	JAN 20/08
31-11-11-21	0B	MAY 28/07
31-11-11-21	1	JAN 20/09
31-11-11-21	2	JAN 20/09
31-11-11-21	3	JAN 20/09
31-11-11-21	4	JAN 20/09
31-11-11-21	5	JAN 20/09
31-11-11-21	6	JAN 20/09
31-11-11-21	7	JAN 20/09
31-11-11-21	8	JAN 20/09
31-11-11-21	9	JAN 20/09
31-11-11-21	10	JAN 20/09
31-11-11-21	11	JAN 20/09
31-11-11-21	12	JAN 20/09
31-11-11-22	0	JAN 20/08
31-11-11-22	0A	JAN 20/08
31-11-11-22	1	JAN 20/09
31-11-11-22	2	JAN 20/09
31-11-11-22	3	JAN 20/09
31-11-11-22	4	JAN 20/09
31-11-11-22	5	JAN 20/09
31-11-11-22	6	JAN 20/09
31-11-11-22	7	JAN 20/09

*** THE ASTERISK INDICATES PAGES CHANGED OR ADDED BY THE CURRENT REVISION**

BOEING PROPRIETARY - Copyright © - Unpublished Work - See title page for details.

CH-SECT-UNIT-FIG	PAGE NO.	DATE
31-11-11-22	8	JAN 20/09
31-11-11-22	9	JAN 20/09
31-11-11-28	0	MAY 28/07
31-11-11-28	0A	MAY 28/07
31-11-11-28	0B	MAY 28/07
31-11-11-28	1	JAN 20/09
31-11-11-28	2	JAN 20/09
31-11-11-28	3	JAN 20/09
31-11-11-28	4	JAN 20/09
31-11-11-28	5	JAN 20/09
31-11-11-28	6	JAN 20/09
31-11-11-28	7	JAN 20/09
31-11-11-35	0	MAY 28/07
31-11-11-35	0A	MAY 28/07
31-11-11-35	1	JAN 20/09
31-11-11-35	2	JAN 20/09
31-11-11-35	3	JAN 20/09
31-11-11-35	4	JAN 20/09
31-11-11-35	5	JAN 20/09
31-11-11-35	6	JAN 20/09
31-11-11-35	7	JAN 20/09
31-11-11-35	8	JAN 20/09
31-11-11-35	9	JAN 20/09
31-11-11-36	0	MAY 28/07
31-11-11-36	0A	MAY 28/07
31-11-11-36	1	JAN 20/09
31-11-11-36	2	JAN 20/09
*31-11-11-36	3	MAY 20/09
31-11-11-36	4	JAN 20/09
31-11-11-36	5	JAN 20/09
31-11-11-36	6	JAN 20/09
31-11-11-36	7	JAN 20/09
31-11-11-36	8	JAN 20/09
31-11-11-36	9	JAN 20/09
*31-11-11-36	10	MAY 20/09
*31-11-11-36	11	MAY 20/09
*31-11-11-36	12	MAY 20/09
31-11-11-39	0	MAY 28/07
31-11-11-39	0A	MAY 28/07
31-11-11-39	1	JAN 20/09
*31-11-11-39	2	MAY 20/09
*31-11-11-39	3	MAY 20/09
*31-11-11-39	4	MAY 20/09
*31-11-11-39	5	MAY 20/09
*31-11-11-39	6	MAY 20/09
*31-11-11-39	7	MAY 20/09
*31-11-11-39	8	MAY 20/09
*31-11-11-39	9	MAY 20/09
*31-11-11-39	10	MAY 20/09
31-11-16- 1	0	MAY 28/07
31-11-16- 1	0A	MAY 28/07

CH-SECT-UNIT-FIG	PAGE NO.	DATE
31-11-16- 1	0B	MAY 28/07
31-11-16- 1	0C	MAY 28/07
31-11-16- 1	0D	MAY 28/07
31-11-16- 1	0E	MAY 28/07
31-11-16- 1	1	JAN 20/09
31-11-16- 1	2	JAN 20/09
31-11-16- 1	3	JAN 20/09
31-11-16- 1	4	JAN 20/09
*31-11-16- 1	5	MAY 20/09
*31-11-16- 1	6	MAY 20/09
*31-11-16- 1	7	MAY 20/09
*31-11-16- 1	8	MAY 20/09
*31-11-16- 1	9	MAY 20/09
*31-11-16- 1	10	MAY 20/09
*31-11-16- 1	11	MAY 20/09
*31-11-16- 1	12	MAY 20/09
*31-11-16- 1	13	MAY 20/09
31-11-16- 2	0	MAY 28/07
31-11-16- 2	0A	MAY 28/07
31-11-16- 2	0B	MAY 28/07
31-11-16- 2	0C	MAY 28/07
31-11-16- 2	0D	MAY 28/07
31-11-16- 2	1	JAN 20/09
31-11-16- 2	2	JAN 20/09
31-11-16- 2	3	JAN 20/09
31-11-16- 2	4	JAN 20/09
31-11-16- 2	5	JAN 20/09
31-11-16- 2	6	JAN 20/09
31-11-16- 2	7	JAN 20/09
*31-11-16- 2	8	MAY 20/09
31-11-16- 2	9	JAN 20/09
31-11-16- 2	10	JAN 20/09
31-11-16- 2	11	JAN 20/09
31-11-16- 2	12	JAN 20/09
31-11-16- 2	13	JAN 20/09
31-11-26- 1	0	MAY 28/07
31-11-26- 1	1	JAN 20/09
31-11-26- 1	2	JAN 20/09
31-11-26- 1	3	JAN 20/09
31-11-26- 2	0	JAN 20/09
31-11-26- 2	0A	MAY 28/07
31-11-26- 2	0B	JAN 20/09
31-11-26- 2	1	JAN 20/09
31-11-26- 2	2	JAN 20/09
31-11-26- 2	3	JAN 20/09
31-11-26- 2	4	JAN 20/09
31-11-26- 2	5	JAN 20/09
31-11-26- 2	6	JAN 20/09
31-11-26- 2	7	JAN 20/09
31-11-26- 2	8	JAN 20/09
31-11-26- 2	9	JAN 20/09

* THE ASTERISK INDICATES PAGES CHANGED OR ADDED BY THE CURRENT REVISION

BOEING PROPRIETARY - Copyright © - Unpublished Work - See title page for details.

CH-SECT-UNIT-FIG	PAGE NO.	DATE
31-11-26- 2	10	JAN 20/09
31-11-26- 2	11	JAN 20/09
31-11-26- 2	12	JAN 20/09
31-11-26- 2	13	JAN 20/09
31-11-26- 3	0	JAN 20/09
31-11-26- 3	0A	JAN 20/09
31-11-26- 3	0B	JAN 20/09
31-11-26- 3	1	JAN 20/09
31-11-26- 3	2	JAN 20/09
31-11-26- 3	3	JAN 20/09
31-11-26- 3	4	JAN 20/09
31-11-26- 3	5	JAN 20/09
31-11-26- 3	6	JAN 20/09
*31-11-26- 3	7	MAY 20/09
*31-11-26- 3	8	MAY 20/09
*31-11-26- 3	9	MAY 20/09
31-11-26-10	0	MAY 28/07
31-11-26-10	0A	MAY 28/07
31-11-26-10	0B	MAY 28/07
31-11-26-10	0C	MAY 28/07
31-11-26-10	1	JAN 20/09
*31-11-26-10	2	MAY 20/09
*31-11-26-10	3	MAY 20/09
*31-11-26-10	4	MAY 20/09
*31-11-26-10	5	MAY 20/09
*31-11-26-10	6	MAY 20/09
*31-11-26-10	7	MAY 20/09
*31-11-26-10	8	MAY 20/09
31-11-26-27	0	MAY 28/07
31-11-26-27	0A	MAY 28/07
31-11-26-27	0B	MAY 28/07
31-11-26-27	1	JAN 20/09
31-11-26-27	2	JAN 20/09
31-11-26-27	3	JAN 20/09
31-11-26-27	4	JAN 20/09
31-11-26-27	5	JAN 20/09
31-11-26-27	6	JAN 20/09
31-11-26-27	7	JAN 20/09
31-11-26-27	8	JAN 20/09
31-11-26-27	9	JAN 20/09
31-11-26-29	0	MAY 28/07
31-11-26-29	0A	MAY 28/07
31-11-26-29	0B	MAY 28/07
31-11-26-29	0C	MAY 28/07
31-11-26-29	0D	MAY 28/07
31-11-26-29	0E	MAY 28/07
31-11-26-29	0F	MAY 28/07
31-11-26-29	0G	MAY 28/07
31-11-26-29	0H	MAY 28/07
31-11-26-29	1	JAN 20/09
31-11-26-29	2	JAN 20/09

CH-SECT-UNIT-FIG	PAGE NO.	DATE
31-11-26-29	3	JAN 20/09
31-11-26-29	4	JAN 20/09
31-11-26-29	5	JAN 20/09
31-11-26-29	6	JAN 20/09
31-11-26-29	7	JAN 20/09
31-11-26-29	8	JAN 20/09
31-11-26-29	9	JAN 20/09
31-11-26-29	10	JAN 20/09
31-11-26-29	11	JAN 20/09
31-11-26-29	12	JAN 20/09
31-11-26-29	13	JAN 20/09
31-11-26-29	14	JAN 20/09
31-11-26-30	0	MAY 28/07
31-11-26-30	0A	MAY 28/07
31-11-26-30	0B	MAY 28/07
31-11-26-30	0C	MAY 28/07
31-11-26-30	0D	MAY 28/07
31-11-26-30	0E	MAY 28/07
31-11-26-30	0F	MAY 28/07
31-11-26-30	1	JAN 20/09
31-11-26-30	2	JAN 20/09
31-11-26-30	3	JAN 20/09
31-11-26-30	4	JAN 20/09
31-11-26-30	5	JAN 20/09
31-11-26-30	6	JAN 20/09
31-11-26-30	7	JAN 20/09
31-11-26-32	0	MAY 28/07
31-11-26-32	0A	MAY 28/07
31-11-26-32	1	JAN 20/09
31-11-26-32	2	JAN 20/09
31-11-26-32	3	JAN 20/09
31-11-26-32	4	JAN 20/09
31-11-26-32	5	JAN 20/09
31-11-26-32	6	JAN 20/09
31-11-26-32	7	JAN 20/09
31-11-26-32	8	JAN 20/09
31-11-26-36	0	MAY 28/07
31-11-26-36	0A	MAY 28/07
31-11-26-36	0B	MAY 28/07
31-11-26-36	1	JAN 20/09
31-11-26-36	2	JAN 20/09
31-11-26-36	3	JAN 20/09
31-11-26-36	4	JAN 20/09
31-11-26-36	5	JAN 20/09
*31-11-26-36	6	MAY 20/09
31-11-26-36	7	JAN 20/09
31-11-26-36	8	JAN 20/09
31-11-26-36	9	JAN 20/09
31-11-26-36	10	JAN 20/09
31-11-26-36	11	JAN 20/09
31-11-26-36	12	JAN 20/09

* THE ASTERISK INDICATES PAGES CHANGED OR ADDED BY THE CURRENT REVISION

BOEING PROPRIETARY - Copyright © - Unpublished Work - See title page for details.

CH-SECT-UNIT-FIG	PAGE NO.	DATE
31-11-26-37	0	MAY 28/07
31-11-26-37	0A	MAY 28/07
31-11-26-37	1	JAN 20/09
31-11-26-37	2	JAN 20/09
31-11-26-37	3	JAN 20/09
*31-11-26-37	4	MAY 20/09
*31-11-26-37	5	MAY 20/09
*31-11-26-37	6	MAY 20/09
*31-11-26-37	7	MAY 20/09
31-11-26-38	0	JAN 20/09
31-11-26-38	0A	JAN 20/09
31-11-26-38	0B	JAN 20/09
31-11-26-38	0C	JAN 20/09
31-11-26-38	0D	JAN 20/09
31-11-26-38	1	JAN 20/09
31-11-26-38	2	JAN 20/09
31-11-26-38	3	JAN 20/09
31-11-26-38	4	JAN 20/09
31-11-26-38	5	JAN 20/09
31-11-26-38	6	JAN 20/09
31-11-26-38	7	JAN 20/09
31-11-26-38	8	JAN 20/09
*31-11-26-38	9	MAY 20/09
*31-11-26-38	10	MAY 20/09
*31-11-26-38	11	MAY 20/09
*31-11-26-38	12	MAY 20/09
31-11-31- 1	0	MAY 20/08
31-11-31- 1	1	JAN 20/09
*31-11-31- 1	2	MAY 20/09
*31-11-31- 1	3	MAY 20/09
31-11-31- 1	4	JAN 20/09
31-11-31- 2	0	MAY 28/07
31-11-31- 2	1	JAN 20/09
31-11-31- 2	2	JAN 20/09
31-11-31- 2	3	JAN 20/09
31-11-31- 2	4	JAN 20/09
31-11-31- 2	5	JAN 20/09
31-11-36- 2	0	MAY 28/07
31-11-36- 2	0A	MAY 28/07
31-11-36- 2	0B	MAY 28/07
31-11-36- 2	0C	MAY 28/07
31-11-36- 2	0D	MAY 28/07
31-11-36- 2	0E	MAY 28/07
31-11-36- 2	0F	MAY 28/07
31-11-36- 2	0G	MAY 28/07
31-11-36- 2	0H	MAY 28/07
31-11-36- 2	0I	MAY 28/07
31-11-36- 2	0J	MAY 28/07
31-11-36- 2	0K	MAY 28/07
31-11-36- 2	0L	MAY 28/07
31-11-36- 2	0M	MAY 28/07
31-11-36- 2	0N	MAY 28/07
31-11-36- 2	0O	MAY 28/07
31-11-36- 2	0P	MAY 28/07
31-11-36- 2	0Q	MAY 28/07
31-11-36- 2	0R	MAY 28/07
31-11-36- 2	0S	MAY 28/07
31-11-36- 2	0T	MAY 28/07
31-11-36- 2	0U	MAY 28/07
*31-11-36- 2	1	MAY 20/09
*31-11-36- 2	2	MAY 20/09
*31-11-36- 2	3	MAY 20/09
*31-11-36- 2	4	MAY 20/09
*31-11-36- 2	5	MAY 20/09
31-11-36- 2	6	JAN 20/09
31-11-36- 2	7	JAN 20/09
31-11-36- 2	8	JAN 20/09
31-11-36- 2	9	JAN 20/09
31-11-36- 2	10	JAN 20/09
*31-11-36- 2	11	MAY 20/09
*31-11-36- 2	12	MAY 20/09
31-11-36- 2	13	JAN 20/09
31-11-36- 2	14	JAN 20/09
31-11-36- 2	15	JAN 20/09
31-11-36- 2	16	JAN 20/09
31-11-36- 2	17	JAN 20/09
31-11-36- 2	18	JAN 20/09
31-11-36- 2	19	JAN 20/09
*31-11-36- 2	20	MAY 20/09
*31-11-36- 2	21	MAY 20/09
*31-11-36- 2	22	MAY 20/09
*31-11-36- 2	23	MAY 20/09
*31-11-36- 2	24	MAY 20/09
*31-11-36- 2	25	MAY 20/09
*31-11-36- 2	26	MAY 20/09
*31-11-36- 2	27	MAY 20/09
*31-11-36- 2	28	MAY 20/09
*31-11-36- 2	29	MAY 20/09
*31-11-36- 2	30	MAY 20/09
*31-11-36- 2	31	MAY 20/09
*31-11-36- 2	32	MAY 20/09
31-11-36- 2	33	JAN 20/09
31-11-36- 2	34	JAN 20/09
31-11-36- 2	35	JAN 20/09
31-11-36- 2	36	JAN 20/09
31-11-36- 2	37	JAN 20/09
31-11-36- 2	38	JAN 20/09
31-11-36- 2	39	JAN 20/09
31-11-36- 2	40	JAN 20/09
31-11-36- 3	0	JAN 20/09
31-11-36- 3	0A	JAN 20/09
31-11-36- 3	0B	JAN 20/09

*** THE ASTERISK INDICATES PAGES CHANGED OR ADDED BY THE CURRENT REVISION**

BOEING PROPRIETARY - Copyright © - Unpublished Work - See title page for details.

CH-SECT-UNIT-FIG	PAGE NO.	DATE
31-11-36- 3	0C	JAN 20/09
31-11-36- 3	0D	JAN 20/09
31-11-36- 3	0E	JAN 20/09
31-11-36- 3	0F	JAN 20/09
31-11-36- 3	0G	JAN 20/09
31-11-36- 3	0H	JAN 20/09
31-11-36- 3	0I	JAN 20/09
31-11-36- 3	0J	JAN 20/09
31-11-36- 3	0K	JAN 20/09
31-11-36- 3	0L	JAN 20/09
31-11-36- 3	0M	JAN 20/09
31-11-36- 3	0N	JAN 20/09
31-11-36- 3	0O	JAN 20/09
31-11-36- 3	0P	JAN 20/09
31-11-36- 3	0Q	JAN 20/09
31-11-36- 3	0R	JAN 20/09
31-11-36- 3	0S	JAN 20/09
31-11-36- 3	0T	JAN 20/09
31-11-36- 3	0U	JAN 20/09
31-11-36- 3	0V	JAN 20/09
31-11-36- 3	0W	JAN 20/09
31-11-36- 3	0X	JAN 20/09
*31-11-36- 3	1	MAY 20/09
*31-11-36- 3	2	MAY 20/09
*31-11-36- 3	3	MAY 20/09
*31-11-36- 3	4	MAY 20/09
*31-11-36- 3	5	MAY 20/09
*31-11-36- 3	6	MAY 20/09
*31-11-36- 3	7	MAY 20/09
31-11-36- 3	8	JAN 20/09
31-11-36- 3	9	JAN 20/09
31-11-36- 3	10	JAN 20/09
31-11-36- 3	11	JAN 20/09
31-11-36- 3	12	JAN 20/09
31-11-36- 3	13	JAN 20/09
31-11-36- 3	14	JAN 20/09
31-11-36- 3	15	JAN 20/09
31-11-36- 3	16	JAN 20/09
31-11-36- 3	17	JAN 20/09
31-11-36- 3	18	JAN 20/09
31-11-36- 3	19	JAN 20/09
31-11-36- 3	20	JAN 20/09
31-11-36- 3	21	JAN 20/09
31-11-36- 3	22	JAN 20/09
31-11-36- 3	23	JAN 20/09
31-11-36- 3	24	JAN 20/09
31-11-36- 3	25	JAN 20/09
31-11-36- 3	26	JAN 20/09
31-11-36- 3	27	JAN 20/09
31-11-36- 3	28	JAN 20/09
31-11-36- 3	29	JAN 20/09

CH-SECT-UNIT-FIG	PAGE NO.	DATE
31-11-36- 3	30	JAN 20/09
*31-11-36- 3	31	MAY 20/09
*31-11-36- 3	32	MAY 20/09
31-11-36- 3	33	JAN 20/09
31-11-36- 3	34	JAN 20/09
31-11-36- 3	35	JAN 20/09
31-11-36- 3	36	JAN 20/09
31-11-36- 3	37	JAN 20/09
31-11-36- 3	38	JAN 20/09
31-11-36- 3	39	JAN 20/09
31-11-36- 3	40	JAN 20/09
31-11-36- 3	41	JAN 20/09
31-11-36- 3	42	JAN 20/09
31-11-36- 3	43	JAN 20/09
31-11-36- 3	44	JAN 20/09
31-11-36- 3	45	JAN 20/09
31-11-36- 3	46	JAN 20/09
31-11-36- 3	47	JAN 20/09
31-11-36- 3	48	JAN 20/09
31-11-36-25	0	JAN 20/09
31-11-36-25	0A	JAN 20/09
31-11-36-25	0B	JAN 20/09
31-11-36-25	0C	JAN 20/09
31-11-36-25	0D	JAN 20/09
31-11-36-25	0E	JAN 20/09
31-11-36-25	0F	JAN 20/09
31-11-36-25	0G	JAN 20/09
31-11-36-25	0H	JAN 20/09
31-11-36-25	0I	JAN 20/09
31-11-36-25	0J	JAN 20/09
31-11-36-25	0K	JAN 20/09
31-11-36-25	0L	JAN 20/09
31-11-36-25	0M	JAN 20/09
31-11-36-25	0N	JAN 20/09
31-11-36-25	0O	JAN 20/09
31-11-36-25	0P	JAN 20/09
31-11-36-25	0Q	JAN 20/09
31-11-36-25	0R	JAN 20/09
31-11-36-25	0S	JAN 20/09
31-11-36-25	0T	JAN 20/09
31-11-36-25	0U	JAN 20/09
31-11-36-25	0V	JAN 20/09
31-11-36-25	1	JAN 20/09
31-11-36-25	2	JAN 20/09
31-11-36-25	3	JAN 20/09
31-11-36-25	4	JAN 20/09
31-11-36-25	5	JAN 20/09
31-11-36-25	6	JAN 20/09
*31-11-36-25	7	MAY 20/09
*31-11-36-25	8	MAY 20/09
*31-11-36-25	9	MAY 20/09

*** THE ASTERISK INDICATES PAGES CHANGED OR ADDED BY THE CURRENT REVISION**

BOEING PROPRIETARY - Copyright © - Unpublished Work - See title page for details.

CH-SECT-UNIT-FIG	PAGE NO.	DATE
*31-11-36-25	10	MAY 20/09
*31-11-36-25	11	MAY 20/09
*31-11-36-25	12	MAY 20/09
*31-11-36-25	13	MAY 20/09
*31-11-36-25	14	MAY 20/09
*31-11-36-25	15	MAY 20/09
*31-11-36-25	16	MAY 20/09
*31-11-36-25	17	MAY 20/09
*31-11-36-25	18	MAY 20/09
*31-11-36-25	19	MAY 20/09
*31-11-36-25	20	MAY 20/09
*31-11-36-25	21	MAY 20/09
*31-11-36-25	22	MAY 20/09
*31-11-36-25	23	MAY 20/09
*31-11-36-25	24	MAY 20/09
*31-11-36-25	25	MAY 20/09
*31-11-36-25	26	MAY 20/09
*31-11-36-25	27	MAY 20/09
*31-11-36-25	28	MAY 20/09
*31-11-36-25	29	MAY 20/09
*31-11-36-25	30	MAY 20/09
*31-11-36-25	31	MAY 20/09
*31-11-36-25	32	MAY 20/09
*31-11-36-25	33	MAY 20/09
*31-11-36-25	34	MAY 20/09
*31-11-36-25	35	MAY 20/09
*31-11-36-25	36	MAY 20/09
*31-11-36-25	37	MAY 20/09
*31-11-36-25	38	MAY 20/09
*31-11-36-25	39	MAY 20/09
*31-11-36-25	40	MAY 20/09
31-11-36-26	0	MAY 28/07
31-11-36-26	0A	MAY 28/07
31-11-36-26	0B	MAY 28/07
31-11-36-26	0C	MAY 28/07
31-11-36-26	0D	MAY 28/07
31-11-36-26	0E	MAY 28/07
31-11-36-26	0F	MAY 28/07
31-11-36-26	0G	MAY 28/07
31-11-36-26	0H	MAY 28/07
31-11-36-26	0I	MAY 28/07
31-11-36-26	0J	MAY 28/07
31-11-36-26	0K	MAY 28/07
31-11-36-26	0L	MAY 28/07
31-11-36-26	0M	MAY 28/07
31-11-36-26	0N	MAY 28/07
31-11-36-26	0O	MAY 28/07
31-11-36-26	0P	MAY 28/07
31-11-36-26	0Q	MAY 28/07
31-11-36-26	0R	MAY 28/07
31-11-36-26	0S	MAY 28/07

CH-SECT-UNIT-FIG	PAGE NO.	DATE
31-11-36-26	0T	MAY 28/07
31-11-36-26	0U	MAY 28/07
31-11-36-26	0V	MAY 28/07
*31-11-36-26	1	MAY 20/09
*31-11-36-26	2	MAY 20/09
*31-11-36-26	3	MAY 20/09
*31-11-36-26	4	MAY 20/09
*31-11-36-26	5	MAY 20/09
31-11-36-26	6	JAN 20/09
31-11-36-26	7	JAN 20/09
31-11-36-26	8	JAN 20/09
31-11-36-26	9	JAN 20/09
31-11-36-26	10	JAN 20/09
31-11-36-26	11	JAN 20/09
31-11-36-26	12	JAN 20/09
31-11-36-26	13	JAN 20/09
31-11-36-26	14	JAN 20/09
31-11-36-26	15	JAN 20/09
31-11-36-26	16	JAN 20/09
31-11-36-26	17	JAN 20/09
31-11-36-26	18	JAN 20/09
31-11-36-26	19	JAN 20/09
31-11-36-26	20	JAN 20/09
31-11-36-26	21	JAN 20/09
31-11-36-26	22	JAN 20/09
31-11-36-26	23	JAN 20/09
31-11-36-26	24	JAN 20/09
31-11-36-26	25	JAN 20/09
31-11-36-26	26	JAN 20/09
31-11-36-26	27	JAN 20/09
31-11-36-26	28	JAN 20/09
*31-11-36-26	29	MAY 20/09
31-11-36-26	30	JAN 20/09
31-11-36-26	31	JAN 20/09
31-11-36-26	32	JAN 20/09
31-11-36-26	33	JAN 20/09
31-11-36-26	34	JAN 20/09
31-11-36-26	35	JAN 20/09
31-11-36-26	36	JAN 20/09
31-11-36-26	37	JAN 20/09
31-11-36-26	38	JAN 20/09
31-11-36-26	39	JAN 20/09
31-11-36-26	40	JAN 20/09
31-11-36-26	41	JAN 20/09
31-11-36-26	42	JAN 20/09
31-11-36-26	43	JAN 20/09
31-11-36-26	44	JAN 20/09
31-11-36-26	45	JAN 20/09
31-11-36-26	46	JAN 20/09
31-11-36-26	47	JAN 20/09
31-11-36-26	48	JAN 20/09

* THE ASTERISK INDICATES PAGES CHANGED OR ADDED BY THE CURRENT REVISION

BOEING PROPRIETARY - Copyright © - Unpublished Work - See title page for details.

CH-SECT-UNIT-FIG	PAGE NO.	DATE
31-11-36-30	0	JAN 20/09
31-11-36-30	0A	JAN 20/09
31-11-36-30	0B	JAN 20/09
31-11-36-30	0C	JAN 20/09
31-11-36-30	0D	JAN 20/09
31-11-36-30	0E	JAN 20/09
31-11-36-30	0F	JAN 20/09
31-11-36-30	0G	JAN 20/09
31-11-36-30	0H	JAN 20/09
31-11-36-30	0I	JAN 20/09
31-11-36-30	0J	JAN 20/09
31-11-36-30	0K	JAN 20/09
31-11-36-30	0L	JAN 20/09
31-11-36-30	0M	JAN 20/09
31-11-36-30	0N	JAN 20/09
31-11-36-30	0O	JAN 20/09
31-11-36-30	0P	JAN 20/09
31-11-36-30	0Q	JAN 20/09
31-11-36-30	0R	JAN 20/09
31-11-36-30	1	JAN 20/09
31-11-36-30	2	JAN 20/09
31-11-36-30	3	JAN 20/09
31-11-36-30	4	JAN 20/09
31-11-36-30	5	JAN 20/09
31-11-36-30	6	JAN 20/09
31-11-36-30	7	JAN 20/09
31-11-36-30	8	JAN 20/09
31-11-36-30	9	JAN 20/09
*31-11-36-30	10	MAY 20/09
*31-11-36-30	11	MAY 20/09
*31-11-36-30	12	MAY 20/09
*31-11-36-30	13	MAY 20/09
*31-11-36-30	14	MAY 20/09
*31-11-36-30	15	MAY 20/09
*31-11-36-30	16	MAY 20/09
*31-11-36-30	17	MAY 20/09
*31-11-36-30	18	MAY 20/09
*31-11-36-30	19	MAY 20/09
*31-11-36-30	20	MAY 20/09
*31-11-36-30	21	MAY 20/09
*31-11-36-30	22	MAY 20/09
*31-11-36-30	23	MAY 20/09
*31-11-36-30	24	MAY 20/09
*31-11-36-30	25	MAY 20/09
*31-11-36-30	26	MAY 20/09
*31-11-36-30	27	MAY 20/09
*31-11-36-30	28	MAY 20/09
*31-11-36-30	29	MAY 20/09
*31-11-36-30	30	MAY 20/09
*31-11-36-30	31	MAY 20/09
31-11-36-55	0	JAN 20/09

CH-SECT-UNIT-FIG	PAGE NO.	DATE
31-11-36-55	0A	JAN 20/09
31-11-36-55	0B	JAN 20/09
31-11-36-55	0C	JAN 20/09
31-11-36-55	0D	JAN 20/09
31-11-36-55	0E	JAN 20/09
31-11-36-55	0F	JAN 20/09
31-11-36-55	0G	JAN 20/09
31-11-36-55	0H	JAN 20/09
31-11-36-55	0I	JAN 20/09
31-11-36-55	0J	JAN 20/09
31-11-36-55	0K	JAN 20/09
31-11-36-55	0L	JAN 20/09
31-11-36-55	0M	JAN 20/09
31-11-36-55	0N	JAN 20/09
31-11-36-55	0O	JAN 20/09
31-11-36-55	1	JAN 20/09
31-11-36-55	2	JAN 20/09
31-11-36-55	3	JAN 20/09
31-11-36-55	4	JAN 20/09
31-11-36-55	5	JAN 20/09
*31-11-36-55	6	MAY 20/09
*31-11-36-55	7	MAY 20/09
*31-11-36-55	8	MAY 20/09
*31-11-36-55	9	MAY 20/09
31-11-36-55	10	JAN 20/09
31-11-36-55	11	JAN 20/09
31-11-36-55	12	JAN 20/09
31-11-36-55	13	JAN 20/09
31-11-36-55	14	JAN 20/09
31-11-36-55	15	JAN 20/09
31-11-36-55	16	JAN 20/09
31-11-36-55	17	JAN 20/09
*31-11-36-55	18	MAY 20/09
*31-11-36-55	19	MAY 20/09
*31-11-36-55	20	MAY 20/09
*31-11-36-55	21	MAY 20/09
*31-11-36-55	22	MAY 20/09
*31-11-36-55	23	MAY 20/09
*31-11-36-55	24	MAY 20/09
*31-11-36-55	25	MAY 20/09
*31-11-36-55	26	MAY 20/09
*31-11-36-55	27	MAY 20/09
*31-11-36-55	28	MAY 20/09
*31-11-36-55	29	MAY 20/09
31-11-36-55	30	JAN 20/09
31-11-36-55	31	JAN 20/09
31-11-36-67	0	JAN 20/09
31-11-36-67	0A	JAN 20/09
31-11-36-67	0B	JAN 20/09
31-11-36-67	0C	JAN 20/09
31-11-36-67	0D	JAN 20/09

*** THE ASTERISK INDICATES PAGES CHANGED OR ADDED BY THE CURRENT REVISION**

BOEING PROPRIETARY - Copyright © - Unpublished Work - See title page for details.

CH-SECT-UNIT-FIG	PAGE NO.	DATE
31-11-36-67	0E	JAN 20/09
31-11-36-67	0F	JAN 20/09
31-11-36-67	0G	JAN 20/09
31-11-36-67	0H	JAN 20/09
31-11-36-67	0I	JAN 20/09
31-11-36-67	0J	JAN 20/09
31-11-36-67	0K	JAN 20/09
31-11-36-67	0L	JAN 20/09
31-11-36-67	0M	JAN 20/09
31-11-36-67	0N	JAN 20/09
31-11-36-67	0O	JAN 20/09
31-11-36-67	0P	JAN 20/09
31-11-36-67	0Q	JAN 20/09
31-11-36-67	0R	JAN 20/09
31-11-36-67	1	JAN 20/09
31-11-36-67	2	JAN 20/09
31-11-36-67	3	JAN 20/09
31-11-36-67	4	JAN 20/09
31-11-36-67	5	JAN 20/09
31-11-36-67	6	JAN 20/09
31-11-36-67	7	JAN 20/09
31-11-36-67	8	JAN 20/09
31-11-36-67	9	JAN 20/09
*31-11-36-67	10	MAY 20/09
31-11-36-67	11	JAN 20/09
31-11-36-67	12	JAN 20/09
31-11-36-67	13	JAN 20/09
31-11-36-67	14	JAN 20/09
31-11-36-67	15	JAN 20/09
31-11-36-67	16	JAN 20/09
31-11-36-67	17	JAN 20/09
31-11-36-67	18	JAN 20/09
*31-11-36-67	19	MAY 20/09
31-11-36-67	20	JAN 20/09
*31-11-36-67	21	MAY 20/09
*31-11-36-67	22	MAY 20/09
*31-11-36-67	23	MAY 20/09
*31-11-36-67	24	MAY 20/09
*31-11-36-67	25	MAY 20/09
*31-11-36-67	26	MAY 20/09
*31-11-36-67	27	MAY 20/09
*31-11-36-67	28	MAY 20/09
*31-11-36-67	29	MAY 20/09
*31-11-36-67	30	MAY 20/09
*31-11-36-67	31	MAY 20/09
*31-11-36-67	32	MAY 20/09
*31-11-36-67	33	MAY 20/09
*31-11-36-67	34	MAY 20/09
*31-11-36-67	35	MAY 20/09
*31-11-36-67	36	MAY 20/09
*31-11-36-67	37	MAY 20/09

CH-SECT-UNIT-FIG	PAGE NO.	DATE
*31-11-36-67	38	MAY 20/09
*31-11-36-67	39	MAY 20/09
31-11-36-70	0	MAY 28/07
31-11-36-70	0A	MAY 28/07
31-11-36-70	0B	MAY 28/07
31-11-36-70	0C	MAY 28/07
31-11-36-70	0D	MAY 28/07
31-11-36-70	0E	MAY 28/07
31-11-36-70	0F	MAY 28/07
31-11-36-70	0G	MAY 28/07
31-11-36-70	0H	MAY 28/07
31-11-36-70	0I	MAY 28/07
31-11-36-70	0J	MAY 28/07
31-11-36-70	0K	MAY 28/07
31-11-36-70	0L	MAY 28/07
31-11-36-70	0M	MAY 28/07
31-11-36-70	0N	MAY 28/07
31-11-36-70	0O	MAY 28/07
31-11-36-70	0P	MAY 28/07
31-11-36-70	0Q	MAY 28/07
31-11-36-70	0R	MAY 28/07
31-11-36-70	0S	MAY 28/07
31-11-36-70	1	JAN 20/09
31-11-36-70	2	JAN 20/09
31-11-36-70	3	JAN 20/09
31-11-36-70	4	JAN 20/09
31-11-36-70	5	JAN 20/09
31-11-36-70	6	JAN 20/09
31-11-36-70	7	JAN 20/09
31-11-36-70	8	JAN 20/09
31-11-36-70	9	JAN 20/09
31-11-36-70	10	JAN 20/09
31-11-36-70	11	JAN 20/09
*31-11-36-70	12	MAY 20/09
*31-11-36-70	13	MAY 20/09
*31-11-36-70	14	MAY 20/09
*31-11-36-70	15	MAY 20/09
*31-11-36-70	16	MAY 20/09
*31-11-36-70	17	MAY 20/09
*31-11-36-70	18	MAY 20/09
*31-11-36-70	19	MAY 20/09
*31-11-36-70	20	MAY 20/09
*31-11-36-70	21	MAY 20/09
*31-11-36-70	22	MAY 20/09
*31-11-36-70	23	MAY 20/09
*31-11-36-70	24	MAY 20/09
*31-11-36-70	25	MAY 20/09
*31-11-36-70	26	MAY 20/09
31-11-36-70	27	JAN 20/09
31-11-36-70	28	JAN 20/09
31-11-36-70	29	JAN 20/09

*** THE ASTERISK INDICATES PAGES CHANGED OR ADDED BY THE CURRENT REVISION**

BOEING PROPRIETARY - Copyright © - Unpublished Work - See title page for details.

CH-SECT-UNIT-FIG	PAGE NO.	DATE
31-11-36-70	30	JAN 20/09
31-11-36-70	31	JAN 20/09
31-11-36-70	32	JAN 20/09
31-11-36-70	33	JAN 20/09
31-11-36-70	34	JAN 20/09
31-11-36-70	35	JAN 20/09
31-11-36-70	36	JAN 20/09
31-11-36-70	37	JAN 20/09
31-11-36-70	38	JAN 20/09
31-11-36-70	39	JAN 20/09
31-11-36-70	40	JAN 20/09
31-11-36-78	0	JAN 20/09
31-11-36-78	0A	JAN 20/09
31-11-36-78	0B	JAN 20/09
31-11-36-78	0C	JAN 20/09
31-11-36-78	0D	JAN 20/09
31-11-36-78	0E	JAN 20/09
31-11-36-78	0F	JAN 20/09
31-11-36-78	0G	JAN 20/09
31-11-36-78	0H	JAN 20/09
31-11-36-78	0I	JAN 20/09
31-11-36-78	0J	JAN 20/09
31-11-36-78	0K	JAN 20/09
31-11-36-78	0L	JAN 20/09
31-11-36-78	0M	JAN 20/09
31-11-36-78	0N	JAN 20/09
31-11-36-78	0O	JAN 20/09
31-11-36-78	0P	JAN 20/09
31-11-36-78	0Q	JAN 20/09
31-11-36-78	0R	JAN 20/09
31-11-36-78	0S	JAN 20/09
31-11-36-78	0T	JAN 20/09
31-11-36-78	0U	JAN 20/09
31-11-36-78	1	JAN 20/09
31-11-36-78	2	JAN 20/09
31-11-36-78	3	JAN 20/09
31-11-36-78	4	JAN 20/09
31-11-36-78	5	JAN 20/09
31-11-36-78	6	JAN 20/09
31-11-36-78	7	JAN 20/09
31-11-36-78	8	JAN 20/09
*31-11-36-78	9	MAY 20/09
*31-11-36-78	10	MAY 20/09
*31-11-36-78	11	MAY 20/09
*31-11-36-78	12	MAY 20/09
31-11-36-78	13	JAN 20/09
31-11-36-78	14	JAN 20/09
31-11-36-78	15	JAN 20/09
31-11-36-78	16	JAN 20/09
31-11-36-78	17	JAN 20/09
31-11-36-78	18	JAN 20/09

CH-SECT-UNIT-FIG	PAGE NO.	DATE
31-11-36-78	19	JAN 20/09
31-11-36-78	20	JAN 20/09
31-11-36-78	21	JAN 20/09
31-11-36-78	22	JAN 20/09
31-11-36-78	23	JAN 20/09
31-11-36-78	24	JAN 20/09
31-11-36-78	25	JAN 20/09
31-11-36-78	26	JAN 20/09
31-11-36-78	27	JAN 20/09
31-11-36-78	28	JAN 20/09
*31-11-36-78	29	MAY 20/09
*31-11-36-78	30	MAY 20/09
*31-11-36-78	31	MAY 20/09
*31-11-36-78	32	MAY 20/09
*31-11-36-78	33	MAY 20/09
*31-11-36-78	34	MAY 20/09
*31-11-36-78	35	MAY 20/09
*31-11-36-78	36	MAY 20/09
*31-11-36-78	37	MAY 20/09
31-11-36-78	38	JAN 20/09
31-11-36-78	39	JAN 20/09
31-11-36-78	40	JAN 20/09
31-11-36-78	41	JAN 20/09
31-11-36-78	42	JAN 20/09
31-11-41- 1	0	SEP 20/08
31-11-41- 1	1	JAN 20/09
31-11-41- 1	2	JAN 20/09
31-11-41- 1	3	JAN 20/09
31-11-41- 1	4	JAN 20/09
31-11-41- 2	0	SEP 20/08
31-11-41- 2	1	JAN 20/09
31-11-41- 2	2	JAN 20/09
31-11-41- 2	3	JAN 20/09
31-12-00	1	MAY 28/07
31-12-11- 1	0	JAN 20/08
31-12-11- 1	0A	MAY 28/07
31-12-11- 1	0B	MAY 28/07
31-12-11- 1	0C	MAY 28/07
31-12-11- 1	0D	MAY 28/07
31-12-11- 1	0E	MAY 28/07
31-12-11- 1	0F	MAY 28/07
31-12-11- 1	0G	MAY 28/07
31-12-11- 1	0H	MAY 28/07
31-12-11- 1	0I	MAY 28/07
31-12-11- 1	0J	MAY 28/07
31-12-11- 1	0K	MAY 28/07
31-12-11- 1	1	JAN 20/09
31-12-11- 1	2	JAN 20/09
31-12-11- 1	3	JAN 20/09
31-12-11- 1	4	JAN 20/09
31-12-11- 1	5	JAN 20/09

* THE ASTERISK INDICATES PAGES CHANGED OR ADDED BY THE CURRENT REVISION

BOEING PROPRIETARY - Copyright © - Unpublished Work - See title page for details.

CH-SECT-UNIT-FIG	PAGE NO.	DATE
31-12-11- 1	6	JAN 20/09
31-12-11- 1	7	JAN 20/09
31-12-11- 1	8	JAN 20/09
31-12-11- 1	9	JAN 20/09
31-12-11- 1	10	JAN 20/09
31-12-11- 1	11	JAN 20/09
31-12-11- 1	12	JAN 20/09
31-12-11- 1	13	JAN 20/09
31-12-11- 1	14	JAN 20/09
31-12-11- 1	15	JAN 20/09
31-12-11- 1	16	JAN 20/09
31-12-11- 1	17	JAN 20/09
31-12-11- 1	18	JAN 20/09
31-12-11- 1	19	JAN 20/09
31-12-11- 1	20	JAN 20/09
31-12-11- 1	21	JAN 20/09
31-12-11- 1	22	JAN 20/09
31-12-11- 1	23	JAN 20/09
31-12-11- 1	24	JAN 20/09
31-12-11- 1	25	JAN 20/09
31-12-11- 1	26	JAN 20/09
31-12-11- 1	27	JAN 20/09
31-12-11- 1	28	JAN 20/09
31-12-11- 1	29	JAN 20/09
31-12-11- 1	30	JAN 20/09
31-12-11- 1	31	JAN 20/09
31-12-11- 1	32	JAN 20/09
31-12-11- 1	33	JAN 20/09
31-12-11- 1	34	JAN 20/09
31-12-11- 1	35	JAN 20/09
31-12-11- 1	36	JAN 20/09
31-12-11- 1	37	JAN 20/09
31-12-11- 1	38	JAN 20/09
31-12-11- 1	39	JAN 20/09
31-12-11- 1	40	JAN 20/09
31-12-11- 1	41	JAN 20/09
31-12-11- 1	42	JAN 20/09
31-12-11- 1	43	JAN 20/09
31-12-11- 1	44	JAN 20/09
31-12-11- 1	45	JAN 20/09
31-12-11- 1	46	JAN 20/09
31-12-11- 1	47	JAN 20/09
31-12-11- 1A	0	MAY 28/07
31-12-11- 1A	0A	MAY 28/07
31-12-11- 1A	0B	MAY 28/07
31-12-11- 1A	0C	MAY 28/07
31-12-11- 1A	0D	MAY 28/07
31-12-11- 1A	0E	MAY 28/07
31-12-11- 1A	0F	MAY 28/07
31-12-11- 1A	0G	MAY 28/07
31-12-11- 1A	0H	MAY 28/07

CH-SECT-UNIT-FIG	PAGE NO.	DATE
31-12-11- 1A	1	JAN 20/09
31-12-11- 1A	2	JAN 20/09
31-12-11- 1A	3	JAN 20/09
31-12-11- 1A	4	JAN 20/09
31-12-11- 1A	5	JAN 20/09
31-12-11- 1A	6	JAN 20/09
31-12-11- 1A	7	JAN 20/09
31-12-11- 1A	8	JAN 20/09
31-12-11- 1A	9	JAN 20/09
31-12-11- 1A	10	JAN 20/09
31-12-11- 1A	11	JAN 20/09
31-12-11- 1A	12	JAN 20/09
31-12-11- 1A	13	JAN 20/09
31-12-11- 1A	14	JAN 20/09
31-12-11- 1A	15	JAN 20/09
31-12-11- 1A	16	JAN 20/09
31-12-11- 1A	17	JAN 20/09
31-12-11- 5	0	JAN 20/09
31-12-11- 5	0A	JAN 20/09
31-12-11- 5	0B	JAN 20/09
31-12-11- 5	0C	JAN 20/09
31-12-11- 5	0D	JAN 20/09
31-12-11- 5	0E	JAN 20/09
31-12-11- 5	0F	JAN 20/09
31-12-11- 5	0G	JAN 20/09
31-12-11- 5	0H	JAN 20/09
31-12-11- 5	1	JAN 20/09
31-12-11- 5	2	JAN 20/09
31-12-11- 5	3	JAN 20/09
31-12-11- 5	4	JAN 20/09
31-12-11- 5	5	JAN 20/09
31-12-11- 5	6	JAN 20/09
31-12-11- 5	7	JAN 20/09
31-12-11- 5	8	JAN 20/09
31-12-11- 5	9	JAN 20/09
31-12-11- 5	10	JAN 20/09
31-12-11- 5	11	JAN 20/09
31-12-11- 5	12	JAN 20/09
31-12-11- 5	13	JAN 20/09
31-12-11- 5	14	JAN 20/09
31-12-11- 5	15	JAN 20/09
31-12-11- 5	16	JAN 20/09
31-12-11- 5	17	JAN 20/09
31-12-11- 5	18	JAN 20/09
31-12-11- 5	19	JAN 20/09
31-12-11- 5	20	JAN 20/09
31-12-11- 5	21	JAN 20/09
31-12-11- 5	22	JAN 20/09
31-12-11- 5	23	JAN 20/09
31-12-11- 5	24	JAN 20/09
31-12-11- 5	25	JAN 20/09

* THE ASTERISK INDICATES PAGES CHANGED OR ADDED BY THE CURRENT REVISION

BOEING PROPRIETARY - Copyright © - Unpublished Work - See title page for details.

CH-SECT-UNIT-FIG	PAGE NO.	DATE
31-12-11- 5	26	JAN 20/09
31-12-11- 5	27	JAN 20/09
31-12-11- 5	28	JAN 20/09
31-12-11- 5	29	JAN 20/09
31-12-11- 5	30	JAN 20/09
31-12-11- 5	31	JAN 20/09
31-12-11- 5	32	JAN 20/09
31-12-11- 5	33	JAN 20/09
31-12-11- 5	34	JAN 20/09
31-12-11- 5A	0	JAN 20/09
31-12-11- 5A	0A	JAN 20/09
31-12-11- 5A	0B	JAN 20/09
31-12-11- 5A	0C	JAN 20/09
31-12-11- 5A	0D	JAN 20/09
31-12-11- 5A	0E	JAN 20/09
31-12-11- 5A	0F	JAN 20/09
31-12-11- 5A	0G	JAN 20/09
31-12-11- 5A	1	JAN 20/09
31-12-11- 5A	2	JAN 20/09
31-12-11- 5A	3	JAN 20/09
31-12-11- 5A	4	JAN 20/09
31-12-11- 5A	5	JAN 20/09
31-12-11- 5A	6	JAN 20/09
31-12-11- 5A	7	JAN 20/09
31-12-11- 5A	8	JAN 20/09
31-12-11- 5A	9	JAN 20/09
31-12-11- 5A	10	JAN 20/09
31-12-11- 5A	11	JAN 20/09
31-12-11- 5A	12	JAN 20/09
31-12-11- 7	0	MAY 20/08
31-12-11- 7	0A	MAY 28/07
31-12-11- 7	0B	MAY 28/07
31-12-11- 7	0C	MAY 28/07
31-12-11- 7	0D	MAY 28/07
31-12-11- 7	0E	MAY 28/07
31-12-11- 7	0F	MAY 28/07
31-12-11- 7	0G	MAY 20/08
31-12-11- 7	0H	MAY 28/07
31-12-11- 7	1	JAN 20/09
31-12-11- 7	2	JAN 20/09
31-12-11- 7	3	JAN 20/09
31-12-11- 7	4	JAN 20/09
31-12-11- 7	5	JAN 20/09
31-12-11- 7	6	JAN 20/09
31-12-11- 7	7	JAN 20/09
31-12-11- 7	8	JAN 20/09
31-12-11- 7	9	JAN 20/09
31-12-11- 7	10	JAN 20/09
31-12-11- 7	11	JAN 20/09
31-12-11- 7	12	JAN 20/09
31-12-11- 7	13	JAN 20/09

CH-SECT-UNIT-FIG	PAGE NO.	DATE
31-12-11- 7	14	JAN 20/09
31-12-11- 7	15	JAN 20/09
31-12-11- 7	16	JAN 20/09
31-12-11- 7	17	JAN 20/09
31-12-11- 7	18	JAN 20/09
31-12-11- 7	19	JAN 20/09
31-12-11- 7	20	JAN 20/09
31-12-11- 7	21	JAN 20/09
31-12-11- 7	22	JAN 20/09
31-12-11- 7	23	JAN 20/09
31-12-11- 7	24	JAN 20/09
31-12-11- 7	25	JAN 20/09
31-12-11- 7	26	JAN 20/09
31-12-11- 7	27	JAN 20/09
31-12-11- 7	28	JAN 20/09
31-12-11- 7	29	JAN 20/09
31-12-11- 7	30	JAN 20/09
31-12-11- 7	31	JAN 20/09
31-12-11- 7	32	JAN 20/09
31-12-11- 7	33	JAN 20/09
31-12-11- 7	34	JAN 20/09
31-12-11- 7	35	JAN 20/09
31-12-11- 7A	0	MAY 28/07
31-12-11- 7A	0A	JAN 20/09
31-12-11- 7A	0B	MAY 28/07
31-12-11- 7A	0C	MAY 28/07
31-12-11- 7A	0D	MAY 28/07
31-12-11- 7A	0E	MAY 28/07
31-12-11- 7A	0F	MAY 28/07
31-12-11- 7A	0G	MAY 28/07
31-12-11- 7A	0H	MAY 28/07
31-12-11- 7A	1	JAN 20/09
31-12-11- 7A	2	JAN 20/09
31-12-11- 7A	3	JAN 20/09
31-12-11- 7A	4	JAN 20/09
31-12-11- 7A	5	JAN 20/09
31-12-11- 7A	6	JAN 20/09
31-12-11- 7A	7	JAN 20/09
31-12-11- 7A	8	JAN 20/09
31-12-11- 7A	9	JAN 20/09
31-12-11- 7A	10	JAN 20/09
31-12-11- 7A	11	JAN 20/09
31-12-11- 7A	12	JAN 20/09
31-12-11- 7A	13	JAN 20/09
31-12-11-30	0	MAY 28/07
31-12-11-30	0A	MAY 28/07
31-12-11-30	0B	MAY 28/07
31-12-11-30	0C	MAY 28/07
31-12-11-30	0D	MAY 28/07
31-12-11-30	0E	MAY 28/07
31-12-11-30	0F	MAY 28/07

*** THE ASTERISK INDICATES PAGES CHANGED OR ADDED BY THE CURRENT REVISION**

BOEING PROPRIETARY - Copyright © - Unpublished Work - See title page for details.

CH-SECT-UNIT-FIG	PAGE NO.	DATE
31-12-11-30	0G	MAY 28/07
31-12-11-30	0H	MAY 28/07
31-12-11-30	1	JAN 20/09
*31-12-11-30	2	MAY 20/09
*31-12-11-30	3	MAY 20/09
*31-12-11-30	4	MAY 20/09
*31-12-11-30	5	MAY 20/09
31-12-11-30	6	JAN 20/09
31-12-11-30	7	JAN 20/09
31-12-11-30	8	JAN 20/09
31-12-11-30	9	JAN 20/09
*31-12-11-30	10	MAY 20/09
*31-12-11-30	11	MAY 20/09
*31-12-11-30	12	MAY 20/09
*31-12-11-30	13	MAY 20/09
*31-12-11-30	14	MAY 20/09
*31-12-11-30	15	MAY 20/09
*31-12-11-30	16	MAY 20/09
*31-12-11-30	17	MAY 20/09
*31-12-11-30	18	MAY 20/09
*31-12-11-30	19	MAY 20/09
*31-12-11-30	20	MAY 20/09
*31-12-11-30	21	MAY 20/09
*31-12-11-30	22	MAY 20/09
*31-12-11-30	23	MAY 20/09
*31-12-11-30	24	MAY 20/09
*31-12-11-30	25	MAY 20/09
*31-12-11-30	26	MAY 20/09
*31-12-11-30	27	MAY 20/09
*31-12-11-30	28	MAY 20/09
*31-12-11-30	29	MAY 20/09
*31-12-11-30	30	MAY 20/09
*31-12-11-30	31	MAY 20/09
*31-12-11-30	32	MAY 20/09
*31-12-11-30	33	MAY 20/09
31-12-11-30A	0	MAY 28/07
31-12-11-30A	0A	MAY 28/07
31-12-11-30A	0B	MAY 28/07
31-12-11-30A	0C	MAY 28/07
31-12-11-30A	0D	MAY 28/07
31-12-11-30A	0E	MAY 28/07
31-12-11-30A	1	JAN 20/09
31-12-11-30A	2	JAN 20/09
31-12-11-30A	3	JAN 20/09
31-12-11-30A	4	JAN 20/09
31-12-11-30A	5	JAN 20/09
31-12-11-30A	6	JAN 20/09
31-12-11-30A	7	JAN 20/09
31-12-11-30A	8	JAN 20/09
31-12-11-30A	9	JAN 20/09
31-12-11-30A	10	JAN 20/09

CH-SECT-UNIT-FIG	PAGE NO.	DATE
31-12-11-30A	11	JAN 20/09
31-12-11-30A	12	JAN 20/09
31-12-11-30A	13	JAN 20/09
31-12-11-30A	14	JAN 20/09
31-12-11-30A	15	JAN 20/09
31-12-11-30A	16	JAN 20/09
31-12-11-54	0	MAY 28/07
31-12-11-54	0A	MAY 28/07
31-12-11-54	0B	MAY 28/07
31-12-11-54	0C	JAN 20/09
31-12-11-54	0D	MAY 28/07
31-12-11-54	0E	MAY 28/07
31-12-11-54	0F	MAY 28/07
31-12-11-54	0G	MAY 28/07
31-12-11-54	0H	MAY 28/07
31-12-11-54	1	JAN 20/09
31-12-11-54	2	JAN 20/09
31-12-11-54	3	JAN 20/09
31-12-11-54	4	JAN 20/09
31-12-11-54	5	JAN 20/09
31-12-11-54	6	JAN 20/09
31-12-11-54	7	JAN 20/09
31-12-11-54	8	JAN 20/09
31-12-11-54	9	JAN 20/09
31-12-11-54	10	JAN 20/09
31-12-11-54	11	JAN 20/09
31-12-11-54	12	JAN 20/09
31-12-11-54	13	JAN 20/09
31-12-11-54	14	JAN 20/09
31-12-11-54	15	JAN 20/09
31-12-11-54	16	JAN 20/09
31-12-11-54	17	JAN 20/09
31-12-11-54	18	JAN 20/09
31-12-11-54	19	JAN 20/09
31-12-11-54	20	JAN 20/09
31-12-11-54	21	JAN 20/09
31-12-11-54	22	JAN 20/09
31-12-11-54	23	JAN 20/09
31-12-11-54	24	JAN 20/09
31-12-11-54	25	JAN 20/09
31-12-11-54	26	JAN 20/09
31-12-11-54	27	JAN 20/09
31-12-11-54	28	JAN 20/09
31-12-11-54	29	JAN 20/09
31-12-11-54	30	JAN 20/09
31-12-11-54	31	JAN 20/09
31-12-11-54	32	JAN 20/09
31-12-11-54	33	JAN 20/09
31-12-11-54	34	JAN 20/09
31-12-11-54	35	JAN 20/09
31-12-11-54A	0	MAY 28/07

*** THE ASTERISK INDICATES PAGES CHANGED OR ADDED BY THE CURRENT REVISION**

BOEING PROPRIETARY - Copyright © - Unpublished Work - See title page for details.

CH-SECT-UNIT-FIG	PAGE NO.	DATE
31-12-11-54A	0A	MAY 28/07
31-12-11-54A	0B	MAY 28/07
31-12-11-54A	0C	MAY 28/07
31-12-11-54A	0D	MAY 28/07
31-12-11-54A	0E	MAY 28/07
31-12-11-54A	0F	MAY 28/07
31-12-11-54A	1	JAN 20/09
31-12-11-54A	2	JAN 20/09
*31-12-11-54A	3	MAY 20/09
*31-12-11-54A	4	MAY 20/09
*31-12-11-54A	5	MAY 20/09
*31-12-11-54A	6	MAY 20/09
31-12-11-54A	7	JAN 20/09
31-12-11-54A	8	JAN 20/09
31-12-11-54A	9	JAN 20/09
31-12-11-54A	10	JAN 20/09
31-12-11-54A	11	JAN 20/09
31-12-11-54A	12	JAN 20/09
31-12-11-54A	13	JAN 20/09
31-12-11-54A	14	JAN 20/09
31-12-11-54A	15	JAN 20/09
31-12-11-54A	16	JAN 20/09
31-12-11-54A	17	JAN 20/09
31-12-11-54A	18	JAN 20/09
31-12-11-54A	19	JAN 20/09
31-12-11-54A	20	JAN 20/09
31-12-11-65	0	JAN 20/09
31-12-11-65	0A	JAN 20/09
31-12-11-65	0B	JAN 20/09
31-12-11-65	0C	JAN 20/09
31-12-11-65	0D	JAN 20/09
31-12-11-65	0E	JAN 20/09
31-12-11-65	0F	JAN 20/09
31-12-11-65	0G	JAN 20/09
31-12-11-65	0H	JAN 20/09
31-12-11-65	1	JAN 20/09
*31-12-11-65	2	MAY 20/09
*31-12-11-65	3	MAY 20/09
*31-12-11-65	4	MAY 20/09
*31-12-11-65	5	MAY 20/09
31-12-11-65	6	JAN 20/09
31-12-11-65	7	JAN 20/09
31-12-11-65	8	JAN 20/09
31-12-11-65	9	JAN 20/09
31-12-11-65	10	JAN 20/09
31-12-11-65	11	JAN 20/09
31-12-11-65	12	JAN 20/09
31-12-11-65	13	JAN 20/09
31-12-11-65	14	JAN 20/09
31-12-11-65	15	JAN 20/09
31-12-11-65	16	JAN 20/09

CH-SECT-UNIT-FIG	PAGE NO.	DATE
31-12-11-65	17	JAN 20/09
31-12-11-65	18	JAN 20/09
31-12-11-65	19	JAN 20/09
31-12-11-65	20	JAN 20/09
31-12-11-65	21	JAN 20/09
31-12-11-65	22	JAN 20/09
31-12-11-65	23	JAN 20/09
31-12-11-65	24	JAN 20/09
31-12-11-65	25	JAN 20/09
31-12-11-65	26	JAN 20/09
31-12-11-65	27	JAN 20/09
31-12-11-65	28	JAN 20/09
31-12-11-65	29	JAN 20/09
31-12-11-65	30	JAN 20/09
31-12-11-65	31	JAN 20/09
31-12-11-65	32	JAN 20/09
31-12-11-65A	0	JAN 20/09
31-12-11-65A	0A	JAN 20/09
31-12-11-65A	0B	JAN 20/09
31-12-11-65A	0C	JAN 20/09
31-12-11-65A	0D	JAN 20/09
31-12-11-65A	0E	JAN 20/09
31-12-11-65A	0F	JAN 20/09
31-12-11-65A	1	JAN 20/09
31-12-11-65A	2	JAN 20/09
31-12-11-65A	3	JAN 20/09
31-12-11-65A	4	JAN 20/09
31-12-11-65A	5	JAN 20/09
31-12-11-65A	6	JAN 20/09
31-12-11-65A	7	JAN 20/09
31-12-11-65A	8	JAN 20/09
31-12-11-65A	9	JAN 20/09
31-12-11-65A	10	JAN 20/09
31-12-11-65A	11	JAN 20/09
31-12-11-65A	12	JAN 20/09
31-12-11-65A	13	JAN 20/09
31-12-11-65A	14	JAN 20/09
31-12-11-65A	15	JAN 20/09
31-12-11-65A	16	JAN 20/09
31-12-11-65A	17	JAN 20/09
31-12-11-65A	18	JAN 20/09
31-12-11-65A	19	JAN 20/09
31-12-11-79	0	JAN 20/09
31-12-11-79	0A	JAN 20/09
31-12-11-79	0B	JAN 20/09
31-12-11-79	0C	JAN 20/09
31-12-11-79	0D	JAN 20/09
31-12-11-79	0E	JAN 20/09
31-12-11-79	0F	JAN 20/09
31-12-11-79	0G	JAN 20/09
31-12-11-79	0H	JAN 20/09

*** THE ASTERISK INDICATES PAGES CHANGED OR ADDED BY THE CURRENT REVISION**

BOEING PROPRIETARY - Copyright © - Unpublished Work - See title page for details.

CH-SECT-UNIT-FIG	PAGE NO.	DATE
31-12-11-79	1	JAN 20/09
31-12-11-79	2	JAN 20/09
*31-12-11-79	3	MAY 20/09
*31-12-11-79	4	MAY 20/09
*31-12-11-79	5	MAY 20/09
*31-12-11-79	6	MAY 20/09
*31-12-11-79	7	MAY 20/09
*31-12-11-79	8	MAY 20/09
*31-12-11-79	9	MAY 20/09
*31-12-11-79	10	MAY 20/09
*31-12-11-79	11	MAY 20/09
*31-12-11-79	12	MAY 20/09
*31-12-11-79	13	MAY 20/09
*31-12-11-79	14	MAY 20/09
*31-12-11-79	15	MAY 20/09
*31-12-11-79	16	MAY 20/09
*31-12-11-79	17	MAY 20/09
*31-12-11-79	18	MAY 20/09
*31-12-11-79	19	MAY 20/09
*31-12-11-79	20	MAY 20/09
*31-12-11-79	21	MAY 20/09
*31-12-11-79	22	MAY 20/09
*31-12-11-79	23	MAY 20/09
*31-12-11-79	24	MAY 20/09
*31-12-11-79	25	MAY 20/09
*31-12-11-79	26	MAY 20/09
*31-12-11-79	27	MAY 20/09
*31-12-11-79	28	MAY 20/09
*31-12-11-79	29	MAY 20/09
*31-12-11-79	30	MAY 20/09
*31-12-11-79	31	MAY 20/09
*31-12-11-79	32	MAY 20/09
31-12-11-79A	0	JAN 20/09
31-12-11-79A	0A	JAN 20/09
31-12-11-79A	0B	JAN 20/09
31-12-11-79A	0C	JAN 20/09
31-12-11-79A	0D	JAN 20/09
31-12-11-79A	0E	JAN 20/09
31-12-11-79A	0F	JAN 20/09
31-12-11-79A	1	JAN 20/09
31-12-11-79A	2	JAN 20/09
*31-12-11-79A	3	MAY 20/09
31-12-11-79A	4	JAN 20/09
31-12-11-79A	5	JAN 20/09
31-12-11-79A	6	JAN 20/09
31-12-11-79A	7	JAN 20/09
31-12-11-79A	8	JAN 20/09
31-12-11-79A	9	JAN 20/09
31-12-11-79A	10	JAN 20/09
31-12-11-79A	11	JAN 20/09
31-12-11-79A	12	JAN 20/09

CH-SECT-UNIT-FIG	PAGE NO.	DATE
31-12-11-79A	13	JAN 20/09
31-12-11-79A	14	JAN 20/09
31-12-11-79A	15	JAN 20/09
31-12-11-79A	16	JAN 20/09
31-12-11-79A	17	JAN 20/09
31-12-11-79A	18	JAN 20/09
31-12-11-79A	19	JAN 20/09
31-12-11-79A	20	JAN 20/09
31-12-11-84	0	JAN 20/09
31-12-11-84	0A	JAN 20/09
31-12-11-84	0B	JAN 20/09
31-12-11-84	0C	JAN 20/09
31-12-11-84	0D	JAN 20/09
31-12-11-84	0E	JAN 20/09
31-12-11-84	0F	JAN 20/09
31-12-11-84	0G	JAN 20/09
31-12-11-84	0H	JAN 20/09
31-12-11-84	0I	JAN 20/09
31-12-11-84	1	JAN 20/09
31-12-11-84	2	JAN 20/09
31-12-11-84	3	JAN 20/09
31-12-11-84	4	JAN 20/09
31-12-11-84	5	JAN 20/09
31-12-11-84	6	JAN 20/09
31-12-11-84	7	JAN 20/09
31-12-11-84	8	JAN 20/09
31-12-11-84	9	JAN 20/09
31-12-11-84	10	JAN 20/09
31-12-11-84	11	JAN 20/09
31-12-11-84	12	JAN 20/09
31-12-11-84	13	JAN 20/09
31-12-11-84	14	JAN 20/09
31-12-11-84	15	JAN 20/09
31-12-11-84	16	JAN 20/09
31-12-11-84	17	JAN 20/09
31-12-11-84	18	JAN 20/09
31-12-11-84A	0	JAN 20/09
31-12-11-84A	0A	JAN 20/09
31-12-11-84A	0B	JAN 20/09
31-12-11-84A	0C	JAN 20/09
31-12-11-84A	0D	JAN 20/09
31-12-11-84A	0E	JAN 20/09
31-12-11-84A	0F	JAN 20/09
31-12-11-84A	0G	JAN 20/09
31-12-11-84A	1	JAN 20/09
31-12-11-84A	2	JAN 20/09
31-12-11-84A	3	JAN 20/09
31-12-11-84A	4	JAN 20/09
31-12-11-84A	5	JAN 20/09
31-12-11-84A	6	JAN 20/09
31-12-11-84A	7	JAN 20/09

*** THE ASTERISK INDICATES PAGES CHANGED OR ADDED BY THE CURRENT REVISION**

BOEING PROPRIETARY - Copyright © - Unpublished Work - See title page for details.

CH-SECT-UNIT-FIG	PAGE NO.	DATE
31-12-11-84A	8	JAN 20/09
31-12-11-84A	9	JAN 20/09
31-12-11-84A	10	JAN 20/09
31-12-11-84A	11	JAN 20/09
31-12-11-84A	12	JAN 20/09
31-12-11-84A	13	JAN 20/09
31-12-11-84A	14	JAN 20/09
31-12-11-84A	15	JAN 20/09
31-12-11-84A	16	JAN 20/09
31-12-11-84A	17	JAN 20/09
31-12-11-84A	18	JAN 20/09
31-12-11-91	0	JAN 20/09
31-12-11-91	0A	JAN 20/09
31-12-11-91	0B	JAN 20/09
31-12-11-91	0C	JAN 20/09
31-12-11-91	0D	JAN 20/09
31-12-11-91	0E	JAN 20/09
31-12-11-91	0F	JAN 20/09
31-12-11-91	0G	JAN 20/09
31-12-11-91	0H	JAN 20/09
31-12-11-91	1	JAN 20/09
31-12-11-91	2	JAN 20/09
31-12-11-91	3	JAN 20/09
31-12-11-91	4	JAN 20/09
31-12-11-91	5	JAN 20/09
31-12-11-91	6	JAN 20/09
31-12-11-91	7	JAN 20/09
31-12-11-91	8	JAN 20/09
31-12-11-91	9	JAN 20/09
31-12-11-91	10	JAN 20/09
31-12-11-91	11	JAN 20/09
31-12-11-91	12	JAN 20/09
31-12-11-91	13	JAN 20/09
31-12-11-91	14	JAN 20/09
31-12-11-91	15	JAN 20/09
31-12-11-91	16	JAN 20/09
31-12-11-91	17	JAN 20/09
31-12-11-91	18	JAN 20/09
31-12-11-91	19	JAN 20/09
31-12-11-91	20	JAN 20/09
31-12-11-91	21	JAN 20/09
31-12-11-91A	0	JAN 20/09
31-12-11-91A	0A	JAN 20/09
31-12-11-91A	0B	JAN 20/09
31-12-11-91A	0C	JAN 20/09
31-12-11-91A	0D	JAN 20/09
31-12-11-91A	0E	JAN 20/09
31-12-11-91A	0F	JAN 20/09
31-12-11-91A	1	JAN 20/09
31-12-11-91A	2	JAN 20/09
31-12-11-91A	3	JAN 20/09

CH-SECT-UNIT-FIG	PAGE NO.	DATE
31-12-11-91A	4	JAN 20/09
31-12-11-91A	5	JAN 20/09
31-12-11-91A	6	JAN 20/09
31-12-11-91A	7	JAN 20/09
31-12-11-91A	8	JAN 20/09
31-12-11-91A	9	JAN 20/09
31-12-11-91A	10	JAN 20/09
31-12-11-91A	11	JAN 20/09
31-12-11-91A	12	JAN 20/09
31-12-11-91A	13	JAN 20/09
31-12-11-91A	14	JAN 20/09
31-12-11-91A	15	JAN 20/09
31-12-11-91A	16	JAN 20/09
31-12-11-91A	17	JAN 20/09
31-13-00	1	MAY 28/07
31-13-16- 1	0	SEP 28/07
31-13-16- 1	0A	MAY 28/07
31-13-16- 1	1	JAN 20/09
31-13-16- 1	2	JAN 20/09
31-13-16- 1	3	JAN 20/09
*31-13-16- 1	4	MAY 20/09
*31-13-16- 1	5	MAY 20/09
*31-13-16- 1	6	MAY 20/09
31-13-16- 2	0	MAY 28/07
31-13-16- 2	0A	MAY 28/07
31-13-16- 2	0B	MAY 28/07
31-13-16- 2	0C	MAY 28/07
31-13-16- 2	0D	MAY 28/07
31-13-16- 2	1	JAN 20/09
*31-13-16- 2	2	MAY 20/09
31-13-16- 2	3	JAN 20/09
31-13-16- 3	0	MAY 28/07
31-13-16- 3	0A	MAY 28/07
31-13-16- 3	0B	MAY 28/07
31-13-16- 3	0C	MAY 28/07
31-13-16- 3	0D	MAY 28/07
31-13-16- 3	0E	MAY 28/07
31-13-16- 3	0F	MAY 28/07
31-13-16- 3	1	JAN 20/09
31-13-16- 3	2	JAN 20/09
31-13-16- 3	3	JAN 20/09
31-13-16- 3	4	JAN 20/09
*31-13-16- 3	5	MAY 20/09
*31-13-16- 3	6	MAY 20/09
*31-13-16- 3	7	MAY 20/09
*31-13-16- 3	8	MAY 20/09
31-13-16- 3	9	JAN 20/09
31-13-16- 3	10	JAN 20/09
31-13-16- 3	11	JAN 20/09
31-14-00	1	MAY 28/07
31-14-16- 1	0	MAY 28/07

*** THE ASTERISK INDICATES PAGES CHANGED OR ADDED BY THE CURRENT REVISION**

BOEING PROPRIETARY - Copyright © - Unpublished Work - See title page for details.

CH-SECT-UNIT-FIG	PAGE NO.	DATE
31-14-16- 1	0A	MAY 28/07
31-14-16- 1	0B	MAY 28/07
31-14-16- 1	0C	MAY 28/07
31-14-16- 1	0D	MAY 28/07
31-14-16- 1	1	MAY 28/07
31-14-16- 1	2	SEP 28/07
31-14-16- 1	3	SEP 28/07
31-14-16- 1	4	SEP 28/07
31-14-16- 1	5	MAY 28/07
31-14-16- 1	6	MAY 28/07
31-14-16- 1	7	MAY 28/07
31-14-16- 1	8	MAY 28/07
31-14-16- 1	9	SEP 28/07
31-14-16- 8	0	JAN 20/09
31-14-16- 8	0A	JAN 20/09
31-14-16- 8	0B	JAN 20/09
31-14-16- 8	0C	JAN 20/09
31-14-16- 8	0D	JAN 20/09
31-14-16- 8	1	JAN 20/09
31-14-16- 8	2	JAN 20/09
31-14-16- 8	3	JAN 20/09
31-14-16- 8	4	JAN 20/09
31-14-16- 8	5	JAN 20/09
31-14-16- 8	6	JAN 20/09
31-14-16- 8	7	JAN 20/09
31-14-16- 8	8	JAN 20/09
31-14-16- 8	9	JAN 20/09
31-14-16-16	0	JAN 20/09
31-14-16-16	0A	JAN 20/09
31-14-16-16	0B	JAN 20/09
31-14-16-16	0C	JAN 20/09
31-14-16-16	1	JAN 20/09
31-14-16-16	2	JAN 20/09
31-14-16-16	3	JAN 20/09
31-14-16-16	4	JAN 20/09
31-14-16-16	5	JAN 20/09
31-14-16-16	6	JAN 20/09
31-14-16-16	7	JAN 20/09
31-14-16-16	8	JAN 20/09
31-14-16-16	9	JAN 20/09
31-14-16-26	0	MAY 28/07
31-14-16-26	0A	MAY 28/07
31-14-16-26	0B	MAY 28/07
31-14-16-26	0C	MAY 28/07
31-14-16-26	0D	MAY 28/07
31-14-16-26	0E	MAY 28/07
31-14-16-26	1	JAN 20/09
31-14-16-26	2	JAN 20/09
31-14-16-26	3	JAN 20/09
31-14-16-26	4	JAN 20/09
31-14-16-26	5	JAN 20/09

CH-SECT-UNIT-FIG	PAGE NO.	DATE
31-14-16-26	6	JAN 20/09
31-14-16-26	7	JAN 20/09
31-14-16-26	8	JAN 20/09
31-14-16-26	9	JAN 20/09
31-14-16-26	10	JAN 20/09
31-14-16-43	0	MAY 28/07
31-14-16-43	0A	MAY 28/07
31-14-16-43	0B	MAY 28/07
31-14-16-43	0C	MAY 28/07
31-14-16-43	0D	MAY 28/07
31-14-16-43	0E	MAY 28/07
31-14-16-43	0F	MAY 28/07
31-14-16-43	0G	MAY 28/07
31-14-16-43	1	JAN 20/09
31-14-16-43	2	JAN 20/09
31-14-16-43	3	JAN 20/09
31-14-16-43	4	JAN 20/09
31-14-16-43	5	JAN 20/09
*31-14-16-43	6	MAY 20/09
*31-14-16-43	7	MAY 20/09
31-14-16-43	8	JAN 20/09
31-14-16-43	9	JAN 20/09
31-14-16-43	10	JAN 20/09
31-14-16-43	11	JAN 20/09
*31-14-16-43	12	MAY 20/09
31-14-16-44	0	JAN 20/09
31-14-16-44	0A	JAN 20/09
31-14-16-44	0B	JAN 20/09
31-14-16-44	0C	JAN 20/09
31-14-16-44	0D	JAN 20/09
31-14-16-44	0E	JAN 20/09
31-14-16-44	1	JAN 20/09
31-14-16-44	2	JAN 20/09
31-14-16-44	3	JAN 20/09
31-14-16-44	4	JAN 20/09
31-14-16-44	5	JAN 20/09
31-14-16-44	6	JAN 20/09
31-14-16-44	7	JAN 20/09
31-14-16-44	8	JAN 20/09
31-14-16-44	9	JAN 20/09
31-14-16-44	10	JAN 20/09
*31-14-16-44	11	MAY 20/09
31-14-16-72	0	JAN 20/09
31-14-16-72	0A	JAN 20/09
31-14-16-72	0B	JAN 20/09
31-14-16-72	0C	JAN 20/09
31-14-16-72	1	JAN 20/09
31-14-16-72	2	JAN 20/09
31-14-16-72	3	JAN 20/09
31-14-16-72	4	JAN 20/09
31-14-16-72	5	JAN 20/09

* THE ASTERISK INDICATES PAGES CHANGED OR ADDED BY THE CURRENT REVISION

BOEING PROPRIETARY - Copyright © - Unpublished Work - See title page for details.

CH-SECT-UNIT-FIG	PAGE NO.	DATE
31-14-16-72	6	JAN 20/09
31-14-16-72	7	JAN 20/09
31-14-16-72	8	JAN 20/09
31-14-16-72	9	JAN 20/09
31-14-16-72	10	JAN 20/09
31-14-16-72	11	JAN 20/09
31-14-16-74	0	MAY 28/07
31-14-16-74	0A	MAY 28/07
31-14-16-74	0B	MAY 28/07
31-14-16-74	0C	MAY 28/07
31-14-16-74	0D	MAY 28/07
31-14-16-74	1	JAN 20/09
31-14-16-74	2	JAN 20/09
31-14-16-74	3	JAN 20/09
31-14-16-74	4	JAN 20/09
31-14-16-74	5	JAN 20/09
31-14-16-74	6	JAN 20/09
31-14-16-74	7	JAN 20/09
31-14-16-74	8	JAN 20/09
31-14-16-74	9	JAN 20/09
31-14-16-74	10	JAN 20/09
31-14-16-74	11	JAN 20/09
31-14-16-74	12	JAN 20/09
31-14-16-74	13	JAN 20/09
31-14-16-77	0	JAN 20/09
31-14-16-77	0A	JAN 20/09
31-14-16-77	0B	JAN 20/09
31-14-16-77	0C	JAN 20/09
31-14-16-77	0D	JAN 20/09
31-14-16-77	1	JAN 20/09
31-14-16-77	2	JAN 20/09
31-14-16-77	3	JAN 20/09
31-14-16-77	4	JAN 20/09
31-14-16-77	5	JAN 20/09
31-14-16-77	6	JAN 20/09
31-14-16-77	7	JAN 20/09
31-14-16-77	8	JAN 20/09
31-14-16-77	9	JAN 20/09
31-14-16-87	0	JAN 20/09
31-14-16-87	0A	JAN 20/09
31-14-16-87	0B	JAN 20/09
31-14-16-87	0C	JAN 20/09
31-14-16-87	0D	JAN 20/09
31-14-16-87	0E	JAN 20/09
31-14-16-87	1	JAN 20/09
31-14-16-87	2	JAN 20/09
31-14-16-87	3	JAN 20/09
31-14-16-87	4	JAN 20/09
31-14-16-87	5	JAN 20/09
31-14-16-87	6	JAN 20/09
31-14-16-87	7	JAN 20/09

CH-SECT-UNIT-FIG	PAGE NO.	DATE
31-14-16-87	8	JAN 20/09
31-14-16-87	9	JAN 20/09
31-17-00	1	JAN 20/09
31-17-11- 4	0	JAN 20/09
31-17-11- 4	0A	JAN 20/09
31-17-11- 4	0B	JAN 20/09
31-17-11- 4	0C	JAN 20/09
31-17-11- 4	1	JAN 20/09
31-17-11- 4	2	JAN 20/09
31-17-11- 4	3	JAN 20/09
31-17-11- 4	4	JAN 20/09
31-17-11- 4	5	JAN 20/09
31-17-11- 4	6	JAN 20/09
31-17-11- 5	0	JAN 20/09
31-17-11- 5	0A	JAN 20/09
31-17-11- 5	0B	JAN 20/09
31-17-11- 5	0C	JAN 20/09
31-17-11- 5	1	JAN 20/09
31-17-11- 5	2	JAN 20/09
31-17-11- 5	3	JAN 20/09
31-17-11- 5	4	JAN 20/09
31-17-11- 5	5	JAN 20/09
31-17-11- 5	6	JAN 20/09
31-17-11-50	0	JAN 20/09
31-17-11-50	1	JAN 20/09
31-17-11-50	2	JAN 20/09
31-25-00	1	MAY 28/07
31-25-01- 1	0	JAN 20/08
31-25-01- 1	1	JAN 20/09
*31-25-01- 1	2	MAY 20/09
*31-25-01- 1	3	MAY 20/09
*31-25-01- 1	4	MAY 20/09
*31-25-01- 1	5	MAY 20/09
31-25-01- 2	0	MAY 28/07
*31-25-01- 2	1	MAY 20/09
*31-25-01- 2	2	MAY 20/09
31-25-01- 3	0	MAY 28/07
*31-25-01- 3	1	MAY 20/09
*31-25-01- 3	2	MAY 20/09
*31-25-01- 3	3	MAY 20/09
*31-25-01- 3	4	MAY 20/09
*31-25-01- 3	5	MAY 20/09
*31-25-01- 3	6	MAY 20/09
*31-25-01- 3	7	MAY 20/09
31-25-01- 5	0	MAY 28/07
31-25-01- 5	1	JAN 20/09
31-25-01- 5	2	JAN 20/09
31-25-01- 6	0	JAN 20/09
*31-25-01- 6	1	MAY 20/09
*31-25-01- 6	2	MAY 20/09
*31-25-01- 6	3	MAY 20/09

* THE ASTERISK INDICATES PAGES CHANGED OR ADDED BY THE CURRENT REVISION

BOEING PROPRIETARY - Copyright © - Unpublished Work - See title page for details.

CH-SECT-UNIT-FIG	PAGE NO.	DATE
*31-25-01- 6	4	MAY 20/09
*31-25-01- 6	5	MAY 20/09
31-25-01-10	0	MAY 28/07
31-25-01-10	1	JAN 20/09
31-25-01-10	2	JAN 20/09
31-25-01-50	0	MAY 28/07
31-25-01-50	0A	MAY 28/07
*31-25-01-50	1	MAY 20/09
*31-25-01-50	2	MAY 20/09
*31-25-01-50	3	MAY 20/09
*31-25-01-50	4	MAY 20/09
31-25-51- 1	0	MAY 28/07
31-25-51- 1	1	JAN 20/09
31-25-51- 1	2	JAN 20/09
31-25-51- 1	3	JAN 20/09
31-25-51- 1	4	JAN 20/09
31-25-51- 1	5	JAN 20/09
31-25-51- 1	6	JAN 20/09
31-31-00	1	MAY 28/07
31-31-01- 1	0	MAY 28/07
31-31-01- 1	0A	MAY 28/07
31-31-01- 1	0B	MAY 28/07
31-31-01- 1	0C	MAY 28/07
31-31-01- 1	0D	MAY 28/07
31-31-01- 1	1	JAN 20/09
31-31-01- 1	2	JAN 20/09
31-31-01- 1	3	JAN 20/09
*31-31-01- 1	4	MAY 20/09
*31-31-01- 1	5	MAY 20/09
31-31-01- 1	6	JAN 20/09
31-31-01- 1	7	JAN 20/09
31-31-01- 1	8	JAN 20/09
31-31-01- 1	9	JAN 20/09
31-31-01- 1	10	JAN 20/09
31-31-01- 1	11	JAN 20/09
31-31-01- 1	12	JAN 20/09
*31-31-01- 1	13	MAY 20/09
31-31-01- 1	14	JAN 20/09
*31-31-01- 1	15	MAY 20/09
31-31-01- 1	16	JAN 20/09
31-31-01- 1	17	JAN 20/09
31-31-01- 1	18	JAN 20/09
31-31-01- 1	19	JAN 20/09
31-31-01- 1	20	JAN 20/09
*31-31-01- 1	21	MAY 20/09
*31-31-01- 1	22	MAY 20/09
*31-31-01- 1	23	MAY 20/09
*31-31-01- 1	24	MAY 20/09
31-31-02- 1	0	MAY 28/07
31-31-02- 1	0A	MAY 28/07
31-31-02- 1	1	JAN 20/09

CH-SECT-UNIT-FIG	PAGE NO.	DATE
31-31-02- 1	2	JAN 20/09
31-31-02- 1	3	JAN 20/09
31-31-02- 1	4	JAN 20/09
31-31-02- 1	5	JAN 20/09
31-31-02- 1	6	JAN 20/09
31-31-02- 1	7	JAN 20/09
31-31-02- 1	8	JAN 20/09
31-31-02- 1	9	JAN 20/09
31-31-02- 1	10	JAN 20/09
31-31-02- 1	11	JAN 20/09
31-31-02- 1	12	JAN 20/09
31-31-02- 1	13	JAN 20/09
31-31-02- 1	14	JAN 20/09
31-31-02- 1	15	JAN 20/09
31-31-02- 1	16	JAN 20/09
31-31-02- 1	17	JAN 20/09
31-31-03- 1	0	MAY 28/07
31-31-03- 1	1	JAN 20/09
*31-31-03- 1	2	MAY 20/09
*31-31-03- 1	3	MAY 20/09
*31-31-03- 1	4	MAY 20/09
*31-31-03- 1	5	MAY 20/09
*31-31-03- 1	6	MAY 20/09
31-31-03- 1A	0	JAN 20/09
31-31-03- 1A	0A	JAN 20/09
31-31-03- 1A	0B	MAY 28/07
31-31-03- 1A	0C	MAY 28/07
31-31-03- 1A	0D	MAY 28/07
31-31-03- 1A	0E	MAY 28/07
31-31-03- 1A	0F	MAY 28/07
31-31-03- 1A	0G	MAY 28/07
31-31-03- 1A	0H	MAY 28/07
31-31-03- 1A	0I	MAY 28/07
31-31-03- 1A	0J	MAY 28/07
*31-31-03- 1A	1	MAY 20/09
31-31-03- 1A	2	JAN 20/09
*31-31-03- 1A	3	MAY 20/09
*31-31-03- 1A	4	MAY 20/09
*31-31-03- 1A	5	MAY 20/09
31-31-03- 1B	0	MAY 28/07
*31-31-03- 1B	1	MAY 20/09
*31-31-03- 1B	2	MAY 20/09
*31-31-03- 1B	3	MAY 20/09
31-31-03- 8	0	JAN 20/09
*31-31-03- 8	1	MAY 20/09
31-31-03- 8	2	JAN 20/09
*31-31-03- 8	3	MAY 20/09
*31-31-03- 8	4	MAY 20/09
*31-31-03- 8	5	MAY 20/09
31-31-04- 1	0	MAY 28/07
31-31-04- 1	1	JAN 20/09

* THE ASTERISK INDICATES PAGES CHANGED OR ADDED BY THE CURRENT REVISION

BOEING PROPRIETARY - Copyright © - Unpublished Work - See title page for details.

CH-SECT-UNIT-FIG	PAGE NO.	DATE
31-31-04- 1	2	JAN 20/09
31-31-04- 1	3	JAN 20/09
31-31-04- 1	4	JAN 20/09
31-31-04- 1	5	JAN 20/09
31-31-04- 1	6	JAN 20/09
31-31-06- 1	0	MAY 28/07
*31-31-06- 1	1	MAY 20/09
31-31-06- 2	0	JAN 20/09
*31-31-06- 2	1	MAY 20/09
31-31-08- 1	0	MAY 28/07
31-31-08- 1	0A	MAY 28/07
31-31-08- 1	0B	MAY 28/07
31-31-08- 1	1	JAN 20/09
31-31-08- 1	2	JAN 20/09
31-31-08- 1	3	JAN 20/09
31-31-08- 1	4	JAN 20/09
31-31-08- 1	5	JAN 20/09
31-31-08- 1	6	JAN 20/09
31-31-09- 1	0	MAY 28/07
31-31-09- 1	0A	MAY 28/07
31-31-09- 1	1	JAN 20/09
31-31-09- 1	2	JAN 20/09
31-31-09- 1	3	JAN 20/09
31-31-09- 1	4	JAN 20/09
31-31-09- 1	5	JAN 20/09
31-31-09- 1	6	JAN 20/09
31-31-09- 1	7	JAN 20/09
31-31-09- 1A	0	JAN 20/09
31-31-09- 1A	0A	JAN 20/09
31-31-09- 1A	1	JAN 20/09
31-31-09- 1A	2	JAN 20/09
31-31-09- 1A	3	JAN 20/09
31-31-09- 1B	0	JAN 20/09
31-31-09- 1B	0A	JAN 20/09
31-31-09- 1B	1	JAN 20/09
31-31-09- 1B	2	JAN 20/09
31-31-09- 1B	3	JAN 20/09
31-31-09- 1B	4	JAN 20/09
31-31-13- 1	0	MAY 28/07
*31-31-13- 1	1	MAY 20/09
31-31-13- 1	2	JAN 20/09
*31-31-13- 1	3	MAY 20/09
*31-31-13- 1	4	MAY 20/09
31-31-13- 2	0	MAY 28/07
*31-31-13- 2	1	MAY 20/09
31-31-13- 2	2	JAN 20/09
*31-31-13- 2	3	MAY 20/09
*31-31-13- 2	4	MAY 20/09
31-31-51- 1	0	MAY 28/07
31-31-51- 1	1	JAN 20/09
*31-31-51- 1	2	MAY 20/09

CH-SECT-UNIT-FIG	PAGE NO.	DATE
31-31-51- 1	3	JAN 20/09
31-31-71- 2	0	SEP 20/08
31-31-71- 2	1	JAN 20/09
31-31-71- 2	2	JAN 20/09
31-31-71- 2	3	JAN 20/09
31-31-71- 2	4	JAN 20/09
31-31-71- 2B	0	MAY 28/07
31-31-71- 2B	1	JAN 20/09
31-31-71- 2B	2	JAN 20/09
31-31-71- 2B	3	JAN 20/09
31-31-71- 2B	4	JAN 20/09
31-31-71- 2D	0	JAN 20/09
31-31-71- 2D	1	JAN 20/09
31-31-71- 2D	2	JAN 20/09
31-31-71- 2D	3	JAN 20/09
31-31-71- 2D	4	JAN 20/09
31-31-71- 2D	5	JAN 20/09
31-31-71- 2D	6	JAN 20/09
31-31-71- 2D	7	JAN 20/09
31-35-00	1	MAY 28/07
31-35-01- 2	0	MAY 28/07
31-35-01- 2	0A	MAY 28/07
31-35-01- 2	1	JAN 20/09
31-35-01- 2	2	JAN 20/09
31-35-01- 2	3	JAN 20/09
31-35-01- 8	0	JAN 20/09
31-35-01- 8	1	JAN 20/09
31-35-11- 1	0	MAY 28/07
31-35-11- 1	1	JAN 20/09
31-35-11- 1	2	JAN 20/09
31-35-51- 1	0	JAN 20/09
31-35-51- 1	1	JAN 20/09
31-41-00	1	MAY 28/07
31-41-00- 1	0	JAN 20/09
31-41-00- 1	1	JAN 20/09
31-41-00- 1A	0	JAN 20/09
31-41-00- 1A	1	JAN 20/09
31-41-00- 1B	0	JAN 20/09
31-41-00- 1B	1	JAN 20/09
31-41-01- 1	0	MAY 28/07
31-41-01- 1	1	JAN 20/09
31-41-01- 1	2	SEP 20/08
31-41-01- 1	3	JAN 20/09
31-41-02- 1	0	MAY 28/07
31-41-02- 1	0A	MAY 28/07
31-41-02- 1	0B	MAY 28/07
31-41-02- 1	0C	MAY 28/07
31-41-02- 1	0D	MAY 28/07
31-41-02- 1	1	JAN 20/09
31-41-02- 1	2	JAN 20/09
*31-41-02- 1	3	MAY 20/09

* THE ASTERISK INDICATES PAGES CHANGED OR ADDED BY THE CURRENT REVISION

BOEING PROPRIETARY - Copyright © - Unpublished Work - See title page for details.

CH-SECT-UNIT-FIG	PAGE NO.	DATE
*31-41-02- 1	4	MAY 20/09
*31-41-02- 1	5	MAY 20/09
*31-41-02- 1	6	MAY 20/09
*31-41-02- 1	7	MAY 20/09
*31-41-02- 1	8	MAY 20/09
*31-41-02- 1	9	MAY 20/09
*31-41-02- 1	10	MAY 20/09
*31-41-02- 1	11	MAY 20/09
31-41-02- 1B	0	MAY 28/07
31-41-02- 1B	0A	MAY 28/07
31-41-02- 1B	0B	MAY 28/07
31-41-02- 1B	1	JAN 20/09
31-41-02- 1B	2	JAN 20/09
31-41-02- 1B	3	JAN 20/09
31-41-02- 2	0	JAN 20/09
31-41-02- 2	0A	JAN 20/09
31-41-02- 2	0B	JAN 20/09
31-41-02- 2	0C	JAN 20/09
31-41-02- 2	1	JAN 20/09
31-41-02- 2	2	JAN 20/09
31-41-02- 2	3	JAN 20/09
31-41-02- 8	0	JAN 20/09
31-41-02- 8	0A	JAN 20/09
31-41-02- 8	0B	JAN 20/09
31-41-02- 8	0C	JAN 20/09
31-41-02- 8	1	JAN 20/09
31-41-02- 8	2	JAN 20/09
31-41-02- 8	3	JAN 20/09
31-41-03- 1	0	MAY 28/07
31-41-03- 1	1	JAN 20/09
31-41-03- 1	2	JAN 20/09
31-41-03- 1	3	JAN 20/09
31-41-03- 1	4	JAN 20/09
31-41-03- 2	0	MAY 28/07
31-41-03- 2	0A	MAY 28/07
31-41-03- 2	1	JAN 20/09
31-41-03- 2	2	JAN 20/09
31-41-03- 2	3	JAN 20/09
31-41-03- 2	4	JAN 20/09
31-41-03- 2	5	JAN 20/09
31-41-04- 1	0	MAY 28/07
31-41-04- 1	1	JAN 20/09
31-41-04- 1	2	JAN 20/09
31-41-04- 1	3	JAN 20/09
31-41-04- 1B	0	MAY 28/07
31-41-04- 1B	1	JAN 20/09
31-41-04- 1B	2	JAN 20/09
31-41-04- 8	0	JAN 20/09
31-41-04- 8	1	JAN 20/09
31-41-04- 8	2	JAN 20/09
31-41-51- 1	0	JAN 20/09

CH-SECT-UNIT-FIG	PAGE NO.	DATE
*31-41-51- 1	1	MAY 20/09
*31-41-51- 1	2	MAY 20/09
31-41-52- 1	0	MAY 28/07
31-41-52- 1	1	JAN 20/09
31-41-52- 2	0	MAY 28/07
31-41-52- 2	1	JAN 20/09
31-41-52- 2	2	JAN 20/09
31-41-52- 2	3	JAN 20/09
31-41-52- 2	4	JAN 20/09
31-41-53- 1	0	MAY 28/07
31-41-53- 1	1	JAN 20/09
31-41-53- 1	2	JAN 20/09
31-41-53- 1	3	JAN 20/09
31-41-53- 1	4	JAN 20/09
31-41-53- 1	5	JAN 20/09
31-41-54- 1	0	MAY 28/07
31-41-54- 1	1	JAN 20/09
31-51-00	1	MAY 28/07
31-51-01- 1	0	MAY 28/07
31-51-01- 1	0A	MAY 28/07
31-51-01- 1	0B	MAY 28/07
31-51-01- 1	0C	MAY 28/07
31-51-01- 1	0D	MAY 28/07
31-51-01- 1	1	JAN 20/09
31-51-01- 1	2	JAN 20/09
31-51-01- 1	3	JAN 20/09
*31-51-01- 1	4	MAY 20/09
31-51-01- 1	5	JAN 20/09
31-51-01- 1	6	JAN 20/09
31-51-01- 1	7	JAN 20/09
31-51-01- 1	8	JAN 20/09
31-51-01- 1	9	JAN 20/09
31-51-01- 1	10	JAN 20/09
31-51-01- 1	11	JAN 20/09
31-51-01- 1	12	JAN 20/09
31-51-01- 1	13	JAN 20/09
*31-51-01- 1	14	MAY 20/09
*31-51-01- 1	15	MAY 20/09
*31-51-01- 1	16	MAY 20/09
*31-51-01- 1	17	MAY 20/09
*31-51-01- 1	18	MAY 20/09
*31-51-01- 1	19	MAY 20/09
*31-51-01- 1	20	MAY 20/09
*31-51-01- 1	21	MAY 20/09
*31-51-01- 1	22	MAY 20/09
*31-51-01- 1	23	MAY 20/09
31-51-01- 1A	0	JAN 20/09
31-51-01- 1A	0A	JAN 20/09
31-51-01- 1A	0B	JAN 20/09
31-51-01- 1A	0C	JAN 20/09
*31-51-01- 1A	1	MAY 20/09

*** THE ASTERISK INDICATES PAGES CHANGED OR ADDED BY THE CURRENT REVISION**

BOEING PROPRIETARY - Copyright © - Unpublished Work - See title page for details.

CH-SECT-UNIT-FIG	PAGE NO.	DATE
*31-51-01- 1A	2	MAY 20/09
*31-51-01- 1A	3	MAY 20/09
*31-51-01- 1A	4	MAY 20/09
*31-51-01- 1A	5	MAY 20/09
*31-51-01- 1A	6	MAY 20/09
*31-51-01- 1A	7	MAY 20/09
*31-51-01- 1A	8	MAY 20/09
*31-51-01- 1A	9	MAY 20/09
*31-51-01- 1A	10	MAY 20/09
*31-51-01- 1A	11	MAY 20/09
*31-51-01- 1A	12	MAY 20/09
*31-51-01- 1A	13	MAY 20/09
31-51-01- 1B	0	MAY 28/07
31-51-01- 1B	0A	MAY 28/07
31-51-01- 1B	0B	MAY 28/07
31-51-01- 1B	0C	MAY 28/07
31-51-01- 1B	1	JAN 20/09
31-51-01- 1B	2	JAN 20/09
31-51-01- 1B	3	JAN 20/09
31-51-01- 1B	4	JAN 20/09
31-51-01- 1B	5	JAN 20/09
31-51-01- 1B	6	JAN 20/09
31-51-01- 1B	7	JAN 20/09
*31-51-01- 1B	8	MAY 20/09
*31-51-01- 1B	9	MAY 20/09
*31-51-01- 1B	10	MAY 20/09
*31-51-01- 1B	11	MAY 20/09
*31-51-01- 1B	12	MAY 20/09
*31-51-01- 1B	13	MAY 20/09
*31-51-01- 1B	14	MAY 20/09
*31-51-01- 1B	15	MAY 20/09
31-51-11- 5	0	MAY 28/07
31-51-11- 5	1	JAN 20/09
31-51-11- 5	2	JAN 20/09
31-51-11- 5	3	JAN 20/09
31-51-11- 5	4	JAN 20/09
31-51-11- 5	5	JAN 20/09
31-51-11- 5	6	JAN 20/09
31-51-11- 5	7	JAN 20/09
31-51-51- 1	0	MAY 28/07
31-51-51- 1	1	JAN 20/09
31-51-51- 1	2	JAN 20/09
31-51-51- 1	3	JAN 20/09
31-51-51- 1	4	JAN 20/09
31-51-51- 1	5	JAN 20/09
31-51-51- 3	0	MAY 28/07
31-51-51- 3	0A	MAY 28/07
31-51-51- 3	0B	MAY 28/07
31-51-51- 3	1	JAN 20/09
31-51-51- 3	2	JAN 20/09
31-51-51- 3	3	JAN 20/09

CH-SECT-UNIT-FIG	PAGE NO.	DATE
31-51-51- 3	4	JAN 20/09
31-51-51- 3	5	JAN 20/09
31-51-51- 3	6	JAN 20/09
31-51-51- 3A	0	MAY 28/07
31-51-51- 3A	0A	MAY 28/07
31-51-51- 3A	0B	MAY 28/07
31-51-51- 3A	0C	MAY 28/07
31-51-51- 3A	0D	MAY 28/07
31-51-51- 3A	0E	MAY 28/07
31-51-51- 3A	1	JAN 20/09
31-51-51- 3A	2	JAN 20/09
31-51-51- 3A	3	JAN 20/09
31-51-51- 3A	4	JAN 20/09
31-51-51- 3A	5	JAN 20/09
31-51-51- 3A	6	JAN 20/09
31-51-51- 3A	7	JAN 20/09
31-51-51- 3A	8	JAN 20/09
31-51-51- 3A	9	JAN 20/09
31-51-51- 3A	10	JAN 20/09
31-51-51- 3A	11	JAN 20/09
31-51-51- 3A	12	JAN 20/09
31-51-51- 3A	13	JAN 20/09
31-51-51- 3A	14	JAN 20/09
31-51-51- 3A	15	JAN 20/09
31-51-51- 3A	16	JAN 20/09
31-51-51- 8	0	JAN 20/09
31-51-51- 8	0A	JAN 20/09
31-51-51- 8	0B	JAN 20/09
31-51-51- 8	0C	JAN 20/09
31-51-51- 8	1	JAN 20/09
31-51-51- 8	2	JAN 20/09
31-51-51- 8	3	JAN 20/09
31-51-51- 8	4	JAN 20/09
31-51-51- 8	5	JAN 20/09
31-51-51- 8	6	JAN 20/09
31-51-51- 8	7	JAN 20/09
31-51-51- 8	8	JAN 20/09
*31-51-51- 8	9	MAY 20/09
*31-51-51- 8	10	MAY 20/09
*31-51-51- 8	11	MAY 20/09
*31-51-51- 8	12	MAY 20/09
*31-51-51- 8	13	MAY 20/09
*31-51-51- 8	14	MAY 20/09
*31-51-51- 8	15	MAY 20/09
*31-51-51- 8	16	MAY 20/09
*31-51-51- 8	17	MAY 20/09
31-51-52- 1	0	MAY 28/07
31-51-52- 1	1	JAN 20/09
31-51-52- 1	2	JAN 20/09
31-51-52- 1	3	JAN 20/09
31-51-52- 2	0	MAY 28/07

*** THE ASTERISK INDICATES PAGES CHANGED OR ADDED BY THE CURRENT REVISION**

BOEING PROPRIETARY - Copyright © - Unpublished Work - See title page for details.

CH-SECT-UNIT-FIG	PAGE NO.	DATE
31-51-52- 2	1	JAN 20/09
31-51-52- 2	2	JAN 20/09
31-51-52- 2	3	JAN 20/09
31-51-52- 2	4	JAN 20/09
31-51-52- 2	5	JAN 20/09
31-51-52- 2	6	JAN 20/09
31-51-52- 2	7	JAN 20/09
31-51-61- 1	0	MAY 28/07
31-51-61- 1	1	JAN 20/09
31-51-61- 2	0	MAY 28/07
31-51-61- 2	0A	MAY 28/07
31-51-61- 2	0B	MAY 28/07
31-51-61- 2	0C	MAY 28/07
31-51-61- 2	0D	MAY 28/07
31-51-61- 2	0E	MAY 28/07
31-51-61- 2	1	JAN 20/09
31-51-61- 2	2	JAN 20/09
31-51-61- 2	3	JAN 20/09
31-51-61- 2	4	JAN 20/09
31-51-61- 2	5	JAN 20/09
31-51-61- 2	6	JAN 20/09
31-51-61- 2	7	JAN 20/09
31-51-61- 2	8	JAN 20/09
31-51-61- 2	9	JAN 20/09
31-51-61- 2	10	JAN 20/09
31-51-61- 2	11	JAN 20/09
31-51-61- 2	12	JAN 20/09
31-51-61- 2	13	JAN 20/09
31-51-61- 2	14	JAN 20/09
31-51-61- 2	15	JAN 20/09

CH-SECT-UNIT-FIG	PAGE NO.	DATE

* THE ASTERISK INDICATES PAGES CHANGED OR ADDED BY THE CURRENT REVISION

BOEING PROPRIETARY - Copyright © - Unpublished Work - See title page for details.

CHAPTER 31 — INDICATING AND RECORDING SYSTEMS

TABLE OF CONTENTS

SUBJECT	CC-SS-UU	FIGURE	EFFECT
ELECTRICAL / ELECTRONIC PANELS	31-01-00		
EQUIPMENT ASSY-E6 RELAY PNL AFT EQPT CTR (ELECTRICAL/ELECTRONIC PANELS ONLY)	31-01-86	04	108120
EQUIPMENT ASSY-E6 RELAY PNL AFT EQPT CTR (ELECTRICAL/ELECTRONIC PANELS ONLY)	31-01-86	05	103106
EQUIPMENT INSTL-E6 AFT EQPT CTR RELAY PANEL	31-01-86	02	101102 504903
PACKAGE ASSY-OPTION P31 AND P32 GEN PWR PNL (INDICATING/RECORDING ONLY)	31-01-31	03	101102 108120 504903
PACKAGE ASSY-OPTION P37 MISC RELAY (EQUIPMENT/ FURNISHINGS ONLY)	31-01-37	05	101102 504903
PANEL AND EQUIPMENT INSTL RELAY PANEL/ EQPT CTR AFT	31-01-86	03	103106
PANEL ASSY AND CIRCUIT BREAKER INSTL-PWR DISTR P6	31-01-06	10	002004 006999
PANEL ASSY-P31 PWR (INDICATING/RECORDING ONLY)	31-01-31	05	103106
PANEL ASSY-P32 PWR PNL (ELECTRICAL/ELECTRONIC PANELS ONLY)	31-01-32	10	108120
PANEL ASSY-P34 APU/EXT PWR (PANELS ONLY)	31-01-34	03	103106 108120
PANEL ASSY-P36 MISC RELAY (INDICATING/RECORDING SYSTEMS ONLY)	31-01-36	07	002004 006100 107107 121503 904999
PANEL ASSY-P37 RELAY R (RIGHT MISCELLANEOUS ELECTRICAL EQUIPMENT PANEL P37 ONLY)	31-01-37	01	002004 006100 107107 121503 904999
PANEL INSTL AND ASSY-P34 PWR APU/EXTERNAL	31-01-34	01	101102 504903
PANEL INSTL-E6 AFT EQPT CTR RELAY	31-01-86	01A	101102 108120 504903
PANEL INSTL-LEFT MISC RELAY P36	31-01-36	05	101102 504903

BOEING PROPRIETARY - Copyright © - Unpublished Work - See title page for details.

CHAPTER 31 — INDICATING AND RECORDING SYSTEMS

TABLE OF CONTENTS

SUBJECT	CC-SS-UU	FIGURE	EFFECT
PANEL INSTL-P31, P32 AND P34 PWR (APU/EXTERNAL POWER PANELS ONLY)	31-01-34	02	002004 006100 107107 121503 904999
PANEL INSTL-P31, P32 AND P34 PWR (LEFT GENERATOR POWER PANELS ONLY)	31-01-31	02	002004 006100 107107 121503 904999
PANEL INSTL-P31, P32 AND P34 PWR (RIGHT GENERATOR POWER PANELS ONLY)	31-01-32	02	002004 006100 107107 121503 904999
PANEL INSTL-P36 AND P37 MISC E/E EQPT (LEFT MISCELLANEOUS ELECTRICAL EQUIPMENT PANEL P36 ONLY)	31-01-36	01B	002004 006999
PANEL INSTL-P36 AND P37 MISC E/E EQPT (RIGHT MISCELLANEOUS ELECTRICAL EQUIPMENT PANEL P37 ONLY)	31-01-37	01B	002004 006999
PANEL INSTL-P36 L MISC RELAY (INDICATING/ RECORDIMG SYSTEMS ONLY)	31-01-36	01	103106 108120
PANEL INSTL-P37 R MISC RELAY (E/E PANELS ONLY)	31-01-37	10	103106 108120
PANEL INSTL-P6 PWR DISTR (PANEL ONLY)	31-01-06	02	103106 108120
PANEL INSTL-P65 MISC ELECTRONICS EQPT CTR	31-01-65	01A	101106 108120 504903
PANEL INSTL-P65 MISC ELECTRONICS EQPT CTR	31-01-65	03	002100 107107 121503 904999
PANEL INSTL-P65 MISC RELAY (INDICATING/RECORDING SYSTEMS ONLY)	31-01-65	01	103106 108120
PANEL INSTL-P70 MISC RELAY	31-01-70	01	101102 504903
PANEL INSTL-P70 MISC RELAY (INDICATING/RECORDING SYSTEMS ONLY)	31-01-70	05	103106 108120

BOEING PROPRIETARY - Copyright © - Unpublished Work - See title page for details.

CHAPTER 31 — INDICATING AND RECORDING SYSTEMS

TABLE OF CONTENTS

SUBJECT	CC-SS-UU	FIGURE	EFFECT
PANEL INSTL-RIGHT MISC RELAY P37	31-01-37	02	101102 504903
SHIELD INSTL-P33 MISC ELEC EQPT	31-01-33	01	101102 108120 504903
SHIELD INSTL-P33 MISC ELEC EQPT	31-01-33	03	002004 006100 107107 121503 904999
SHIELD INSTL-P33 MISC ELEC EQPT	31-01-33	04	101106 108120 504903
SHIELD INSTL-P33 MISC ELEC EQPT (INDICATING/ RECORDING SYSTEMS ONLY)	31-01-33	10	103106
SHIELD INSTL-P71 HYDR GEN CONT (GENERATOR POWER PANEL ONLY)	31-01-71	02	101106 108120
SHIELD, EQUIPMENT AND KIT INSTL P-71 HYDR GEN CONT	31-01-71	01	002004 006503 904949 952999
WIRE BUNDLE ASSY-P34	31-01-34	03A	103106 108120

BOEING PROPRIETARY - Copyright © - Unpublished Work - See title page for details.

CHAPTER 31 — INDICATING AND RECORDING SYSTEMS

TABLE OF CONTENTS

SUBJECT	CC-SS-UU	FIGURE	EFFECT
PILOTS MAIN PANELS	31-11-00		
PANEL AND LEVEL INSTL-P1-1 AND P1-3 (CAPTAIN'S INSTRUMENT PANEL ONLY)	31-11-11	01	101106 108120 504903
PANEL INSTL-CAPT AND FIRST OFFICER FWD P55 (INDICATING AND RECORDING ONLY)	31-11-16	02	002004 006100 107107 121503 904999
PANEL INSTL-CAPT P1-1 FWD (INDICATING AND RECORDING ONLY)	31-11-11	22	121503 904949
PANEL INSTL-CONT (CENTER INSTRUMENT PANEL AND LIGHTSHIELD ONLY)	31-11-16	01	101106 108120 504903
PANEL INSTL-FIRST OFFICERS P3-1 FWD (INDICATING AND RECORDING ONLY)	31-11-26	27	121503 904949
PANEL INSTL-FIRST OFFICERS P3-1 FWD (INDICATING AND RECORDING ONLY)	31-11-26	29	002004 006010 107107 950999
PANEL INSTL-FIRST OFFICERS P3-3 (INDICATING AND RECORDING ONLY) FWD	31-11-26	32	121503 904949
PANEL INSTL-FWD P9 ELECTRONICS (INDICATING/RECORDING ONLY)	31-11-31	01	002004 006100 107107 121503 904999
PANEL INSTL-P1-1 (CAPTAIN'S INSTRUMENT PANEL ONLY)	31-11-11	02	101102 108120
PANEL INSTL-P1-1 (CAPTAIN'S INSTRUMENT PANEL ONLY)	31-11-11	21	002004 006010 107107 950999
PANEL INSTL-P1-1 (CAPTAIN'S INSTRUMENT PANEL ONLY)	31-11-11	28	011100
PANEL INSTL-P1-1 (INDICATING/RECORDING ONLY)	31-11-11	03	504903
PANEL INSTL-P1-1 AND P1-3 (CAPTAIN'S INSTRUMENT PANEL ONLY)	31-11-11	19	103106

BOEING PROPRIETARY - Copyright © - Unpublished Work - See title page for details.

CHAPTER 31 — INDICATING AND RECORDING SYSTEMS

TABLE OF CONTENTS

SUBJECT	CC-SS-UU	FIGURE	EFFECT
PANEL INSTL-P1-3 (CAPTAIN'S INSTRUMENT PANEL ONLY)	31-11-11	10	101102 108120 504903
PANEL INSTL-P1-3 (CAPTAIN'S INSTRUMENT PANEL ONLY)	31-11-11	35	121503 904949
PANEL INSTL-P1-3 (CAPTAIN'S INSTRUMENT PANEL ONLY)	31-11-11	36	002004 006010 107107 950999
PANEL INSTL-P1-3 (CAPTAIN'S INSTRUMENT PANEL ONLY)	31-11-11	39	011100
PANEL INSTL-P10 ELECTRONICS (PILOTS' CONTROL STAND ONLY)	31-11-41	02	101106 108120 504903
PANEL INSTL-P10 STAND QUADRANT (INDICATING/RECORDING ONLY)	31-11-41	01	002004 006100 107107 121503 904999
PANEL INSTL-P3-1 (FIRST OFFICER'S INSTRUMENT PANEL ONLY)	31-11-26	02	101102 108120
PANEL INSTL-P3-1 (FIRST OFFICER'S INSTRUMENT PANEL ONLY)	31-11-26	03	504903
PANEL INSTL-P3-1 (FIRST OFFICER'S INSTRUMENT PANEL ONLY)	31-11-26	30	011100
PANEL INSTL-P3-1 AND P3-3 (FIRST OFFICER'S INSTRUMENT PANEL ONLY)	31-11-26	01	101106 108120 504903
PANEL INSTL-P3-1 AND P3-3 (FIRST OFFICER'S INSTRUMENT PANEL ONLY)	31-11-26	38	103106
PANEL INSTL-P3-3 (FIRST OFFICER'S INSTRUMENT PANEL ONLY)	31-11-26	10	101102 108120 504903
PANEL INSTL-P3-3 (FIRST OFFICER'S INSTRUMENT PANEL ONLY)	31-11-26	36	002004 006010 107107 121503 950999
PANEL INSTL-P3-3 (FIRST OFFICER'S INSTRUMENT PANEL ONLY)	31-11-26	37	011100

BOEING PROPRIETARY - Copyright © - Unpublished Work - See title page for details.

CHAPTER 31 — INDICATING AND RECORDING SYSTEMS

TABLE OF CONTENTS

SUBJECT	CC-SS-UU	FIGURE	EFFECT
PANEL INSTL-P8 ELECTRONICS (CONTROL STAND AFT ELECTRONIC PANEL ONLY)	31-11-36	02	121503 904949
PANEL INSTL-P8 ELECTRONICS (CONTROL STAND AFT ELECTRONIC PANEL ONLY)	31-11-36	03	107107
PANEL INSTL-P8 ELECTRONICS (CONTROL STAND AFT ELECTRONIC PANEL ONLY)	31-11-36	25	952999
PANEL INSTL-P8 ELECTRONICS (CONTROL STAND AFT ELECTRONIC PANEL ONLY)	31-11-36	26	002004 006100
PANEL INSTL-P8 ELECTRONICS (CONTROL STAND AFT ELECTRONIC PANEL ONLY)	31-11-36	30	950951
PANEL INSTL-P8 ELECTRONICS (CONTROL STAND AFT ELECTRONIC PANEL ONLY)	31-11-36	55	108120
PANEL INSTL-P8 ELECTRONICS (CONTROL STAND AFT ELECTRONIC PANEL ONLY)	31-11-36	67	504903
PANEL INSTL-P8 ELECTRONICS (CONTROL STAND AFT ELECTRONIC PANEL ONLY)	31-11-36	70	101102
PANEL INSTL-P8 ELECTRONICS (CONTROL STAND AFT ELECTRONIC PANEL ONLY)	31-11-36	78	103106
PANEL INSTL-P9 ELECTRONICS (CONTROL STAND FORWARD ELECTRONIC PANEL ONLY)	31-11-31	02	101106 108120 504903
OVERHEAD PANELS	31-12-00		
PANEL INSTL-P5 OVHD (INDICATING/RECORDING SYSTEM ONLY)	31-12-11	30A	011100
PANEL INSTL-P5 OVHD (INDICATING/RECORDING SYSTEMS ONLY)	31-12-11	01	002004 006010 950999
PANEL INSTL-P5 OVHD (INDICATING/RECORDING SYSTEMS ONLY)	31-12-11	01A	002004 006010 950999
PANEL INSTL-P5 OVHD (INDICATING/RECORDING SYSTEMS ONLY)	31-12-11	05	107107
PANEL INSTL-P5 OVHD (INDICATING/RECORDING SYSTEMS ONLY)	31-12-11	05A	107107
PANEL INSTL-P5 OVHD (INDICATING/RECORDING SYSTEMS ONLY)	31-12-11	07	121503 904949
PANEL INSTL-P5 OVHD (INDICATING/RECORDING SYSTEMS ONLY)	31-12-11	07A	121503 904949
PANEL INSTL-P5 OVHD (INDICATING/RECORDING SYSTEMS ONLY)	31-12-11	30	011100

BOEING PROPRIETARY - Copyright © - Unpublished Work - See title page for details.

CHAPTER 31 — INDICATING AND RECORDING SYSTEMS

TABLE OF CONTENTS

SUBJECT	CC-SS-UU	FIGURE	EFFECT
PANEL INSTL-P5 OVHD (INDICATING/RECORDING SYSTEMS ONLY)	31-12-11	54	101102
PANEL INSTL-P5 OVHD (INDICATING/RECORDING SYSTEMS ONLY)	31-12-11	54A	101102
PANEL INSTL-P5 OVHD (INDICATING/RECORDING SYSTEMS ONLY)	31-12-11	65	108120
PANEL INSTL-P5 OVHD (INDICATING/RECORDING SYSTEMS ONLY)	31-12-11	65A	108120
PANEL INSTL-P5 OVHD (INDICATING/RECORDING SYSTEMS ONLY)	31-12-11	79	504903
PANEL INSTL-P5 OVHD (INDICATING/RECORDING SYSTEMS ONLY)	31-12-11	79A	504903
PANEL INSTL-P5 OVHD (INDICATING/RECORDING SYSTEMS ONLY)	31-12-11	84	106106
PANEL INSTL-P5 OVHD (INDICATING/RECORDING SYSTEMS ONLY)	31-12-11	84A	106106
PANEL INSTL-P5 OVHD (INDICATING/RECORDING SYSTEMS ONLY)	31-12-11	91	103105
PANEL INSTL-P5 OVHD (INDICATING/RECORDING SYSTEMS ONLY)	31-12-11	91A	103105
PILOTS AUXILIARY PANEL	31-13-00		
PANEL INSTL-AUX,P13,P14,P17 AUDIO SELECT,PTT,HTR CONT PTR,DISKETTE(INDICATING/ RECORDING SYS ONLY)	31-13-16	03	101106 108120 504903
PANEL INSTL-P13, P14 AND P17 AUX (INDICATING/RECORDING ONLY)	31-13-16	01	002004 006010 107107 121503 904999
PANEL INSTL-P13, P14 AND P17 AUX (INDICATING/RECORDING ONLY)	31-13-16	02	002004 006100 107107 121503 904999
PILOTS RIGHTSIDE INSTRUMENT PANEL	31-14-00		
PANEL INSTL-P61 R SIDEWALL (PILOTS' RIGHT SIDE INSTRUMENT PANEL ONLY)	31-14-16	01	101101
PANEL INSTL-P61 R SIDEWALL (PILOTS' RIGHT SIDE INSTRUMENT PANEL ONLY)	31-14-16	08	108120

BOEING PROPRIETARY - Copyright © - Unpublished Work - See title page for details.

CHAPTER 31 — INDICATING AND RECORDING SYSTEMS

TABLE OF CONTENTS

SUBJECT	CC-SS-UU	FIGURE	EFFECT
PANEL INSTL-P61 R SIDEWALL (PILOTS' RIGHT SIDE INSTRUMENT PANEL ONLY)	31-14-16	16	504903
PANEL INSTL-P61 R SIDEWALL (PILOTS' RIGHT SIDE INSTRUMENT PANEL ONLY)	31-14-16	26	102102
PANEL INSTL-P61 R SIDEWALL (PILOTS' RIGHT SIDE INSTRUMENT PANEL ONLY)	31-14-16	43	121503 904949
PANEL INSTL-P61 R SIDEWALL (PILOTS' RIGHT SIDE INSTRUMENT PANEL ONLY)	31-14-16	74	002004 006100
PANEL INSTL-P61 R SIDEWALL (PILOTS' RIGHT SIDE INSTRUMENT PANEL ONLY)	31-14-16	87	103106
PANEL INSTL-P61 RIGHT SIDE (PILOTS' RIGHT SIDE INSTRUMENT PANEL ONLY)	31-14-16	44	107107
PANEL INSTL-P61 RIGHT SIDE (PILOTS' RIGHT SIDE INSTRUMENT PANEL ONLY)	31-14-16	72	952999
PANEL INSTL-P61 RIGHT SIDE (PILOTS' RIGHT SIDE INSTRUMENT PANEL ONLY)	31-14-16	77	950951
CABIN ATTENDANTS PANELS	31-17-00		
HARNESS INSTL-ATTENDANT PROVISION LAV A (INDICATING/RECORDING SYSTEMS ONLY)	31-17-11	50	504903
PANEL AND PLACARD INSTL ATTENDANT PARTITION LH AFT (P22)	31-17-11	04	103106
PANEL INSTL-WINDSCREEN ATTENDANT FWD (P21) STA 379.21, LBL 30.31 WL 266.63, LH	31-17-11	05	103106

BOEING PROPRIETARY - Copyright © - Unpublished Work - See title page for details.

CHAPTER 31 — INDICATING AND RECORDING SYSTEMS

TABLE OF CONTENTS

SUBJECT	CC-SS-UU	FIGURE	EFFECT
CLOCKS	31-25-00		
CLOCK ASSY-GMT ELECTRONIC AND AIDS OUTPUT	31-25-01	10	002004 107107 121503 904949 952952
CLOCK ASSY-GMT ELECTRONIC AND AIDS OUTPUT	31-25-01	50	006106 108120 504903 950951 953999
GLARESHIELD ASSY-PILOTS ELECTRICAL (CLOCKS ONLY)	31-25-01	05	101106 108120 504903
GLARESHIELD ASSY-PILOTS ELECTRICAL (INDICATING/RECORDING ONLY)	31-25-51	01	002004 006999
PANEL INSTL-CAPT AND FIRST OFFICER FWD (CLOCKS ONLY)	31-25-01	01	002004 006010 107107 121503 904999
PANEL INSTL-CAPT AND FIRST OFFICER FWD (CLOCKS ONLY)	31-25-01	02	011100
PANEL INSTL-P1-1 AND P3-1 (CLOCKS ONLY)	31-25-01	06	504903
PANEL INSTL-P1-3 AND P3-3 (CLOCKS ONLY)	31-25-01	03	101106 108120

BOEING PROPRIETARY - Copyright © - Unpublished Work - See title page for details.

CHAPTER 31 — INDICATING AND RECORDING SYSTEMS

TABLE OF CONTENTS

SUBJECT	CC-SS-UU	FIGURE	EFFECT
FLIGHT DATA RECORDER SYSTEM (FDRS)	31-31-00		
ACQUISITION UNIT-DIGITAL FLIGHT DATA (CUSTOMER FURNSHED)	31-31-03	01A	002004 006100 107107 121999
EQUIPMENT AND SOFTWARE INSTL- MAIN ELECTRONICS EQPT CTR (FLIGHT DATA RECORDER SYSTEM ONLY)	31-31-03	01B	101102
EQUIPMENT AND SOFTWARE INSTL-MAIN ELECTRONICS EQPT CTR (FLIGHT DATA RECORDER SYSTEM ONLY)	31-31-03	01	002004 006100 107107 121999
EQUIPMENT AND SOFTWARE INSTL-MAIN ELECTRONICS EQPT CTR DFDAU	31-31-03	08	103106 108120
LATERAL CONTROL WHEEL DAMPER-KIT (FLIGHT DATA RECORDING SYSTEM ONLY)	31-31-09	01B	103105 108120
PACKAGE ASSY-OPTION P37 MISC RELAY (INSTRUMENTS ONLY)	31-31-71	02B	101102 504903
PANEL INSTL-P37 R MISC RELAY (FLIGHT DATA RECORDER SYSTEM ONLY)	31-31-71	02D	103106 108120
PANEL INSTL-P61 R SIDEWALL (FLIGHT DATA ENTRY PANEL/DATA MANAGEMENT ENTRY PANEL ONLY)	31-31-06	01	904949
PANEL INSTL-P61 R SIDEWALL (FLIGHT DATA RECORDER SYSTEM ONLY)	31-31-04	01	002004 006106 108903 950999
PANEL INSTL-P61 SIDEWALL (FLIGHT DATA ENTRY PANEL ONLY)	31-31-06	02	107107
P37 MISC RELAY R (INSTRUMENTS ONLY)	31-31-71	02	002004 006100 107107 121503 904999
RECORDER AND SUPPORT INSTL-FLIGHT (INSTRUMENTS ONLY)	31-31-01	01	002004 006999
RECORDER ASSY-UNIVERSAL FLIGHT DATA (UNDERWATER LOCATOR BEACON ONLY (CUSTOMER FURNISHED))	31-31-02	01	002004 006999

BOEING PROPRIETARY - Copyright © - Unpublished Work - See title page for details.

CHAPTER 31 — INDICATING AND RECORDING SYSTEMS

TABLE OF CONTENTS

SUBJECT	CC-SS-UU	FIGURE	EFFECT
SENSOR AND MODIFICATION INSTL- CONT WHEEL FLT DATA RECORDER	31-31-09	01	002004 006106 108903 950999
SENSOR AND MODIFICATION INSTL-CONTROL COLUMN	31-31-08	01	002004 006106 108903 950999
SENSOR INSTL-CONT WHEEL FLT DATA RECORDER	31-31-09	01A	106106
TRANSDUCER INSTL-3 AXIS ACCLRM (FLIGHT RECORDER ONLY)	31-31-51	01	002004 006999
TRANSMITTER INSTL-ALTERNATE BRAKE PRESSURE (LH)	31-31-13	01	002004 006106 108903 950999
TRANSMITTER INSTL-NORMAL BRAKE PRESSURE	31-31-13	02	002004 006106 108903 950999
AIRCRAFT INTEGRATED DATA SYSTEM (AIDS)	31-35-00		
EQUIPMENT AND SOFTWARE INSTL- MAIN ELECTRONICS EQPT CTR (AIRCRAFT INTEGRATED DATA SYSTEM ONLY)	31-35-51	01	504903
EQUIPMENT INSTL-MAIN ELECTRONICS EQPT CTR (QUICK ACCESS RECORDER ONLY)	31-35-01	02	002004 006100 121949 952999
EQUIPMENT INSTL-MAIN ELEX EQPT CTR QUICK ACCESS RECORDER	31-35-01	08	103106
SWITCH INSTL-BRAKE AIDS	31-35-11	01	103106 108949

BOEING PROPRIETARY - Copyright © - Unpublished Work - See title page for details.

CHAPTER 31 — INDICATING AND RECORDING SYSTEMS

TABLE OF CONTENTS

SUBJECT	CC-SS-UU	FIGURE	EFFECT
ENGINE INDICATION AND CREW ALERTING SYSTEM (EICAS)	31-41-00		
EQUIPMENT AND SOFTWARE INSTL- MAIN ELECTRONICS EQPT CTR ENG INDICATION AND CREW ALERTING SYS	31-41-02	08	103106 108120
EQUIPMENT AND SOFTWARE INSTL-MAIN ELECTRONICS EQPT CTR (EICAS COMPUTER ONLY)	31-41-02	01B	101102
EQUIPMENT AND SOFTWARE INSTL-MAIN ELECTRONICS EQPT CTR (EICAS COMPUTER ONLY)	31-41-02	02	504903
EQUIPMENT INSTL-MAIN ELECTRONICS EQPT CTR (EICAS COMPUTER ONLY)	31-41-02	01	002004 006100 107107 121503 904999
EQUIPMENT INSTL-MAIN ELECTRONICS EQPT CTR (EICAS DISPLAY SWITCHING MODULE ONLY)	31-41-04	01	002004 006100 107107 121999
EQUIPMENT INSTL-MAIN ELECTRONICS EQPT CTR (EICAS DISPLAY SWITCHING MODULE ONLY)	31-41-04	01B	101102
EQUIPMENT INSTL-MAIN ELECTRONICS EQPT CTR EICAS DISPLAY SWITCHING MODULE	31-41-04	08	103106 108120
PANEL INSTL-CAPT AND FIRST OFFICER FWD (ENGINE INDICATION AND CREW ALERTING SYSTEM ONLY)	31-41-52	01	002004 006010 107107 121503 904999
PANEL INSTL-CAPT AND FIRST OFFICER FWD AND P1-3 (ENGINE INDICATION AND CREW ALERTING SYSTEM ONLY)	31-41-52	02	011106 108120 504903
PANEL INSTL-EQPT CTR SVCE (INSTRUMENTS ONLY)	31-41-54	01	101106 108120 504903
PANEL INSTL-FWD CAPT AND FIRST OFFICER PREMODULE (ENGINE INDICATING AND CREW ALERTING SYSTEM ONLY)	31-41-01	01	002004 006999

BOEING PROPRIETARY - Copyright © - Unpublished Work - See title page for details.

CHAPTER 31 — INDICATING AND RECORDING SYSTEMS

TABLE OF CONTENTS

SUBJECT	CC-SS-UU	FIGURE	EFFECT
PANEL INSTL-P61 R SIDEWALL (ENGINE INDICATION AND CREW ALERTING SYSTEM ONLY)	31-41-53	01	002004 006999
PANEL INSTL-P8, P9,P10 ELECTRONICS (ENGINE INDICATING AND CREW ALERTING SYS ONLY)	31-41-03	01	002004 006100 107107 121503 904999
PANEL INSTL-P8,P9,P10 ELECTRONICS (CENTRAL COMPUTERS ONLY)	31-41-03	02	101106 108120 504903
SHELF ASSY-ELEC EQPT CTR E3-2 (INDICATING RECORDS SYSTEM ONLY)	31-41-00	01B	103106
SHELF ASSY-ELECTRONICS EQPT CTR E4-2 (INDICATING RECORDS SYSTEM ONLY)	31-41-00	01	103105
SHELF ASSY-ELECTRONICS EQPT CTR E4-3 (INDICATING RECORDS SYSTEM ONLY)	31-41-00	01A	103106
SWITCH INSTL-ELECTRONICS EQPT CTR ALTITUDE PRESSURE (INDICATING AND RECORDING SYSTEMS ONLY)	31-41-51	01	103106 108120 504903

BOEING PROPRIETARY - Copyright © - Unpublished Work - See title page for details.

CHAPTER 31 — INDICATING AND RECORDING SYSTEMS

TABLE OF CONTENTS

SUBJECT	CC-SS-UU	FIGURE	EFFECT
WARNING ELECTRONIC SYSTEM (WES)	31-51-00		
EQUIPMENT INSTL-MAIN ELECTRONICS EQPT CTR (WARNING SYSTEM ONLY)	31-51-01	01	002004 006100 107107 121503 904999
EQUIPMENT INSTL-MAIN ELECTRONICS EQPT CTR (WARNING SYSTEM ONLY)	31-51-01	01A	504903
EQUIPMENT INSTL-MAIN ELECTRONICS EQPT CTR (WARNING SYSTEM ONLY)	31-51-01	01B	101102
EQUIPMENT INSTL-MAIN ELECTRONICS EQPT CTR WARNING SYS	31-51-51	08	103106 108120
FILE ASSY-P51 (WARNING SYSTEM ONLY)	31-51-51	03	002004 006101 107107 121503 904999
FILE INSTL-ELECTRICAL SYS P50 CARD (WARNING SYSTEM ONLY)	31-51-61	02	102102 108120 504903
FILE INSTL-P51 (WARNING SYSTEM ONLY)	31-51-51	03A	102102 108120 504903
PANEL INSTL-CAPT AND FIRST OFFICER FWD (CAUTION AND WARNING SYSTEM ONLY)	31-51-52	01	002004 006010 107107 121503 904999
PANEL INSTL-CAPT AND FIRST OFFICER FWD AND P1-3 (WARNING SYSTEM ONLY)	31-51-52	02	011106 108120 504903
PANEL INSTL-MAP LIGHT AND SPKR CAPT AND FIRST OFFICER (INDICATING AND RECORDING ONLY)	31-51-11	05	011106 108120 504903
PANEL INSTL-P61 R SIDEWALL (WARNING SYSTEM ONLY)	31-51-51	01	002004 006999
PRINTED CIRCUIT ASSY-WEU BITE DISPLAY	31-51-61	01	002004 006999

BOEING PROPRIETARY - Copyright © - Unpublished Work - See title page for details.

ELECTRICAL / ELECTRONIC PANELS

BOEING PROPRIETARY - Copyright © - Unpublished Work - See title page for details.

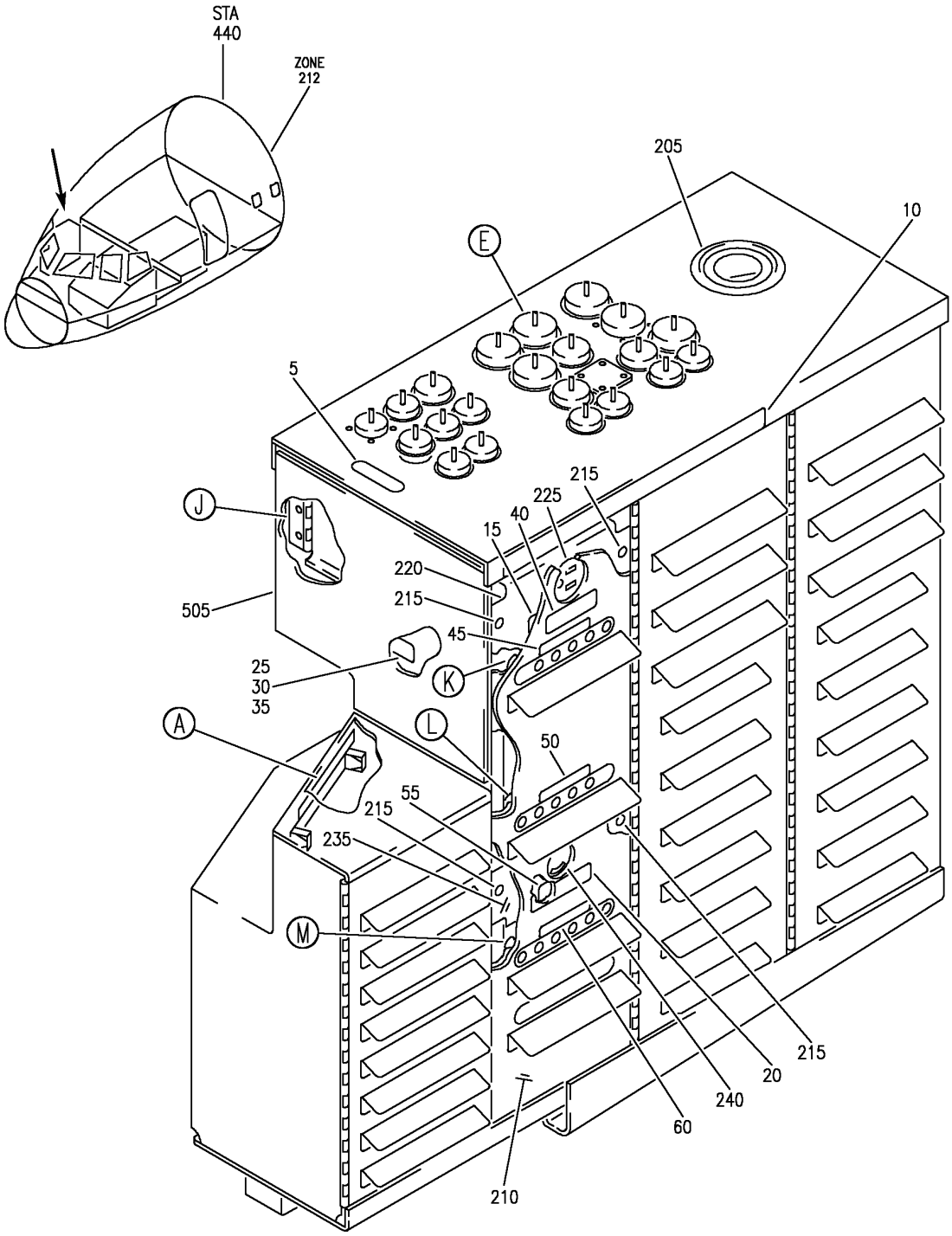

PANEL INSTL-P6 PWR DISTR (PANEL ONLY)
FIGURE 2 (SHEET 1)

BOEING PROPRIETARY - Copyright © - Unpublished Work - See title page for details.

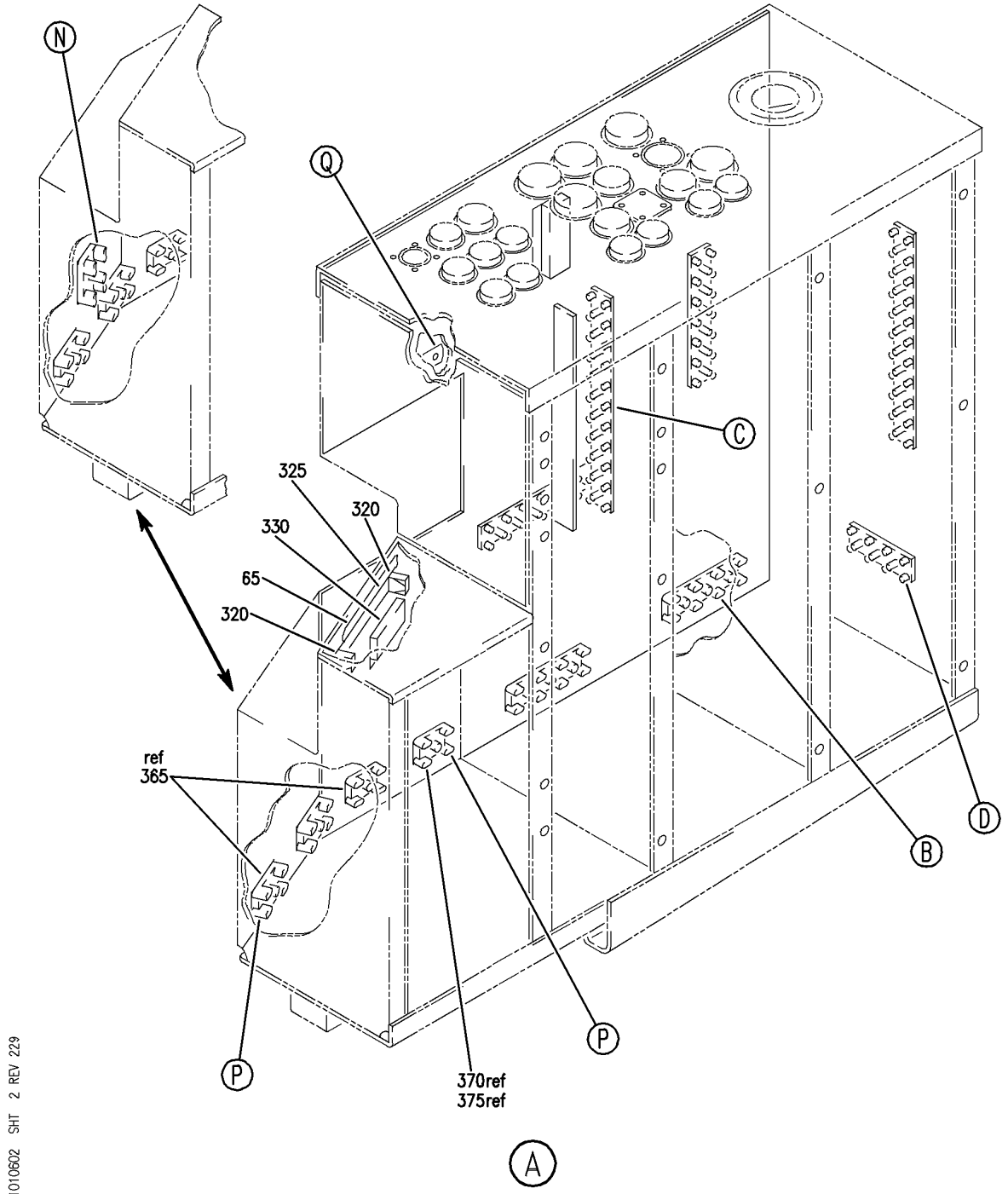

PANEL INSTL-P6 PWR DISTR (PANEL ONLY)
FIGURE 2 (SHEET 2)

BOEING PROPRIETARY - Copyright © - Unpublished Work - See title page for details.

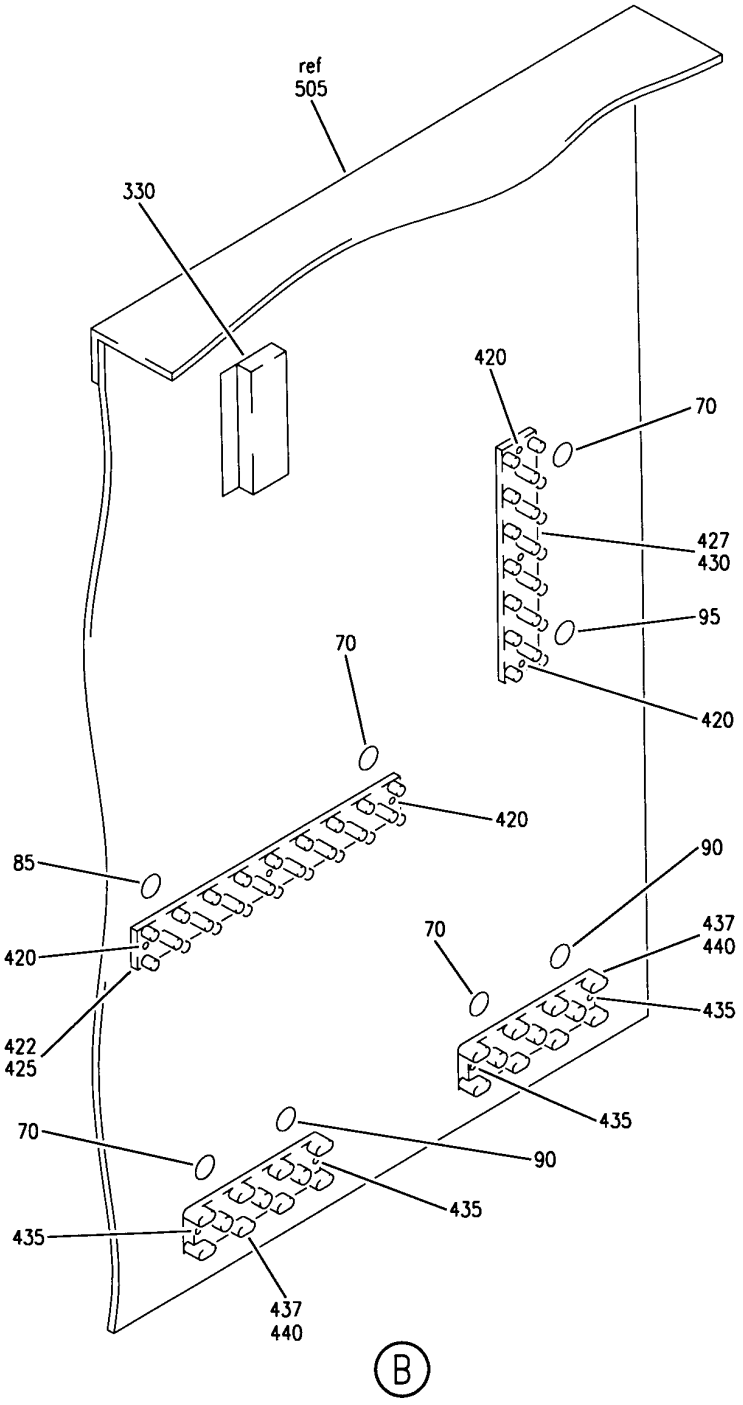

Y 31010602 SHT 3 REV 229

PANEL INSTL-P6 PWR DISTR (PANEL ONLY)
FIGURE 2 (SHEET 3)

BOEING PROPRIETARY - Copyright © - Unpublished Work - See title page for details.

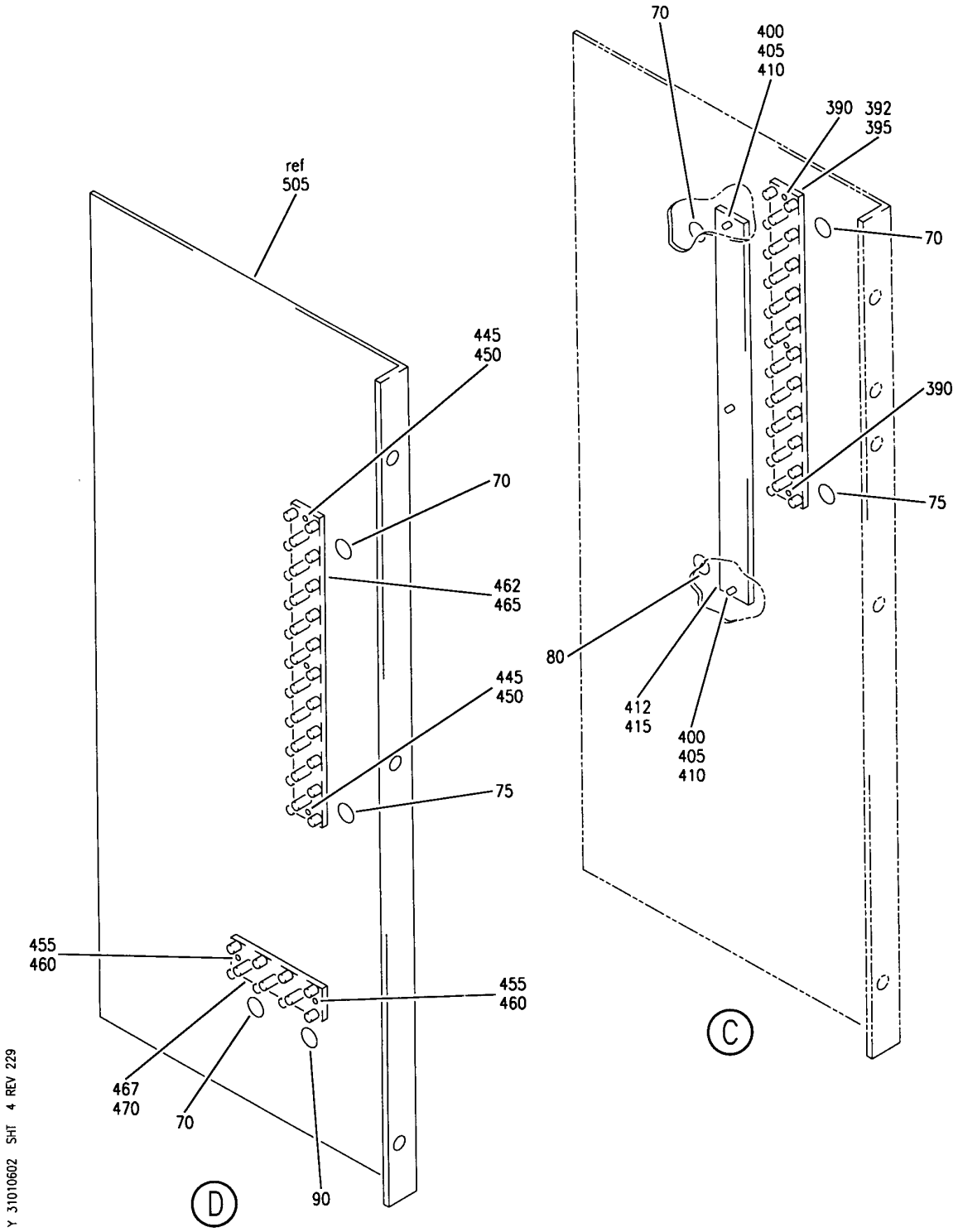

PANEL INSTL-P6 PWR DISTR (PANEL ONLY)
FIGURE 2 (SHEET 4)

BOEING PROPRIETARY - Copyright © - Unpublished Work - See title page for details.

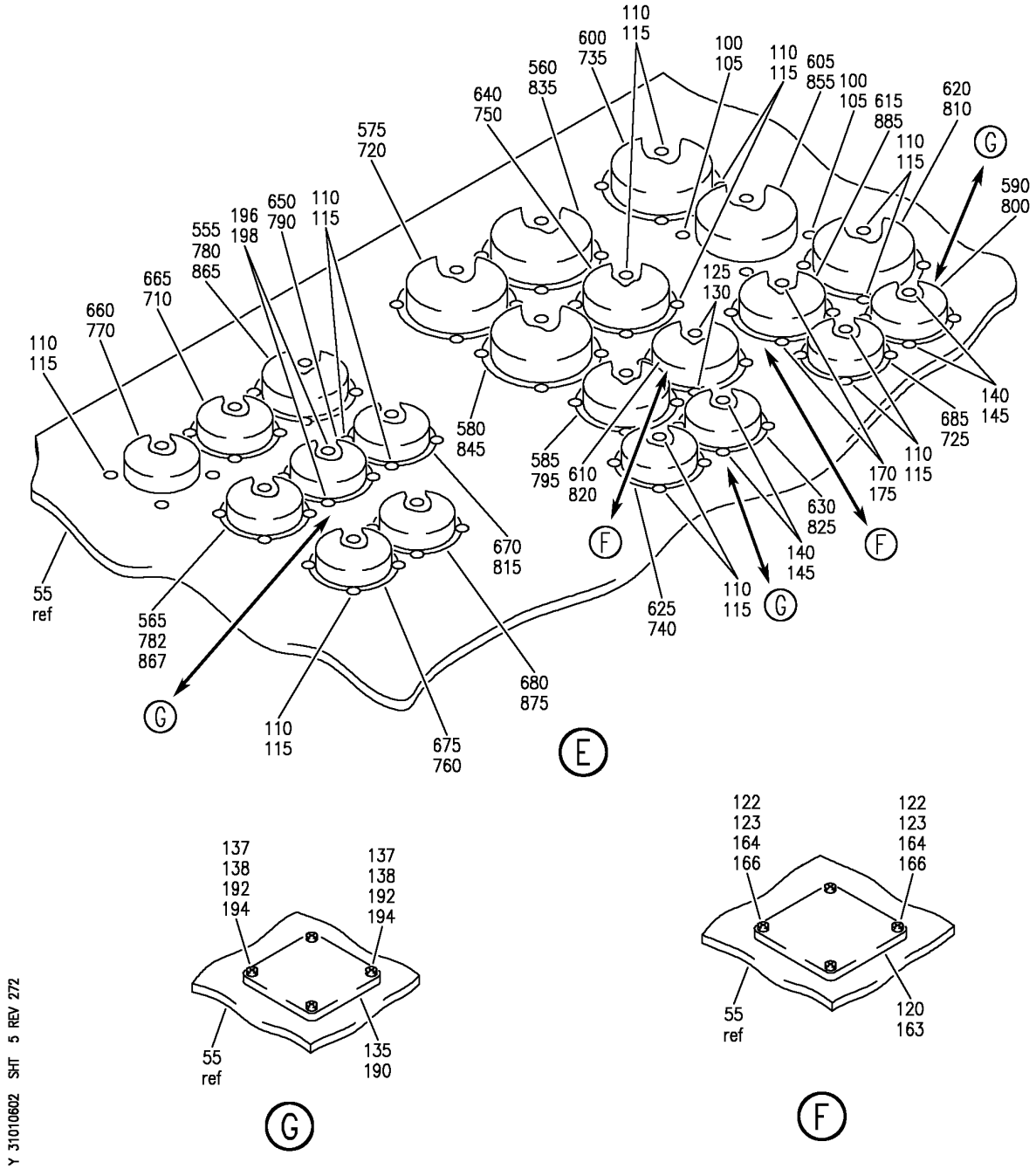

PANEL INSTL-P6 PWR DISTR (PANEL ONLY)
FIGURE 2 (SHEET 5)

BOEING PROPRIETARY - Copyright © - Unpublished Work - See title page for details.

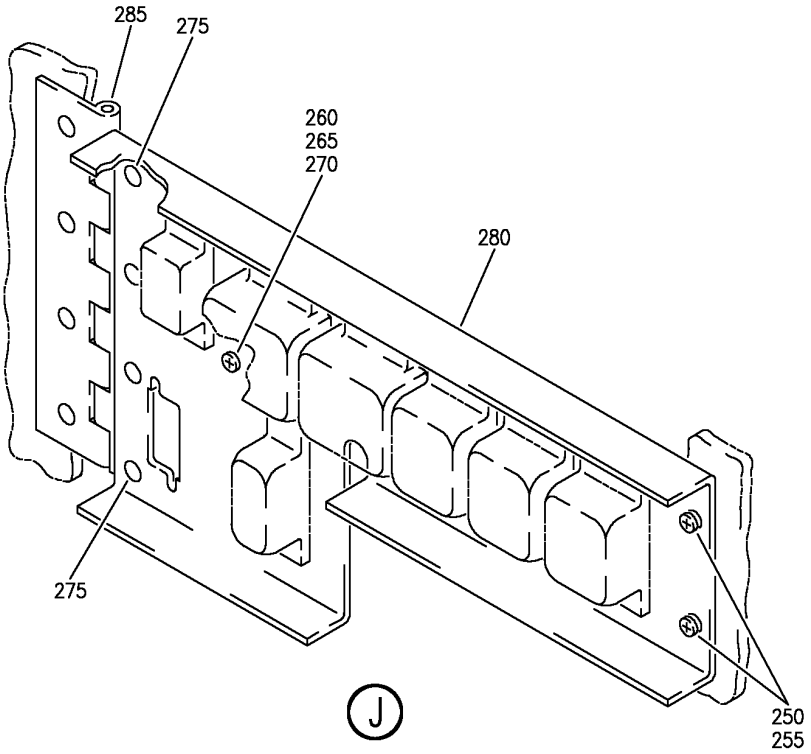

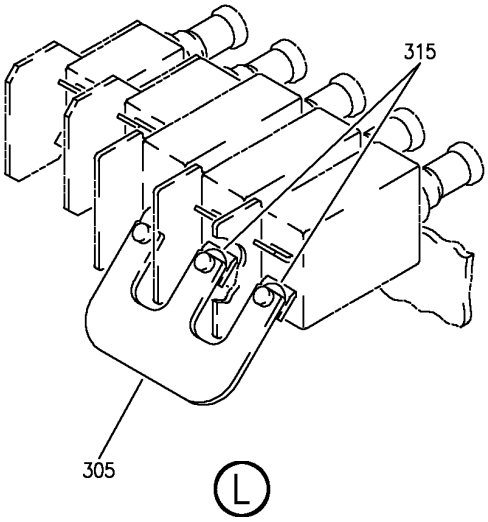

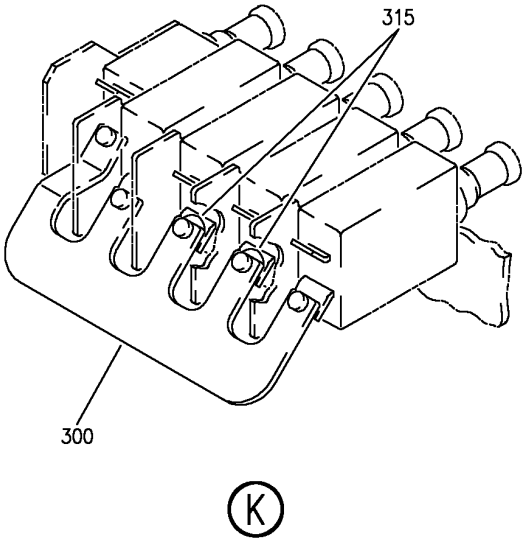

Y 31010602 SHT 6 REV 272

PANEL INSTL-P6 PWR DISTR (PANEL ONLY)
FIGURE 2 (SHEET 6)

BOEING PROPRIETARY - Copyright © - Unpublished Work - See title page for details.

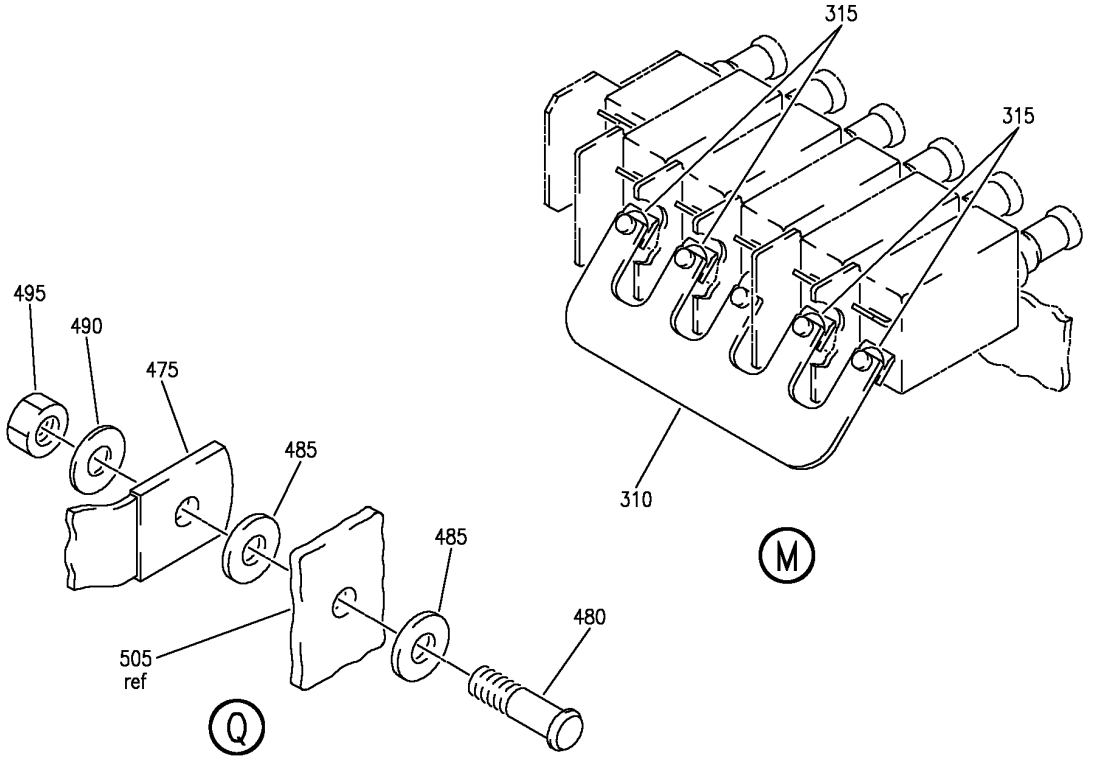

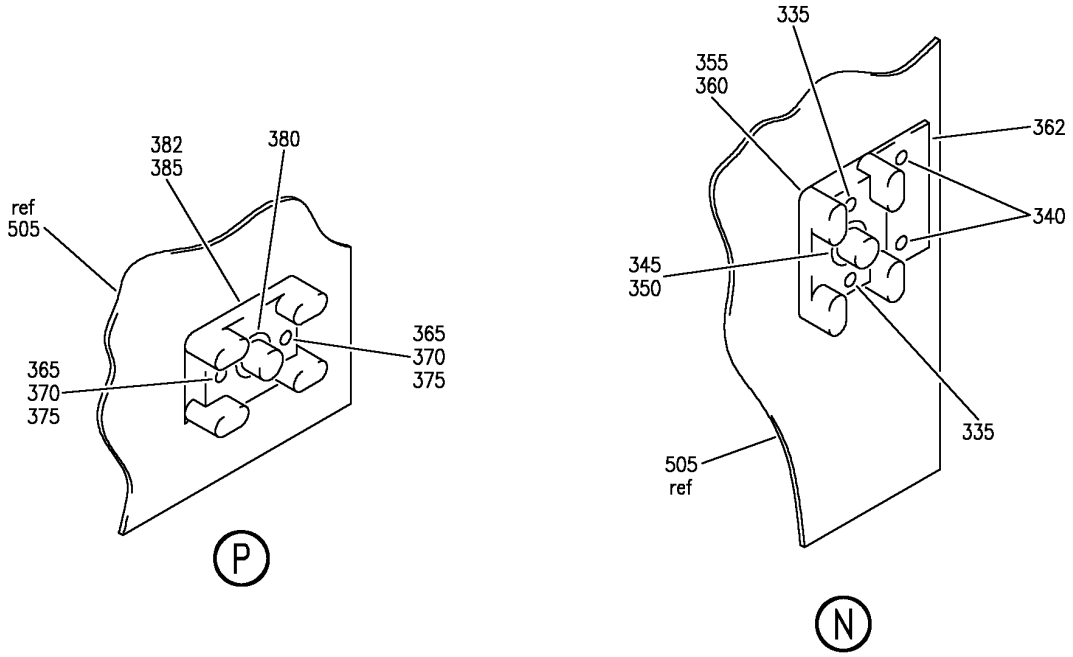

Y 31010602 SHT 7 REV 272

PANEL INSTL-P6 PWR DISTR (PANEL ONLY)
FIGURE 2 (SHEET 7)

BOEING PROPRIETARY - Copyright © - Unpublished Work - See title page for details.

FIG ITEM	PART NUMBER	1 2 3 4 5 6 7 NOMENCLATURE	EFFECT FROM TO	UNITS PER ASSY
2				
		PANEL INSTL-P6 PWR DISTR	103106	
		(PANEL ONLY)	108120	
- 1	287N4102-408	PANEL INSTL-P6 PWR DISTR	108120	RF
		(PANEL ONLY)		
		FOR NHA/OTHER SYS DET SEE:		
		24-00-58-05F		
- 4	MODREF31408	PANEL INSTL-P6 PWR DISTR	103106	1
		(PANEL ONLY)		
		MODULE NUMBER:		
		287N4102-437 REV A		
		FOR OTHER SYS DETAILS SEE:		
		11-34-05-07		
		24-31-06-01		
		24-31-71-09		
		24-32-02-01		
		24-32-03-01		
		24-33-01-01		
		24-51-05-01		
		24-51-06-01		
		24-51-07-01		
		24-51-52-08		
		24-51-52-09		
		24-51-52-10		
		24-51-73-02		
		24-53-52-02		
5	BAC27NEX2644	.DECAL-	103106	1
		PLACARD CONTENT:	108120	
		AP0006		
10	BAC27NEL0015	.DECAL-	103106	1
		PLACARD CONTENT:	108120	
		P6 MAIN POWER		
		DISTRIBUTION PANEL		
15	BAC27NEX2971	.MARKER-ALUMINUM FOIL	103106	1
		PLACARD CONTENT:	108120	
		D880 115VAC 400HZ		
20	BAC27NEX2972	.MARKER-ALUMINUM FOIL	103106	1
		PLACARD CONTENT:	108120	
		D4020 28VDC		
30	BAC27NEX2611	.DECAL-	108120	1
35	BAC27NEX3086	.DECAL	103106	1
40	BAC27NEL0979	.DECAL-	103106	1
		PLACARD CONTENT:	108120	
		SERVICE OUTLET 115		
		VAC 400 HZ		
45	BAC27NEL0981	.DECAL-	103106	1
		PLACARD CONTENT:	108120	
		HOT BATTERY BUS		

MISSING ITEM NUMBERS NOT APPLICABLE

- ITEM NOT ILLUSTRATED

BOEING PROPRIETARY - Copyright © - Unpublished Work - See title page for details.

FIG ITEM	PART NUMBER	1 2 3 4 5 6 7 NOMENCLATURE	EFFECT FROM TO	UNITS PER ASSY
2				
50	BAC27NEL0021	.DECAL-	103106	1
		PLACARD CONTENT:	108120	
		RIGHT DC BUS		
55	BAC27NEL0980	.DECAL-	103106	1
		PLACARD CONTENT:	108120	
		SERVICE OUTLET 28VDC		
60	BAC27NEL0022	.DECAL-	103106	1
		PLACARD CONTENT:	108120	
		LEFT DC BUS		
65	BAC27NEX0936	.DECAL-	103106	1
		PLACARD CONTENT:	108120	
		1 THRU 22		
100	NAS1801-06-6	.SCREW	103106	4
			108120	
105	MS21042L06	.NUT	103106	4
			108120	
110	NAS1801-04-6	.SCREW	103106	64
			108120	
115	K19798-04	.NUT	103106	64
		SUPPLIER CODE:	108120	
		V15653		
		SPECIFICATION NUMBER:		
		BACN10NW1		
		OPTIONAL PART:		
		RMA4812-160-40		
		V72962		
		293162		
		V60119		
120	287N4102-1122	.COVER-	108120	1
		POSITION DATA:		
		POS 16		
		ATTACHING PARTS		
122	NAS1801-04-5	.SCREW	108120	4
123	MS21042L04	.NUT	108120	4
		-------*-------		
125	NAS1801-04-6	.SCREW	103106	4
130	K19798-04	.NUT	103106	4
		SUPPLIER CODE:		
		V15653		
		SPECIFICATION NUMBER:		
		BACN10NW1		
		OPTIONAL PART:		
		RMA4812-160-40		
		V72962		
		293162		
		V60119		
135	287N4102-1089	.PLATE-COVER	103106	2
		POSITION DATA:	108120	
		POS 20,22		

MISSING ITEM NUMBERS NOT APPLICABLE

– ITEM NOT ILLUSTRATED

BOEING PROPRIETARY - Copyright © - Unpublished Work - See title page for details.

FIG ITEM	PART NUMBER	1 2 3 4 5 6 7 NOMENCLATURE	EFFECT FROM TO	UNITS PER ASSY
2				
		ATTACHING PARTS		
137	NAS1801-04-5	.SCREW	103106 108120	8
138	MS21042L04	.NUT	103106 108120	8
		-------*-------		
163	287N4102-1122	.COVER-	103106	1
		POSITION DATA:		
		POS 17		
		ATTACHING PARTS		
164	NAS1801-04-5	.SCREW	103106	4
166	MS21042L04	.NUT	103106	4
		-------*-------		
170	NAS1801-04-6	.SCREW	108120	4
175	K19798-04	.NUT	108120	4
		SUPPLIER CODE:		
		V15653		
		SPECIFICATION NUMBER:		
		BACN10NW1		
		OPTIONAL PART:		
		RMA4812-160-40		
		V72962		
		293162		
		V60119		
190	287N4102-1036	.PLATE-	103106	1
		POSITION DATA:		
		POS 08		
		ATTACHING PARTS		
192	NAS1801-04-5	.SCREW	103106	4
194	MS21042L04	.NUT	103106	4
		-------*-------		
196	NAS1801-04-6	.SCREW	108120	4
198	K19798-04	.NUT	108120	4
		SUPPLIER CODE:		
		V15653		
		SPECIFICATION NUMBER:		
		BACN10NW1		
		OPTIONAL PART:		
		RMA4812-160-40		
		V72962		
		293162		
		V60119		
205	201-12	.SEAL-	103106 108120	1
		SUPPLIER CODE:		
		V0767B		
		OPTIONAL PART:		
		281131-12		
		V0767B		

MISSING ITEM NUMBERS NOT APPLICABLE

— ITEM NOT ILLUSTRATED

BOEING PROPRIETARY - Copyright © - Unpublished Work - See title page for details.

FIG ITEM	PART NUMBER	1 2 3 4 5 6 7 NOMENCLATURE	EFFECT FROM TO	UNITS PER ASSY
2				
205	281131-12	.SEAL-	103106	1
		SUPPLIER CODE:	108120	
		V0767B		
		OPTIONAL PART:		
		201-12		
		V0767B		
210	287N4177-11	.DOOR ASSY	103106	1
			108120	
		ATTACHING PARTS		
- 212	NAS1801-3-8	.SCREW	103106	6
			108120	
		-------*-------		
215	NAS514P1032-8	.SCREW	103106	4
			108120	
220	287N4177-16	.CHANNEL	103106	1
			108120	
225	53CM61GY	.OUTLET-	103106	1
		SUPPLIER CODE:	108120	
		V74545		
		ELECTRICAL EQUIP NUMBER:		
		D00880		
		OPTIONAL PART:		
		53CM61		
		V74545		
225	53CM61	.OUTLET-	103106	1
		SUPPLIER CODE:	108120	
		V74545		
		ELECTRICAL EQUIP NUMBER:		
		D00880		
		OPTIONAL PART:		
		53CM61GY		
		V74545		
		ATTACHING PARTS		
- 230	NAS514P832-10	.SCREW	103106	2
			108120	
- 232	NAS1149D0863J	.WASHER	103106	2
			108120	
- 234	MS21042L08	.NUT	103106	2
			108120	
		-------*-------		
235	287N4177-5	.CHANNEL	103106	1
			108120	
240	7487	.OUTLET-	103106	1
		SUPPLIER CODE:	108120	
		V74545		
		ELECTRICAL EQUIP NUMBER:		
		D04020		

MISSING ITEM NUMBERS NOT APPLICABLE

- ITEM NOT ILLUSTRATED

BOEING PROPRIETARY - Copyright © - Unpublished Work - See title page for details.

FIG ITEM	PART NUMBER	1 2 3 4 5 6 7 NOMENCLATURE	EFFECT FROM TO	UNITS PER ASSY
2				
		ATTACHING PARTS		
- 245	NAS514P632-6	.SCREW	103106 108120	2
- 247	NAS1149DN616J	.WASHER	103106 108120	2
- 248	MS21042L06	.NUT	103106 108120	2
		-------*-------		
250	NAS1801-06-7	.SCREW	103106 108120	2
255	NAS1149DN616H	.WASHER	103106 108120	2
260	NAS603-24P	.SCREW	103106 108120	1
265	NAS43DD3-64FC	.SPACER	103106 108120	1
270	MS21042L3	.NUT	103106 108120	1
275	BACR15BB4ADC	.RIVET- SIZE DETERMINED ON INSTL.	103106 108120	4
280	287N4102-177	.PANEL-RELAY MTG	103106 108120	1
285	287N4102-1050	.HINGE- ALTERED FROM PART NUMBER: MS20257P5-450	103106 108120	1
		ATTACHING PARTS		
- 290	NAS1801-06-6	.SCREW	103106 108120	4
		-------*-------		
300	287N1125-6	.BUSS-	103106 108120	1
305	287N1125-4	.BUSS	103106 108120	1
310	287N1125-3	.BUSS	103106 108120	1
315	AN961-10T	.WASHER	103106 108120	8
320	H49-2	.CLAMP SUPPLIER CODE: V34941 SPECIFICATION NUMBER: BACC49A2 OPTIONAL PART: MF104-2 V6E102	103106 108120	2

MISSING ITEM NUMBERS NOT APPLICABLE

- ITEM NOT ILLUSTRATED

BOEING PROPRIETARY - Copyright © - Unpublished Work - See title page for details.

FIG ITEM	PART NUMBER	1 2 3 4 5 6 7 NOMENCLATURE	EFFECT FROM TO	UNITS PER ASSY
2				
325	AMY0700T1	.TRACK-	103106	1
		SUPPLIER CODE:	108120	
		V09922		
		SPECIFICATION NUMBER:		
		BACT44A0700U		
		ELECTRICAL EQUIP NUMBER:		
		TB0024		
330	BLOCK16	.BLOCK-TERM. GND	103106	2
		SUPPLIER CODE:	108120	
		V00000		
		ELECTRICAL EQUIP NUMBER:		
		GD00528		
		GD00529		
335	NAS601-6P	.SCREW	103106	2
			108120	
340	NAS603-7P	.SCREW	103106	2
			108120	
345	MS14151-5	.WASHER	103106	1
			108120	
350	MS21042L06	.NUT	103106	1
			108120	
355	MS18029-5L1	.COVER ASSY	103106	1
			108120	
360	MS27212-5-1	.TERMINAL BOARD ASSY-	103106	1
		ELECTRICAL EQUIP NUMBER:	108120	
		TB5017		
362	287N4102-129	.BRACKET ASSY	103106	1
			108120	
365	NAS601-6P	.SCREW	103106	6
			108120	
370	NAS601-10P	.SCREW	103106	2
			108120	
375	NAS43DD1-16FC	.SPACER	103106	2
			108120	
380	MS14151-3	.WASHER	103106	4
			108120	
382	MS18029-3S1	.COVER ASSY	103106	4
			108120	
385	MS27212-3-1	.TERMINAL BOARD ASSY-	103106	4
		ELECTRICAL EQUIP NUMBER:	108120	
		TB5007		
		TB5008		
		TB5009		
		TB5010		
390	NAS600-6P	.SCREW	103106	3
			108120	
392	MS18029-2S10	.COVER ASSY	103106	1
			108120	

MISSING ITEM NUMBERS NOT APPLICABLE

– ITEM NOT ILLUSTRATED

BOEING PROPRIETARY - Copyright © - Unpublished Work - See title page for details.

FIG ITEM	PART NUMBER	1 2 3 4 5 6 7 NOMENCLATURE	EFFECT FROM TO	UNITS PER ASSY
2				
395	MS27212-2-10	.BOARD ASSY- ELECTRICAL EQUIP NUMBER: TB5011	103106 108120	1
400	NAS1801-04-6	.SCREW	103106 108120	3
405	NAS1149DN416J	.WASHER	103106 108120	3
410	MS21042L04	.NUT	103106 108120	3
412	MS18029-2S12	.COVER ASSY	103106 108120	1
415	MS27212-2-12	.TERMINAL BOARD ASSY- ELECTRICAL EQUIP NUMBER: TB5019	103106 108120	1
420	NAS600-8P	.SCREW	103106 108120	6
422	MS18029-2S8	.COVER ASSY	103106 108120	1
425	MS27212-2-8	.BOARD ASSY- ELECTRICAL EQUIP NUMBER: TB5013	103106 108120	1
427	MS18029-2S6	.COVER ASSY	103106 108120	1
430	MS27212-2-6	.TERMINAL BOARD ASSY- ELECTRICAL EQUIP NUMBER: TB5016	103106 108120	1
435	NAS601-6P	.SCREW	103106 108120	4
437	MS18029-3S3	.COVER ASSY	103106 108120	2
440	MS27212-3-3	.BOARD ASSY- ELECTRICAL EQUIP NUMBER: TB5012 TB5014	103106 108120	2
445	NAS514P440-6P	.SCREW	103106 108120	3
450	MS21042L04	.NUT	103106 108120	3
462	MS18029-2S10	.COVER ASSY	103106 108120	1
465	MS27212-2-10	.BOARD ASSY- ELECTRICAL EQUIP NUMBER: TB5025	103106 108120	1
467	MS18029-2S3	.COVER ASSY	103106 108120	1
470	MS27212-2-3	.TERMINAL BOARD ASSY- ELECTRICAL EQUIP NUMBER: TB5015	103106 108120	1

MISSING ITEM NUMBERS NOT APPLICABLE

– ITEM NOT ILLUSTRATED

BOEING PROPRIETARY - Copyright © - Unpublished Work - See title page for details.

FIG ITEM	PART NUMBER	1 2 3 4 5 6 7 NOMENCLATURE	EFFECT FROM TO	UNITS PER ASSY
2				
475	RBEJ40E40-24	.JUMPER ASSY	103106	1
		SUPPLIER CODE:	108120	
		V1GK47		
		SPECIFICATION NUMBER:		
		BACJ40E40-24		
		OPTIONAL PART:		
		740E40-24		
		V91812		
		ATTACHING PARTS		
480	HL1050PB12-5	.BOLT	103106	1
		SUPPLIER CODE:	108120	
		V97928		
		SPECIFICATION NUMBER:		
		BACB30MB12-5		
		OPTIONAL PART:		
		HL20PB12-5		
		V73197		
		HL20PB12-5		
		V92215		
		HL20PB12-5		
		V97928		
		69307-12-5		
		V56878		
		HL20PB12-5		
		V80539		
		L80612-5		
		V06725		
		HL20PB12-5		
		V60516		
		HL20PB12-5		
		V08524		
		HL20-12-5		
		V06725		
		HL20PB12-5		
		V56878		
		WC80612-5		
		V60516		
		HL1050PB12-5		
		V56878		
		HL1050PB12-5		
		V60516		
		HL1050PB12-5		
		V73197		
		HL1050PB12-5		
		V80539		
485	NAS1149D0616J	.WASHER	103106	2
			108120	
490	NAS1149F0632P	.WASHER	103106	1
			108120	

MISSING ITEM NUMBERS NOT APPLICABLE

– ITEM NOT ILLUSTRATED

BOEING PROPRIETARY - Copyright © - Unpublished Work - See title page for details.

FIG ITEM	PART NUMBER	1 2 3 4 5 6 7 NOMENCLATURE	EFFECT FROM TO	UNITS PER ASSY
2				
495	MS21042L6	.NUT	103106 108120	1
		-------*-------		
505	287N4167-5	.PANEL ASSY- FOR DETAILS SEE: 31-01-06-10	103106 108120	1
- 551	286N0060-327	WIRE BUNDLE ASSY	108120	1
- 551	286N0060-601	WIRE BUNDLE ASSY	103106	1
555	BACC45FN16-24S6	.CONNECTOR- ELECTRICAL EQUIP NUMBER: D41904J WIRING DIAGRAM REF: 262111	103106 108120	1
560	BACC45FN22-32S	.CONNECTOR- ELECTRICAL EQUIP NUMBER: D40246J WIRING DIAGRAM REF: 241121	103106 108120	1
565	BACC45FN14-15S6	.RECEPTACLE- ELECTRICAL EQUIP NUMBER: D40870J WIRING DIAGRAM REF: 282111	103106 108120	1
- 570	286N0062-319	WIRE BUNDLE ASSY	108120	1
- 571	286N0062-601	WIRE BUNDLE ASSY	103106	1
575	BACC45FN22-12S8	.RECEPTACLE- ELECTRICAL EQUIP NUMBER: D40240J WIRING DIAGRAM REF: 245111	103106 108120	1
580	BACC45FN22-32S9	.RECEPTACLE- ELECTRICAL EQUIP NUMBER: D40866J WIRING DIAGRAM REF: 303111	103106 108120	1
585	BACC45FN18-8S6	.RECEPTACLE- ELECTRICAL EQUIP NUMBER: D40242J WIRING DIAGRAM REF: 243211	103106 108120	1
- 596	286N0064-321	WIRE BUNDLE ASSY	108120	1
- 596	286N0064-701	WIRE BUNDLE ASSY-	103106	1
600	BACC45FN22-12S6	.RECEPTACLE- ELECTRICAL EQUIP NUMBER: D40248J WIRING DIAGRAM REF: 245121	103106 108120	1

MISSING ITEM NUMBERS NOT APPLICABLE

- ITEM NOT ILLUSTRATED

BOEING PROPRIETARY - Copyright © - Unpublished Work - See title page for details.

FIG ITEM	PART NUMBER	1 2 3 4 5 6 7 NOMENCLATURE	EFFECT FROM TO	UNITS PER ASSY
2				
605	BACC45FN24-43S9	.RECEPTACLE-	103106	1
		ELECTRICAL EQUIP NUMBER:	108120	
		D40868J		
		WIRING DIAGRAM REF:		
		303112		
615	BACC45FN18-14S8	.RECEPTACLE-	108120	1
		ELECTRICAL EQUIP NUMBER:		
		D40168J		
		WIRING DIAGRAM REF:		
		243241		
		252911		
620	BACC45FN22-12S	.RECEPTACLE-	103106	1
		ELECTRICAL EQUIP NUMBER:	108120	
		D40250J		
		WIRING DIAGRAM REF:		
		243211		
		303311		
625	BACC45FN14-12S8	.RECEPTACLE-	108120	1
		ELECTRICAL EQUIP NUMBER:		
		D42204J		
		WIRING DIAGRAM REF:		
		245172		
625	BACC45FN14-15S8	.RECEPTACLE-	103106	1
		ELECTRICAL EQUIP NUMBER:		
		D42204J		
		WIRING DIAGRAM REF:		
		245172		
- 635	286N0068-301	WIRE BUNDLE ASSY	108120	1
- 635	286N0068-701	WIRE BUNDLE ASSY	103106	1
640	BACC45FN18-8S7	.RECEPTACLE-	103106	1
		ELECTRICAL EQUIP NUMBER:	108120	
		D40244J		
		WIRING DIAGRAM REF:		
		245473		
- 645	286N0072-302	WIRE BUNDLE ASSY	108120	1
- 645	286N0072-601	WIRE BUNDLE ASSY	103106	1
650	BACC45FN14-15S9	.RECEPTACLE-	108120	1
		ELECTRICAL EQUIP NUMBER:		
		D40284J		
		WIRING DIAGRAM REF:		
		242311		
650	BACC45FN14-7S9	.CONNECTOR-	103106	1
		ELECTRICAL EQUIP NUMBER:		
		D40284J		
		WIRING DIAGRAM REF:		
		783451		
- 655	286N0074-318	WIRE BUNDLE ASSY	108120	1
- 656	286N0074-701	WIRE BUNDLE ASSY-	103106	1

MISSING ITEM NUMBERS NOT APPLICABLE

- ITEM NOT ILLUSTRATED

BOEING PROPRIETARY - Copyright © - Unpublished Work - See title page for details.

FIG ITEM	PART NUMBER	1 2 3 4 5 6 7 NOMENCLATURE	EFFECT FROM TO	UNITS PER ASSY
2				
660	BACC45FN20-39S	.RECEPTACLE- ELECTRICAL EQUIP NUMBER: D40296J WIRING DIAGRAM REF: 243311	103106 108120	1
665	BACC45FN14-7S8	.RECEPTACLE- ELECTRICAL EQUIP NUMBER: D40298J WIRING DIAGRAM REF: 245131	103106 108120	1
670	BACC45FN12-12S7	.CONNECTOR- ELECTRICAL EQUIP NUMBER: D40286J WIRING DIAGRAM REF: 243411	103106 108120	1
675	BACC45FN12-12S8	.CONNECTOR- ELECTRICAL EQUIP NUMBER: D40282J WIRING DIAGRAM REF: 243111	103106 108120	1
680	BACC45FN12-12S	.CONNECTOR- ELECTRICAL EQUIP NUMBER: D40300J WIRING DIAGRAM REF: 245131	103106 108120	1
685	BACC45FN14-12S6	.RECEPTACLE- ELECTRICAL EQUIP NUMBER: D42206J WIRING DIAGRAM REF: 245172	108120	1
685	BACC45FN14-15S6	.RECEPTACLE- ELECTRICAL EQUIP NUMBER: D42206J WIRING DIAGRAM REF: 245172	103106	1
- 690	YHLZ16-2	.MODULE- SUPPLIER CODE: V09922 SPECIFICATION NUMBER: BACM15C3A OPTIONAL PART: TBH120450 V58982 421120-450 V58982 ELECTRICAL EQUIP NUMBER: TB0024X WIRING DIAGRAM REF: 243411	103106 108120	1

MISSING ITEM NUMBERS NOT APPLICABLE

- ITEM NOT ILLUSTRATED

BOEING PROPRIETARY - Copyright © - Unpublished Work - See title page for details.

FIG ITEM	PART NUMBER	1 2 3 4 5 6 7 NOMENCLATURE	EFFECT FROM TO	UNITS PER ASSY
2				
- 695	YHLZ16-4	.MODULE-	103106	1
		SUPPLIER CODE:	108120	
		V09922		
		SPECIFICATION NUMBER:		
		BACM15C3B		
		OPTIONAL PART:		
		421120-452		
		V58982		
		TBH120452		
		V58982		
		ELECTRICAL EQUIP NUMBER:		
		TB0024Y		
		WIRING DIAGRAM REF:		
		243411		
- 700	YHLZ16-8	.MODULE-	103106	1
		SUPPLIER CODE:	108120	
		V09922		
		SPECIFICATION NUMBER:		
		BACM15C3C		
		OPTIONAL PART:		
		421120-454		
		V58982		
		TBH120454		
		V58982		
		ELECTRICAL EQUIP NUMBER:		
		TB0024Z		
		WIRING DIAGRAM REF:		
		243411		
- 705	286N2010-301	WIRE BUNDLE ASSY	108120	1
- 705	286N2010-701	WIRE BUNDLE ASSY	103106	1
710	BACC45FT14-7P8	.PLUG-	103106	1
		ELECTRICAL EQUIP NUMBER:	108120	
		D40298P		
		WIRING DIAGRAM REF:		
		245131		
- 715	286N2012-301	WIRE BUNDLE ASSY	108120	1
- 715	286N2012-701	WIRE BUNDLE ASSY-	103106	1
720	BACC45FT22-12P8	.PLUG-	103106	1
		ELECTRICAL EQUIP NUMBER:	108120	
		D40240P		
		WIRING DIAGRAM REF:		
		245112		
		245411		
725	BACC45FT14-12P6	.PLUG-	108120	1
		ELECTRICAL EQUIP NUMBER:		
		D42206P		
		WIRING DIAGRAM REF:		
		245172		

MISSING ITEM NUMBERS NOT APPLICABLE

- ITEM NOT ILLUSTRATED

BOEING PROPRIETARY - Copyright © - Unpublished Work - See title page for details.

FIG ITEM	PART NUMBER	1 2 3 4 5 6 7 NOMENCLATURE	EFFECT FROM TO	UNITS PER ASSY
2				
725	BACC45FT14-15P6	.PLUG-	103106	1
		ELECTRICAL EQUIP NUMBER:		
		D42206P		
		WIRING DIAGRAM REF:		
		245172		
- 730	286N2014-301	WIRE BUNDLE ASSY	108120	1
- 730	286N2014-701	WIRE BUNDLE ASSY-	103106	1
735	BACC45FT22-12P6	.PLUG-	103106	1
		ELECTRICAL EQUIP NUMBER:	108120	
		D40248P		
		WIRING DIAGRAM REF:		
		245121		
		245122		
740	BACC45FT14-12P8	.PLUG-	108120	1
		ELECTRICAL EQUIP NUMBER:		
		D42204P		
		WIRING DIAGRAM REF:		
		245172		
740	BACC45FT14-15P8	.PLUG-	103106	1
		ELECTRICAL EQUIP NUMBER:		
		D42204P		
		WIRING DIAGRAM REF:		
		245172		
- 745	286N2016-301	WIRE BUNDLE ASSY	108120	1
- 745	286N2016-701	WIRE BUNDLE ASSY	103106	1
750	BACC45FT18-8P7	.PLUG-	103106	1
		ELECTRICAL EQUIP NUMBER:	108120	
		D40244P		
		WIRING DIAGRAM REF:		
		245473		
- 755	286N2034-301	WIRE BUNDLE ASSY	108120	1
- 755	286N2034-701	WIRE BUNDLE ASSY	103106	1
760	BACC45FT12-12P8	.PLUG-	103106	1
		ELECTRICAL EQUIP NUMBER:	108120	
		D40282P		
		WIRING DIAGRAM REF:		
		243111		
- 766	286N2078-331	WIRE BUNDLE ASSY	108120	1
- 767	286N2078-601	WIRE BUNDLE ASSY	103106	1
770	BACC45FT20-39P	.PLUG-	103106	1
		ELECTRICAL EQUIP NUMBER:	108120	
		D40296P		
		WIRING DIAGRAM REF:		
		243311		
- 776	286N2156-335	WIRE BUNDLE ASSY	108120	RF
- 777	286N2156-601	WIRE BUNDLE ASSY	103106	RF

MISSING ITEM NUMBERS NOT APPLICABLE

- ITEM NOT ILLUSTRATED

BOEING PROPRIETARY - Copyright © - Unpublished Work - See title page for details.

FIG ITEM	PART NUMBER	1 2 3 4 5 6 7 NOMENCLATURE	EFFECT FROM TO	UNITS PER ASSY
2				
780	BACC45FT16-24P6	.PLUG-	103106	1
		ELECTRICAL EQUIP NUMBER:	108120	
		D41904P		
		WIRING DIAGRAM REF:		
		262111		
- 785	286N2240-304	WIRE BUNDLE ASSY	108120	1
790	BACC45FT14-15P9	.PLUG-	108120	1
		ELECTRICAL EQUIP NUMBER:		
		D40284P		
		WIRING DIAGRAM REF:		
		242311		
795	BACC45FT18A8P6	.PLUG-	108120	1
		ELECTRICAL EQUIP NUMBER:		
		D40242P		
		WIRING DIAGRAM REF:		
		243211		
- 805	286N2244-303	WIRE BUNDLE ASSY	108120	1
- 806	286N2244-701	WIRE BUNDLE ASSY-	103106	1
810	BACC45FT22-12P	.PLUG-	103106	1
		ELECTRICAL EQUIP NUMBER:	108120	
		D40250P		
		WIRING DIAGRAM REF:		
		243211		
815	BACC45FT12-12P7	.PLUG-	103106	1
		ELECTRICAL EQUIP NUMBER:	108120	
		D40286P		
		WIRING DIAGRAM REF:		
		242311		
- 830	286N2250-318	WIRE BUNDLE ASSY	108120	1
- 831	286N2250-701	WIRE BUNDLE ASSY	103106	1
835	BACC45FT22-32P	.PLUG-	103106	1
		ELECTRICAL EQUIP NUMBER:	108120	
		D40246P		
		WIRING DIAGRAM REF:		
		242811		
- 840	286N2256-303	WIRE BUNDLE ASSY	108120	1
- 841	286N2256-701	WIRE BUNDLE ASSY	103106	1
845	BACC45FT22-32P9	.PLUG-	103106	1
		ELECTRICAL EQUIP NUMBER:	108120	
		D40866P		
		WIRING DIAGRAM REF:		
		303111		
- 850	286N2258-303	WIRE BUNDLE ASSY-	108120	1
- 851	286N2258-701	WIRE BUNDLE ASSY	103106	1
855	BACC45FT24-43P9	.PLUG-	103106	1
		ELECTRICAL EQUIP NUMBER:	108120	
		D40868P		
		WIRING DIAGRAM REF:		
		282211		

MISSING ITEM NUMBERS NOT APPLICABLE

- ITEM NOT ILLUSTRATED

BOEING PROPRIETARY - Copyright © - Unpublished Work - See title page for details.

FIG ITEM	PART NUMBER	1 2 3 4 5 6 7 NOMENCLATURE	EFFECT FROM TO	UNITS PER ASSY
2				
- 860	286N2260-303	WIRE BUNDLE ASSY-	108120	1
- 860	286N2260-701	WIRE BUNDLE ASSY-	103106	1
867	BACC45FT14-15P6	.PLUG-	103106	1
		ELECTRICAL EQUIP NUMBER:	108120	
		D40870P		
		WIRING DIAGRAM REF:		
		260101		
- 870	286N2370-301	WIRE BUNDLE ASSY	108120	1
- 870	286N2370-701	WIRE BUNDLE ASSY-	103106	1
875	BACC45FT12-12P	.CONNECTOR-	103106	1
		ELECTRICAL EQUIP NUMBER:	108120	
		D40300P		
		WIRING DIAGRAM REF:		
		221132		
- 880	286N2700-301	WIRE BUNDLE ASSY	108120	1
885	BACC45FT18-14P8	.PLUG-	108120	1
		ELECTRICAL EQUIP NUMBER:		
		D40168P		
		WIRING DIAGRAM REF:		
		243141		
		252911		

MISSING ITEM NUMBERS NOT APPLICABLE

- ITEM NOT ILLUSTRATED

BOEING PROPRIETARY - Copyright © - Unpublished Work - See title page for details.

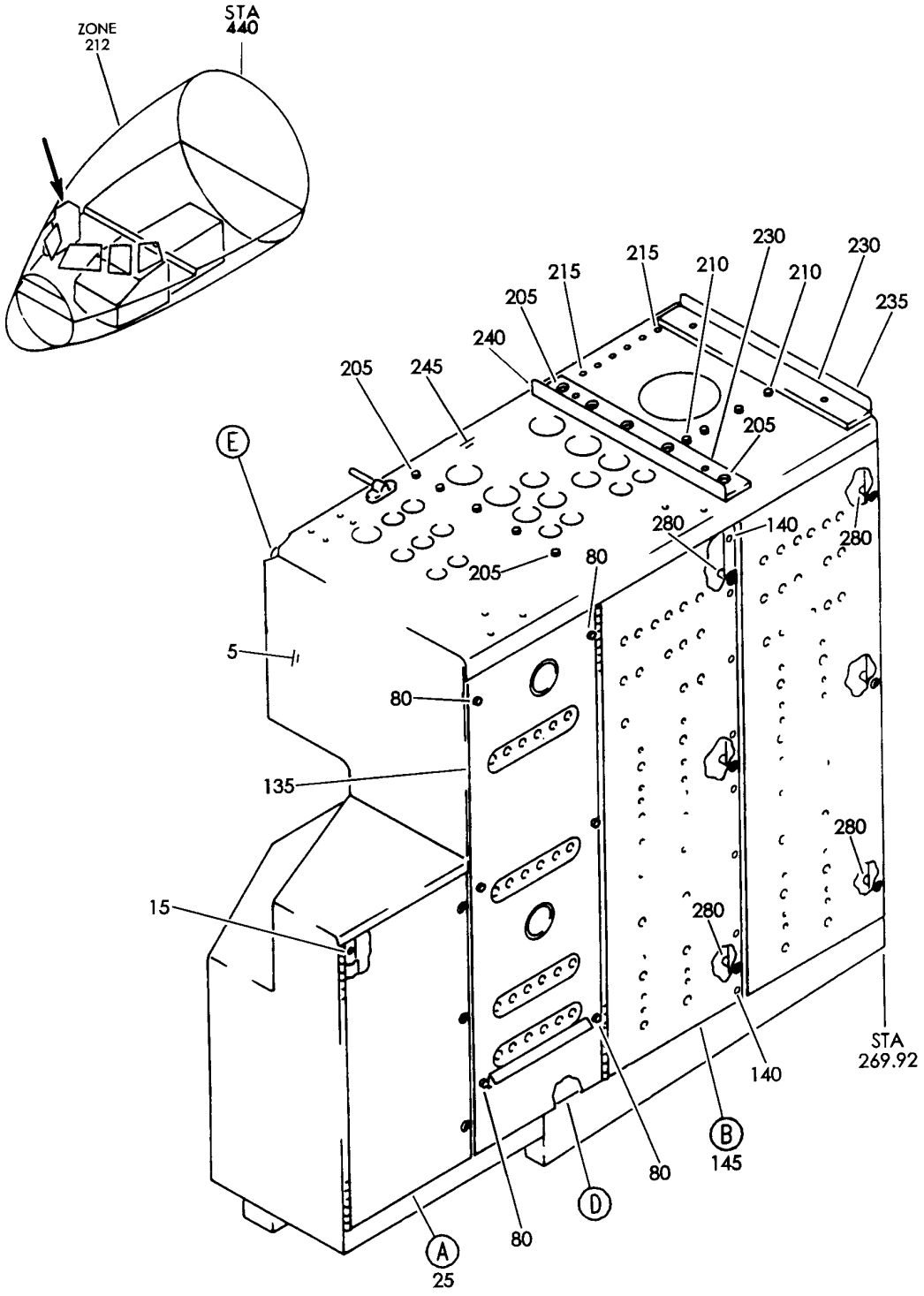

PANEL ASSY AND CIRCUIT BREAKER INSTL-PWR DISTR P6
FIGURE 10 (SHEET 1)

BOEING PROPRIETARY - Copyright © - Unpublished Work - See title page for details.

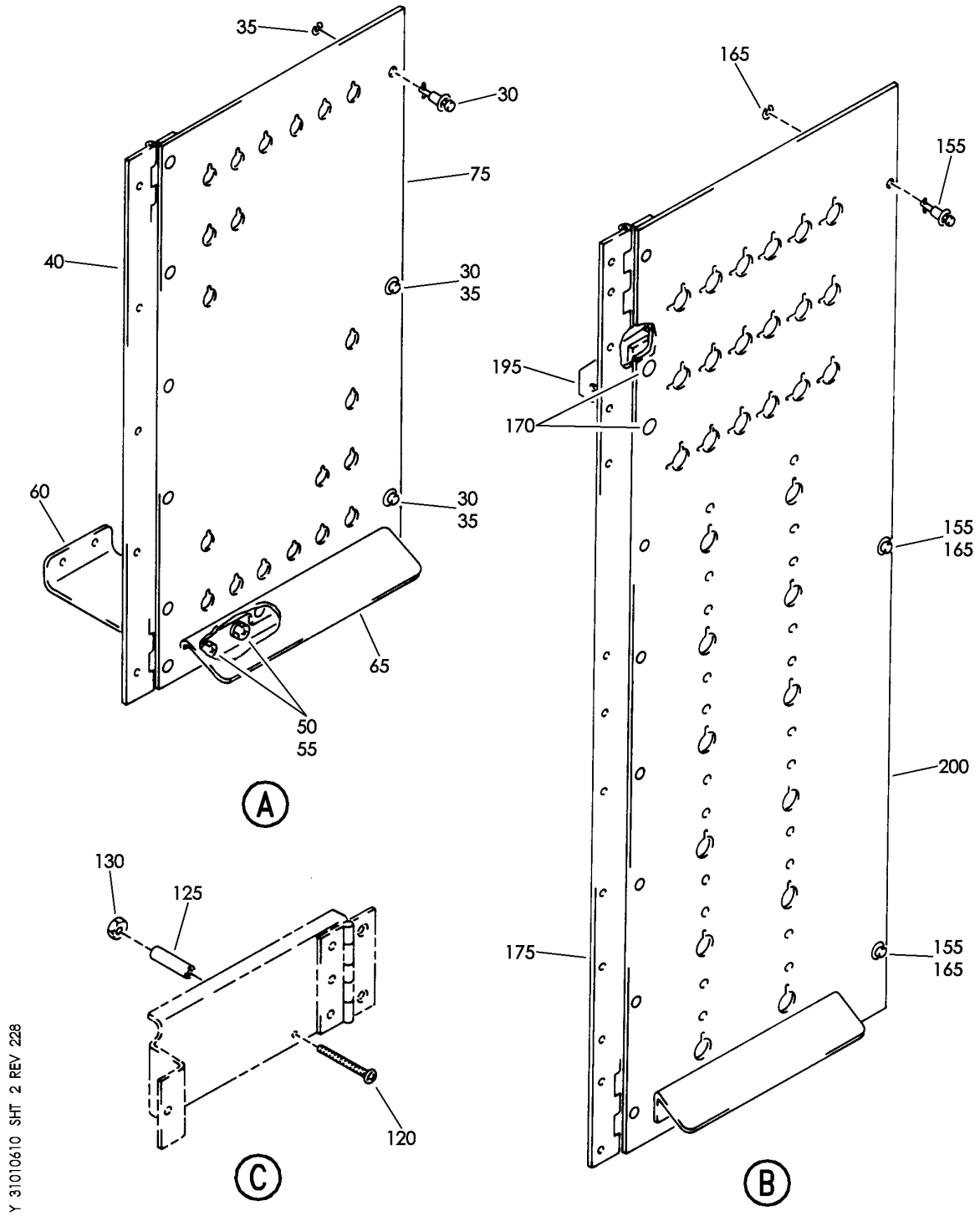

PANEL ASSY AND CIRCUIT BREAKER INSTL-PWR DISTR P6
FIGURE 10 (SHEET 2)

BOEING PROPRIETARY - Copyright © - Unpublished Work - See title page for details.

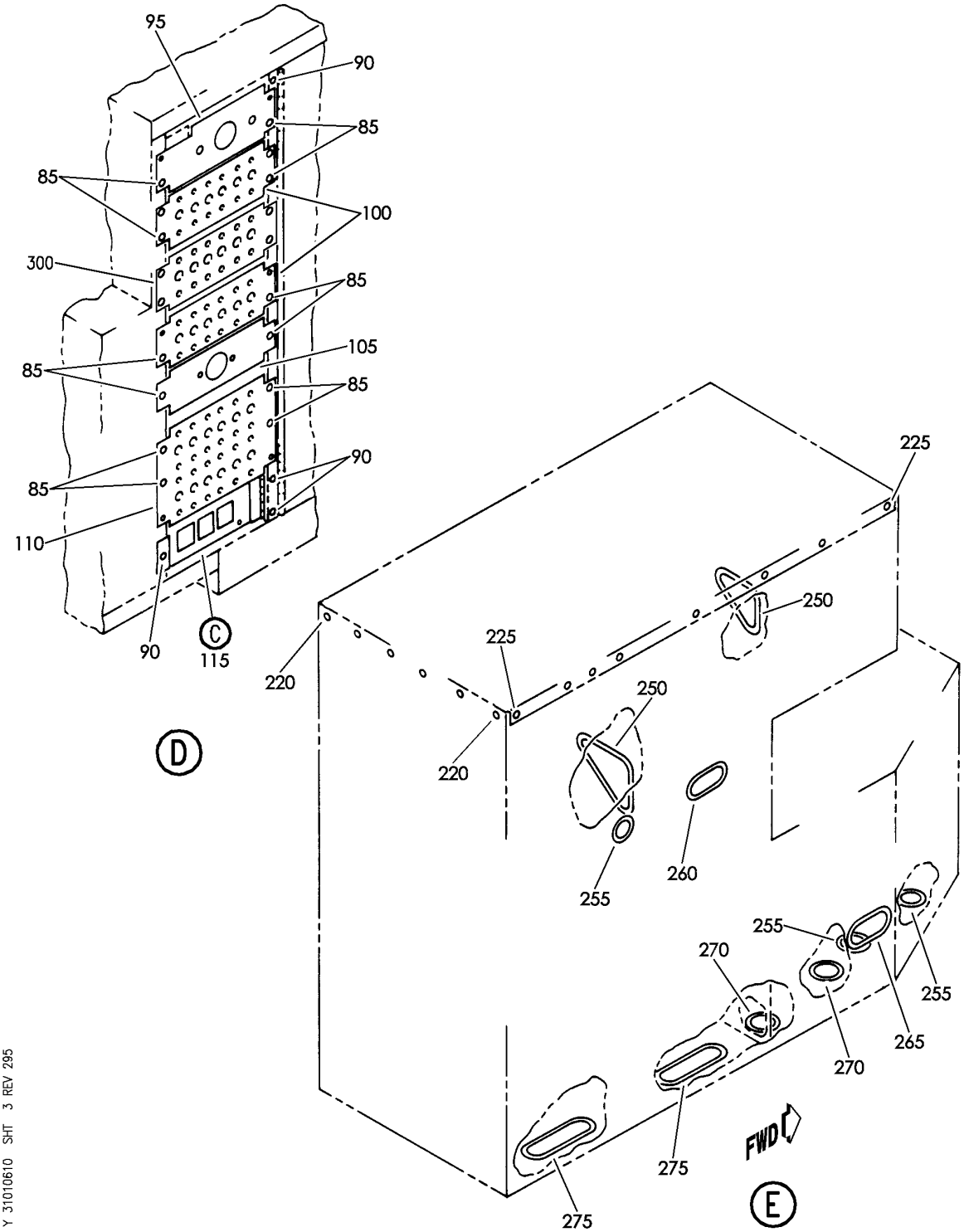

PANEL ASSY AND CIRCUIT BREAKER INSTL-PWR DISTR P6
FIGURE 10 (SHEET 3)

BOEING PROPRIETARY - Copyright © - Unpublished Work - See title page for details.

FIG ITEM	PART NUMBER	1 2 3 4 5 6 7 NOMENCLATURE	EFFECT FROM TO	UNITS PER ASSY
10				
		PANEL ASSY AND CIRCUIT	002004	
		BREAKER INSTL-PWR	006999	
		DISTR P6		
- 1	287N4167-2	PANEL ASSY-PWR DISTR P6	107107	RF
		FOR NHA SEE:		
		25-29-71-03		
- 1	287N4167-3	PANEL ASSY-PWR DISTR P6	002004	RF
		FOR NHA SEE:	006100	
		25-29-71-03	121503	
			904999	
- 1	287N4167-5	PANEL ASSY-PWR DISTR P6	101106	RF
		FOR NHA SEE:	108120	
		25-29-71-03	504903	
		31-01-06-02		
5	287N4171-2	.PANEL ASSY-	107107	1
		POSITION DATA:		
		TOP AND BACK		
5	287N4171-16	.PANEL ASSY-	002004	1
		POSITION DATA:	006106	
		TOP AND BACK	108999	
		ATTACHING PARTS		
- 10	NAS1801-06-8	.SCREW	002004	17
			006999	
		-------*-------		
15	NAS514P1032-7	.SCREW	002004	5
			006999	
25	287N4178-1	.DOOR ASSY-	107107	1
		POSITION DATA:		
		LH		
25	287N4178-13	.DOOR ASSY-	002004	1
		POSITION DATA:	006106	
		LH	108999	
30	BACS21Y5R	..STUD ASSY-	002004	3
			006999	
35	1127722	..WASHER-	002004	3
		SUPPLIER CODE:	006999	
		V60119		
		SPECIFICATION NUMBER:		
		BACW10X2		
		OPTIONAL PART:		
		2600SW		
		V71286		
40	287N4178-3	..HINGE-DOOR	107107	1
40	287N4178-12	..HINGE-DOOR	002004	1
			006106	
			108999	
		ATTACHING PARTS		
- 45	BACR15BB5AD5	..RIVET	107107	6

MISSING ITEM NUMBERS NOT APPLICABLE

- ITEM NOT ILLUSTRATED

BOEING PROPRIETARY - Copyright © - Unpublished Work - See title page for details.

FIG ITEM	PART NUMBER	1 2 3 4 5 6 7 NOMENCLATURE	EFFECT FROM TO	UNITS PER ASSY
10				
- 45	BACR15BB5AD3	..RIVET	002004 006106 108999	6
		-------*-------		
50	NAS1801-3-8	..SCREW	002004 006999	2
55	AN960JD10	..WASHER	002004 006999	2
60	287N4178-4	..SUPPORT ASSY	107107	1
60	287N4178-14	..SUPPORT ASSY	002004 006106 108999	1
65	287N4178-6	..PROTECTOR-CB	002004 006999	1
		ATTACHING PARTS		
- 70	BACR15FR5B5	..RIVET	107107	3
- 70	BSC54	..RIVET- SUPPLIER CODE: V05693	002004 006106 108999	3
		-------*-------		
75	287N4178-2	..PANEL ASSY	107107	1
75	287N4178-10	..PANEL ASSY	002004 006106 108999	1
80	NAS1801-3-8	.SCREW	002004 006999	6
85	NAS514P1032-8	.SCREW	002004 006999	14
90	NAS514P632-8	.SCREW	002004 006999	4
95	287N4177-6	.CHANNEL	002004 006100 107107 121503 904999	1
100	287N4177-3	.CHANNEL	002004 006999	2
105	287N4177-5	.CHANNEL	002004 006100 107107 121503 904999	1
110	287N4177-4	.CHANNEL	002004 006999	1
115	287N4176-9	.MOUNT ASSY-RELAY	107107	1
115	287N4176-21	.MOUNT ASSY-RELAY	002004 006106 108999	1

MISSING ITEM NUMBERS NOT APPLICABLE

- ITEM NOT ILLUSTRATED

BOEING PROPRIETARY - Copyright © - Unpublished Work - See title page for details.

FIG ITEM	PART NUMBER	1 2 3 4 5 6 7 NOMENCLATURE	EFFECT FROM TO	UNITS PER ASSY
10				
120	NAS603-24P	..SCREW	002004 006999	1
125	NAS43DD3-64	..SPACER	002004 006999	1
130	BRH10A3	..NUT SUPPLIER CODE: V52828 SPECIFICATION NUMBER: BACN10JC3 OPTIONAL PART: H10-3BAC V15653 NS202101-02 V80539 RMLH9075-3W V72962 VN303A02 V92215 96-02 V80539 T6S1032J V11815	002004 006999	1
135	287N4177-1	.DOOR ASSY- POSITION DATA: RH	107107	1
135	287N4177-11	.DOOR ASSY- POSITION DATA: RH	002004 006100 121503 904999	1
140	NAS514P1032-7	.SCREW	002004 006999	8
145	287N4176-1	.DOOR ASSY- POSITION DATA: LH	107107	1
145	287N4176-18	.DOOR ASSY- POSITION DATA: LH	002004 006106 108999	1
- 150	287N4176-2	.DOOR ASSY- POSITION DATA: RH	107107	1
- 150	287N4176-19	.DOOR ASSY- POSITION DATA: RH	002004 006106 108999	1
155	BACS21Y6R	..STUD ASSY- POSITION DATA: LH SIDE	107107	3
155	BACS21Y4R	..STUD ASSY- POSITION DATA: LH SIDE	002004 006106 108999	3

MISSING ITEM NUMBERS NOT APPLICABLE

- ITEM NOT ILLUSTRATED

BOEING PROPRIETARY - Copyright © - Unpublished Work - See title page for details.

FIG ITEM	PART NUMBER	1 2 3 4 5 6 7 NOMENCLATURE	EFFECT FROM TO	UNITS PER ASSY
10				
- 160	BACS21Y3R	..STUD ASSY-	002004	3
		POSITION DATA:	006106	
		RH SIDE	108999	
165	1127722	..WASHER	002004	3
		SUPPLIER CODE:	006999	
		V60119		
		SPECIFICATION NUMBER:		
		BACW10X2		
		OPTIONAL PART:		
		2600SW		
		V71286		
170	NAS1801-3-7	..SCREW	002004	2
			006999	
175	287N4176-7	..HINGE-	107107	1
		POSITION DATA:		
		LH SIDE		
175	287N4176-16	..HINGE-	002004	1
		POSITION DATA:	006106	
		LH SIDE	108999	
		ATTACHING PARTS		
- 180	BACR15FR5B2	..RIVET	107107	7
- 180	BSL54	..RIVET-	002004	7
		SUPPLIER CODE:	006106	
		V05693	108999	
		-------*-------		
- 185	287N4176-8	..HINGE-	107107	1
		POSITION DATA:		
		RH SIDE		
- 185	287N4176-17	..HINGE-	002004	1
		POSITION DATA:	006106	
		RH SIDE	108999	
		ATTACHING PARTS		
- 190	BACR15FR5B2	..RIVET	107107	7
- 190	BSL54	..RIVET-	002004	7
		SUPPLIER CODE:	006106	
		V05693	108999	
		-------*-------		
195	287N4176-4	..SUPPORT ASSY	107107	1
195	287N4176-20	..SUPPORT ASSY	002004	1
			006106	
			108999	
200	287N4176-3	..PANEL ASSY	107107	1
200	287N4176-14	..PANEL ASSY	002004	1
			006106	
			108999	
205	NAS1801-06-8	.SCREW	107107	10
210	NAS1801-06-6	.SCREW	107107	4
215	BACR15FP5B3	.RIVET	107107	6
220	NAS514P1032-7	.SCREW	107107	6

MISSING ITEM NUMBERS NOT APPLICABLE

- ITEM NOT ILLUSTRATED

BOEING PROPRIETARY - Copyright © - Unpublished Work - See title page for details.

FIG ITEM	PART NUMBER	1 2 3 4 5 6 7 NOMENCLATURE	EFFECT FROM TO	UNITS PER ASSY
10				
225	NAS1801-3-7	.SCREW	107107	8
230	287N4169-14	.SPACER	002004 006999	2
235	287N4174-17	.ANGLE	002004 006999	1
240	287N4174-26	.ANGLE	002004 006999	1
245	287N4169-1	.PANEL ASSY- POSITION DATA: TOP	107107	1
245	287N4169-15	.PANEL ASSY- POSITION DATA: TOP	002004 006106 108999	1
250	BACG20ZC914	.GROMMET	002004 006999	2
255	BACG20ZC314	.GROMMET	002004 006999	3
260	BACG20ZC564	.GROMMET	002004 006999	1
265	BACG20ZC643	.GROMMET	002004 006999	1
270	BACG20ZC393	.GROMMET	002004 006999	2
275	BACG20ZC926	.GROMMET	002004 006999	2
280	BACR11Y2	.RECEPTACLE-	002004 006999	6

MISSING ITEM NUMBERS NOT APPLICABLE

– ITEM NOT ILLUSTRATED

BOEING PROPRIETARY - Copyright © - Unpublished Work - See title page for details.

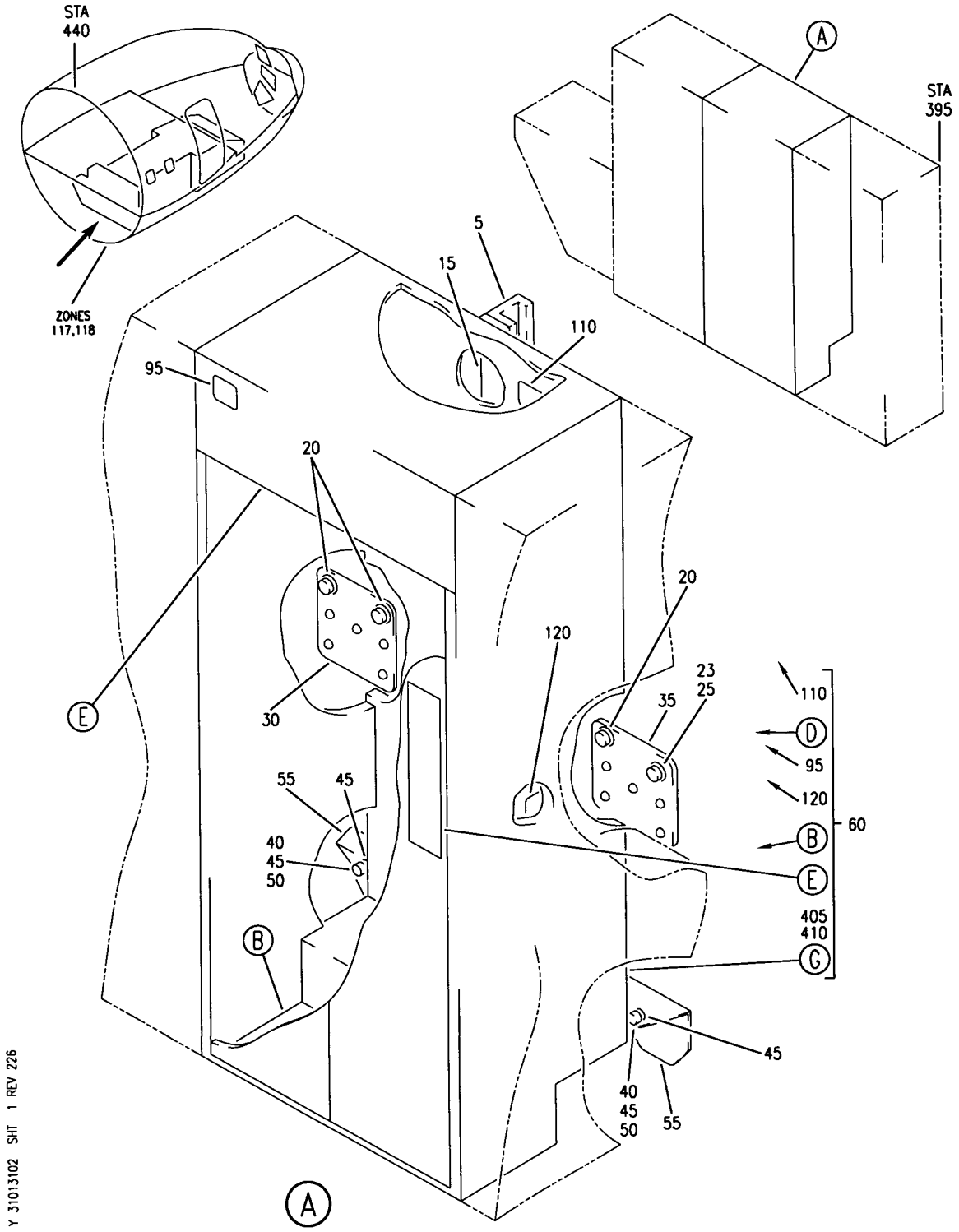

PANEL INSTL-P31, P32 AND P34 PWR (LEFT GENERATOR POWER PANELS ONLY)
FIGURE 2 (SHEET 1)

BOEING PROPRIETARY - Copyright © - Unpublished Work - See title page for details.

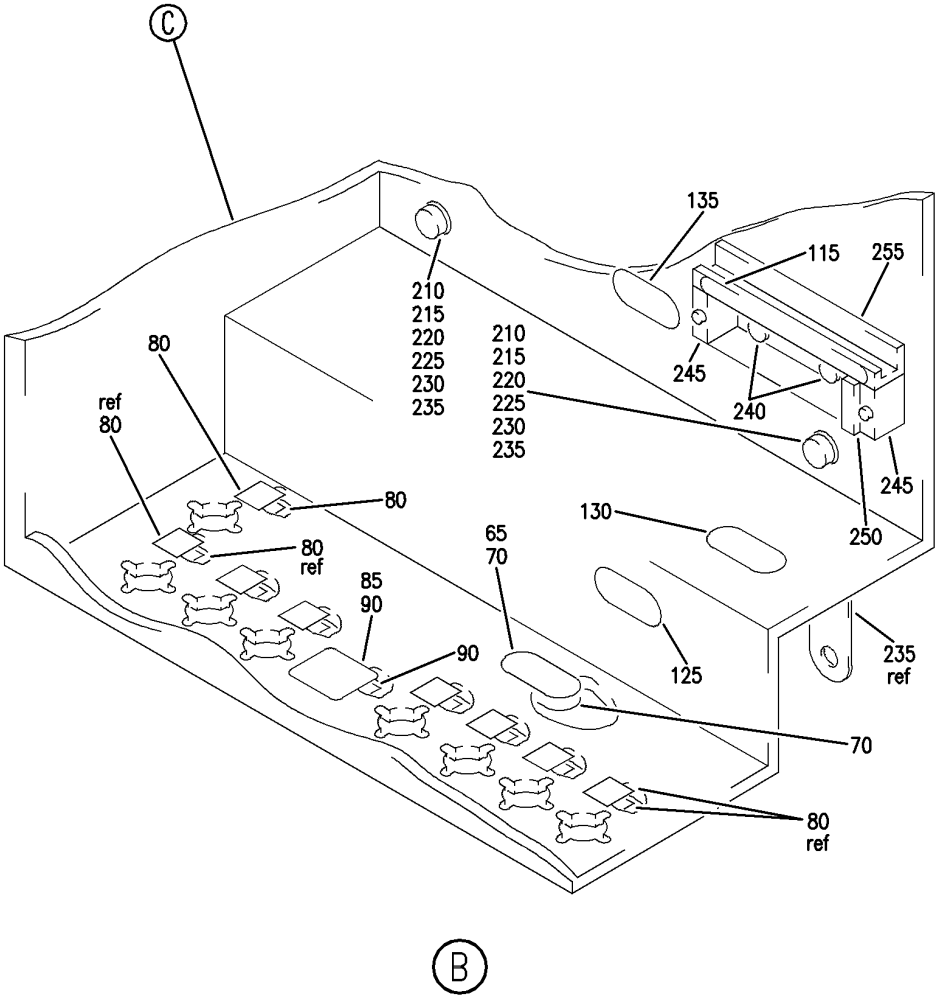

Y 31013102 SHT 2 REV 226

PANEL INSTL-P31, P32 AND P34 PWR (LEFT GENERATOR POWER PANELS ONLY)
FIGURE 2 (SHEET 2)

BOEING PROPRIETARY - Copyright © - Unpublished Work - See title page for details.

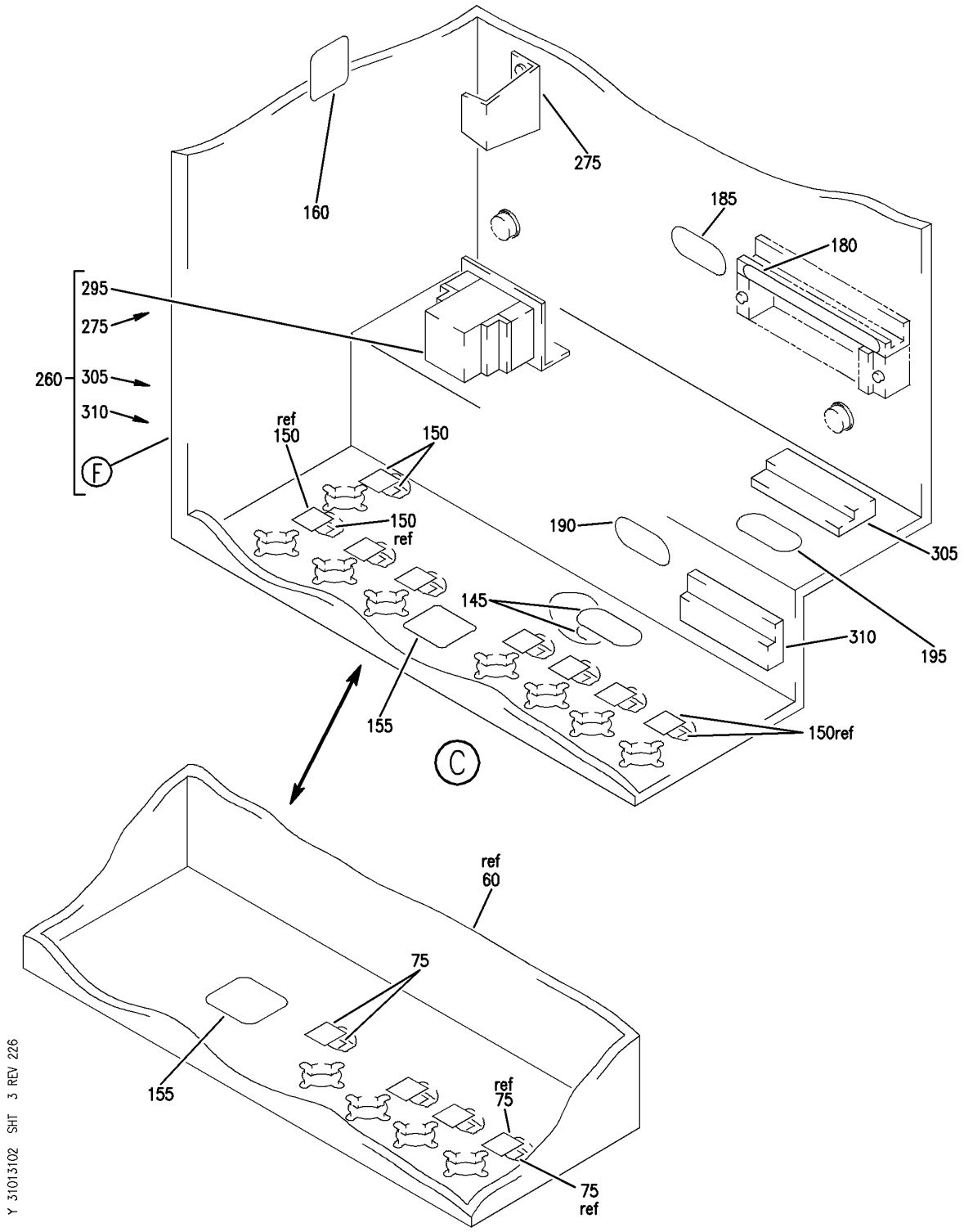

PANEL INSTL-P31, P32 AND P34 PWR (LEFT GENERATOR POWER PANELS ONLY)
FIGURE 2 (SHEET 3)

BOEING PROPRIETARY - Copyright © - Unpublished Work - See title page for details.

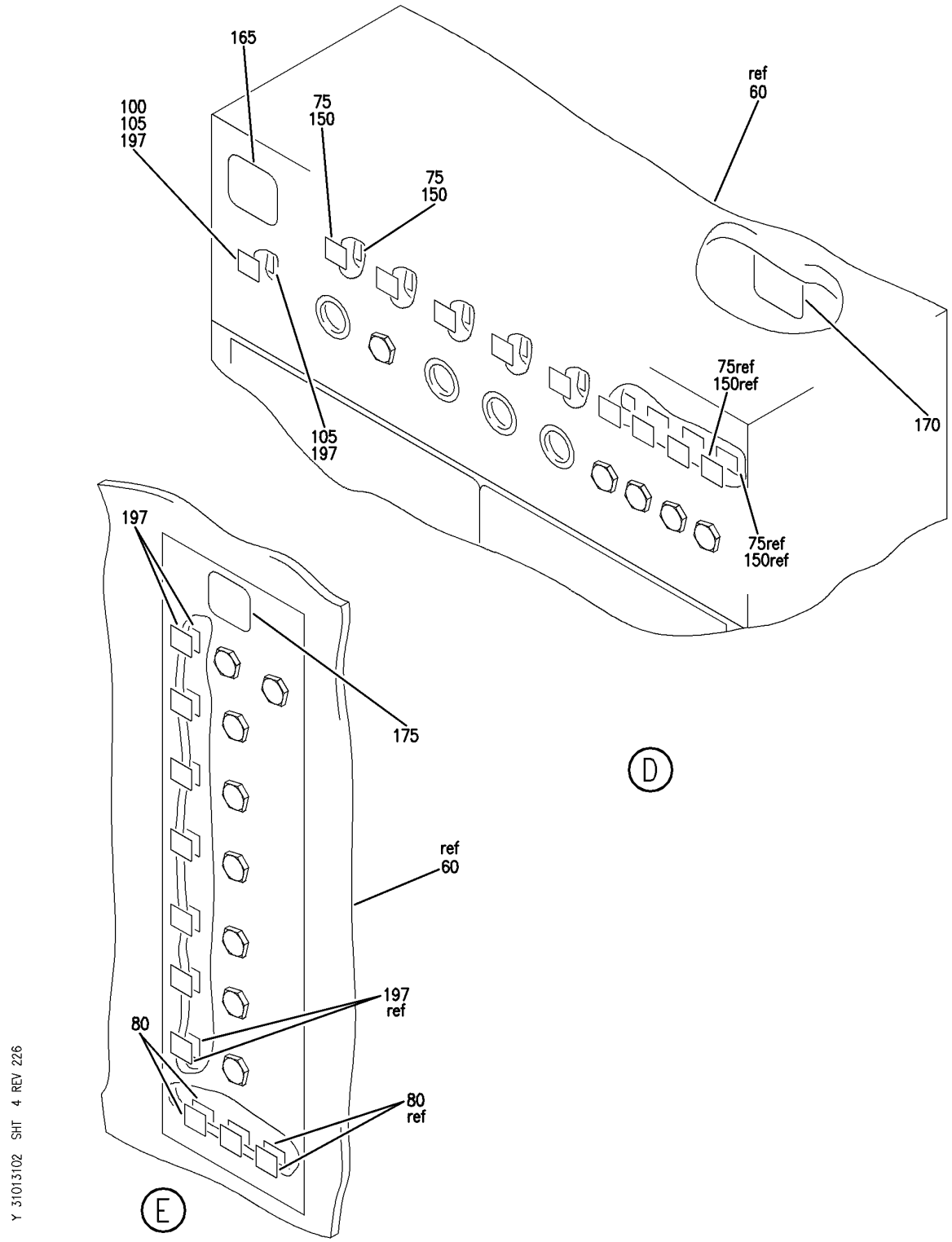

PANEL INSTL-P31, P32 AND P34 PWR (LEFT GENERATOR POWER PANELS ONLY)
FIGURE 2 (SHEET 4)

BOEING PROPRIETARY - Copyright © - Unpublished Work - See title page for details.

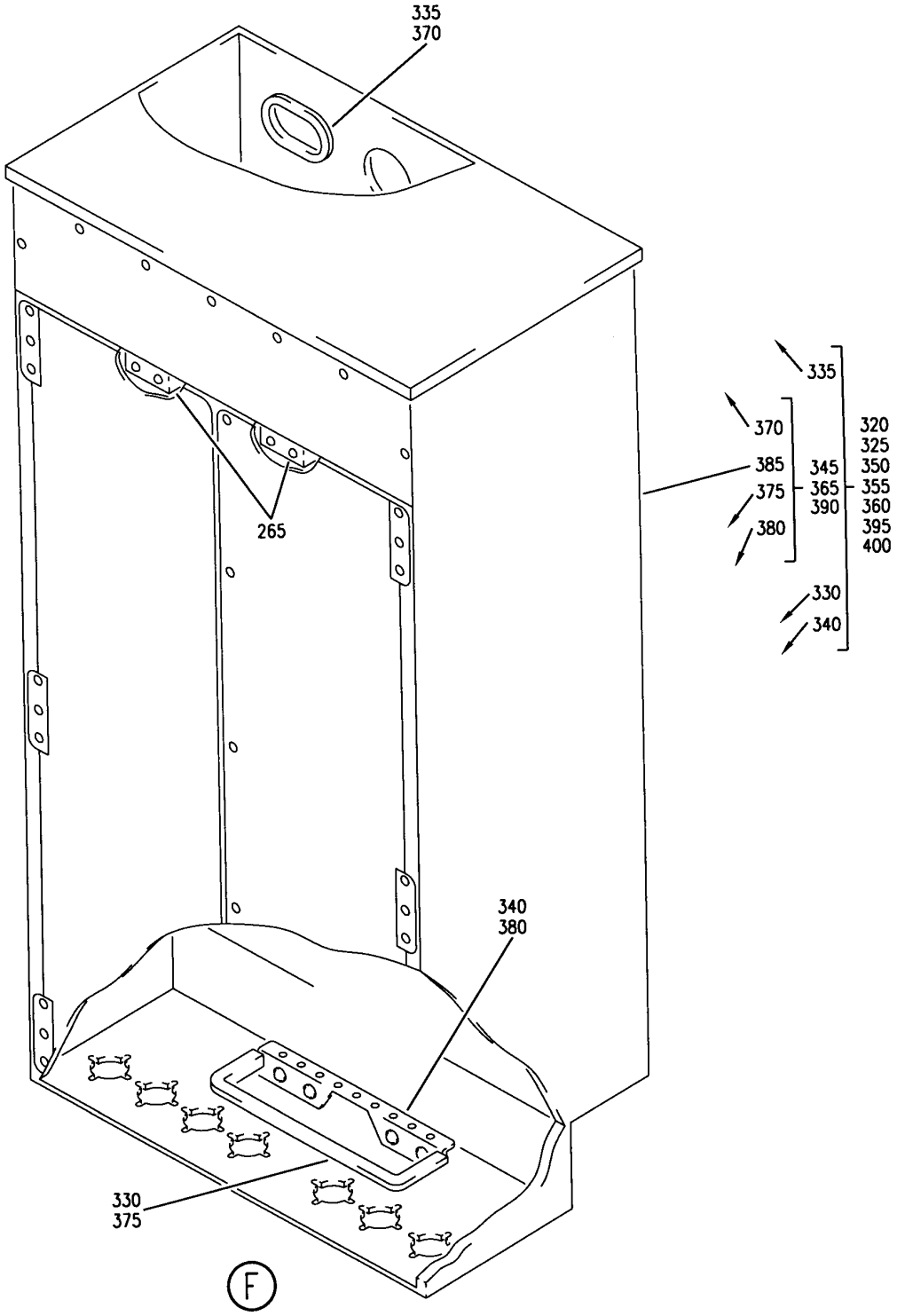

Y 31013102 SHT 5 REV 226

PANEL INSTL-P31, P32 AND P34 PWR (LEFT GENERATOR POWER PANELS ONLY)
FIGURE 2 (SHEET 5)

BOEING PROPRIETARY - Copyright © - Unpublished Work - See title page for details.

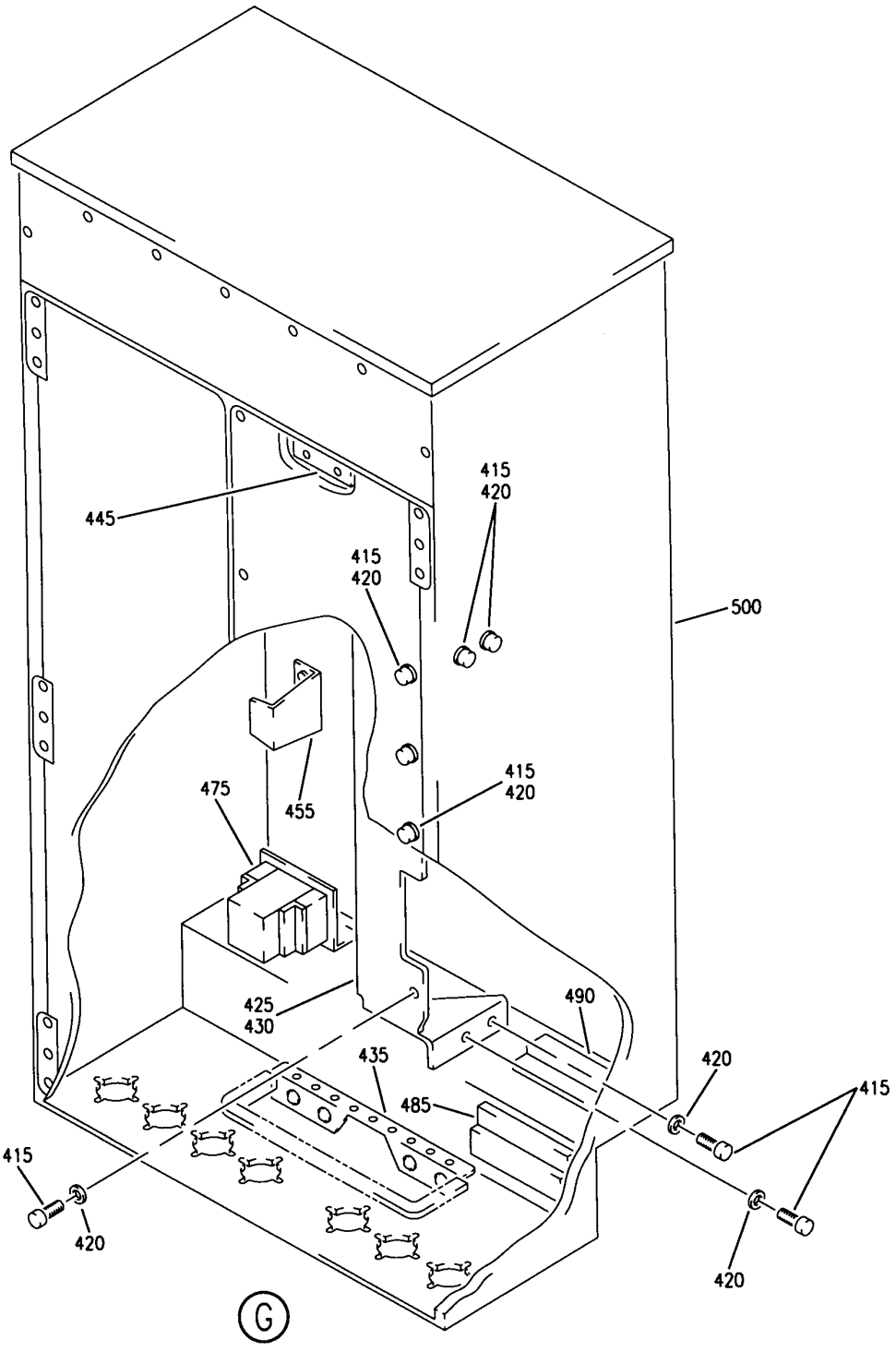

Y 31013102 SHT 6 REV 226

PANEL INSTL-P31, P32 AND P34 PWR (LEFT GENERATOR POWER PANELS ONLY)
FIGURE 2 (SHEET 6)

BOEING PROPRIETARY - Copyright © - Unpublished Work - See title page for details.

FIG ITEM	PART NUMBER	1 2 3 4 5 6 7 NOMENCLATURE	EFFECT FROM TO	UNITS PER ASSY
2		PANEL INSTL-P31, P32 AND P34 PWR (LEFT GENERATOR POWER PANELS ONLY)	002004 006100 107107 121503 904999	
- 1	284N1317-6	PANEL INSTL-P31, P32 AND P34 PWR (LEFT GENERATOR POWER PANELS ONLY) FOR NHA/ADDITIONAL DET SEE: 24-00-58-01C	107107	RF
- 1	284N1317-7	PANEL INSTL-P31, P32 AND P34 PWR (LEFT GENERATOR POWER PANELS ONLY) FOR NHA/ADDITIONAL DET SEE: 24-00-58-01C	904949	RF
- 1	284N1317-8	PANEL INSTL-P31, P32 AND P34 PWR (LEFT GENERATOR POWER PANELS ONLY) FOR NHA/ADDITIONAL DET SEE: 24-00-58-01C	002004 006007 121503 952999	RF
- 1	284N1317-9	PANEL INSTL-P31, P32 AND P34 PWR (LEFT GENERATOR POWER PANELS ONLY) FOR NHA/ADDITIONAL DET SEE: 24-00-58-01C	008100 950951	RF
5	284N1365-56	.BRACKET ASSY	002004 006100 107107 121503 904999	1
		ATTACHING PARTS		
- 10	L8055	.BOLT- SUPPLIER CODE: V06725 SPECIFICATION NUMBER: BACB30FM5 OPTIONAL PART: HL18-5 V06725 SIZE DETERMINED ON INSTL. -------*-------	002004 006100 107107 121503 904999	3
15	284N1330-1	.SPACER	107107 904949	1
15	284N1330-3	.SPACER	002004 006100 121503 950999	1

MISSING ITEM NUMBERS NOT APPLICABLE

- ITEM NOT ILLUSTRATED

BOEING PROPRIETARY - Copyright © - Unpublished Work - See title page for details.

FIG ITEM	PART NUMBER	1 2 3 4 5 6 7 NOMENCLATURE	EFFECT FROM TO	UNITS PER ASSY
2				
20	NAS6604-2	.BOLT	002004 006100 107107 121503 904999	3
23	NAS6604-1	.BOLT	002004 006100 107107 121503 904999	1
30	284N1365-3	.BRACKET ASSY	002004 006100 107107 121503 904999	1
35	284N1365-3	.BRACKET ASSY	107107	1
35	284N1365-61	.BRACKET ASSY	002004 006100 121503 904999	1
40	NAS1801-4-15	.SCREW	002004 006100 121503 904999	2
45	BACB30NE4-10	.BOLT	107107	2
50	AN960-416L	.WASHER	002004 006100 121503 904999	4
55	284N1365-37	.BRACKET ASSY-	107107	2
55	284N1365-62	.BRACKET ASSY	002004 006100 121503 904999	2

MISSING ITEM NUMBERS NOT APPLICABLE

– ITEM NOT ILLUSTRATED

BOEING PROPRIETARY - Copyright © - Unpublished Work - See title page for details.

FIG ITEM	PART NUMBER	1 2 3 4 5 6 7 NOMENCLATURE	EFFECT FROM TO	UNITS PER ASSY
2				
60	284N1314-1	.EQUIPMENT ASSY-L GEN PWR PNL P31 VARIABLE DRAWING REF: 284N1314-5010 284N1314-5011 284N1314-5017 284N1314-5022 FUNCTIONAL REFERENCE: PLACARDS AND MARKINGS FOR DETAILS SEE 11-36-05-02 ELECTRICAL POWER FOR DETAILS SEE 24-22-03-03 24-23-01-01 24-51-55-01B EQUIPMENT/FURNISHINGS FOR DETAILS SEE 25-31-03-01 HYDRAULIC POWER FOR DETAILS SEE 29-11-67-01	002004 006100 107107 121503 904999	1
70	BAC27NEX0653	..DECAL- PLACARD CONTENT: AP0031	002004 006100 107107 121503 904999	2
80	BAC27NEX0938	..DECAL	002004 006100 107107 121503 904999	4
90	BAC27NEX0176	..DECAL- PLACARD CONTENT: D	002004 006100 107107 121503 904999	2
95	BAC27NEX0173	..DECAL- PLACARD CONTENT: A	002004 006100 107107 121503 904999	1
105	BAC27TEX0105	..DECAL	002004 006100 107107 121503 904999	2

MISSING ITEM NUMBERS NOT APPLICABLE

– ITEM NOT ILLUSTRATED

BOEING PROPRIETARY - Copyright © - Unpublished Work - See title page for details.

FIG ITEM	PART NUMBER	1 2 3 4 5 6 7 NOMENCLATURE	EFFECT FROM TO	UNITS PER ASSY
2				
110	BAC27NEX0174	..DECAL- PLACARD CONTENT: B	002004 006100 107107 121503 904999	1
115	BAC27TEX0384	..DECAL- PLACARD CONTENT: 1 THRU 30	002004 006100 107107 121503 904999	1
120	BAC27NEX0175	..DECAL- PLACARD CONTENT: C	002004 006100 107107 121503 904999	1
125	BAC27NEX0652	..DECAL- PLACARD CONTENT: GD531	002004 006100 107107 121503 904999	1
130	BAC27NEX1601	..DECAL- PLACARD CONTENT: GD2340	002004 006100 107107 121503 904999	1
135	BAC27NEX0650	..DECAL- PLACARD CONTENT: TB131	002004 006100 107107 121503 904999	1
197	BAC27NEX0174	...DECAL	002004 006100 107107 121503 904999	4
- 200	D2859PB	..PLUG- SUPPLIER CODE: V57771 SPECIFICATION NUMBER: BACP20B44 MISCELLANEOUS DATA: USE IN PLACE OF CIRCUIT BREAKERS ON OPEN HOLES OPTIONAL PART: BACP20B43B	121503 904949	2

MISSING ITEM NUMBERS NOT APPLICABLE

- ITEM NOT ILLUSTRATED

BOEING PROPRIETARY - Copyright © - Unpublished Work - See title page for details.

FIG ITEM	PART NUMBER	1 2 3 4 5 6 7 NOMENCLATURE	EFFECT FROM TO	UNITS PER ASSY
2				
- 200	BACP20B43B	..PLUG-	121503	2
		MISCELLANEOUS DATA:	904949	
		USE IN PLACE OF CIRCUIT		
		BREAKERS ON OPEN HOLES		
		OPTIONAL PART:		
		BACP20B44		
- 205	D2859PB	..PLUG-	002004	3
		SUPPLIER CODE:	006010	
		V57771	107107	
		SPECIFICATION NUMBER:	950999	
		BACP20B44		
		MISCELLANEOUS DATA:		
		USE IN PLACE OF CIRCUIT		
		BREAKERS ON OPEN HOLES		
		OPTIONAL PART:		
		BACP20B43B		
- 205	BACP20B43B	..PLUG-	002004	3
		MISCELLANEOUS DATA:	006010	
		USE IN PLACE OF CIRCUIT	107107	
		BREAKERS ON OPEN HOLES	950999	
		OPTIONAL PART:		
		BACP20B44		

MISSING ITEM NUMBERS NOT APPLICABLE

- ITEM NOT ILLUSTRATED

BOEING PROPRIETARY - Copyright © - Unpublished Work - See title page for details.

FIG ITEM	PART NUMBER	1 2 3 4 5 6 7 NOMENCLATURE	EFFECT FROM TO	UNITS PER ASSY
2				
210	HL1050PB12-5	..BOLT	002004	2
		SUPPLIER CODE:	006100	
		V97928	107107	
		SPECIFICATION NUMBER:	121503	
		BACB30MB12-5	904999	
		OPTIONAL PART:		
		HL20PB12-5		
		V73197		
		HL20PB12-5		
		V92215		
		HL20PB12-5		
		V97928		
		69307-12-5		
		V56878		
		HL20PB12-5		
		V80539		
		L80612-5		
		V06725		
		HL20PB12-5		
		V60516		
		HL20PB12-5		
		V08524		
		HL20-12-5		
		V06725		
		HL20PB12-5		
		V56878		
		WC80612-5		
		V60516		
		HL1050PB12-5		
		V56878		
		HL1050PB12-5		
		V60516		
		HL1050PB12-5		
		V73197		
		HL1050PB12-5		
		V80539		
215	AN960-616	..WASHER	002004	2
			006010	
			107107	
			121503	
			904999	
215	NAS1149D0663J	..WASHER	011100	2
220	BACW10CT12	..WASHER	002004	2
			006100	
			107107	
			121503	
			904999	

MISSING ITEM NUMBERS NOT APPLICABLE

– ITEM NOT ILLUSTRATED

BOEING PROPRIETARY - Copyright © - Unpublished Work - See title page for details.

FIG ITEM	PART NUMBER	1 2 3 4 5 6 7 NOMENCLATURE	EFFECT FROM TO	UNITS PER ASSY
2				
225	AN960PD616L	..WASHER	002004 006010 950999	2
225	AN960JD616L	..WASHER	107107 121503 904949	2
225	NAS1149D0616J	..WASHER	011100	2
230	MS21042L6	..NUT	002004 006100 107107 121503 904999	2
235	RBEJ40E22-48	..JUMPER ASSY SUPPLIER CODE: V1GK47 SPECIFICATION NUMBER: BACJ40E22-48 OPTIONAL PART: 740E22-48 V91812	002004 006100 107107 121503 904999	2
240	NAS1801-3-8	..SCREW	002004 006100 107107 121503 904999	2
245	BACC49A1	..CLAMP SUPPLIER CODE: V09922 SPECIFICATION NUMBER: BACC49A1 OPTIONAL PART: FAB278 V15805 H28-1 V34941 UP103 V6E102	107107 121503 904949	2
245	H49-2	..CLAMP SUPPLIER CODE: V34941 SPECIFICATION NUMBER: BACC49A2 OPTIONAL PART: MF104-2 V6E102	002004 006100 950999	2

MISSING ITEM NUMBERS NOT APPLICABLE

– ITEM NOT ILLUSTRATED

BOEING PROPRIETARY - Copyright © - Unpublished Work - See title page for details.

FIG ITEM	PART NUMBER	1 2 3 4 5 6 7 NOMENCLATURE	EFFECT FROM TO	UNITS PER ASSY
2				
255	AMY0580T3	..TRACK SUPPLIER CODE: V09922 SPECIFICATION NUMBER: BACT44A0580D	002004 006100 107107 950999	1
255	AMY0580T4	..TRACK SUPPLIER CODE: V09922 SPECIFICATION NUMBER: BACT44B0580D	121503 904949	1
260	284N1314-8	..ENCLOSURE ASSY	002004 006100 107107 121503 904999	1
265	284N1314-3	...CLIP ASSY	002004 006100 107107 121503 904999	2
		ATTACHING PARTS		
- 270	BACR15BA5AD	...RIVET- SIZE DETERMINED ON INSTL.	002004 006100 107107 121503 904999	4
		-------*-------		
275	284N1365-29	...BRACKET	002004 006100 107107 121503 904999	1
		ATTACHING PARTS		
- 280	NAS1801-3-8	...SCREW	002004 006100 107107 121503 904999	2
		-------*-------		
- 285	284N1373-134	...BRACKET-RELAY	002004 006100 107107 121503 904999	1

MISSING ITEM NUMBERS NOT APPLICABLE

- ITEM NOT ILLUSTRATED

BOEING PROPRIETARY - Copyright © - Unpublished Work - See title page for details.

FIG ITEM	PART NUMBER	1 2 3 4 5 6 7 NOMENCLATURE	EFFECT FROM TO	UNITS PER ASSY
2				
		ATTACHING PARTS		
- 290	BACR15BB5A	...RIVET-	002004	3
		SIZE DETERMINED ON INSTL.	006100	
			107107	
			121503	
			904999	
		-------*-------		
305	YHLZG16-2	...BLOCK-GND	002004	1
		SUPPLIER CODE:	006100	
		V09922	107107	
		ELECTRICAL EQUIP NUMBER:	121503	
		GD2340	904999	
310	YHLZG16-1	...BLOCK-GND	002004	1
		SUPPLIER CODE:	006100	
		V09922	107107	
		ELECTRICAL EQUIP NUMBER:	121503	
		GD0531	904999	
		ATTACHING PARTS		
- 315	BACR15BB5A	...RIVET-	002004	8
		SIZE DETERMINED ON INSTL.	006100	
			107107	
			121503	
			904999	
		-------*-------		
400	13411000-4	...ENCLOSURE ASSY-	002004	1
		SUPPLIER CODE:	006100	
		V23296	107107	
			121503	
			904999	
- 505	286N1136-001	..WIRE BUNDLE ASSY-	107107	1
			121503	
			904949	
- 515	286N1136-003	..WIRE BUNDLE ASSY	002004	1
			006100	
			950999	
- 530	YHLZD33	...TERMINAL-	002004	1
		SUPPLIER CODE:	006100	
		V09922	107107	
		ELECTRICAL EQUIP NUMBER:	121503	
		TB0131A	904999	
		WIRING DIAGRAM REF:		
		242212		
- 545	YHLZR25	...RESISTOR-	002004	1
		SUPPLIER CODE:	006100	
		V09922		
		ELECTRICAL EQUIP NUMBER:		
		TB0131B		
		WIRING DIAGRAM REF:		
		253133		

MISSING ITEM NUMBERS NOT APPLICABLE

- ITEM NOT ILLUSTRATED

BOEING PROPRIETARY - Copyright © - Unpublished Work - See title page for details.

FIG ITEM	PART NUMBER	1 2 3 4 5 6 7 NOMENCLATURE	EFFECT FROM TO	UNITS PER ASSY
2				
- 550	YHLZR27	...COMPONENT-	952999	1
		SUPPLIER CODE:		
		V09922		
		ELECTRICAL EQUIP NUMBER:		
		TB0131B		
		WIRING DIAGRAM REF:		
		253133		
- 560	YHLZ16-2	...MODULE-	002004	1
		SUPPLIER CODE:	006100	
		V09922	107107	
		SPECIFICATION NUMBER:	121503	
		BACM15C3A	904999	
		OPTIONAL PART:		
		TBH120450		
		V58982		
		421120-450		
		V58982		
		ELECTRICAL EQUIP NUMBER:		
		TB0131X		
		WIRING DIAGRAM REF:		
		291132		
- 565	YHLZ16-4	...MODULE-	002004	1
		SUPPLIER CODE:	006100	
		V09922	107107	
		SPECIFICATION NUMBER:	121503	
		BACM15C3B	904999	
		OPTIONAL PART:		
		421120-452		
		V58982		
		TBH120452		
		V58982		
		ELECTRICAL EQUIP NUMBER:		
		TB0131Y		
		WIRING DIAGRAM REF:		
		242212		

MISSING ITEM NUMBERS NOT APPLICABLE

- ITEM NOT ILLUSTRATED

BOEING PROPRIETARY - Copyright © - Unpublished Work - See title page for details.

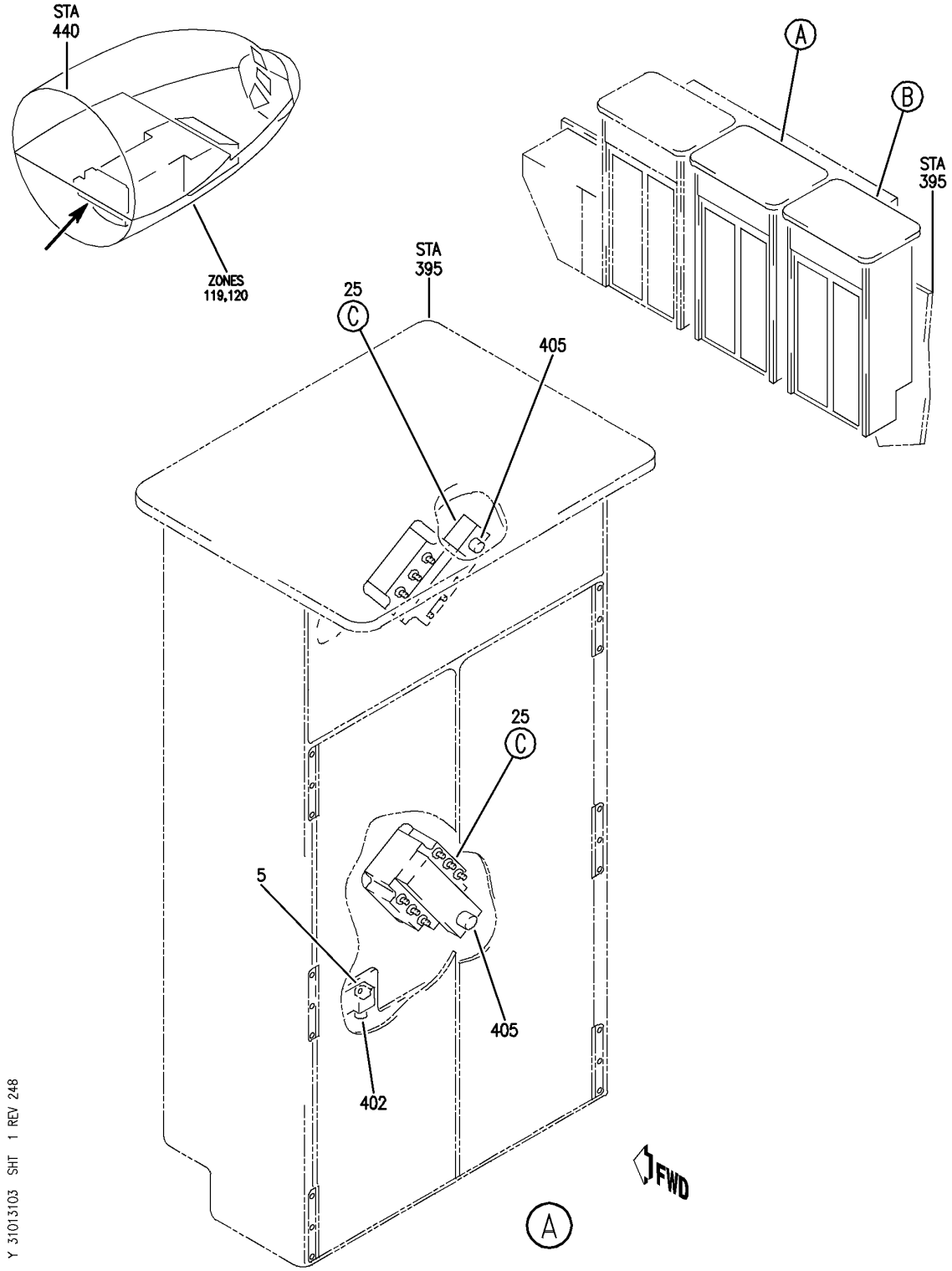

PACKAGE ASSY-OPTION P31 AND P32 GEN PWR PNL (INDICATING/RECORDING ONLY)
FIGURE 3 (SHEET 1)

BOEING PROPRIETARY - Copyright © - Unpublished Work - See title page for details.

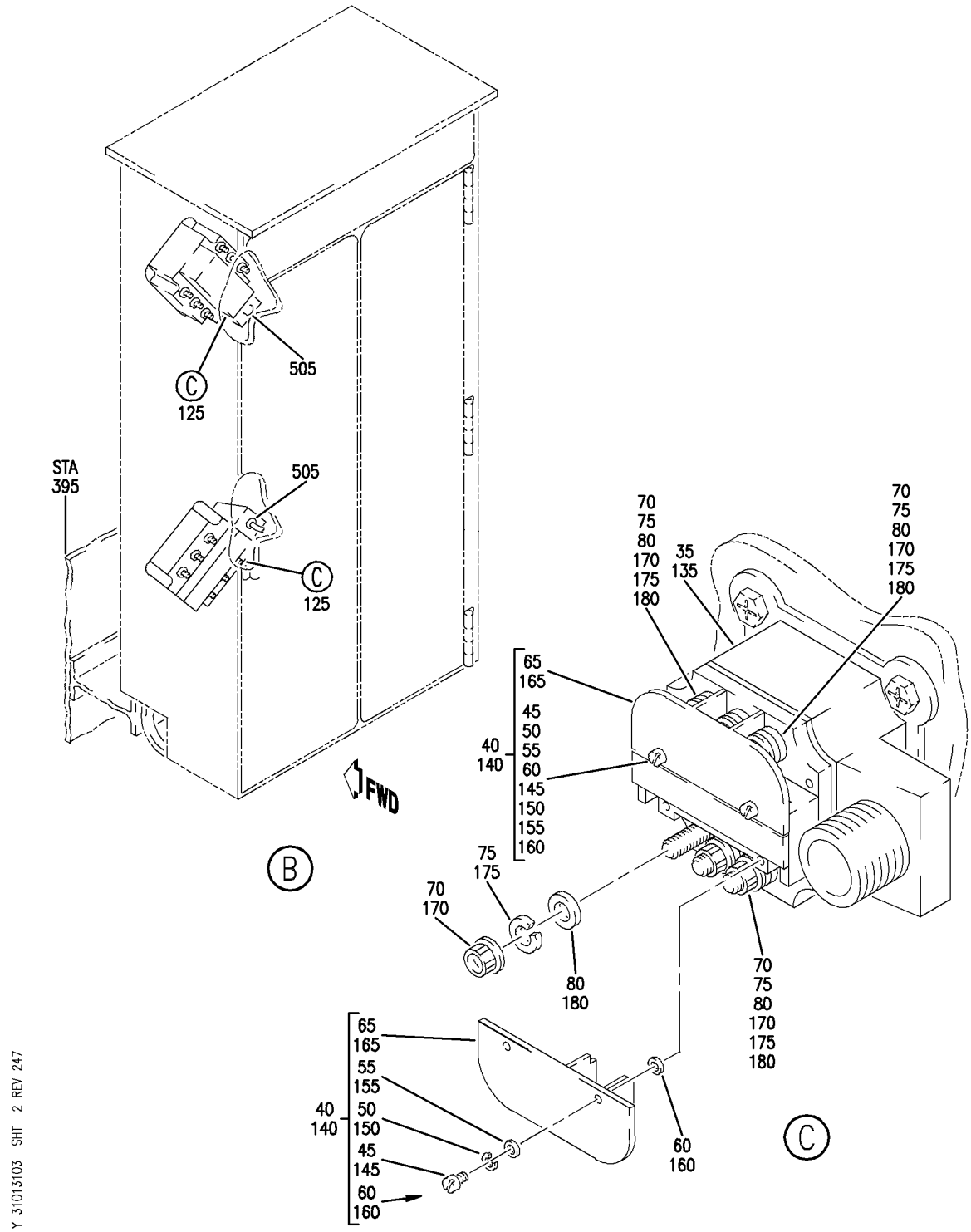

PACKAGE ASSY-OPTION P31 AND P32 GEN PWR PNL (INDICATING/RECORDING ONLY)
FIGURE 3 (SHEET 2)

BOEING PROPRIETARY - Copyright © - Unpublished Work - See title page for details.

FIG ITEM	PART NUMBER	1 2 3 4 5 6 7 NOMENCLATURE	EFFECT FROM TO	UNITS PER ASSY
3		PACKAGE ASSY-OPTION P31 AND P32 GEN PWR PNL (INDICATING/RECORDING ONLY)	101102 108120 504903	
- 1	284N1314-1000	PACKAGE ASSY-OPTION P31 GEN PWR PNL (INDICATING/RECORDING ONLY)	101102 108120 504903	RF
		MISCELLANEOUS DATA: MINOR MODEL 757-200 PASS FOR NHA/OTHER SYS DET SEE: 24-22-01-01B		
5	727802	.TRANSFORMER ASSY- SUPPLIER CODE: V99167 SPECIFICATION NUMBER: S281T001-4 ELECTRICAL EQUIP NUMBER: T00105	101102 108120 504903	1
		ATTACHING PARTS		
- 10	NAS1801-3-18	.SCREW	101102 108120 504903	2
		-------*-------		
25	B430	.CIRCUIT BREAKER ASSY- MAGNET LATCH SUPPLIER CODE: V74063 SPECIFICATION NUMBER: S281T004-1 ELECTRICAL EQUIP NUMBER: C00901 C00902 COMPONENT MAINT MANUAL REF: 24-09-23 OPTIONAL PART: B430-1 V74063	101102 108120 504903	2

MISSING ITEM NUMBERS NOT APPLICABLE

- ITEM NOT ILLUSTRATED

BOEING PROPRIETARY - Copyright © - Unpublished Work - See title page for details.

FIG ITEM	PART NUMBER	1 2 3 4 5 6 7 NOMENCLATURE	EFFECT FROM TO	UNITS PER ASSY
3				
25	B430-1	.CIRCUIT BREAKER ASSY-	101102	2
		MAGNET LATCH	108120	
		SUPPLIER CODE:	504903	
		V74063		
		SPECIFICATION NUMBER:		
		S281T004-1		
		ELECTRICAL EQUIP NUMBER:		
		C00901		
		C00902		
		COMPONENT MAINT MANUAL REF:		
		24-09-23		
		OPTIONAL PART:		
		B430		
		V74063		
		ATTACHING PARTS		
- 30	NAS1801-3-8	.SCREW	101102	4
			108120	
			504903	
		-------*-------		
35	35936-001	..PLATE-WIRING DIAGRAM	101102	1
		SUPPLIER CODE:	108120	
		V74063	504903	
40	36006-010	..COVER ASSY-TERM.	101102	2
		SUPPLIER CODE:	108120	
		V74063	504903	
45	51204-391	...SCREW-BINDING HEAD	101102	4
		SUPPLIER CODE:	108120	
		V74063	504903	
50	51804-021	...WASHER-LOCK	101102	4
		SUPPLIER CODE:	108120	
		V74063	504903	
55	51701-291	...WASHER-FLAT	101102	4
		SUPPLIER CODE:	108120	
		VK5294	504903	
60	20584-002	...WASHER-CAPTIVE NYLOCK	101102	4
		SUPPLIER CODE:	108120	
		V74063	504903	
65	35744-001	...COVER-	101102	2
		SUPPLIER CODE:	108120	
		V74063	504903	
70	50407-370	..NUT-HEX	101102	6
		SUPPLIER CODE:	108120	
		V74063	504903	
75	51807-230	..WASHER-LOCK	101102	6
		SUPPLIER CODE:	108120	
		V74063	504903	
80	51704-010	..WASHER-FLAT	101102	6
		SUPPLIER CODE:	108120	
		V74063	504903	

MISSING ITEM NUMBERS NOT APPLICABLE

- ITEM NOT ILLUSTRATED

BOEING PROPRIETARY - Copyright © - Unpublished Work - See title page for details.

FIG ITEM	PART NUMBER	1 2 3 4 5 6 7 NOMENCLATURE	EFFECT FROM TO	UNITS PER ASSY
3				
- 100	284N1315-1000	PACKAGE ASSY-OPTION P32 GEN PWR PNL (INDICATING/RECORDING ONLY) MISCELLANEOUS DATA: 757 MAJOR MODEL OPTION FOR NHA/OTHER SYS DET SEE: 24-22-01-01C	101102 504903	RF
125	B430	.CIRCUIT BREAKER ASSY- MAGNET LATCH SUPPLIER CODE: V74063 SPECIFICATION NUMBER: S281T004-1 ELECTRICAL EQUIP NUMBER: C00903 C00904 COMPONENT MAINT MANUAL REF: 24-09-23 OPTIONAL PART: B430-1 V74063	101102 504903	2
125	B430-1	.CIRCUIT BREAKER ASSY- MAGNET LATCH SUPPLIER CODE: V74063 SPECIFICATION NUMBER: S281T004-1 ELECTRICAL EQUIP NUMBER: C00903 C00904 COMPONENT MAINT MANUAL REF: 24-09-23 OPTIONAL PART: B430 V74063 ATTACHING PARTS	101102 504903	2
- 130	NAS1801-3-8	.SCREW -------*-------	101102 504903	4
135	35936-001	..PLATE-WIRING DIAGRAM SUPPLIER CODE: V74063	101102 504903	1
140	36006-010	..COVER ASSY-TERM. SUPPLIER CODE: V74063	101102 504903	2
145	51204-391	...SCREW-BINDING HEAD SUPPLIER CODE: V74063	101102 504903	4

MISSING ITEM NUMBERS NOT APPLICABLE

- ITEM NOT ILLUSTRATED

BOEING PROPRIETARY - Copyright © - Unpublished Work - See title page for details.

FIG ITEM	PART NUMBER	1 2 3 4 5 6 7 NOMENCLATURE	EFFECT FROM TO	UNITS PER ASSY
3				
150	51804-021	...WASHER-LOCK SUPPLIER CODE: V74063	101102 504903	4
155	51701-291	...WASHER-FLAT SUPPLIER CODE: VK5294	101102 504903	4
160	20584-002	...WASHER-CAPTIVE NYLOCK SUPPLIER CODE: V74063	101102 504903	4
165	35744-001	...COVER- SUPPLIER CODE: V74063	101102 504903	2
170	50407-370	..NUT-HEX SUPPLIER CODE: V74063	101102 504903	6
175	51807-230	..WASHER-LOCK SUPPLIER CODE: V74063	101102 504903	6
180	51704-010	..WASHER-FLAT SUPPLIER CODE: V74063	101102 504903	6
- 401	286N1136-323	WIRE BUNDLE ASSY	504903	RF
- 401	286N1136-324	WIRE BUNDLE ASSY	101102	RF
- 401	286N1136-325	WIRE BUNDLE ASSY	108120	RF
402	BACC45FT10-5P	.CONNECTOR- ELECTRICAL EQUIP NUMBER: D02162 WIRING DIAGRAM REF: 242111	101102 108120 504903	1
405	BACC45FT20A41S	.CONNECTOR- ELECTRICAL EQUIP NUMBER: D01728 D01730 WIRING DIAGRAM REF: 242211 242212	101102 108120 504903	2
- 500	286N1138-319	WIRE BUNDLE ASSY	504903	RF
- 501	286N1138-321	WIRE BUNDLE ASSY	101102	RF
505	BACC45FT20A41S	.CONNECTOR- ELECTRICAL EQUIP NUMBER: D01816 D01818 WIRING DIAGRAM REF: 242121 242222	101102 504903	2

MISSING ITEM NUMBERS NOT APPLICABLE

- ITEM NOT ILLUSTRATED

BOEING PROPRIETARY - Copyright © - Unpublished Work - See title page for details.

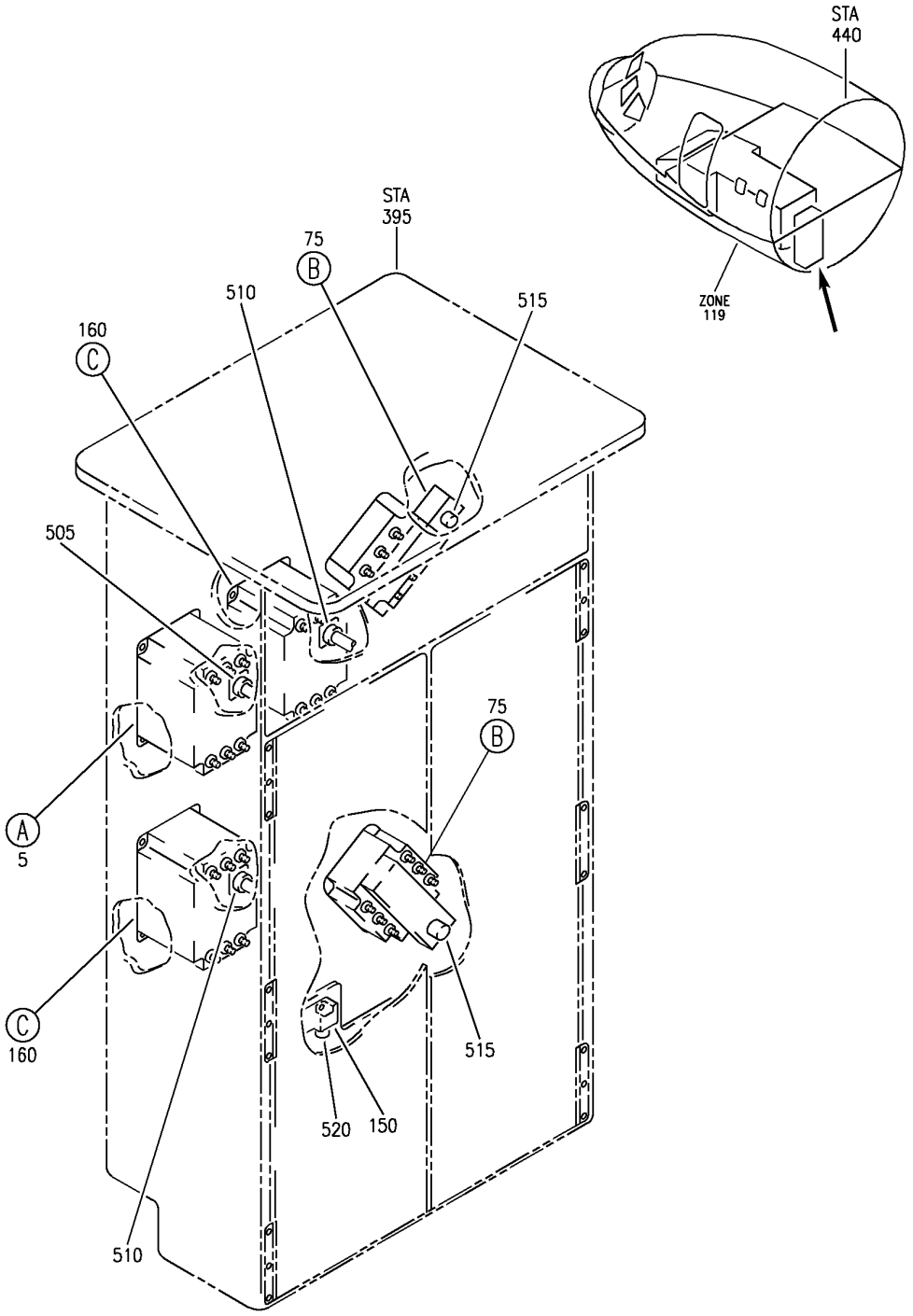

Y 31013105 SHT 1 REV 289

PANEL ASSY-P31 PWR (INDICATING/RECORDING ONLY)
FIGURE 5 (SHEET 1)

BOEING PROPRIETARY - Copyright © - Unpublished Work - See title page for details.

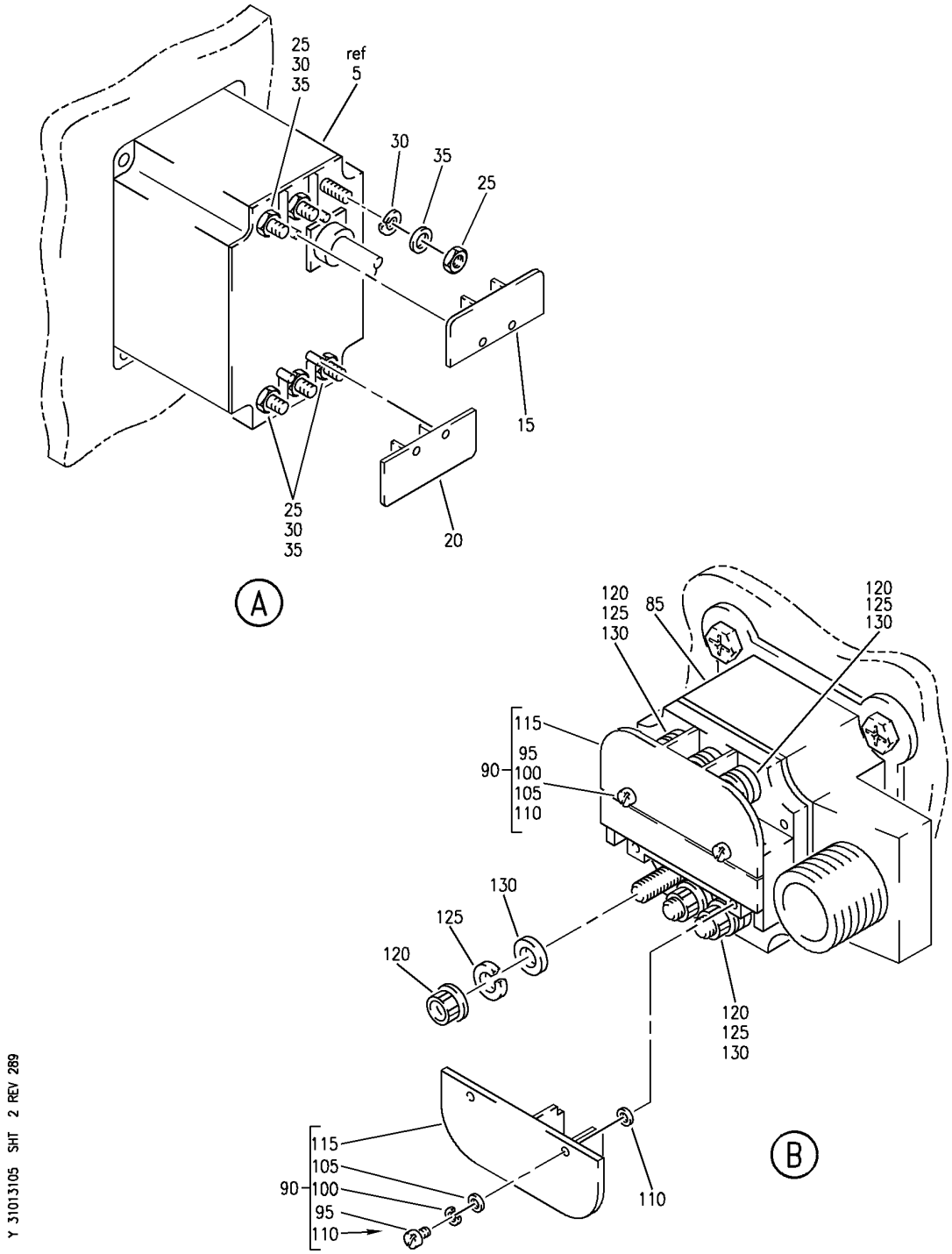

PANEL ASSY-P31 PWR (INDICATING/RECORDING ONLY)
FIGURE 5 (SHEET 2)

BOEING PROPRIETARY - Copyright © - Unpublished Work - See title page for details.

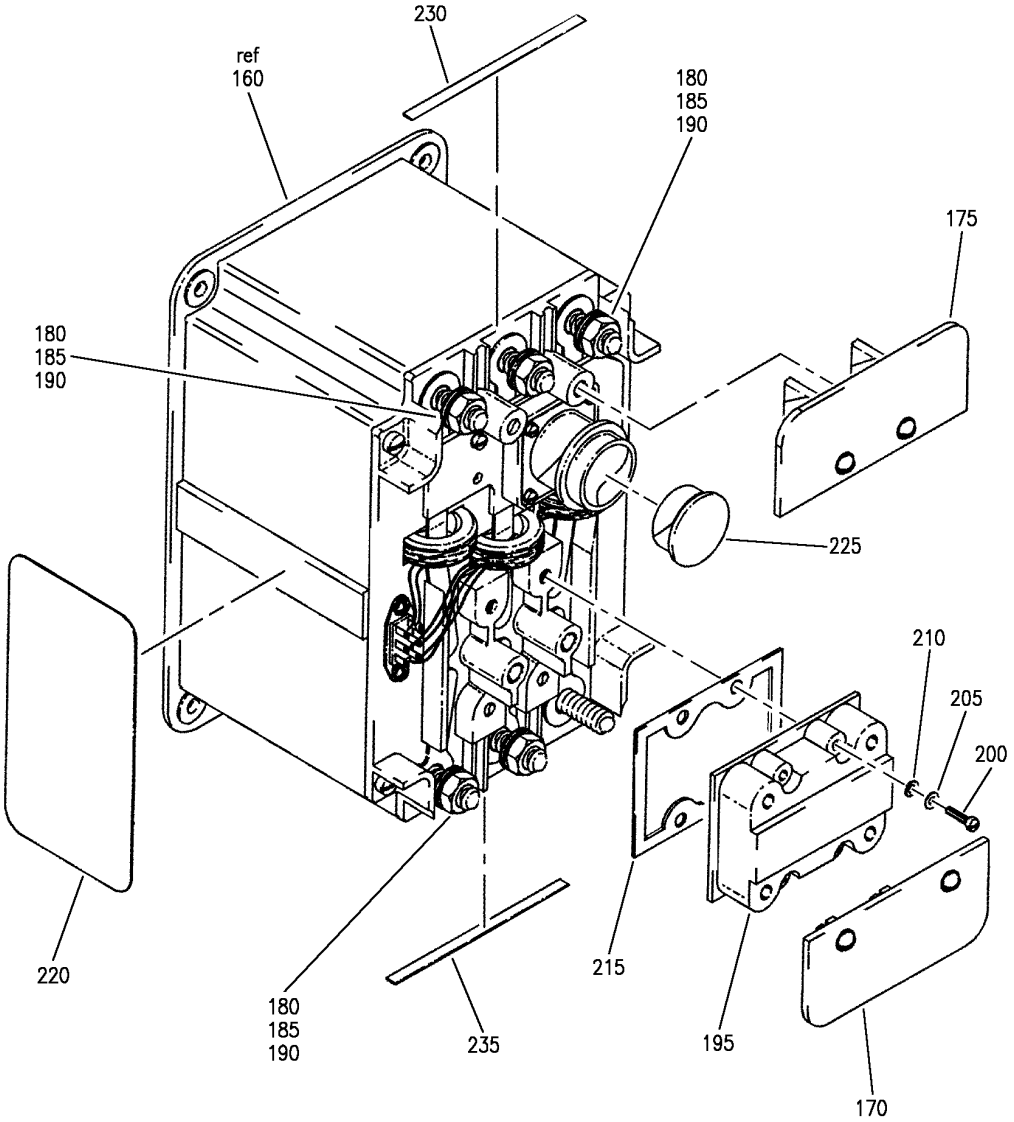

PANEL ASSY-P31 PWR (INDICATING/RECORDING ONLY)
FIGURE 5 (SHEET 3)

BOEING PROPRIETARY - Copyright © - Unpublished Work - See title page for details.

FIG ITEM	PART NUMBER	1 2 3 4 5 6 7 NOMENCLATURE	EFFECT FROM TO	UNITS PER ASSY
5				
		PANEL ASSY-P31 PWR (INDICATING/RECORDING ONLY)	103106	
- 2	MODREF33208	PANEL ASSY-P31 PWR (INDICATING/RECORDING ONLY)	103106	1
		MODULE NUMBER: 284N1314-302 REV B		
		FOR OTHER SYS DETAILS SEE:		
		11-36-05-02A		
		24-21-51-01		
		24-22-51-08		
		24-51-51-26		
		24-53-00-01		
		25-31-04-66		
5	3B39-1C	.CONTROL UNIT-	103106	1
		SUPPLIER CODE: V83298		
		SPECIFICATION NUMBER: S281T003-1		
		ELECTRICAL EQUIP NUMBER: M00227		
		COMPONENT MAINT MANUAL REF: 24-21-17		
		OPTIONAL PART: 3B39-1B V83298		
5	3B39-1B	.CONTROL UNIT-	103106	1
		SUPPLIER CODE: V83298		
		SPECIFICATION NUMBER: S281T003-1		
		ELECTRICAL EQUIP NUMBER: M00227		
		COMPONENT MAINT MANUAL REF: 24-21-17		
		OPTIONAL PART: 3B39-1C V83298		
		ATTACHING PARTS		
- 10	NAS1801-3-8	.SCREW-	103106	4
		-------*-------		
15	1593874-1	..COVER ASSY-TERM.	103106	1
		SUPPLIER CODE: V83298		
20	1593875-1	..COVER ASSY-TERM.	103106	1
		SUPPLIER CODE: V83298		
25	MS51972-3	..NUT	103106	6

MISSING ITEM NUMBERS NOT APPLICABLE

- ITEM NOT ILLUSTRATED

BOEING PROPRIETARY - Copyright © - Unpublished Work - See title page for details.

FIG ITEM	PART NUMBER	1 2 3 4 5 6 7 NOMENCLATURE	EFFECT FROM TO	UNITS PER ASSY
5				
30	MS35338-141	..WASHER	103106	6
35	AN960C616L	..WASHER	103106	6
75	B430	.CIRCUIT BREAKER ASSY- MAGNET LATCH SUPPLIER CODE: V74063 SPECIFICATION NUMBER: S281T004-1 ELECTRICAL EQUIP NUMBER: C00901 C00902 COMPONENT MAINT MANUAL REF: 24-09-23 OPTIONAL PART: B430-1 V74063	103106	2
75	B430-1	.CIRCUIT BREAKER ASSY- MAGNET LATCH SUPPLIER CODE: V74063 SPECIFICATION NUMBER: S281T004-1 ELECTRICAL EQUIP NUMBER: C00901 C00902 COMPONENT MAINT MANUAL REF: 24-09-23 OPTIONAL PART: B430 V74063	103106	2
		ATTACHING PARTS		
- 80	NAS1801-3-8	.SCREW- -------*-------	103106	8
85	35936-001	..PLATE-WIRING DIAGRAM SUPPLIER CODE: V74063	103106	1
90	36006-010	..COVER ASSY-TERM. SUPPLIER CODE: V74063	103106	2
95	51204-391	...SCREW-BINDING HEAD SUPPLIER CODE: V74063	103106	4
100	51804-021	...WASHER- SUPPLIER CODE: V74063	103106	4
105	51701-291	...WASHER- SUPPLIER CODE: VK5294	103106	4

MISSING ITEM NUMBERS NOT APPLICABLE

- ITEM NOT ILLUSTRATED

BOEING PROPRIETARY - Copyright © - Unpublished Work - See title page for details.

FIG ITEM	PART NUMBER	1 2 3 4 5 6 7 NOMENCLATURE	EFFECT FROM TO	UNITS PER ASSY
5				
110	20584-002	...WASHER- SUPPLIER CODE: V74063	103106	4
115	35744-001	...COVER- SUPPLIER CODE: V74063	103106	2
120	50407-370	..NUT- SUPPLIER CODE: V74063	103106	6
125	51807-230	..WASHER- SUPPLIER CODE: V74063	103106	6
130	51704-010	..WASHER- SUPPLIER CODE: V74063	103106	6
150	727802	.TRANSFORMER ASSY- SUPPLIER CODE: V99167 SPECIFICATION NUMBER: S281T001-4 ELECTRICAL EQUIP NUMBER: T00105 ATTACHING PARTS	103106	1
- 155	NAS1801-3-18	.SCREW- -------*-------	103106	2
160	3B41-3B	.CONTROL UNIT ASSY- ELECTRICAL LOAD SUPPLIER CODE: V83298 SPECIFICATION NUMBER: S281T003-3 ELECTRICAL EQUIP NUMBER: M10005 M10006 COMPONENT MAINT MANUAL REF: 24-21-18 OPTIONAL PART: 3B41-3A V83298	103106	2

MISSING ITEM NUMBERS NOT APPLICABLE

- ITEM NOT ILLUSTRATED

BOEING PROPRIETARY - Copyright © - Unpublished Work - See title page for details.

FIG ITEM	PART NUMBER	1 2 3 4 5 6 7 NOMENCLATURE	EFFECT FROM TO	UNITS PER ASSY
5				
160	3B41-3A	.CONTROL UNIT ASSY-	103106	2
		ELECTRICAL LOAD		
		SUPPLIER CODE:		
		V83298		
		SPECIFICATION NUMBER:		
		S281T003-3		
		ELECTRICAL EQUIP NUMBER:		
		M10005		
		M10006		
		COMPONENT MAINT MANUAL REF:		
		24-21-18		
		OPTIONAL PART:		
		3B41-3B		
		V83298		
160	3B41-1A	.CONTROL UNIT ASSY-	103106	2
		ELECTRICAL LOAD		
		SUPPLIER CODE:		
		V83298		
		SPECIFICATION NUMBER:		
		S281T003-2		
		ELECTRICAL EQUIP NUMBER:		
		M10005		
		M10006		
		COMPONENT MAINT MANUAL REF:		
		24-21-18		
		ATTACHING PARTS		
- 165	NAS1801-3-8	.SCREW-	103106	8
		-------*-------		
170	1593874-1	..COVER ASSY-TERM.	103106	1
		SUPPLIER CODE:		
		V83298		
175	1593875-1	..COVER ASSY-TERM.	103106	1
		SUPPLIER CODE:		
		V83298		
180	MS51972-3	..NUT	103106	6
185	MS35338-135	..WASHER	103106	1
190	NAS620C4L	..WASHER	103106	6
195	1593873-1	..CHAMBER-BASE	103106	1
		SUPPLIER CODE:		
		V83298		
		ATTACHING PARTS		
200	51204-831	..SCREW-MACHINE	103106	4
		SUPPLIER CODE:		
		V74063		
205	51806-031	..WASHER-LOCK	103106	4
		SUPPLIER CODE:		
		V74063		

MISSING ITEM NUMBERS NOT APPLICABLE

- ITEM NOT ILLUSTRATED

BOEING PROPRIETARY - Copyright © - Unpublished Work - See title page for details.

FIG ITEM	PART NUMBER	1 2 3 4 5 6 7 NOMENCLATURE	EFFECT FROM TO	UNITS PER ASSY
5				
210	51702-121	..WASHER-FLAT SUPPLIER CODE: VK5294 -------*-------	103106	4
215	1593903-1	..SEAL- SUPPLIER CODE: V83298	103106	1
220	1593095	..DECAL-WIRING DIAGRAM SUPPLIER CODE: V83298	103106	1
225	MS90376-18Y	..COVER- CONFIG CHG DATA FROM A CMM: SUPSD BY 6425811-7	103106	1
225	6425811-7	..COVER- SUPPLIER CODE: V83298 CONFIG CHG DATA FROM A CMM: SUPSDS MS90376-18Y	103106	1
230	1593351	..PLATE-IDENT SUPPLIER CODE: V83298	103106	1
235	1593352	..PLATE-IDENT SUPPLIER CODE: V83298	103106	1
- 501	286N1136-704	WIRE BUNDLE ASSY	103106	RF
505	BACC45FT16A24S	.CONNECTOR- ELECTRICAL EQUIP NUMBER: D02352 WIRING DIAGRAM REF: 253133	103106	1
510	BACC45FT16A24S6	.CONNECTOR- ELECTRICAL EQUIP NUMBER: D03062 D02934 WIRING DIAGRAM REF: 291122 291131	103106	2
515	BACC45FT20A41S	.CONNECTOR- ELECTRICAL EQUIP NUMBER: D01728 D01730 WIRING DIAGRAM REF: 242211 242212	103106	2
520	BACC45FT10-5P	.CONNECTOR- ELECTRICAL EQUIP NUMBER: D02162 WIRING DIAGRAM REF: 242111	103106	1

MISSING ITEM NUMBERS NOT APPLICABLE

- ITEM NOT ILLUSTRATED

BOEING PROPRIETARY - Copyright © - Unpublished Work - See title page for details.

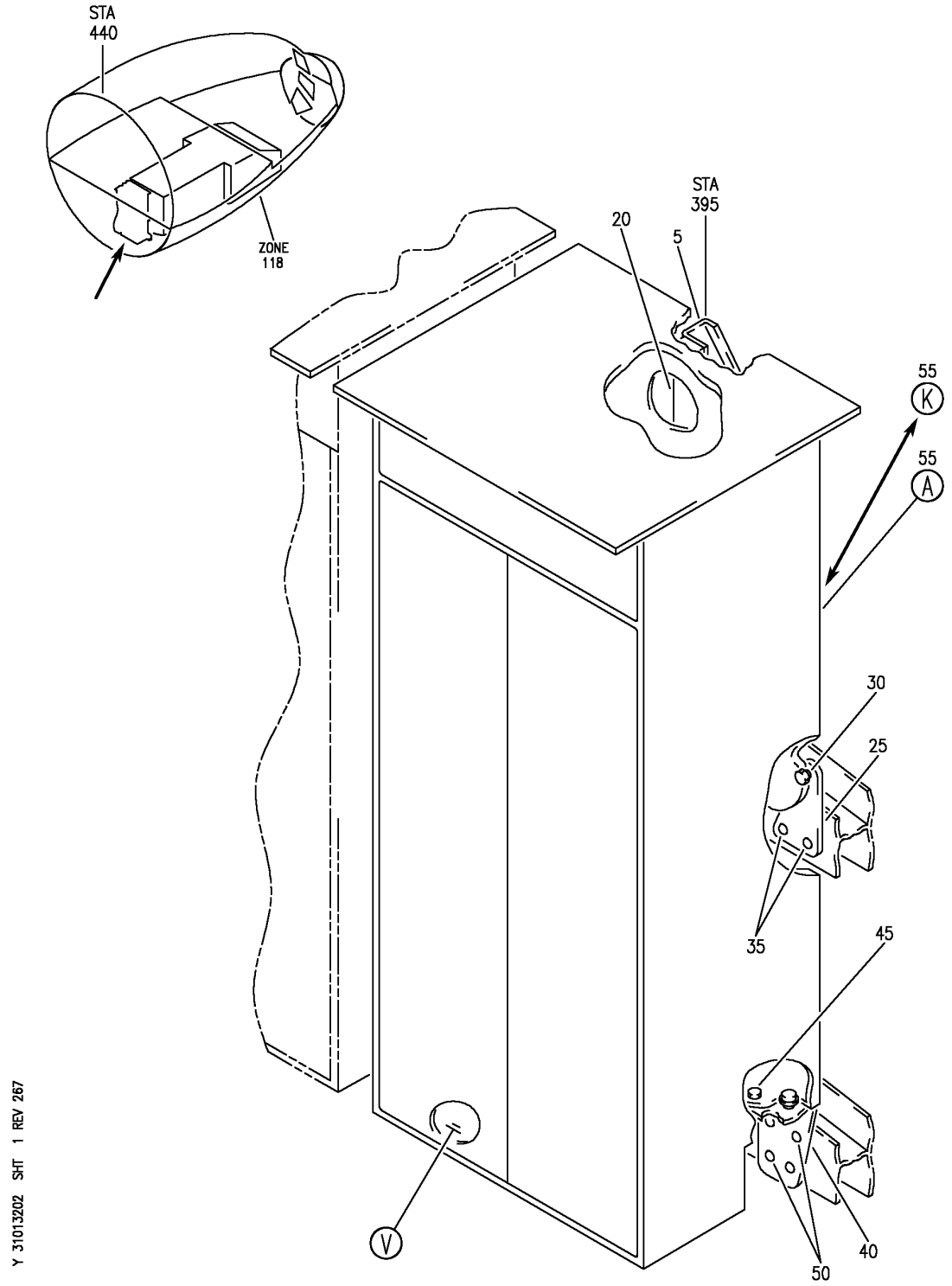

PANEL INSTL-P31, P32 AND P34 PWR (RIGHT GENERATOR POWER PANELS ONLY)
FIGURE 2 (SHEET 1)

BOEING PROPRIETARY - Copyright © - Unpublished Work - See title page for details.

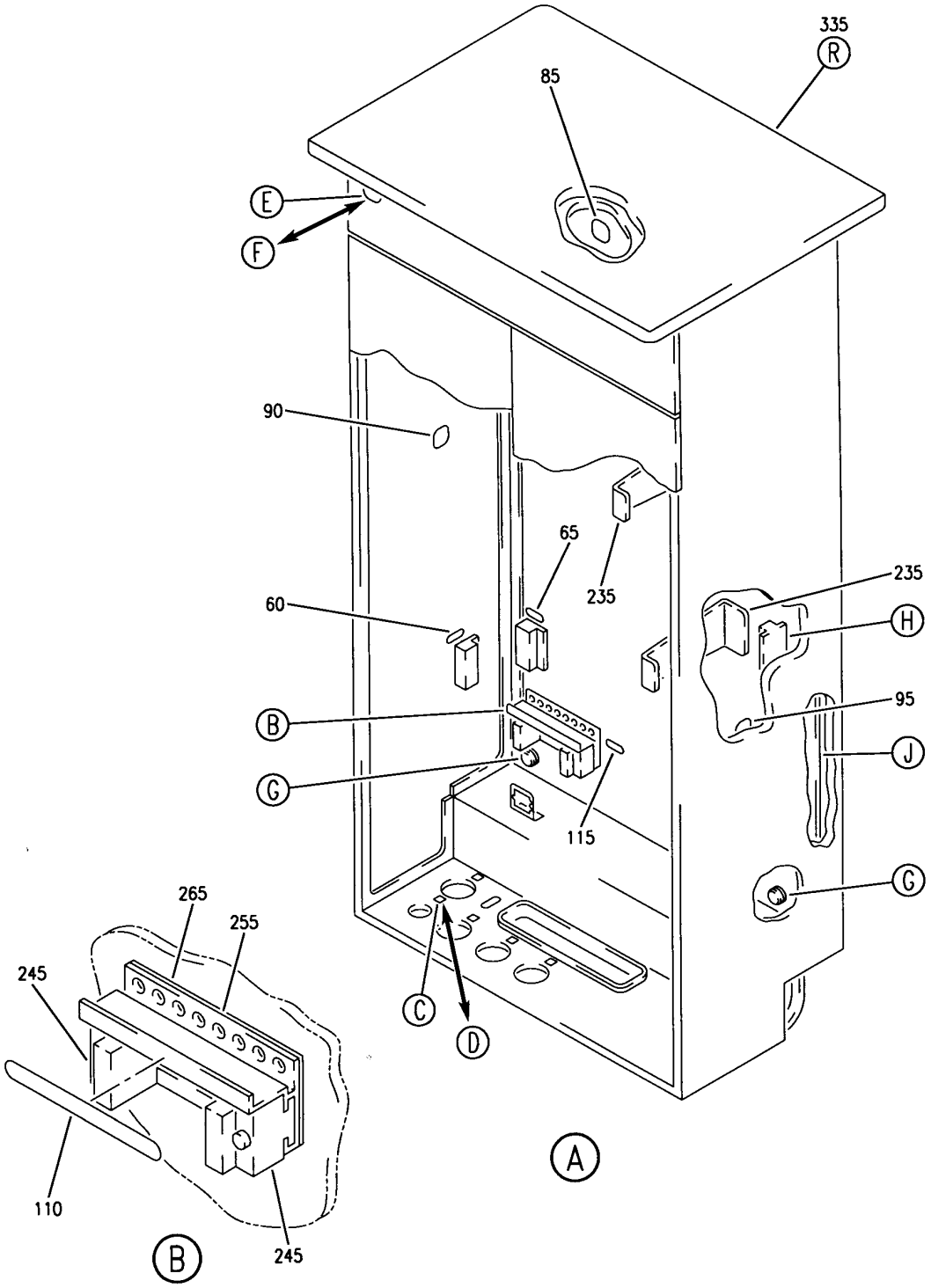

PANEL INSTL-P31, P32 AND P34 PWR (RIGHT GENERATOR POWER PANELS ONLY)
FIGURE 2 (SHEET 2)

BOEING PROPRIETARY - Copyright © - Unpublished Work - See title page for details.

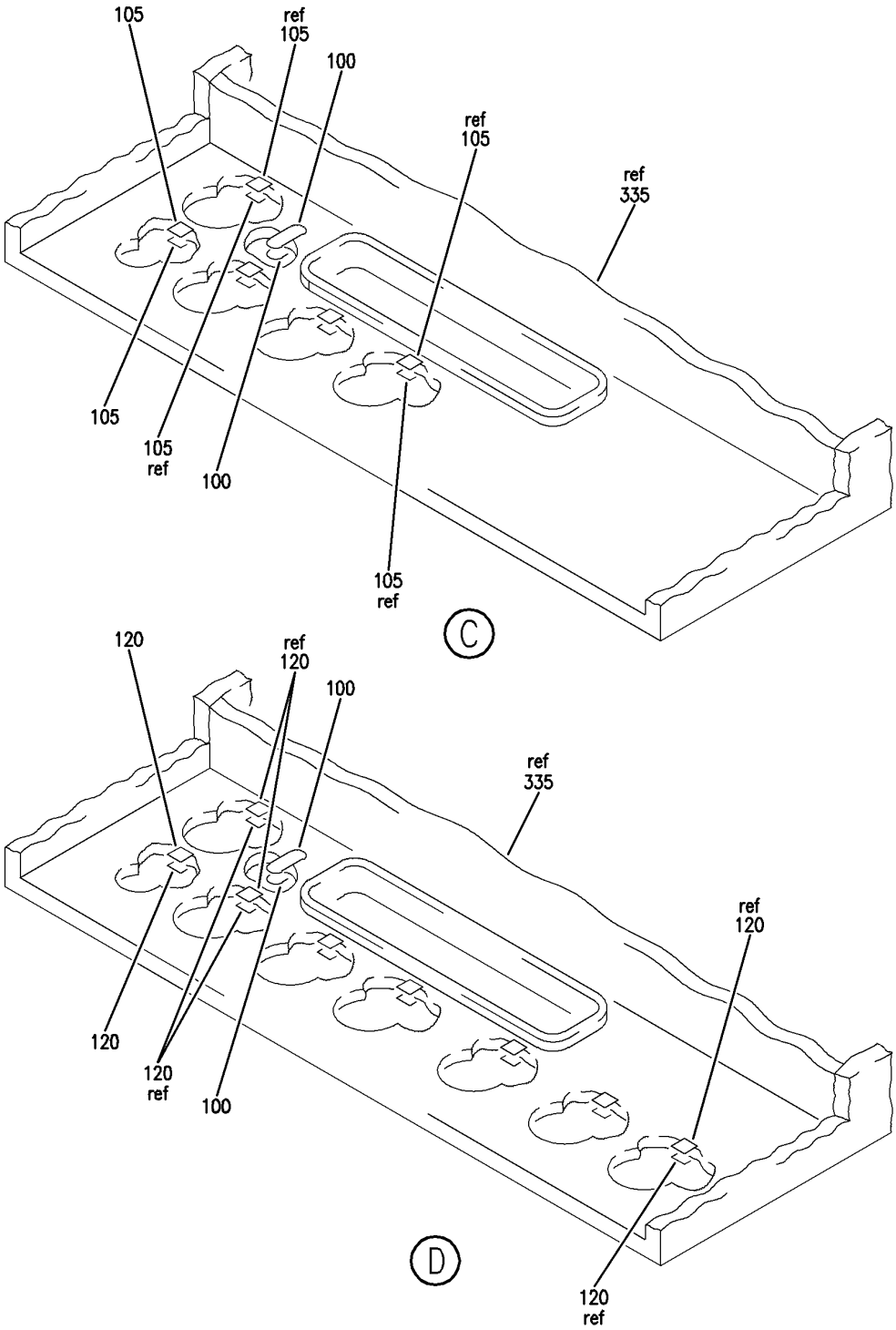

Y 31013202 SHT 3 REV 229

PANEL INSTL-P31, P32 AND P34 PWR (RIGHT GENERATOR POWER PANELS ONLY)
FIGURE 2 (SHEET 3)

BOEING PROPRIETARY - Copyright © - Unpublished Work - See title page for details.

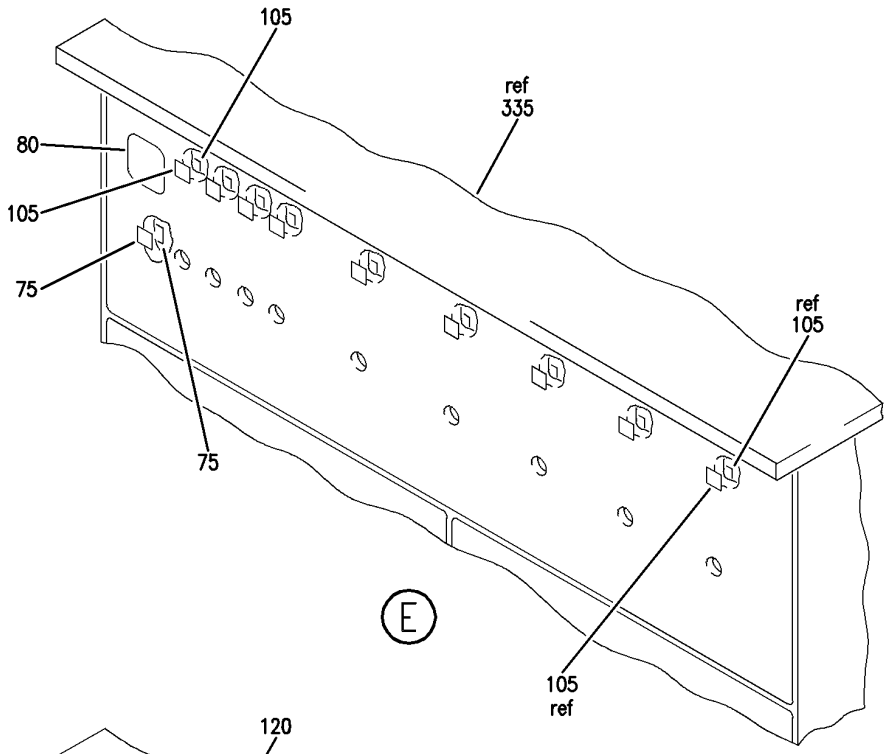

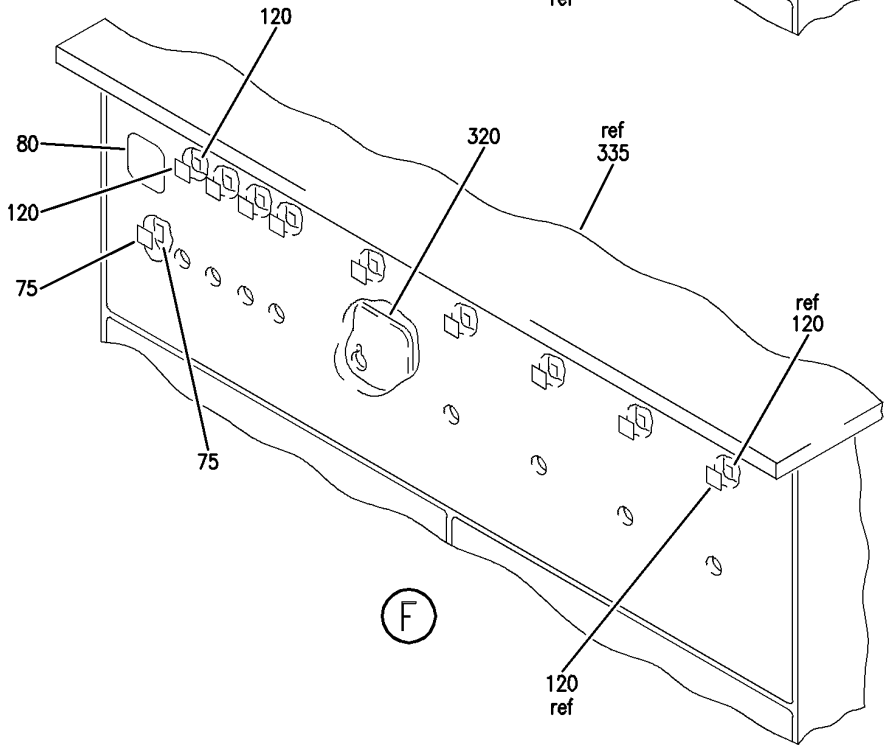

Y 31013202 SHT 4 REV 229

PANEL INSTL-P31, P32 AND P34 PWR (RIGHT GENERATOR POWER PANELS ONLY)
FIGURE 2 (SHEET 4)

BOEING PROPRIETARY - Copyright © - Unpublished Work - See title page for details.

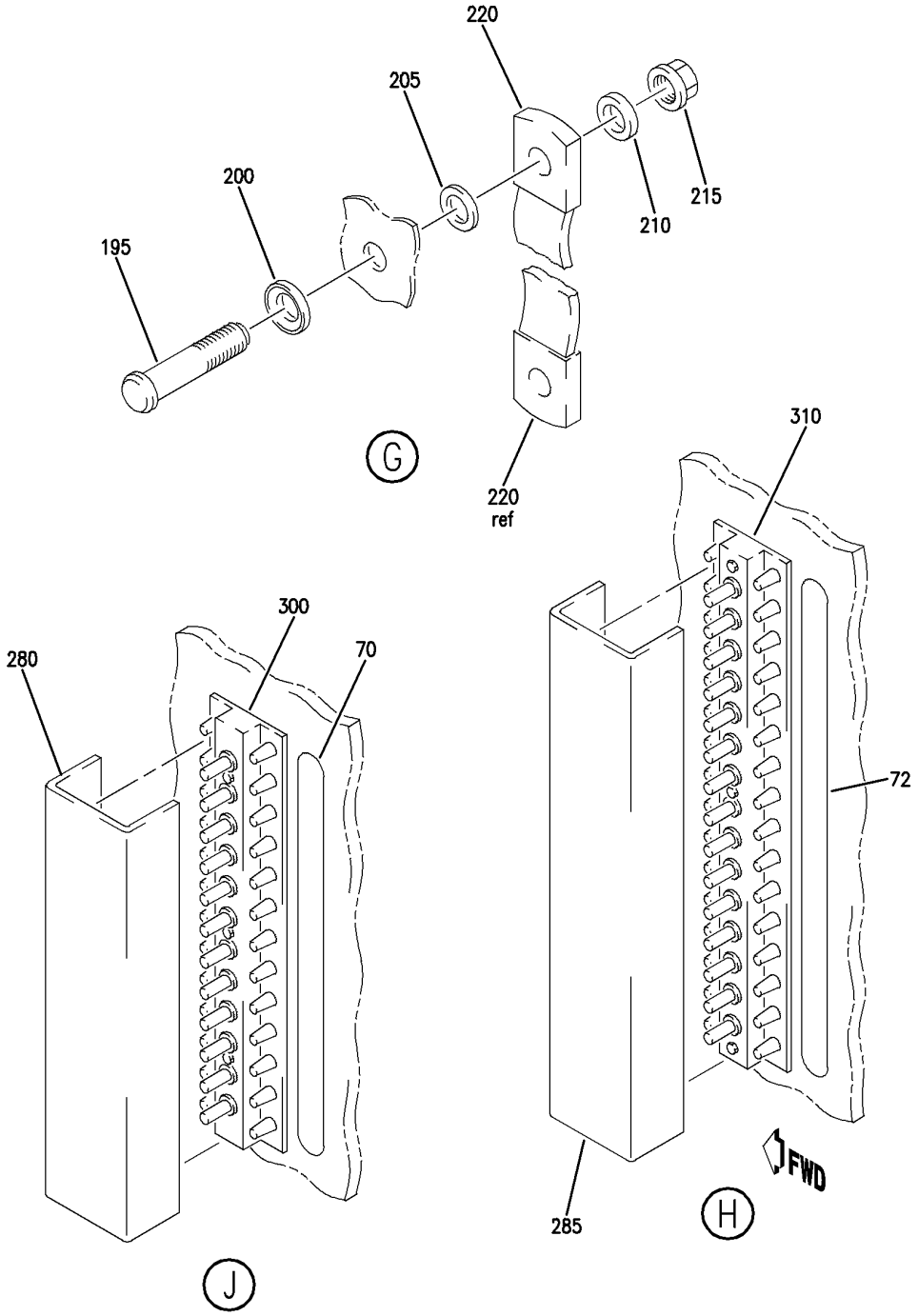

Y 31013202 SHT 5 REV 229

PANEL INSTL-P31, P32 AND P34 PWR (RIGHT GENERATOR POWER PANELS ONLY)
FIGURE 2 (SHEET 5)

BOEING PROPRIETARY - Copyright © - Unpublished Work - See title page for details.

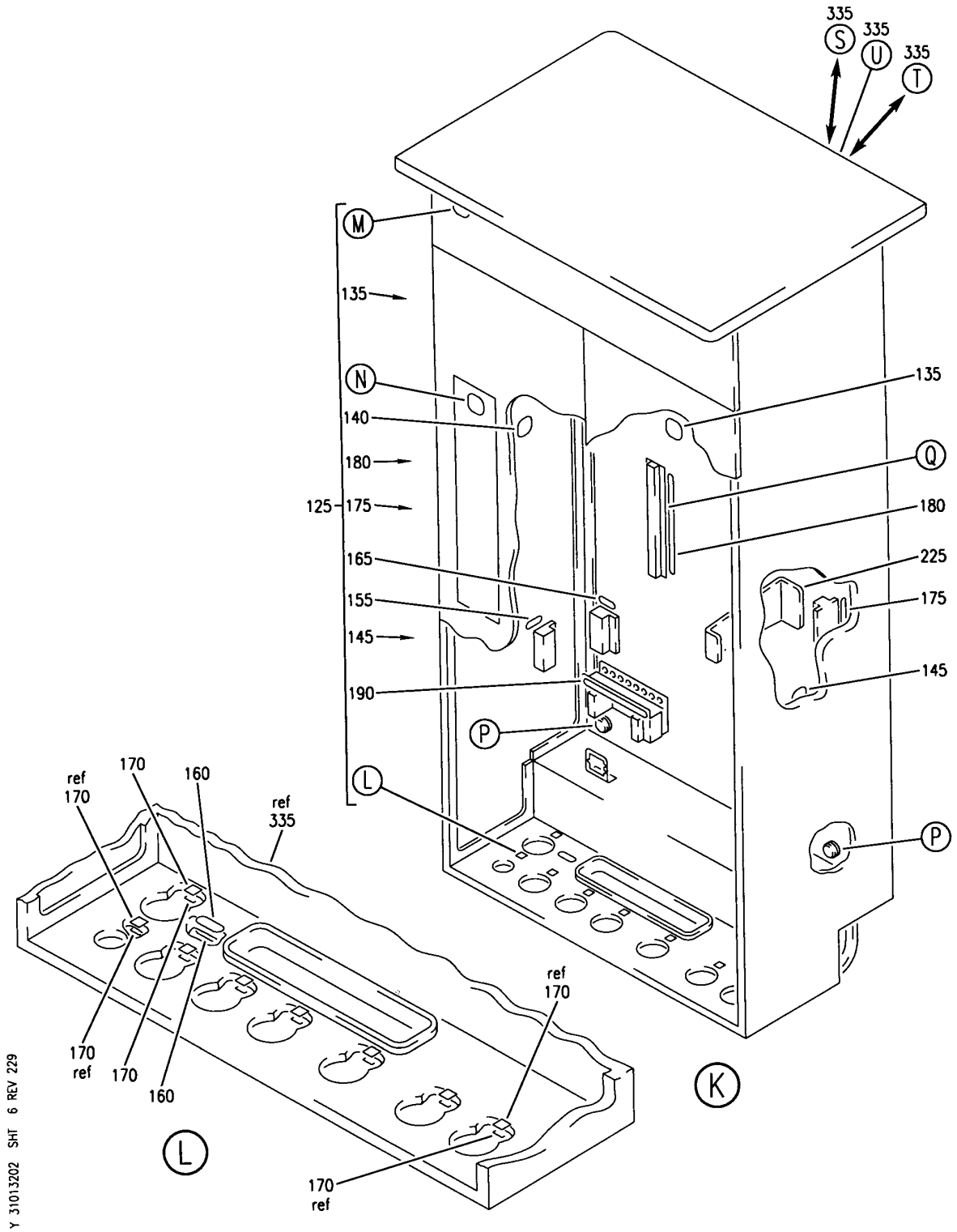

PANEL INSTL-P31, P32 AND P34 PWR (RIGHT GENERATOR POWER PANELS ONLY)
FIGURE 2 (SHEET 6)

BOEING PROPRIETARY - Copyright © - Unpublished Work - See title page for details.

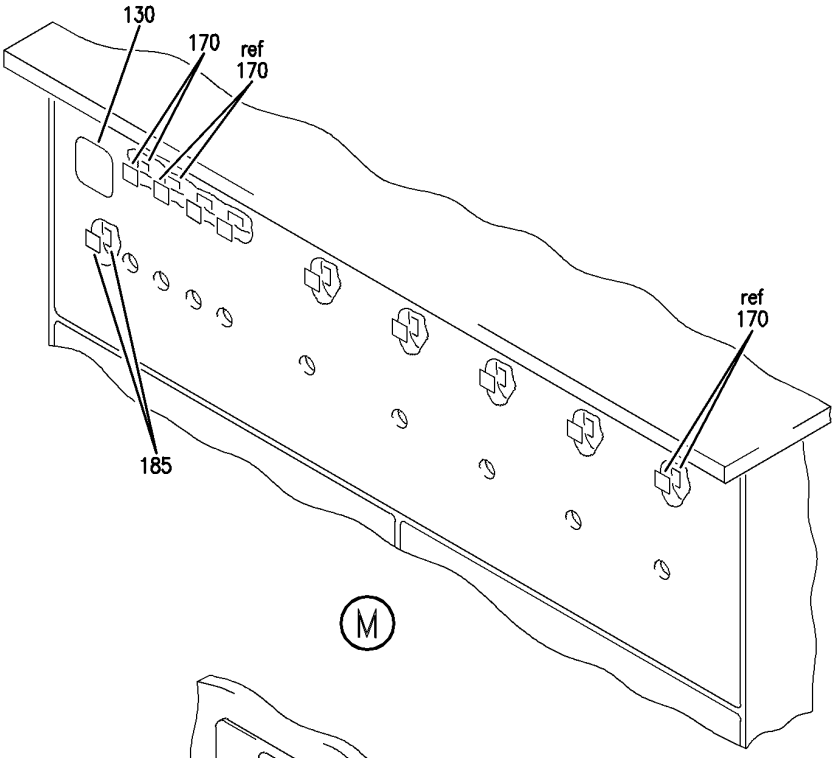

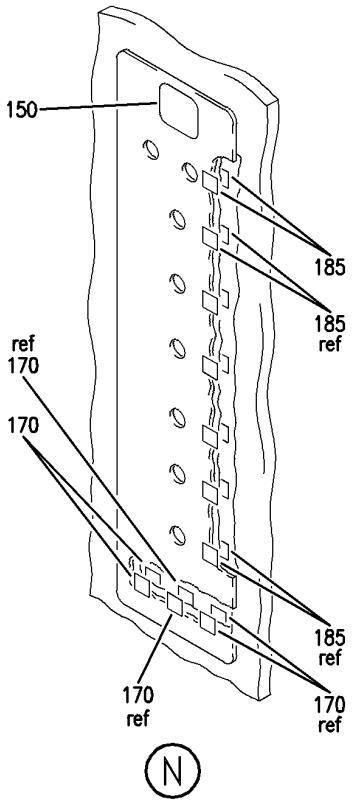

Y 31013202 SHT 7 REV 229

PANEL INSTL-P31, P32 AND P34 PWR (RIGHT GENERATOR POWER PANELS ONLY)
FIGURE 2 (SHEET 7)

BOEING PROPRIETARY - Copyright © - Unpublished Work - See title page for details.

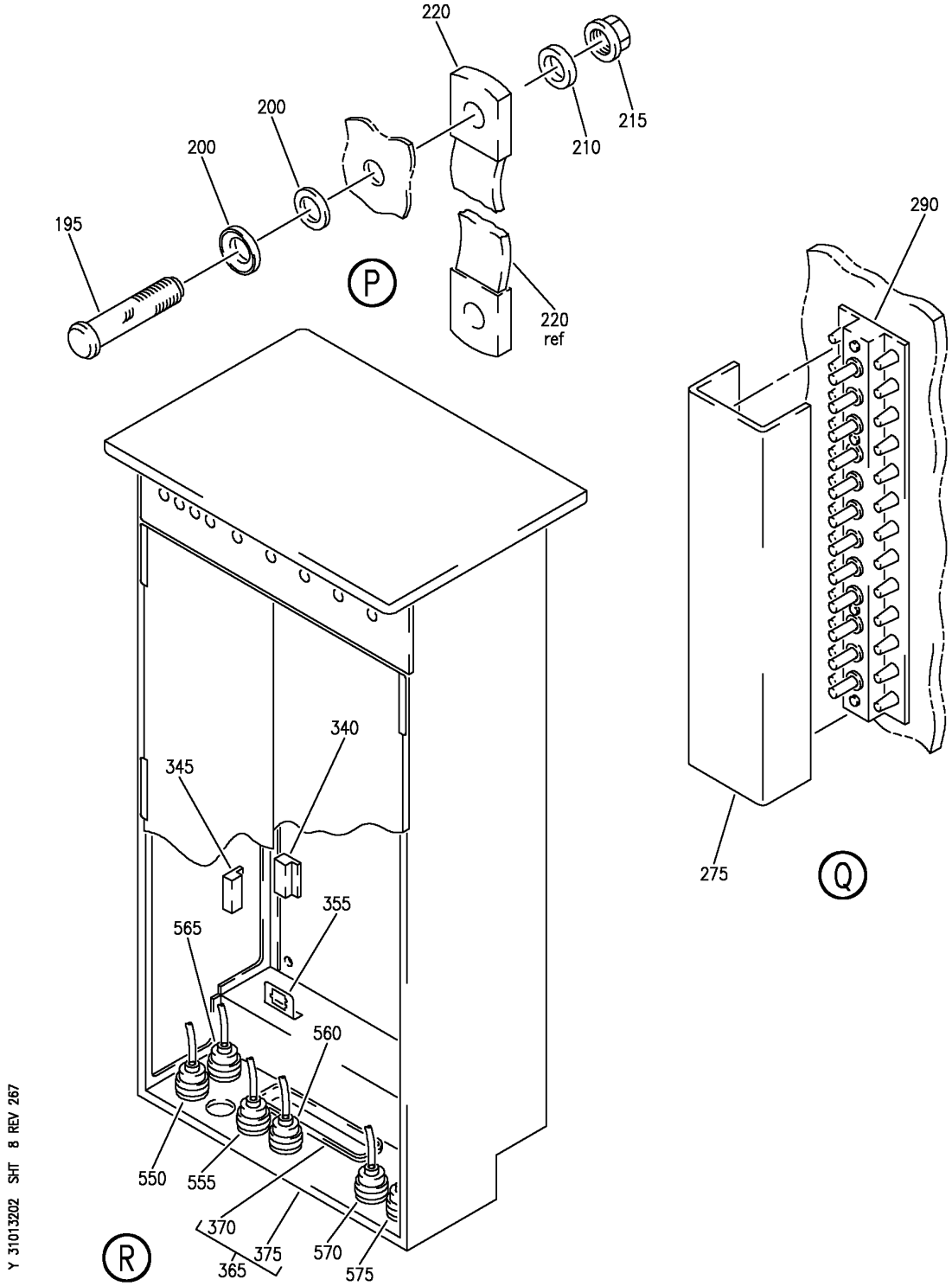

PANEL INSTL-P31, P32 AND P34 PWR (RIGHT GENERATOR POWER PANELS ONLY)
FIGURE 2 (SHEET 8)

BOEING PROPRIETARY - Copyright © - Unpublished Work - See title page for details.

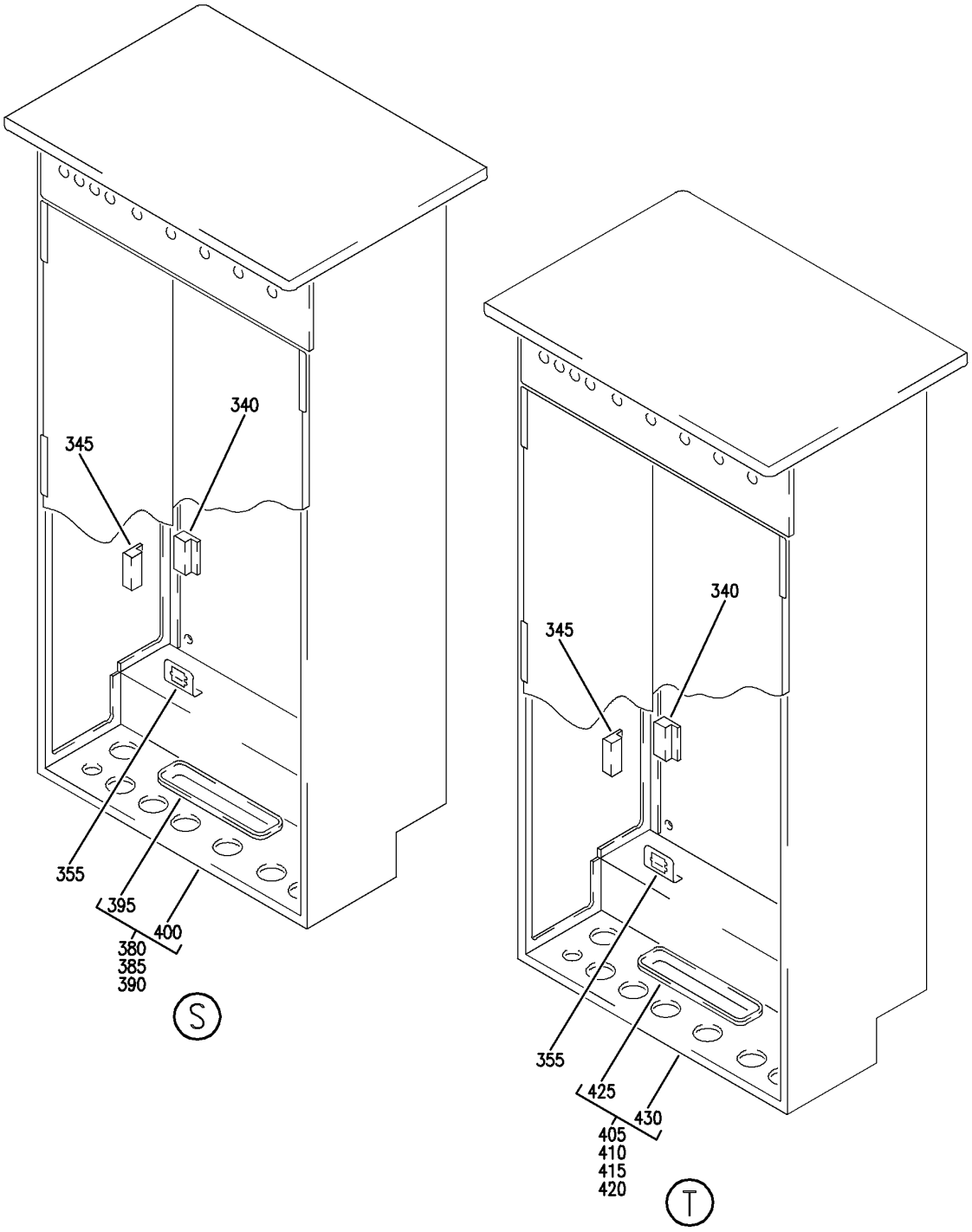

Y 31013202 SHT 9 REV 229

PANEL INSTL-P31, P32 AND P34 PWR (RIGHT GENERATOR POWER PANELS ONLY)
FIGURE 2 (SHEET 9)

BOEING PROPRIETARY - Copyright © - Unpublished Work - See title page for details.

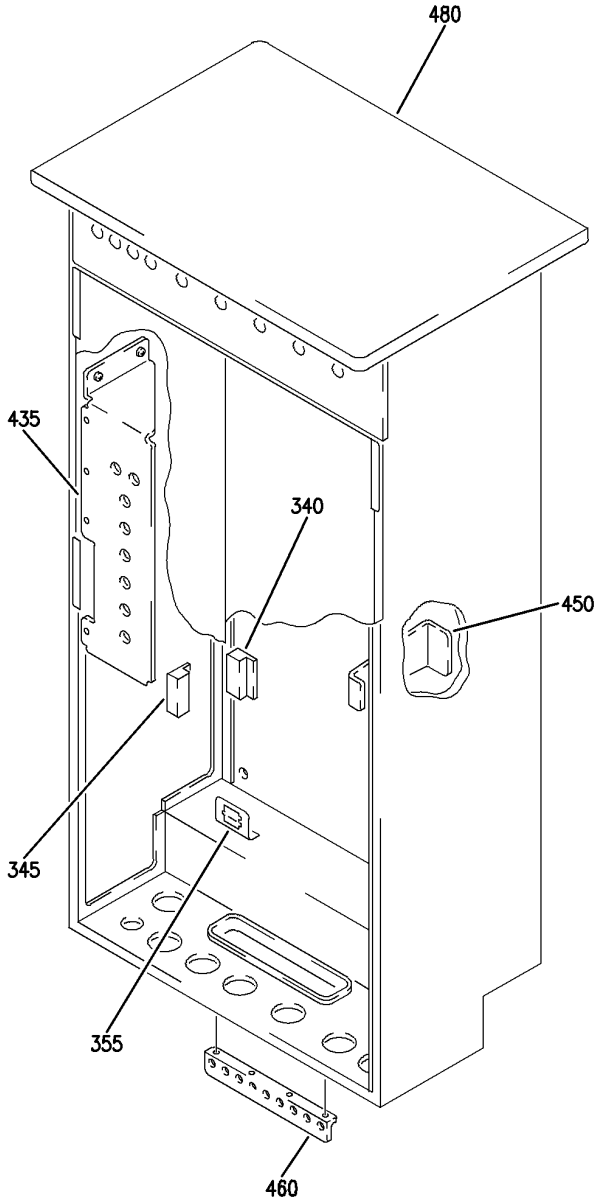

Y 31013202 SHT 10 REV 229

PANEL INSTL-P31, P32 AND P34 PWR (RIGHT GENERATOR POWER PANELS ONLY)
FIGURE 2 (SHEET 10)

BOEING PROPRIETARY - Copyright © - Unpublished Work - See title page for details.

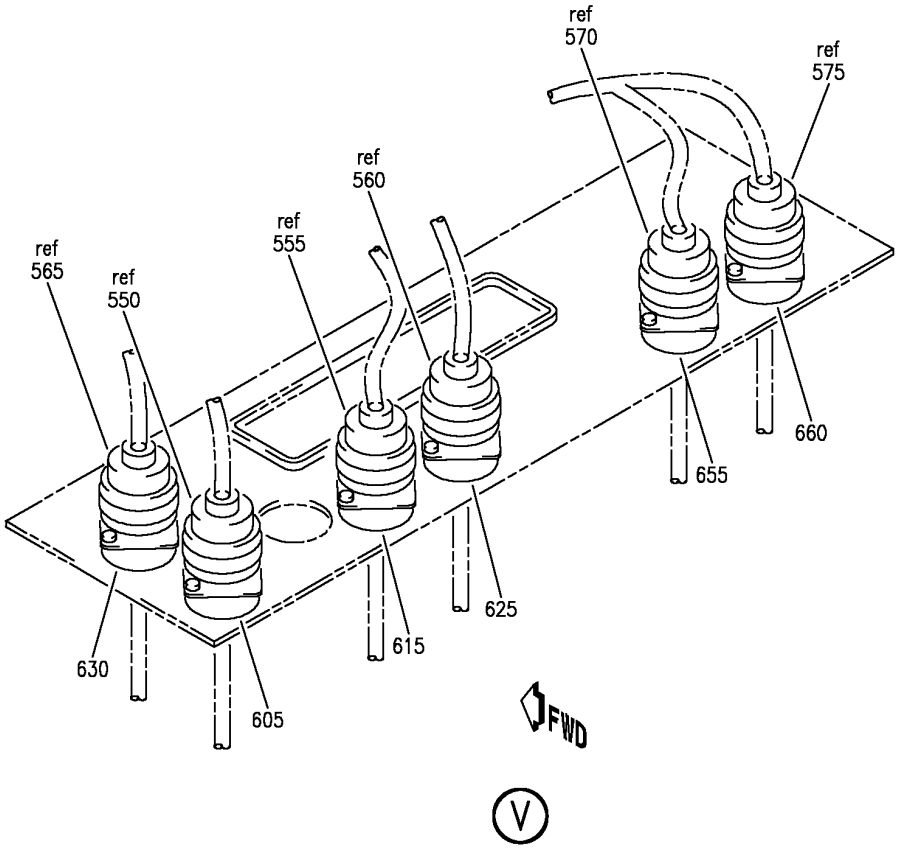

Y 31013202 SHT 11 REV 267

PANEL INSTL-P31, P32 AND P34 PWR (RIGHT GENERATOR POWER PANELS ONLY)
FIGURE 2 (SHEET 11)

BOEING PROPRIETARY - Copyright © - Unpublished Work - See title page for details.

FIG ITEM	PART NUMBER	1 2 3 4 5 6 7 NOMENCLATURE	EFFECT FROM TO	UNITS PER ASSY
2		PANEL INSTL-P31, P32 AND P34 PWR (RIGHT GENERATOR POWER PANELS ONLY)	002004 006100 107107 121503 904999	
1	284N1317-6	PANEL INSTL-P31, P32 AND P34 PWR (RIGHT GENERATOR POWER PANELS ONLY) FOR NHA/ADDITIONAL DET SEE: 24-00-58-01C	107107	RF
1	284N1317-7	PANEL INSTL-P31, P32 AND P34 PWR (RIGHT GENERATOR POWER PANELS ONLY) FOR NHA/ADDITIONAL DET SEE: 24-00-58-01C	904949	RF
1	284N1317-8	PANEL INSTL-P31, P32 AND P34 PWR (RIGHT GENERATOR POWER PANELS ONLY) FOR NHA/ADDITIONAL DET SEE: 24-00-58-01C	002004 006007 121503 952999	RF
1	284N1317-9	PANEL INSTL-P31, P32 AND P34 PWR (RIGHT GENERATOR POWER PANELS ONLY) FOR NHA/ADDITIONAL DET SEE: 24-00-58-01C	008100 950951	RF
5	284N1365-58	.BRACKET ASSY	002004 006100 107107 121503 904999	1
		ATTACHING PARTS		
- 10	BACB30NE4-2	.BOLT	002004 006100 107107 121503 904999	2
- 15	AN960D416L	.WASHER	002004 006100 107107 121503 904999	2
		-------*-------		
20	284N1330-2	.SPACER	107107 904949	1
20	284N1330-4	.SPACER	002004 006100 121503 950999	1

MISSING ITEM NUMBERS NOT APPLICABLE

- ITEM NOT ILLUSTRATED

BOEING PROPRIETARY - Copyright © - Unpublished Work - See title page for details.

FIG ITEM	PART NUMBER	1 2 3 4 5 6 7 NOMENCLATURE	EFFECT FROM TO	UNITS PER ASSY
2				
25	284N1365-19	.BRACKET ASSY	002004 006100 107107 121503 904999	1
		ATTACHING PARTS		
30	NAS6604-2	.BOLT	002004 006100 107107 121503 904999	1
35	BACR15BA5D	.RIVET- SIZE DETERMINED ON INSTL.	002004 006100 107107 121503 904999	2
		-------*-------		
40	284N1365-46	.BRACKET ASSY	107107	1
40	284N1365-63	.BRACKET ASSY	002004 006100 121503 904999	1
		ATTACHING PARTS		
45	BACB30NE4-2	.BOLT	002004 006100 107107 121503 904999	1
50	BACR15BB5D	.RIVET- SIZE DETERMINED ON INSTL.	002004 006100 107107 121503 904999	4
		-------*-------		

MISSING ITEM NUMBERS NOT APPLICABLE

– ITEM NOT ILLUSTRATED

BOEING PROPRIETARY - Copyright © - Unpublished Work - See title page for details.

FIG ITEM	PART NUMBER	1 2 3 4 5 6 7 NOMENCLATURE	EFFECT FROM TO	UNITS PER ASSY
2				
55	284N1315-1	.EQUIPMENT ASSY-	002004	1
		VARIABLE DRAWING REF:	006100	
		284N1315-5015	107107	
		284N1315-5023	121503	
		284N1315-5049	904999	
		284N1315-5050		
		284N1315-5052		
		FUNCTIONAL REFERENCE:		
		PLACARDS AND MARKINGS		
		FOR DETAILS SEE		
		11-36-07-02		
		ELECTRICAL POWER		
		FOR DETAILS SEE		
		24-21-51-03		
		24-22-03-06		
		24-22-51-06		
		24-23-01-02		
		24-32-51-04		
		24-51-55-02		
		EQUIPMENT/FURNISHINGS		
		FOR DETAILS SEE		
		25-31-03-03		
		HYDRAULIC POWER		
		FOR DETAILS SEE		
		29-11-67-01		
60	BAC27NEX0528	..DECAL-	002004	1
		PLACARD CONTENT:	006100	
		GD537	107107	
			121503	
			904999	
65	BAC27NEX0655	..DECAL-	002004	1
		PLACARD CONTENT:	006100	
		GD539	107107	
			121503	
			904999	
72	BAC27NEX1592	..DECAL-	002004	1
		PLACARD CONTENT:	006100	
		TB5032 1 THRU 15	107107	
			121503	
			904999	
75	BAC27TEX0105	..DECAL	002004	2
			006100	
			107107	
			121503	
			904999	

MISSING ITEM NUMBERS NOT APPLICABLE

– ITEM NOT ILLUSTRATED

BOEING PROPRIETARY - Copyright © - Unpublished Work - See title page for details.

FIG ITEM	PART NUMBER	1 2 3 4 5 6 7 NOMENCLATURE	EFFECT FROM TO	UNITS PER ASSY
2				
80	BAC27NEX0173	..DECAL- PLACARD CONTENT: A	002004 006100 107107 121503 904999	1
85	BAC27NEX0174	..DECAL- PLACARD CONTENT: B	002004 006100 107107 121503 904999	1
90	BAC27NEX0175	..DECAL- PLACARD CONTENT: C	002004 006100 107107 121503 904999	1
95	BAC27NEX0176	..DECAL- PLACARD CONTENT: D	002004 006100 107107 121503 904999	1
100	BAC27NEX0646	..DECAL- PLACARD CONTENT: AP0032	002004 006100 107107 121503 904999	2
110	BAC27TEX0384	..DECAL- PLACARD CONTENT: 1 THRU 30	002004 006100 107107 121503 904999	1
115	BAC27NEX0657	..DECAL- PLACARD CONTENT: TB132	002004 006100 107107 121503 904999	1
120	BAC27NEX0938	..DECAL- PLACARD CONTENT: 1 THRU 11	002004 006100 107107 121503 904999	4

MISSING ITEM NUMBERS NOT APPLICABLE

– ITEM NOT ILLUSTRATED

BOEING PROPRIETARY - Copyright © - Unpublished Work - See title page for details.

FIG ITEM	PART NUMBER	1 2 3 4 5 6 7 NOMENCLATURE	EFFECT FROM TO	UNITS PER ASSY
2				
195	HL1050PB12-5	..BOLT	002004	2
		SUPPLIER CODE:	006100	
		V97928	107107	
		SPECIFICATION NUMBER:	121503	
		BACB30MB12-5	904999	
		OPTIONAL PART:		
		HL20PB12-5		
		V73197		
		HL20PB12-5		
		V92215		
		HL20PB12-5		
		V97928		
		69307-12-5		
		V56878		
		HL20PB12-5		
		V80539		
		L80612-5		
		V06725		
		HL20PB12-5		
		V60516		
		HL20PB12-5		
		V08524		
		HL20-12-5		
		V06725		
		HL20PB12-5		
		V56878		
		WC80612-5		
		V60516		
		HL1050PB12-5		
		V56878		
		HL1050PB12-5		
		V60516		
		HL1050PB12-5		
		V73197		
		HL1050PB12-5		
		V80539		
200	BACW10CT12	..WASHER	002004	2
			006100	
			107107	
			121503	
			904999	
205	AN960JD616L	..WASHER	107107	2
			121503	
			904949	
205	NAS1149D0616J	..WASHER	002004	2
			006100	
			950999	

MISSING ITEM NUMBERS NOT APPLICABLE

– ITEM NOT ILLUSTRATED

BOEING PROPRIETARY - Copyright © - Unpublished Work - See title page for details.

FIG ITEM	PART NUMBER	1 2 3 4 5 6 7 NOMENCLATURE	EFFECT FROM TO	UNITS PER ASSY
2				
210	AN960-616	..WASHER	107107 121503 904949	2
210	NAS1149D0663J	..WASHER	002004 006100 107107 121503 904999	2
215	MS21042L6	..NUT	002004 006100 107107 121503 904999	2
220	RBEJ40E22-48	..JUMPER ASSY SUPPLIER CODE: V1GK47 SPECIFICATION NUMBER: BACJ40E22-48 OPTIONAL PART: 740E22-48 V91812	002004 006100 107107 121503 904999	2
225	284N1365-29	..BRACKET	002004 006100 107107 121503 904999	1
		ATTACHING PARTS		
- 230	NAS1801-3-8	..SCREW	002004 006100 107107 121503 904999	2
		-------*-------		
245	BACC49A1	..CLAMP SUPPLIER CODE: V09922 SPECIFICATION NUMBER: BACC49A1 OPTIONAL PART: FAB278 V15805 H28-1 V34941 UP103 V6E102	107107 121503 904949	2

MISSING ITEM NUMBERS NOT APPLICABLE

- ITEM NOT ILLUSTRATED

BOEING PROPRIETARY - Copyright © - Unpublished Work - See title page for details.

FIG ITEM	PART NUMBER	1 2 3 4 5 6 7 NOMENCLATURE	EFFECT FROM TO	UNITS PER ASSY
2				
245	H49-2	..CLAMP SUPPLIER CODE: V34941 SPECIFICATION NUMBER: BACC49A2 OPTIONAL PART: MF104-2 V6E102	002004 006100 950999	2
255	AMY0580T3	..TRACK SUPPLIER CODE: V09922 SPECIFICATION NUMBER: BACT44A0580D ATTACHING PARTS	002004 006100 107107 121503 904999	1
- 260	NAS1801-3-8	..SCREW -------*-------	002004 006100 107107 121503 904999	2
265	H21-1	..SPACER SUPPLIER CODE: V34941 SPECIFICATION NUMBER: BACS18AR1 OPTIONAL PART: FAB276A V15805 YHLZ1C2 V09922	107107 121503 904999	AR
285	MS18029-2L15	..COVER ASSY	002004 006100 107107 121503 904999	1
310	MS27212-2-15	..TERMINAL BOARD ASSY ATTACHING PARTS	002004 006100 107107 121503 904999	1
- 315	NAS600-8P	..SCREW -------*-------	002004 006100 107107 121503 904999	3

MISSING ITEM NUMBERS NOT APPLICABLE

- ITEM NOT ILLUSTRATED

BOEING PROPRIETARY - Copyright © - Unpublished Work - See title page for details.

FIG ITEM	PART NUMBER	1 2 3 4 5 6 7 NOMENCLATURE	EFFECT FROM TO	UNITS PER ASSY
2				
335	284N1315-8	..ENCLOSURE ASSY	002004 006100 107107 121503 904999	1
340	YHLZG16-1	...BLOCK-GND SUPPLIER CODE: V09922	002004 006100 107107 121503 904999	1
345	YHLZG16-2	...BLOCK-GND SUPPLIER CODE: V09922	002004 006100 107107 121503 904999	1
		ATTACHING PARTS		
- 350	BACR15FT5D	...RIVET- SIZE DETERMINED ON INSTL.	002004 006100 107107 121503 904999	8
		-------*-------		
355	69B42314-1	...SUPPORT-RELAY	002004 006100 107107 121503 904999	1
		ATTACHING PARTS		
- 360	BACR15FT5D	...RIVET- SIZE DETERMINED ON INSTL.	002004 006100 107107 121503 904999	2
		-------*-------		
480	13421000-5	...ENCLOSURE- SUPPLIER CODE: V23296	002004 006100 107107 121503 904999	1
- 500	286N1138-001	..WIRE BUNDLE ASSY	107107 121503 904949	1
- 500	286N1138-004	..WIRE BUNDLE ASSY	002004 006100 950999	1

MISSING ITEM NUMBERS NOT APPLICABLE

- ITEM NOT ILLUSTRATED

BOEING PROPRIETARY - Copyright © - Unpublished Work - See title page for details.

FIG ITEM	PART NUMBER	1 2 3 4 5 6 7 NOMENCLATURE	EFFECT FROM TO	UNITS PER ASSY
2				
- 505	YHLZD33	...TERMINAL- SUPPLIER CODE: V09922 ELECTRICAL EQUIP NUMBER: TB0132A WIRING DIAGRAM REF: 242221	002004 006100 107107 904999	3
- 515	YHLZD33	...TERMINAL- SUPPLIER CODE: V09922 ELECTRICAL EQUIP NUMBER: TB0132A WIRING DIAGRAM REF: 242221	121503	4
- 520	YHLZR21	...COMPONENT- SUPPLIER CODE: V09922 ELECTRICAL EQUIP NUMBER: TB0132B WIRING DIAGRAM REF: 253111	002004 006100 950951	1
- 520	YHLZR22	...COMPONENT- SUPPLIER CODE: V09922 ELECTRICAL EQUIP NUMBER: TB0132B WIRING DIAGRAM REF: 253111	121503 904949 952999	1
- 535	YHLZ4	...MODULE- SUPPLIER CODE: V09922 SPECIFICATION NUMBER: BACM15C1B OPTIONAL PART: YHLZ44 V09922 ELECTRICAL EQUIP NUMBER: TB0132G WIRING DIAGRAM REF: 291112	002004 006100 950999	2

MISSING ITEM NUMBERS NOT APPLICABLE

- ITEM NOT ILLUSTRATED

BOEING PROPRIETARY - Copyright © - Unpublished Work - See title page for details.

FIG ITEM	PART NUMBER	1 2 3 4 5 6 7 NOMENCLATURE	EFFECT FROM TO	UNITS PER ASSY
2				
- 540	YHLZ16-2	...MODULE-	107107	1
		SUPPLIER CODE:	121503	
		V09922	904949	
		SPECIFICATION NUMBER:		
		BACM15C3A		
		OPTIONAL PART:		
		TBH120450		
		V58982		
		421120-450		
		V58982		
		ELECTRICAL EQUIP NUMBER:		
		TB0132X		
		WIRING DIAGRAM REF:		
		291112		
- 545	YHLZ16-4	...MODULE-	002004	4
		SUPPLIER CODE:	006100	
		V09922	107107	
		SPECIFICATION NUMBER:	121503	
		BACM15C3B	904999	
		OPTIONAL PART:		
		421120-452		
		V58982		
		TBH120452		
		V58982		
		ELECTRICAL EQUIP NUMBER:		
		TB0132Y		
		WIRING DIAGRAM REF:		
		242222		
550	BACC45FN12-12P	...CONNECTOR-	107107	1
		ELECTRICAL EQUIP NUMBER:	121503	
		D41320J	904949	
		WIRING DIAGRAM REF:		
		245131		
550	BACC45FN14-15P	...CONNECTOR-	002004	1
		ELECTRICAL EQUIP NUMBER:	006100	
		D41320J	950999	
		WIRING DIAGRAM REF:		
		245131		
555	BACC45FN18-31P7	...CONNECTOR-	011100	1
		ELECTRICAL EQUIP NUMBER:	107107	
		D40592J	121503	
		WIRING DIAGRAM REF:	904999	
		242221		
560	BACC45FN22-55S8	...CONNECTOR-	107107	1
		ELECTRICAL EQUIP NUMBER:	121503	
		D40394J	904949	
		WIRING DIAGRAM REF:		
		242222		

MISSING ITEM NUMBERS NOT APPLICABLE

– ITEM NOT ILLUSTRATED

BOEING PROPRIETARY - Copyright © - Unpublished Work - See title page for details.

FIG ITEM	PART NUMBER	1 2 3 4 5 6 7 NOMENCLATURE	EFFECT FROM TO	UNITS PER ASSY
2				
565	BACC45FN22-32S9	...RECEPTACLE-	002004	1
		ELECTRICAL EQUIP NUMBER:	006100	
		D41316J	107107	
		WIRING DIAGRAM REF:	121503	
		242121	904999	
- 600	286N2370-001	WIRE BUNDLE ASSY	002004	1
			006100	
			107107	
			950999	
- 600	286N2370-002	WIRE BUNDLE ASSY	121503	1
			904949	
605	C0909A12-12S102	.CONNECTOR-	107107	1
		SUPPLIER CODE:	121503	
		V13556	904949	
		SPECIFICATION NUMBER:		
		BACC63BN12-12S		
		OPTIONAL PART:		
		48-63N12-12S		
		V02660		
		C0909A12-12SN		
		V13556		
		ELECTRICAL EQUIP NUMBER:		
		D41320P		
		WIRING DIAGRAM REF:		
		245131		
605	BACC45FT14-15S	.CONNECTOR-	002004	1
		ELECTRICAL EQUIP NUMBER:	006100	
		D41320P	950999	
		WIRING DIAGRAM REF:		
		245131		
- 610	286N2070-003	WIRE BUNDLE ASSY	121503	1
			904949	
- 610	286N2070-004	WIRE BUNDLE ASSY	107107	1
- 610	286N2070-005	WIRE BUNDLE ASSY-	002004	1
			006100	
			950999	
615	BACC45FT18-31S7	.PLUG-	002004	1
		ELECTRICAL EQUIP NUMBER:	006100	
		D40592P	107107	
		WIRING DIAGRAM REF:	121503	
		242221	904999	
- 620	286N4502-002	WIRE BUNDLE ASSY	121503	1
			904949	
- 620	286N4502-003	WIRE BUNDLE ASSY	002004	1
			006100	
			950999	

MISSING ITEM NUMBERS NOT APPLICABLE

- ITEM NOT ILLUSTRATED

BOEING PROPRIETARY - Copyright © - Unpublished Work - See title page for details.

FIG ITEM	PART NUMBER	1 2 3 4 5 6 7 NOMENCLATURE	EFFECT FROM TO	UNITS PER ASSY
2				
625	BACC45FT22-55P8	.CONNECTOR-	002004	1
		ELECTRICAL EQUIP NUMBER:	006100	
		D40394P	107107	
		WIRING DIAGRAM REF:	121503	
		242212	904999	
630	BACC45FT22-32S9	.RECEPTACLE-	002004	1
		ELECTRICAL EQUIP NUMBER:	006100	
		D41316P	107107	
		WIRING DIAGRAM REF:	121503	
		242212	904999	
- 640	286N2014-002	WIRE BUNDLE ASSY	107107	1
			121503	
			904949	
- 640	286N2014-003	WIRE BUNDLE ASSY	002004	1
			006100	
			950999	
655	BACC45FT14-7P6	.PLUG-	002004	1
		ELECTRICAL EQUIP NUMBER:	006100	
		D41712P	107107	
		WIRING DIAGRAM REF:	121503	
		245121	904999	

MISSING ITEM NUMBERS NOT APPLICABLE

- ITEM NOT ILLUSTRATED

BOEING PROPRIETARY - Copyright © - Unpublished Work - See title page for details.

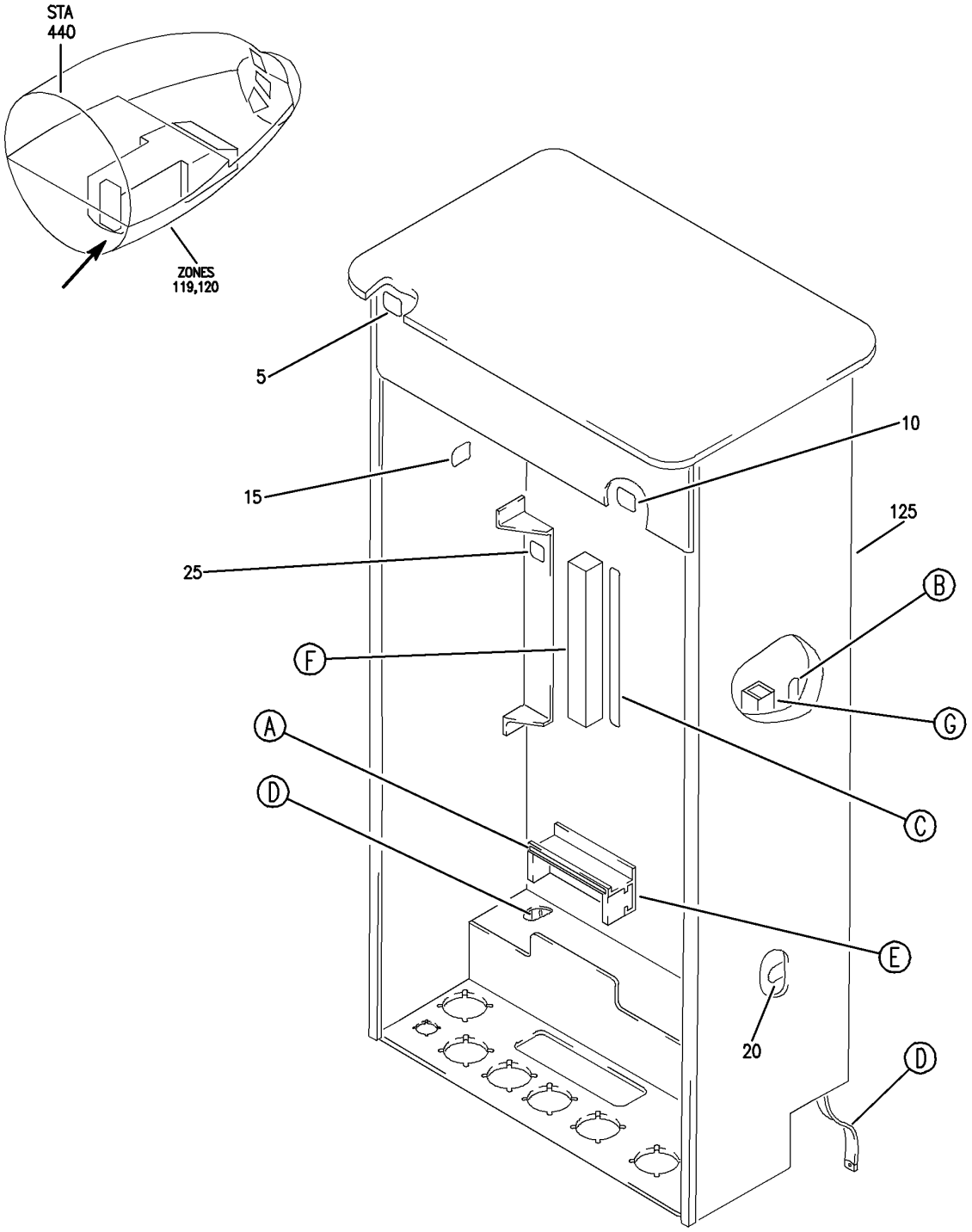

Y 31013210 SHT 1 REV 228

PANEL ASSY-P32 PWR PNL (ELECTRICAL/ELECTRONIC PANELS ONLY)
FIGURE 10 (SHEET 1)

BOEING PROPRIETARY - Copyright © - Unpublished Work - See title page for details.

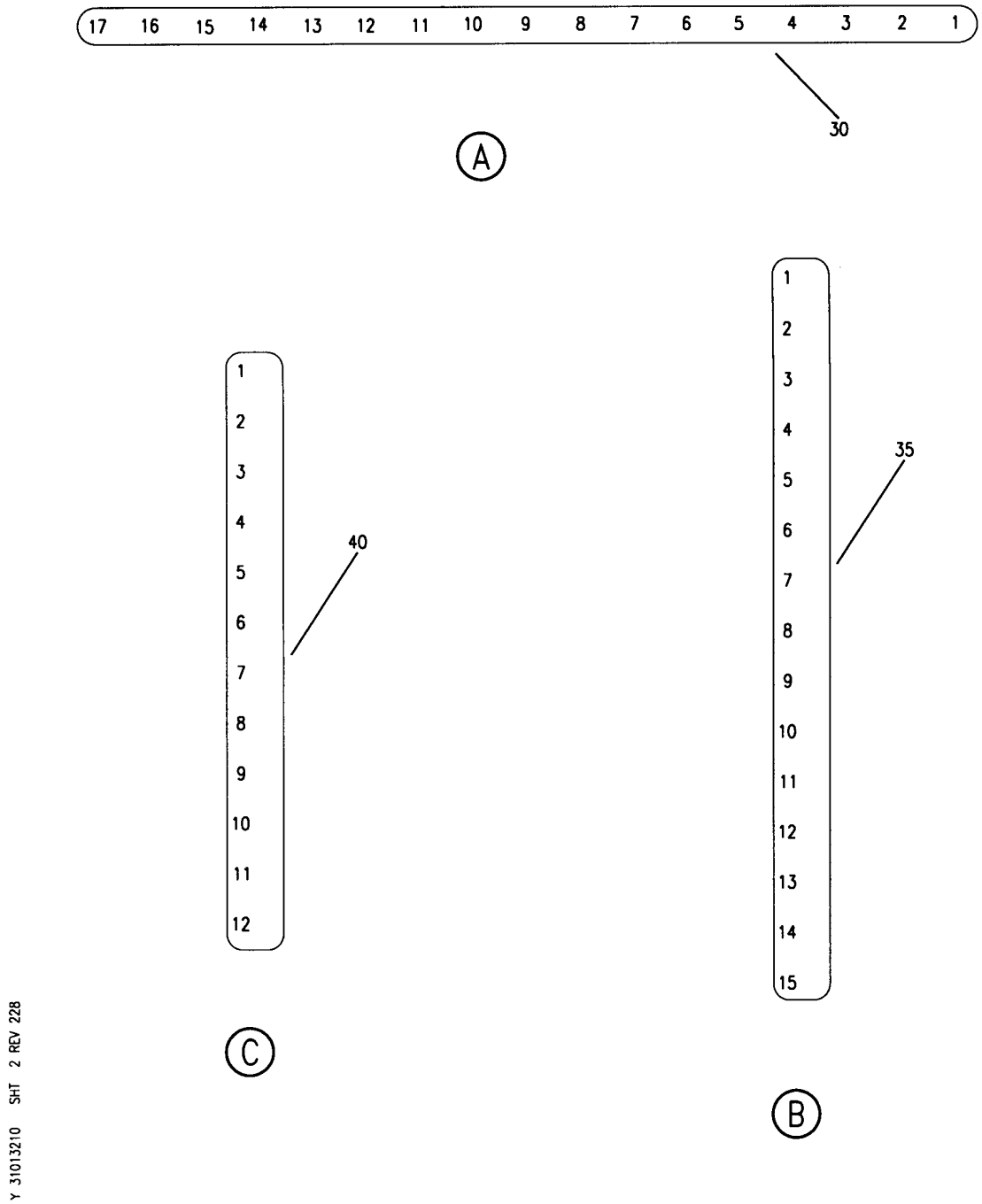

PANEL ASSY-P32 PWR PNL (ELECTRICAL/ELECTRONIC PANELS ONLY)
FIGURE 10 (SHEET 2)

BOEING PROPRIETARY - Copyright © - Unpublished Work - See title page for details.

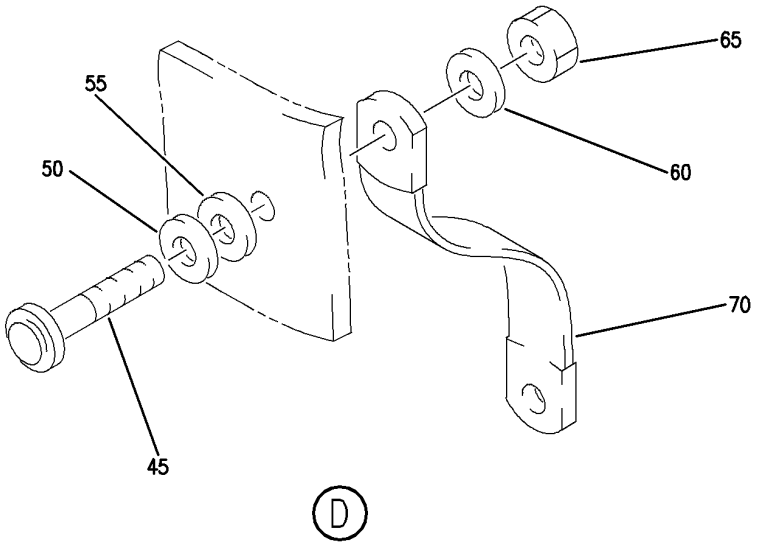

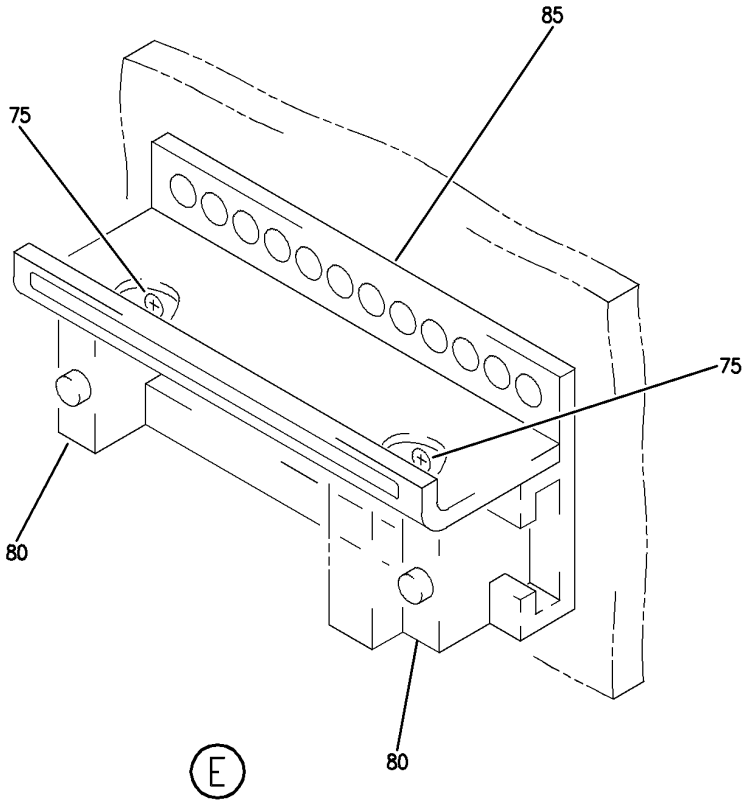

Y 31013210 SHT 3 REV 228

PANEL ASSY-P32 PWR PNL (ELECTRICAL/ELECTRONIC PANELS ONLY)
FIGURE 10 (SHEET 3)

BOEING PROPRIETARY - Copyright © - Unpublished Work - See title page for details.

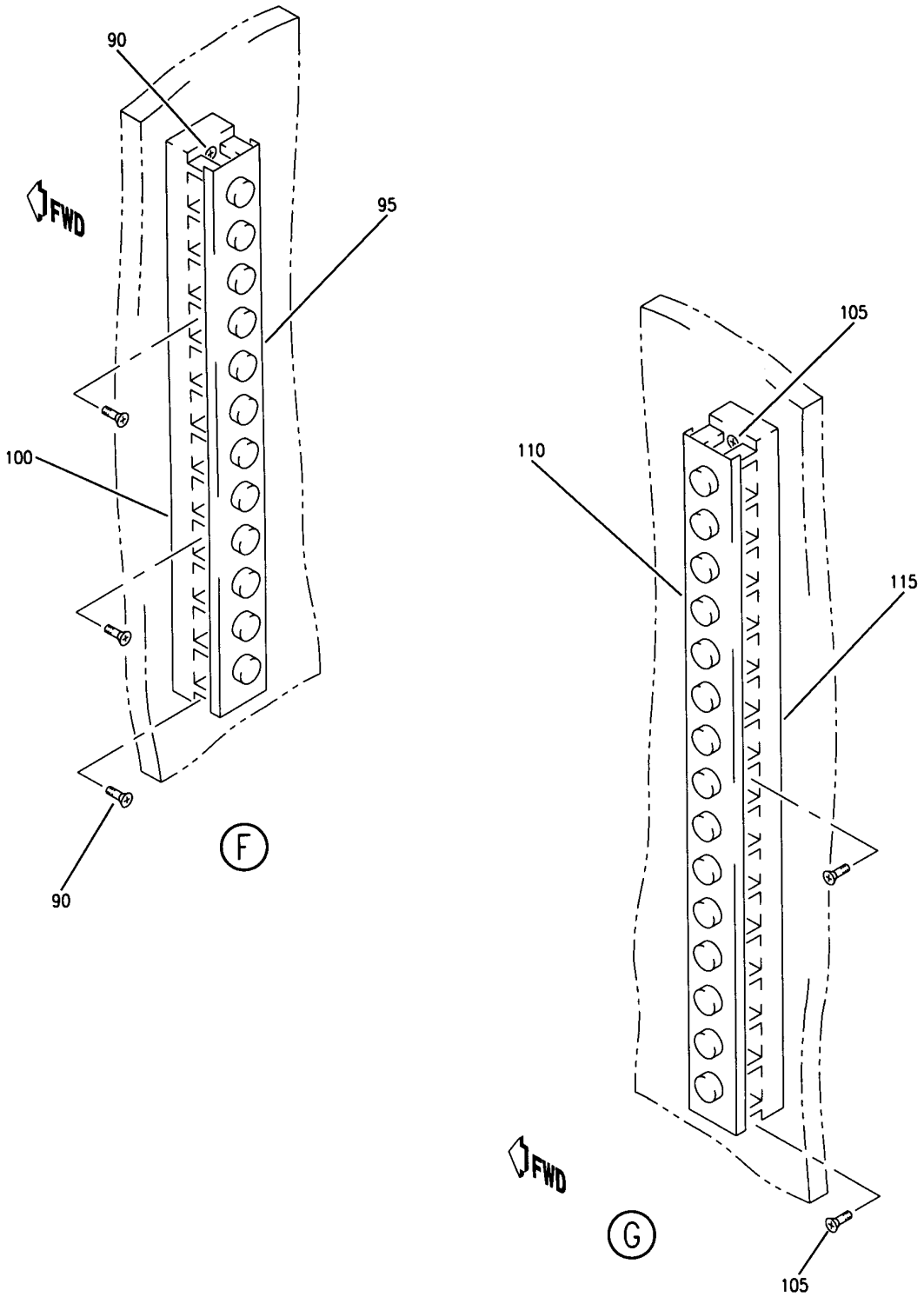

PANEL ASSY-P32 PWR PNL (ELECTRICAL/ELECTRONIC PANELS ONLY)
FIGURE 10 (SHEET 4)

BOEING PROPRIETARY - Copyright © - Unpublished Work - See title page for details.

FIG ITEM	PART NUMBER	1 2 3 4 5 6 7 NOMENCLATURE	EFFECT FROM TO	UNITS PER ASSY
10				
		PANEL ASSY-P32 PWR PNL (ELECTRICAL/ELECTRONIC PANELS ONLY)	108120	
- 1	284N1315-122	PANEL ASSY-P32 PWR PNL (ELECTRICAL/ELECTRONIC PANELS ONLY) FOR NHA/OTHER SYS DET SEE: 24-00-58-05C	108120	RF
5	BAC27NEX0173	.DECAL- PLACARD CONTENT: A	108120	1
10	BAC27NEX0174	.DECAL- PLACARD CONTENT: B	108120	1
15	BAC27NEX0175	.DECAL- PLACARD CONTENT: C	108120	1
20	BAC27NEX0176	.DECAL- PLACARD CONTENT: D	108120	1
25	BAC27NEX0247	.DECAL- PLACARD CONTENT: E	108120	1
30	BAC27TEX1267	.DECAL- PLACARD CONTENT: 1 THRU 17	108120	1
35	BAC27NEX2904	.DECAL	108120	1
40	BAC27NEX2917	.DECAL	108120	1

MISSING ITEM NUMBERS NOT APPLICABLE

- ITEM NOT ILLUSTRATED

BOEING PROPRIETARY - Copyright © - Unpublished Work - See title page for details.

FIG ITEM	PART NUMBER	1 2 3 4 5 6 7 NOMENCLATURE	EFFECT FROM TO	UNITS PER ASSY
10				
45	HL1050PB12-5	.BOLT	108120	2
		SUPPLIER CODE:		
		V97928		
		SPECIFICATION NUMBER:		
		BACB30MB12-5		
		OPTIONAL PART:		
		HL20PB12-5		
		V73197		
		HL20PB12-5		
		V92215		
		HL20PB12-5		
		V97928		
		69307-12-5		
		V56878		
		HL20PB12-5		
		V80539		
		L80612-5		
		V06725		
		HL20PB12-5		
		V60516		
		HL20PB12-5		
		V08524		
		HL20-12-5		
		V06725		
		HL20PB12-5		
		V56878		
		WC80612-5		
		V60516		
		HL1050PB12-5		
		V56878		
		HL1050PB12-5		
		V60516		
		HL1050PB12-5		
		V73197		
		HL1050PB12-5		
		V80539		
50	BACW10CT12	.WASHER	108120	2
55	NAS1149D0616J	.WASHER	108120	2
60	NAS1149D0663J	.WASHER	108120	2
65	PLH56CD	.NUT	108120	2
		SUPPLIER CODE:		
		VF0224		
		SPECIFICATION NUMBER:		
		BACN10YR6CD		
		OPTIONAL PART:		
		H52732-6CD		
		V15653		

MISSING ITEM NUMBERS NOT APPLICABLE

— ITEM NOT ILLUSTRATED

BOEING PROPRIETARY - Copyright © - Unpublished Work - See title page for details.

FIG ITEM	PART NUMBER	1 2 3 4 5 6 7 NOMENCLATURE	EFFECT FROM TO	UNITS PER ASSY
10				
70	RBEJ40E22-48	.JUMPER ASSY	108120	2
		SUPPLIER CODE:		
		V1GK47		
		SPECIFICATION NUMBER:		
		BACJ40E22-48		
		OPTIONAL PART:		
		740E22-48		
		V91812		
75	NAS603-8P	.SCREW	108120	2
80	H49-2	.CLAMP	108120	2
		SUPPLIER CODE:		
		V34941		
		SPECIFICATION NUMBER:		
		BACC49A2		
		OPTIONAL PART:		
		MF104-2		
		V6E102		
85	AMY0580T3	.TRACK	108120	1
		SUPPLIER CODE:		
		V09922		
		SPECIFICATION NUMBER:		
		BACT44A0580D		
90	NAS600-8P	.SCREW	108120	4
95	MS18029-2L12	.COVER ASSY	108120	1
100	MS27212-2-12	.TERMINAL BOARD ASSY	108120	1
105	NAS600-8P	.SCREW	108120	3
110	MS18029-2L15	.COVER ASSY	108120	1
115	MS27212-2-15	.TERMINAL BOARD ASSY	108120	1
- 120	BACP20B43B	.PLUG-	108120	AR
		MISCELLANEOUS DATA:		
		(USE IN PLACE OF CIRCUIT		
		BREAKERS ON OPEN HOLES)		
125	13421000-6	.ENCLOSURE ASSY-	108120	1
		SUPPLIER CODE:		
		V23926		

MISSING ITEM NUMBERS NOT APPLICABLE

- ITEM NOT ILLUSTRATED

BOEING PROPRIETARY - Copyright © - Unpublished Work - See title page for details.

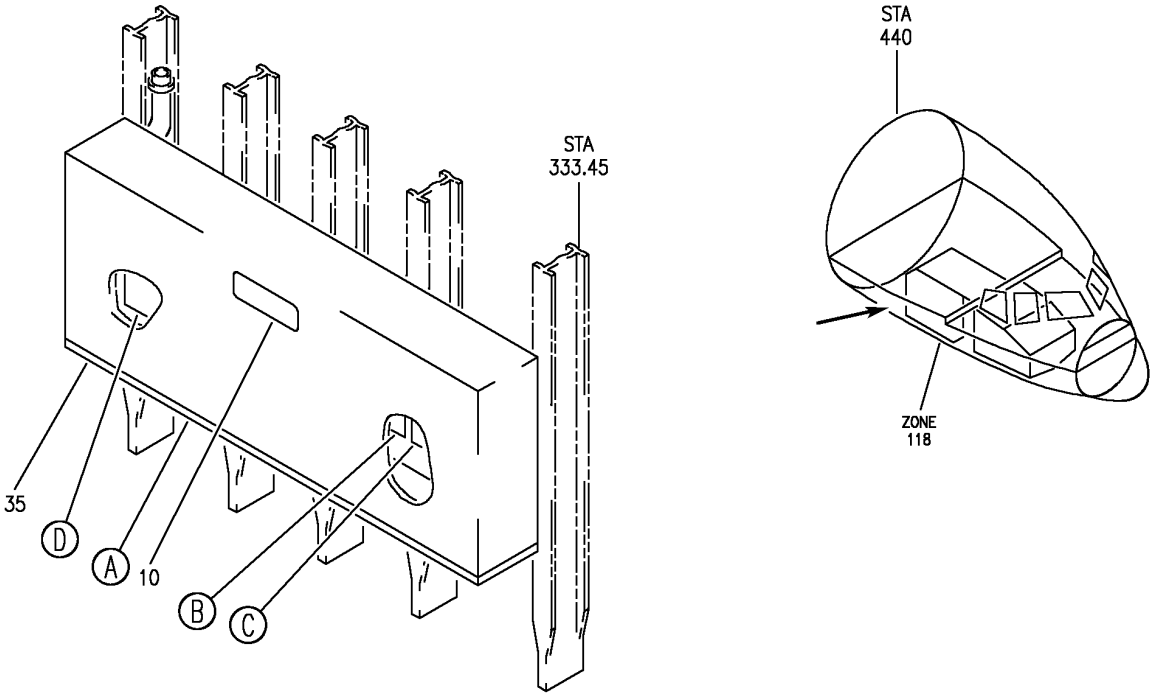

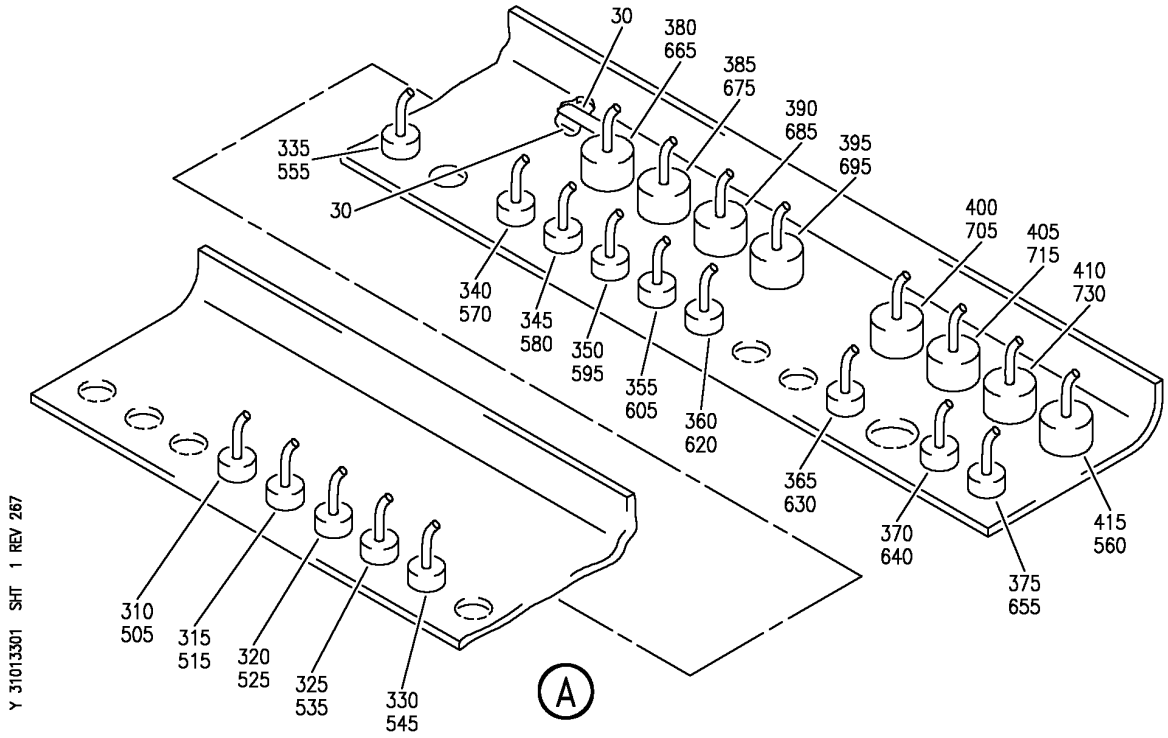

SHIELD INSTL-P33 MISC ELEC EQPT
FIGURE 1 (SHEET 1)

BOEING PROPRIETARY - Copyright © - Unpublished Work - See title page for details.

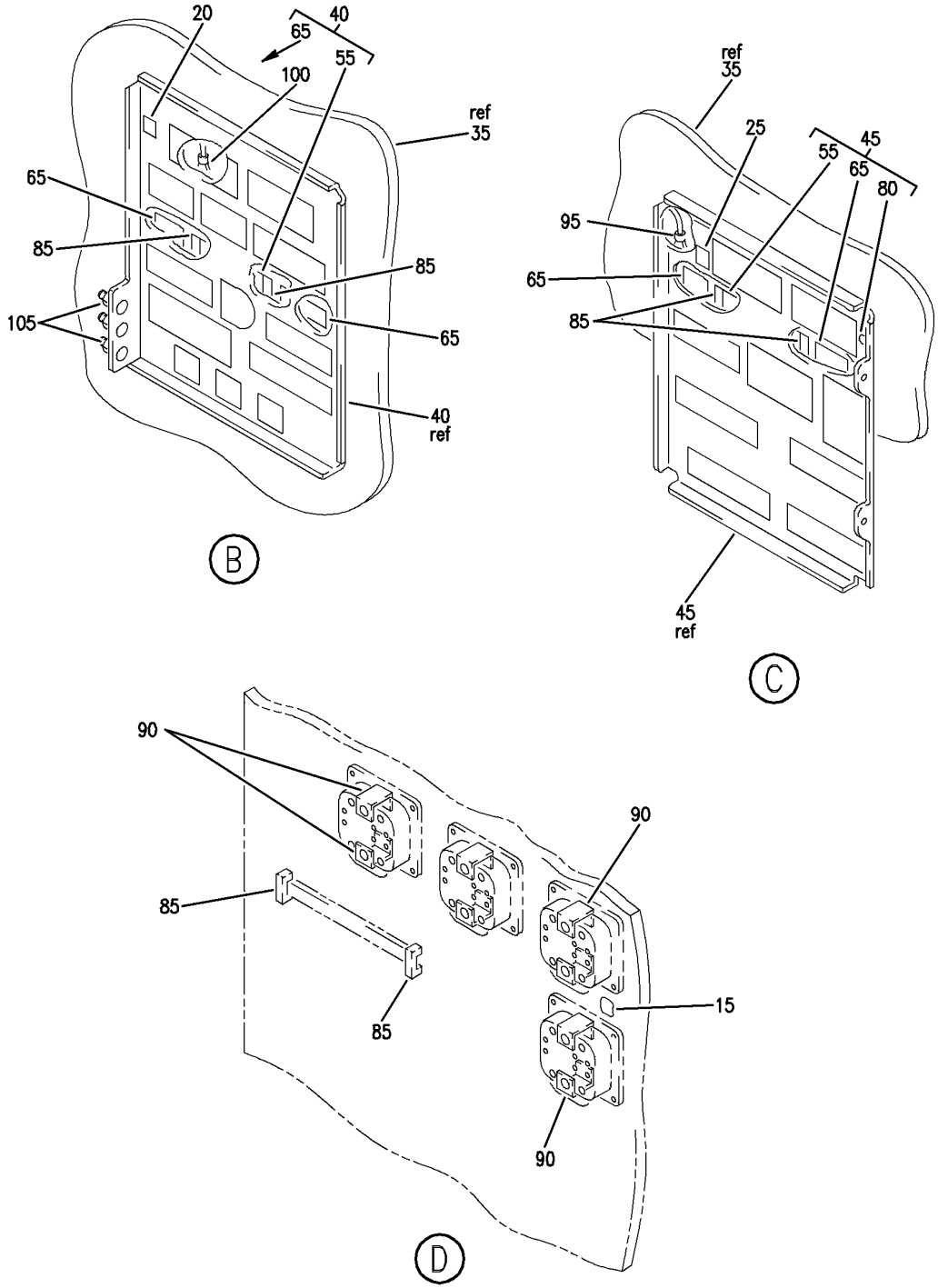

Y 31013301 SHT 2 REV 234

SHIELD INSTL-P33 MISC ELEC EQPT
FIGURE 1 (SHEET 2)

BOEING PROPRIETARY - Copyright © - Unpublished Work - See title page for details.

FIG ITEM	PART NUMBER	1 2 3 4 5 6 7 NOMENCLATURE	EFFECT FROM TO	UNITS PER ASSY
1		SHIELD INSTL-P33 MISC ELEC EQPT	101102 108120 504903	
- 1	284N1318-103	SHIELD INSTL-P33 MISC ELEC EQPT FOR NHA SEE: 24-00-58-05C	101102 108120	RF
- 1	284N1318-104	SHIELD INSTL-P33 MISC ELEC EQPT FOR NHA SEE: 24-00-58-05C	504903	RF
- 5	284N1318-1000	.PACKAGE ASSY-OPTION REWORKED BY ALERT SB: 28A0105R1 FUNCTIONAL REFERENCE: ELECTRICAL POWER FOR DETAILS SEE 24-53-71-03A FIRE PROTECTION FOR DETAILS SEE 26-15-71-01A FLIGHT CONTROL FOR DETAILS SEE 27-51-71-01A 27-81-71-01A FUEL FOR DETAILS SEE 28-21-71-01A 28-22-71-01A 28-26-71-01A HYDRAULIC POWER FOR DETAILS SEE 29-11-71-01A 29-21-71-03A 29-22-71-01A ICE & RAIN PROTECTION FOR DETAILS SEE 30-31-71-03A 30-32-71-03A LIGHTS FOR DETAILS SEE 33-42-71-02A PLACARDS AND MARKINGS FOR DETAILS SEE 11-36-06-01	101102 108120 504903	1
10	BAC27TEX0222	..DECAL- PLACARD CONTENT: P33 PANEL MISC ELEC EQPT	101102 108120 504903	1

MISSING ITEM NUMBERS NOT APPLICABLE

- ITEM NOT ILLUSTRATED

BOEING PROPRIETARY - Copyright © - Unpublished Work - See title page for details.

FIG ITEM	PART NUMBER	1 2 3 4 5 6 7 NOMENCLATURE	EFFECT FROM TO	UNITS PER ASSY
1				
15	BAC27NEX0173	..DECAL-	101102	1
		PLACARD CONTENT:	108120	
		A	504903	
20	BAC27NEX0175	..DECAL-	101102	1
		PLACARD CONTENT:	108120	
		C	504903	
25	BAC27NEX0176	..DECAL-	101102	1
		PLACARD CONTENT:	108120	
		D	504903	
30	BAC27NEX0593	..DECAL-	101102	2
		PLACARD CONTENT:	108120	
		AP0033	504903	
35	13431000-5	..ENCLOSURE ASSY-	101102	1
		SUPPLIER CODE:	108120	
		V23296	504903	
40	284N1373-185	..PLATE ASSY-MTG	101102	1
			108120	
			504903	
45	284N1373-181	..PLATE ASSY-MTG	101102	1
			108120	
			504903	
		ATTACHING PARTS		
- 50	NAS1801-3-7	..SCREW	101102	4
			108120	
			504903	
		-------*-------		
55	AMY0450T5	...TRACK	101102	1
		SUPPLIER CODE:	108120	
		V09922	504903	
		SPECIFICATION NUMBER:		
		BACT44B0450U		
		ATTACHING PARTS		
- 60	BACR15BA4D	...RIVET-	101102	2
		SIZE DETERMINED ON INSTL.	108120	
			504903	
		-------*-------		
65	YHLZG16-1	...BLOCK-GND	101102	2
		SUPPLIER CODE:	108120	
		V09922	504903	
		ATTACHING PARTS		
- 70	BACR15BB5AD	...RIVET-	101102	8
		SIZE DETERMINED ON INSTL.	108120	
		USED ON:	504903	
		284N1373-181		
- 75	BACR15FT4D	...RIVET-	101102	8
		SIZE DETERMINED ON INSTL.	108120	
		USED ON:	504903	
		284N1373-185		
		-------*-------		

MISSING ITEM NUMBERS NOT APPLICABLE

- ITEM NOT ILLUSTRATED

BOEING PROPRIETARY - Copyright © - Unpublished Work - See title page for details.

FIG ITEM	PART NUMBER	1 2 3 4 5 6 7 NOMENCLATURE	EFFECT FROM TO	UNITS PER ASSY
1				
80	RR2002-3B3	...GROMMET-	101102	1
		SUPPLIER CODE:	108120	
		V57268	504903	
		SPECIFICATION NUMBER:		
		BACG20AF3B3		
		OPTIONAL PART:		
		SZ6924-3B3		
		V95272		
		701-3B3		
		V07096		
		E3B3		
		V60980		
		H3B3		
		V60980		
		G6940-3B3		
		V75345		
		USED ON:		
		284N1373-181		
85	H49-2	..CLAMP	101102	6
		SUPPLIER CODE:	108120	
		V34941	504903	
		SPECIFICATION NUMBER:		
		BACC49A2		
		OPTIONAL PART:		
		MF104-2		
		V6E102		
90	66-22661-2	..BARRIER-TERM.	101102	8
			108120	
			504903	
95	287N1404-4	..JUMPER ASSY-BONDING	101102	1
			108120	
			504903	
100	287N1404-6	..JUMPER-BONDING	101102	1
			108120	
			504903	
105	MS21042L3	..NUT	101102	3
			108120	
			504903	
- 150	284N1318-1001	.PACKAGE ASSY-OPTION	504903	1
		FOR DETAILS SEE:		
		33-42-02-02		
- 300	286N1230-303	WIRE BUNDLE ASSY	101102	RF
- 305	286N1230-322	WIRE BUNDLE ASSY	504903	RF
- 305	286N1230-323	WIRE BUNDLE ASSY	108120	RF
310	BACC45FN22-12P6	.RECEPTACLE-	101102	1
		ELECTRICAL EQUIP NUMBER:	108120	
		D41418J	504903	
		WIRING DIAGRAM REF:		
		278111		

MISSING ITEM NUMBERS NOT APPLICABLE

- ITEM NOT ILLUSTRATED

BOEING PROPRIETARY - Copyright © - Unpublished Work - See title page for details.

FIG ITEM	PART NUMBER	1 2 3 4 5 6 7 NOMENCLATURE	EFFECT FROM TO	UNITS PER ASSY
1				
315	BACC45FN18-8P8	.RECEPTACLE- ELECTRICAL EQUIP NUMBER: D42094J WIRING DIAGRAM REF: 292131	101102 108120 504903	1
320	BACC45FN20-39P	.RECEPTACLE- ELECTRICAL EQUIP NUMBER: D41410J WIRING DIAGRAM REF: 282221	101102 108120 504903	1
325	BACC45FN14-12S7	.RECEPTACLE- ELECTRICAL EQUIP NUMBER: D42030J WIRING DIAGRAM REF: 282231	101102 108120 504903	1
330	BACC45FN16-24S9	.RECEPTACLE- ELECTRICAL EQUIP NUMBER: D41096J WIRING DIAGRAM REF: 261512	101102 108120 504903	1
345	BACC45FN14-15P9	.CONNECTOR- ELECTRICAL EQUIP NUMBER: D41420J WIRING DIAGRAM REF: 282111	101102 108120 504903	1
350	BACC45FN18-8P6	.CONNECTOR- ELECTRICAL EQUIP NUMBER: D41426J WIRING DIAGRAM REF: 261512	101102 108120 504903	1
355	BACC45FN18-14P8	.CONNECTOR- ELECTRICAL EQUIP NUMBER: D41422J WIRING DIAGRAM REF: 282111	101102 108120 504903	1
360	BACC45FN18-31P	.CONNECTOR- ELECTRICAL EQUIP NUMBER: D42006J WIRING DIAGRAM REF: 282231	101102 108120 504903	1
365	BACC45FN14-15P6	.CONNECTOR- ELECTRICAL EQUIP NUMBER: D41950J WIRING DIAGRAM REF: 282221	101102 108120 504903	1

MISSING ITEM NUMBERS NOT APPLICABLE

– ITEM NOT ILLUSTRATED

BOEING PROPRIETARY - Copyright © - Unpublished Work - See title page for details.

FIG ITEM	PART NUMBER	1 2 3 4 5 6 7 NOMENCLATURE	EFFECT FROM TO	UNITS PER ASSY
1				
370	BACC45FN16-10S	.CONNECTOR- ELECTRICAL EQUIP NUMBER: D41722J WIRING DIAGRAM REF: 282211	101102 108120 504903	1
375	BACC45FN16-24S7	.CONNECTOR- ELECTRICAL EQUIP NUMBER: D41626J WIRING DIAGRAM REF: 284114	101102 108120 504903	1
380	BACC45FN18-31P8	.CONNECTOR- ELECTRICAL EQUIP NUMBER: D41870J WIRING DIAGRAM REF: 282211	101102 108120 504903	1
385	BACC45FN22-32S	.CONNECTOR- ELECTRICAL EQUIP NUMBER: D41704J WIRING DIAGRAM REF: 284114	101102 108120 504903	1
390	BACC45FN22-19P7	.CONNECTOR- ELECTRICAL EQUIP NUMBER: D41416J WIRING DIAGRAM REF: 282211	101102 108120 504903	1
395	BACC45FN22-55P9	.CONNECTOR- ELECTRICAL EQUIP NUMBER: D41414J WIRING DIAGRAM REF: 282231	101102 108120 504903	1
400	BACC45FN22-32P	.CONNECTOR- ELECTRICAL EQUIP NUMBER: D41424J WIRING DIAGRAM REF: 282111	101102 108120 504903	1
405	BACC45FN20-25S7	.RECEPTACLE- ELECTRICAL EQUIP NUMBER: D41692J WIRING DIAGRAM REF: 275121	101102 108120 504903	1
410	BACC45FN22-55S9	.RECEPTACLE- ELECTRICAL EQUIP NUMBER: D41718J WIRING DIAGRAM REF: 282611	101102 108120 504903	1

MISSING ITEM NUMBERS NOT APPLICABLE

– ITEM NOT ILLUSTRATED

BOEING PROPRIETARY - Copyright © - Unpublished Work - See title page for details.

FIG ITEM	PART NUMBER	1 2 3 4 5 6 7 NOMENCLATURE	EFFECT FROM TO	UNITS PER ASSY
1				
415	BACC45FN22-55P6	.CONNECTOR-	101102	1
		ELECTRICAL EQUIP NUMBER:	108120	
		D41412J	504903	
		WIRING DIAGRAM REF:		
		291112		
- 500	286N2244-303	WIRE BUNDLE ASSY	101102	RF
			108120	
- 500	286N2244-314	WIRE BUNDLE ASSY	504903	RF
505	BACC45FT22-12S6	.PLUG-	101102	1
		ELECTRICAL EQUIP NUMBER:	108120	
		D41418P	504903	
		WIRING DIAGRAM REF:		
		275111		
- 510	286N4220-305	WIRE BUNDLE ASSY	101102	RF
- 510	286N4220-312	WIRE BUNDLE ASSY	504903	RF
- 510	286N4220-320	WIRE BUNDLE ASSY	108120	RF
515	BACC45FT18-8S8	.PLUG-	101102	1
		ELECTRICAL EQUIP NUMBER:	108120	
		D42094P	504903	
		WIRING DIAGRAM REF:		
		292131		
- 520	286N2064-341	WIRE BUNDLE ASSY	504903	RF
- 520	286N2064-342	WIRE BUNDLE ASSY	101102	RF
- 520	286N2064-343	WIRE BUNDLE ASSY	108120	RF
525	BACC45FT20-39S	.CONNECTOR-	101102	1
		ELECTRICAL EQUIP NUMBER:	108120	
		D41410P	504903	
		WIRING DIAGRAM REF:		
		334211		
- 530	286N2042-302	WIRE BUNDLE ASSY	101102	RF
			108120	
- 530	286N2042-304	WIRE BUNDLE ASSY	504903	RF
535	BACC45FT14-12P7	.PLUG-	101102	1
		ELECTRICAL EQUIP NUMBER:	108120	
		D42030P	504903	
		WIRING DIAGRAM REF:		
		303111		
- 540	286N2150-308	WIRE BUNDLE ASSY	101102	RF
			108120	
- 540	286N2150-309	WIRE BUNDLE ASSY	504903	RF
545	BACC45FT16-24P9	.CONNECTOR-	101102	1
		ELECTRICAL EQUIP NUMBER:	108120	
		D41096P	504903	
		WIRING DIAGRAM REF:		
		261512		
- 551	286N2070-335	WIRE BUNDLE ASSY	101102	RF
- 551	286N2070-337	WIRE BUNDLE ASSY	108120	RF
- 551	286N2070-340	WIRE BUNDLE ASSY	504903	RF

MISSING ITEM NUMBERS NOT APPLICABLE

- ITEM NOT ILLUSTRATED

BOEING PROPRIETARY - Copyright © - Unpublished Work - See title page for details.

FIG ITEM	PART NUMBER	1 2 3 4 5 6 7 NOMENCLATURE	EFFECT FROM TO	UNITS PER ASSY
1				
560	BACC45FT22-55S6	.CONNECTOR-	101102	1
		ELECTRICAL EQUIP NUMBER:	108120	
		D41412P	504903	
		WIRING DIAGRAM REF:		
		334211		
- 575	286N2260-303	WIRE BUNDLE ASSY	101102	RF
			108120	
- 575	286N2260-309	WIRE BUNDLE ASSY	504903	RF
580	BACC45FT14-15S9	.CONNECTOR-	101102	1
		ELECTRICAL EQUIP NUMBER:	108120	
		D41420P	504903	
		WIRING DIAGRAM REF:		
		282111		
- 590	286N2358-333	WIRE BUNDLE ASSY	504903	RF
- 590	286N2358-334	WIRE BUNDLE ASSY	101102	RF
- 590	286N2358-335	WIRE BUNDLE ASSY	108120	RF
595	BACC45FT18-8S6	.CONNECTOR-	101102	1
		ELECTRICAL EQUIP NUMBER:	108120	
		D41426P	504903	
		WIRING DIAGRAM REF:		
		282221		
- 600	286N2350-329	WIRE BUNDLE ASSY	101101	RF
- 600	286N2350-330	WIRE BUNDLE ASSY	102102	RF
- 601	286N2350-334	WIRE BUNDLE ASSY	504903	RF
- 601	286N2350-351	WIRE BUNDLE ASSY	108120	RF
605	BACC45FT18-14S8	.RECEPTACLE-	101102	1
		ELECTRICAL EQUIP NUMBER:	108120	
		D41422P	504903	
		WIRING DIAGRAM REF:		
		282211		
- 615	286N4228-329	WIRE BUNDLE ASSY	101102	RF
- 615	286N4228-340	WIRE BUNDLE ASSY	504903	RF
- 616	286N4228-355	WIRE BUNDLE ASSY	108120	RF
620	BACC45FT18-31S	.CONNECTOR-	101102	1
		ELECTRICAL EQUIP NUMBER:	108120	
		D42006P	504903	
		WIRING DIAGRAM REF:		
		282221		
- 625	286N4236-326	WIRE BUNDLE ASSY	101102	RF
- 625	286N4236-340	WIRE BUNDLE ASSY	504903	RF
- 626	286N4236-346	WIRE BUNDLE ASSY	108120	RF
630	BACC45FT14-15S6	.PLUG-	101102	1
		ELECTRICAL EQUIP NUMBER:	108120	
		D41950P	504903	
		WIRING DIAGRAM REF:		
		282221		
- 635	286N4212-323	WIRE BUNDLE ASSY-	504903	RF
		REWORKED BY ALERT SB:		
		27A0130		

MISSING ITEM NUMBERS NOT APPLICABLE

- ITEM NOT ILLUSTRATED

BOEING PROPRIETARY - Copyright © - Unpublished Work - See title page for details.

FIG ITEM	PART NUMBER	1 2 3 4 5 6 7 NOMENCLATURE	EFFECT FROM TO	UNITS PER ASSY
1				
- 636	286N4212-335	WIRE BUNDLE ASSY	108120	RF
- 636	286N4212-344	WIRE BUNDLE ASSY-	101102	RF
		REWORKED BY ALERT SB:		
		27A0130		
640	BACC45FT16-10P	.CONNECTOR-	101102	1
		ELECTRICAL EQUIP NUMBER:	108120	
		D41722P	504903	
		WIRING DIAGRAM REF:		
		282221		
- 650	286N4204-312	WIRE BUNDLE ASSY	504504	RF
			506506	
- 650	286N4204-316	WIRE BUNDLE ASSY	101102	RF
- 650	286N4204-317	WIRE BUNDLE ASSY	505505	RF
			507903	
- 650	286N4204-319	WIRE BUNDLE ASSY	108120	RF
655	BACC45FT16-24P7	.PLUG-	101102	1
		ELECTRICAL EQUIP NUMBER:	108120	
		D41626P	504903	
		WIRING DIAGRAM REF:		
		334211		
- 660	286N2066-010	WIRE BUNDLE ASSY	504903	RF
- 660	286N2066-334	WIRE BUNDLE ASSY	101102	RF
- 661	286N2066-346	WIRE BUNDLE ASSY	108120	RF
665	BACC45FT18-31S8	.CONNECTOR-	101102	1
		ELECTRICAL EQUIP NUMBER:	108120	
		D41870P	504903	
		WIRING DIAGRAM REF:		
		282211		
- 670	286N4202-303	WIRE BUNDLE ASSY	101102	RF
			108120	
- 670	286N4202-313	WIRE BUNDLE ASSY	504903	RF
675	BACC45FT22-32P	.PLUG-	101102	1
		ELECTRICAL EQUIP NUMBER:	108120	
		D41704P	504903	
		WIRING DIAGRAM REF:		
		282211		
- 680	286N2256-303	WIRE BUNDLE ASSY	101102	RF
			108120	
- 680	286N2256-317	WIRE BUNDLE ASSY	504903	RF
685	BACC45FT22-19S7	.PLUG-	101102	1
		ELECTRICAL EQUIP NUMBER:	108120	
		D41416P	504903	
		WIRING DIAGRAM REF:		
		282211		
- 690	286N2078-328	WIRE BUNDLE ASSY	504903	RF
- 690	286N2078-330	WIRE BUNDLE ASSY	101102	RF
- 691	286N2078-331	WIRE BUNDLE ASSY	108120	RF

MISSING ITEM NUMBERS NOT APPLICABLE

- ITEM NOT ILLUSTRATED

BOEING PROPRIETARY - Copyright © - Unpublished Work - See title page for details.

FIG ITEM	PART NUMBER	1 2 3 4 5 6 7 NOMENCLATURE	EFFECT FROM TO	UNITS PER ASSY
1				
695	BACC45FT22-55S9	.PLUG-	101102	1
		ELECTRICAL EQUIP NUMBER:	108120	
		D41414P	504903	
		WIRING DIAGRAM REF:		
		332211		
- 700	286N2356-327	WIRE BUNDLE ASSY	504903	RF
- 700	286N2356-328	WIRE BUNDLE ASSY	101102	RF
- 701	286N2356-340	WIRE BUNDLE ASSY	108120	RF
705	BACC45FT22-32S	.CONNECTOR-	101102	1
		ELECTRICAL EQUIP NUMBER:	108120	
		D41424P	504903	
		WIRING DIAGRAM REF:		
		275121		
- 710	286N4208-307	WIRE BUNDLE ASSY	101102	RF
			108120	
- 710	286N4208-314	WIRE BUNDLE ASSY	504903	RF
715	BACC45FT20-25P7	.PLUG-	101102	1
		ELECTRICAL EQUIP NUMBER:	108120	
		D41692P	504903	
		WIRING DIAGRAM REF:		
		278111		
- 725	286N4216-321	WIRE BUNDLE ASSY-	504903	RF
		REWORKED BY ALERT SB:		
		24A0130		
- 726	286N4216-352	WIRE BUNDLE ASSY	108120	RF
- 727	286N4216-367	WIRE BUNDLE ASSY-	101102	RF
		REWORKED BY ALERT SB:		
		27A0130		
730	BACC45FT22-55P9	.CONNECTOR-	101102	1
		ELECTRICAL EQUIP NUMBER:	108120	
		D41718P	504903	
		WIRING DIAGRAM REF:		
		282121		

MISSING ITEM NUMBERS NOT APPLICABLE

- ITEM NOT ILLUSTRATED

BOEING PROPRIETARY - Copyright © - Unpublished Work - See title page for details.

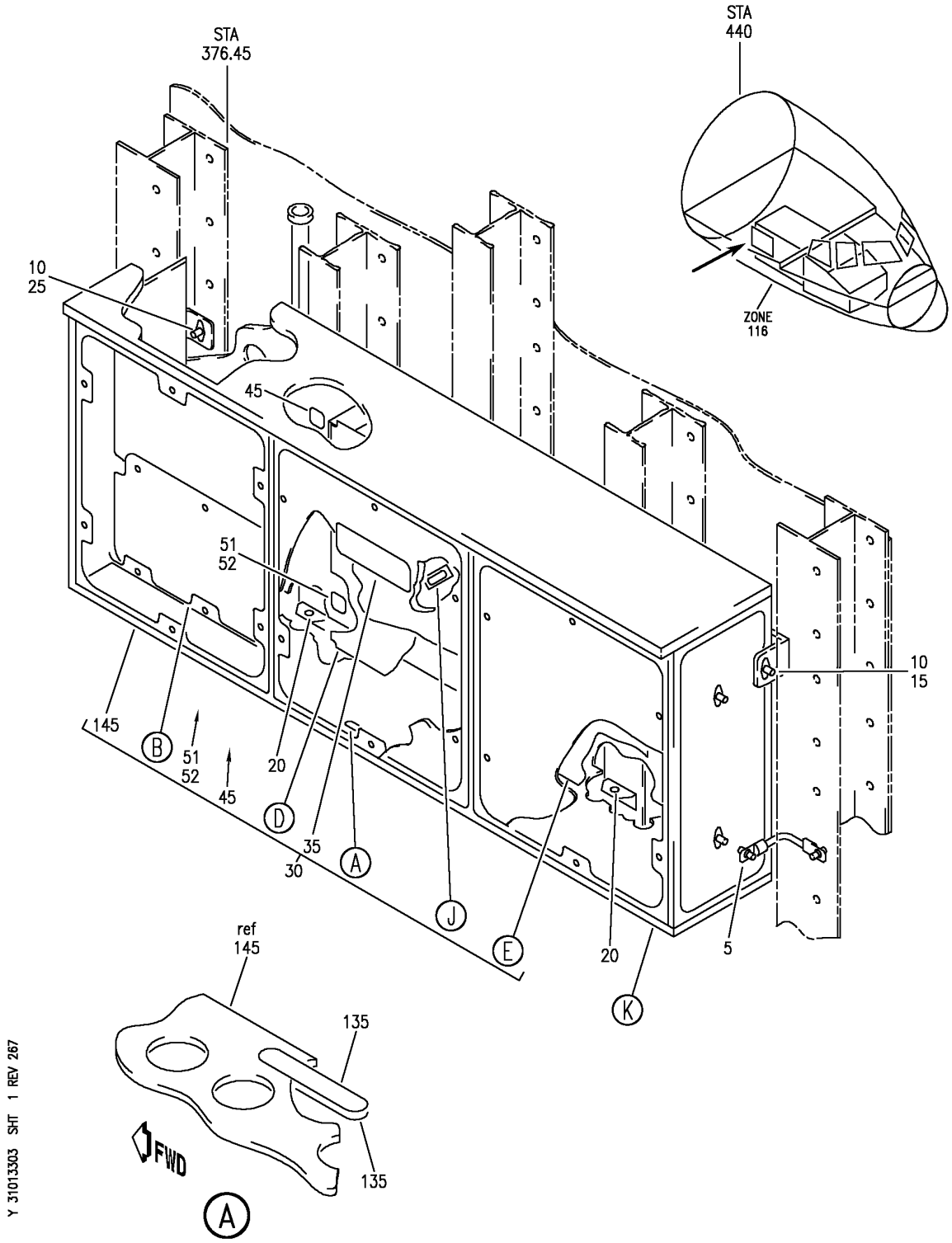

SHIELD INSTL-P33 MISC ELEC EQPT
FIGURE 3 (SHEET 1)

BOEING PROPRIETARY - Copyright © - Unpublished Work - See title page for details.

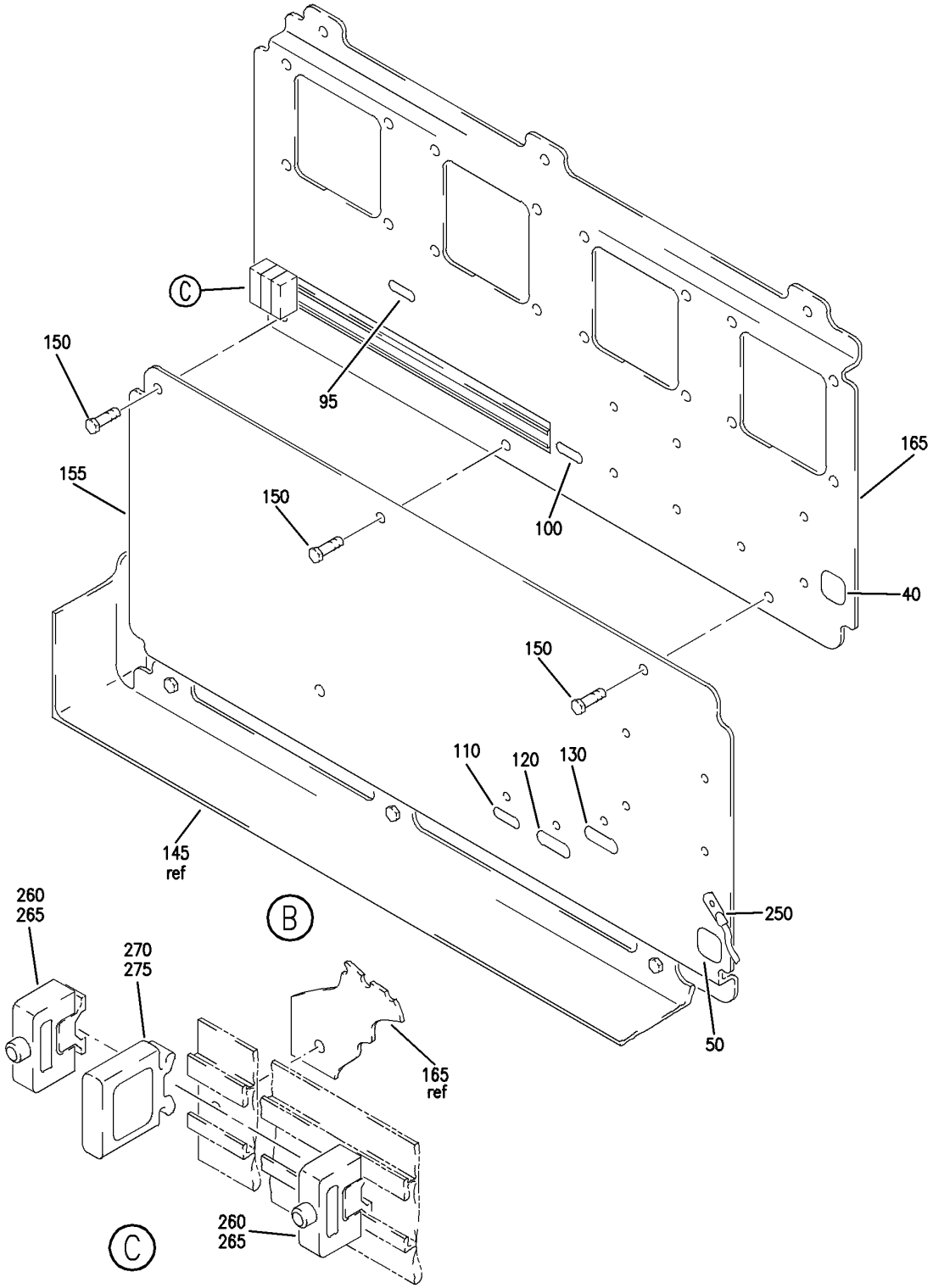

SHIELD INSTL-P33 MISC ELEC EQPT
FIGURE 3 (SHEET 2)

BOEING PROPRIETARY - Copyright © - Unpublished Work - See title page for details.

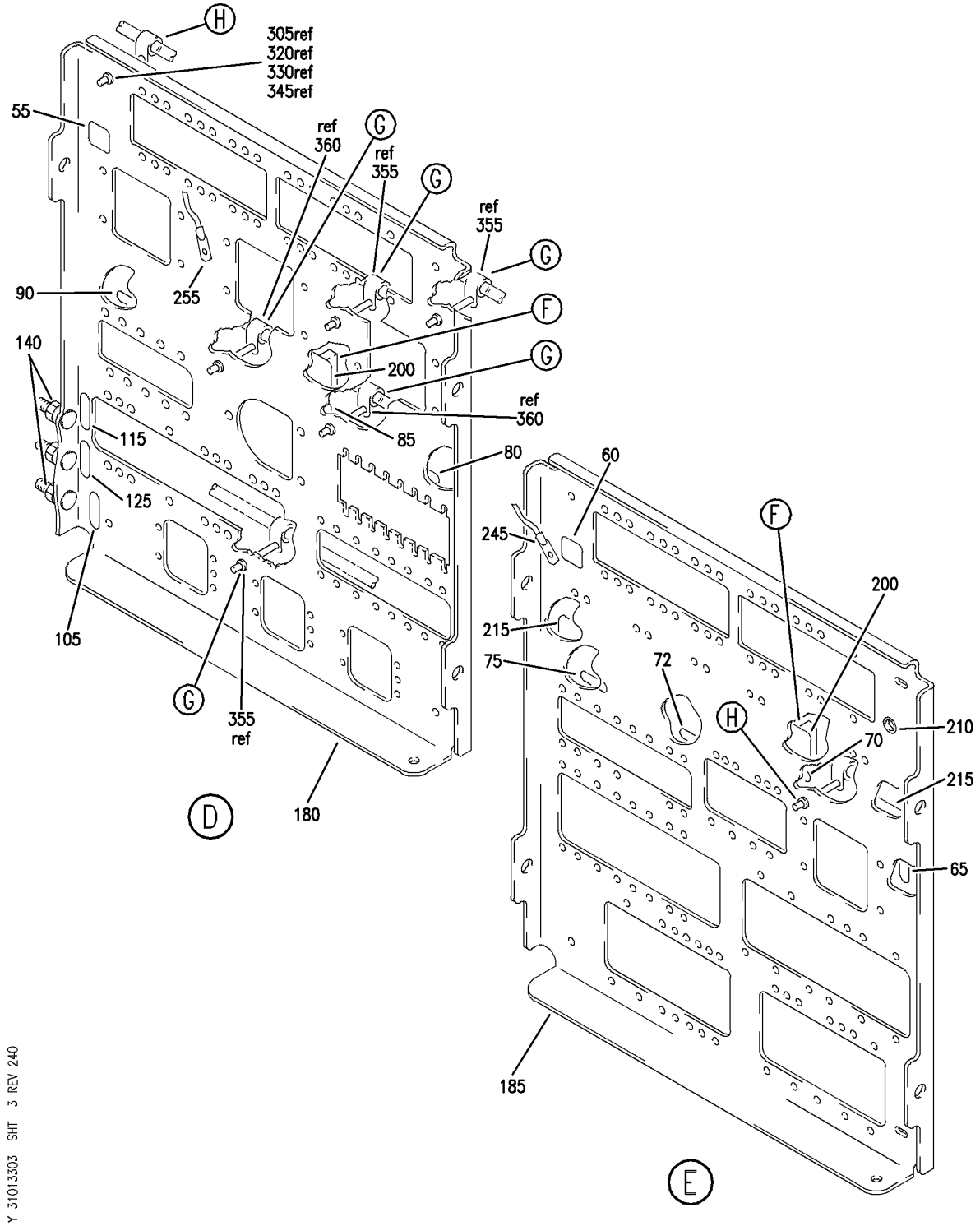

SHIELD INSTL-P33 MISC ELEC EQPT
FIGURE 3 (SHEET 3)

BOEING PROPRIETARY - Copyright © - Unpublished Work - See title page for details.

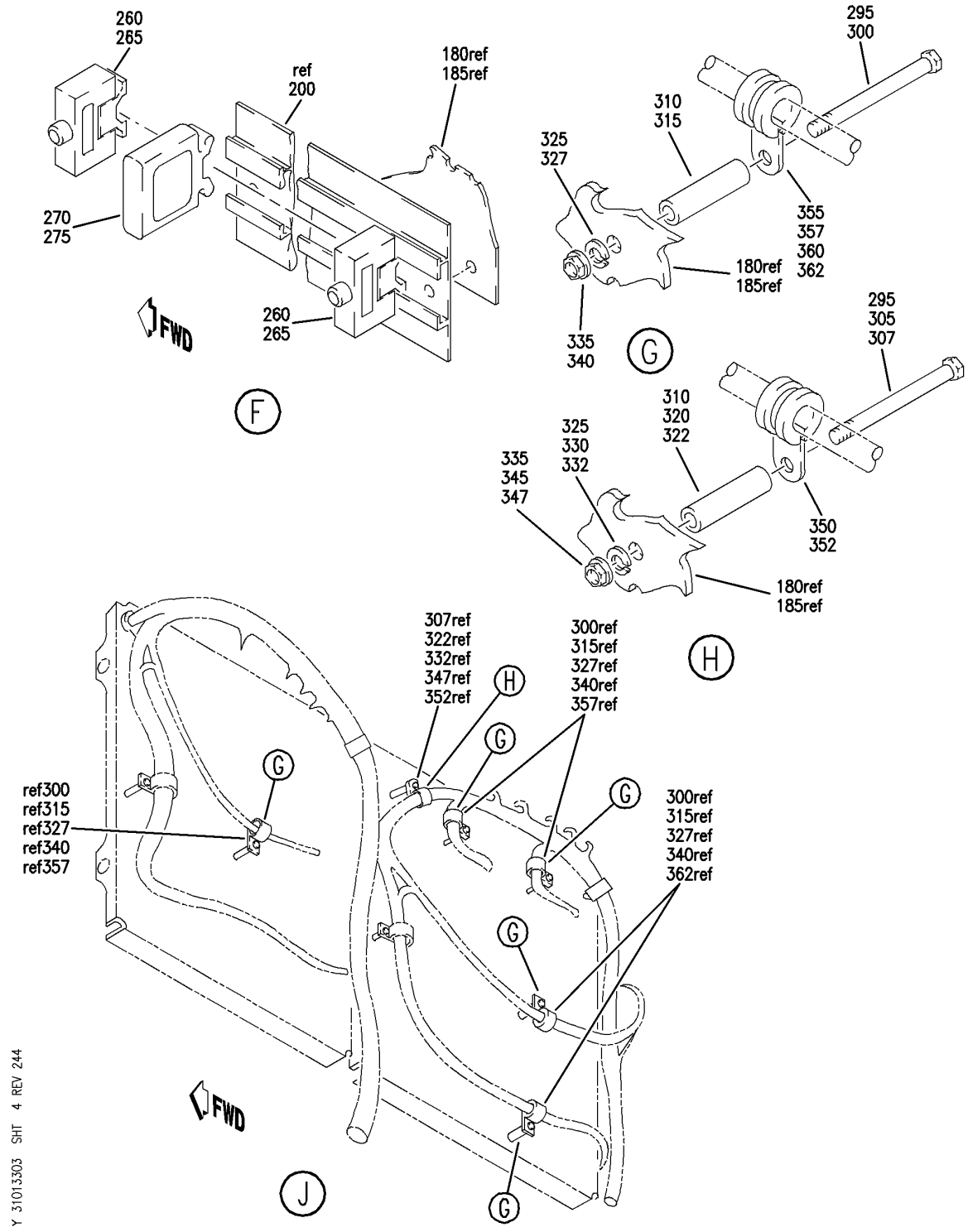

SHIELD INSTL-P33 MISC ELEC EQPT
FIGURE 3 (SHEET 4)

BOEING PROPRIETARY - Copyright © - Unpublished Work - See title page for details.

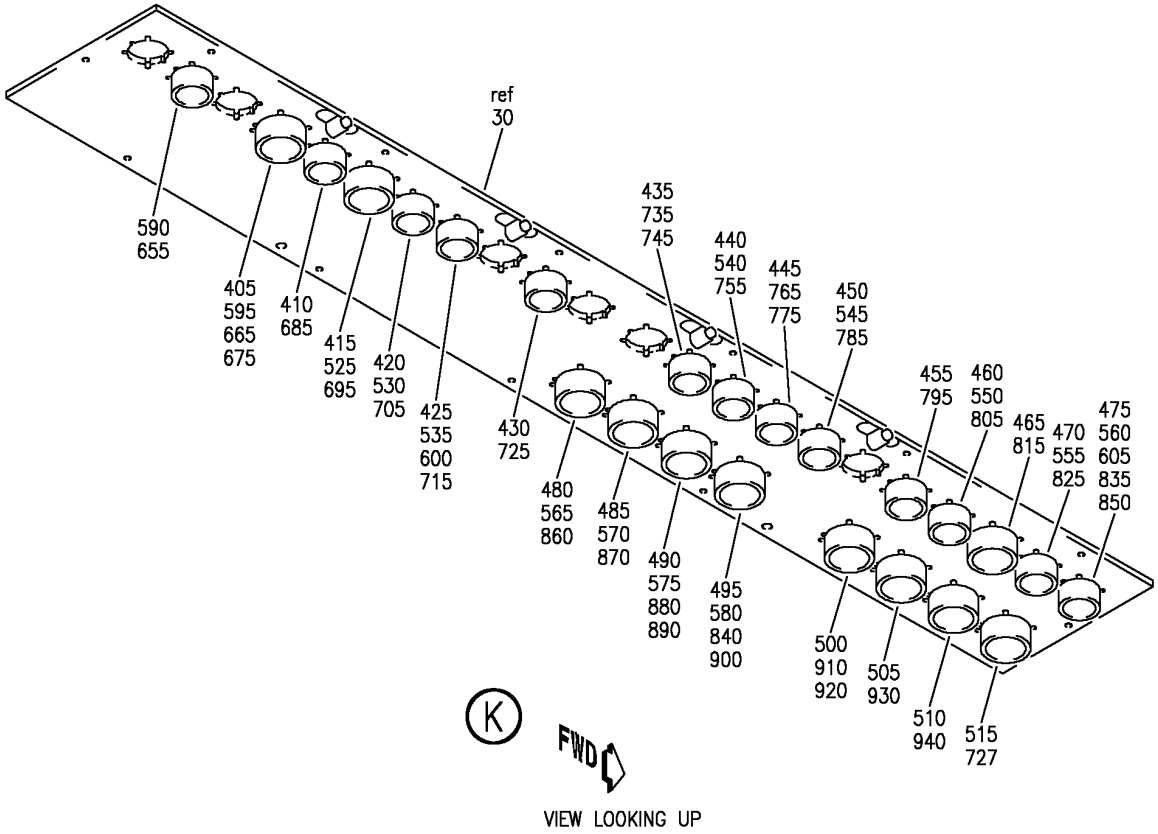

Y 31013303 SHT 5 REV 267

SHIELD INSTL-P33 MISC ELEC EQPT
FIGURE 3 (SHEET 5)

BOEING PROPRIETARY - Copyright © - Unpublished Work - See title page for details.

FIG ITEM	PART NUMBER	1 2 3 4 5 6 7 NOMENCLATURE	EFFECT FROM TO	UNITS PER ASSY
3				
		SHIELD INSTL-P33 MISC ELEC EQPT	002004 006100 107107 121503 904999	
- 1	284N1325-1	SHIELD INSTL-P33 MISC ELEC EQPT FOR NHA SEE: 24-00-58-01C	107107	RF
- 1	284N1325-16	SHIELD INSTL-P33 MISC ELEC EQPT FOR NHA SEE: 24-00-58-01C	002004 006100 121503 904999	RF
5	RBEJ40E20-24	.JUMPER SUPPLIER CODE: V1GK47 SPECIFICATION NUMBER: BACJ40E20-24 OPTIONAL PART: 740E20-24 V91812	002004 006100 107107 121503 904999	1
10	NAS1801-4-12	.SCREW	107107	2
15	NAS1801-4-12	.SCREW	002004 006100 121503 904999	1
20	NAS1801-4-13	.SCREW	002004 006100 107107 121503 904999	2
25	NAS1801-4-16	.SCREW	002004 006100 121503 904999	1

MISSING ITEM NUMBERS NOT APPLICABLE

- ITEM NOT ILLUSTRATED

BOEING PROPRIETARY - Copyright © - Unpublished Work - See title page for details.

FIG ITEM	PART NUMBER	1 2 3 4 5 6 7 NOMENCLATURE	EFFECT FROM TO	UNITS PER ASSY
3				
30	284N1318-1	.SHIELD ASSY-	002004	1
		VARIABLE DRAWING REF:	006100	
		284N1318-5010	107107	
		284N1318-5016	121503	
		284N1318-5019	904999	
		284N1318-5021		
		284N1318-5023		
		REWORKED BY ALERT SB:		
		28A0105R1		
		FUNCTIONAL REFERENCE:		
		24-53-71-03		
		26-15-71-01		
		27-51-71-01		
		27-81-71-01		
		28-21-71-01		
		28-22-71-01		
		28-26-71-01		
		29-11-71-01		
		29-21-71-03		
		29-22-71-01		
		30-31-71-03		
		30-32-71-03		
		32-09-02-05		
		33-42-71-02		
		11-34-01-04		
35	BAC27TEX0222	..DECAL-	002004	1
		PLACARD CONTENT:	006100	
		P33 PANEL MISC ELEC	107107	
		EQUIP	121503	
			904999	
45	BAC27NEX0173	..DECAL-	002004	1
		PLACARD CONTENT:	006100	
		A	107107	
			121503	
			904999	
- 53	BAC27NEX0174	..DECAL-	107107	1
		PLACARD CONTENT:		
		B		
55	BAC27NEX0175	..DECAL-	002004	1
		PLACARD CONTENT:	006100	
		C	107107	
			121503	
			904999	
60	BAC27NEX0176	..DECAL-	002004	1
		PLACARD CONTENT:	006100	
		D	107107	
			121503	
			904999	

MISSING ITEM NUMBERS NOT APPLICABLE

- ITEM NOT ILLUSTRATED

BOEING PROPRIETARY - Copyright © - Unpublished Work - See title page for details.

FIG ITEM	PART NUMBER	1 2 3 4 5 6 7 NOMENCLATURE	EFFECT FROM TO	UNITS PER ASSY
3				
65	BAC27NEX0177	..DECAL- PLACARD CONTENT: GD451	002004 006100 107107 121503 904999	1
72	BAC27NEX0178	..DECAL- PLACARD CONTENT: TB80	002004 006100 107107 121503 904999	1
75	BAC27NEX0179	..DECAL- PLACARD CONTENT: GD450	002004 006100 107107 121503 904999	1
80	BAC27NEX0180	..DECAL- PLACARD CONTENT: GD453	002004 006100 107107 121503 904999	1
85	BAC27NEX0181	..DECAL- PLACARD CONTENT: TB81	002004 006100 107107 121503 904999	1
90	BAC27NEX0182	..DECAL- PLACARD CONTENT: GD452	002004 006100 107107 121503 904999	1
95	BAC27NEX0183	..DECAL- PLACARD CONTENT: GD457 USED ON: 284N1318-1	107107	1
100	BAC27NEX0184	..DECAL- PLACARD CONTENT: TB46	002004 006100 107107 121503 904999	1
110	BAC27NEX1624	..DECAL- PLACARD CONTENT: GD459	002004 006100 107107 121503 904999	1

MISSING ITEM NUMBERS NOT APPLICABLE

– ITEM NOT ILLUSTRATED

BOEING PROPRIETARY - Copyright © - Unpublished Work - See title page for details.

FIG ITEM	PART NUMBER	1 2 3 4 5 6 7 NOMENCLATURE	EFFECT FROM TO	UNITS PER ASSY
3				
120	BAC27NEX1640	..DECAL-	002004	1
		PLACARD CONTENT:	006100	
		GD2538	107107	
			121503	
			904999	
130	BAC27NEX1641	..DECAL-	002004	1
		PLACARD CONTENT:	006100	
		GD2536	107107	
			121503	
			904999	
135	BAC27NEX0593	..DECAL-	002004	2
		PLACARD CONTENT:	006100	
		AP0033	107107	
			121503	
			904999	
140	MS21042L3	..NUT	002004	3
			006100	
			107107	
			121503	
			904999	
145	284N1073-4	..ENCLOSURE ASSY-	002004	1
		OPTIONAL PART:	006100	
		13431000-3	107107	
		V23296	121503	
			904949	
145	13431000-3	..ENCLOSURE ASSY-	002004	1
		SUPPLIER CODE:	006100	
		V23296	107107	
		OPTIONAL PART:	121503	
		284N1073-4	904999	
180	284N1373-125	..PLATE ASSY-MTG	107107	1
180	284N1373-171	..PLATE ASSY-MTG	002004	1
			006100	
			121503	
			904999	
185	284N1373-96	..PLATE ASSY-MTG	002004	1
			006100	
			107107	
			950999	
		ATTACHING PARTS		
- 190	NAS1801-3-7	..SCREW	002004	8
			006100	
			107107	
			121503	
			904999	
- 195	AN960JD10L	..WASHER-	107107	8
			950951	
		-------*-------		

MISSING ITEM NUMBERS NOT APPLICABLE

- ITEM NOT ILLUSTRATED

BOEING PROPRIETARY - Copyright © - Unpublished Work - See title page for details.

FIG ITEM	PART NUMBER	1 2 3 4 5 6 7 NOMENCLATURE	EFFECT FROM TO	UNITS PER ASSY
3				
200	AMY0450T5	...TRACK	002004	1
		SUPPLIER CODE:	006100	
		V09922	107107	
		SPECIFICATION NUMBER:	121503	
		BACT44B0450U	904999	
		ATTACHING PARTS		
- 205	BACR15BA4D	...RIVET-	002004	3
		SIZE DETERMINED ON INSTL.	006100	
			107107	
			121503	
			904999	
		-------*-------		
210	RR2002-3B3	...GROMMET-	002004	1
		SUPPLIER CODE:	006100	
		V57268	107107	
		SPECIFICATION NUMBER:	950999	
		BACG20AF3B3		
		OPTIONAL PART:		
		SZ6924-3B3		
		V95272		
		701-3B3		
		V07096		
		E3B3		
		V60980		
		H3B3		
		V60980		
		G6940-3B3		
		V75345		
		USED ON:		
		284N1373-96		
		284N1373-181		
215	YHLZG16-1	...BLOCK-GND	002004	2
		SUPPLIER CODE:	006100	
		V09922	107107	
			121503	
			904999	
		ATTACHING PARTS		
- 222	BACR15BB5AD	...RIVET-	002004	8
		SIZE DETERMINED ON INSTL.	006100	
		USED ON:	107107	
		284N1373-96	950999	
		284N1373-181		
- 225	BACR15FT5D	...RIVET-	002004	8
		SIZE DETERMINED ON INSTL.	006100	
		USED ON:	107107	
		284N1373-171	121503	
		284N1373-125	904999	
		-------*-------		

MISSING ITEM NUMBERS NOT APPLICABLE

- ITEM NOT ILLUSTRATED

BOEING PROPRIETARY - Copyright © - Unpublished Work - See title page for details.

FIG ITEM	PART NUMBER	1 2 3 4 5 6 7 NOMENCLATURE	EFFECT FROM TO	UNITS PER ASSY
3				
250	287N1404-4	..JUMPER ASSY-BONDING USED ON: 284N1318-1	002004 006100 107107 121503 904999	1
255	287N1404-6	..JUMPER-BONDING	002004 006100 107107 121503 904999	1
260	BACC49A1	..CLAMP-	107107	6
260	H49-2	..CLAMP- SUPPLIER CODE: V34941 SPECIFICATION NUMBER: BACC49A2 OPTIONAL PART: MF104-2 V6E102 USED ON: 284N1318-5	002004 006100 121503 904999	6
270	H21-1	..SPACER SUPPLIER CODE: V34941 SPECIFICATION NUMBER: BACS18AR1 OPTIONAL PART: FAB276A V15805 YHLZ1C2 V09922	107107	3
- 400	286N1230-002	WIRE BUNDLE ASSY	121503 904949	RF
- 400	286N1230-003	WIRE BUNDLE ASSY	107107	RF
- 400	286N1230-004	WIRE BUNDLE ASSY	002004 006100 950999	RF
405	BACC45FN22-12P6	.RECEPTACLE- ELECTRICAL EQUIP NUMBER: D41418J WIRING DIAGRAM REF: 291112	002004 006008 950999	1
410	BACC45FN18-8P8	.RECEPTACLE- ELECTRICAL EQUIP NUMBER: D42094J WIRING DIAGRAM REF: 292131	002004 006100 107107 950999	1

MISSING ITEM NUMBERS NOT APPLICABLE

- ITEM NOT ILLUSTRATED

BOEING PROPRIETARY - Copyright © - Unpublished Work - See title page for details.

FIG ITEM	PART NUMBER	1 2 3 4 5 6 7 NOMENCLATURE	EFFECT FROM TO	UNITS PER ASSY
3				
410	BACC45FN18-14P8	.CONNECTOR- ELECTRICAL EQUIP NUMBER: D42094J WIRING DIAGRAM REF: 292131	121503 904949	1
415	BACC45FN20-39P	.RECEPTACLE- ELECTRICAL EQUIP NUMBER: D41410J WIRING DIAGRAM REF: 282221	002004 006100 950999	1
420	BACC45FN14-12S7	.RECEPTACLE- ELECTRICAL EQUIP NUMBER: D42030J WIRING DIAGRAM REF: 282231	002004 006100 950999	1
425	BACC45FN16-24S9	.RECEPTACLE- ELECTRICAL EQUIP NUMBER: D41096J WIRING DIAGRAM REF: 261512	002004 006100 950999	1
430	BACC45FN18-31P8	.CONNECTOR- ELECTRICAL EQUIP NUMBER: D41412J WIRING DIAGRAM REF: 291112	107107 121503 904949	1
435	BACC45FN14-15P9	.CONNECTOR- ELECTRICAL EQUIP NUMBER: D41420J WIRING DIAGRAM REF: 282111	002004 006100 107107 121503 904999	1
440	BACC45FN18-8P6	.CONNECTOR- ELECTRICAL EQUIP NUMBER: D41426J WIRING DIAGRAM REF: 261512	002004 006100 950999	1
445	BACC45FN18-14P8	.CONNECTOR- ELECTRICAL EQUIP NUMBER: D41422J WIRING DIAGRAM REF: 282111	002004 006100 107107 121503 904999	1
450	BACC45FN18-31P	.CONNECTOR- ELECTRICAL EQUIP NUMBER: D42006J WIRING DIAGRAM REF: 282231	002004 006100 950999	1

MISSING ITEM NUMBERS NOT APPLICABLE

– ITEM NOT ILLUSTRATED

BOEING PROPRIETARY - Copyright © - Unpublished Work - See title page for details.

FIG ITEM	PART NUMBER	1 2 3 4 5 6 7 NOMENCLATURE	EFFECT FROM TO	UNITS PER ASSY
3				
460	BACC45FN14-15P6	.CONNECTOR- ELECTRICAL EQUIP NUMBER: D41950J WIRING DIAGRAM REF: 282221	002004 006100 950999	1
470	BACC45FN16-10S	.CONNECTOR- ELECTRICAL EQUIP NUMBER: D41722J WIRING DIAGRAM REF: 282211	002004 006100 950999	1
475	BACC45FN16-24S7	.CONNECTOR- ELECTRICAL EQUIP NUMBER: D41626J WIRING DIAGRAM REF: 261512	002004 006100 950999	1
480	BACC45FN18-31P8	.CONNECTOR- ELECTRICAL EQUIP NUMBER: D41870J WIRING DIAGRAM REF: 282211	002004 006100 950999	1
485	BACC45FN22-32S	.CONNECTOR- ELECTRICAL EQUIP NUMBER: D41704J WIRING DIAGRAM REF: 284111	002004 006100 950999	1
490	BACC45FN22-19P7	.CONNECTOR- ELECTRICAL EQUIP NUMBER: D41416J WIRING DIAGRAM REF: 282211	002004 006100 950999	1
495	BACC45FN22-55P9	.CONNECTOR- ELECTRICAL EQUIP NUMBER: D41414J WIRING DIAGRAM REF: 282231	002004 006100 950999	1
500	BACC45FN22-32P	.CONNECTOR- ELECTRICAL EQUIP NUMBER: D41424J WIRING DIAGRAM REF: 291112	002004 006100 107107 121503 904999	1
505	BACC45FN20-25S7	.RECEPTACLE- ELECTRICAL EQUIP NUMBER: D41692J WIRING DIAGRAM REF: 275121	002004 006100 107107 121503 904999	1

MISSING ITEM NUMBERS NOT APPLICABLE

– ITEM NOT ILLUSTRATED

BOEING PROPRIETARY - Copyright © - Unpublished Work - See title page for details.

FIG ITEM	PART NUMBER	1 2 3 4 5 6 7 NOMENCLATURE	EFFECT FROM TO	UNITS PER ASSY
3				
510	BACC45FN22-55S9	.RECEPTACLE- ELECTRICAL EQUIP NUMBER: D41718J WIRING DIAGRAM REF: 282611	002004 006100 107107 121503 904999	1
515	BACC45FN22-55P6	.CONNECTOR- ELECTRICAL EQUIP NUMBER: D41412J WIRING DIAGRAM REF: 291112	002004 006100 950999	1
- 520	286N1232-002	WIRE BUNDLE ASSY	121503 904949	RF
- 520	286N1232-003	WIRE BUNDLE ASSY	107107	RF
525	BACC45FN18-31P	.CONNECTOR- ELECTRICAL EQUIP NUMBER: D41410J WIRING DIAGRAM REF: 282211	107107 121503 904949	1
530	BACC45FN14-12S7	.RECEPTACLE- ELECTRICAL EQUIP NUMBER: D42030J WIRING DIAGRAM REF: 303111	107107 121503 904949	1
540	BACC45FN16-24P6	.CONNECTOR- ELECTRICAL EQUIP NUMBER: D41426J WIRING DIAGRAM REF: 261512	121503 904949	1
540	BACC45FN18-8P6	.CONNECTOR- ELECTRICAL EQUIP NUMBER: D41426J WIRING DIAGRAM REF: 261512	107107	1
545	BACC45FN18-31P	.CONNECTOR- ELECTRICAL EQUIP NUMBER: D42006J WIRING DIAGRAM REF: 282231	107107 121503 904949	1
550	BACC45FN14-15P6	.CONNECTOR- ELECTRICAL EQUIP NUMBER: D41950J WIRING DIAGRAM REF: 282221	107107 121503 904949	1
555	BACC45FN16-10S	.CONNECTOR- ELECTRICAL EQUIP NUMBER: D41722J WIRING DIAGRAM REF: 282211	107107 121503 904949	1

MISSING ITEM NUMBERS NOT APPLICABLE

- ITEM NOT ILLUSTRATED

BOEING PROPRIETARY - Copyright © - Unpublished Work - See title page for details.

FIG ITEM	PART NUMBER	1 2 3 4 5 6 7 NOMENCLATURE	EFFECT FROM TO	UNITS PER ASSY
3				
565	BACC45FN18-31P8	.CONNECTOR- ELECTRICAL EQUIP NUMBER: D41870J WIRING DIAGRAM REF: 282211	107107 121503 904949	1
570	BACC45FN22-32S	.CONNECTOR- ELECTRICAL EQUIP NUMBER: D41704J WIRING DIAGRAM REF: 320911	107107 121503 904949	1
575	BACC45FN22-19P7	.CONNECTOR- ELECTRICAL EQUIP NUMBER: D41416J WIRING DIAGRAM REF: 291112	107107 121503 904949	1
580	BACC45FN22-55P9	.CONNECTOR- ELECTRICAL EQUIP NUMBER: D41414J WIRING DIAGRAM REF: 282231	107107 121503 904949	1
- 585	286N1234-002	WIRE BUNDLE ASSY	107107 121503 904949	RF
595	BACC45FN22-12P6	.RECEPTACLE- ELECTRICAL EQUIP NUMBER: D41418J WIRING DIAGRAM REF: 291112	107107 121503 904949	1
600	BACC45FN12-12S9	.CONNECTOR- ELECTRICAL EQUIP NUMBER: D41096J WIRING DIAGRAM REF: 261512	107107 121503 904949	1
605	BACC45FN16-10S7	.CONNECTOR- ELECTRICAL EQUIP NUMBER: D41626J WIRING DIAGRAM REF: 282221	107107 121503 904949	1
- 660	286N2244-001	WIRE BUNDLE ASSY-	107107	RF
- 660	286N2244-002	WIRE BUNDLE ASSY	121503 904949	RF
- 660	286N2244-004	WIRE BUNDLE ASSY	002004 006100 950999	RF
665	BACC45FT22-12S6	.PLUG- ELECTRICAL EQUIP NUMBER: D41418P WIRING DIAGRAM REF: 275111	002004 006100 107107 121503 904999	1

MISSING ITEM NUMBERS NOT APPLICABLE

- ITEM NOT ILLUSTRATED

BOEING PROPRIETARY - Copyright © - Unpublished Work - See title page for details.

FIG ITEM	PART NUMBER	1 2 3 4 5 6 7 NOMENCLATURE	EFFECT FROM TO	UNITS PER ASSY
3				
- 680	286N4220-005	WIRE BUNDLE ASSY	107107	RF
- 680	286N4220-006	WIRE BUNDLE ASSY	121503 904949	RF
- 680	286N4220-007	WIRE BUNDLE ASSY	002004 006100 950999	RF
685	BACC45FT18-14S8	.RECEPTACLE- ELECTRICAL EQUIP NUMBER: D42094P WIRING DIAGRAM REF: 292131	121503 904949	1
685	BACC45FT18-8S8	.PLUG- ELECTRICAL EQUIP NUMBER: D42094P WIRING DIAGRAM REF: 292131	002004 006100 107107 950999	1
- 690	286N2064-003	WIRE BUNDLE ASSY	121503 904949	RF
- 690	286N2064-004	WIRE BUNDLE ASSY	107107	RF
- 690	286N2064-005	WIRE BUNDLE ASSY-	002004 006100 950999	RF
695	BACC45FT18-31S	.CONNECTOR- ELECTRICAL EQUIP NUMBER: D41410P WIRING DIAGRAM REF: 334211	107107 121503 904949	1
695	BACC45FT20-39S	.CONNECTOR- ELECTRICAL EQUIP NUMBER: D41410P WIRING DIAGRAM REF: 334211	002004 006100 950999	1
- 700	286N2042-002	WIRE BUNDLE ASSY	107107 121503 904949	RF
- 700	286N2042-003	WIRE BUNDLE ASSY	002004 006100 950999	RF
705	BACC45FT14-12P7	.PLUG- ELECTRICAL EQUIP NUMBER: D42030P WIRING DIAGRAM REF: 303111	002004 006100 107107 121503 904999	1
- 710	286N2150-002	WIRE BUNDLE ASSY	121503 904949	RF
- 710	286N2150-003	WIRE BUNDLE ASSY	107107	RF
- 710	286N2150-004	WIRE BUNDLE ASSY	002004 006100 950999	RF

MISSING ITEM NUMBERS NOT APPLICABLE

- ITEM NOT ILLUSTRATED

BOEING PROPRIETARY - Copyright © - Unpublished Work - See title page for details.

FIG ITEM	PART NUMBER	1 2 3 4 5 6 7 NOMENCLATURE	EFFECT FROM TO	UNITS PER ASSY
3				
715	BACC45FT12-12P9	.CONNECTOR-	107107	1
		ELECTRICAL EQUIP NUMBER:	121503	
		D41096P	904949	
		WIRING DIAGRAM REF:		
		261512		
715	BACC45FT16-24P9	.CONNECTOR-	002004	1
		ELECTRICAL EQUIP NUMBER:	006100	
		D41096P	950999	
		WIRING DIAGRAM REF:		
		261512		
- 720	286N2070-003	WIRE BUNDLE ASSY	121503	RF
			904949	
- 720	286N2070-004	WIRE BUNDLE ASSY	107107	RF
- 720	286N2070-005	WIRE BUNDLE ASSY-	002004	RF
			006100	
			950999	
725	BACC45FT18-31S8	.CONNECTOR-	107107	1
		ELECTRICAL EQUIP NUMBER:	121503	
		D41412P	904949	
		WIRING DIAGRAM REF:		
		334211		
727	BACC45FT22-55S6	.CONNECTOR-	002004	1
		ELECTRICAL EQUIP NUMBER:	006100	
		D41412P	950999	
		WIRING DIAGRAM REF:		
		334211		
- 740	286N2260-001	WIRE BUNDLE ASSY-	002004	RF
			006100	
			107107	
			950999	
- 740	286N2260-002	WIRE BUNDLE ASSY	121503	RF
			904949	
745	BACC45FT14-15S9	.CONNECTOR-	002004	1
		ELECTRICAL EQUIP NUMBER:	006100	
		D41420P	107107	
		WIRING DIAGRAM REF:	121503	
		282111	904999	
- 750	286N2358-001	WIRE BUNDLE ASSY	002004	1
			006100	
			950999	
- 750	286N2358-002	WIRE BUNDLE ASSY	121503	1
			904949	
- 750	286N2358-003	WIRE BUNDLE ASSY	107107	1
755	BACC45FT16-24S6	.CONNECTOR-	121503	1
		ELECTRICAL EQUIP NUMBER:	904949	
		D41426P		
		WIRING DIAGRAM REF:		
		282221		

MISSING ITEM NUMBERS NOT APPLICABLE

- ITEM NOT ILLUSTRATED

BOEING PROPRIETARY - Copyright © - Unpublished Work - See title page for details.

FIG ITEM	PART NUMBER	1 2 3 4 5 6 7 NOMENCLATURE	EFFECT FROM TO	UNITS PER ASSY
3				
755	BACC45FT18-8S6	.CONNECTOR-	002004	1
		ELECTRICAL EQUIP NUMBER:	006100	
		D41426P	107107	
		WIRING DIAGRAM REF:	950999	
		282221		
- 770	286N2350-001	WIRE BUNDLE ASSY-	002004	RF
			006100	
			107107	
			950999	
- 770	286N2350-002	WIRE BUNDLE ASSY	121503	RF
			904949	
775	BACC45FT18-14S8	.RECEPTACLE-	002004	1
		ELECTRICAL EQUIP NUMBER:	006100	
		D41422P	107107	
		WIRING DIAGRAM REF:	121503	
		282211	904999	
- 780	286N4228-013	WIRE BUNDLE ASSY	107107	1
			121503	
			904949	
- 780	286N4228-015	WIRE BUNDLE ASSY-	002004	1
			006100	
			950999	
785	BACC45FT18-31S	.CONNECTOR-	002004	1
		ELECTRICAL EQUIP NUMBER:	006100	
		D42006P	107107	
		WIRING DIAGRAM REF:	121503	
		282221	904999	
- 800	286N4236-010	WIRE BUNDLE ASSY	107107	RF
			121503	
			904949	
- 800	286N4236-015	WIRE BUNDLE ASSY	002004	RF
			006100	
			950999	
805	BACC45FT14-15S6	.PLUG-	002004	1
		ELECTRICAL EQUIP NUMBER:	006100	
		D41950P	107107	
		WIRING DIAGRAM REF:	121503	
		282221	904999	
- 820	286N4212-003	.WIRE BUNDLE ASSY-	107107	RF
		REWORKED BY ALERT SB:		
		27A0130		
- 820	286N4212-005	.WIRE BUNDLE ASSY-	904949	RF
		REWORKED BY ALERT SB:		
		27A0130		
- 820	286N4212-014	.WIRE BUNDLE ASSY-	121503	RF
		REWORKED BY ALERT SB:		
		27A0130		

MISSING ITEM NUMBERS NOT APPLICABLE

- ITEM NOT ILLUSTRATED

BOEING PROPRIETARY - Copyright © - Unpublished Work - See title page for details.

FIG ITEM	PART NUMBER	1 2 3 4 5 6 7 NOMENCLATURE	EFFECT FROM TO	UNITS PER ASSY
3				
- 820	286N4212-015	.WIRE BUNDLE ASSY-	002004	RF
		REWORKED BY ALERT SB:	006100	
		27A0130	950999	
825	BACC45FT16-10P	.CONNECTOR-	002004	1
		ELECTRICAL EQUIP NUMBER:	006100	
		D41722P	107107	
		WIRING DIAGRAM REF:	121503	
		282211	904999	
- 830	286N2078-003	WIRE BUNDLE ASSY-	121503	RF
			904949	
- 830	286N2078-004	WIRE BUNDLE ASSY	107107	RF
- 830	286N2078-005	WIRE BUNDLE ASSY-	002004	RF
			006100	
			950999	
840	BACC45FT22-55S9	.PLUG-	002004	1
		ELECTRICAL EQUIP NUMBER:	006100	
		D41414P	107107	
		WIRING DIAGRAM REF:	121503	
		332211	904999	
- 845	286N4204-005	WIRE BUNDLE ASSY	107107	RF
- 845	286N4204-007	WIRE BUNDLE ASSY	121503	RF
			904949	
- 845	286N4204-009	WIRE BUNDLE ASSY	002004	RF
			006100	
			950999	
850	BACC45FT16-10P7	.CONNECTOR-	107107	1
		ELECTRICAL EQUIP NUMBER:	121503	
		D41626P	904949	
		WIRING DIAGRAM REF:		
		334211		
850	BACC45FT16-24P7	.PLUG-	002004	1
		ELECTRICAL EQUIP NUMBER:	006100	
		D41626P	950999	
		WIRING DIAGRAM REF:		
		334211		
- 855	286N2066-006	WIRE BUNDLE ASSY-	121503	RF
			904949	
- 855	286N2066-007	WIRE BUNDLE ASSY	107107	RF
- 855	286N2066-008	WIRE BUNDLE ASSY-	002004	RF
			006100	
			950999	
860	BACC45FT18-31S8	.CONNECTOR-	002004	1
		ELECTRICAL EQUIP NUMBER:	006100	
		D41870P	107107	
		WIRING DIAGRAM REF:	121503	
		282211	904999	
- 865	286N4202-004	.WIRE BUNDLE ASSY	107107	1
- 865	286N4202-005	.WIRE BUNDLE ASSY	904949	1

MISSING ITEM NUMBERS NOT APPLICABLE

- ITEM NOT ILLUSTRATED

BOEING PROPRIETARY - Copyright © - Unpublished Work - See title page for details.

FIG ITEM	PART NUMBER	1 2 3 4 5 6 7 NOMENCLATURE	EFFECT FROM TO	UNITS PER ASSY
3				
- 865	286N4202-009	.WIRE BUNDLE ASSY	002004 006100 950999	1
- 865	286N4202-011	.WIRE BUNDLE ASSY	121503	1
870	BACC45FT22-32P	.PLUG- ELECTRICAL EQUIP NUMBER: D41704P WIRING DIAGRAM REF: 282111	002004 006100 107107 121503 904999	1
- 885	286N2256-001	WIRE BUNDLE ASSY-	002004 006100 107107 950999	RF
- 885	286N2256-002	WIRE BUNDLE ASSY	121503 904949	RF
890	BACC45FT22-19S7	.PLUG- ELECTRICAL EQUIP NUMBER: D41416P WIRING DIAGRAM REF: 282211	002004 006100 107107 121503 904999	1
- 915	286N2356-001	WIRE BUNDLE ASSY	107107	RF
- 915	286N2356-002	WIRE BUNDLE ASSY	121503 904949	RF
- 915	286N2356-004	WIRE BUNDLE ASSY-	002004 006100 950999	RF
920	BACC45FT22-32S	.CONNECTOR- ELECTRICAL EQUIP NUMBER: D41424P WIRING DIAGRAM REF: 275121	002004 006100 107107 121503 904999	1
- 925	286N4208-003	WIRE BUNDLE ASSY	107107 121503 904949	RF
- 925	286N4208-004	WIRE BUNDLE ASSY	002004 006100 950999	RF
930	BACC45FT20-25P7	.PLUG- ELECTRICAL EQUIP NUMBER: D41692P WIRING DIAGRAM REF: 278111	002004 006100 107107 121503 904999	1
- 935	286N4216-003	WIRE BUNDLE ASSY- REWORKED BY ALERT SB: 27A0130	107107	RF
- 935	286N4216-004	WIRE BUNDLE ASSY- REWORKED BY ALERT SB: 27A0130	904949	RF

MISSING ITEM NUMBERS NOT APPLICABLE

- ITEM NOT ILLUSTRATED

BOEING PROPRIETARY - Copyright © - Unpublished Work - See title page for details.

FIG ITEM	PART NUMBER	1 2 3 4 5 6 7 NOMENCLATURE	EFFECT FROM TO	UNITS PER ASSY
3				
- 935	286N4216-005	WIRE BUNDLE ASSY-	002004	RF
		REWORKED BY SB:	006100	
		27A0130	950999	
- 935	286N4216-009	WIRE BUNDLE ASSY-	121503	RF
		REWORKED BY ALERT SB:		
		27A0130		
940	BACC45FT22-55P9	.CONNECTOR-	002004	1
		ELECTRICAL EQUIP NUMBER:	006100	
		D41718P	107107	
		WIRING DIAGRAM REF:	121503	
		282121	904999	

MISSING ITEM NUMBERS NOT APPLICABLE

- ITEM NOT ILLUSTRATED

BOEING PROPRIETARY - Copyright © - Unpublished Work - See title page for details.

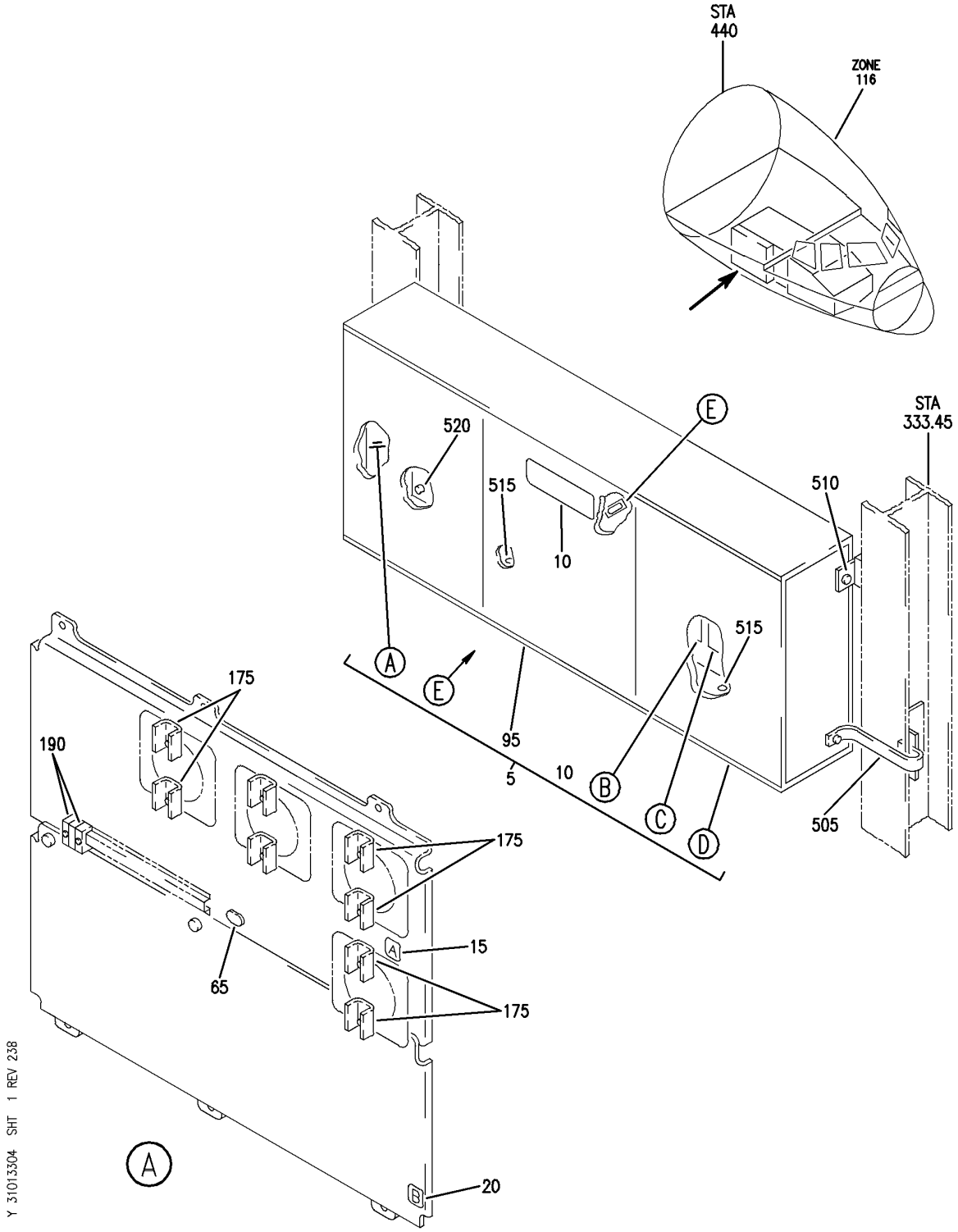

SHIELD INSTL-P33 MISC ELEC EQPT
FIGURE 4 (SHEET 1)

BOEING PROPRIETARY - Copyright © - Unpublished Work - See title page for details.

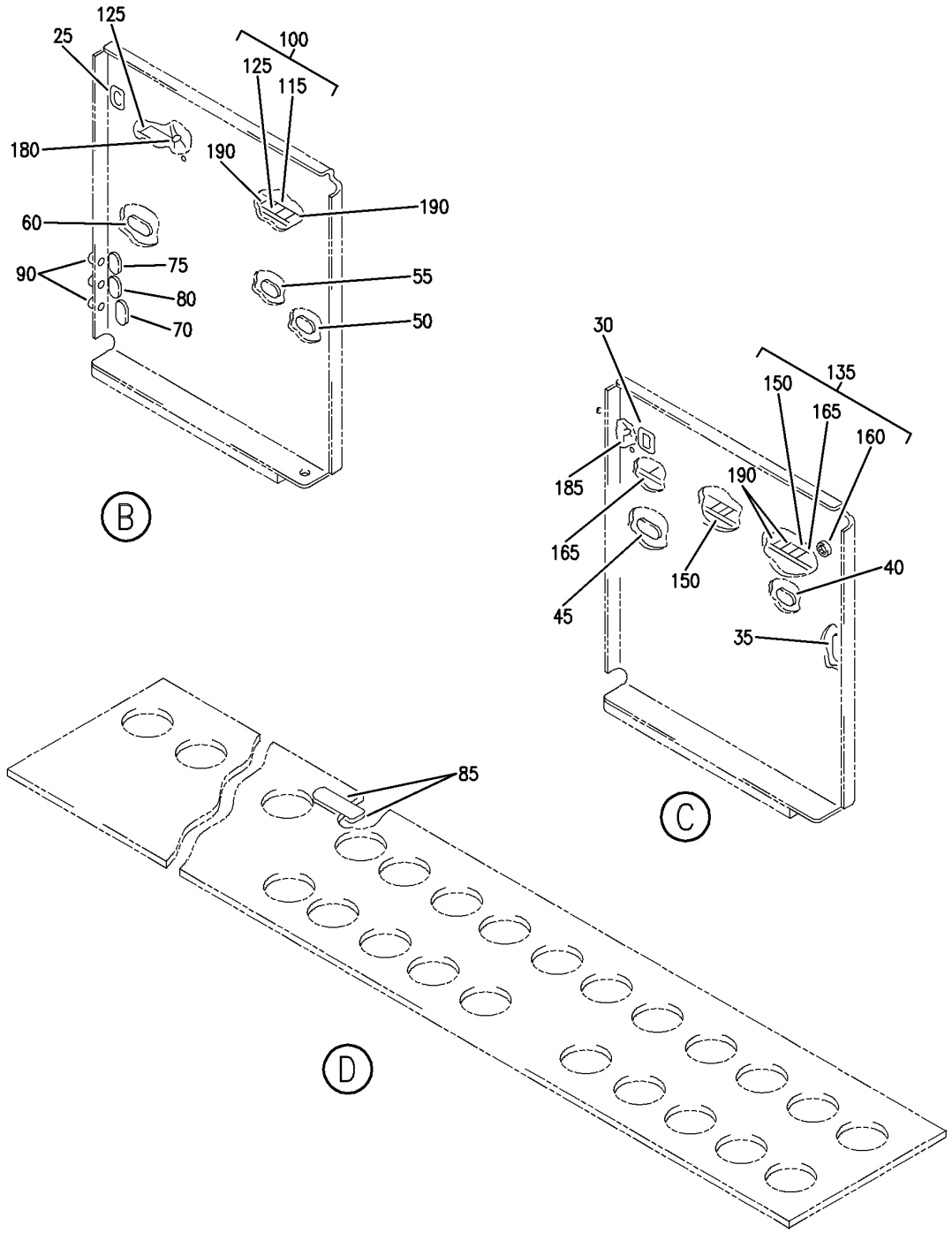

Y 31013S04 SHT 2 REV 238

SHIELD INSTL-P33 MISC ELEC EQPT
FIGURE 4 (SHEET 2)

BOEING PROPRIETARY - Copyright © - Unpublished Work - See title page for details.

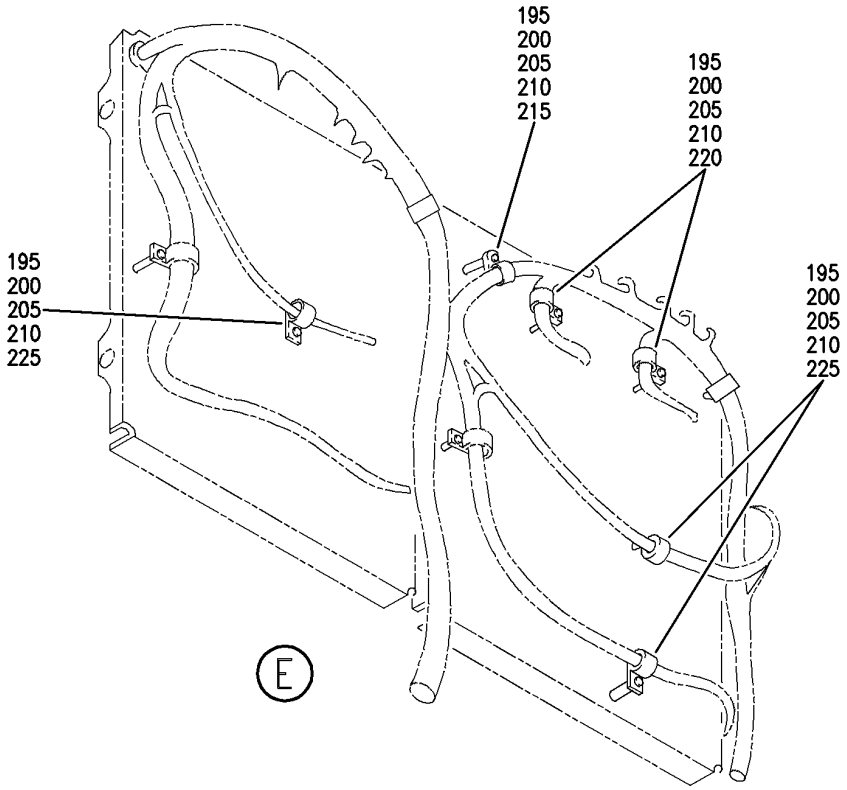

Y 31013304 SHT 3 REV 23B

SHIELD INSTL-P33 MISC ELEC EQPT
FIGURE 4 (SHEET 3)

BOEING PROPRIETARY - Copyright © - Unpublished Work - See title page for details.

FIG ITEM	PART NUMBER	1 2 3 4 5 6 7 NOMENCLATURE	EFFECT FROM TO	UNITS PER ASSY
4				
		SHIELD INSTL-P33 MISC ELEC EQPT	101106 108120 504903	
- 500	284N1325-103	SHIELD INSTL-P33 MISC ELEC EQPT FOR NHA SEE: 24-00-58-05	101102 108120 504903	RF
- 500	MODREF9814	SHIELD INSTL-P33 MISC ELEC EQPT MODULE NUMBER: 284N1325-103 REV A	103106	1
505	RBEJ40E20-24	.JUMPER SUPPLIER CODE: V1GK47 SPECIFICATION NUMBER: BACJ40E20-24 OPTIONAL PART: 740E20-24 V91812	101106 108120 504903	1
510	NAS1801-4-12	.SCREW	101106 108120 504903	1
515	NAS1801-4-13	.SCREW	101106 108120 504903	2
520	NAS1801-4-16	.SCREW	101106 108120 504903	1

MISSING ITEM NUMBERS NOT APPLICABLE

- ITEM NOT ILLUSTRATED

BOEING PROPRIETARY - Copyright © - Unpublished Work - See title page for details.

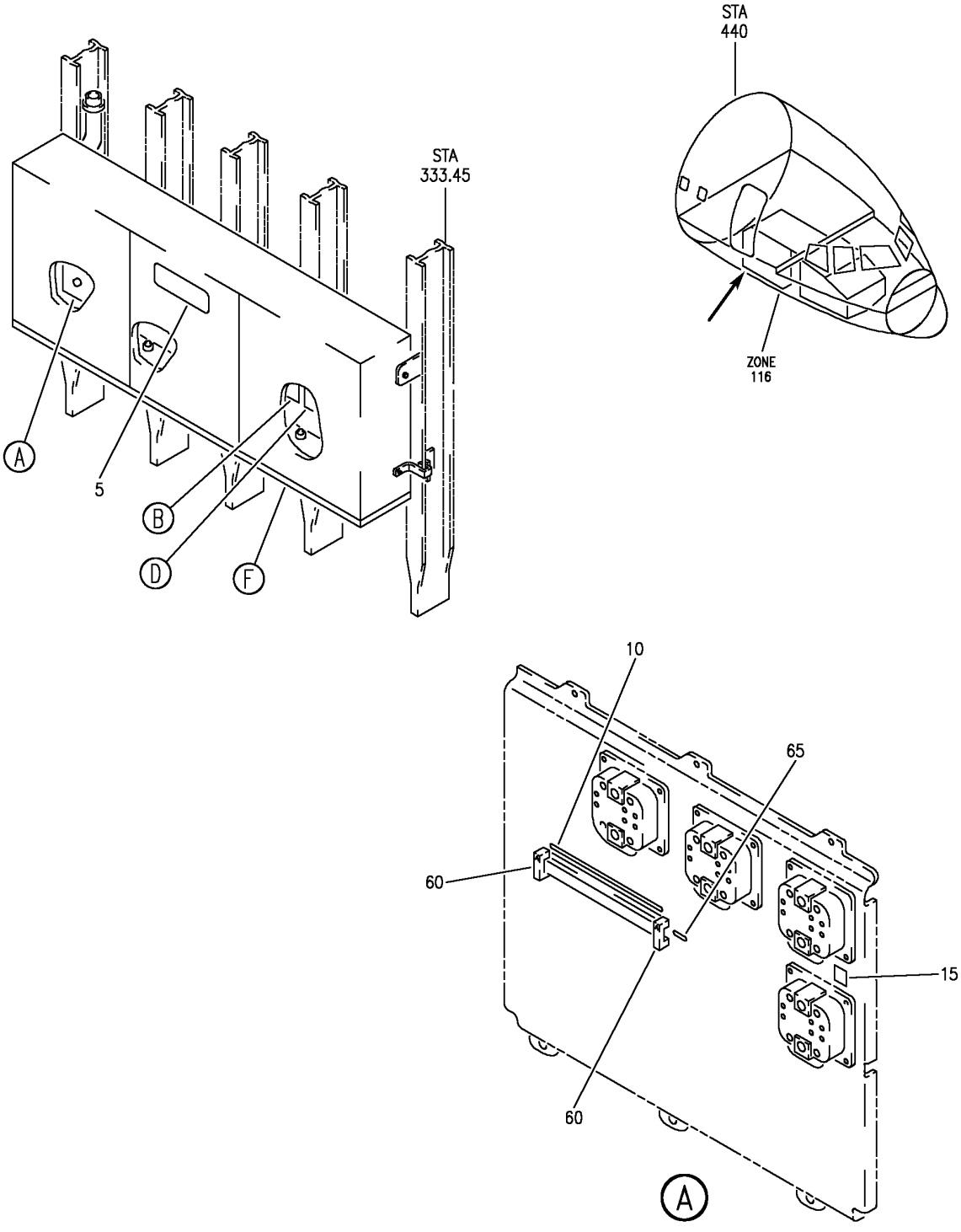

SHIELD INSTL-P33 MISC ELEC EQPT (INDICATING/ RECORDING SYSTEMS ONLY)
FIGURE 10 (SHEET 1)

BOEING PROPRIETARY - Copyright © - Unpublished Work - See title page for details.

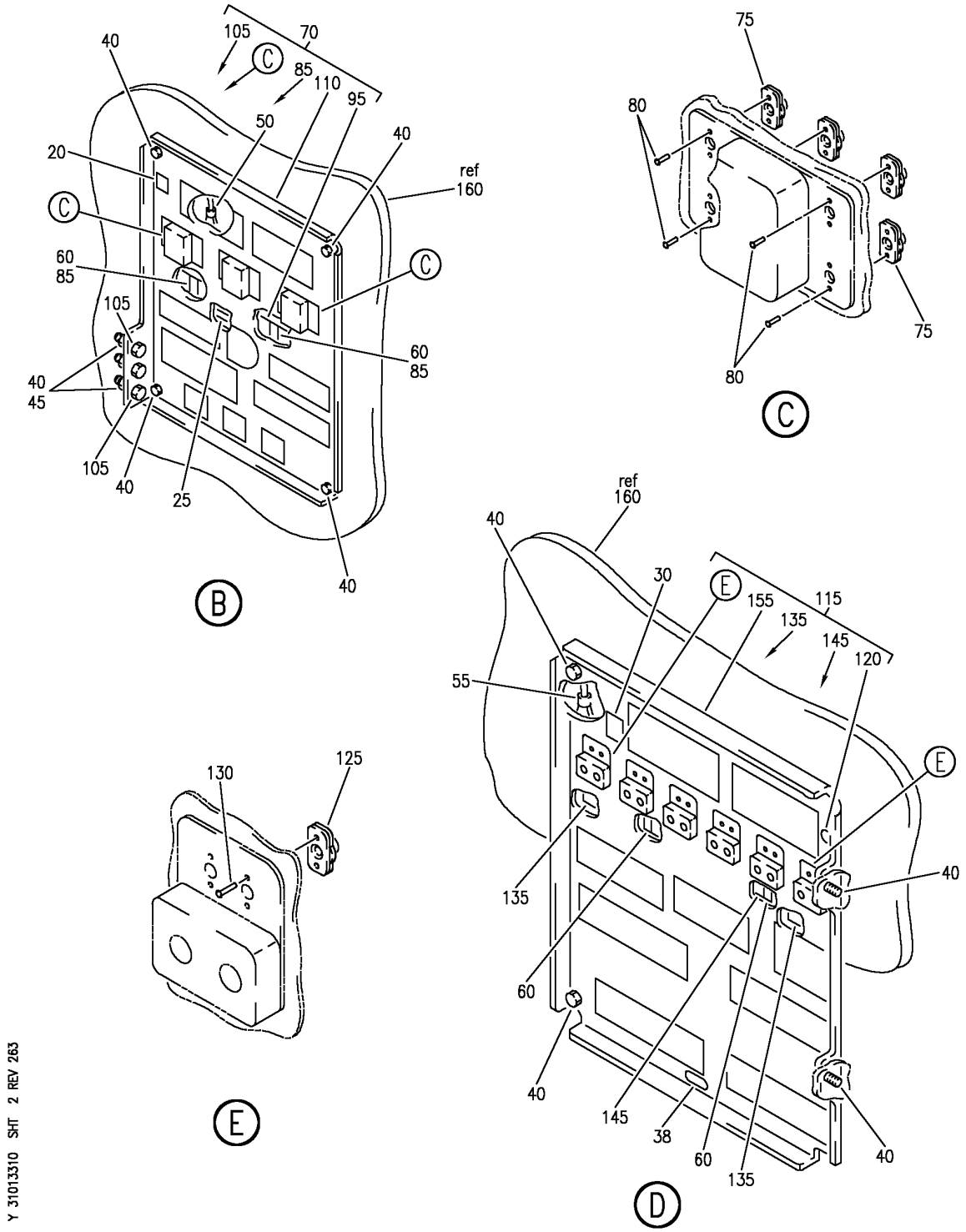

SHIELD INSTL-P33 MISC ELEC EQPT (INDICATING/ RECORDING SYSTEMS ONLY)
FIGURE 10 (SHEET 2)

BOEING PROPRIETARY - Copyright © - Unpublished Work - See title page for details.

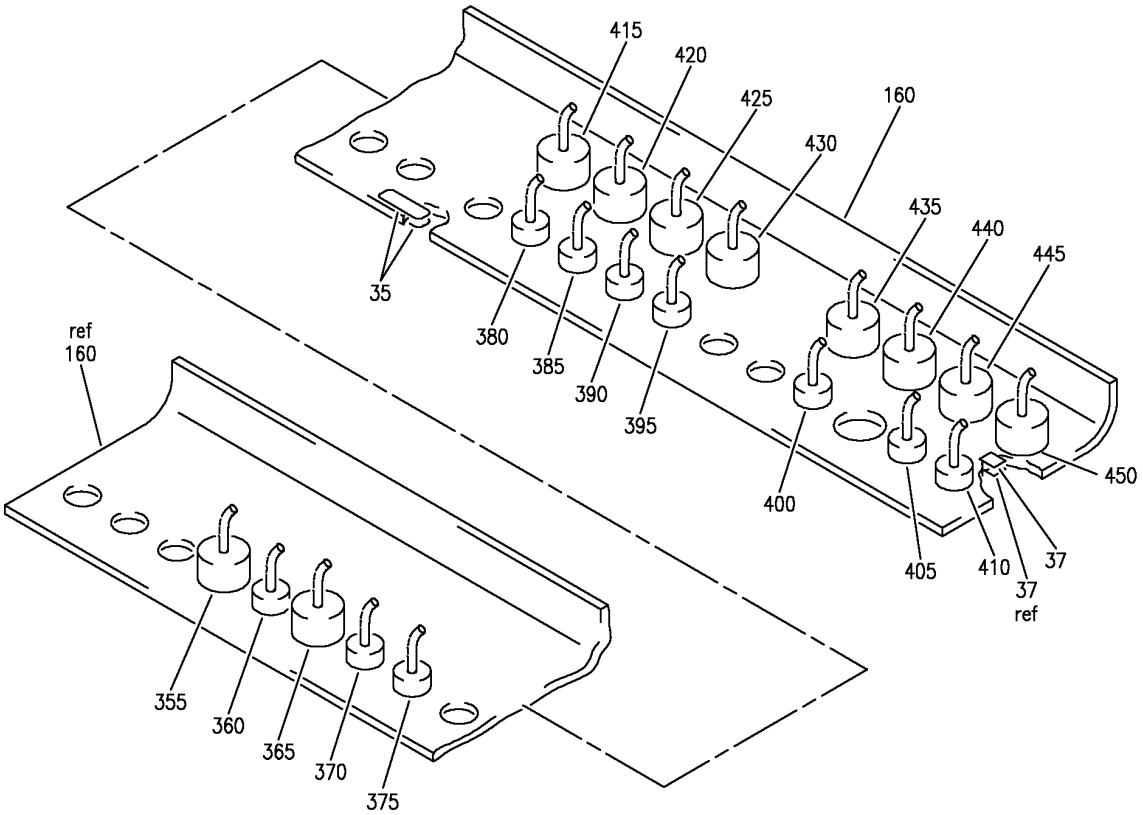

F

Y 31013310 SHT 3 REV 263

SHIELD INSTL-P33 MISC ELEC EQPT (INDICATING/ RECORDING SYSTEMS ONLY)
FIGURE 10 (SHEET 3)

BOEING PROPRIETARY - Copyright © - Unpublished Work - See title page for details.

FIG ITEM	PART NUMBER	1 2 3 4 5 6 7 NOMENCLATURE	EFFECT FROM TO	UNITS PER ASSY
10				
		SHIELD INSTL-P33 MISC ELEC EQPT (INDICATING/ RECORDING SYSTEMS ONLY)	103106	
- 1	MODREF33173	SHIELD INSTL-P33 MISC ELEC EQPT (INDICATING/ RECORDING SYSTEMS ONLY)	103105	1
		MODULE NUMBER: 284N1318-107 REV B		
		FOR OTHER SYS DETAILS SEE:		
		11-36-06-01B		
		24-53-71-03B		
		26-15-71-01B		
		27-51-71-01B		
		27-81-71-01B		
		28-21-71-01B		
		28-22-71-01B		
		28-26-71-01B		
		29-11-71-01B		
		29-21-71-03B		
		29-22-71-01B		
		30-31-71-03B		
		30-32-71-03B		
		33-42-71-02B		
- 1	MODREF34797	SHIELD INSTL-P33 MISC ELEC EQPT (INDICATING/ RECORDING SYSTEMS ONLY)	106106	1
		MODULE NUMBER: 284N1318-107 REV C		
		FOR OTHER SYS DETAILS SEE:		
		11-36-06-01B		
		24-53-71-03B		
		26-15-71-01B		
		27-51-71-01B		
		27-81-71-01B		
		28-21-71-01B		
		28-22-71-01B		
		28-26-71-01B		
		29-11-71-01B		
		29-21-71-03B		
		29-22-71-01B		
		30-31-71-03B		
		30-32-71-03B		
		33-42-71-02B		
5	BAC27TEX0222	.DECAL- PLACARD CONTENT: P33 PANEL MISC ELEC EQUIP	103106	1

MISSING ITEM NUMBERS NOT APPLICABLE

- ITEM NOT ILLUSTRATED

BOEING PROPRIETARY - Copyright © - Unpublished Work - See title page for details.

FIG ITEM	PART NUMBER	1 2 3 4 5 6 7 NOMENCLATURE	EFFECT FROM TO	UNITS PER ASSY
10				
10	BAC27NEX0265	.DECAL-	103106	1
		PLACARD CONTENT:		
		1 THRU 26		
15	BAC27NEX0173	.DECAL-	103106	1
		PLACARD CONTENT:		
		A		
20	BAC27NEX0175	.DECAL-	103106	1
		PLACARD CONTENT:		
		C		
25	BAC27NEX0937	.DECAL-	103106	2
		PLACARD CONTENT:		
		1 THRU 17		
30	BAC27NEX0176	.DECAL-	103106	1
		PLACARD CONTENT:		
		D		
35	BAC27NEX0593	.DECAL-	103106	2
		PLACARD CONTENT:		
		AP0033		
37	TTVF2525WE10	.TAPE-ID	103106	AR
		SUPPLIER CODE:		
		V0KW00		
		SPECIFICATION NUMBER:		
		BACT19J3		
		OPTIONAL PART:		
		THT11-437W10		
		V85480		
38	TTVF7525WE10	.TAPE	103106	AR
		SUPPLIER CODE:		
		V0KW00		
		SPECIFICATION NUMBER:		
		BACT19J4		
		OPTIONAL PART:		
		THT1-437W10		
		V85480		
40	NAS1801-3-7	.SCREW-	103105	8
40	BACS12HN3-7	.SCREW-	106106	8
45	MS21042L3	.NUT-	103105	3
45	PLH53CD	.NUT-	106106	3
		SUPPLIER CODE:		
		VF0224		
		SPECIFICATION NUMBER:		
		BACN10YR3CD		
		OPTIONAL PART:		
		H52732-3CD		
		V15653		
50	287N1404-6	.JUMPER	103106	1
55	287N1404-4	.JUMPER ASSY	103106	1

MISSING ITEM NUMBERS NOT APPLICABLE

– ITEM NOT ILLUSTRATED

BOEING PROPRIETARY - Copyright © - Unpublished Work - See title page for details.

FIG ITEM	PART NUMBER	1 2 3 4 5 6 7 NOMENCLATURE	EFFECT FROM TO	UNITS PER ASSY
10				
60	H49-2	.CLAMP	103106	6
		SUPPLIER CODE:		
		V34941		
		SPECIFICATION NUMBER:		
		BACC49A2		
		OPTIONAL PART:		
		MF104-2		
		V6E102		
65	BACT44B0900U	.TRACK-	103106	1
		ELECTRICAL EQUIP NUMBER:		
		TB0046		
70	284N1373-185	.PLATE ASSY-MTG	103106	1
75	MF53049-08	..NUT	103106	12
		SUPPLIER CODE:		
		V15653		
		SPECIFICATION NUMBER:		
		BACN10JN08		
		OPTIONAL PART:		
		BRFM20A08		
		V52828		
		MF1000-08BAC		
		V15653		
		NS103218-82		
		V80539		
		RMF9201M82		
		V72962		
		VN252A82		
		V92215		
		T8124S08S		
		V11815		
80	BACR15BA3D	..RIVET-	103106	24
		SIZE DETERMINED ON INSTL.		
85	YHLZG16-1	..BLOCK-GND	103106	2
		SUPPLIER CODE:		
		V09922		
		ELECTRICAL EQUIP NUMBER:		
		GD00452		
		GD00453		
		ATTACHING PARTS		
- 90	BACR15FT4D	..RIVET-	103106	8
		SIZE DETERMINED ON INSTL.		
		-------*-------		
95	AMY0450T5	..TRACK-	103106	1
		SUPPLIER CODE:		
		V09922		
		SPECIFICATION NUMBER:		
		BACT44B0450U		
		ELECTRICAL EQUIP NUMBER:		
		TB0081		

MISSING ITEM NUMBERS NOT APPLICABLE

- ITEM NOT ILLUSTRATED

BOEING PROPRIETARY - Copyright © - Unpublished Work - See title page for details.

FIG ITEM	PART NUMBER	1 2 3 4 5 6 7 NOMENCLATURE	EFFECT FROM TO	UNITS PER ASSY
10				
		ATTACHING PARTS		
- 100	BACR15BA4D	..RIVET-	103106	3
		SIZE DETERMINED ON INSTL.		
		-------*-------		
105	VNS1924CA1-8	..STUD-	103106	3
		SUPPLIER CODE:		
		V5M902		
		SPECIFICATION NUMBER:		
		BACS53B1EA1		
		OPTIONAL PART:		
		VNS1924CA3-1-8		
		V92215		
		ELECTRICAL EQUIP NUMBER:		
		GD00459		
		GD02536		
		GD02538		
110	284N1373-186	..PLATE	103106	1
115	284N1373-181	.PLATE ASSY-MTG	103106	1
120	RR2002-3B3	..GROMMET	103106	1
		SUPPLIER CODE:		
		V57268		
		SPECIFICATION NUMBER:		
		BACG20AF3B3		
		OPTIONAL PART:		
		SZ6924-3B3		
		V95272		
		701-3B3		
		V07096		
		E3B3		
		V60980		
		H3B3		
		V60980		
		G6940-3B3		
		V75345		
125	NS103227H62	..NUT	103106	12
		SUPPLIER CODE:		
		V80539		
		SPECIFICATION NUMBER:		
		BACN10KA06BS		
		OPTIONAL PART:		
		T8099S632SK1		
		V11815		
130	BACR15BA3D	..RIVET-	103106	24
		SIZE DETERMINED ON INSTL.		

MISSING ITEM NUMBERS NOT APPLICABLE

– ITEM NOT ILLUSTRATED

BOEING PROPRIETARY - Copyright © - Unpublished Work - See title page for details.

FIG ITEM	PART NUMBER	1 2 3 4 5 6 7 NOMENCLATURE	EFFECT FROM TO	UNITS PER ASSY
10				
135	YHLZG16-1	..BLOCK-GND SUPPLIER CODE: V09922 ELECTRICAL EQUIP NUMBER: GD00450 GD00451 ATTACHING PARTS	103106	2
- 140	BACR15BB5AD	..RIVET- SIZE DETERMINED ON INSTL. -------*-------	103106	8
145	AMY0450T5	..TRACK- SUPPLIER CODE: V09922 SPECIFICATION NUMBER: BACT44B0450U ELECTRICAL EQUIP NUMBER: TB0080 ATTACHING PARTS	103106	1
- 150	BACR15BA4D	..RIVET- SIZE DETERMINED ON INSTL. -------*-------	103106	3
155	284N1373-182	..PLATE	103106	1
160	13431000-5	.ENCLOSURE ASSY- SUPPLIER CODE: V23296	103106	1
- 300	286N1230-701	WIRE BUNDLE ASSY	103106	RF
- 305	YHLZD33	.TERMINAL- SUPPLIER CODE: V09922 ELECTRICAL EQUIP NUMBER: TB0046A WIRING DIAGRAM REF: 292211	103106	2
- 310	YHLZ4	.MODULE- SUPPLIER CODE: V09922 SPECIFICATION NUMBER: BACM15C1B OPTIONAL PART: YHLZ44 V09922 ELECTRICAL EQUIP NUMBER: TB0046G WIRING DIAGRAM REF: 282211	103106	2

MISSING ITEM NUMBERS NOT APPLICABLE

- ITEM NOT ILLUSTRATED

BOEING PROPRIETARY - Copyright © - Unpublished Work - See title page for details.

FIG ITEM	PART NUMBER	1 2 3 4 5 6 7 NOMENCLATURE	EFFECT FROM TO	UNITS PER ASSY
10				
- 315	YHLZ8	.MODULE- SUPPLIER CODE: V09922 SPECIFICATION NUMBER: BACM15C2A ELECTRICAL EQUIP NUMBER: TB0046H WIRING DIAGRAM REF: 282121	103106	1
- 320	YHLZ16-4	.MODULE- SUPPLIER CODE: V09922 SPECIFICATION NUMBER: BACM15C3B OPTIONAL PART: 421120-452 V58982 TBH120452 V58982 ELECTRICAL EQUIP NUMBER: TB0046Y WIRING DIAGRAM REF: 282111	103106	3
- 330	YHLZ4	.MODULE- SUPPLIER CODE: V09922 SPECIFICATION NUMBER: BACM15C1B OPTIONAL PART: YHLZ44 V09922 ELECTRICAL EQUIP NUMBER: TB0080G WIRING DIAGRAM REF: 282121	103106	4
- 335	YHLZ8	.MODULE- SUPPLIER CODE: V09922 SPECIFICATION NUMBER: BACM15C2A ELECTRICAL EQUIP NUMBER: TB0080H WIRING DIAGRAM REF: 282121	103106	1

MISSING ITEM NUMBERS NOT APPLICABLE

- ITEM NOT ILLUSTRATED

BOEING PROPRIETARY - Copyright © - Unpublished Work - See title page for details.

FIG ITEM	PART NUMBER	1 2 3 4 5 6 7 NOMENCLATURE	EFFECT FROM TO	UNITS PER ASSY
10				
- 340	YHLZ16-4	.MODULE- SUPPLIER CODE: V09922 SPECIFICATION NUMBER: BACM15C3B OPTIONAL PART: 421120-452 V58982 TBH120452 V58982 ELECTRICAL EQUIP NUMBER: TB0080Y WIRING DIAGRAM REF: 275121	103106	3
- 350	YHLZ16-4	.MODULE- SUPPLIER CODE: V09922 SPECIFICATION NUMBER: BACM15C3B OPTIONAL PART: 421120-452 V58982 TBH120452 V58982 ELECTRICAL EQUIP NUMBER: TB0081Y WIRING DIAGRAM REF: 282231	103106	2
355	BACC45FN22-12P6	.RECEPTACLE- ELECTRICAL EQUIP NUMBER: D41418J WIRING DIAGRAM REF: 278111	103106	1
360	BACC45FN18-8P8	.RECEPTACLE- ELECTRICAL EQUIP NUMBER: D42094J WIRING DIAGRAM REF: 292131	103106	1
365	BACC45FN20-39P	.RECEPTACLE- ELECTRICAL EQUIP NUMBER: D41410J WIRING DIAGRAM REF: 282221	103106	1
370	BACC45FN14-12S7	.RECEPTACLE- ELECTRICAL EQUIP NUMBER: D42030J WIRING DIAGRAM REF: 282231	103106	1

MISSING ITEM NUMBERS NOT APPLICABLE

- ITEM NOT ILLUSTRATED

BOEING PROPRIETARY - Copyright © - Unpublished Work - See title page for details.

FIG ITEM	PART NUMBER	1 2 3 4 5 6 7 NOMENCLATURE	EFFECT FROM TO	UNITS PER ASSY
10				
375	BACC45FN16-24S9	.RECEPTACLE- ELECTRICAL EQUIP NUMBER: D41096J WIRING DIAGRAM REF: 261512	103106	1
380	BACC45FN14-7P9	.RECEPTACLE- ELECTRICAL EQUIP NUMBER: D41420J WIRING DIAGRAM REF: 282111	103106	1
385	BACC45FN18-8P6	.CONNECTOR- ELECTRICAL EQUIP NUMBER: D41426J WIRING DIAGRAM REF: 261512	103106	1
390	BACC45FN18-31P8	.CONNECTOR- ELECTRICAL EQUIP NUMBER: D41422J WIRING DIAGRAM REF: 282111	103106	1
395	BACC45FN18-31P	.CONNECTOR- ELECTRICAL EQUIP NUMBER: D42006J WIRING DIAGRAM REF: 282231	103106	1
400	BACC45FN14-15P6	.CONNECTOR- ELECTRICAL EQUIP NUMBER: D41950J WIRING DIAGRAM REF: 282221	103106	1
405	BACC45FN16-10S	.CONNECTOR- ELECTRICAL EQUIP NUMBER: D41722J WIRING DIAGRAM REF: 282211	103106	1
410	BACC45FN16-24S7	.CONNECTOR- ELECTRICAL EQUIP NUMBER: D41626J WIRING DIAGRAM REF: 261512	103106	1
415	BACC45FN18-31P8	.CONNECTOR- ELECTRICAL EQUIP NUMBER: D41870J WIRING DIAGRAM REF: 282211	103106	1

MISSING ITEM NUMBERS NOT APPLICABLE

– ITEM NOT ILLUSTRATED

BOEING PROPRIETARY - Copyright © - Unpublished Work - See title page for details.

FIG ITEM	PART NUMBER	1 2 3 4 5 6 7 NOMENCLATURE	EFFECT FROM TO	UNITS PER ASSY
10				
420	BACC45FN22-32S	.CONNECTOR- ELECTRICAL EQUIP NUMBER: D41704J WIRING DIAGRAM REF: 284114	103106	1
425	BACC45FN22-19P7	.CONNECTOR- ELECTRICAL EQUIP NUMBER: D41416J WIRING DIAGRAM REF: 282211	103106	1
430	BACC45FN22-55P9	.CONNECTOR- ELECTRICAL EQUIP NUMBER: D41414J WIRING DIAGRAM REF: 282231	103106	1
435	BACC45FN22-32P	.CONNECTOR- ELECTRICAL EQUIP NUMBER: D41424J WIRING DIAGRAM REF: 282111	103106	1
440	BACC45FN20-25S7	.RECEPTACLE- ELECTRICAL EQUIP NUMBER: D41692J WIRING DIAGRAM REF: 275121	103106	1
445	BACC45FN22-55S9	.RECEPTACLE- ELECTRICAL EQUIP NUMBER: D41718J WIRING DIAGRAM REF: 282611	103106	1
450	BACC45FN22-55P6	.CONNECTOR- ELECTRICAL EQUIP NUMBER: D41412J WIRING DIAGRAM REF: 291112	103106	1

MISSING ITEM NUMBERS NOT APPLICABLE

– ITEM NOT ILLUSTRATED

BOEING PROPRIETARY - Copyright © - Unpublished Work - See title page for details.

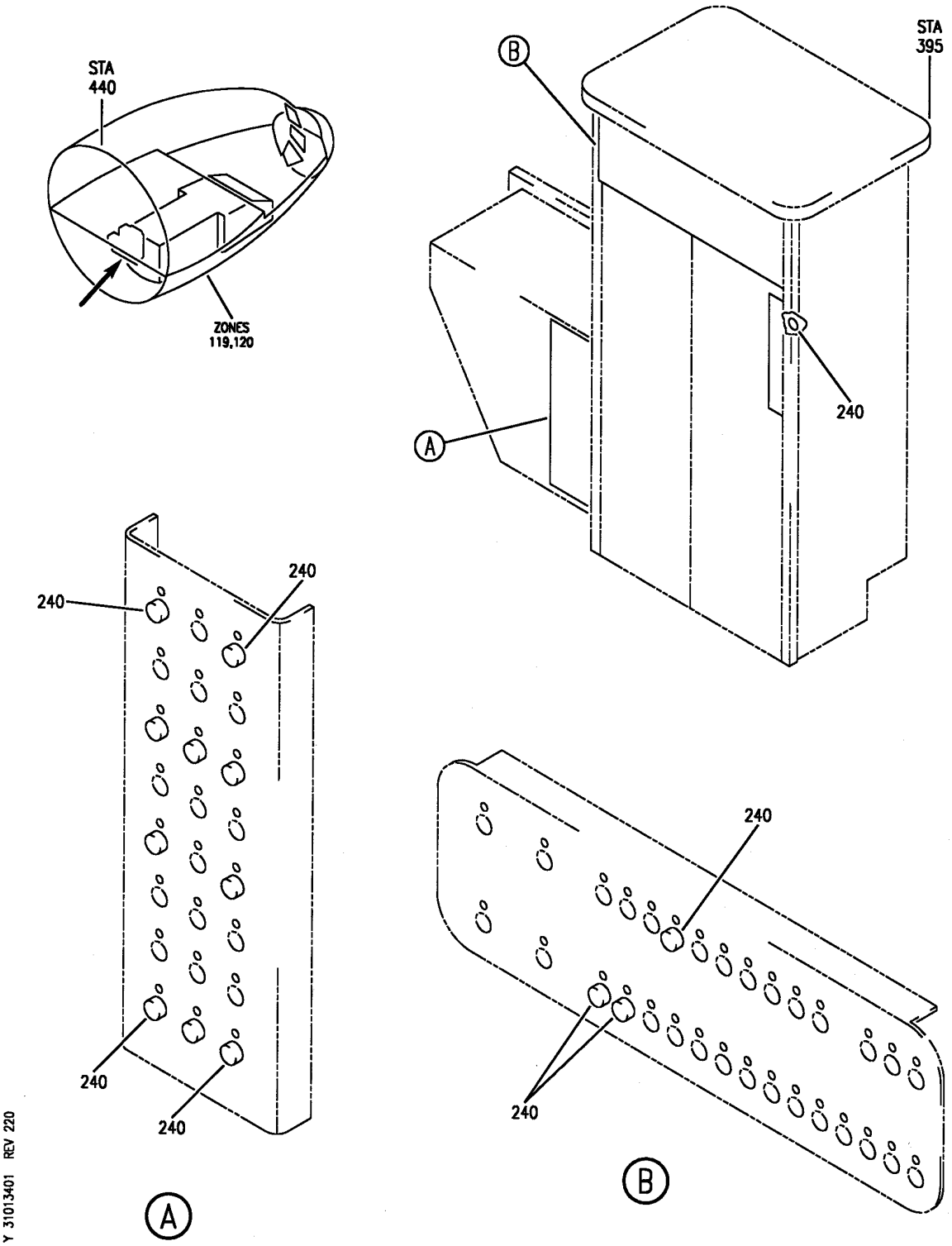

PANEL INSTL AND ASSY-P34 PWR APU/EXTERNAL
FIGURE 1

BOEING PROPRIETARY - Copyright © - Unpublished Work - See title page for details.

FIG ITEM	PART NUMBER	1 2 3 4 5 6 7 NOMENCLATURE	EFFECT FROM TO	UNITS PER ASSY
1				
		PANEL INSTL AND ASSY-P34	101102	
		PWR APU/EXTERNAL	504903	
- 1	284N1316-112	PANEL INSTL-P34 PWR	504903	RF
		FOR NHA SEE:		
		24-00-58-05C		
- 2	284N1316-119	PANEL INSTL-P34 PWR	101102	RF
		FOR NHA SEE:		
		24-00-58-05C		
- 5	284N1316-1000	.PACKAGE ASSY-OPTION P34	101102	1
		MISCELLANEOUS DATA:	504903	
		757 MAJOR MODEL OPTION		
		FUNCTIONAL REFERENCE:		
		PLACARDS AND MARKINGS		
		FOR DETAILS SEE		
		11-36-09-02A		
		ELECTRICAL POWER		
		FOR DETAILS SEE		
		24-21-63-01A		
		24-22-02-02A		
		24-23-01-03A		
		24-41-01-01A		
		24-51-01-01A		
		24-51-03-03A		
		24-51-04-02A		
		24-51-54-03A		
		24-53-73-01A		
		24-54-01-01A		
		EQUIPMENT/FURNISHINGS		
		FOR DETAILS SEE		
		25-71-51-10		
		LIGHTS		
		FOR DETAILS SEE		
		33-42-71-01A		

MISSING ITEM NUMBERS NOT APPLICABLE

- ITEM NOT ILLUSTRATED

BOEING PROPRIETARY - Copyright © - Unpublished Work - See title page for details.

FIG ITEM	PART NUMBER	1 2 3 4 5 6 7 NOMENCLATURE	EFFECT FROM TO	UNITS PER ASSY
1				
- 10	284N1316-1001	.PACKAGE ASSY-OPTION P34 MISCELLANEOUS DATA: MINOR MODEL 757-200 PASSENGER FUNCTIONAL REFERENCE: ELECTRICAL POWER FOR DETAILS SEE 24-51-54-03A EQUIPMENT/FURNISHINGS FOR DETAILS SEE 25-71-51-10 LIGHTS FOR DETAILS SEE 33-21-71-01A 33-22-71-01A 33-24-71-01A WATER/WASTE FOR DETAILS SEE 38-14-71-01A	101102 504903	1
- 15	284N1316-1002	.PACKAGE ASSY-OPTION P34 MISCELLANEOUS DATA: ETOPS OPTION FUNCTIONAL REFERENCE: ELECTRICAL POWER FOR DETAILS SEE 24-51-54-03A EQUIPMENT/FURNISHINGS FOR DETAILS SEE 25-71-51-11 LIGHTS FOR DETAILS SEE 33-22-71-01A	101102	1
- 20	284N1316-1003	.PACKAGE ASSY-OPTION P34 MISCELLANEOUS DATA: ETOPS OPTION AND 4 LAVS TOTAL COMBINATION FOR DETAILS SEE: 24-51-54-03A	101102	1
- 30	284N1316-1005	.PACKAGE ASSY-OPTION P34 MISCELLANEOUS DATA: PASS CABIN LIGHTING - SINGLE ZONE CONTROL FOR DETAILS SEE: 33-21-71-01A	101102 504903	1

MISSING ITEM NUMBERS NOT APPLICABLE

- ITEM NOT ILLUSTRATED

BOEING PROPRIETARY - Copyright © - Unpublished Work - See title page for details.

FIG ITEM	PART NUMBER	1 2 3 4 5 6 7 NOMENCLATURE	EFFECT FROM TO	UNITS PER ASSY
1				
- 40	284N1316-1007	.PACKAGE ASSY-OPTION P34 MISCELLANEOUS DATA: MINOR MODEL 757-200 PASSENGER AND 4 LAVS TOTAL COMBINATION FOR DETAILS SEE: 24-51-54-03A	101102 504903	1
- 50	284N1316-1009	.PACKAGE ASSY-OPTION P34 MISCELLANEOUS DATA: REMOTE CREW OXYGEN FILL FOR DETAILS SEE: 24-51-54-03A	101102 504903	1
- 55	284N1316-1010	.PACKAGE ASSY-OPTION P34 MISCELLANEOUS DATA: ACE CARGO LOADER, FWD FOR DETAILS SEE: 24-51-54-03A	504903	1
- 60	284N1316-1011	.PACKAGE ASSY-OPTION P34 MISCELLANEOUS DATA: ACE CARGO LOADER, AFT FOR DETAILS SEE: 24-51-54-03A	504903	1
- 65	284N1316-1012	.PACKAGE ASSY-OPTION P34 MISCELLANEOUS DATA: MINOR MODEL 757-200 PASSENGER AND NO CARGO LOADER SYSTEM, FWD OR AFT AND NO OTHER OPTIONS INPLATE A ROW B FOR DETAILS SEE: 25-71-51-11	101102	1
- 70	284N1316-1013	.PACKAGE ASSY-OPTION P34 MISCELLANEOUS DATA: MINOR MODEL 757-200 PASSENGER AND NO CARGO LOADER SYSTEM, FWD OR AFT AND NO OTHER OPTIONS INPLATE A ROW A FOR DETAILS SEE: 25-71-51-11	101102	1
- 80	284N1316-1015	.PACKAGE ASSY-OPTION P34 MISCELLANEOUS DATA: MINOR MODEL 757-200 PASSENGER AND NO OTHER OPTIONS IN PLATE B ROW C FOR DETAILS SEE: 25-71-51-11	101102 504903	1

MISSING ITEM NUMBERS NOT APPLICABLE

- ITEM NOT ILLUSTRATED

BOEING PROPRIETARY - Copyright © - Unpublished Work - See title page for details.

FIG ITEM	PART NUMBER	1 2 3 4 5 6 7 NOMENCLATURE	EFFECT FROM TO	UNITS PER ASSY
1				
- 85	284N1316-1016	.PACKAGE ASSY-OPTION P34 MISCELLANEOUS DATA: MINOR MODEL 757-200 PASSENGER AND NO OTHER OPTIONS IN PLATE B ROW D FOR DETAILS SEE: 25-71-51-11	101102 504903	1
- 90	284N1316-1017	.PACKAGE ASSY-OPTION P34 MISCELLANEOUS DATA: MINOR MODEL 757-200 PASSENGER AND NO OTHER OPTIONS IN PLATE B ROW E FOR DETAILS SEE: 25-71-51-11	101102 504903	1
- 95	284N1316-1018	.PACKAGE ASSY-OPTION P34 MISCELLANEOUS DATA: MINOR MODEL 757-200 PASSENGER AND NO OTHER OPTIONS IN PLATE B ROW F FOR DETAILS SEE: 25-71-51-11	101102 504903	1
- 100	284N1316-1019	.PACKAGE ASSY-OPTION P34 MISCELLANEOUS DATA: MINOR MODEL 757-200 PASSENGER AND NO OTHER OPTIONS IN PLATE B ROW H FOR DETAILS SEE: 25-71-51-11	101102 504903	1
- 105	284N1316-1020	.PACKAGE ASSY-OPTION P34 MISCELLANEOUS DATA: MINOR MODEL 757-200 PASSENGER AND REMOTE OXYGEN FILL AND NO OTHER OPTIONS IN PLATE B ROW B FOR DETAILS SEE: 25-71-51-11	101102 504903	1
- 125	284N1316-1025	.PACKAGE ASSY-OPTION P34 MISCELLANEOUS DATA: PLATE A ROW A 757 PASSENGER AND FWD AND AFT SBC LOADING SYSTEM FOR DETAILS SEE: 25-71-51-11	504903	1

MISSING ITEM NUMBERS NOT APPLICABLE

- ITEM NOT ILLUSTRATED

BOEING PROPRIETARY - Copyright © - Unpublished Work - See title page for details.

FIG ITEM	PART NUMBER	1 2 3 4 5 6 7 NOMENCLATURE	EFFECT FROM TO	UNITS PER ASSY
1				
- 130	284N1316-1026	.PACKAGE ASSY-OPTION P34 MISCELLANEOUS DATA: PLATE A ROW B 757 PASSENGER AND FWD AND AFT SBC LOADING SYSTEM FOR DETAILS SEE: 25-71-51-11	504903	1
- 135	284N1316-1027	.PACKAGE ASSY-OPTION P34 MISCELLANEOUS DATA: 10,000 FT CABIN PRESSURE FOR DETAILS SEE: 33-24-71-01A	504903	1
- 200	284N1316-1041	.PACKAGE ASSY-OPTION P34 MISCELLANEOUS DATA: CEILING LIGHTS FUNCTIONAL REFERENCE: EQUIPMENT/FURNISHINGS FOR DETAILS SEE 25-71-51-10 LIGHTS FOR DETAILS SEE 33-22-71-01A	101102	1
- 255	BACP20B43B	.PLUG- MISCELLANEOUS DATA: USE IN PLACE OF CIRCUIT BREAKERS ON OPEN HOLES	504903	17
- 260	BACP20B43B	.PLUG- MISCELLANEOUS DATA: USE IN PLACE OF CIRCUIT BREAKERS ON OPEN HOLES	101102	18

MISSING ITEM NUMBERS NOT APPLICABLE

- ITEM NOT ILLUSTRATED

BOEING PROPRIETARY - Copyright © - Unpublished Work - See title page for details.

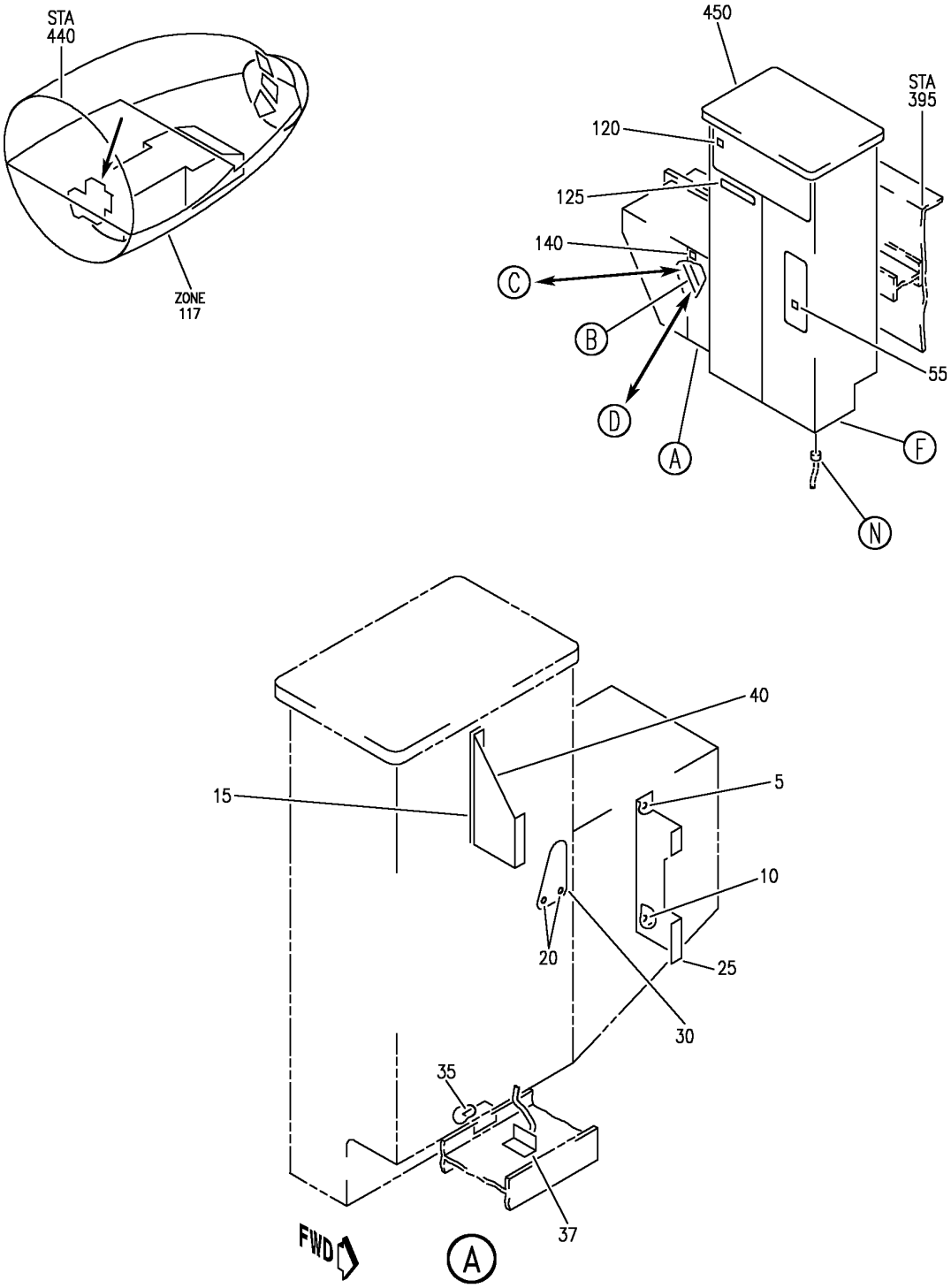

PANEL INSTL-P31, P32 AND P34 PWR (APU/EXTERNAL POWER PANELS ONLY)
FIGURE 2 (SHEET 1)

BOEING PROPRIETARY - Copyright © - Unpublished Work - See title page for details.

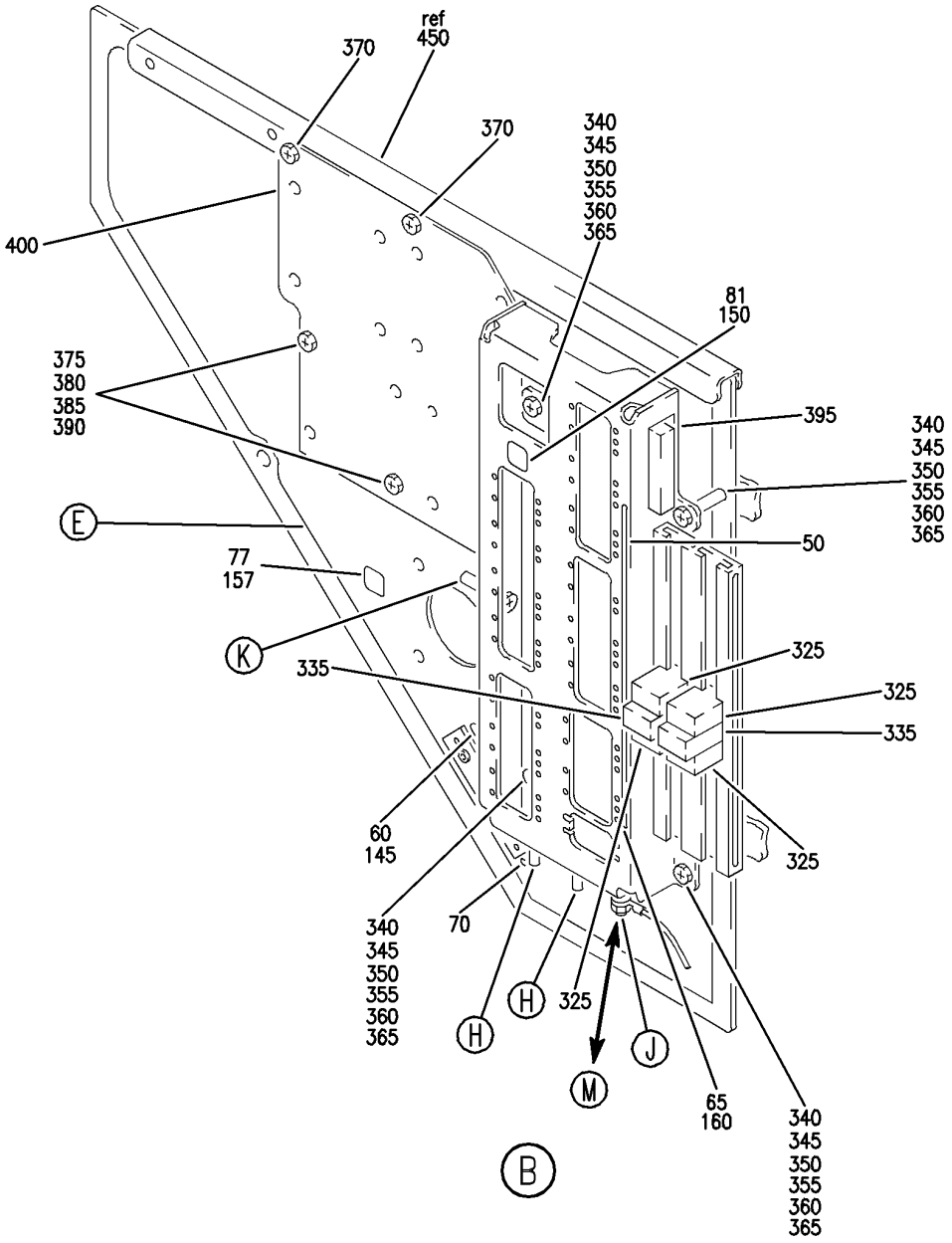

Y 31013402 SHT 2 REV 229

PANEL INSTL-P31, P32 AND P34 PWR (APU/EXTERNAL POWER PANELS ONLY)
FIGURE 2 (SHEET 2)

BOEING PROPRIETARY - Copyright © - Unpublished Work - See title page for details.

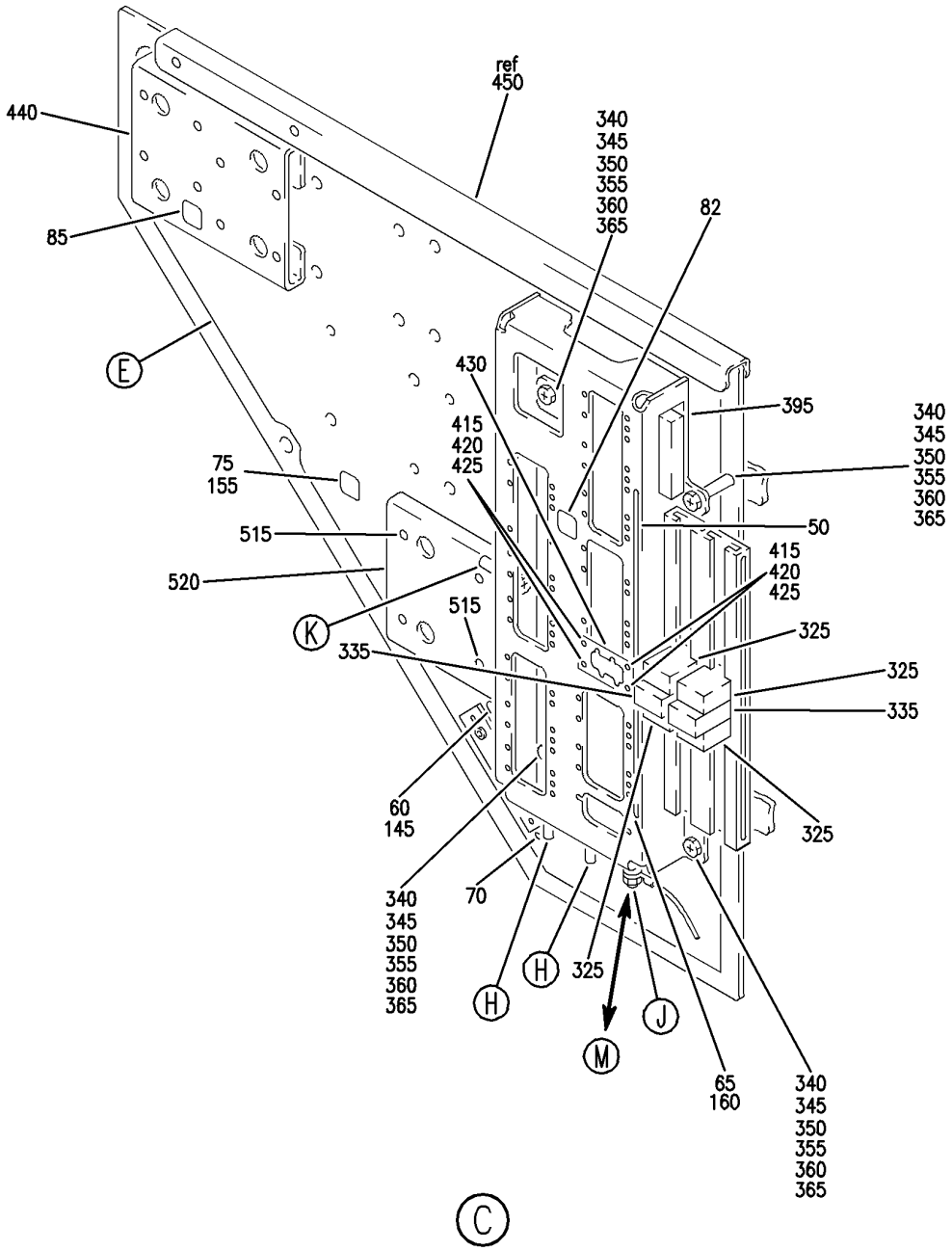

PANEL INSTL-P31, P32 AND P34 PWR (APU/EXTERNAL POWER PANELS ONLY)
FIGURE 2 (SHEET 3)

BOEING PROPRIETARY - Copyright © - Unpublished Work - See title page for details.

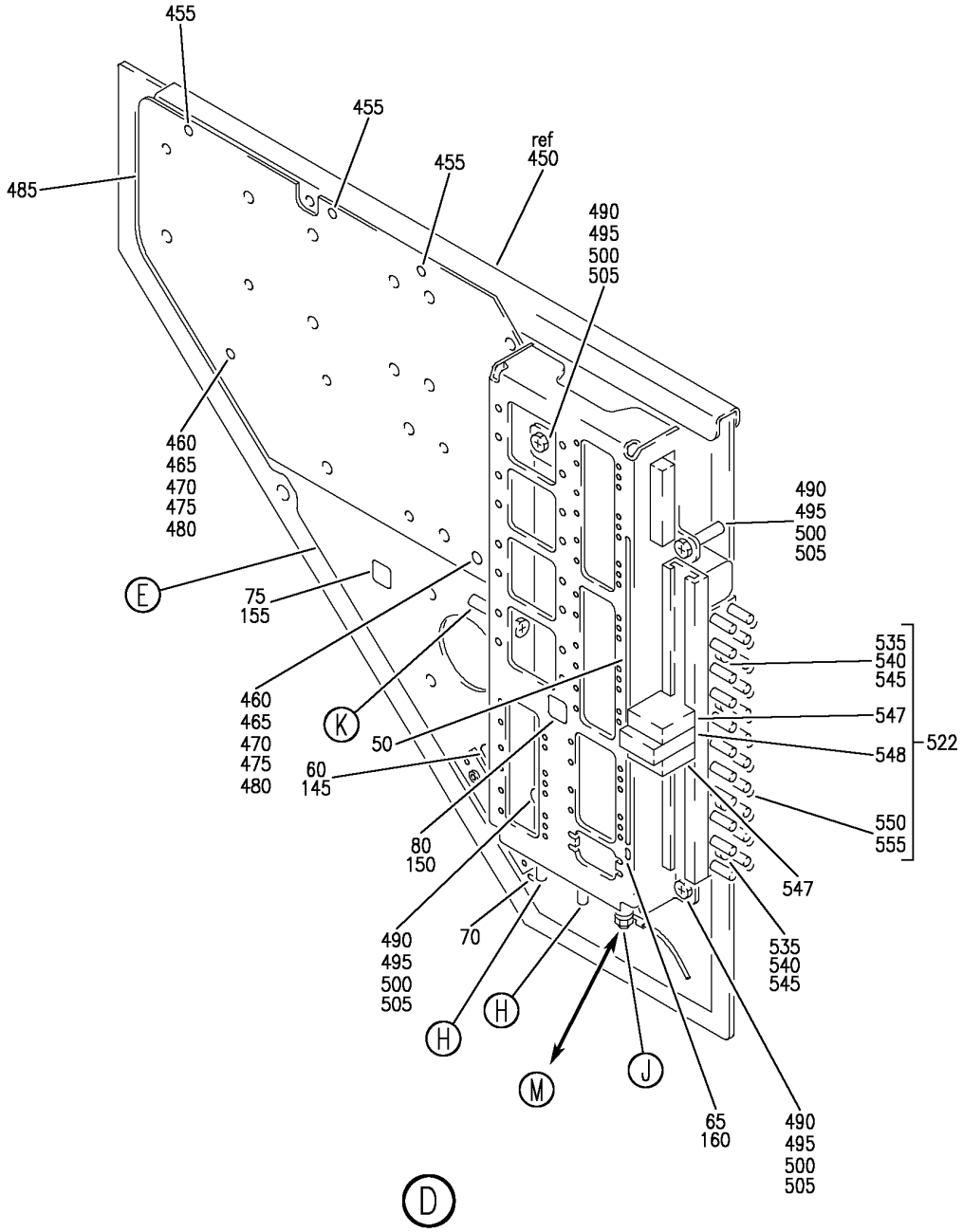

Y 31013402 SHT 4 REV 331

PANEL INSTL-P31, P32 AND P34 PWR (APU/EXTERNAL POWER PANELS ONLY)
FIGURE 2 (SHEET 4)

BOEING PROPRIETARY - Copyright © - Unpublished Work - See title page for details.

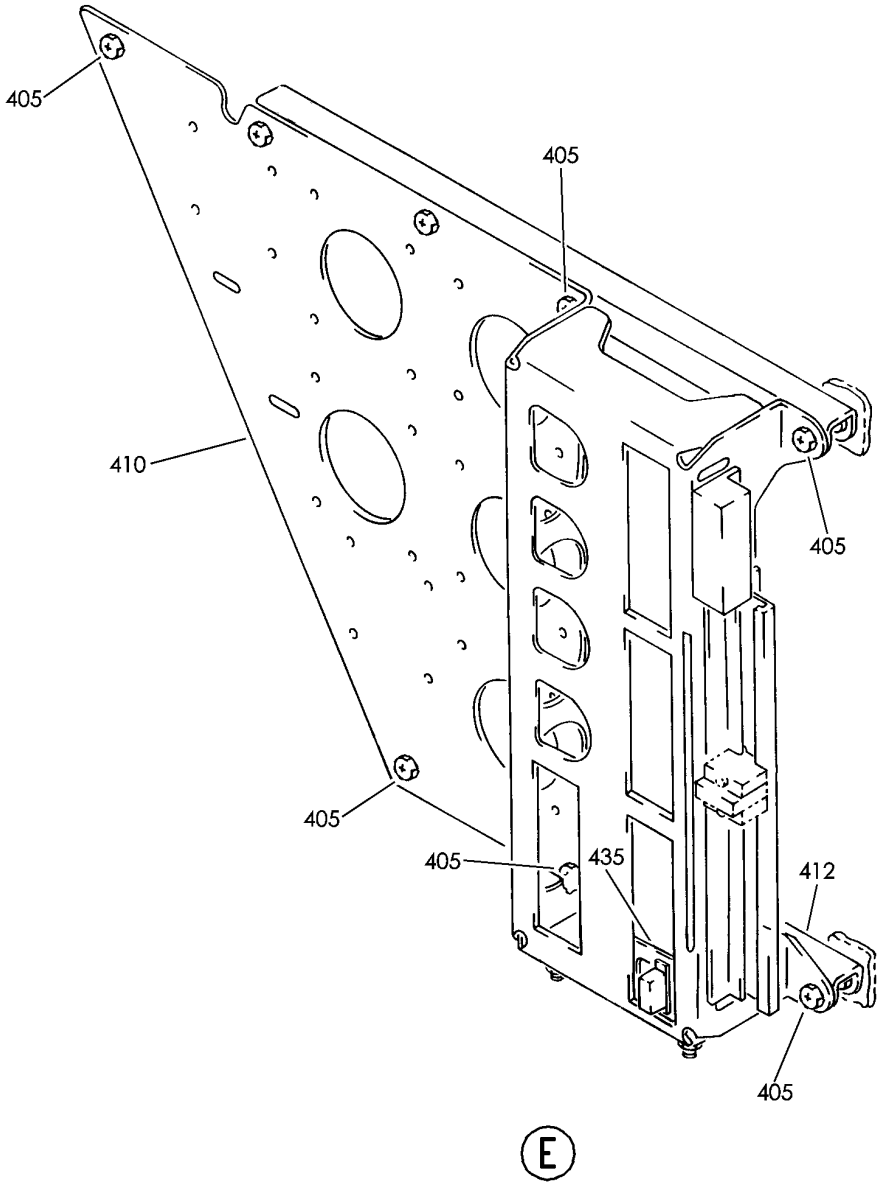

Y 31013402 SHT 5 REV 229

PANEL INSTL-P31, P32 AND P34 PWR (APU/EXTERNAL POWER PANELS ONLY)
FIGURE 2 (SHEET 5)

BOEING PROPRIETARY - Copyright © - Unpublished Work - See title page for details.

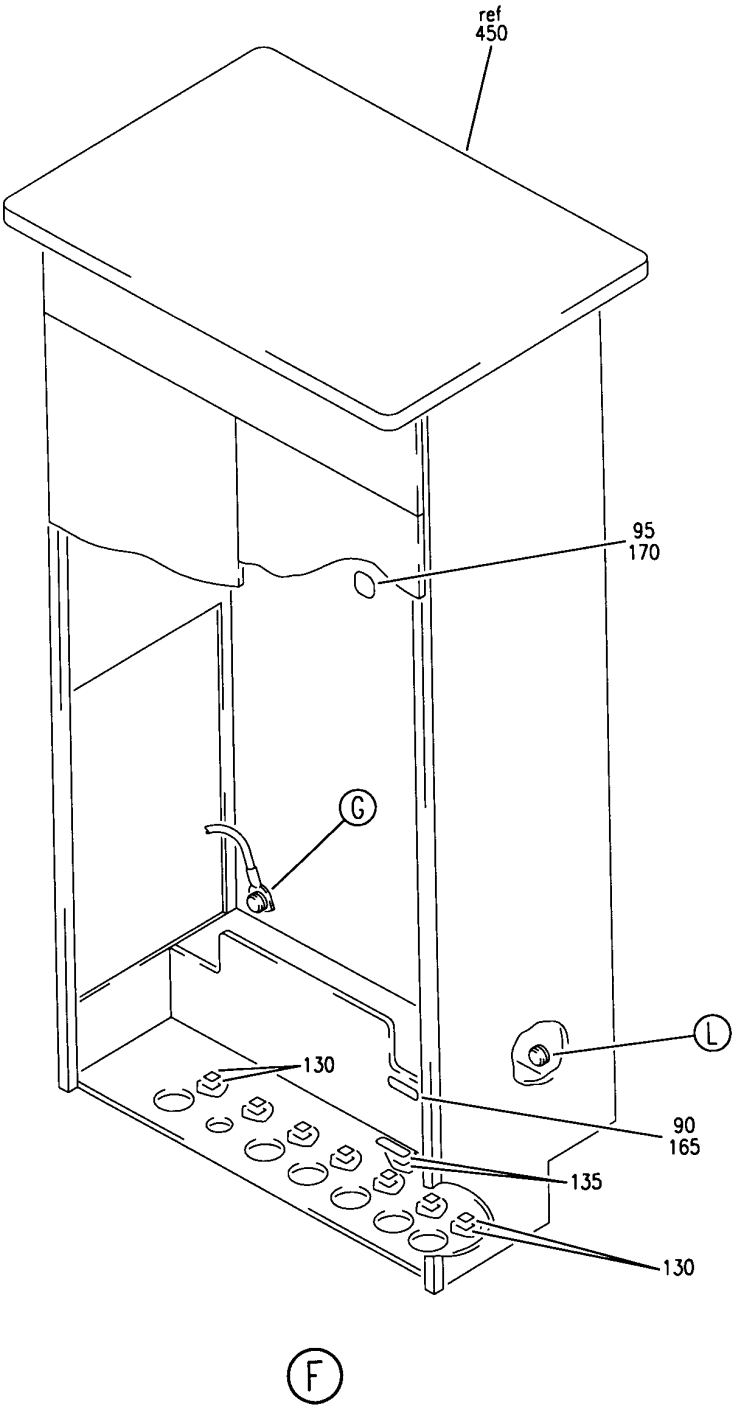

Y 31013402 SHT 6 REV 229

PANEL INSTL-P31, P32 AND P34 PWR (APU/EXTERNAL POWER PANELS ONLY)
FIGURE 2 (SHEET 6)

BOEING PROPRIETARY - Copyright © - Unpublished Work - See title page for details.

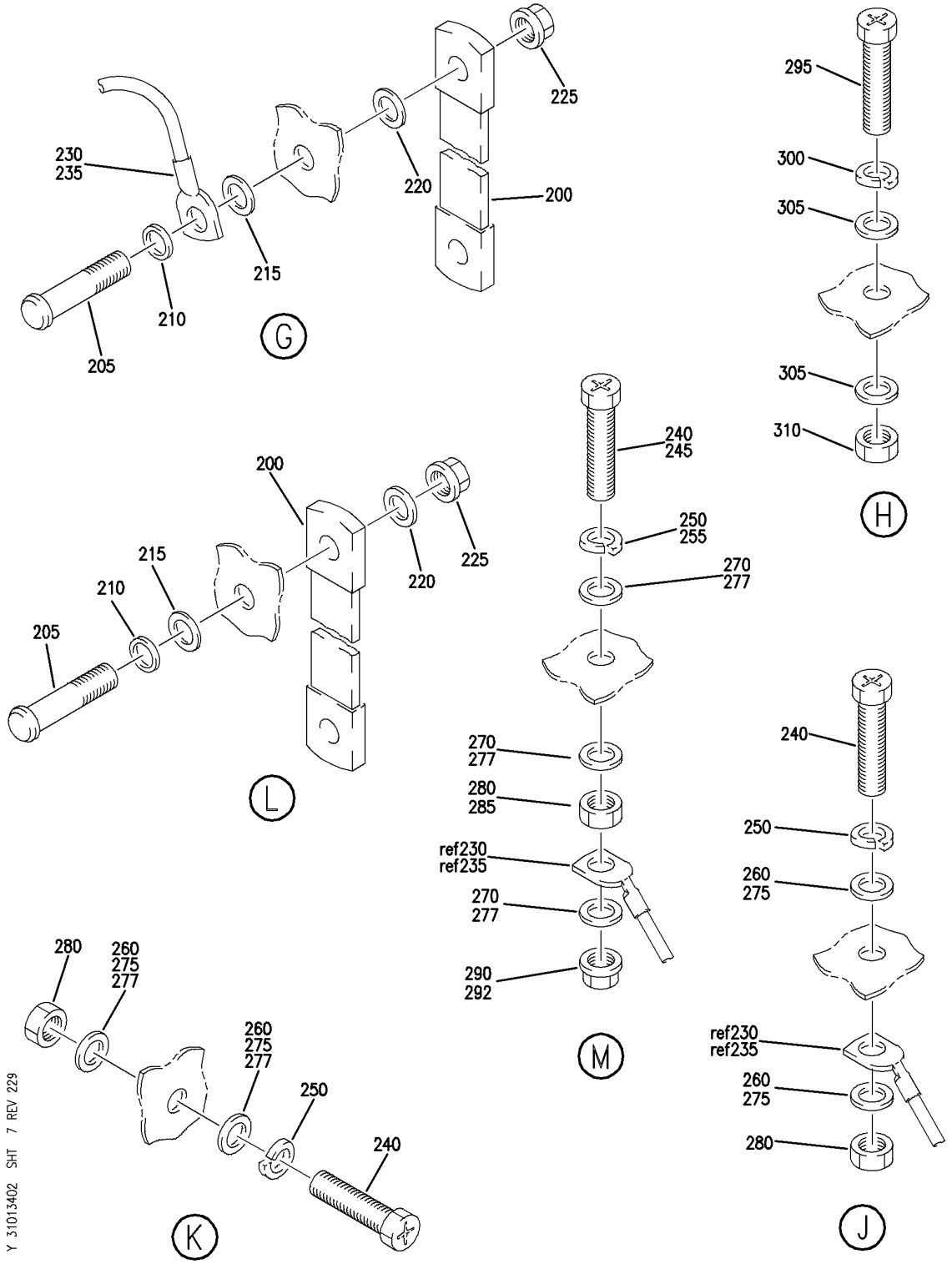

PANEL INSTL-P31, P32 AND P34 PWR (APU/EXTERNAL POWER PANELS ONLY)
FIGURE 2 (SHEET 7)

BOEING PROPRIETARY - Copyright © - Unpublished Work - See title page for details.

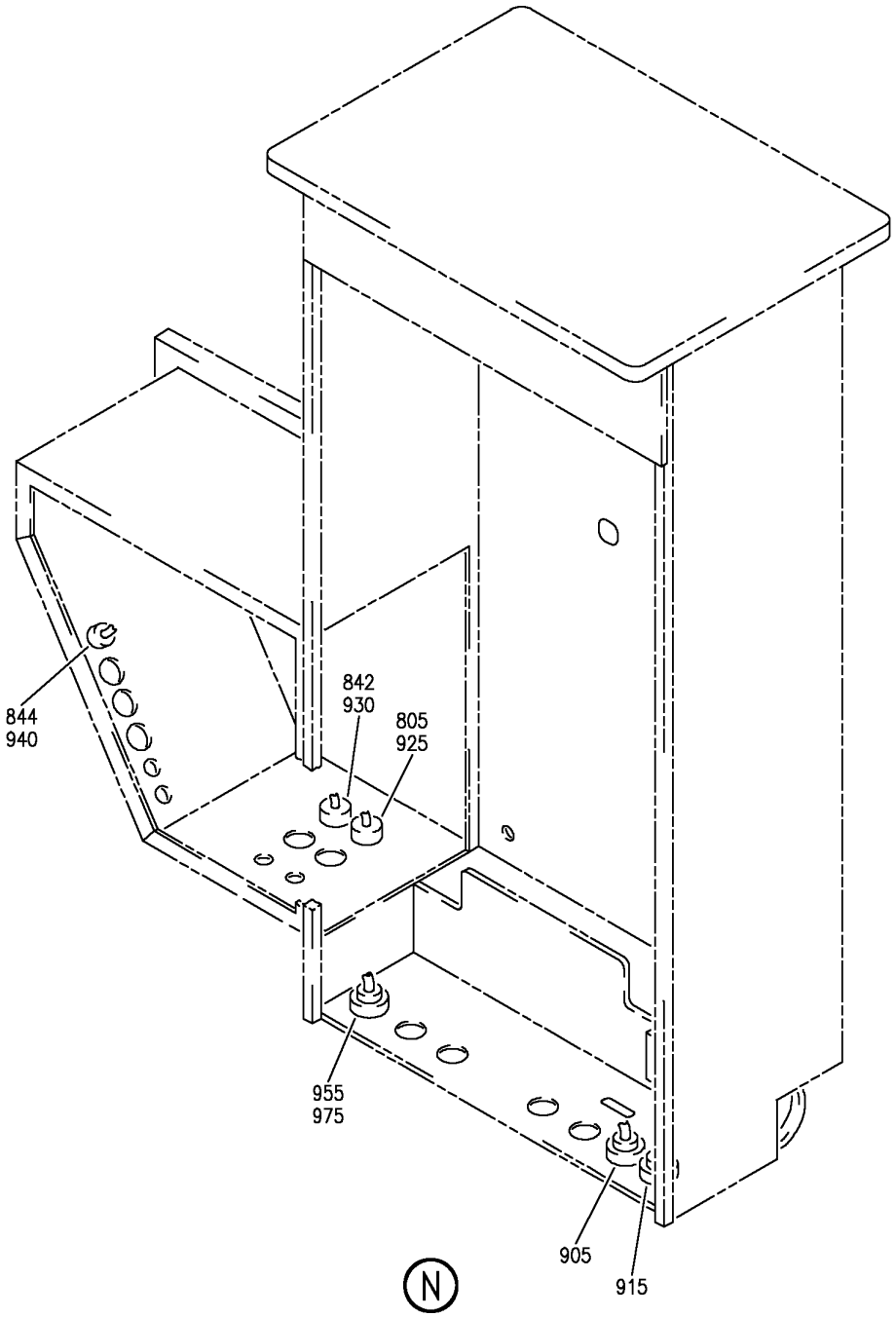

Y 31013402 SHT 8 REV 279

PANEL INSTL-P31, P32 AND P34 PWR (APU/EXTERNAL POWER PANELS ONLY)
FIGURE 2 (SHEET 8)

BOEING PROPRIETARY - Copyright © - Unpublished Work - See title page for details.

FIG ITEM	PART NUMBER	1 2 3 4 5 6 7 NOMENCLATURE	EFFECT FROM TO	UNITS PER ASSY
2		PANEL INSTL-P31, P32 AND P34 PWR (APU/EXTERNAL POWER PANELS ONLY)	002004 006100 107107 121503 904999	
- 1	284N1317-6	PANEL INSTL-P31, P32 AND P34 PWR (APU/EXTERNAL POWER PANELS ONLY) FOR NHA/ADDITIONAL DET SEE: 24-00-58-01C	107107	RF
- 1	284N1317-7	PANEL INSTL-P31, P32 AND P34 PWR (APU/EXTERNAL POWER PANELS ONLY) FOR NHA/ADDITIONAL DET SEE: 24-00-58-01C	904949	RF
- 1	284N1317-8	PANEL INSTL-P31, P32 AND P34 PWR (APU/EXTERNAL POWER PANELS ONLY) FOR NHA/ADDITIONAL DET SEE: 24-00-58-01C	002004 006007 121503 952999	RF
- 1	284N1317-9	PANEL INSTL-P31, P32 AND P34 PWR (APU/EXTERNAL POWER PANELS ONLY) FOR NHA/ADDITIONAL DET SEE: 24-00-58-01C	008100 950951	RF
5	BACB30NE4-14	.BOLT	002004 006100 107107 121503 904999	1
10	BACB30NE4-2	.BOLT	002004 006100 107107 121503 904999	1
15	284N1330-1	.SPACER	002004 006100 107107 121503 904999	1
15	284N1330-3	.SPACER	002004 006100 121503 904999	1
20	BACR15BA5D	.RIVET	002004 006100 107107 121503 904999	2

MISSING ITEM NUMBERS NOT APPLICABLE

- ITEM NOT ILLUSTRATED

BOEING PROPRIETARY - Copyright © - Unpublished Work - See title page for details.

FIG ITEM	PART NUMBER	1 2 3 4 5 6 7 NOMENCLATURE	EFFECT FROM TO	UNITS PER ASSY
2				
25	284N1365-33	.BRACKET ASSY	002004 006007 107107 121503 952999	1
25	284N1365-65	.BRACKET ASSY	008100 950951	1
30	284N1365-17	.BRACKET ASSY	002004 006100 107107 121503 904999	1
35	284N1365-35	.BRACKET ASSY	107107	1
35	284N1365-53	.BRACKET ASSY	107107	1
37	284N1365-64	.BRACKET ASSY	002004 006100 121503 904999	1
40	284N1365-11	.BRACKET ASSY- OPTIONAL PART: 284N1365-39	107107	1
40	284N1365-39	.BRACKET ASSY- OPTIONAL PART: 284N1365-11 PRE SERVICE BULLETIN: 24-0023	107107	1
40	284N1365-54	.BRACKET ASSY-	107107	1
40	284N1365-60	.BRACKET ASSY	002004 006100 107107 121503 904999	1

MISSING ITEM NUMBERS NOT APPLICABLE

– ITEM NOT ILLUSTRATED

BOEING PROPRIETARY - Copyright © - Unpublished Work - See title page for details.

FIG ITEM	PART NUMBER	1 2 3 4 5 6 7 NOMENCLATURE	EFFECT FROM TO	UNITS PER ASSY
2				
- 45	284N1316-1	.PANEL ASSY-P34 APU/EXT PWR	002004	1
		VARIABLE DRAWING REF:	006100	
		284N1316-5023	107107	
		284N1316-5047	121503	
		284N1316-5063	904999	
		284N1316-5064		
		284N1316-5067		
		FUNCTIONAL REFERENCE:		
		PLACARDS AND MARKINGS		
		FOR DETAILS SEE		
		11-36-09-02		
		ELECTRICAL POWER		
		FOR DETAILS SEE		
		24-21-63-01		
		24-22-02-02		
		24-23-65-03		
		24-41-01-01		
		24-51-01-01		
		24-51-54-03		
		24-53-73-01		
		24-54-65-01		
		LIGHTS		
		FOR DETAILS SEE		
		33-21-71-01		
		33-22-71-01		
		33-24-71-01		
		33-42-71-01		
		WATER/WASTE		
		FOR DETAILS SEE		
		38-14-71-01		
80	BAC27NEX0248	..DECAL-	002004	1
		PLACARD CONTENT:	006100	
		F	107107	
			121503	
			904999	
85	BAC27NEX0249	..DECAL-	107107	1
		PLACARD CONTENT:	121503	
		G	904949	
- 100	284N1316-6001	..DECAL ASSY	002004	1
			006100	
			107107	
			121503	
			904999	
- 115	284N1316-6004	..DECAL ASSY	950951	1
120	BAC27NEX0173	...DECAL-	002004	1
		PLACARD CONTENT:	006100	
		A	107107	
			121503	
			904999	

MISSING ITEM NUMBERS NOT APPLICABLE

- ITEM NOT ILLUSTRATED

BOEING PROPRIETARY - Copyright © - Unpublished Work - See title page for details.

FIG ITEM	PART NUMBER	1 2 3 4 5 6 7 NOMENCLATURE	EFFECT FROM TO	UNITS PER ASSY
2				
125	BAC27TEX0103	...DECAL- PLACARD CONTENT: P34 APU EXT POWER	002004 006100 107107 121503 904999	1
130	BAC27TEX8	...DECAL	002004 006100 107107 121503 904999	2
135	BAC27NEX0594	...DECAL- PLACARD CONTENT: AP0034	002004 006100 107107 121503 904999	2
140	BAC27NEX0174	...DECAL- PLACARD CONTENT: B	002004 006100 107107 121503 904999	1
145	BAC27NEX0773	...DECAL- PLACARD CONTENT: 1 THRU 4	002004 006100 107107 121503 904999	1
155	BAC27NEX0176	...DECAL- PLACARD CONTENT: D	002004 006100 107107 121503 904999	1
160	BAC27NEX0362	...DECAL- PLACARD CONTENT: TB47	002004 006100 107107 121503 904999	1
165	BAC27NEX0366	...DECAL- PLACARD CONTENT: TB0134	002004 006100 107107 121503 904999	1
200	RBEJ40E22-48	..JUMPER ASSY SUPPLIER CODE: V1GK47 SPECIFICATION NUMBER: BACJ40E22-48 OPTIONAL PART: 740E22-48 V91812	002004 006100 107107 121503 904999	2

MISSING ITEM NUMBERS NOT APPLICABLE

– ITEM NOT ILLUSTRATED

BOEING PROPRIETARY - Copyright © - Unpublished Work - See title page for details.

FIG ITEM	PART NUMBER	1 2 3 4 5 6 7 NOMENCLATURE	EFFECT FROM TO	UNITS PER ASSY
2				
205	HL1050PB12-5	..BOLT	002004	2
		SUPPLIER CODE:	006100	
		V97928	107107	
		SPECIFICATION NUMBER:	121503	
		BACB30MB12-5	904999	
		OPTIONAL PART:		
		HL20PB12-5		
		V73197		
		HL20PB12-5		
		V92215		
		HL20PB12-5		
		V97928		
		69307-12-5		
		V56878		
		HL20PB12-5		
		V80539		
		L80612-5		
		V06725		
		HL20PB12-5		
		V60516		
		HL20PB12-5		
		V08524		
		HL20-12-5		
		V06725		
		HL20PB12-5		
		V56878		
		WC80612-5		
		V60516		
		HL1050PB12-5		
		V56878		
		HL1050PB12-5		
		V60516		
		HL1050PB12-5		
		V73197		
		HL1050PB12-5		
		V80539		
210	BACW10CT12	..WASHER	002004	2
			006100	
			107107	
			121503	
			904999	
215	AN960PD616L	..WASHER	002004	2
			006100	
			107107	
			121503	
			904999	

MISSING ITEM NUMBERS NOT APPLICABLE

– ITEM NOT ILLUSTRATED

BOEING PROPRIETARY - Copyright © - Unpublished Work - See title page for details.

FIG ITEM	PART NUMBER	1 2 3 4 5 6 7 NOMENCLATURE	EFFECT FROM TO	UNITS PER ASSY
2				
220	AN960-616	..WASHER	002004 006100 107107 121503 904999	2
225	BRH10A6	..NUT SUPPLIER CODE: V52828 SPECIFICATION NUMBER: BACN10JC6 OPTIONAL PART: 96-064 V80539 RMLH9075-6 V72962 H10-6BAC V15653	002004 006100 107107 121503 904999	2
235	BACJ40A31-7	..JUMPER	002004 006100 107107 121503 904999	1
240	NAS1801-4-12	..SCREW	002004 006100 107107 121503 904999	2
250	MS35338-44	..WASHER	002004 006100 107107 121503 904999	2
260	AN960D416L	..WASHER	002004 006100 107107 121503 904999	4
275	NAS1149D0416J	..WASHER	107107 952999	4
277	NAS1149D0416J	..WASHER	002004 006100 107107 121503 904999	5
280	MS35650-3255T	..NUT	002004 006100 107107 121503 904999	2

MISSING ITEM NUMBERS NOT APPLICABLE

– ITEM NOT ILLUSTRATED

BOEING PROPRIETARY - Copyright © - Unpublished Work - See title page for details.

FIG ITEM	PART NUMBER	1 2 3 4 5 6 7 NOMENCLATURE	EFFECT FROM TO	UNITS PER ASSY
2				
292	MS21042L4	..NUT	002004 006100 107107 121503 904999	1
295	NAS1801-3-12	..SCREW	002004 006100 107107 121503 904999	2
300	MS35338-43	..WASHER	002004 006100 107107 121503 904999	2
305	NAS1149D0316J	..WASHER	107107 952999	4
305	AN960D10L	..WASHER	002004 006100 121503 904951	4
310	MS35650-305T	..NUT	002004 006100 107107 121503 904999	2
340	NAS1801-3-20	..SCREW-	002004 006100 107107 121503 904949 952999	4
350	NAS1149D0316J	..WASHER	107107 952999	4
355	AN960D10L	..WASHER	002004 006100 121503 904949	4
365	NAS43DD3-48FC	..SPACER	107107	4
365	NAS43DD3-64	..SPACER	952999	4
375	NAS1801-3-18	..SCREW	002004 006100 121503 904949 952999	2

MISSING ITEM NUMBERS NOT APPLICABLE

– ITEM NOT ILLUSTRATED

BOEING PROPRIETARY - Copyright © - Unpublished Work - See title page for details.

FIG ITEM	PART NUMBER	1 2 3 4 5 6 7 NOMENCLATURE	EFFECT FROM TO	UNITS PER ASSY
2				
385	NAS43DD3-48	..SPACER	002004 006100 121503 904949 952999	2
395	284N1373-152	..PLATE ASSY-MTG OPTIONAL PART: 284N1373-155	121503 904949	1
395	284N1373-150	..PLATE ASSY-MTG OPTIONAL PART: 284N1373-155	002004 006100 950999	1
400	284N1788-1	..PLATE ASSY-MTG	002004 006100 121503 904949 952999	1
440	284N1373-140	..PANEL ASSY	107107 121503 904949	1
450	13441000-5	..ENCLOSURE ASSY- SUPPLIER CODE: V23296 OPTIONAL PART: 284N1074-16	002004 006100 107107 121503 904999	1
450	284N1074-16	..ENCLOSURE ASSY- OPTIONAL PART: 13441000-5 V23296	002004 006100 107107 950999	1
515	NAS1801-3-8	..SCREW	107107 121503 904949	4
520	284N1373-157	..PANEL ASSY	107107 121503 904949	1
535	NAS1801-04-6	...SCREW	002004 006100 107107 121503 904999	4
540	AN960KD4L	...WASHER	002004 006100 107107 121503 904999	4
545	MS21042L04	...NUT- OPTIONAL PART: BACN10JC04CD	002004 006100 107107 121503 904999	4

MISSING ITEM NUMBERS NOT APPLICABLE

– ITEM NOT ILLUSTRATED

BOEING PROPRIETARY - Copyright © - Unpublished Work - See title page for details.

FIG ITEM	PART NUMBER	1 2 3 4 5 6 7 NOMENCLATURE	EFFECT FROM TO	UNITS PER ASSY
2				
545	BRH10C04D	...NUT-	002004	4
		SUPPLIER CODE:	006100	
		V52828	107107	
		SPECIFICATION NUMBER:	121503	
		BACN10JC04CD	904999	
		OPTIONAL PART:		
		H51650-04BAC		
		V15653		
		102LH9075-40W		
		V72962		
		NS202486-40		
		V80539		
		T6C440JCD		
		V11815		
		T6C440JCD		
		V11815		
		MS21042L04		
547	BACC49A1	..CLAMP	002004	2
		SUPPLIER CODE:	006100	
		V09922	107107	
		SPECIFICATION NUMBER:	121503	
		BACC49A1	904999	
		OPTIONAL PART:		
		FAB278		
		V15805		
		H28-1		
		V34941		
		UP103		
		V6E102		
548	H21-1	...SPACER	002004	1
		SUPPLIER CODE:	006100	
		V34941	107107	
		SPECIFICATION NUMBER:	121503	
		BACS18AR1	904999	
		OPTIONAL PART:		
		FAB276A		
		V15805		
		YHLZ1C2		
		V09922		
550	MS18029-2S10	...COVER ASSY	002004	1
			006100	
			107107	
			121503	
			904999	
555	MS27212-2-10	...BOARD ASSY	002004	1
			006100	
			107107	
			121503	
			904999	

MISSING ITEM NUMBERS NOT APPLICABLE

– ITEM NOT ILLUSTRATED

BOEING PROPRIETARY - Copyright © - Unpublished Work - See title page for details.

FIG ITEM	PART NUMBER	1 2 3 4 5 6 7 NOMENCLATURE	EFFECT FROM TO	UNITS PER ASSY
2				
- 600	286N1128-001	..WIRE BUNDLE ASSY	107107 121503 904949	1
- 600	286N1128-002	..WIRE BUNDLE ASSY	002004 006100 950999	1
- 610	YHLZD33	...TERMINAL- SUPPLIER CODE: V09922 ELECTRICAL EQUIP NUMBER: TB0134A WIRING DIAGRAM REF: 242241	002004 006100 107107 121503 904999	1
- 615	YHLZR17	...COMPONENT-RES. SUPPLIER CODE: V09922 ELECTRICAL EQUIP NUMBER: TB0134B WIRING DIAGRAM REF: 244111	002004 006100 107107 121503 904999	1
- 650	286N1134-001	..WIRE BUNDLE ASSY	107107 121503 904949	1
- 650	286N1134-002	..WIRE BUNDLE ASSY	002004 006100 950999	1
- 700	286N1190-001	..WIRE BUNDLE ASSY	121503 904949	1
- 700	286N1190-002	..WIRE BUNDLE ASSY	107107	1
- 700	286N1190-004	..WIRE BUNDLE ASSY	002004 006100 950999	1
- 750	286N1196-001	..WIRE BUNDLE ASSY	107107 121503 904949	1
- 750	286N1196-002	..WIRE BUNDLE ASSY-	002004 006100 950999	1
- 760	YHLZD29	...TERMINAL- SUPPLIER CODE: V09922 ELECTRICAL EQUIP NUMBER: TB0047A WIRING DIAGRAM REF: 334212	002004 006100 107107 121503 904999	1

MISSING ITEM NUMBERS NOT APPLICABLE

- ITEM NOT ILLUSTRATED

BOEING PROPRIETARY - Copyright © - Unpublished Work - See title page for details.

FIG ITEM	PART NUMBER	1 2 3 4 5 6 7 NOMENCLATURE	EFFECT FROM TO	UNITS PER ASSY
2				
- 765	YHLZ2	...MODULE-	002004	1
		SUPPLIER CODE:	006100	
		V09922	107107	
		SPECIFICATION NUMBER:	121503	
		BACM15C1A	904999	
		OPTIONAL PART:		
		YHLZ22		
		V09922		
		ELECTRICAL EQUIP NUMBER:		
		TB0047F		
		WIRING DIAGRAM REF:		
		332111		
- 800	286N1240-002	..WIRE BUNDLE ASSY	121503	1
			904949	
- 800	286N1240-003	..WIRE BUNDLE ASSY	107107	1
- 800	286N1240-006	..WIRE BUNDLE ASSY	002004	1
			006100	
			950999	
- 810	YHLZD29	...TERMINAL-	002004	1
		SUPPLIER CODE:	006100	
		V09922	107107	
		ELECTRICAL EQUIP NUMBER:	121503	
		TB0047A	904999	
		WIRING DIAGRAM REF:		
		334212		
- 815	YHLZ2	...MODULE-	002004	1
		SUPPLIER CODE:	006100	
		V09922	107107	
		SPECIFICATION NUMBER:	121503	
		BACM15C1A	904999	
		OPTIONAL PART:		
		YHLZ22		
		V09922		
		ELECTRICAL EQUIP NUMBER:		
		TB0047F		
		WIRING DIAGRAM REF:		
		332111		
- 820	YHLZ4	...MODULE-	002004	1
		SUPPLIER CODE:	006100	
		V09922	107107	
		SPECIFICATION NUMBER:	121503	
		BACM15C1B	904999	
		OPTIONAL PART:		
		YHLZ44		
		V09922		
		ELECTRICAL EQUIP NUMBER:		
		TB0047G		
		WIRING DIAGRAM REF:		
		332111		

MISSING ITEM NUMBERS NOT APPLICABLE

- ITEM NOT ILLUSTRATED

BOEING PROPRIETARY - Copyright © - Unpublished Work - See title page for details.

FIG ITEM	PART NUMBER	1 2 3 4 5 6 7 NOMENCLATURE	EFFECT FROM TO	UNITS PER ASSY
2				
- 825	YHLZ8	...MODULE-	002004	1
		SUPPLIER CODE:	006100	
		V09922	107107	
		SPECIFICATION NUMBER:	121503	
		BACM15C2A	904999	
		ELECTRICAL EQUIP NUMBER:		
		TB0047H		
		WIRING DIAGRAM REF:		
		332131		
- 830	YHLZ16-2	...MODULE-	002004	1
		SUPPLIER CODE:	006100	
		V09922	107107	
		SPECIFICATION NUMBER:	121503	
		BACM15C3A	904999	
		OPTIONAL PART:		
		TBH120450		
		V58982		
		421120-450		
		V58982		
		ELECTRICAL EQUIP NUMBER:		
		TB0047X		
		WIRING DIAGRAM REF:		
		245151		
- 835	YHLZ16-4	...MODULE-	002004	1
		SUPPLIER CODE:	006100	
		V09922	107107	
		SPECIFICATION NUMBER:	121503	
		BACM15C3B	904999	
		OPTIONAL PART:		
		421120-452		
		V58982		
		TBH120452		
		V58982		
		ELECTRICAL EQUIP NUMBER:		
		TB0047Y		
		WIRING DIAGRAM REF:		
		332111		

MISSING ITEM NUMBERS NOT APPLICABLE

- ITEM NOT ILLUSTRATED

BOEING PROPRIETARY - Copyright © - Unpublished Work - See title page for details.

FIG ITEM	PART NUMBER	1 2 3 4 5 6 7 NOMENCLATURE	EFFECT FROM TO	UNITS PER ASSY
2				
- 840	YHLZ16-8	...MODULE-	002004	1
		SUPPLIER CODE:	006100	
		V09922	107107	
		SPECIFICATION NUMBER:	121503	
		BACM15C3C	904999	
		OPTIONAL PART:		
		421120-454		
		V58982		
		TBH120454		
		V58982		
		ELECTRICAL EQUIP NUMBER:		
		TB0047Z		
		WIRING DIAGRAM REF:		
		332211		
- 850	286N1242-002	..WIRE BUNDLE ASSY	107107	1
			121503	
			904949	
- 860	YHLZD33	...TERMINAL-	002004	1
		SUPPLIER CODE:	006100	
		V09922	107107	
		ELECTRICAL EQUIP NUMBER:	121503	
		TB0047A	904999	
		WIRING DIAGRAM REF:		
		334212		
		OPTIONAL PART:		
		YHLZD29		
		V09922		
- 860	YHLZD29	...TERMINAL-	002004	1
		SUPPLIER CODE:	006100	
		V09922	107107	
		ELECTRICAL EQUIP NUMBER:	121503	
		TB0047A	904999	
		WIRING DIAGRAM REF:		
		334212		
		OPTIONAL PART:		
		YHLZD33		
		V09922		

MISSING ITEM NUMBERS NOT APPLICABLE

- ITEM NOT ILLUSTRATED

BOEING PROPRIETARY - Copyright © - Unpublished Work - See title page for details.

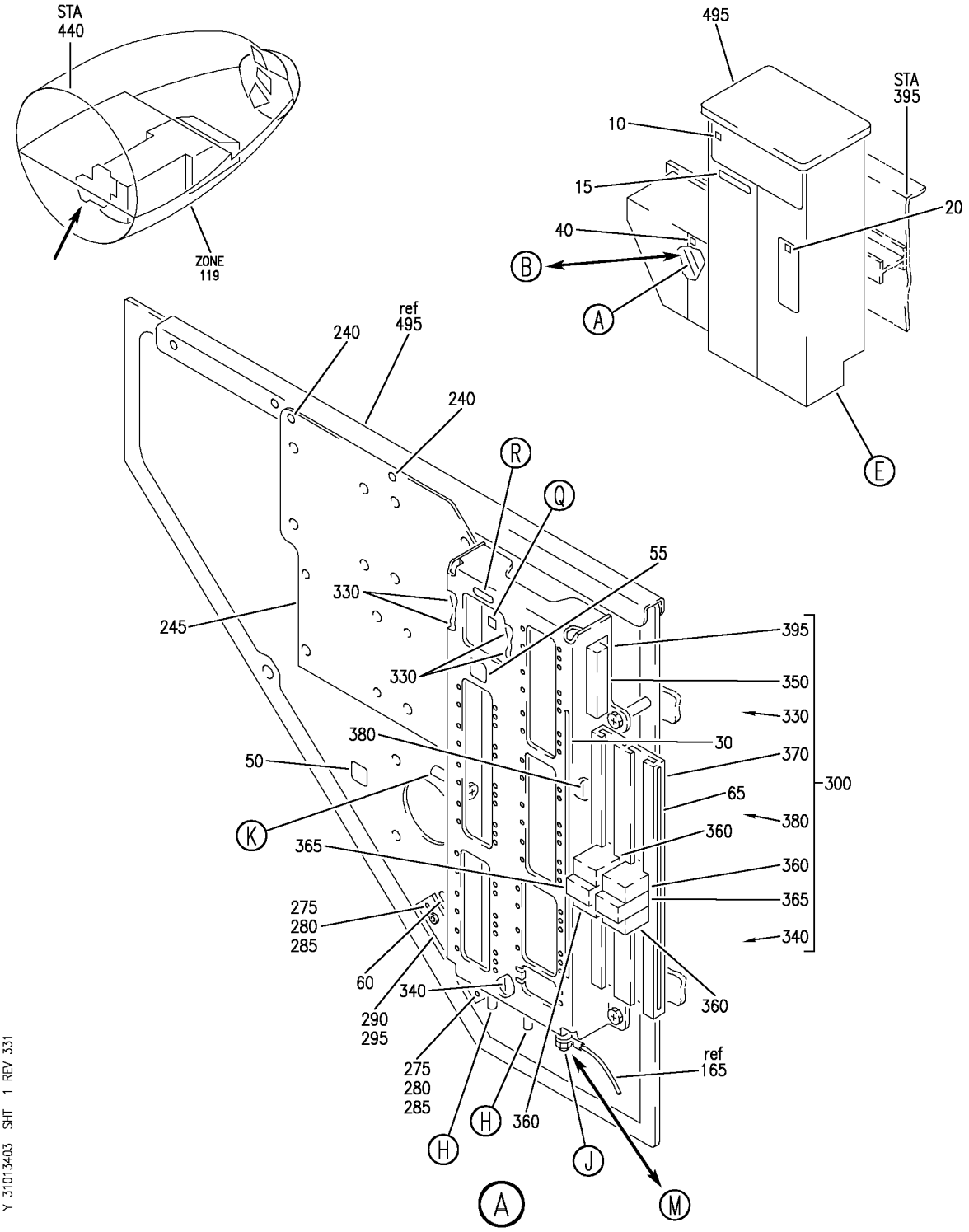

PANEL ASSY-P34 APU/EXT PWR (PANELS ONLY)
FIGURE 3 (SHEET 1)

BOEING PROPRIETARY - Copyright © - Unpublished Work - See title page for details.

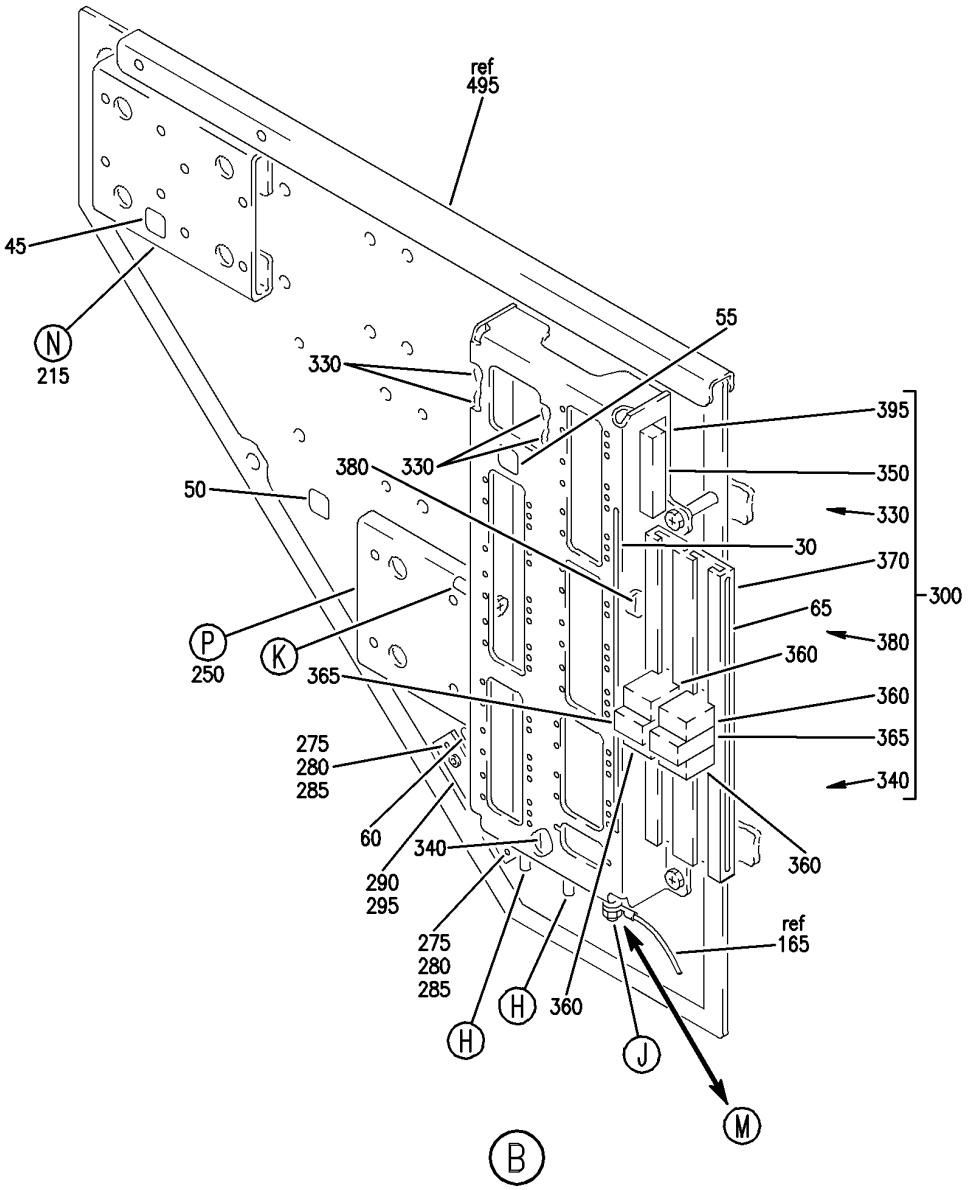

Y 31013403 SHT 2 REV 241

PANEL ASSY-P34 APU/EXT PWR (PANELS ONLY)
FIGURE 3 (SHEET 2)

BOEING PROPRIETARY - Copyright © - Unpublished Work - See title page for details.

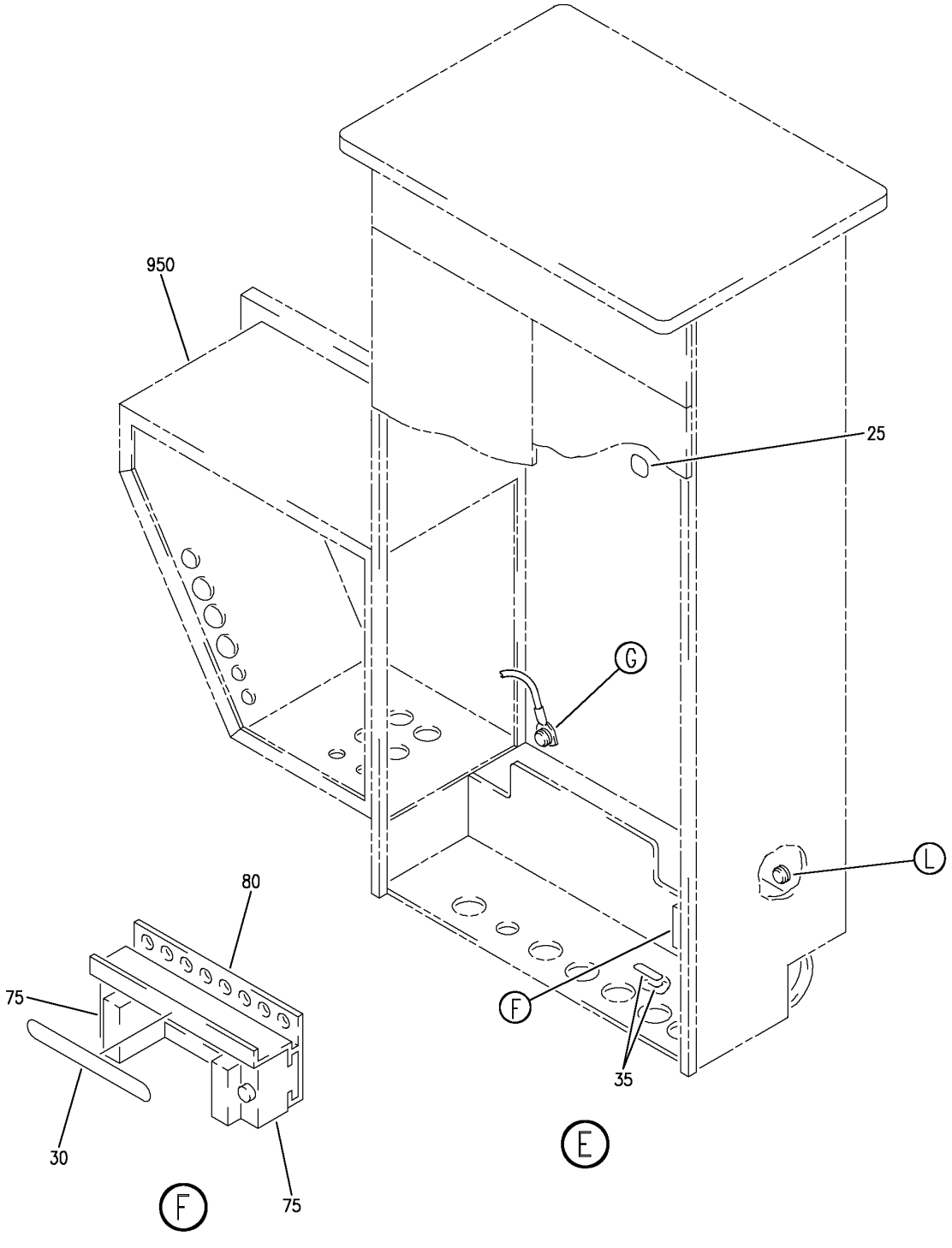

PANEL ASSY-P34 APU/EXT PWR (PANELS ONLY)
FIGURE 3 (SHEET 3)

BOEING PROPRIETARY - Copyright © - Unpublished Work - See title page for details.

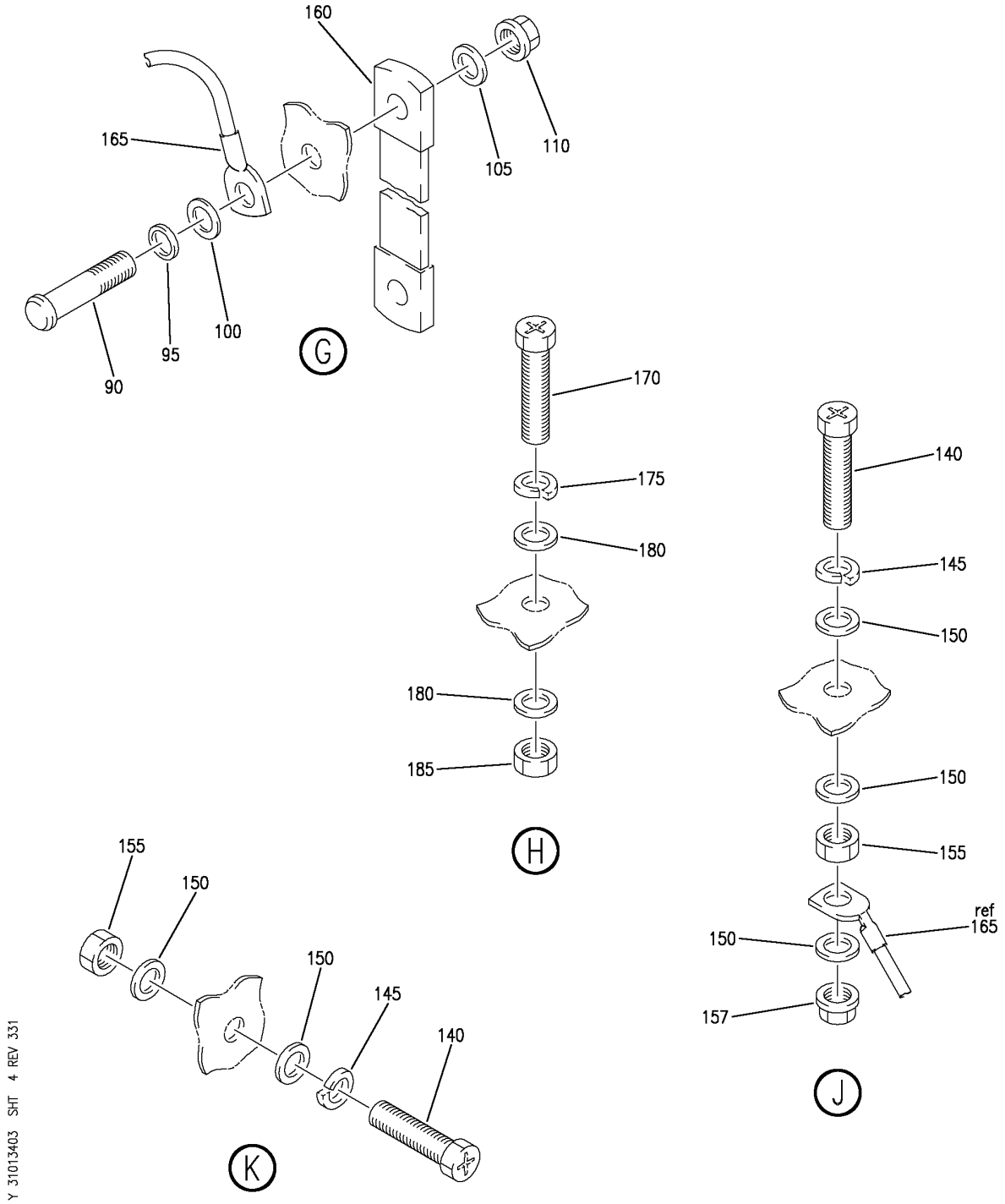

PANEL ASSY-P34 APU/EXT PWR (PANELS ONLY)
FIGURE 3 (SHEET 4)

BOEING PROPRIETARY - Copyright © - Unpublished Work - See title page for details.

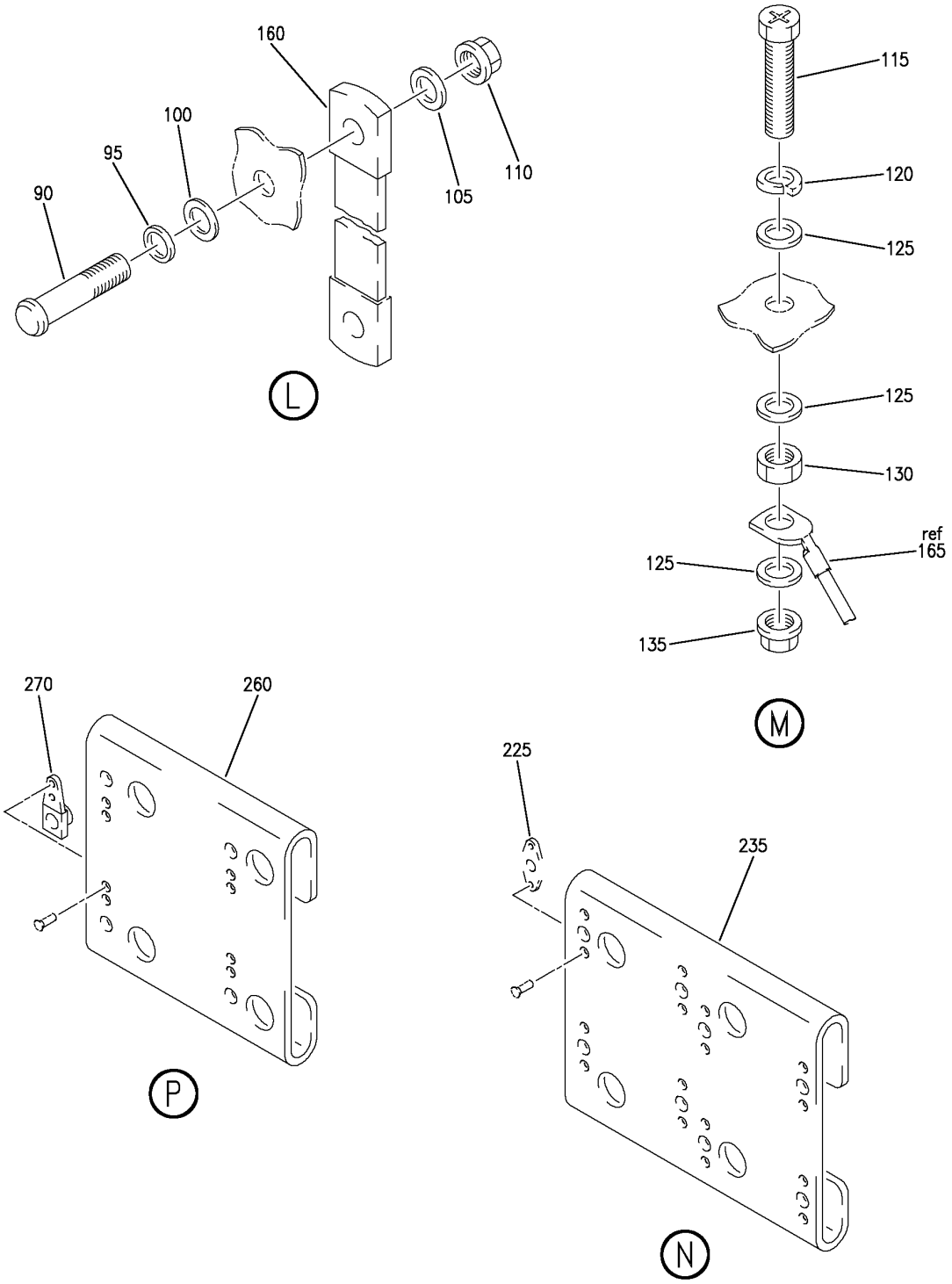

PANEL ASSY-P34 APU/EXT PWR (PANELS ONLY)
FIGURE 3 (SHEET 5)

BOEING PROPRIETARY - Copyright © - Unpublished Work - See title page for details.

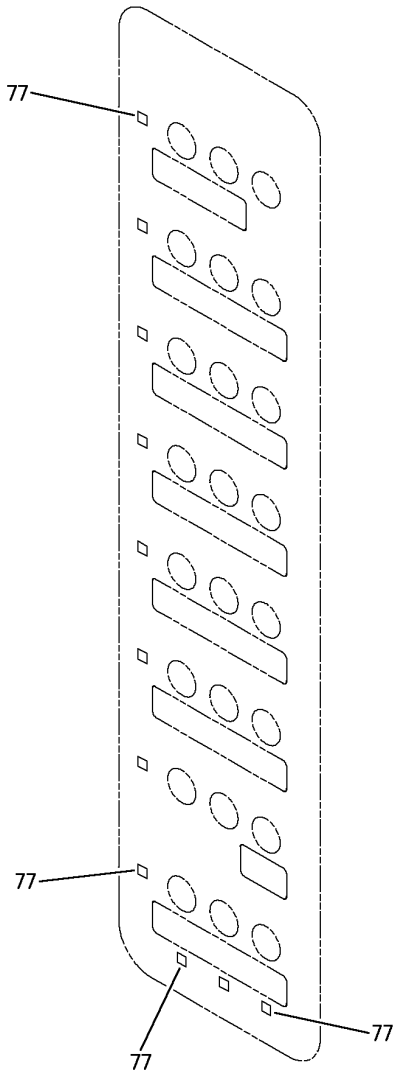

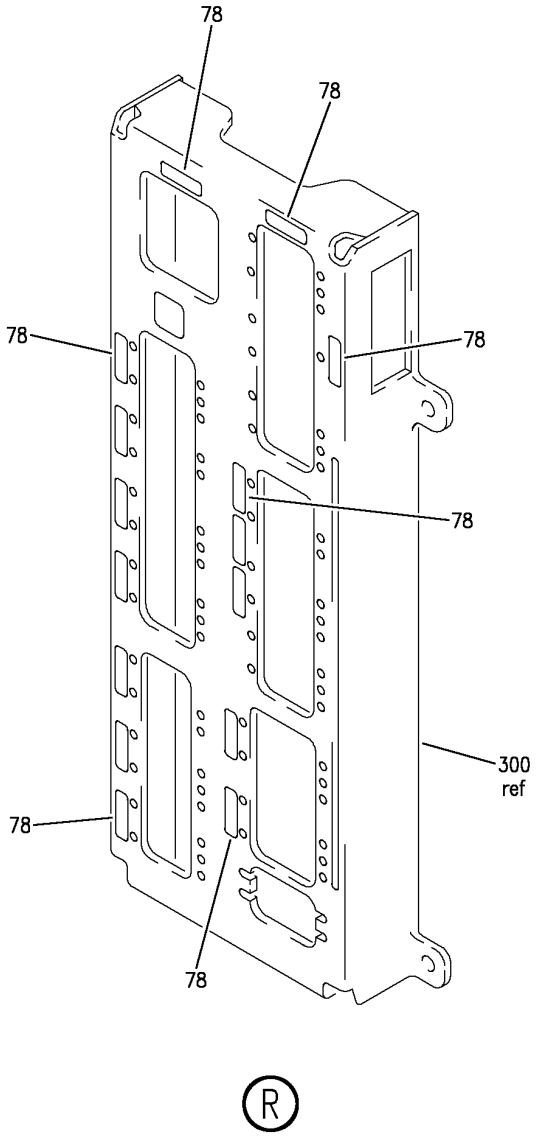

Y 31013403 SHT 6 REV 331

PANEL ASSY-P34 APU/EXT PWR (PANELS ONLY)
FIGURE 3 (SHEET 6)

BOEING PROPRIETARY - Copyright © - Unpublished Work - See title page for details.

FIG ITEM	PART NUMBER	1 2 3 4 5 6 7 NOMENCLATURE	EFFECT FROM TO	UNITS PER ASSY
3				
		PANEL ASSY-P34 APU/EXT PWR	103106	
		(PANELS ONLY)	108120	
- 2	284N1316-147	PANEL ASSY-P34 APU/EXT PWR	108120	RF
		(PANELS ONLY)		
		FOR NHA/OTHER SYS DET SEE:		
		24-00-58-05C		
- 5	MODREF31492	PANEL ASSY-P34 APU/EXT PWR	103105	1
		(PANELS ONLY)		
		MODULE NUMBER:		
		284N1316-207 REV A		
		FOR OTHER SYS DETAILS SEE:		
		11-36-09-08		
		24-22-03-04		
		24-23-01-03		
		24-41-01-02		
		24-51-01-03		
		24-51-03-02		
		24-51-04-03		
		24-51-54-04		
		24-53-73-02		
		24-54-01-02		
		33-21-71-02		
		33-22-71-02		
		33-24-71-02		
		33-42-71-03		
		38-14-71-02		
- 5	MODREF34794	PANEL ASSY-P34 APU/EXT PWR	106106	1
		(PANELS ONLY)		
		MODULE NUMBER:		
		284N1316-207 REV B		
		FOR OTHER SYS DETAILS SEE:		
		11-36-09-08		
		24-22-03-04		
		24-23-01-03		
		24-41-01-02		
		24-51-01-03		
		24-51-03-02		
		24-51-04-03		
		24-51-54-04		
		24-53-73-02		
		24-54-01-02		
		33-21-71-02		
		33-22-71-02		
		33-24-71-02		
		33-42-71-03		
		38-14-71-02		
10	BAC27NEX0173	.DECAL-	103106	1
		PLACARD CONTENT:	108120	
		A		

MISSING ITEM NUMBERS NOT APPLICABLE

- ITEM NOT ILLUSTRATED

BOEING PROPRIETARY - Copyright © - Unpublished Work - See title page for details.

FIG ITEM	PART NUMBER	1 2 3 4 5 6 7 NOMENCLATURE	EFFECT FROM TO	UNITS PER ASSY
3				
15	BAC27TEX0103	.DECAL-	103106	1
		PLACARD CONTENT:	108120	
		P34 APU EXT PWR		
20	BAC27NEX0175	.DECAL-	103106	1
		PLACARD CONTENT:	108120	
		C		
25	BAC27NEX0247	.DECAL-	103106	1
		PLACARD CONTENT:	108120	
		E		
30	BAC27TEX8	.DECAL-	103106	2
		PLACARD CONTENT:	108120	
		1 THRU 25		
		MISCELLANEOUS DATA:		
		TRIM AS REQUIRED		
35	BAC27NEX0594	.DECAL-	103106	2
		PLACARD CONTENT:	108120	
		AP0034		
40	BAC27NEX0174	.DECAL-	103106	1
		PLACARD CONTENT:	108120	
		B		
45	BAC27NEX0249	.DECAL-	108120	1
		PLACARD CONTENT:		
		G		
50	BAC27NEX0176	.DECAL-	103106	1
		PLACARD CONTENT:	108120	
		D		
55	BAC27NEX0248	.DECAL-	103106	1
		PLACARD CONTENT:	108120	
		F		
60	BAC27NEX0773	.DECAL-	103106	1
		PLACARD CONTENT:	108120	
		1 THRU 4		
65	BAC27NEX1635	.DECAL-	103106	1
		PLACARD CONTENT:	108120	
		26 THRU 50		
75	H49-2	.CLAMP	103106	2
		SUPPLIER CODE:	108120	
		V34941		
		SPECIFICATION NUMBER:		
		BACC49A2		
		OPTIONAL PART:		
		MF104-2		
		V6E102		

MISSING ITEM NUMBERS NOT APPLICABLE

– ITEM NOT ILLUSTRATED

BOEING PROPRIETARY - Copyright © - Unpublished Work - See title page for details.

FIG ITEM	PART NUMBER	1 2 3 4 5 6 7 NOMENCLATURE	EFFECT FROM TO	UNITS PER ASSY
3				
77	TTVF2525WE10	.TAPE-ID	103106	AR
		SUPPLIER CODE:	108120	
		V0KW00		
		SPECIFICATION NUMBER:		
		BACT19J3		
		OPTIONAL PART:		
		THT11-437W10		
		V85480		
78	TTVF7525WE10	.TAPE	103106	AR
		SUPPLIER CODE:	108120	
		V0KW00		
		SPECIFICATION NUMBER:		
		BACT19J4		
		OPTIONAL PART:		
		THT1-437W10		
		V85480		
80	AMY0350T3	.TRACK	103106	1
		SUPPLIER CODE:	108120	
		V09922		
		SPECIFICATION NUMBER:		
		BACT44A0350D		
		OPTIONAL PART:		
		BACT44A0350D		
		V3X503		
		ATTACHING PARTS		
- 85	NAS1801-3-8	.SCREW	108120	2
- 85	BACS12HN3-8	.SCREW	103106	2
		-------*-------		

MISSING ITEM NUMBERS NOT APPLICABLE

- ITEM NOT ILLUSTRATED

BOEING PROPRIETARY - Copyright © - Unpublished Work - See title page for details.

FIG ITEM	PART NUMBER	1 2 3 4 5 6 7 NOMENCLATURE	EFFECT FROM TO	UNITS PER ASSY
3				
90	HL448UC12-5	.BOLT	103106	2
		SUPPLIER CODE:	108120	
		V9N513		
		SPECIFICATION NUMBER:		
		BACB30MB12A5		
		OPTIONAL PART:		
		HL448UC12-5		
		V73197		
		HL448UC12-5		
		V92215		
		69308-12-5		
		V56878		
		HL448UC12-5		
		V80539		
		HL448UC12-5		
		V08524		
		HL448UC12-5		
		V97928		
		WC44812-5		
		V60516		
		HL448UC12-5		
		V56878		
95	BACW10EG12C	.WASHER-	103106	2
		POSITION DATA:	108120	
		COUNTERSINK TOWARD BOLT		
		HEAD		
100	NAS1149D0616J	.WASHER	103106	2
			108120	
105	NAS1149D0663J	.WASHER	103106	2
			108120	
110	PLH506CD	.NUT	103106	2
		SUPPLIER CODE:	108120	
		VF0224		
		SPECIFICATION NUMBER:		
		BACN10YR06CD		
		OPTIONAL PART:		
		H52732-06CD		
		V15653		
115	NAS1801-4-12	.SCREW	108120	1
120	MS35338-44	.WASHER	108120	1
125	NAS1149D0416J	.WASHER	108120	3
130	MS35650-3255T	.NUT	108120	1

MISSING ITEM NUMBERS NOT APPLICABLE

– ITEM NOT ILLUSTRATED

BOEING PROPRIETARY - Copyright © - Unpublished Work - See title page for details.

FIG ITEM	PART NUMBER	1 2 3 4 5 6 7 NOMENCLATURE	EFFECT FROM TO	UNITS PER ASSY
3				
135	PLH504CD	.NUT	108120	1
		SUPPLIER CODE:		
		VF0224		
		SPECIFICATION NUMBER:		
		BACN10YR04CD		
		OPTIONAL PART:		
		H52732-04CD		
		V15653		
140	BACS12HN4-12	.SCREW	103106	2
145	BACW10EC4S	.WASHER	103106	2
150	NAS1149D0416J	.WASHER	103106	5
155	MS35650-3255T	.NUT	103106	2
157	PLH504CD	.NUT	103106	1
		SUPPLIER CODE:		
		VF0224		
		SPECIFICATION NUMBER:		
		BACN10YR04CD		
		OPTIONAL PART:		
		H52732-04CD		
		V15653		
160	RBEJ40E22-48	.JUMPER ASSY	103106	2
		SUPPLIER CODE:	108120	
		V1GK47		
		SPECIFICATION NUMBER:		
		BACJ40E22-48		
		OPTIONAL PART:		
		740E22-48		
		V91812		
165	BACJ40A31-7	.JUMPER	103106	1
			108120	
170	NAS1801-3-12	.SCREW	108120	2
170	BACS12HN3-12	.SCREW	103106	2
175	MS35338-43	.WASHER	108120	2
175	BACW10EC3S	.WASHER	103106	2
180	NAS1149D0316J	.WASHER	103106	4
			108120	
185	MS35650-305T	.NUT	103106	2
			108120	
215	284N1373-140	.PANEL ASSY	108120	1
		ATTACHING PARTS		
- 220	NAS1801-3-8	.SCREW	108120	4
		-------*-------		

MISSING ITEM NUMBERS NOT APPLICABLE

- ITEM NOT ILLUSTRATED

BOEING PROPRIETARY - Copyright © - Unpublished Work - See title page for details.

FIG ITEM	PART NUMBER	1 2 3 4 5 6 7 NOMENCLATURE	EFFECT FROM TO	UNITS PER ASSY
3				
225	BRF200A08	..NUTPLATE	108120	8
		SUPPLIER CODE:		
		V52828		
		SPECIFICATION NUMBER:		
		BACN10JR08F		
		OPTIONAL PART:		
		NS103203-82		
		V80539		
		RMF9201-82		
		V72962		
		VN152A1-82		
		V92215		
		T8091S832		
		V11815		
		F5000-08BAC		
		V15653		
		ATTACHING PARTS		
- 230	NAS1399CW3A	..RIVET-	108120	16
		SIZE DETERMINED ON INSTL.		
		-------*-------		
235	284N1373-139	..PANEL	108120	1
250	284N1373-157	.PANEL ASSY	108120	1
		ATTACHING PARTS		
- 255	NAS1801-3-8	.SCREW	108120	4
		-------*-------		
260	F177-3	..NUTPLATE	108120	4
		SUPPLIER CODE:		
		V72962		
		SPECIFICATION NUMBER:		
		BACN10JA3		
		OPTIONAL PART:		
		F2400-3		
		V15653		
		43610-02		
		V80539		
		BRF110A3		
		V52828		
		BRF170A3		
		V52828		
		ATTACHING PARTS		
- 265	BACR15BA3ADC	..RIVET-	108120	8
		SIZE DETERMINED ON INSTL.		
		-------*-------		
270	284N1373-156	..PANEL	108120	1
275	NAS1801-04-8	.SCREW	108120	2
275	BACS12HN04-8	.SCREW	103106	2
280	NAS1149DN432J	.WASHER	103106	2
			108120	

MISSING ITEM NUMBERS NOT APPLICABLE

- ITEM NOT ILLUSTRATED

BOEING PROPRIETARY - Copyright © - Unpublished Work - See title page for details.

FIG ITEM	PART NUMBER	1 2 3 4 5 6 7 NOMENCLATURE	EFFECT FROM TO	UNITS PER ASSY
3				
285	PLH504CD	.NUT	103106	2
		SUPPLIER CODE:	108120	
		VF0224		
		SPECIFICATION NUMBER:		
		BACN10YR04CD		
		OPTIONAL PART:		
		H52732-04CD		
		V15653		
290	MS18029-2L4	.COVER ASSY	103106	1
			108120	
295	MS27212-2-4	.TERMINAL BOARD ASSY-	103106	1
		ELECTRICAL EQUIP NUMBER:	108120	
		TB5034		
300	284N1373-155	.PLATE ASSY	103106	1
			108120	
		ATTACHING PARTS		
- 310	NAS1801-3-24	.SCREW	108120	4
- 310	BACS12HN3-24	.SCREW	103106	4
- 315	NAS1149D0316J	.WASHER	103106	4
			108120	
- 320	AN970-3	.WASHER	103106	4
			108120	
- 325	NAS43DD3-64FC	.SPACER	103106	4
			108120	
		-------*-------		
330	MF53049-08	..NUT	103106	4
		SUPPLIER CODE:	108120	
		V15653		
		SPECIFICATION NUMBER:		
		BACN10JN08		
		OPTIONAL PART:		
		BRFM20A08		
		V52828		
		MF1000-08BAC		
		V15653		
		NS103218-82		
		V80539		
		RMF9201M82		
		V72962		
		VN252A82		
		V92215		
		T8124S08S		
		V11815		
		ATTACHING PARTS		
- 335	BACR15BA3AD	..RIVET-	103106	8
		SIZE DETERMINED ON INSTL.	108120	
		-------*-------		

MISSING ITEM NUMBERS NOT APPLICABLE

- ITEM NOT ILLUSTRATED

BOEING PROPRIETARY - Copyright © - Unpublished Work - See title page for details.

FIG ITEM	PART NUMBER	1 2 3 4 5 6 7 NOMENCLATURE	EFFECT FROM TO	UNITS PER ASSY
3				
340	WS14A10	..NUTPLATE	103106	1
		SUPPLIER CODE:	108120	
		V04169		
		SPECIFICATION NUMBER:		
		BACN10TL3A10		
		ATTACHING PARTS		
- 345	BACR15FT4D	..RIVET-	103106	2
		SIZE DETERMINED ON INSTL.	108120	
		-------*-------		
350	YHLZG16-2	..BLOCK-GND	103106	1
		SUPPLIER CODE:	108120	
		V09922		
		ATTACHING PARTS		
- 355	BACR15BB4AD	..RIVET-	103106	4
		SIZE DETERMINED ON INSTL.	108120	
		-------*-------		
360	BACC49A1	..CLAMP	103106	4
			108120	
365	H21-1	..SPACER	103106	2
		SUPPLIER CODE:	108120	
		V34941		
		SPECIFICATION NUMBER:		
		BACS18AR1		
		OPTIONAL PART:		
		FAB276A		
		V15805		
		YHLZ1C2		
		V09922		
370	BACT44D0900U	..TRACK	103106	1
			108120	
		ATTACHING PARTS		
- 375	BACR15BB4D	..RIVET-	103106	8
		SIZE DETERMINED ON INSTL.	108120	
		-------*-------		
380	BACN10GH3A6	..NUTPLATE	103106	1
			108120	
		ATTACHING PARTS		
- 390	BACR15BA4AD	..RIVET-	103106	3
		SIZE DETERMINED ON INSTL.	108120	
		-------*-------		
395	284N1373-154	..PLATE-MTG	103106	1
			108120	
495	13441000-6	.ENCLOSURE ASSY-	103106	1
		SUPPLIER CODE:	108120	
		V23296		
- 500	286N1128-318	WIRE BUNDLE ASSY	108120	RF
- 501	286N1128-701	WIRE BUNDLE ASSY	103106	RF

MISSING ITEM NUMBERS NOT APPLICABLE

- ITEM NOT ILLUSTRATED

BOEING PROPRIETARY - Copyright © - Unpublished Work - See title page for details.

FIG ITEM	PART NUMBER	1 2 3 4 5 6 7 NOMENCLATURE	EFFECT FROM TO	UNITS PER ASSY
3				
- 510	YHLZD33	.TERMINAL-	103106	1
		SUPPLIER CODE:	108120	
		V09922		
		ELECTRICAL EQUIP NUMBER:		
		TB0134A		
		WIRING DIAGRAM REF:		
		242241		
- 515	YHLZR17	.COMPONENT-RESISTOR	103106	1
		SUPPLIER CODE:	108120	
		V09922		
		ELECTRICAL EQUIP NUMBER:		
		TB0134B		
		WIRING DIAGRAM REF:		
		244111		
- 520	YHLZ16-4	.MODULE-	103106	1
		SUPPLIER CODE:	108120	
		V09922		
		SPECIFICATION NUMBER:		
		BACM15C3B		
		OPTIONAL PART:		
		421120-452		
		V58982		
		TBH120452		
		V58982		
		ELECTRICAL EQUIP NUMBER:		
		TB0134Y		
		WIRING DIAGRAM REF:		
		242212		
- 601	286N1240-323	WIRE BUNDLE ASSY	108120	RF
- 602	286N1240-602	WIRE BUNDLE ASSY	103106	RF
- 610	YHLZD29	.TERMINAL-	103106	1
		SUPPLIER CODE:	108120	
		V09922		
		ELECTRICAL EQUIP NUMBER:		
		TB0047A		
		WIRING DIAGRAM REF:		
		334212		

MISSING ITEM NUMBERS NOT APPLICABLE

- ITEM NOT ILLUSTRATED

BOEING PROPRIETARY - Copyright © - Unpublished Work - See title page for details.

FIG ITEM	PART NUMBER	1 2 3 4 5 6 7 NOMENCLATURE	EFFECT FROM TO	UNITS PER ASSY
3				
- 615	YHLZ2	.MODULE-	103106	4
		SUPPLIER CODE:	108120	
		V09922		
		SPECIFICATION NUMBER:		
		BACM15C1A		
		OPTIONAL PART:		
		YHLZ22		
		V09922		
		ELECTRICAL EQUIP NUMBER:		
		TB0047F		
		WIRING DIAGRAM REF:		
		332111		
		332411		
- 620	YHLZ4	.MODULE-	103106	1
		SUPPLIER CODE:	108120	
		V09922		
		SPECIFICATION NUMBER:		
		BACM15C1B		
		OPTIONAL PART:		
		YHLZ44		
		V09922		
		ELECTRICAL EQUIP NUMBER:		
		TB0047G		
		WIRING DIAGRAM REF:		
		332131		
- 630	YHLZ16-2	.MODULE-	103106	1
		SUPPLIER CODE:	108120	
		V09922		
		SPECIFICATION NUMBER:		
		BACM15C3A		
		OPTIONAL PART:		
		TBH120450		
		V58982		
		421120-450		
		V58982		
		ELECTRICAL EQUIP NUMBER:		
		TB0047X		
		WIRING DIAGRAM REF:		
		245151		
		332131		

MISSING ITEM NUMBERS NOT APPLICABLE

- ITEM NOT ILLUSTRATED

BOEING PROPRIETARY - Copyright © - Unpublished Work - See title page for details.

FIG ITEM	PART NUMBER	1 2 3 4 5 6 7 NOMENCLATURE	EFFECT FROM TO	UNITS PER ASSY
3				
- 637	YHLZ16-4	.MODULE- SUPPLIER CODE: V09922 SPECIFICATION NUMBER: BACM15C3B OPTIONAL PART: 421120-452 V58982 TBH120452 V58982 ELECTRICAL EQUIP NUMBER: TB0047Y WIRING DIAGRAM REF: 332111	108120	5
- 638	YHLZ16-4	.MODULE- SUPPLIER CODE: V09922 SPECIFICATION NUMBER: BACM15C3B OPTIONAL PART: 421120-452 V58982 TBH120452 V58982 ELECTRICAL EQUIP NUMBER: TB0047Y WIRING DIAGRAM REF: 332111	103106	9
- 643	YHLZ16-8	.MODULE- SUPPLIER CODE: V09922 SPECIFICATION NUMBER: BACM15C3C OPTIONAL PART: 421120-454 V58982 TBH120454 V58982 ELECTRICAL EQUIP NUMBER: TB0047Z WIRING DIAGRAM REF: 332211	108120	5

MISSING ITEM NUMBERS NOT APPLICABLE

- ITEM NOT ILLUSTRATED

BOEING PROPRIETARY - Copyright © - Unpublished Work - See title page for details.

FIG ITEM	PART NUMBER	1 2 3 4 5 6 7 NOMENCLATURE	EFFECT FROM TO	UNITS PER ASSY
3				
- 645	YHLZ16-8	.MODULE-	103106	2
		SUPPLIER CODE:		
		V09922		
		SPECIFICATION NUMBER:		
		BACM15C3C		
		OPTIONAL PART:		
		421120-454		
		V58982		
		TBH120454		
		V58982		
		ELECTRICAL EQUIP NUMBER:		
		TB0047Z		
		WIRING DIAGRAM REF:		
		332211		
950		ILLUSTRATION REFERENCE:		
		WIRE BUNDLE ASSY-P34	103106	RF
		31-01-34-03A	108120	

MISSING ITEM NUMBERS NOT APPLICABLE

- ITEM NOT ILLUSTRATED

BOEING PROPRIETARY - Copyright © - Unpublished Work - See title page for details.

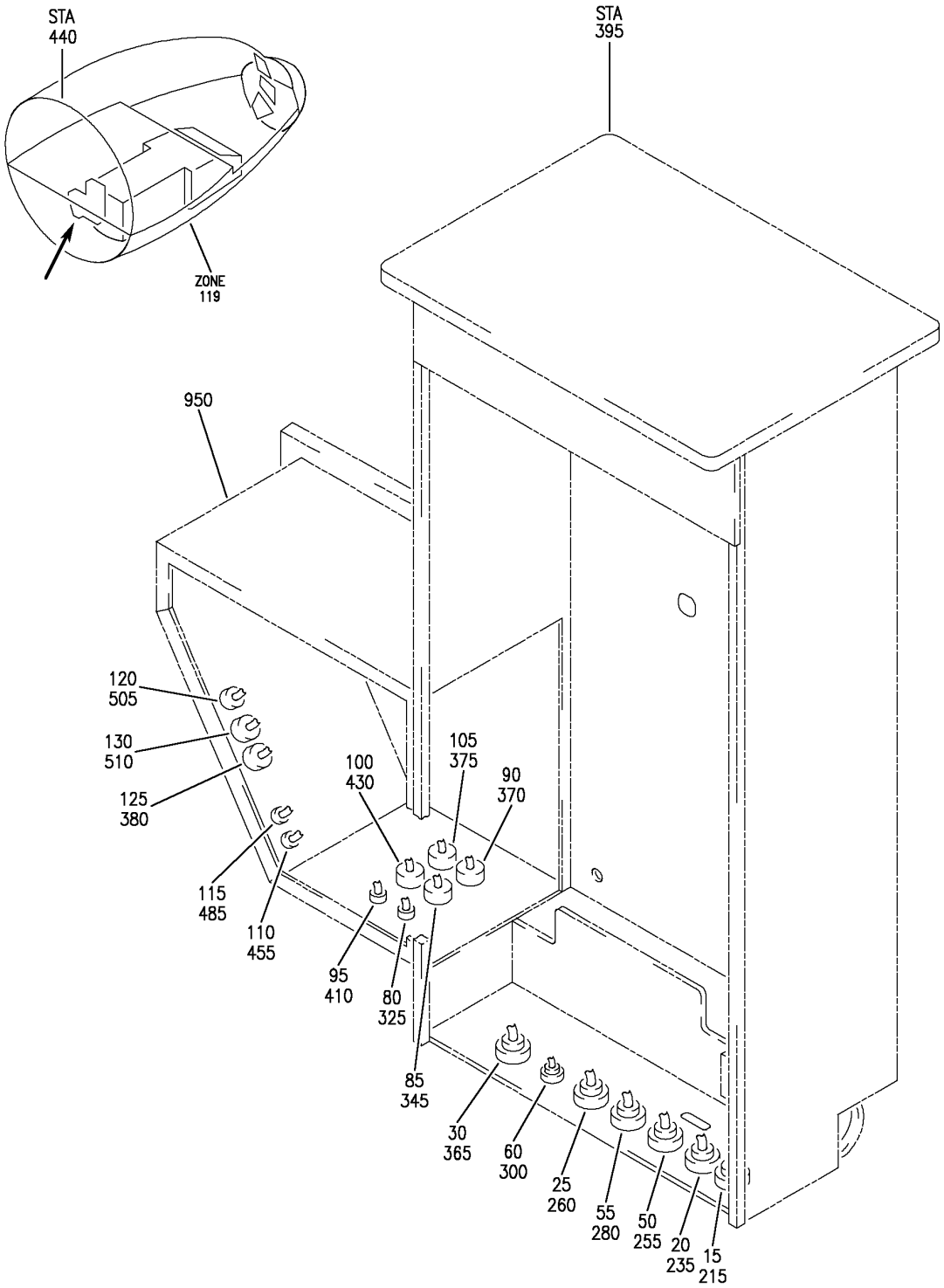

WIRE BUNDLE ASSY-P34
FIGURE 3A

BOEING PROPRIETARY - Copyright © - Unpublished Work - See title page for details.

FIG ITEM	PART NUMBER	1 2 3 4 5 6 7 NOMENCLATURE	EFFECT FROM TO	UNITS PER ASSY
3A				
		WIRE BUNDLE ASSY-P34	103106 108120	
- 5	286N1190-321	WIRE BUNDLE ASSY	108120	1
- 7	286N1190-701	WIRE BUNDLE ASSY	103106	1
15	BACC45FN18-14S	.RECEPTACLE- ELECTRICAL EQUIP NUMBER: D40188J WIRING DIAGRAM REF: 245161 333721	108120	1
15	BACC45FN20-25S	.RECEPTACLE- ELECTRICAL EQUIP NUMBER: D40188J WIRING DIAGRAM REF: 245161 333721	103106	1
20	BACC45FN18-14S9	.RECEPTACLE- ELECTRICAL EQUIP NUMBER: D40080J WIRING DIAGRAM REF: 523411	108120	1
20	BACC45FN20-25S9	.CONNECTOR- ELECTRICAL EQUIP NUMBER: D40080J WIRING DIAGRAM REF: 523411	103106	1
25	BACC45FN22-32S6	.RECEPTACLE- ELECTRICAL EQUIP NUMBER: D41326J WIRING DIAGRAM REF: 242141	108120	1
30	BACC45FN20-25S9	.CONNECTOR- ELECTRICAL EQUIP NUMBER: D42976J WIRING DIAGRAM REF: 242141 245461	103106	1
- 40	286N1128-318	WIRE BUNDLE ASSY	108120	1
- 41	286N1128-701	WIRE BUNDLE ASSY	103106	1
50	BACC45FN22-55S8	.CONNECTOR- ELECTRICAL EQUIP NUMBER: D40400J WIRING DIAGRAM REF: 242312 244111	103106 108120	1

MISSING ITEM NUMBERS NOT APPLICABLE

- ITEM NOT ILLUSTRATED

BOEING PROPRIETARY - Copyright © - Unpublished Work - See title page for details.

FIG ITEM	PART NUMBER	1 2 3 4 5 6 7 NOMENCLATURE	EFFECT FROM TO	UNITS PER ASSY
3A				
55	BACC45FN18-31S7	.CONNECTOR-	103106	1
		ELECTRICAL EQUIP NUMBER:	108120	
		D40956J		
		WIRING DIAGRAM REF:		
		242711		
60	BACC45FN14-15P	.CONNECTOR-	103106	1
		ELECTRICAL EQUIP NUMBER:	108120	
		D40378J		
		WIRING DIAGRAM REF:		
		244111		
- 70	286N1240-323	WIRE BUNDLE ASSY	108120	1
- 71	286N1240-602	WIRE BUNDLE ASSY	103106	1
80	BACC45FN14-15S9	.RECEPTACLE-	108120	1
		ELECTRICAL EQUIP NUMBER:		
		D40474J		
		WIRING DIAGRAM REF:		
		332131		
80	BACC45FN14-12S9	.CONNECTOR-	103106	1
		ELECTRICAL EQUIP NUMBER:		
		D40474J		
		WIRING DIAGRAM REF:		
		332131		
85	BACC45FN22-55P6	.CONNECTOR-	103106	1
		ELECTRICAL EQUIP NUMBER:	108120	
		D41470J		
		WIRING DIAGRAM REF:		
		332111		
		332411		
90	BACC45FN22-19P8	.CONNECTOR-	103106	1
		ELECTRICAL EQUIP NUMBER:	108120	
		D41476J		
		WIRING DIAGRAM REF:		
		332111		
95	BACC45FN14-12S8	.RECEPTACLE-	103106	1
		ELECTRICAL EQUIP NUMBER:	108120	
		D40376J		
		WIRING DIAGRAM REF:		
		332111		
		332151		
100	BACC45FN20-39S	.RECEPTACLE-	103106	1
		ELECTRICAL EQUIP NUMBER:	108120	
		D41848J		
		WIRING DIAGRAM REF:		
		233113		
105	BACC45FN22-55P7	.CONNECTOR-	103106	1
		ELECTRICAL EQUIP NUMBER:	108120	
		D41472J		
		WIRING DIAGRAM REF:		
		332131		

MISSING ITEM NUMBERS NOT APPLICABLE

- ITEM NOT ILLUSTRATED

BOEING PROPRIETARY - Copyright © - Unpublished Work - See title page for details.

FIG ITEM	PART NUMBER	1 2 3 4 5 6 7 NOMENCLATURE	EFFECT FROM TO	UNITS PER ASSY
3A				
110	BACC45FN14-15S7	.CONNECTOR-	108120	1
		ELECTRICAL EQUIP NUMBER:		
		D40374J		
		WIRING DIAGRAM REF:		
		332131		
110	BACC45FN14-12S7	.RECEPTACLE-	103106	1
		ELECTRICAL EQUIP NUMBER:		
		D40374J		
		WIRING DIAGRAM REF:		
		332131		
115	BACC45FN14-12S6	.RECEPTACLE-	103106	1
		ELECTRICAL EQUIP NUMBER:	108120	
		D40476J		
		WIRING DIAGRAM REF:		
		332111		
		332151		
120	BACC45FN18-31P	.CONNECTOR-	108120	1
		ELECTRICAL EQUIP NUMBER:		
		D41474J		
		WIRING DIAGRAM REF:		
		332211		
125	BACC45FN20-25P	.CONNECTOR-	103106	1
		ELECTRICAL EQUIP NUMBER:		
		D42978J		
		WIRING DIAGRAM REF:		
		245461		
130	BACC45FN22-55P	.CONNECTOR-	103106	1
		ELECTRICAL EQUIP NUMBER:		
		D41474J		
		WIRING DIAGRAM REF:		
		332211		
- 206	286N2602-326	WIRE BUNDLE ASSY	108120	1
- 214	286N6610-701	WIRE BUNDLE ASSY	103106	1
215	BACC45FT18-14P	.PLUG-	108120	1
		ELECTRICAL EQUIP NUMBER:		
		D40188P		
		WIRING DIAGRAM REF:		
		523511		
215	BACC45FT20-25P	.CONNECTOR-	103106	1
		ELECTRICAL EQUIP NUMBER:		
		D40188P		
		WIRING DIAGRAM REF:		
		523511		
- 226	286N4104-340	WIRE BUNDLE ASSY	108120	1
- 234	286N6634-701	WIRE BUNDLE ASSY	103106	1

MISSING ITEM NUMBERS NOT APPLICABLE

- ITEM NOT ILLUSTRATED

BOEING PROPRIETARY - Copyright © - Unpublished Work - See title page for details.

FIG ITEM	PART NUMBER	1 2 3 4 5 6 7 NOMENCLATURE	EFFECT FROM TO	UNITS PER ASSY
3A				
235	BACC45FT18-14P9	.PLUG-	108120	1
		ELECTRICAL EQUIP NUMBER:		
		D40080P		
		WIRING DIAGRAM REF:		
		333711		
235	BACC45FT20-25P9	.PLUG-	103106	1
		ELECTRICAL EQUIP NUMBER:		
		D40080P		
		WIRING DIAGRAM REF:		
		333711		
- 245	286N4504-302	WIRE BUNDLE ASSY	108120	RF
- 247	286N4504-701	WIRE BUNDLE ASSY	103106	1
255	BACC45FT22-55P8	.CONNECTOR-	103106	1
		ELECTRICAL EQUIP NUMBER:	108120	
		D40400P		
		WIRING DIAGRAM REF:		
		242241		
260	BACC45FT22A32P6	.PLUG-	108120	1
		ELECTRICAL EQUIP NUMBER:		
		D41326P		
		WIRING DIAGRAM REF:		
		242141		
		242221		
- 270	286N4502-321	WIRE BUNDLE ASSY	108120	RF
- 272	286N4502-701	WIRE BUNDLE ASSY	103106	1
280	BACC45FT18-31P7	.PLUG-	103106	1
		ELECTRICAL EQUIP NUMBER:	108120	
		D40956P		
		WIRING DIAGRAM REF:		
		242222		
- 290	286N2038-301	WIRE BUNDLE ASSY	108120	1
- 290	286N2038-701	WIRE BUNDLE ASSY	103106	1
300	BACC45FT14-15S	.CONNECTOR-	103106	1
		ELECTRICAL EQUIP NUMBER:	108120	
		D40378P		
		WIRING DIAGRAM REF:		
		244112		
- 315	286N3824-304	WIRE BUNDLE ASSY	108120	1
- 324	286N6280-701	WIRE BUNDLE ASSY	103106	1
325	BACC45FT14-15P9	.PLUG-	108120	1
		ELECTRICAL EQUIP NUMBER:		
		D40474P		
		WIRING DIAGRAM REF:		
		332141		
325	BACC45FT14-12P9	.CONNECTOR-	103106	1
		ELECTRICAL EQUIP NUMBER:		
		D40474P		
		WIRING DIAGRAM REF:		
		332141		

MISSING ITEM NUMBERS NOT APPLICABLE

- ITEM NOT ILLUSTRATED

BOEING PROPRIETARY - Copyright © - Unpublished Work - See title page for details.

FIG ITEM	PART NUMBER	1 2 3 4 5 6 7 NOMENCLATURE	EFFECT FROM TO	UNITS PER ASSY
3A				
- 336	286N2070-337	WIRE BUNDLE ASSY	108120	RF
- 339	286N2070-601	WIRE BUNDLE ASSY	103106	1
345	BACC45FT22-55S6	.CONNECTOR-	103106	1
		ELECTRICAL EQUIP NUMBER:	108120	
		D41470P		
		WIRING DIAGRAM REF:		
		334211		
- 361	286N2356-340	WIRE BUNDLE ASSY	108120	1
- 362	286N2356-602	WIRE BUNDLE ASSY	103106	1
365	BACC45FT20-25P9	.PLUG-	103106	1
		ELECTRICAL EQUIP NUMBER:		
		D42976P		
		WIRING DIAGRAM REF:		
		245461		
370	BACC45FT22-19S8	.PLUG-	103106	1
		ELECTRICAL EQUIP NUMBER:	108120	
		D41476P		
		WIRING DIAGRAM REF:		
		332111		
375	BACC45FT22-55S7	.RECEPTACLE-	103106	1
		ELECTRICAL EQUIP NUMBER:	108120	
		D41472P		
		WIRING DIAGRAM REF:		
		282111		
		334212		
		381411		
380	BACC45FT20-25S	.CONNECTOR-	103106	1
		ELECTRICAL EQUIP NUMBER:		
		D42978P		
		WIRING DIAGRAM REF:		
		245461		
- 395	286N3714-303	WIRE BUNDLE ASSY	108120	1
- 405	286N6330-701	WIRE BUNDLE ASSY	103106	1
410	BACC45FT14-12P8	.PLUG-	103106	1
		ELECTRICAL EQUIP NUMBER:	108120	
		D40376P		
		WIRING DIAGRAM REF:		
		332111		
		332112		
- 421	286N2072-355	WIRE BUNDLE ASSY	108120	1
- 421	286N2072-701	WIRE BUNDLE ASSY	103106	1
430	BACC45FT20A39P	.CONNECTOR-	103106	1
		ELECTRICAL EQUIP NUMBER:	108120	
		D41848P		
		WIRING DIAGRAM REF:		
		332411		
		334211		
		334221		
- 445	286N3724-304	WIRE BUNDLE ASSY	108120	1

MISSING ITEM NUMBERS NOT APPLICABLE

- ITEM NOT ILLUSTRATED

BOEING PROPRIETARY - Copyright © - Unpublished Work - See title page for details.

FIG ITEM	PART NUMBER	1 2 3 4 5 6 7 NOMENCLATURE	EFFECT FROM TO	UNITS PER ASSY
3A				
- 453	286N6180-601	WIRE BUNDLE ASSY	103106	RF
455	BACC45FT14-15P7	.PLUG-	108120	1
		ELECTRICAL EQUIP NUMBER:		
		D40374P		
		WIRING DIAGRAM REF:		
		332132		
455	BACC45FT14-12P7	.PLUG-	103106	1
		ELECTRICAL EQUIP NUMBER:		
		D40374P		
		WIRING DIAGRAM REF:		
		332132		
- 470	286N3814-303	WIRE BUNDLE ASSY	108120	1
- 482	286N6430-701	WIRE BUNDLE ASSY	103106	1
485	BACC45FT14-12P6	.PLUG-	103106	1
		ELECTRICAL EQUIP NUMBER:	108120	
		D40476P		
		WIRING DIAGRAM REF:		
		332111		
		332121		
- 496	286N3576-365	WIRE BUNDLE ASSY	108120	RF
- 504	286N6572-601	WIRE BUNDLE ASSY	103106	1
505	BACC45FT18-31S	.CONNECTOR-	108120	1
		ELECTRICAL EQUIP NUMBER:		
		D41474P		
		WIRING DIAGRAM REF:		
		332211		
510	BACC45FT22-55S	.RECEPTACLE-	103106	1
		ELECTRICAL EQUIP NUMBER:		
		D41474P		
		WIRING DIAGRAM REF:		
		332211		
950		ILLUSTRATION REFERENCE:		
		PANEL ASSY-P34 APU/EXT PWR	103106	RF
		(PANELS ONLY)	108120	
		31-01-34-03		

MISSING ITEM NUMBERS NOT APPLICABLE

- ITEM NOT ILLUSTRATED

BOEING PROPRIETARY - Copyright © - Unpublished Work - See title page for details.

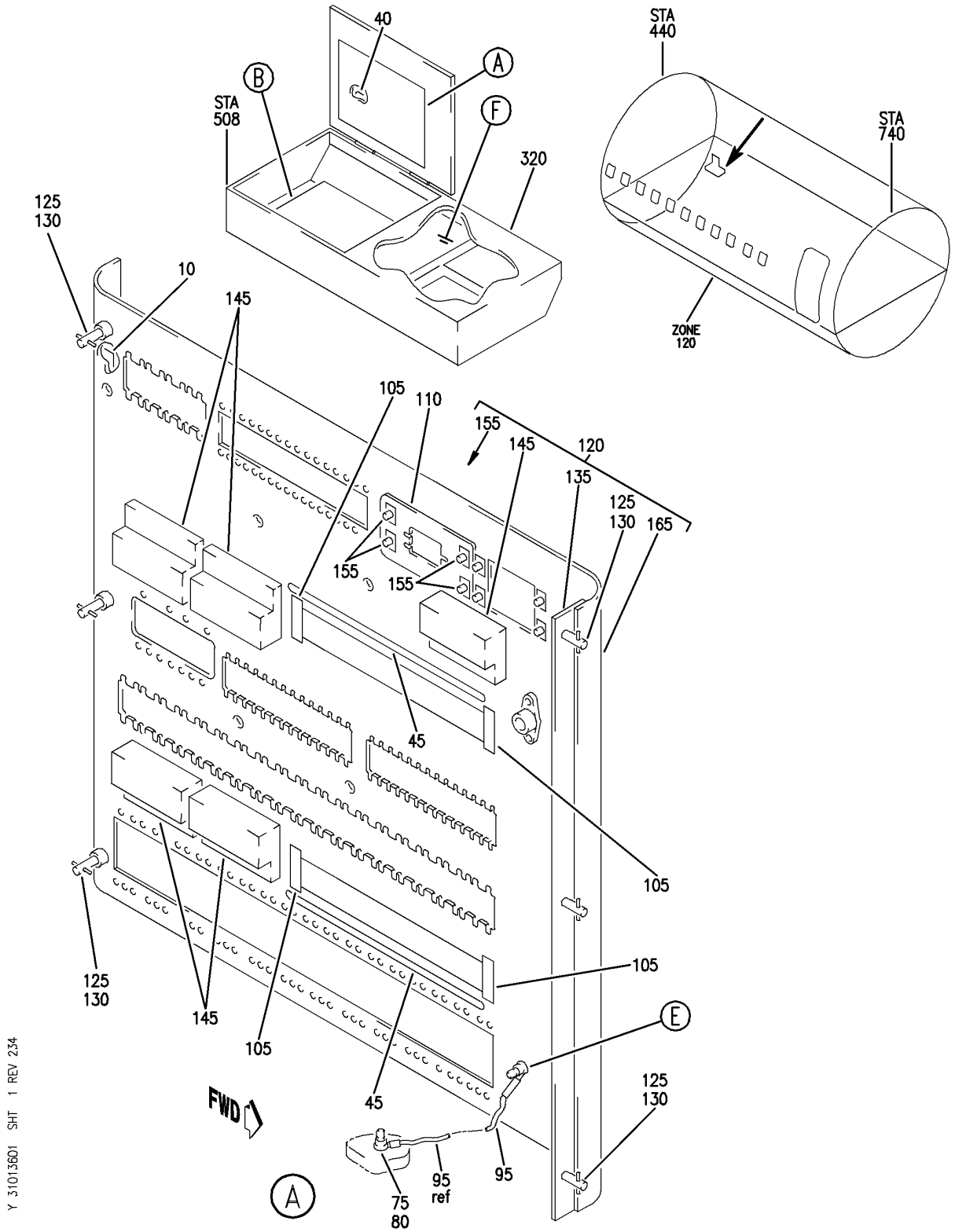

PANEL INSTL-P36 L MISC RELAY (INDICATING/ RECORDIMG SYSTEMS ONLY)
FIGURE 1 (SHEET 1)

BOEING PROPRIETARY - Copyright © - Unpublished Work - See title page for details.

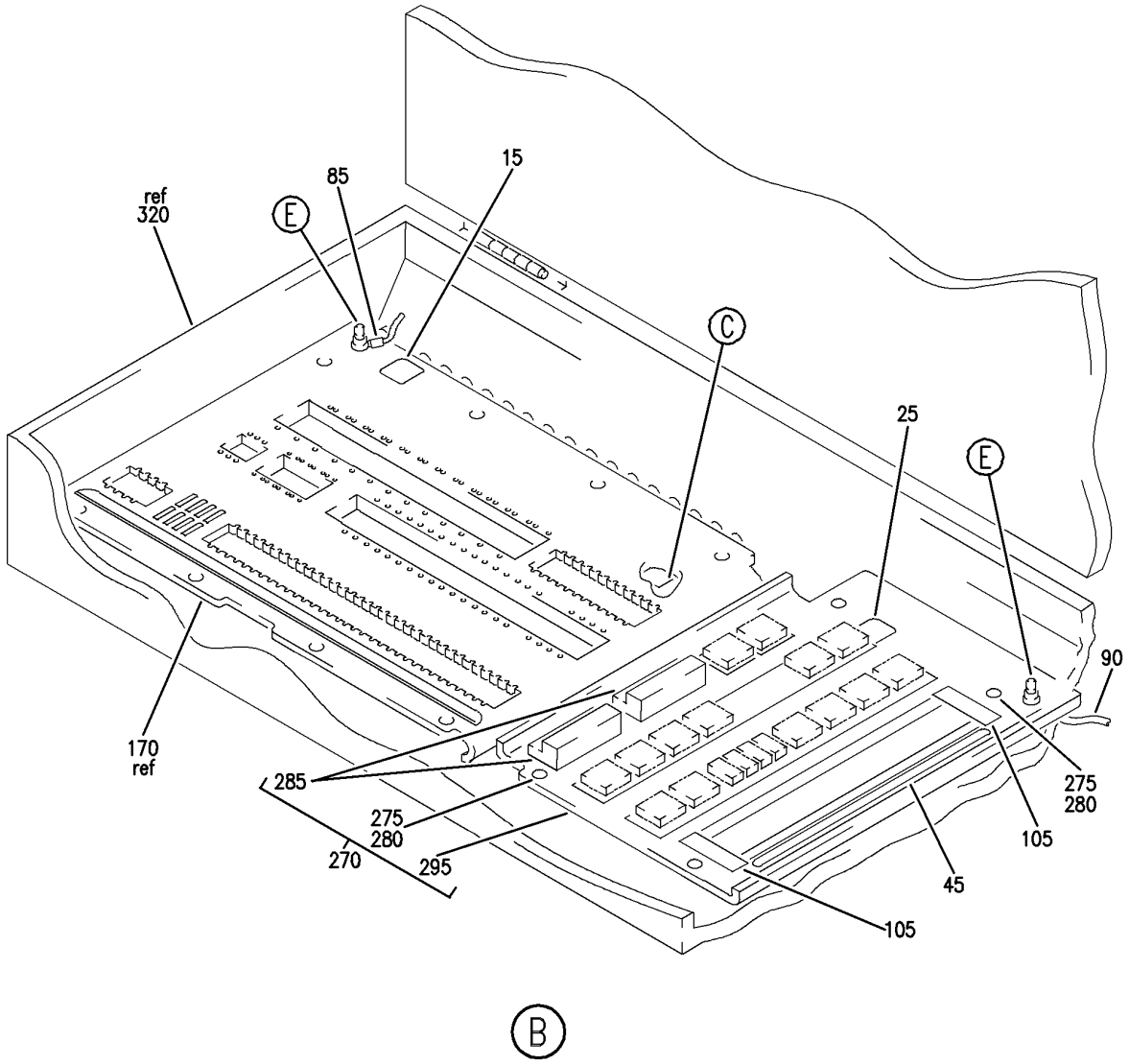

Y 310136D1 SHT 2 REV 234

PANEL INSTL-P36 L MISC RELAY (INDICATING/ RECORDIMG SYSTEMS ONLY)
FIGURE 1 (SHEET 2)

BOEING PROPRIETARY - Copyright © - Unpublished Work - See title page for details.

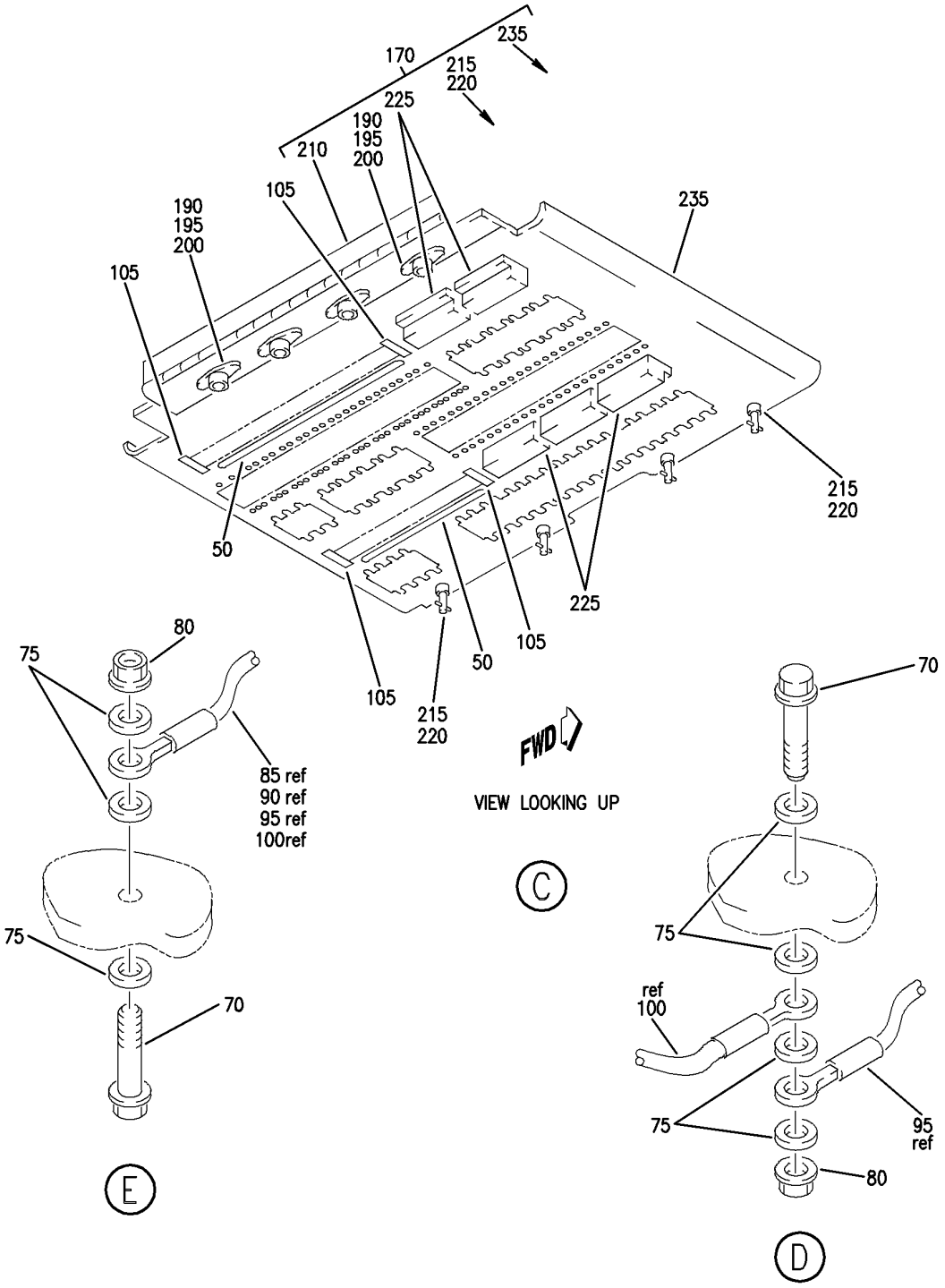

PANEL INSTL-P36 L MISC RELAY (INDICATING/ RECORDIMG SYSTEMS ONLY)
FIGURE 1 (SHEET 3)

BOEING PROPRIETARY - Copyright © - Unpublished Work - See title page for details.

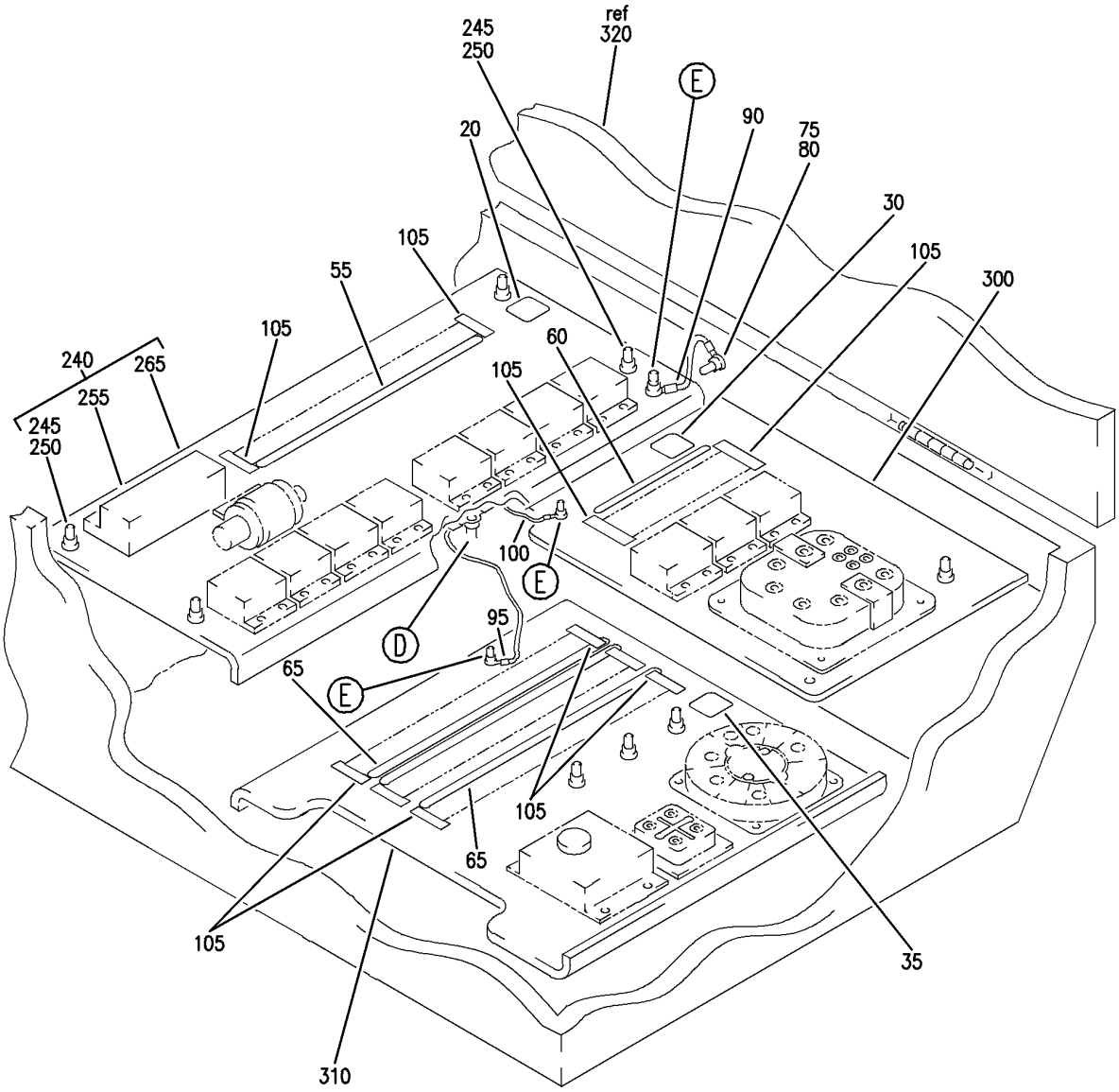

F

Y 310136O1 SHT 4 REV 234

PANEL INSTL-P36 L MISC RELAY (INDICATING/ RECORDIMG SYSTEMS ONLY)
FIGURE 1 (SHEET 4)

BOEING PROPRIETARY - Copyright © - Unpublished Work - See title page for details.

FIG ITEM	PART NUMBER	1 2 3 4 5 6 7 NOMENCLATURE	EFFECT FROM TO	UNITS PER ASSY
1		PANEL INSTL-P36 L MISC RELAY (INDICATING/ RECORDIMG SYSTEMS ONLY)	103106 108120	
- 3	284N1125-94	PANEL INSTL-P36 L MISC RELAY (INDICATING/ RECORDING SYSTEMS ONLY) FOR NHA/OTHER SYS DET SEE: 24-00-58-05C	108120	RF

MISSING ITEM NUMBERS NOT APPLICABLE

- ITEM NOT ILLUSTRATED

BOEING PROPRIETARY - Copyright © - Unpublished Work - See title page for details.

FIG ITEM	PART NUMBER	1 2 3 4 5 6 7 NOMENCLATURE	EFFECT FROM TO	UNITS PER ASSY
1				
- 7	MODREF31944	PANEL INSTL-P36 L MISC RELAY (INDICATING/ RECORDING SYSTEMS ONLY) MODULE NUMBER: 284N1125-123 REV A FOR OTHER SYS DETAILS SEE: 11-36-08-03C 21-25-71-02C 21-33-71-02C 21-51-56-01C 21-58-71-02C 23-12-00-05 23-31-54-01C 23-34-52-01C 24-21-51-01A 26-15-71-02C 26-16-71-01C 26-22-71-01C 27-48-52-03C 27-51-71-03C 27-58-71-02C 27-62-71-03C 29-11-71-03C 29-21-71-01C 30-21-71-03C 30-34-51-01C 32-09-02-03C 32-35-71-01C 32-42-71-02C 32-44-71-02C 32-61-71-02C 34-12-71-02C 34-21-71-02C 34-22-52-01C 34-61-52-01C 36-11-71-02C 73-21-55-01C 74-31-71-02C 76-11-71-02C 77-12-71-01C 78-34-71-02C 78-36-71-02C 80-11-71-02C	103106	1
10	BAC27NEX0173	.DECAL- PLACARD CONTENT: A	103106 108120	1
15	BAC27NEX0176	.DECAL- PLACARD CONTENT: D	103106 108120	1

MISSING ITEM NUMBERS NOT APPLICABLE

- ITEM NOT ILLUSTRATED

BOEING PROPRIETARY - Copyright © - Unpublished Work - See title page for details.

FIG ITEM	PART NUMBER	1 2 3 4 5 6 7 NOMENCLATURE	EFFECT FROM TO	UNITS PER ASSY
1				
20	BAC27NEX0247	.DECAL-	103106	1
		PLACARD CONTENT:	108120	
		E		
25	BAC27NEX0248	.DECAL-	103106	1
		PLACARD CONTENT:	108120	
		F		
30	BAC27NEX0175	.DECAL-	103106	1
		PLACARD CONTENT:	108120	
		C		
35	BAC27NEX0174	.DECAL-	103106	1
		PLACARD CONTENT:	108120	
		B		
40	BAC27NEX2343	.DECAL-	103106	1
		PLACARD CONTENT:	108120	
		P36 LEFT MISCELLANEOUS		
		ELECTRICAL EQUIPMENT		
45	BAC27NEX0933	.DECAL-	103106	3
		PLACARD CONTENT:	108120	
		1 THRU 36		
50	BAC27NEX2420	.DECAL-	103106	2
		PLACARD CONTENT:	108120	
		1 THRU 39		
55	BAC27NEX0935	.DECAL-	103106	1
		PLACARD CONTENT:	108120	
		1 THRU 28		
60	BAC27NEX0937	.DECAL-	103106	1
		PLACARD CONTENT:	108120	
		1 THRU 17		
65	BAC27TEX0384	.DECAL-	103106	3
		PLACARD CONTENT:	108120	
		1 THRU 28		
70	NAS1801-4-8	.SCREW-	108120	7
70	BACS12HN4-8	.SCREW-	103106	7
75	NAS1149D0416H	.WASHER	103106	24
			108120	
80	MS21042L4	.NUT-	108120	9
80	PLH54CD	.NUT	103106	9
		SUPPLIER CODE:		
		VF0224		
		SPECIFICATION NUMBER:		
		BACN10YR4CD		
		OPTIONAL PART:		
		H52732-4CD		
		V15653		
85	287N1404-1	.JUMPER ASSY	103106	1
			108120	
90	287N1404-10	.JUMPER ASSY	103106	3
			108120	

MISSING ITEM NUMBERS NOT APPLICABLE

— ITEM NOT ILLUSTRATED

BOEING PROPRIETARY - Copyright © - Unpublished Work - See title page for details.

FIG ITEM	PART NUMBER	1 2 3 4 5 6 7 NOMENCLATURE	EFFECT FROM TO	UNITS PER ASSY
1				
95	287N1404-13	.JUMPER ASSY	103106 108120	3
100	287N1404-8	.JUMPER	103106 108120	2
105	H49-2	.CLAMP SUPPLIER CODE: V34941 SPECIFICATION NUMBER: BACC49A2 OPTIONAL PART: MF104-2 V6E102	103106 108120	20
120	284N1124-82	.PLATE ASSY-MTG	108120	1
120	284N1124-85	.PLATE ASSY-MTG	103106	1
125	BACS21Y4R	..STUD ASSY	103106 108120	6
130	1127700	..WASHER SUPPLIER CODE: V60119 SPECIFICATION NUMBER: BACW10X4 OPTIONAL PART: 2600LW V71286	103106 108120	6
135	284N1124-2	..HINGE	103106 108120	1
		ATTACHING PARTS		
- 140	BACR15BA4D	..RIVET- SIZE DETERMINED ON INSTL. -------*-------	103106 108120	5
145	YHLZG16-1	..BLOCK-GND SUPPLIER CODE: V09922	103106 108120	5
		ATTACHING PARTS		
- 150	BACR15BB5ADC	..RIVET- SIZE DETERMINED ON INSTL. -------*-------	103106 108120	20
165	284N1124-81	..PLATE	108120	1
165	284N1124-86	..PLATE	103106	1
170	284N1124-87	.PLATE ASSY-MTG	103106 108120	1
		ATTACHING PARTS		
- 175	NAS1801-3-7	.SCREW-	108120	4
- 175	BACS12HN3-7	.SCREW-	103106	4
- 180	NAS1149D0332J	.WASHER	103106 108120	4

MISSING ITEM NUMBERS NOT APPLICABLE

- ITEM NOT ILLUSTRATED

BOEING PROPRIETARY - Copyright © - Unpublished Work - See title page for details.

FIG ITEM	PART NUMBER	1 2 3 4 5 6 7 NOMENCLATURE	EFFECT FROM TO	UNITS PER ASSY
1				
- 185	BRC600-8-3	.NUT	103106	4
		SUPPLIER CODE:	108120	
		V52828		
		SPECIFICATION NUMBER:		
		BACN10YD1		
		OPTIONAL PART:		
		130120		
		V60119		
		-------*-------		
190	NAS603-7P	..SCREW	103106	4
			108120	
195	NAS1149D0332J	..WASHER	103106	4
			108120	
200	F171-3	..NUTPLATE	103106	4
		SUPPLIER CODE:	108120	
		V72962		
		SPECIFICATION NUMBER:		
		BACN10JB3		
		OPTIONAL PART:		
		43600-02		
		V80539		
		BRF210A3		
		V52828		
		BRF270A3		
		V52828		
		ATTACHING PARTS		
- 205	BACR15BA3AD	..RIVET-	103106	8
		SIZE DETERMINED ON INSTL.	108120	
		-------*-------		
210	284N1124-30	..HINGE ASSY	103106	1
			108120	
215	BACS21Y4R	..STUD ASSY	103106	4
			108120	
220	1127700	..WASHER	103106	4
		SUPPLIER CODE:	108120	
		V60119		
		SPECIFICATION NUMBER:		
		BACW10X4		
		OPTIONAL PART:		
		2600LW		
		V71286		
225	YHLZG16-1	..BLOCK-GND	103106	5
		SUPPLIER CODE:	108120	
		V09922		
		ATTACHING PARTS		
- 230	BACR15BB5ADC	..RIVET-	103106	20
		SIZE DETERMINED ON INSTL.	108120	
		-------*-------		

MISSING ITEM NUMBERS NOT APPLICABLE

- ITEM NOT ILLUSTRATED

BOEING PROPRIETARY - Copyright © - Unpublished Work - See title page for details.

FIG ITEM	PART NUMBER	1 2 3 4 5 6 7 NOMENCLATURE	EFFECT FROM TO	UNITS PER ASSY
1				
235	284N1124-88	..PLATE	103106 108120	1
240	284N1124-78	.PLATE ASSY-MTG	103106 108120	1
245	BACS21Y4R	..STUD ASSY	103106 108120	4
250	1127700	..WASHER SUPPLIER CODE: V60119 SPECIFICATION NUMBER: BACW10X4 OPTIONAL PART: 2600LW V71286	103106 108120	4
255	YHLZG16-1	..BLOCK-GND SUPPLIER CODE: V09922 ATTACHING PARTS	103106 108120	1
- 260	BACR15BB5ADC	..RIVET- SIZE DETERMINED ON INSTL. -------*-------	103106 108120	4
265	284N1124-79	..PLATE	103106 108120	1
270	284N1124-72	.PLATE ASSY-MTG	103106 108120	1
275	BACS21Y4R	..STUD ASSY	103106 108120	4
280	1127700	..WASHER SUPPLIER CODE: V60119 SPECIFICATION NUMBER: BACW10X4 OPTIONAL PART: 2600LW V71286	103106 108120	4
285	YHLZG16-1	..BLOCK-GND SUPPLIER CODE: V09922 ATTACHING PARTS	103106 108120	2
- 290	BACR15BB5ADC	..RIVET- SIZE DETERMINED ON INSTL. -------*-------	103106 108120	8
295	284N1124-73	..PLATE	103106 108120	1
300	284N1124-76	.PLATE ASSY-MTG ATTACHING PARTS	103106 108120	1
- 305	NAS1801-3-7	.SCREW-	108120	4

MISSING ITEM NUMBERS NOT APPLICABLE

- ITEM NOT ILLUSTRATED

BOEING PROPRIETARY - Copyright © - Unpublished Work - See title page for details.

FIG ITEM	PART NUMBER	1 2 3 4 5 6 7 NOMENCLATURE	EFFECT FROM TO	UNITS PER ASSY
1				
- 305	BACS12HN3-7	.SCREW-	103106	4
		-------*-------		
310	284N1124-74	.PLATE ASSY-MTG	103106 108120	1
		ATTACHING PARTS		
- 315	NAS1801-3-7	.SCREW-	108120	2
- 315	BACS12HN3-7	.SCREW-	103106	4
		-------*-------		
320	13331000-4	.ENCLOSURE ASSY-	103106 108120	1
		SUPPLIER CODE:		
		V23296		

MISSING ITEM NUMBERS NOT APPLICABLE

- ITEM NOT ILLUSTRATED

BOEING PROPRIETARY - Copyright © - Unpublished Work - See title page for details.

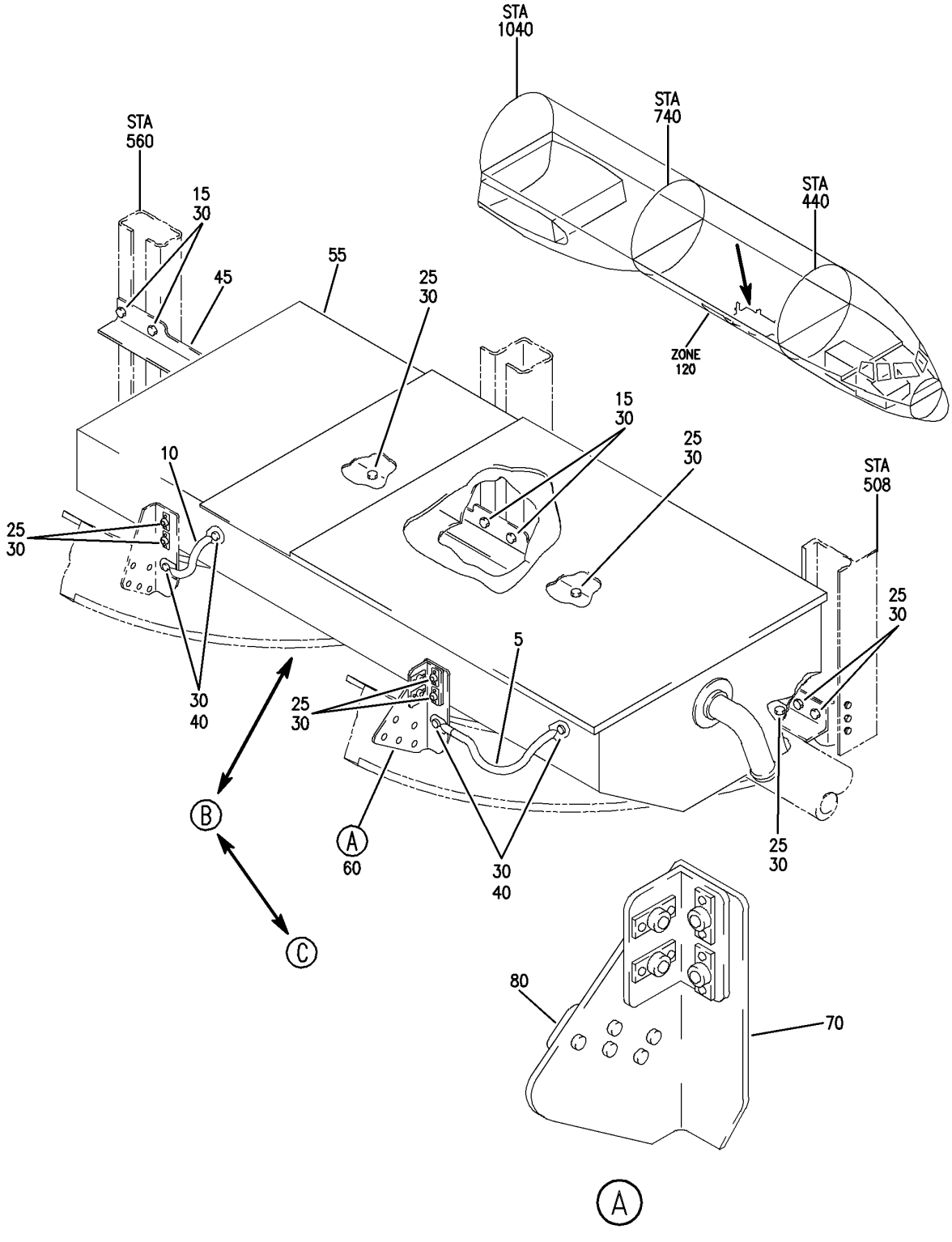

PANEL INSTL-P36 AND P37 MISC E/E EQPT (LEFT MISCELLANEOUS ELECTRICAL EQUIPMENT PANEL P36 ONLY)
FIGURE 1B (SHEET 1)

BOEING PROPRIETARY - Copyright © - Unpublished Work - See title page for details.

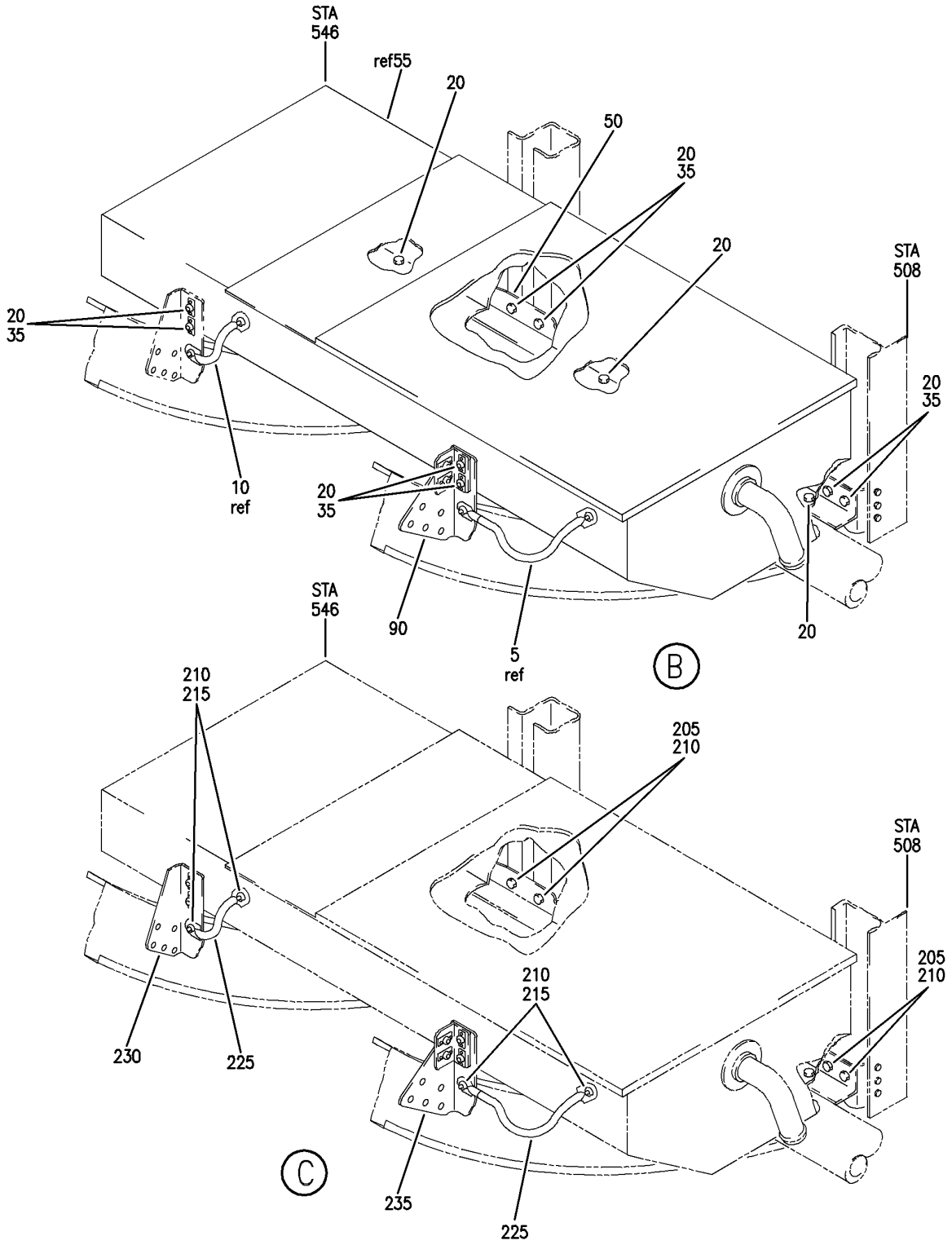

PANEL INSTL-P36 AND P37 MISC E/E EQPT (LEFT MISCELLANEOUS ELECTRICAL EQUIPMENT PANEL P36 ONLY)
FIGURE 1B (SHEET 2)

BOEING PROPRIETARY - Copyright © - Unpublished Work - See title page for details.

FIG ITEM	PART NUMBER	1 2 3 4 5 6 7 NOMENCLATURE	EFFECT FROM TO	UNITS PER ASSY
1B				
		PANEL INSTL-P36 AND P37	002004	
		MISC E/E EQPT	006999	
		(LEFT MISCELLANEOUS		
		ELECTRICAL EQUIPMENT		
		PANEL P36 ONLY)		
- 1	284N1525-32	SHIELD INSTL-P36 MISC ELEC	002004	RF
		EQPT (LEFT MISCELLANEOUS	006100	
		ELECTRICAL EQUIPMENT	107107	
		PANEL P36 ONLY)	121503	
		FOR NHA SEE:	904999	
		24-00-58-01C		
5	RBEJ40E20-48	.JUMPER ASSY	002004	1
		SUPPLIER CODE:	006100	
		V1GK47	107107	
		SPECIFICATION NUMBER:	121503	
		BACJ40E20-48	904999	
		OPTIONAL PART:		
		740E20-48		
		V91812		
10	RBEJ40E20-28	.JUMPER ASSY	002004	1
		SUPPLIER CODE:	006100	
		V1GK47	107107	
		SPECIFICATION NUMBER:	121503	
		BACJ40E20-28	904999	
		OPTIONAL PART:		
		740E20-28		
		V91812		
15	NAS6603-2	.BOLT	002004	4
			006100	
			107107	
			121503	
			904999	
20	NAS6603-2	.BOLT	002004	11
			006100	
			107107	
			121503	
			904999	
25	NAS1801-4-10	.SCREW	002004	9
			006100	
			107107	
			121503	
			904999	
30	AN960PD416L	.WASHER	002004	15
			006100	
			107107	
			121503	
			904999	

MISSING ITEM NUMBERS NOT APPLICABLE

- ITEM NOT ILLUSTRATED

BOEING PROPRIETARY - Copyright © - Unpublished Work - See title page for details.

FIG ITEM	PART NUMBER	1 2 3 4 5 6 7 NOMENCLATURE	EFFECT FROM TO	UNITS PER ASSY
1B				
35	AN960PD416L	.WASHER	002004 006100 107107 121503 904999	8
40	BRH10A4	.NUT SUPPLIER CODE: V52828 SPECIFICATION NUMBER: BACN10JC4 OPTIONAL PART: T6S428J V11815 96-048 V80539 VN303A048 V92215 RMLH9075-4W V72962 NS202101-048 V80539 H10-4BAC V15653	002004 006100 107107 121503 904999	4
55	284N1125-1	.PANEL ASSY-P36 RELAY POSITION DATA: L VARIABLE DRAWING REF: 284N1125-5012 284N1125-5023 284N1125-5030 284N1125-5039 284N1125-5049 284N1125-5050 284N1125-5054 REWORKED BY SB: 34-0200 REWORKED BY ALERT SB: 27A0130	002004 006100 107107 121503 904999	1
55	284N1125-1	.PANEL ASSY-P36 RELAY POSITION DATA: L REWORKED BY ALERT SB: 27A0130 FUNCTIONAL REFERENCE: AIR CONDITIONING FOR DETAILS SEE 21-25-71-02 21-33-71-02 21-51-56-01	002004 006100 107107 121503 904999	1

MISSING ITEM NUMBERS NOT APPLICABLE

— ITEM NOT ILLUSTRATED

BOEING PROPRIETARY - Copyright © - Unpublished Work - See title page for details.

FIG ITEM	PART NUMBER	1 2 3 4 5 6 7 NOMENCLATURE	EFFECT FROM TO	UNITS PER ASSY
1B		21-58-71-02 COMMUNICATIONS FOR DETAILS SEE 23-22-53-01 23-31-54-01 23-34-52-01 ENGINE CONTROLS FOR DETAILS SEE 76-11-71-02 EXHAUST FOR DETAILS SEE 78-34-71-02 78-36-71-02 ENGINE FUEL & CONTROL FOR DETAILS SEE 73-21-55-01 ENGINE INDICATING FOR DETAILS SEE 77-12-71-01 FIRE PROTECTION FOR DETAILS SEE 26-15-71-02 26-16-71-01 26-22-71-01 FLIGHT CONTROL FOR DETAILS SEE 27-48-52-03 27-51-71-03 27-58-71-02 27-62-71-03 HYDRAULIC POWER FOR DETAILS SEE 29-11-71-03 29-21-71-01 ICE & RAIN PROTECTION FOR DETAILS SEE 30-21-71-03 30-34-51-01 IGNITION FOR DETAILS SEE 74-31-71-02 LANDING GEAR FOR DETAILS SEE 32-09-02-03 32-12-71-01 32-35-71-01 32-42-71-02 32-44-71-02 32-61-71-02		

MISSING ITEM NUMBERS NOT APPLICABLE

– ITEM NOT ILLUSTRATED

BOEING PROPRIETARY - Copyright © - Unpublished Work - See title page for details.

FIG ITEM	PART NUMBER	1 2 3 4 5 6 7 NOMENCLATURE	EFFECT FROM TO	UNITS PER ASSY
1B				
		NAVIGATION FOR DETAILS SEE 34-12-71-02 34-61-52-01 PNEUMATIC FOR DETAILS SEE 36-11-71-02 PLACARDS AND MARKINGS FOR DETAILS SEE 11-36-08-03 ENGINE STARTING FOR DETAILS SEE 80-11-71-02 INDICATING/RECORDING FOR DETAILS SEE 31-01-36-07		
90	284N1525-31	.BRACKET ASSY	002004 006100 107107 121503 904999	1
- 200	284N1525-62	SHIELD INSTL-P36 MISC ELEC EQPT (LEFT MISCELLANEOUS ELECTRICAL EQUIPMENT PANEL P36 ONLY) FOR NHA SEE: 24-00-58-05	101102 504903	RF
- 200	284N1525-69	SHIELD INSTL-P36 MISC ELEC EQPT (LEFT MISCELLANEOUS ELECTRICAL EQUIPMENT PANEL P36 ONLY) FOR NHA SEE: 24-00-58-05	108120	RF
- 200	MODREF10795	SHIELD INSTL-P36 MISC ELEC EQPT (LEFT MISCELLANEOUS ELECTRICAL EQUIPMENT PANEL P36 ONLY) MODULE NUMBER: 284N1525-69 REV A	103106	1
205	NAS6603-2	.BOLT	101102 504903	4
205	NAS6604-2	.BOLT- OPTIONAL PART: BACB30NR4K2	103106 108120	4
205	BACB30NR4K2	.BOLT- OPTIONAL PART: NAS6604-2	103106 108120	4

MISSING ITEM NUMBERS NOT APPLICABLE

- ITEM NOT ILLUSTRATED

BOEING PROPRIETARY - Copyright © - Unpublished Work - See title page for details.

FIG ITEM	PART NUMBER	1 2 3 4 5 6 7 NOMENCLATURE	EFFECT FROM TO	UNITS PER ASSY
1B				
210	NAS1149D0416H	.WASHER	101106 108120 504903	6
215	BRH10A4	.NUT SUPPLIER CODE: V52828 SPECIFICATION NUMBER: BACN10JC4 OPTIONAL PART: T6S428J V11815 96-048 V80539 VN303A048 V92215 RMLH9075-4W V72962 NS202101-048 V80539 H10-4BAC V15653	101106 108120 504903	2
220	RBEJ40E20-48	.JUMPER ASSY SUPPLIER CODE: V1GK47 SPECIFICATION NUMBER: BACJ40E20-48 OPTIONAL PART: 740E20-48 V91812	101106 108120 504903	1
225	RBEJ40E20-28	.JUMPER ASSY SUPPLIER CODE: V1GK47 SPECIFICATION NUMBER: BACJ40E20-28 OPTIONAL PART: 740E20-28 V91812	101106 108120 504903	1
230	284N1525-28	.BRACKET ASSY	101106 108120 504903	1
235	284N1525-31	.BRACKET ASSY	101106 108120 504903	1

MISSING ITEM NUMBERS NOT APPLICABLE

— ITEM NOT ILLUSTRATED

BOEING PROPRIETARY - Copyright © - Unpublished Work - See title page for details.

NON-ILLUSTRATED FIGURE

THE ITEMS REFLECTED IN THIS FIGURE ARE INTENTIONALLY NON-ILLUSTRATED. THEY ARE REFERENCED TO EITHER A NEXT HIGHER OR NEXT LOWER ASSEMBLY/INSTALLATION FIGURE.

BOEING PROPRIETARY - Copyright © - Unpublished Work - See title page for details.

FIG ITEM	PART NUMBER	1 2 3 4 5 6 7 NOMENCLATURE	EFFECT FROM TO	UNITS PER ASSY
5				
		PANEL INSTL-LEFT MISC RELAY P36	101102 504903	
- 1	284N1125-44	PANEL INSTL-P36 MISC RELAY REWORKED BY ALERT SB: 27A0130 FOR NHA SEE: 24-00-58-05C	504903	RF
- 2	284N1125-56	PANEL INSTL-P36 MISC RELAY REWORKED BY ALERT SB: 27A0130 FOR NHA SEE: 24-00-58-05C	101102	RF
- 10	284N1125-1003	.OPTION PACKAGE ASSY- MISCELLANEOUS DATA: ETOPS REWORKED BY ALERT SB: 27A0130 FOR DETAILS SEE: 21-58-71-02A	101102	1
- 15	284N1125-1004	.OPTION PACKAGE ASSY- MISCELLANEOUS DATA: FMC REWORKED BY ALERT SB: 27A0130 FUNCTIONAL REFERENCE: NAVIGATION FOR DETAILS SEE 34-22-52-01A 34-61-52-01A	101102	1
- 20	284N1125-1005	.OPTION PACKAGE ASSY- MISCELLANEOUS DATA: AUDIO ENTERTAINMENT REWORKED BY ALERT SB: 27A0130 FOR DETAILS SEE: 23-34-52-01A	101102 504903	1

MISSING ITEM NUMBERS NOT APPLICABLE

- ITEM NOT ILLUSTRATED

BOEING PROPRIETARY - Copyright © - Unpublished Work - See title page for details.

FIG ITEM	PART NUMBER	1 2 3 4 5 6 7 NOMENCLATURE	EFFECT FROM TO	UNITS PER ASSY
5				
- 40	284N1125-1010	.OPTION PACKAGE ASSY- MISCELLANEOUS DATA: ROLLS ROYCE ENGINES 757-200 REWORKED BY ALERT SB: 27A0130 FUNCTIONAL REFERENCE: ICE & RAIN PROTECTION FOR DETAILS SEE 30-21-71-03A PNEUMATIC FOR DETAILS SEE 36-11-71-02A ENGINE FUEL & CONTROL FOR DETAILS SEE 73-21-55-01A IGNITION FOR DETAILS SEE 74-31-71-02A ENGINE CONTROLS FOR DETAILS SEE 76-11-71-02A ENGINE INDICATING FOR DETAILS SEE 77-12-71-01A EXHAUST FOR DETAILS SEE 78-34-71-02A ENGINE STARTING FOR DETAILS SEE 80-11-71-02A	101102 504903	1
- 50	284N1125-1013	.OPTION PACKAGE ASSY- MISCELLANEOUS DATA: MINOR MODEL 757-200 REWORKED BY ALERT SB: 27A0130 FUNCTIONAL REFERENCE: AIR CONDITIONING FOR DETAILS SEE 21-51-56-01A FIRE PROTECTION FOR DETAILS SEE 26-16-71-01A EXHAUST FOR DETAILS SEE 78-36-71-02A	101102 504903	1

MISSING ITEM NUMBERS NOT APPLICABLE

- ITEM NOT ILLUSTRATED

BOEING PROPRIETARY - Copyright © - Unpublished Work - See title page for details.

FIG ITEM	PART NUMBER	1 2 3 4 5 6 7 NOMENCLATURE	EFFECT FROM TO	UNITS PER ASSY
5				
- 55	284N1125-1015	.OPTION PACKAGE ASSY- (PASSENGER ADDRESS AND ENTERTAINMENT ONLY) REWORKED BY ALERT SB: 27A0130 FOR DETAILS SEE: 23-31-54-01A	101102 504903	1
- 70	284N1125-1018	.OPTION PACKAGE ASSY- MISCELLANEOUS DATA: MAJOR MODEL 757 REWORKED BY ALERT SB: 27A0130 FUNCTIONAL REFERENCE: PLACARDS AND MARKINGS FOR DETAILS SEE 11-36-08-03A AIR CONDITIONING FOR DETAILS SEE 21-25-71-02A 21-33-71-02A 21-51-56-01A 21-58-71-02A EQUIPMENT/FURNISHINGS FOR DETAILS SEE 25-17-60-02A FIRE PROTECTION FOR DETAILS SEE 26-15-71-02A 26-22-71-01A FLIGHT CONTROL FOR DETAILS SEE 27-48-52-03A 27-51-71-03A 27-58-71-02A 27-62-71-03A HYDRAULIC POWER FOR DETAILS SEE 29-11-71-03A 29-21-71-01A ICE & RAIN PROTECTION FOR DETAILS SEE 30-34-51-01A LANDING GEAR FOR DETAILS SEE 32-09-02-03A 32-35-71-01A 32-42-71-02A 32-44-71-02A 32-61-71-02A	101102 504903	1

MISSING ITEM NUMBERS NOT APPLICABLE

- ITEM NOT ILLUSTRATED

BOEING PROPRIETARY - Copyright © - Unpublished Work - See title page for details.

FIG ITEM	PART NUMBER	1 2 3 4 5 6 7 NOMENCLATURE	EFFECT FROM TO	UNITS PER ASSY
5		NAVIGATION FOR DETAILS SEE 34-12-71-02A 34-61-52-01A PNEUMATIC FOR DETAILS SEE 36-11-71-02A IGNITION FOR DETAILS SEE 74-31-71-02A ENGINE INDICATING FOR DETAILS SEE 77-12-71-01A EXHAUST FOR DETAILS SEE 78-34-71-02A ENGINE STARTING FOR DETAILS SEE 80-11-71-02A		
- 125	284N1125-1029	.OPTION PACKAGE ASSY- (EQUIPMENT COOLING SYSTEM ONLY) REWORKED BY ALERT SB: 27A0130 FUNCTIONAL REFERENCE: NAVIGATION FOR DETAILS SEE 34-22-52-01A 34-61-52-01A	504903	1
- 130	284N1125-1030	.OPTION PACKAGE ASSY- (EQUIPMENT COOLING SYSTEM ONLY) REWORKED BY ALERT SB: 27A0130 FUNCTIONAL REFERENCE: ENGINE CONTROLS FOR DETAILS SEE 76-11-71-02A ENGINE STARTING FOR DETAILS SEE 80-11-71-02A	504903	1
- 135	284N1125-1031	.OPTION PACKAGE ASSY- (IGNITION SYSTEM ONLY) REWORKED BY ALERT SB: 27A0130 FOR DETAILS SEE: 74-31-71-01A	504903	1

MISSING ITEM NUMBERS NOT APPLICABLE

- ITEM NOT ILLUSTRATED

BOEING PROPRIETARY - Copyright © - Unpublished Work - See title page for details.

FIG ITEM	PART NUMBER	1 2 3 4 5 6 7 NOMENCLATURE	EFFECT FROM TO	UNITS PER ASSY
5				
- 140	284N1125-1032	.OPTION PACKAGE ASSY- (EQUIPMENT COOLING SYSTEM ONLY) REWORKED BY ALERT SB: 27A0130 FOR DETAILS SEE: 23-22-53-01A	504903	1

MISSING ITEM NUMBERS NOT APPLICABLE

– ITEM NOT ILLUSTRATED

BOEING PROPRIETARY - Copyright © - Unpublished Work - See title page for details.

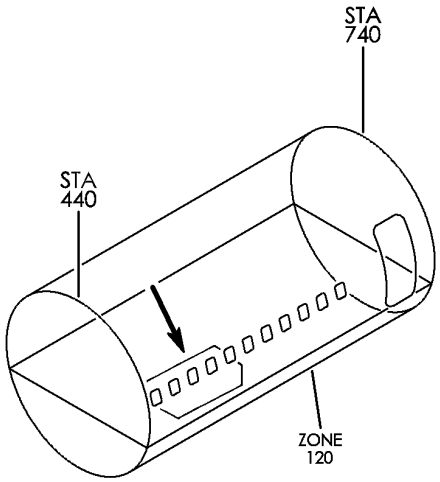

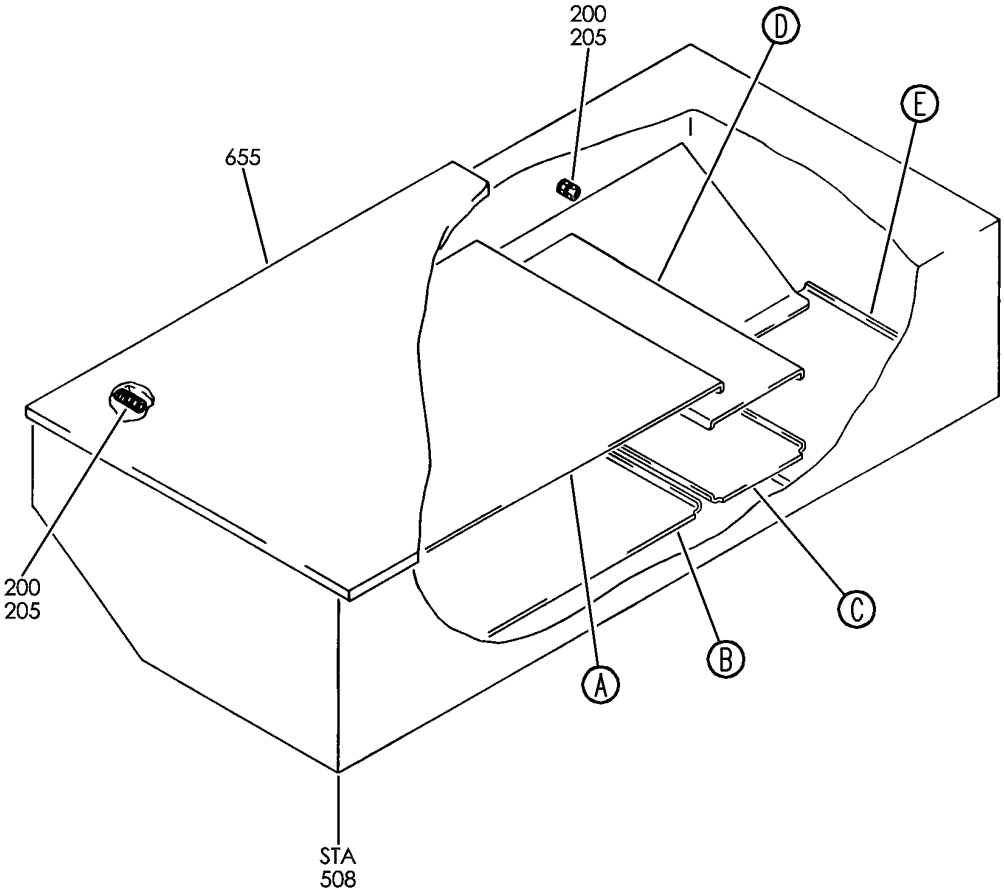

Y 31013607 SHT 1 REV 241

PANEL ASSY-P36 MISC RELAY (INDICATING/RECORDING SYSTEMS ONLY)
FIGURE 7 (SHEET 1)

BOEING PROPRIETARY - Copyright © - Unpublished Work - See title page for details.

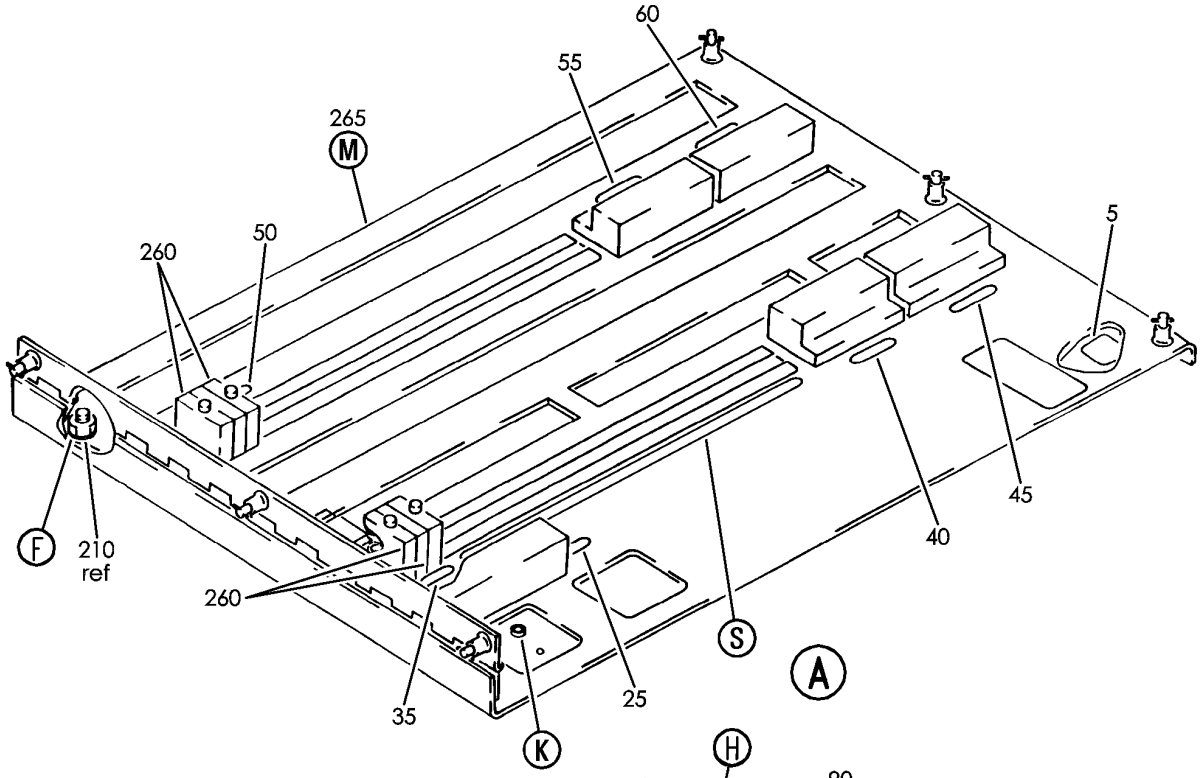

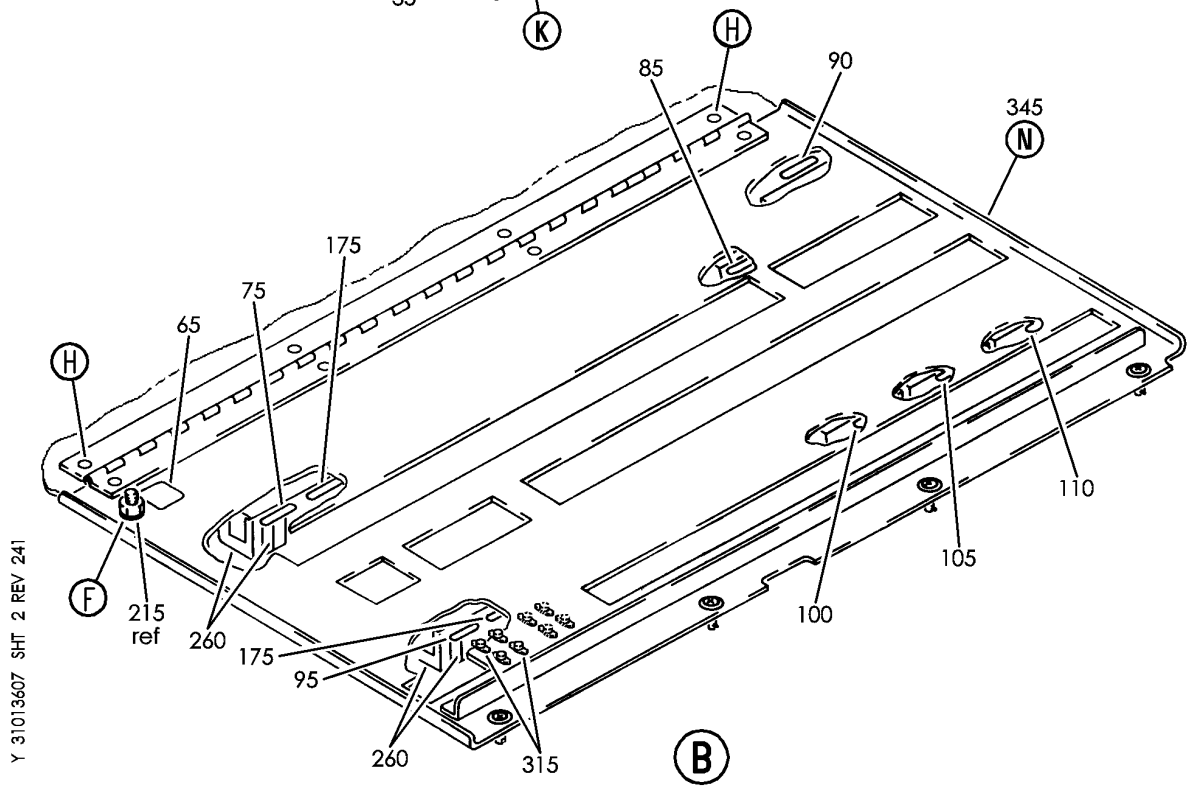

PANEL ASSY-P36 MISC RELAY (INDICATING/RECORDING SYSTEMS ONLY)
FIGURE 7 (SHEET 2)

BOEING PROPRIETARY - Copyright © - Unpublished Work - See title page for details.

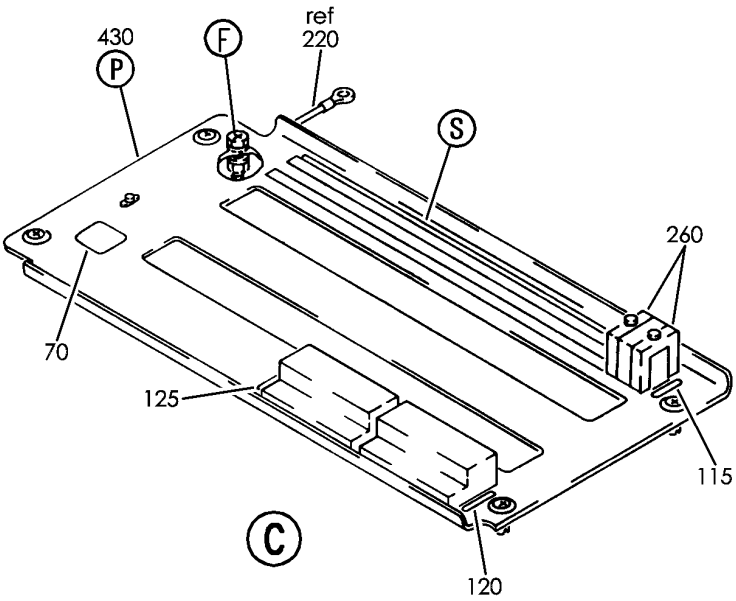

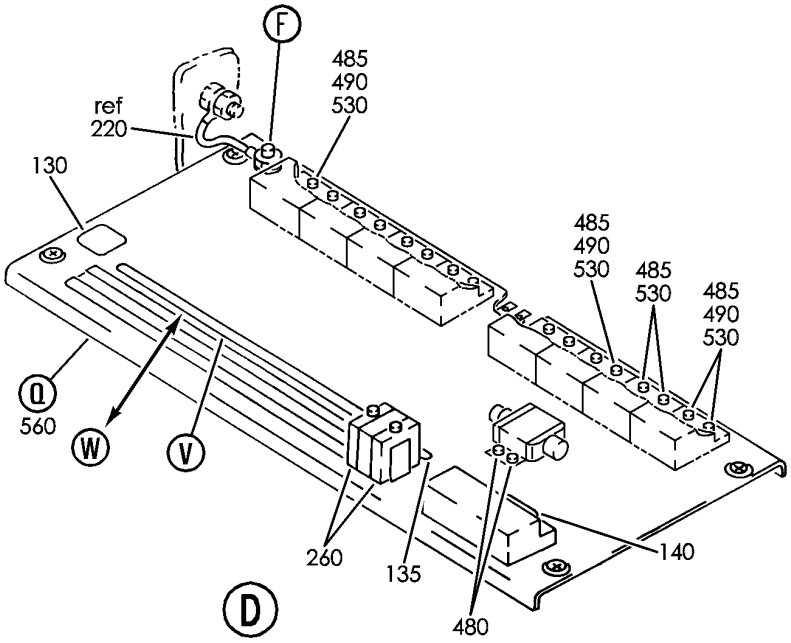

Y 31013607 SHT 3 REV 241

PANEL ASSY-P36 MISC RELAY (INDICATING/RECORDING SYSTEMS ONLY)
FIGURE 7 (SHEET 3)

BOEING PROPRIETARY - Copyright © - Unpublished Work - See title page for details.

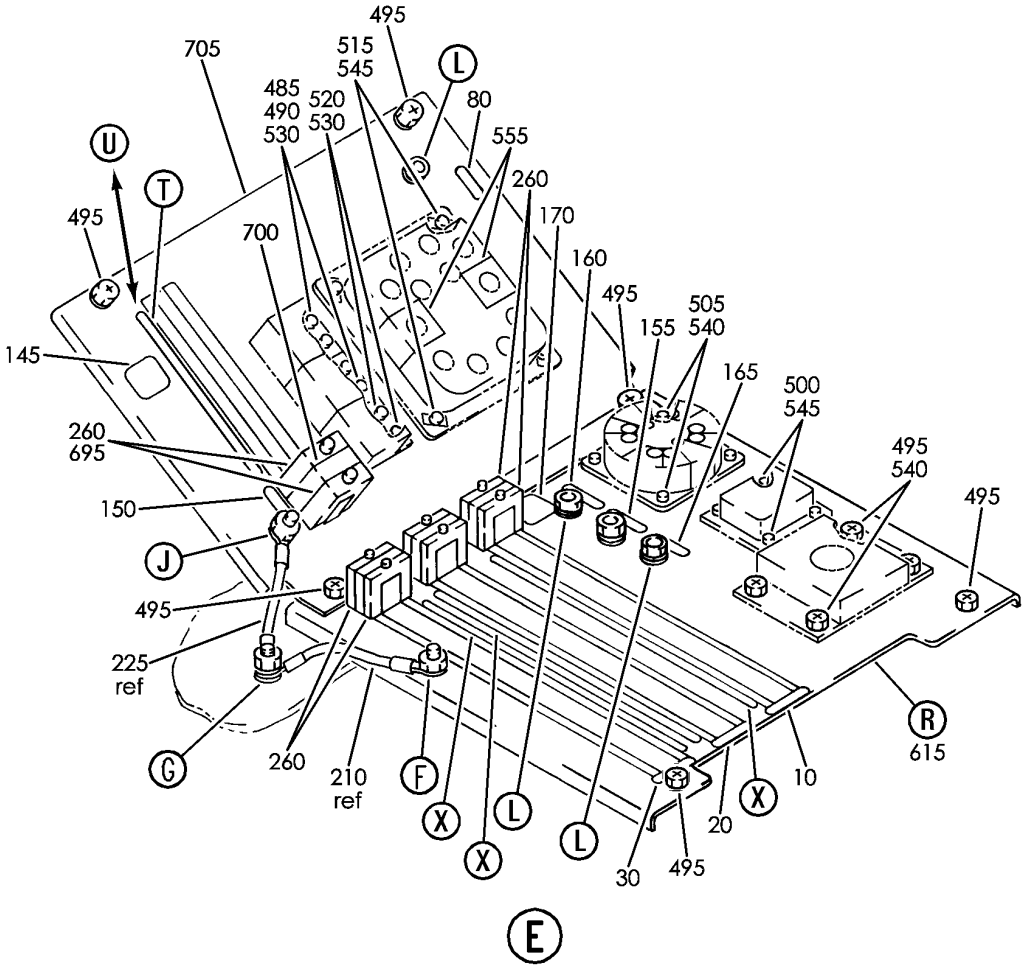

Y 31013607 SHT 4 REV 241

PANEL ASSY-P36 MISC RELAY (INDICATING/RECORDING SYSTEMS ONLY)
FIGURE 7 (SHEET 4)

BOEING PROPRIETARY - Copyright © - Unpublished Work - See title page for details.

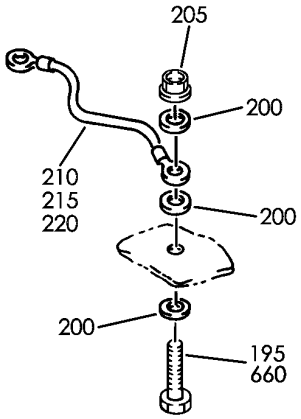

F

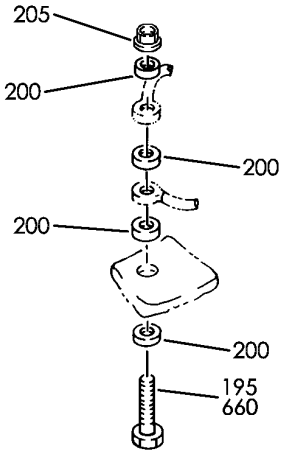

G

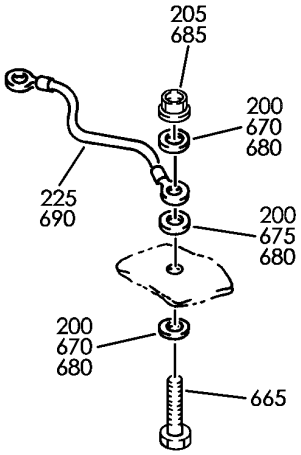

J

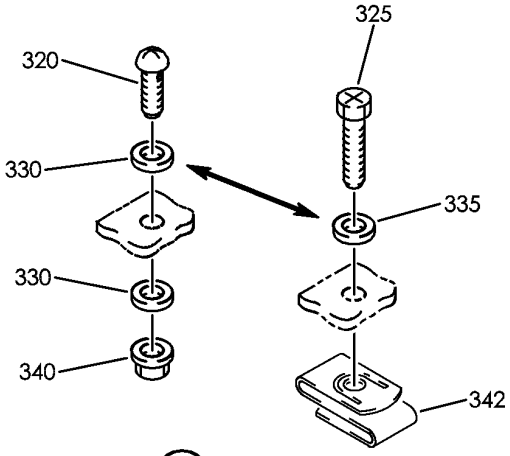

H

Y 31013607 SHT 5 REV 241

PANEL ASSY-P36 MISC RELAY (INDICATING/RECORDING SYSTEMS ONLY)
FIGURE 7 (SHEET 5)

BOEING PROPRIETARY - Copyright © - Unpublished Work - See title page for details.

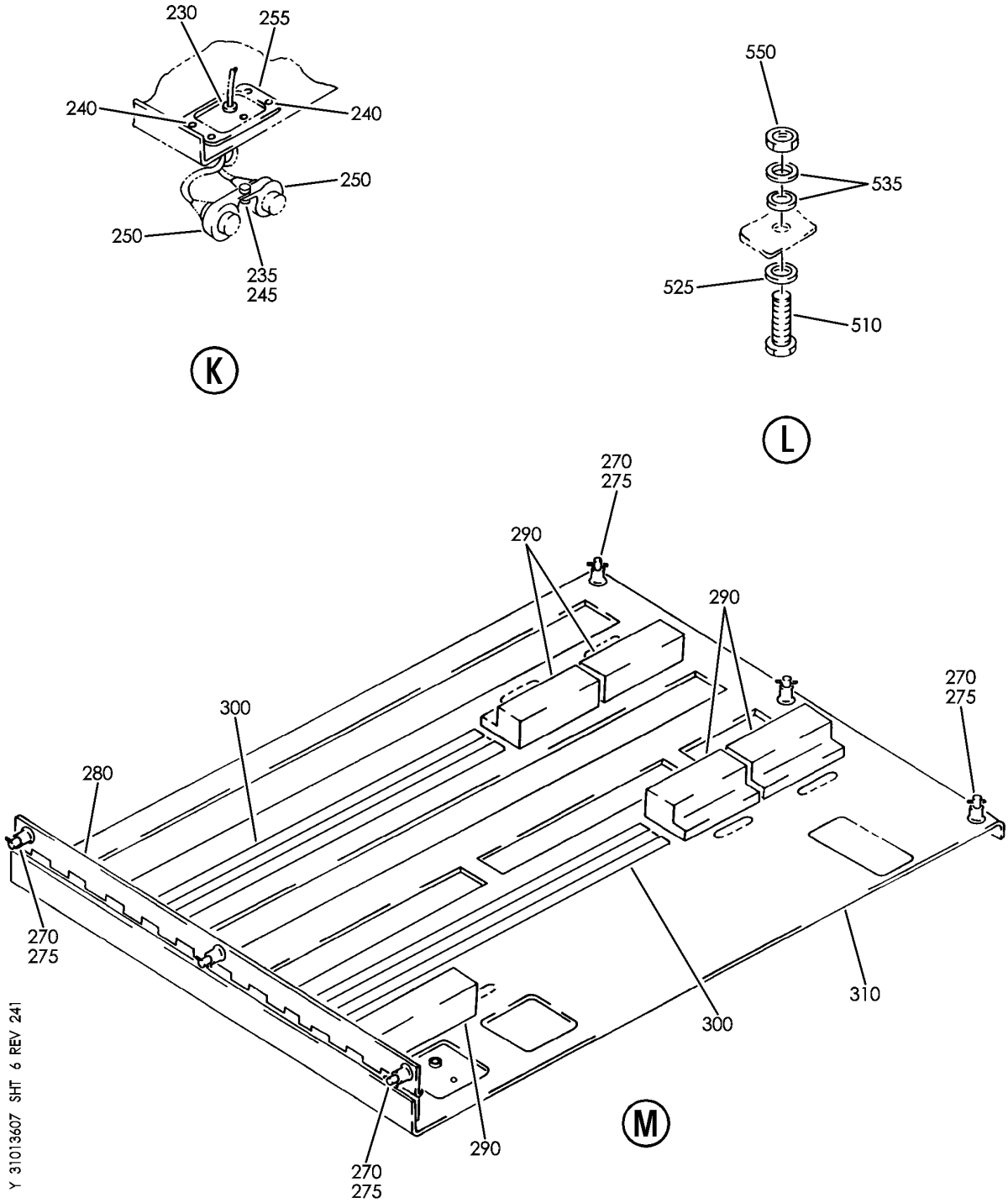

PANEL ASSY-P36 MISC RELAY (INDICATING/RECORDING SYSTEMS ONLY)
FIGURE 7 (SHEET 6)

BOEING PROPRIETARY - Copyright © - Unpublished Work - See title page for details.

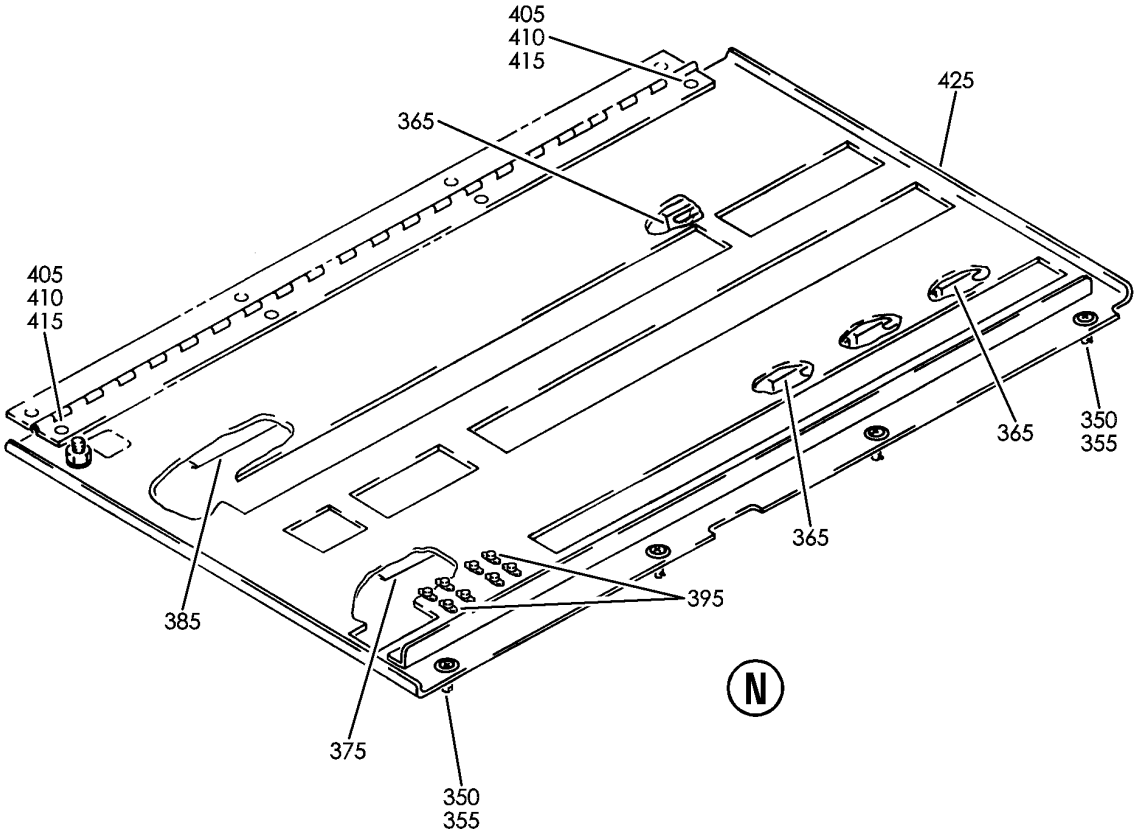

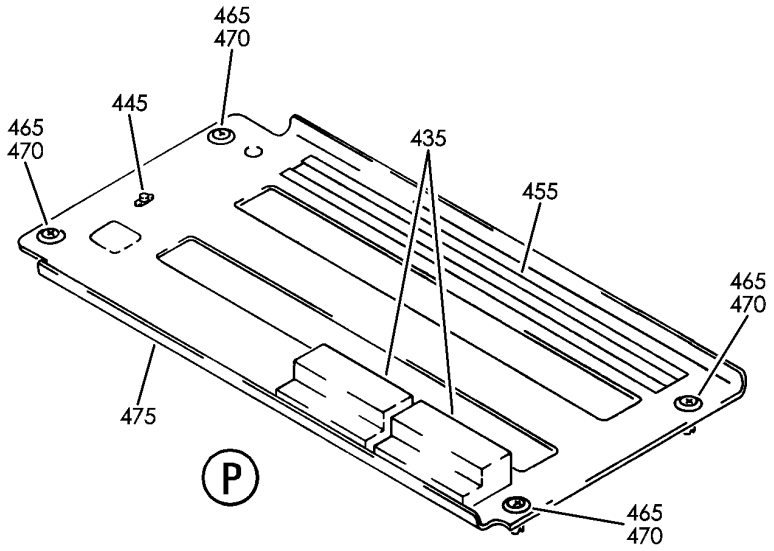

Y 31013607 SHT 7 REV 241

PANEL ASSY-P36 MISC RELAY (INDICATING/RECORDING SYSTEMS ONLY)
FIGURE 7 (SHEET 7)

BOEING PROPRIETARY - Copyright © - Unpublished Work - See title page for details.

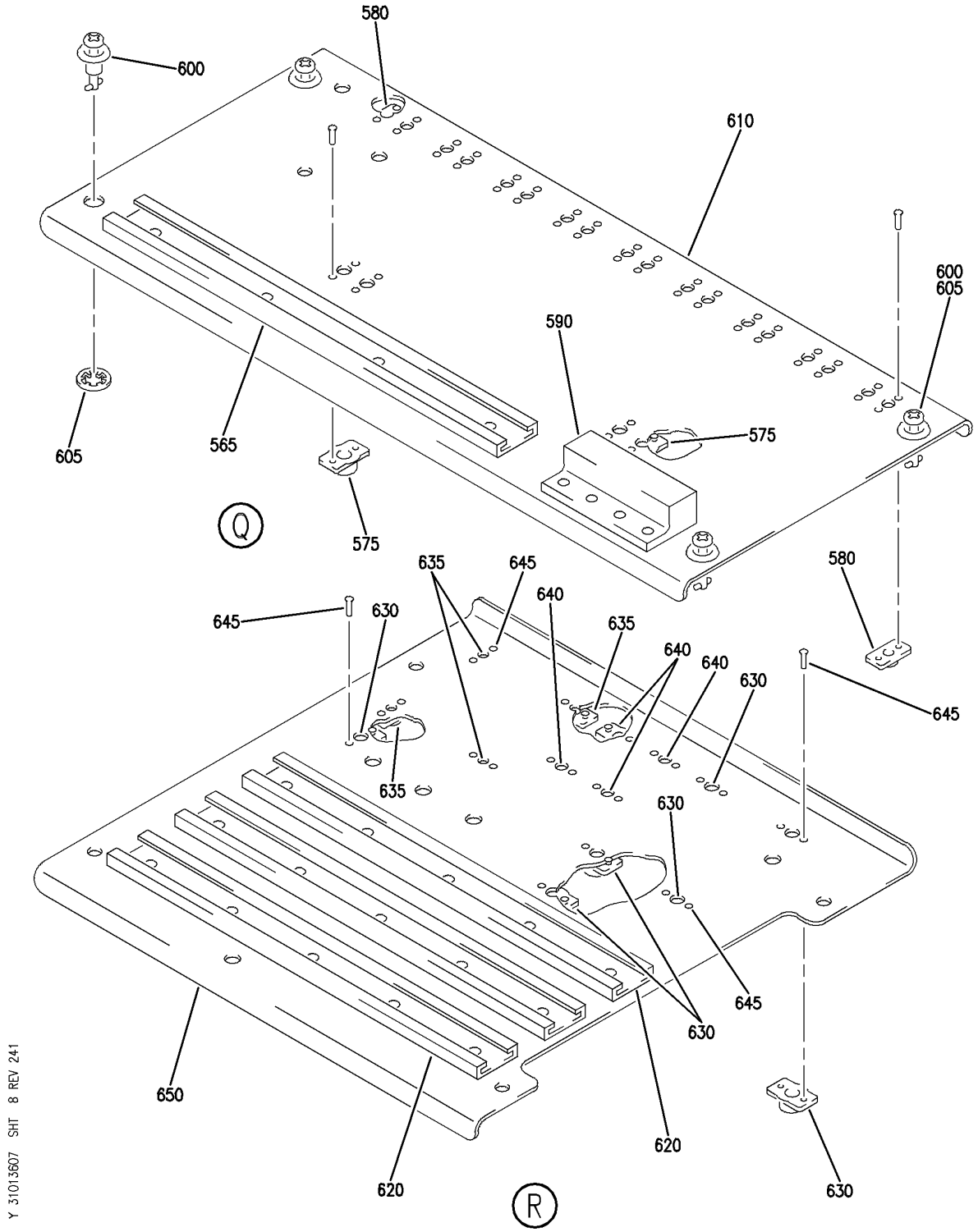

PANEL ASSY-P36 MISC RELAY (INDICATING/RECORDING SYSTEMS ONLY)
FIGURE 7 (SHEET 8)

BOEING PROPRIETARY - Copyright © - Unpublished Work - See title page for details.

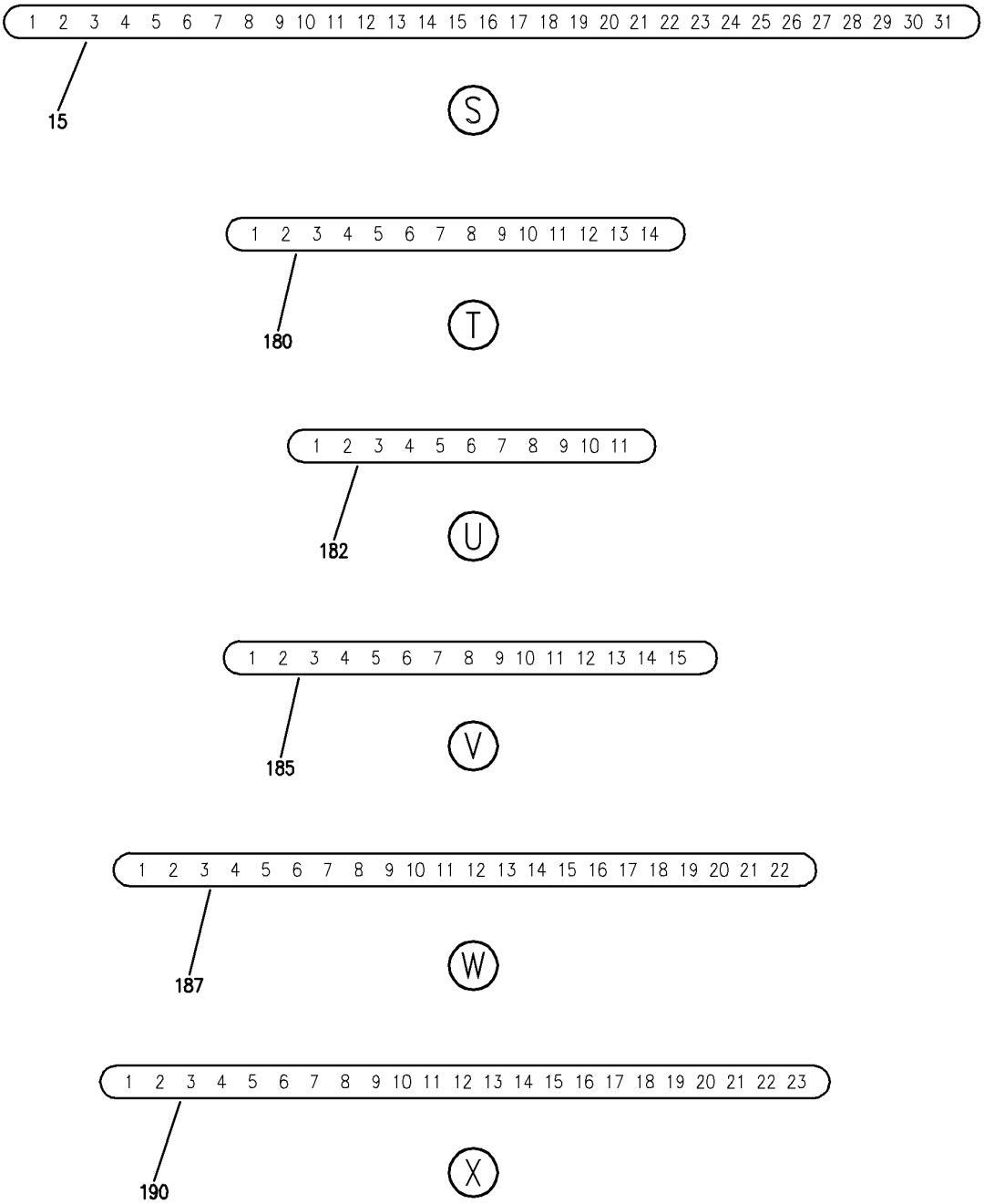

Y 31013607 SHT 9 REV 241

PANEL ASSY-P36 MISC RELAY (INDICATING/RECORDING SYSTEMS ONLY)
FIGURE 7 (SHEET 9)

BOEING PROPRIETARY - Copyright © - Unpublished Work - See title page for details.

FIG ITEM	PART NUMBER	1 2 3 4 5 6 7 NOMENCLATURE	EFFECT FROM TO	UNITS PER ASSY
7				
		PANEL ASSY-P36 MISC RELAY (INDICATING/RECORDING SYSTEMS ONLY)	002004 006100 107107 121503 904999	
- 1	284N1125-1	PANEL ASSY-P36 MISC RELAY (INDICATING/RECORDING SYSTEMS ONLY) POSITION DATA: LH VARIABLE DRAWING REF: 284N1125-5023 284N1125-5030 284N1125-5049 284N1125-5050 284N1125-5054 REWORKED BY SB: 28-0035 34-0200 REWORKED BY ALERT SB: 27A0130 FOR NHA/OTHER SYS DET SEE: 31-01-36-01B	002004 006100 107107 121503 904999	RF
5	BAC27NEX0173	.DECAL- PLACARD CONTENT: A	002004 006100 107107 121503 904999	1
10	BAC27NEX1732	.DECAL- PLACARD CONTENT: TB360	002004 006100 107107 121503 904999	1
15	BAC27NEX0933	.DECAL- PLACARD CONTENT: 1-31	002004 006100 107107 121503 904999	2
20	BAC27NEX1733	.DECAL- PLACARD CONTENT: TB361	002004 006100 107107 121503 904999	1
25	BAC27NEX0924	.DECAL- PLACARD CONTENT: GD1674	002004 006100 107107 121503 904999	1

MISSING ITEM NUMBERS NOT APPLICABLE

- ITEM NOT ILLUSTRATED

BOEING PROPRIETARY - Copyright © - Unpublished Work - See title page for details.

FIG ITEM	PART NUMBER	1 2 3 4 5 6 7 NOMENCLATURE	EFFECT FROM TO	UNITS PER ASSY
7				
30	BAC27NEX1734	.DECAL- PLACARD CONTENT: TB362	002004 006100 107107 121503 904999	1
35	BAC27TEX1476	.DECAL- PLACARD CONTENT: TB161	002004 006100 107107 121503 904999	1
40	BAC27NEX0922	.DECAL- PLACARD CONTENT: GD1672	002004 006100 107107 121503 904999	1
45	BAC27NEX0923	.DECAL- PLACARD CONTENT: GD1673	002004 006100 107107 121503 904999	1
50	BAC27NEX0916	.DECAL- PLACARD CONTENT: TB160	002004 006100 107107 121503 904999	1
55	BAC27NEX0920	.DECAL- PLACARD CONTENT: GD1670	002004 006100 107107 121503 904999	1
60	BAC27NEX0921	.DECAL- PLACARD CONTENT: GD1671	002004 006100 107107 121503 904999	1
65	BAC27NEX0176	.DECAL- PLACARD CONTENT: D	002004 006100 107107 121503 904999	1
70	BAC27NEX0248	.DECAL- PLACARD CONTENT: F	002004 006100 107107 121503 904999	1

MISSING ITEM NUMBERS NOT APPLICABLE

– ITEM NOT ILLUSTRATED

BOEING PROPRIETARY - Copyright © - Unpublished Work - See title page for details.

FIG ITEM	PART NUMBER	1 2 3 4 5 6 7 NOMENCLATURE	EFFECT FROM TO	UNITS PER ASSY
7				
75	BAC27TEX1270	.DECAL- PLACARD CONTENT: TB166	002004 006100 107107 121503 904999	1
80	BAC27NEX2103	.DECAL- PLACARD CONTENT: GD1606	002004 006100 107107 121503 904999	1
85	BAC27NEX0928	.DECAL- PLACARD CONTENT: GD1686	002004 006100 107107 121503 904999	1
90	BAC27NEX0929	.DECAL- PLACARD CONTENT: GD1687	002004 006100 107107 121503 904999	1
95	BAC27NEX0918	.DECAL- PLACARD CONTENT: TB165	002004 006100 107107 121503 904999	1
100	BAC27NEX0925	.DECAL- PLACARD CONTENT: GD1683	002004 006100 107107 121503 904999	1
105	BAC27NEX0926	.DECAL- PLACARD CONTENT: GD1684	002004 006100 107107 121503 904999	1
110	BAC27NEX0927	.DECAL- PLACARD CONTENT: GD1685	002004 006100 107107 121503 904999	1
115	BAC27NEX0917	.DECAL- PLACARD CONTENT: TB163	002004 006100 107107 121503 904999	1

MISSING ITEM NUMBERS NOT APPLICABLE

– ITEM NOT ILLUSTRATED

BOEING PROPRIETARY - Copyright © - Unpublished Work - See title page for details.

FIG ITEM	PART NUMBER	1 2 3 4 5 6 7 NOMENCLATURE	EFFECT FROM TO	UNITS PER ASSY
7				
120	BAC27NEX0931	.DECAL- PLACARD CONTENT: GD1693	002004 006100 107107 121503 904999	1
125	BAC27NEX1819	.DECAL- PLACARD CONTENT: GD2867	002004 006100 107107 121503 904999	1
130	BAC27NEX0247	.DECAL- PLACARD CONTENT: E	002004 006100 107107 121503 904999	1
135	BAC27TEX1271	.DECAL- PLACARD CONTENT: TB168	002004 006100 107107 121503 904999	1
140	BAC27NEX0930	.DECAL- PLACARD CONTENT: GD1690	002004 006100 107107 121503 904999	1
145	BAC27NEX0175	.DECAL- PLACARD CONTENT: C	002004 006100 107107 121503 904999	1
150	BAC27TEX1269	.DECAL- PLACARD CONTENT: TB164	002004 006100 107107 121503 904999	1
155	BAC27NEX0942	.DECAL- PLACARD CONTENT: GD1678	002004 006100 107107 121503 904999	1
160	BAC27NEX0941	.DECAL- PLACARD CONTENT: GD1677	002004 006100 107107 121503 904999	1

MISSING ITEM NUMBERS NOT APPLICABLE

– ITEM NOT ILLUSTRATED

BOEING PROPRIETARY - Copyright © - Unpublished Work - See title page for details.

FIG ITEM	PART NUMBER	1 2 3 4 5 6 7 NOMENCLATURE	EFFECT FROM TO	UNITS PER ASSY
7				
165	BAC27NEX1587	.DECAL- PLACARD CONTENT: GD1679	002004 006100 107107 121503 904999	1
170	BAC27NEX0174	.DECAL- PLACARD CONTENT: B	002004 006100 107107 121503 904999	1
175	BAC27NEX2420	.DECAL	002004 006100 107107 121503 904999	2
190	BAC27TEX0384	.DECAL- PLACARD CONTENT: 1-23	002004 006100 107107 121503 904999	3
195	NAS1801-4-8	.SCREW	002004 006100 107107 121503 904999	7
200	NAS1149D0416H	.WASHER	002004 006100 107107 121503 904999	24
205	MS21042L4	.NUT	002004 006100 107107 121503 904999	9
210	287N1404-13	.JUMPER ASSY	002004 006100 107107 121503 904999	2
215	287N1404-1	.JUMPER ASSY	002004 006100 107107 121503 904999	1

MISSING ITEM NUMBERS NOT APPLICABLE

— ITEM NOT ILLUSTRATED

BOEING PROPRIETARY - Copyright © - Unpublished Work - See title page for details.

FIG ITEM	PART NUMBER	1 2 3 4 5 6 7 NOMENCLATURE	EFFECT FROM TO	UNITS PER ASSY
7				
220	287N1404-10	.JUMPER ASSY	002004 006100 107107 121503 904999	2
225	287N1404-8	.JUMPER	002004 006100 107107 121503 904999	1
260	H49-2	.CLAMP SUPPLIER CODE: V34941 SPECIFICATION NUMBER: BACC49A2 OPTIONAL PART: MF104-2 V6E102	002004 006100 107107 121503 904999	20
265	284N1124-82	.PLATE ASSY	002004 006100 107107 121503 904999	1
270	BACS21Y4R	..STUD ASSY	002004 006100 107107 121503 904999	6
275	1127700	..WASHER SUPPLIER CODE: V60119 SPECIFICATION NUMBER: BACW10X4 OPTIONAL PART: 2600LW V71286	002004 006100 107107 121503 904999	6
280	284N1124-2	..HINGE	002004 006100 107107 121503 904999	1
		ATTACHING PARTS		
- 285	BACR15BA4D	..RIVET- SIZE DETERMINED ON INSTL.	002004 006100 107107 121503 904999	5
		-------*-------		

MISSING ITEM NUMBERS NOT APPLICABLE

- ITEM NOT ILLUSTRATED

BOEING PROPRIETARY - Copyright © - Unpublished Work - See title page for details.

FIG ITEM	PART NUMBER	1 2 3 4 5 6 7 NOMENCLATURE	EFFECT FROM TO	UNITS PER ASSY
7				
290	YHLZG16-1	..BLOCK-	002004	5
		SUPPLIER CODE:	006100	
		V09922	107107	
			121503	
			904999	
		ATTACHING PARTS		
- 295	BACR15BB5AD	..RIVET-	002004	20
		SIZE DETERMINED ON INSTL.	006100	
			107107	
			121503	
			904999	
		-------*-------		
300	BACT44B1030U	..TRACK	002004	2
			006100	
			107107	
			121503	
			904999	
		ATTACHING PARTS		
- 305	BACR15BA4D	..RIVET-	002004	8
		SIZE DETERMINED ON INSTL.	006100	
			107107	
			121503	
			904999	
		-------*-------		
310	284N1124-81	..PLATE	002004	1
			006100	
			107107	
			121503	
			904999	
315	NAS601-24P	.SCREW	002004	4
			006100	
			107107	
			121503	
			904999	
350	1127700	..WASHER	002004	4
		SUPPLIER CODE:	006100	
		V60119	107107	
		SPECIFICATION NUMBER:	121503	
		BACW10X4	904999	
		OPTIONAL PART:		
		2600LW		
		V71286		
355	BACS21Y4R	..STUD ASSY	002004	4
			006100	
			107107	
			121503	
			904999	

MISSING ITEM NUMBERS NOT APPLICABLE

- ITEM NOT ILLUSTRATED

BOEING PROPRIETARY - Copyright © - Unpublished Work - See title page for details.

FIG ITEM	PART NUMBER	1 2 3 4 5 6 7 NOMENCLATURE	EFFECT FROM TO	UNITS PER ASSY
7				
365	YHLZG16-1	..BLOCK-	002004	5
		SUPPLIER CODE:	006100	
		V09922	107107	
			121503	
			904999	
		ATTACHING PARTS		
- 370	BACR15BB5AD	..RIVET-	002004	20
		SIZE DETERMINED ON INSTL.	006100	
			107107	
			121503	
			904999	
		-------*-------		
375	BACT44B1060U	..TRACK	002004	1
			006100	
			107107	
			121503	
			904999	
		ATTACHING PARTS		
- 380	BACR15BB4D	..RIVET-	002004	4
		SIZE DETERMINED ON INSTL.	006100	
			107107	
			121503	
			904999	
		-------*-------		
385	AMY1300T5	..TRACK	002004	1
		SUPPLIER CODE:	006100	
		V09922	107107	
		SPECIFICATION NUMBER:	121503	
		BACT44B1300U	904999	
		ATTACHING PARTS		
- 390	BACR15BB4D	..RIVET-	002004	5
		SIZE DETERMINED ON INSTL.	006100	
			107107	
			121503	
			904999	
		-------*-------		

MISSING ITEM NUMBERS NOT APPLICABLE

- ITEM NOT ILLUSTRATED

BOEING PROPRIETARY - Copyright © - Unpublished Work - See title page for details.

FIG ITEM	PART NUMBER	1 2 3 4 5 6 7 NOMENCLATURE	EFFECT FROM TO	UNITS PER ASSY
7				
395	MF53049-06	..NUTPLATE	002004	8
		SUPPLIER CODE:	006100	
		V15653	107107	
		SPECIFICATION NUMBER:	121503	
		BACN10JN06	904999	
		OPTIONAL PART:		
		MF1000-06BAC		
		V15653		
		NS103218-62		
		V80539		
		RMF9201M62		
		V72962		
		VN252A62L		
		V92215		
		T8124S06S		
		V11815		
		BRFM20A06L		
		V52828		
		ATTACHING PARTS		
- 400	BACR15BA3AD	..RIVET-	002004	16
		SIZE DETERMINED ON INSTL.	006100	
			107107	
			121503	
			904999	
		-------*-------		
405	NAS603-7P	..SCREW	002004	4
			006100	
			107107	
			121503	
			904999	
410	NAS1149D0332J	..WASHER	002004	4
			006100	
			107107	
			121503	
			904999	
415	F171-3	..NUTPLATE	002004	4
		SUPPLIER CODE:	006100	
		V72962	107107	
		SPECIFICATION NUMBER:	121503	
		BACN10JB3	904999	
		OPTIONAL PART:		
		43600-02		
		V80539		
		BRF210A3		
		V52828		
		BRF270A3		
		V52828		

MISSING ITEM NUMBERS NOT APPLICABLE

- ITEM NOT ILLUSTRATED

BOEING PROPRIETARY - Copyright © - Unpublished Work - See title page for details.

FIG ITEM	PART NUMBER	1 2 3 4 5 6 7 NOMENCLATURE	EFFECT FROM TO	UNITS PER ASSY
7				
		ATTACHING PARTS		
- 420	BACR15BA3AD	..RIVET-	002004	8
		SIZE DETERMINED ON INSTL.	006100	
			107107	
			121503	
			904999	
		-------*-------		
430	284N1124-72	.PLATE ASSY	002004	1
			006100	
			107107	
			121503	
			904999	
435	YHLZG16-1	..BLOCK-	002004	2
		SUPPLIER CODE:	006100	
		V09922	107107	
			121503	
			904999	
		ATTACHING PARTS		
- 440	BACR15BB5AD	..RIVET-	002004	8
		SIZE DETERMINED ON INSTL.	006100	
			107107	
			121503	
			904999	
		-------*-------		
445	WS14A10	..NUTPLATE	002004	1
		SUPPLIER CODE:	006100	
		V04169	107107	
		SPECIFICATION NUMBER:	121503	
		BACN10TL3A10	904999	
		ATTACHING PARTS		
- 450	BACR15BA4AD	..RIVET-	002004	2
		SIZE DETERMINED ON INSTL.	006100	
			107107	
			121503	
			904999	
		-------*-------		
455	BACT44B1000U	..TRACK	002004	1
			006100	
			107107	
			121503	
			904999	
		ATTACHING PARTS		
- 460	BACR15BA4D	..RIVET	002004	7
			006100	
			107107	
			121503	
			904999	
		-------*-------		

MISSING ITEM NUMBERS NOT APPLICABLE

- ITEM NOT ILLUSTRATED

BOEING PROPRIETARY - Copyright © - Unpublished Work - See title page for details.

FIG ITEM	PART NUMBER	1 2 3 4 5 6 7 NOMENCLATURE	EFFECT FROM TO	UNITS PER ASSY
7				
465	1127700	..WASHER SUPPLIER CODE: V60119 SPECIFICATION NUMBER: BACW10X4 OPTIONAL PART: 2600LW V71286	002004 006100 107107 121503 904999	4
470	BACS21Y4R	..STUD ASSY	002004 006100 107107 121503 904999	4
475	284N1124-73	..PLATE	002004 006100 107107 121503 904999	1
495	NAS1801-3-7	.SCREW	002004 006100 107107 121503 904999	10
500	NAS1801-08-6	.SCREW	002004 006100 107107 121503 904999	4
505	NAS1801-06-6	.SCREW	002004 006100 107107 121503 904999	4
510	NAS1801-4-12	.SCREW	002004 006100 107107 121503 904999	4
515	NAS603-7P	.SCREW	002004 006100 107107 121503 904999	4
520	NAS601-6P	.SCREW	002004 006100 107107 121503 904999	2

MISSING ITEM NUMBERS NOT APPLICABLE

– ITEM NOT ILLUSTRATED

BOEING PROPRIETARY - Copyright © - Unpublished Work - See title page for details.

FIG ITEM	PART NUMBER	1 2 3 4 5 6 7 NOMENCLATURE	EFFECT FROM TO	UNITS PER ASSY
7				
525	MS35338-44	.WASHER	002004 006100 107107 121503 904999	4
530	NAS1149DN616H	.WASHER	002004 006100 107107 121503 904999	22
540	NAS1149DN616H	.WASHER	002004 006100 107107 121503 904999	8
545	NAS1149D0416J	.WASHER	002004 006100 107107 121503 904999	8
550	MS35650-3255T	.NUT	002004 006100 107107 121503 904999	4
555	66-22661-1	.BARRIER	002004 006100 107107 121503 904999	2
560	284N1124-78	.PLATE ASSY	002004 006100 107107 121503 904999	1
565	BACT44B0850U	..TRACK	002004 006100 107107 121503 904999	1
		ATTACHING PARTS		
- 570	BACR15BA4AD	..RIVET	002004 006100 107107 121503 904999	4
		-------*-------		

MISSING ITEM NUMBERS NOT APPLICABLE

- ITEM NOT ILLUSTRATED

BOEING PROPRIETARY - Copyright © - Unpublished Work - See title page for details.

FIG ITEM	PART NUMBER	1 2 3 4 5 6 7 NOMENCLATURE	EFFECT FROM TO	UNITS PER ASSY
7				
575	MF53049-3	..NUTPLATE SUPPLIER CODE: V15653 SPECIFICATION NUMBER: BACN10JN3 OPTIONAL PART: BRFM20A3 V52828 MF1000-3BAC V15653 NS103218-02 V80539 RMF9201M3 V72962 VN252A02 V92215 T8124S3S V11815	002004 006100 107107 121503 904999	4
580	MF53049-06	..NUTPLATE SUPPLIER CODE: V15653 SPECIFICATION NUMBER: BACN10JN06 OPTIONAL PART: MF1000-06BAC V15653 NS103218-62 V80539 RMF9201M62 V72962 VN252A62L V92215 T8124S06S V11815 BRFM20A06L V52828 ATTACHING PARTS	002004 006100 107107 121503 904999	18
- 585	BACR15BA3AD	..RIVET- SIZE DETERMINED ON INSTL. -------*-------	002004 006100 107107 121503 904999	44
590	YHLZG16-1	..BLOCK- SUPPLIER CODE: V09922	002004 006100 107107 121503 904999	1

MISSING ITEM NUMBERS NOT APPLICABLE

- ITEM NOT ILLUSTRATED

BOEING PROPRIETARY - Copyright © - Unpublished Work - See title page for details.

FIG ITEM	PART NUMBER	1 2 3 4 5 6 7 NOMENCLATURE	EFFECT FROM TO	UNITS PER ASSY
7				
		ATTACHING PARTS		
- 595	BACR15BB5AD	..RIVET-	002004	4
		SIZE DETERMINED ON INSTL.	006100	
			107107	
			121503	
			904999	
		-------*-------		
600	1127700	..WASHER	002004	4
		SUPPLIER CODE:	006100	
		V60119	107107	
		SPECIFICATION NUMBER:	121503	
		BACW10X4	904999	
		OPTIONAL PART:		
		2600LW		
		V71286		
605	BACS21Y4R	..STUD ASSY	002004	4
			006100	
			107107	
			121503	
			904999	
610	284N1124-79	..PLATE	002004	1
			006100	
			107107	
			121503	
			904999	
615	284N1124-74	.PLATE ASSY	002004	1
			006100	
			107107	
			121503	
			904999	
620	AMY0800T5	..TRACK	002004	3
		SUPPLIER CODE:	006100	
		V09922	107107	
		SPECIFICATION NUMBER:	121503	
		BACT44B0800U	904999	
		ATTACHING PARTS		
- 625	BACR15BB4D	..RIVET-	002004	15
		SIZE DETERMINED ON INSTL.	006100	
			107107	
			121503	
			904999	
		-------*-------		

MISSING ITEM NUMBERS NOT APPLICABLE

- ITEM NOT ILLUSTRATED

BOEING PROPRIETARY - Copyright © - Unpublished Work - See title page for details.

FIG ITEM	PART NUMBER	1 2 3 4 5 6 7 NOMENCLATURE	EFFECT FROM TO	UNITS PER ASSY
7				
630	MF53049-3	..NUTPLATE	002004	6
		SUPPLIER CODE:	006100	
		V15653	107107	
		SPECIFICATION NUMBER:	121503	
		BACN10JN3	904999	
		OPTIONAL PART:		
		BRFM20A3		
		V52828		
		MF1000-3BAC		
		V15653		
		NS103218-02		
		V80539		
		RMF9201M3		
		V72962		
		VN252A02		
		V92215		
		T8124S3S		
		V11815		
635	MF53049-06	..NUTPLATE	002004	4
		SUPPLIER CODE:	006100	
		V15653	107107	
		SPECIFICATION NUMBER:	121503	
		BACN10JN06	904999	
		OPTIONAL PART:		
		MF1000-06BAC		
		V15653		
		NS103218-62		
		V80539		
		RMF9201M62		
		V72962		
		VN252A62L		
		V92215		
		T8124S06S		
		V11815		
		BRFM20A06L		
		V52828		

MISSING ITEM NUMBERS NOT APPLICABLE

– ITEM NOT ILLUSTRATED

BOEING PROPRIETARY - Copyright © - Unpublished Work - See title page for details.

FIG ITEM	PART NUMBER	1 2 3 4 5 6 7 NOMENCLATURE	EFFECT FROM TO	UNITS PER ASSY
7				
640	MF53049-08	..NUT SUPPLIER CODE: V15653 SPECIFICATION NUMBER: BACN10JN08 OPTIONAL PART: BRFM20A08 V52828 MF1000-08BAC V15653 NS103218-82 V80539 RMF9201M82 V72962 VN252A82 V92215 T8124S08S V11815	002004 006100 107107 121503 904999	4
645	BACR15BA3AD	..RIVET- SIZE DETERMINED ON INSTL.	002004 006100 107107 121503 904999	28
650	284N1124-75	..PLATE ASSY-MTG	002004 006100 107107 121503 904999	1
655	13331000-4	.ENCLOSURE ASSY- SUPPLIER CODE: V23296	002004 006100 107107 121503 904999	1
- 720	YHLZD33	.TERMINAL- SUPPLIER CODE: V09922 ELECTRICAL EQUIP NUMBER: R10465 POST SERVICE BULLETIN: 34-0200	952952	1

MISSING ITEM NUMBERS NOT APPLICABLE

- ITEM NOT ILLUSTRATED

BOEING PROPRIETARY - Copyright © - Unpublished Work - See title page for details.

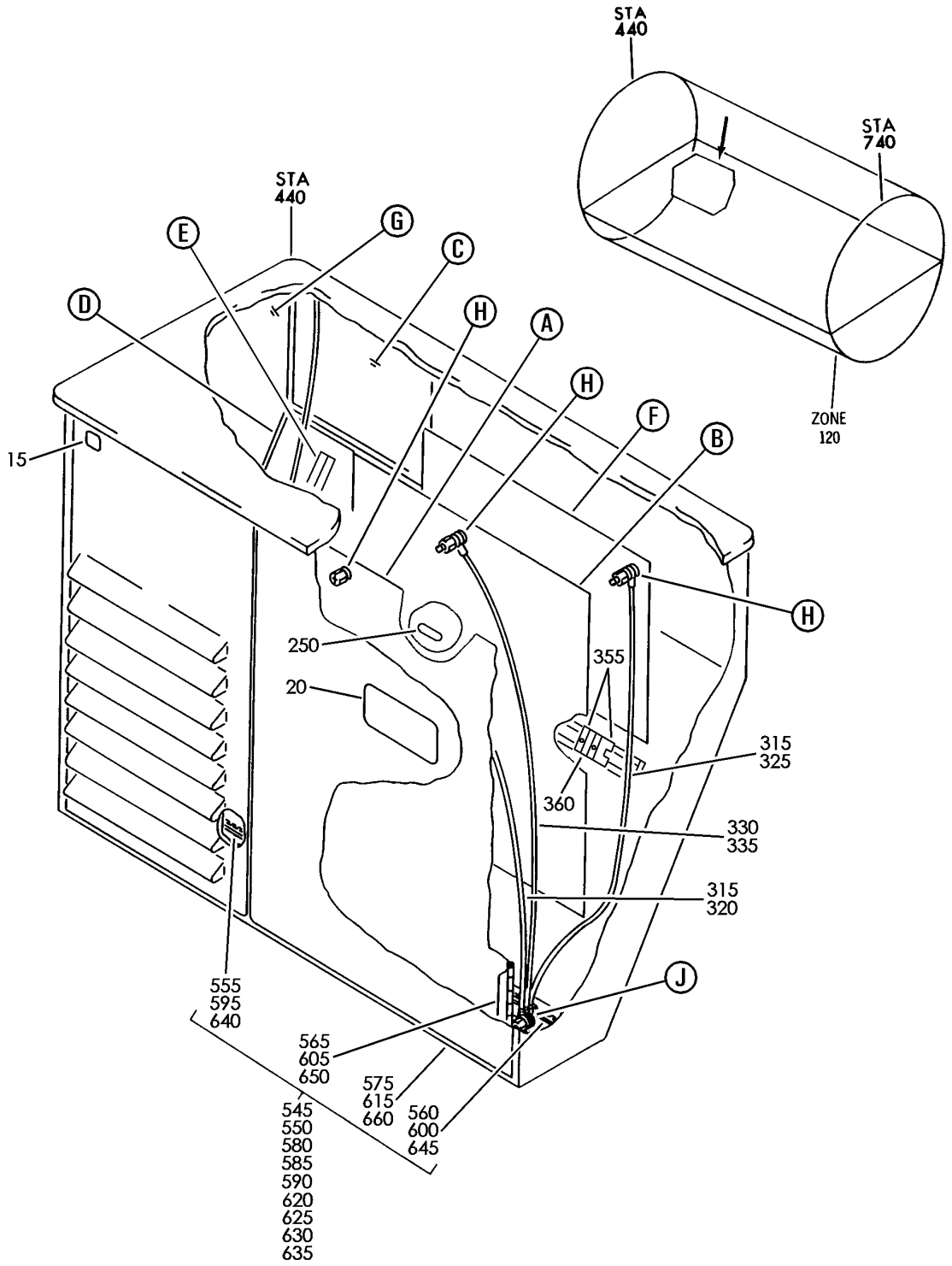

PANEL ASSY-P37 RELAY R (RIGHT MISCELLANEOUS ELECTRICAL EQUIPMENT PANEL P37 ONLY)
FIGURE 1 (SHEET 1)

BOEING PROPRIETARY - Copyright © - Unpublished Work - See title page for details.

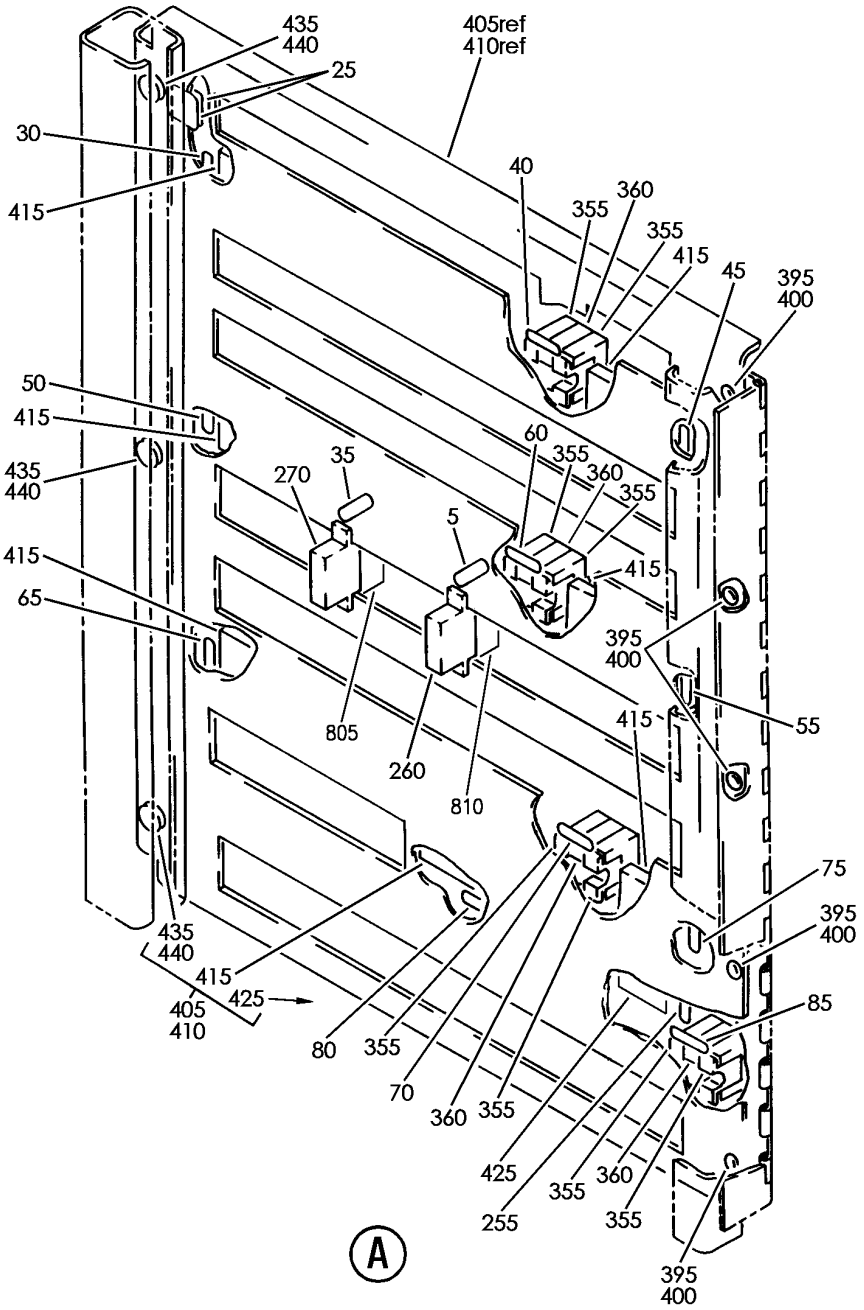

Y 31013701 SHT 2 REV 268

PANEL ASSY-P37 RELAY R (RIGHT MISCELLANEOUS ELECTRICAL EQUIPMENT PANEL P37 ONLY)
FIGURE 1 (SHEET 2)

BOEING PROPRIETARY - Copyright © - Unpublished Work - See title page for details.

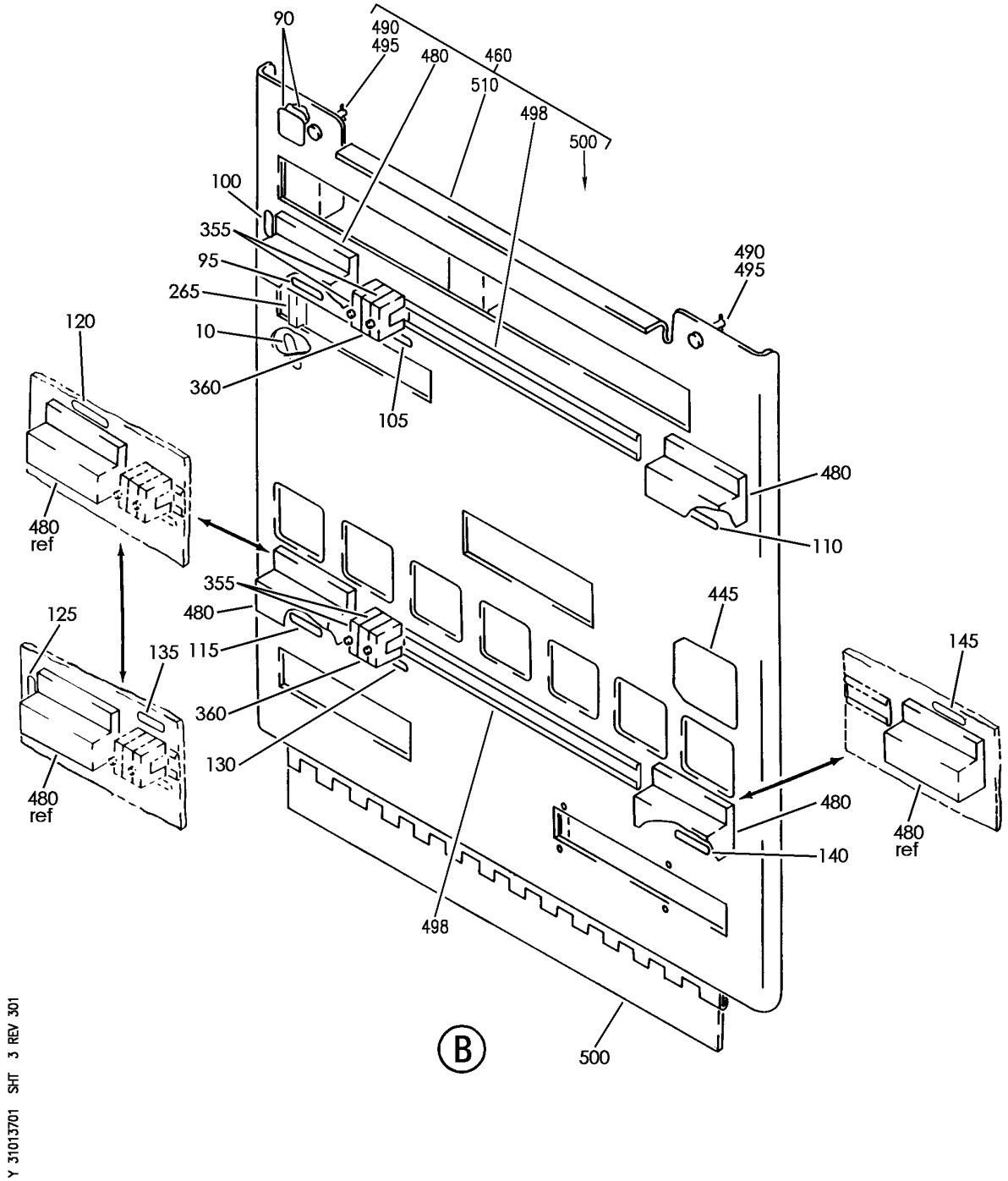

PANEL ASSY-P37 RELAY R (RIGHT MISCELLANEOUS ELECTRICAL EQUIPMENT PANEL P37 ONLY)
FIGURE 1 (SHEET 3)

BOEING PROPRIETARY - Copyright © - Unpublished Work - See title page for details.

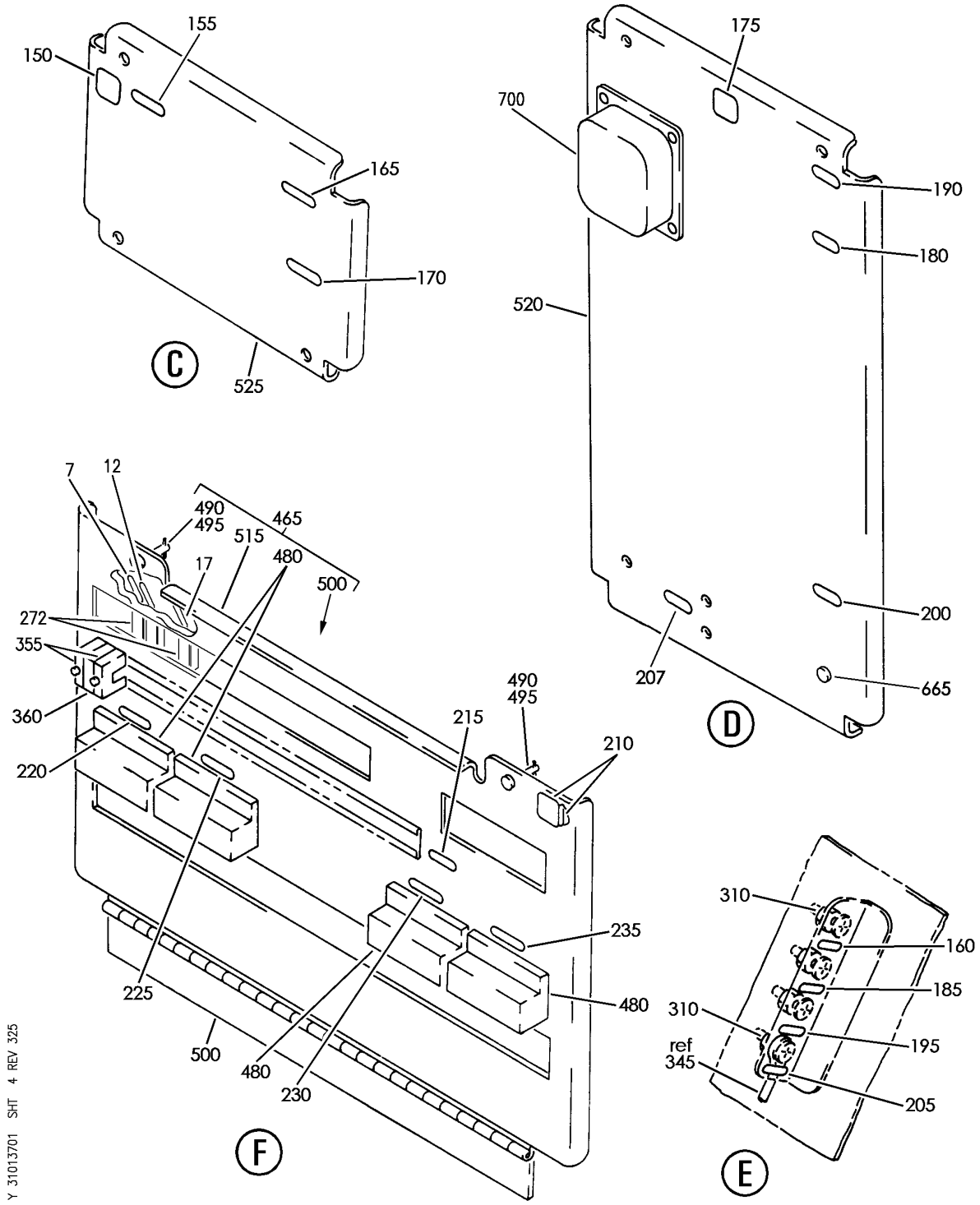

PANEL ASSY-P37 RELAY R (RIGHT MISCELLANEOUS ELECTRICAL EQUIPMENT PANEL P37 ONLY)
FIGURE 1 (SHEET 4)

BOEING PROPRIETARY - Copyright © - Unpublished Work - See title page for details.

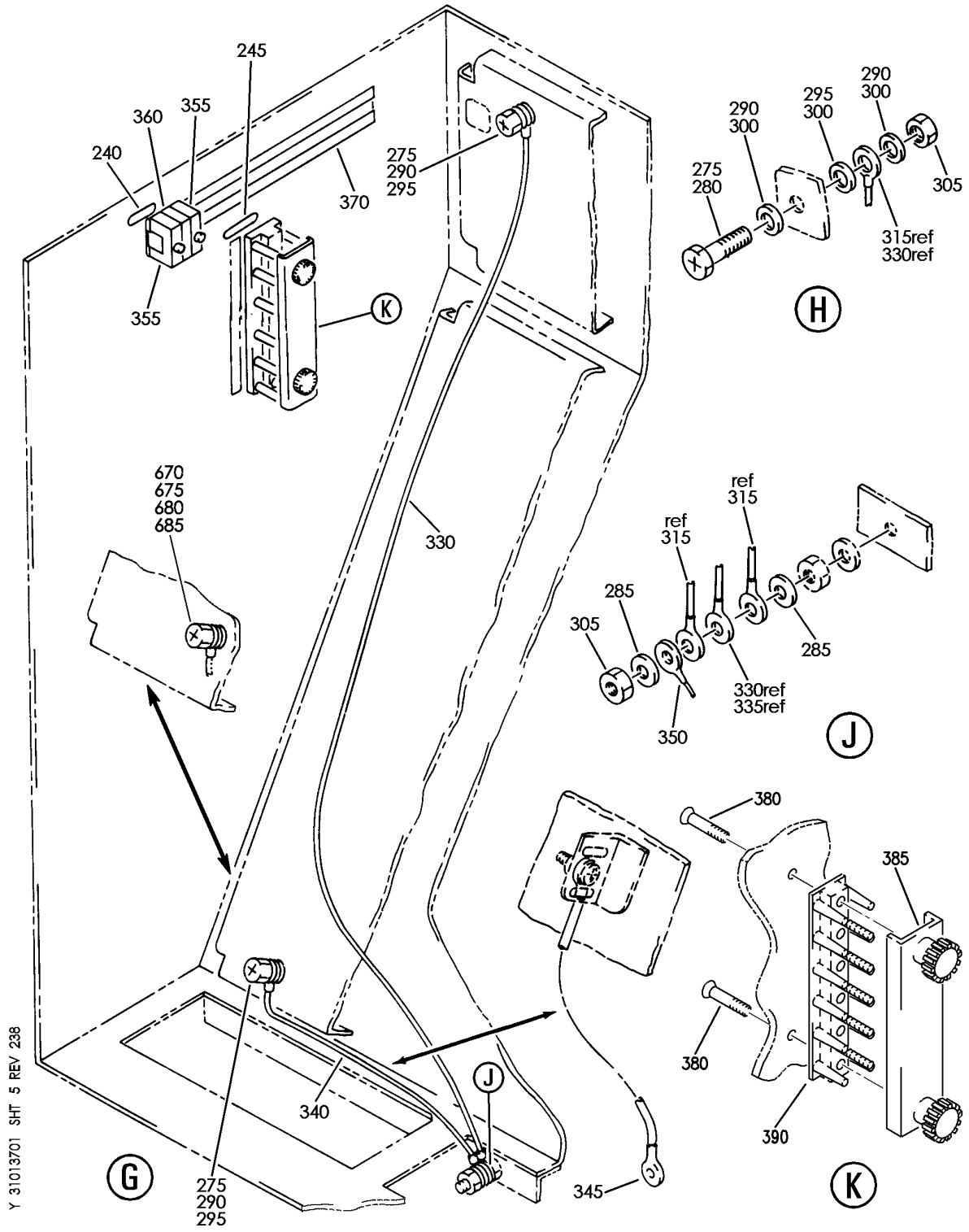

PANEL ASSY-P37 RELAY R (RIGHT MISCELLANEOUS ELECTRICAL EQUIPMENT PANEL P37 ONLY)
FIGURE 1 (SHEET 5)

BOEING PROPRIETARY - Copyright © - Unpublished Work - See title page for details.

FIG ITEM	PART NUMBER	1 2 3 4 5 6 7 NOMENCLATURE	EFFECT FROM TO	UNITS PER ASSY
1				
		PANEL ASSY-P37 RELAY R (RIGHT MISCELLANEOUS ELECTRICAL EQUIPMENT PANEL P37 ONLY)	002004 006100 107107 121503 904999	
- 1	284N1127-1	PANEL ASSY-P37 RELAY (RIGHT MISCELLANEOUS ELECTRICAL EQUIPMENT PANEL P37 ONLY) POSITION DATA: R VARIABLE DRAWING REF: 284N1127-5039 284N1127-5063 284N1127-5064 284N1127-5068 REWORKED BY SB: 33-0039 34-0200 REWORKED BY ALERT SB: 27A0130 FOR NHA/OTHER SYS DET SEE: 31-01-37-01B	002004 006100 107107 121503 904999	RF
7	BAC27NEX2384	.DECAL- PLACARD CONTENT: K02066 POST SERVICE BULLETIN: 34-0414	107107	1
10	BAC27NEX2664	.DECAL- PLACARD CONTENT: K10598	002004 006100 121503 950999	1
12	BAC27NEX2386	.DECAL- PLACARD CONTENT: K02068 POST SERVICE BULLETIN: 34-0414	107107	1
15	BAC27NEX0176	.DECAL- PLACARD CONTENT: D	002004 006100 107107 121503 904999	1
17	BAC27NEX2387	.DECAL- PLACARD CONTENT: K02069 POST SERVICE BULLETIN: 34-0414	107107	1

MISSING ITEM NUMBERS NOT APPLICABLE

- ITEM NOT ILLUSTRATED

BOEING PROPRIETARY - Copyright © - Unpublished Work - See title page for details.

FIG ITEM	PART NUMBER	1 2 3 4 5 6 7 NOMENCLATURE	EFFECT FROM TO	UNITS PER ASSY
1				
20	BAC27NEX2344	.DECAL- OPTIONAL PART: BAC27TEX0107	002004 006100 107107 121503 904999	1
20	BAC27TEX0107	.DECAL- OPTIONAL PART: BAC27NEX2344	002004 006100 107107 121503 904999	1
25	BAC27NEX0173	.DECAL- PLACARD CONTENT: A	002004 006100 107107 121503 904999	2
30	BAC27NEX1051	.DECAL- PLACARD CONTENT: GD1700	002004 006100 107107 121503 904999	1
35	BAC27NEX2141	.DECAL- PLACARD CONTENT: K10575 POST SERVICE BULLETIN: 24-0048 PRE SERVICE BULLETIN: 78-0032	002004 107107 121503 904949 952952	1
40	BAC27NEX1066	.DECAL- PLACARD CONTENT: TB170	002004 006100 107107 121503 904999	1
45	BAC27NEX1052	.DECAL	002004 006100 107107 121503 904999	1
50	BAC27NEX1053	.DECAL- PLACARD CONTENT: GD1702	002004 006100 107107 121503 904999	1
55	BAC27NEX1054	.DECAL- PLACARD CONTENT: GD1703	002004 006100 107107 121503 904999	1

MISSING ITEM NUMBERS NOT APPLICABLE

– ITEM NOT ILLUSTRATED

BOEING PROPRIETARY - Copyright © - Unpublished Work - See title page for details.

FIG ITEM	PART NUMBER	1 2 3 4 5 6 7 NOMENCLATURE	EFFECT FROM TO	UNITS PER ASSY
1				
60	BAC27NEX1067	.DECAL- PLACARD CONTENT: TB171	002004 006100 107107 121503 904999	1
65	BAC27NEX1055	.DECAL- PLACARD CONTENT: GD1704	002004 006100 107107 121503 904999	1
70	BAC27NEX1068	.DECAL- PLACARD CONTENT: TB0179	002004 006100 107107 121503 904999	1
75	BAC27NEX1056	.DECAL- PLACARD CONTENT: GD1705	002004 006100 107107 121503 904999	1
80	BAC27NEX1057	.DECAL- PLACARD CONTENT: GD1706	002004 006100 107107 121503 904999	1
85	BAC27NEX1069	.DECAL- PLACARD CONTENT: TB0180	002004 006100 107107 121503 904999	1
90	BAC27NEX0174	.DECAL- PLACARD CONTENT: B	002004 006100 107107 121503 904999	2
95	BAC27NEX1059	.DECAL- PLACARD CONTENT: GD1709	107107 121503 904949	1
100	BAC27NEX1059	.DECAL- PLACARD CONTENT: GD1709	002004 006100 950999	1
105	BAC27NEX1070	.DECAL- PLACARD CONTENT: TB172	002004 006100 107107 121503 904999	1

MISSING ITEM NUMBERS NOT APPLICABLE

– ITEM NOT ILLUSTRATED

BOEING PROPRIETARY - Copyright © - Unpublished Work - See title page for details.

FIG ITEM	PART NUMBER	1 2 3 4 5 6 7 NOMENCLATURE	EFFECT FROM TO	UNITS PER ASSY
1				
110	BAC27NEX1058	.DECAL- PLACARD CONTENT: GD1708	002004 006100 107107 121503 904999	1
115	BAC27NEX1061	.DECAL- PLACARD CONTENT: GD1711	002004 006100 107107 121503 904999	1
130	BAC27NEX1071	.DECAL- PLACARD CONTENT: TB173	002004 006100 107107 121503 904999	1
140	BAC27NEX1060	.DECAL- PLACARD CONTENT: GD1710	002004 006100 107107 121503 904999	1
145	BAC27NEX1060	.DECAL- PLACARD CONTENT: GD1710	002004 006100 107107 121503 904999	1
150	BAC27NEX0248	.DECAL- PLACARD CONTENT: F	002004 006100 107107 121503 904999	1
160	BAC27NEX1077	.DECAL- PLACARD CONTENT: GD1721	002004 006100 107107 121503 904999	1
175	BAC27NEX0247	.DECAL- PLACARD CONTENT: E	002004 006100 107107 121503 904999	1
185	BAC27NEX1076	.DECAL- PLACARD CONTENT: GD1716	002004 006100 107107 121503 904999	1

MISSING ITEM NUMBERS NOT APPLICABLE

– ITEM NOT ILLUSTRATED

BOEING PROPRIETARY - Copyright © - Unpublished Work - See title page for details.

FIG ITEM	PART NUMBER	1 2 3 4 5 6 7 NOMENCLATURE	EFFECT FROM TO	UNITS PER ASSY
1				
195	BAC27NEX1075	.DECAL- PLACARD CONTENT: GD1717	002004 006100 107107 121503 904999	1
205	BAC27NEX1074	.DECAL- PLACARD CONTENT: GD1718	002004 006100 107107 121503 904999	1
210	BAC27NEX0175	.DECAL- PLACARD CONTENT: C	002004 006100 107107 121503 904999	2
215	BAC27NEX1072	.DECAL- PLACARD CONTENT: TB174	002004 006100 107107 121503 904999	1
220	BAC27NEX1062	.DECAL- PLACARD CONTENT: GD1712	002004 006100 107107 121503 904999	1
225	BAC27NEX1063	.DECAL- PLACARD CONTENT: GD1713	002004 006100 107107 121503 904999	1
230	BAC27NEX1064	.DECAL- PLACARD CONTENT: GD1714	002004 006100 107107 121503 904999	1
235	BAC27NEX1065	.DECAL- PLACARD CONTENT: GD1715	002004 006100 107107 121503 904999	1
240	BAC27NEX1031	.DECAL- PLACARD CONTENT: TB177	002004 006100 107107 121503 904999	1

MISSING ITEM NUMBERS NOT APPLICABLE

– ITEM NOT ILLUSTRATED

BOEING PROPRIETARY - Copyright © - Unpublished Work - See title page for details.

FIG ITEM	PART NUMBER	1 2 3 4 5 6 7 NOMENCLATURE	EFFECT FROM TO	UNITS PER ASSY
1				
250	BAC27NEX1032	.DECAL-	002004	1
		PLACARD CONTENT:	006100	
		TB178	107107	
			121503	
			904999	
255	BAC27NEX2751	.DECAL-	006100	1
		PLACARD CONTENT:	950951	
		GD3447	953999	
265	JAD9F007	.RELAY-	002004	1
		SUPPLIER CODE:	006100	
		V58657	121503	
		SPECIFICATION NUMBER:	950999	
		BACR13CJ2		
		ELECTRICAL EQUIP NUMBER:		
		K10598		
270	E210-1631	.RELAY-	002004	1
		SUPPLIER CODE:	107107	
		V99699	121503	
		SPECIFICATION NUMBER:	904949	
		BACR13CF2A	952952	
		OPTIONAL PART:		
		BR246S0112		
		V56623		
		FCA210-70		
		V78290		
		E215-1050		
		V99699		
		JD4A017		
		V35344		
		BR64S104		
		V56623		
		61GB19-1A320		
		V98927		
		ELECTRICAL EQUIP NUMBER:		
		K10575		
		POST SERVICE BULLETIN:		
		24-0048		
		PRE SERVICE BULLETIN:		
		78-0032		

MISSING ITEM NUMBERS NOT APPLICABLE

– ITEM NOT ILLUSTRATED

BOEING PROPRIETARY - Copyright © - Unpublished Work - See title page for details.

FIG ITEM	PART NUMBER	1 2 3 4 5 6 7 NOMENCLATURE	EFFECT FROM TO	UNITS PER ASSY
1				
272	W260F4AM11	.RELAY- SUPPLIER CODE: VF0219 SPECIFICATION NUMBER: BACR13CD2 OPTIONAL PART: BR16S233 V09026 EE4AA005 V35344 3SAV1338A2 V01526 HFW1206K03 V58614 HFW1204K01 V71482 ELECTRICAL EQUIP NUMBER: K02066 K02068 K02069 POST SERVICE BULLETIN: 34-0414	107107	3
280	NAS1801-4-8	.SCREW	002004 006100 107107 121503 904999	3
285	AN960PD416	.WASHER	002004 006100 107107 121503 904999	4
300	AN960PD416L	.WASHER	002004 006100 107107 121503 904999	6
305	MS21042L4	.NUT	002004 006100 950999	5

MISSING ITEM NUMBERS NOT APPLICABLE

– ITEM NOT ILLUSTRATED

BOEING PROPRIETARY - Copyright © - Unpublished Work - See title page for details.

FIG ITEM	PART NUMBER	1 2 3 4 5 6 7 NOMENCLATURE	EFFECT FROM TO	UNITS PER ASSY
1				
305	BRH10A4	.NUT	107107	5
		SUPPLIER CODE:	121503	
		V52828	904949	
		SPECIFICATION NUMBER:		
		BACN10JC4		
		OPTIONAL PART:		
		T6S428J		
		V11815		
		96-048		
		V80539		
		VN303A048		
		V92215		
		RMLH9075-4W		
		V72962		
		NS202101-048		
		V80539		
		H10-4BAC		
		V15653		
310	MS21042L4	.NUT	002004	4
			006100	
			107107	
			121503	
			904999	
320	287N1404-9	.JUMPER ASSY	002004	1
			006100	
			107107	
			121503	
			904999	
325	287N1404-22	.JUMPER ASSY	002004	1
			006100	
			107107	
			121503	
			904999	
335	287N1404-12	.JUMPER ASSY	002004	1
			006100	
			107107	
			121503	
			904999	
345	287N1404-23	.JUMPER ASSY	002004	1
			006100	
			107107	
			121503	
			904999	

MISSING ITEM NUMBERS NOT APPLICABLE

– ITEM NOT ILLUSTRATED

BOEING PROPRIETARY - Copyright © - Unpublished Work - See title page for details.

FIG ITEM	PART NUMBER	1 2 3 4 5 6 7 NOMENCLATURE	EFFECT FROM TO	UNITS PER ASSY
1				
350	RBEJ40E20-24	.JUMPER SUPPLIER CODE: V1GK47 SPECIFICATION NUMBER: BACJ40E20-24 OPTIONAL PART: 740E20-24 V91812	002004 006100 107107 121503 904999	2
355	BACC49A1	.CLAMP SUPPLIER CODE: V09922 SPECIFICATION NUMBER: BACC49A1 OPTIONAL PART: FAB278 V15805 H28-1 V34941 UP103 V6E102	107107 121503 904949	18
355	H49-2	.CLAMP SUPPLIER CODE: V34941 SPECIFICATION NUMBER: BACC49A2 OPTIONAL PART: MF104-2 V6E102	002004 006100 950999	18
360	H21-1	.SPACER SUPPLIER CODE: V34941 SPECIFICATION NUMBER: BACS18AR1 OPTIONAL PART: FAB276A V15805 YHLZ1C2 V09922 ATTACHING PARTS	107107 121503 904949	9
- 365	NAS1398D4A	.RIVET- SIZE DETERMINED ON INSTL. -------*-------	002004 006100 107107 121503 904999	5

MISSING ITEM NUMBERS NOT APPLICABLE

- ITEM NOT ILLUSTRATED

BOEING PROPRIETARY - Copyright © - Unpublished Work - See title page for details.

FIG ITEM	PART NUMBER	1 2 3 4 5 6 7 NOMENCLATURE	EFFECT FROM TO	UNITS PER ASSY
1				
370	AMY0700T5	.TRACK	002004	1
		SUPPLIER CODE:	006100	
		V09922	107107	
		SPECIFICATION NUMBER:	121503	
		BACT44B0700U	904999	
		ATTACHING PARTS		
- 375	NAS1398D4A	.RIVET-	002004	4
		SIZE DETERMINED ON INSTL.	006100	
			107107	
			121503	
			904999	
		-------*-------		
395	NAS603-7	.SCREW	107107	5
			121503	
			904949	
395	NAS603-7P	.SCREW	002004	5
			006100	
			950999	
400	AN960D10L	.WASHER	107107	5
			121503	
			904949	
405	284N1126-34	.PLATE ASSY-MTG	002004	1
			107107	
			121503	
			904949	
			952952	
410	284N1126-46	.PLATE ASSY-MTG	006100	1
			950951	
			953999	
415	YHLZG16-1	..BLOCK-GND	002004	7
		SUPPLIER CODE:	006100	
		V09922	107107	
			121503	
			904999	
		ATTACHING PARTS		
- 420	BACR15BB5D	..RIVET-	002004	28
		SIZE DETERMINED ON INSTL.	006100	
			107107	
			121503	
			904999	
		-------*-------		
425	YHLZG16-1	..BLOCK-	006100	1
		SUPPLIER CODE:	950951	
		V09922	953999	
		ATTACHING PARTS		
- 430	BACR15BB5D	..RIVET-	006100	4
		SIZE DETERMINED ON INSTL.	950951	
			953999	
		-------*-------		

MISSING ITEM NUMBERS NOT APPLICABLE

- ITEM NOT ILLUSTRATED

BOEING PROPRIETARY - Copyright © - Unpublished Work - See title page for details.

FIG ITEM	PART NUMBER	1 2 3 4 5 6 7 NOMENCLATURE	EFFECT FROM TO	UNITS PER ASSY
1				
435	BACS21Y4R	..STUD ASSY	002004 006100 107107 121503 904999	3
440	1127700	..WASHER SUPPLIER CODE: V60119 SPECIFICATION NUMBER: BACW10X4 OPTIONAL PART: 2600LW V71286	002004 006100 107107 121503 904999	3
460	284N1126-27	.PLATE ASSY-MTG	002004 107107 121503 904949 952999	1
460	284N1126-48	.PLATE ASSY-MTG	006100 950951	1
465	284N1126-40	.PLATE ASSY-MTG	002004 006100 107107 121503 904999	1
		ATTACHING PARTS		
- 470	NAS603-7	.SCREW	002004 006100 107107 121503 904999	6
- 475	AN960D10L	.WASHER	002004 006100 107107 121503 904999	6
		-------*-------		

MISSING ITEM NUMBERS NOT APPLICABLE

- ITEM NOT ILLUSTRATED

BOEING PROPRIETARY - Copyright © - Unpublished Work - See title page for details.

FIG ITEM	PART NUMBER	1 2 3 4 5 6 7 NOMENCLATURE	EFFECT FROM TO	UNITS PER ASSY
1				
480	YHLZG16-1	..BLOCK-GND	002004	4
		SUPPLIER CODE:	006100	
		V09922	107107	
		ELECTRICAL EQUIP NUMBER:	121503	
		GD01700	904999	
		GD01701		
		GD01704		
		GD01705		
		WIRING DIAGRAM REF:		
		215812		
		215821		
		216121		
		313112		
		ATTACHING PARTS		
- 485	BACR15BB5D	..RIVET-	002004	16
		SIZE DETERMINED ON INSTL.	006100	
			107107	
			121503	
			904999	
		-------*-------		
490	BACS21Y4R	..STUD ASSY	002004	2
			006100	
			107107	
			121503	
			904999	
495	1127700	..WASHER	002004	2
		SUPPLIER CODE:	006100	
		V60119	107107	
		SPECIFICATION NUMBER:	121503	
		BACW10X4	904999	
		OPTIONAL PART:		
		2600LW		
		V71286		
498	AMY0825T5	..TRACK-	002004	2
		SUPPLIER CODE:	107107	
		V09922	121503	
		SPECIFICATION NUMBER:	904949	
		BACT44B0825U	952999	
		ELECTRICAL EQUIP NUMBER:		
		TB0170		
		WIRING DIAGRAM REF:		
		215812		
		USED ON:		
		284N1126-21		
		284N1126-27		

MISSING ITEM NUMBERS NOT APPLICABLE

- ITEM NOT ILLUSTRATED

BOEING PROPRIETARY - Copyright © - Unpublished Work - See title page for details.

FIG ITEM	PART NUMBER	1 2 3 4 5 6 7 NOMENCLATURE	EFFECT FROM TO	UNITS PER ASSY
1				
		ATTACHING PARTS		
- 499	BACR15BA4D	..RIVET-	002004	8
		SIZE DETERMINED ON INSTL.	107107	
			121503	
			904949	
			952999	
		-------*-------		
500	284N1126-11	..HINGE-	002004	1
		ALTERED FROM PART NUMBER:	006100	
		MS20001P9-1300	107107	
		MS20001P9-1300	121503	
		MANUFACTURED FROM:	904999	
		MS20001P9-1300		
		ATTACHING PARTS		
- 505	BACR15FT4D	..RIVET-	002004	5
		SIZE DETERMINED ON INSTL.	006100	
			107107	
			121503	
			904999	
		-------*-------		
510	284N1126-26	..PLATE-	002004	1
		USED ON:	107107	
		284N1126-27	121503	
			904949	
			952999	
510	284N1126-47	..PLATE	006100	1
			950951	
515	284N1126-39	..PLATE	002004	1
			006100	
			107107	
			950999	
620	284N1137-22	.ENCLOSURE ASSY-	002004	1
			006100	
			107107	
			121503	
			904999	
- 690	YHLZD33	.TERMINAL-	952952	1
		SUPPLIER CODE:		
		V09922		
		POSITION DATA:		
		POS 15		
		ELECTRICAL EQUIP NUMBER:		
		R10382		
		WIRING DIAGRAM REF:		
		342512		
		POST SERVICE BULLETIN:		
		34-0200		

MISSING ITEM NUMBERS NOT APPLICABLE

- ITEM NOT ILLUSTRATED

BOEING PROPRIETARY - Copyright © - Unpublished Work - See title page for details.

FIG ITEM	PART NUMBER	1 2 3 4 5 6 7 NOMENCLATURE	EFFECT FROM TO	UNITS PER ASSY
1				
- 800	286N1270-002	WIRE BUNDLE ASSY-	121503	RF
		REWORKED BY ALERT SB:		
		27A0130		
		34A0222		
- 800	286N1270-005	WIRE BUNDLE ASSY-	002004	RF
		REWORKED BY ALERT SB:	006100	
		34A0222	950999	
805	RSF116200	.SOCKET-	121503	1
		SUPPLIER CODE:		
		V58982		
		SPECIFICATION NUMBER:		
		BACS16X1A		
		OPTIONAL PART:		
		102-006-1		
		V09922		
		000300-1538		
		V05574		
		ELECTRICAL EQUIP NUMBER:		
		D07350		
		WIRING DIAGRAM REF:		
		783421		
- 815	RSF116208	.SOCKET-	002004	1
		SUPPLIER CODE:	006100	
		V58982	121503	
		SPECIFICATION NUMBER:	950999	
		BACS16X3A		
		OPTIONAL PART:		
		102-005-1		
		V09922		
		000300-1541		
		V05574		
		ELECTRICAL EQUIP NUMBER:		
		D07608		
		WIRING DIAGRAM REF:		
		214411		

MISSING ITEM NUMBERS NOT APPLICABLE

- ITEM NOT ILLUSTRATED

BOEING PROPRIETARY - Copyright © - Unpublished Work - See title page for details.

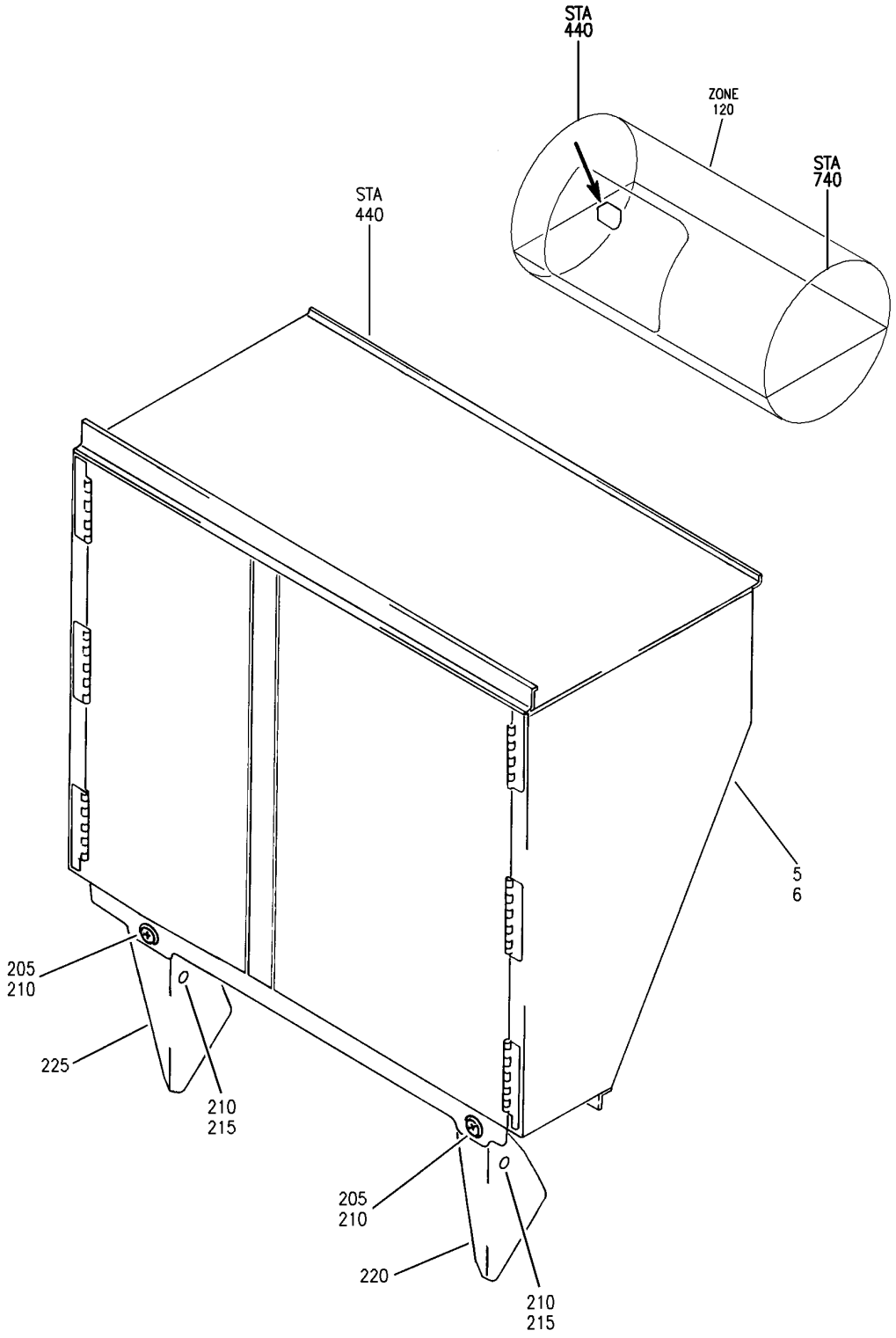

PANEL INSTL-P36 AND P37 MISC E/E EQPT (RIGHT MISCELLANEOUS ELECTRICAL EQUIPMENT PANEL P37 ONLY)
FIGURE 1B

BOEING PROPRIETARY - Copyright © - Unpublished Work - See title page for details.

FIG ITEM	PART NUMBER	1 2 3 4 5 6 7 NOMENCLATURE	EFFECT FROM TO	UNITS PER ASSY
1B				
		PANEL INSTL-P36 AND P37	002004	
		MISC E/E EQPT	006999	
		(RIGHT MISCELLANEOUS		
		ELECTRICAL EQUIPMENT		
		PANEL P37 ONLY)		
- 1	284N1526-1	SHIELD INSTL-P37 MISC ELEC	002004	RF
		EQPT	006100	
		(RIGHT MISCELLANEOUS	107107	
		ELECTRICAL EQUIPMENT	121503	
		PANEL P37 ONLY)	904999	
		FOR NHA SEE:		
		24-00-58-01C		
5	284N1127-1	.PANEL ASSY-P37 RELAY	002004	1
		POSITION DATA:	006100	
		R	107107	
		VARIABLE DRAWING REF:	121503	
		284N1127-5028	904999	
		284N1127-5039		
		284N1127-5045		
		284N1127-5063		
		284N1127-5064		
		284N1127-5068		
		REWORKED BY SB:		
		33-0039		
		34-0200		
		REWORKED BY ALERT SB:		
		27A0130		
		28A0105R1		

MISSING ITEM NUMBERS NOT APPLICABLE

- ITEM NOT ILLUSTRATED

BOEING PROPRIETARY - Copyright © - Unpublished Work - See title page for details.

FIG ITEM	PART NUMBER	1 2 3 4 5 6 7 NOMENCLATURE	EFFECT FROM TO	UNITS PER ASSY
1B				
5	284N1127-1	.PANEL ASSY-P37 RELAY	002004	1
		POSITION DATA:	006100	
		R	107107	
		FUNCTIONAL REFERENCE:	121503	
		AIR CONDITIONING	904999	
		FOR DETAILS SEE		
		21-25-71-02		
		21-44-71-02		
		21-45-31-01		
		21-51-55-01		
		21-58-71-02		
		21-61-71-02		
		COMMUNICATIONS		
		FOR DETAILS SEE		
		23-32-55-01		
		ELECTRICAL POWER		
		FOR DETAILS SEE		
		24-32-52-01		
		24-51-58-02		
		24-53-71-02		
		INDICATING/RECORDING		
		FOR DETAILS SEE		
		31-01-37-01		
		ENGINE CONTROLS		
		FOR DETAILS SEE		
		76-11-71-02		
		EXHAUST		
		FOR DETAILS SEE		
		78-34-71-02		
		78-36-71-02		
		ENGINE FUEL & CONTROL		
		FOR DETAILS SEE		
		73-21-55-01		
		ENGINE INDICATING		
		FOR DETAILS SEE		
		77-12-71-01		
		FIRE PROTECTION		
		FOR DETAILS SEE		
		26-14-55-01		
		FLIGHT CONTROL		
		FOR DETAILS SEE		
		27-62-71-03		
		FUEL		
		FOR DETAILS SEE		
		28-22-71-03		
5	284N1127-1	.PANEL ASSY-P37 RELAY	002004	1
		POSITION DATA:	006100	
		R	107107	
		FUNCTIONAL REFERENCE:	121503	

MISSING ITEM NUMBERS NOT APPLICABLE

– ITEM NOT ILLUSTRATED

BOEING PROPRIETARY - Copyright © - Unpublished Work - See title page for details.

FIG ITEM	PART NUMBER	1 2 3 4 5 6 7 NOMENCLATURE	EFFECT FROM TO	UNITS PER ASSY
1B		HYDRAULIC POWER	904999	
		FOR DETAILS SEE		
		29-21-71-01		
		29-22-71-02		
		ICE & RAIN PROTECTION		
		FOR DETAILS SEE		
		30-11-71-02		
		30-21-71-03		
		30-31-71-02		
		30-32-71-02		
		30-33-71-02		
		30-34-51-01		
		30-71-71-02		
		IGNITION		
		FOR DETAILS SEE		
		74-31-71-02		
		INDICATING/RECORDING		
		FOR DETAILS SEE		
		31-31-71-02		
		LANDING GEAR		
		FOR DETAILS SEE		
		32-09-02-04		
		32-42-71-02		
		32-61-71-02		
		LIGHTS		
		FOR DETAILS SEE		
		33-51-71-01		
		NAVIGATION		
		FOR DETAILS SEE		
		34-12-71-02		
		34-61-52-01		
		34-25-50-01		
		OXYGEN		
		FOR DETAILS SEE		
		35-11-71-01		
		35-21-71-02		
		PLACARDS AND MARKINGS		
		FOR DETAILS SEE		
		11-36-08-04		
		PNEUMATIC		
		FOR DETAILS SEE		
		36-11-71-02		
		ENGINE STARTING		
		FOR DETAILS SEE		
		80-11-71-02		
		WATER/WASTE		
		FOR DETAILS SEE		
		38-15-71-02		

MISSING ITEM NUMBERS NOT APPLICABLE

– ITEM NOT ILLUSTRATED

BOEING PROPRIETARY - Copyright © - Unpublished Work - See title page for details.

FIG ITEM	PART NUMBER	1 2 3 4 5 6 7 NOMENCLATURE	EFFECT FROM TO	UNITS PER ASSY
1B				
		ATTACHING PARTS		
- 10	NAS1801-4-11	.SCREW	002004 006100 107107 121503 904999	4
- 15	AN960PD416L	.WASHER	002004 006100 107107 121503 904999	4
		-------*-------		
- 200	284N1526-52	SHIELD INSTL-P37 MISC ELEC EQPT (RIGHT MISCELLANEOUS ELECTRICAL EQUIPMENT PANEL P37 ONLY) FOR NHA SEE: 24-00-58-05	101102 108120 504903	RF
- 200	MODREF10797	SHIELD INSTL-P37 MISC ELEC EQPT (RIGHT MISCELLANEOUS ELECTRICAL EQUIPMENT PANEL P37 ONLY) MODULE NUMBER: 284N1526-52 REV A	103106	1
205	NAS1801-4-11	.SCREW	101106 108120 504903	2
210	NAS1149D0416H	.WASHER	101106 108120 504903	4

MISSING ITEM NUMBERS NOT APPLICABLE

- ITEM NOT ILLUSTRATED

BOEING PROPRIETARY - Copyright © - Unpublished Work - See title page for details.

FIG ITEM	PART NUMBER	1 2 3 4 5 6 7 NOMENCLATURE	EFFECT FROM TO	UNITS PER ASSY
1B				
215	BRH10A4	.NUT	101106	2
		SUPPLIER CODE:	108120	
		V52828	504903	
		SPECIFICATION NUMBER:		
		BACN10JC4		
		OPTIONAL PART:		
		T6S428J		
		V11815		
		96-048		
		V80539		
		VN303A048		
		V92215		
		RMLH9075-4W		
		V72962		
		NS202101-048		
		V80539		
		H10-4BAC		
		V15653		
220	284N1526-3	.BRACKET ASSY	101106	1
			108120	
			504903	
225	284N1526-12	.BRACKET ASSY	101106	1
			108120	
			504903	
		ATTACHING PARTS		
- 230	BACR15FT5D	.RIVET-	101106	6
		SIZE DETERMINED ON INSTL.	108120	
			504903	
		-------*-------		

MISSING ITEM NUMBERS NOT APPLICABLE

- ITEM NOT ILLUSTRATED

BOEING PROPRIETARY - Copyright © - Unpublished Work - See title page for details.

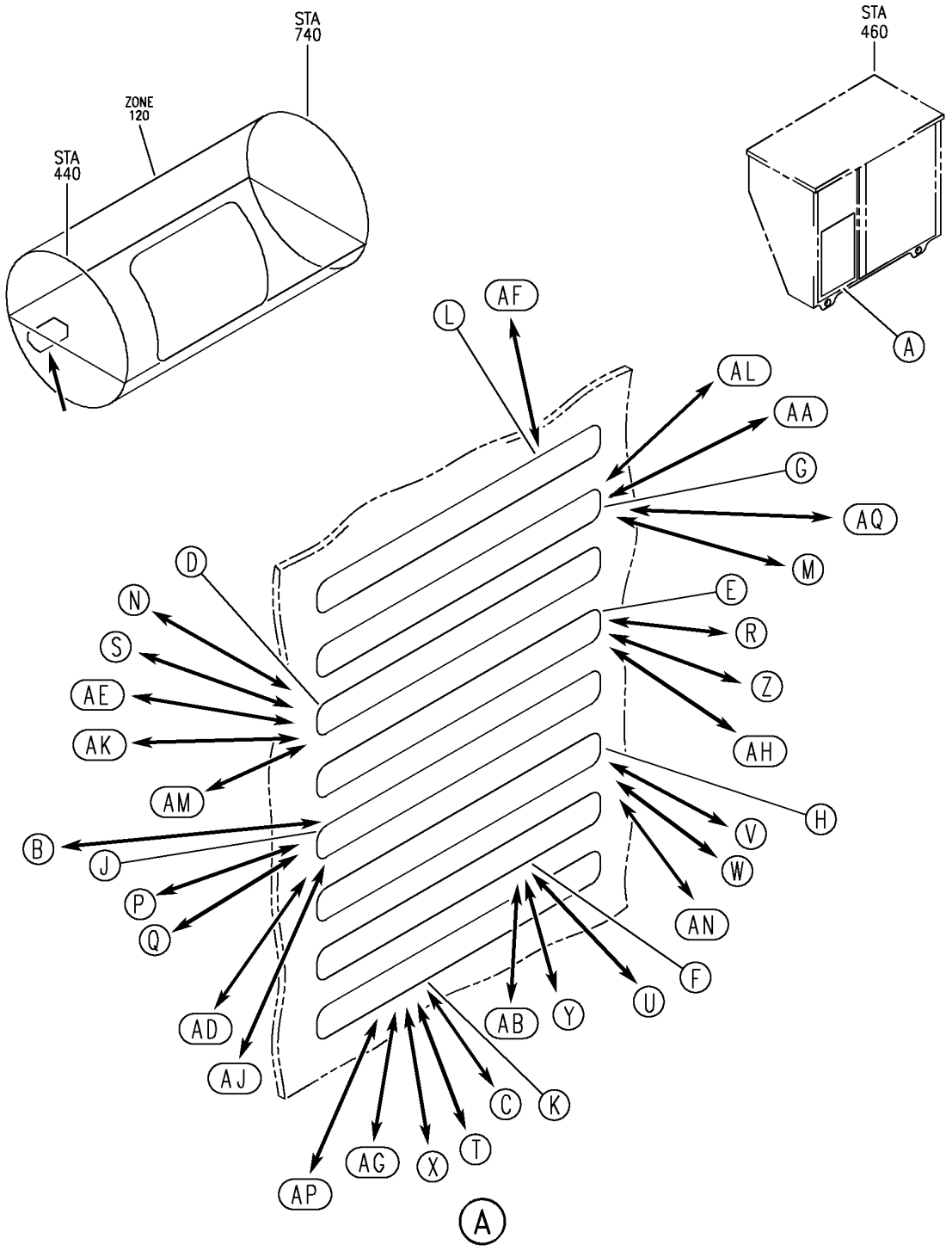

PANEL INSTL-RIGHT MISC RELAY P37
FIGURE 2 (SHEET 1)

BOEING PROPRIETARY - Copyright © - Unpublished Work - See title page for details.

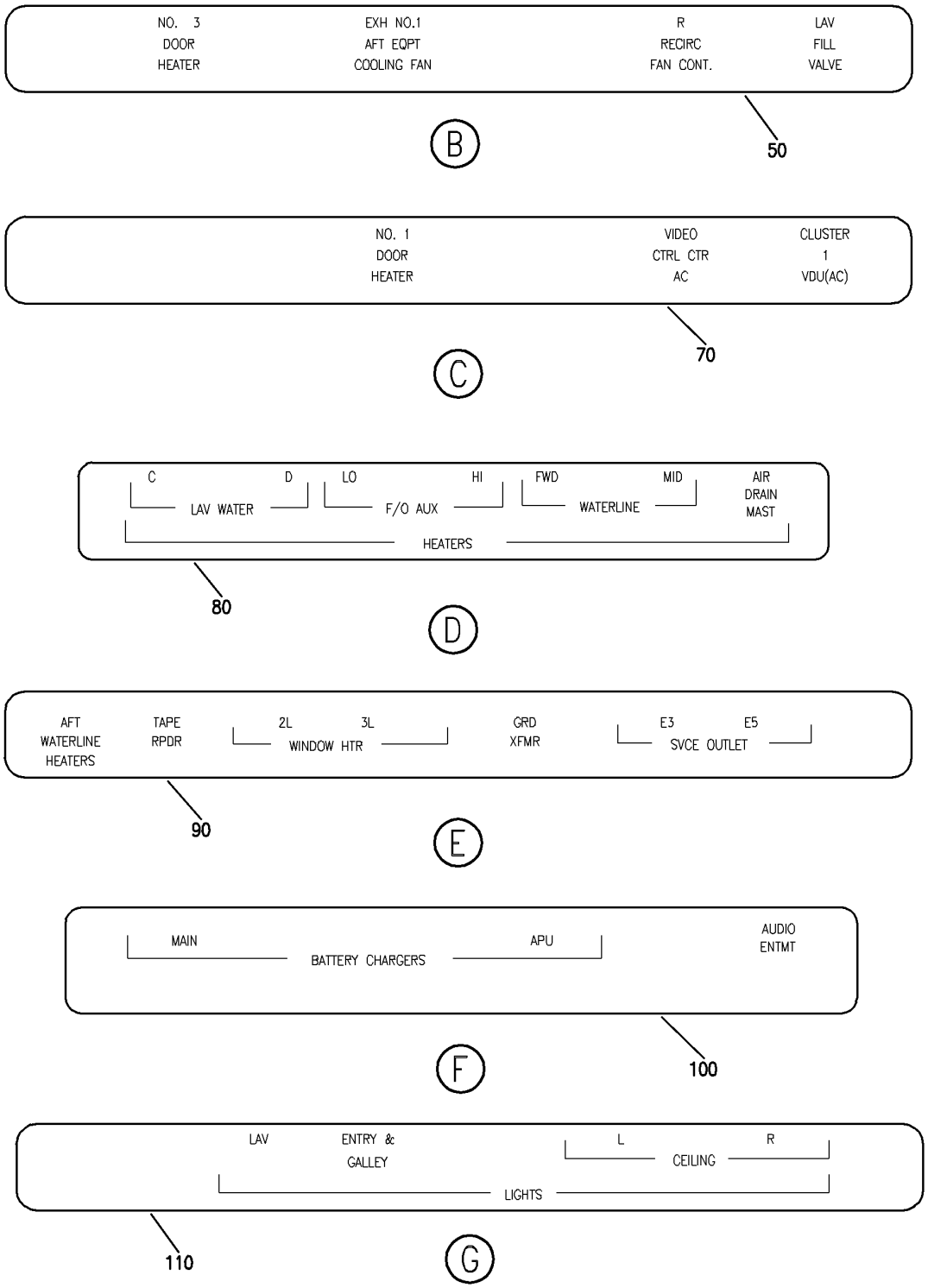

Y 31013702 SHT 2 REV 223

PANEL INSTL-RIGHT MISC RELAY P37
FIGURE 2 (SHEET 2)

BOEING PROPRIETARY - Copyright © - Unpublished Work - See title page for details.

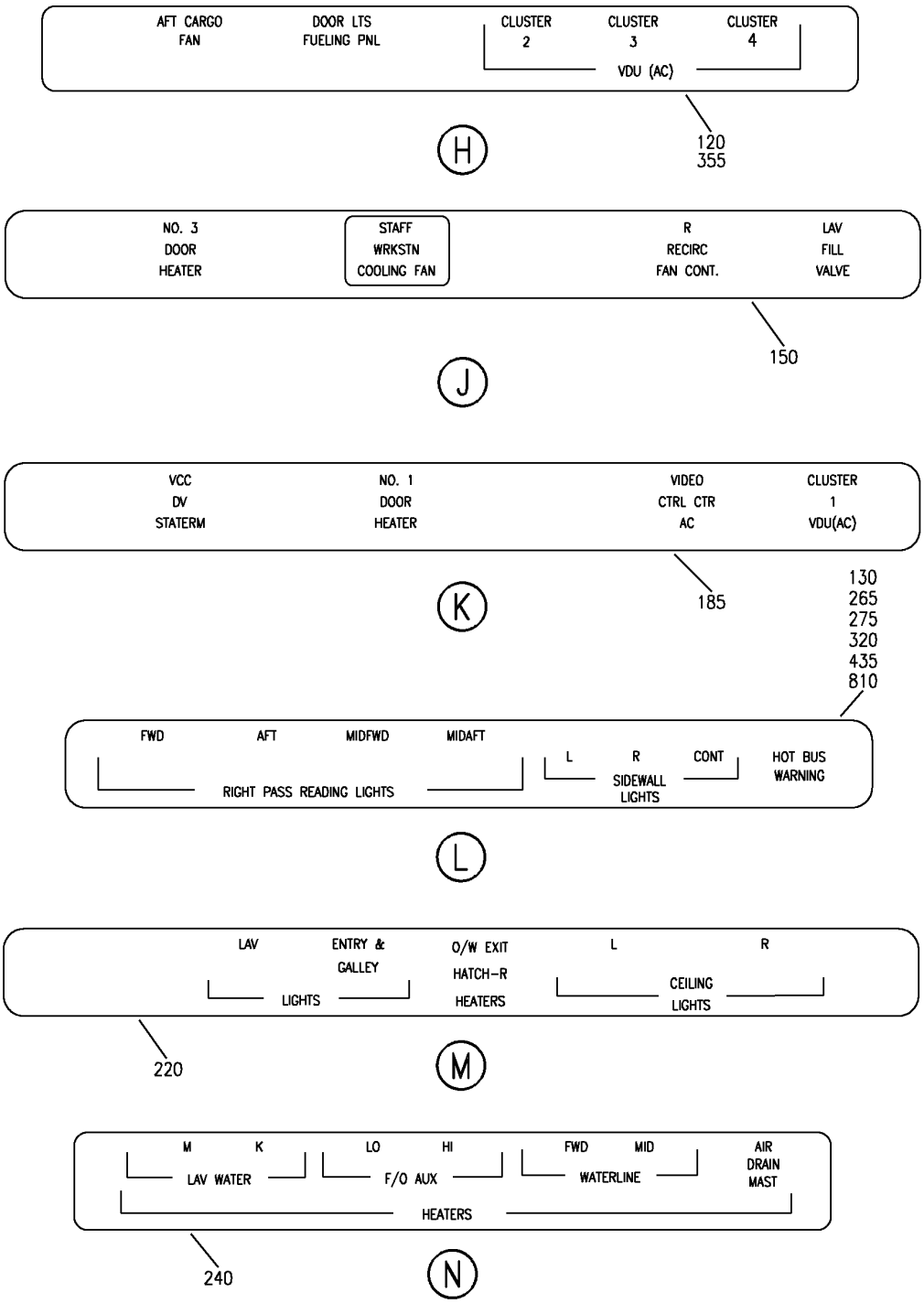

PANEL INSTL-RIGHT MISC RELAY P37
FIGURE 2 (SHEET 3)

BOEING PROPRIETARY - Copyright © - Unpublished Work - See title page for details.

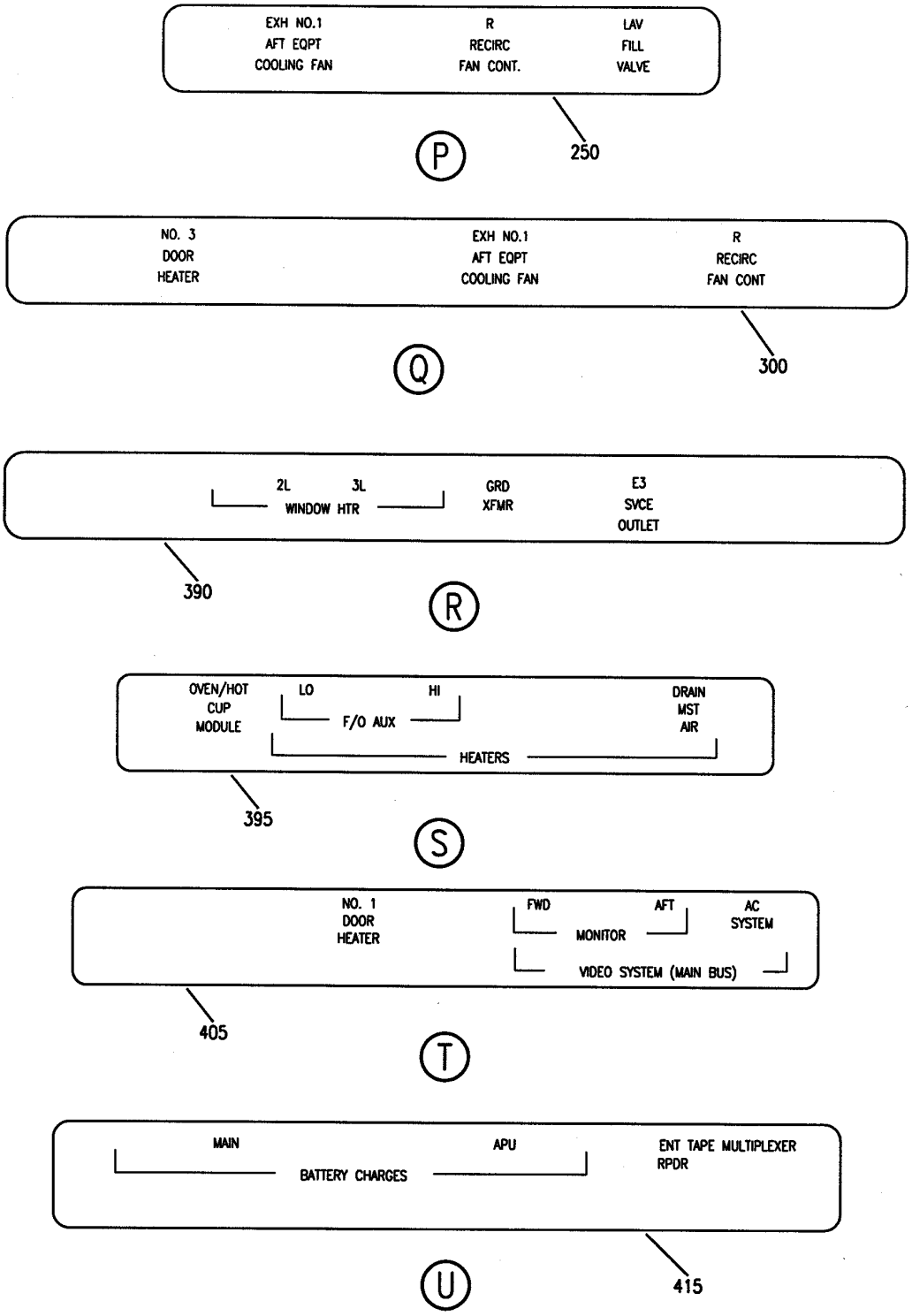

Y 31013702 SHT 4 REV 219

PANEL INSTL-RIGHT MISC RELAY P37
FIGURE 2 (SHEET 4)

BOEING PROPRIETARY - Copyright © - Unpublished Work - See title page for details.

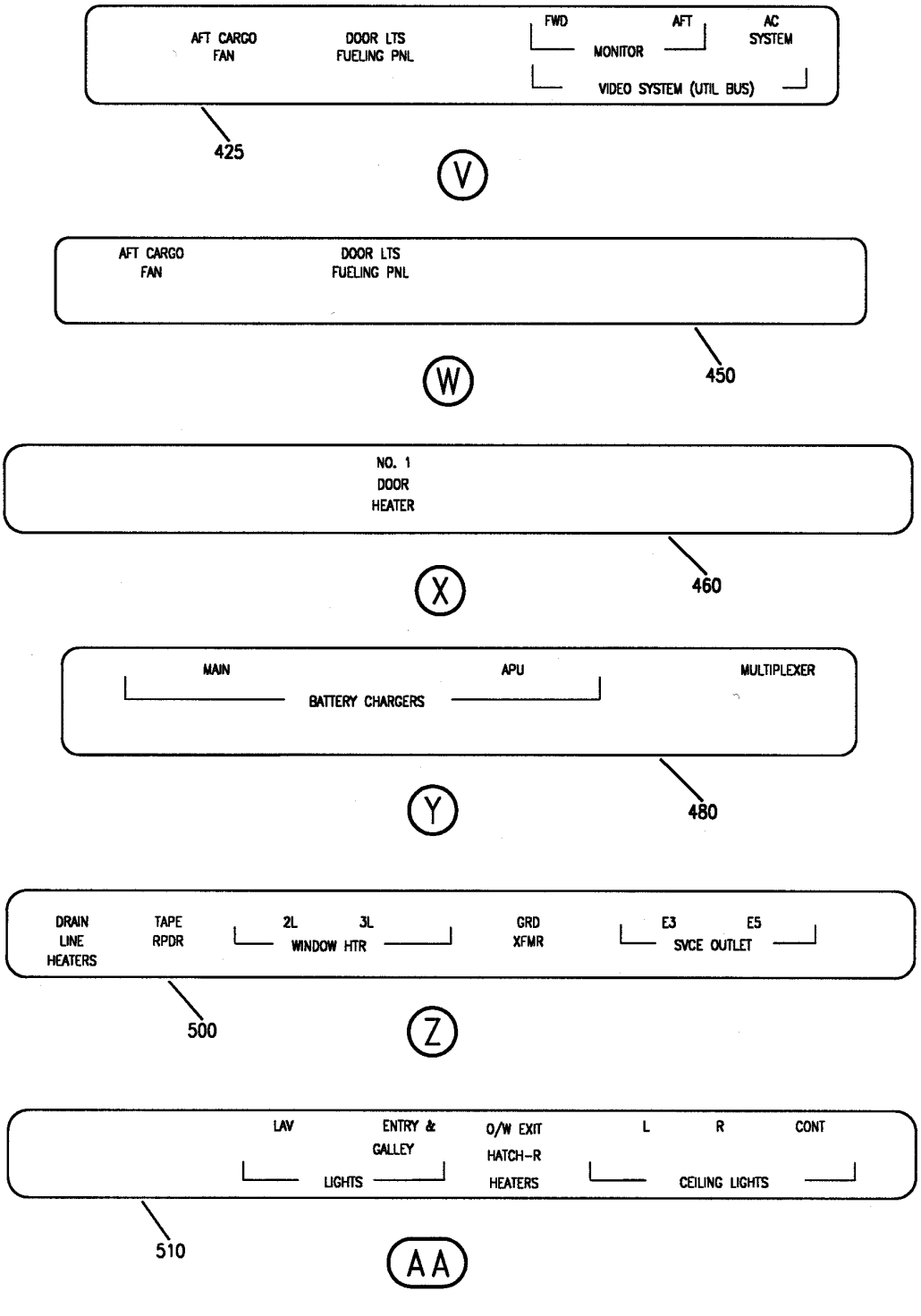

PANEL INSTL-RIGHT MISC RELAY P37
FIGURE 2 (SHEET 5)

BOEING PROPRIETARY - Copyright © - Unpublished Work - See title page for details.

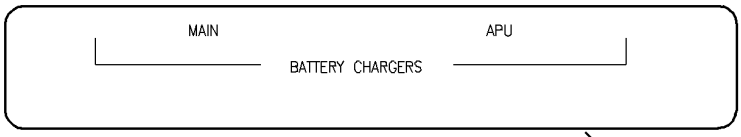

525

AB

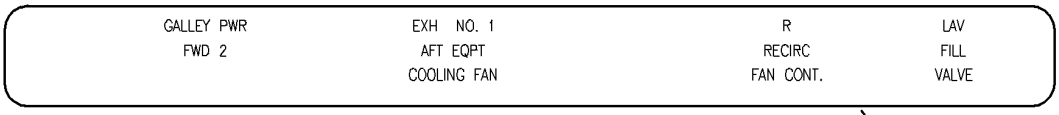

580

AD

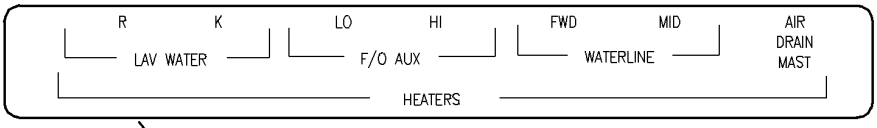

600

AE

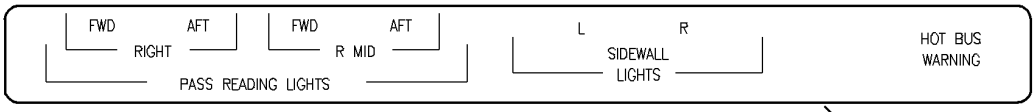

615

AF

645

AG

Y 31013702 SHT 6 REV 223

PANEL INSTL-RIGHT MISC RELAY P37
FIGURE 2 (SHEET 6)

BOEING PROPRIETARY - Copyright © - Unpublished Work - See title page for details.

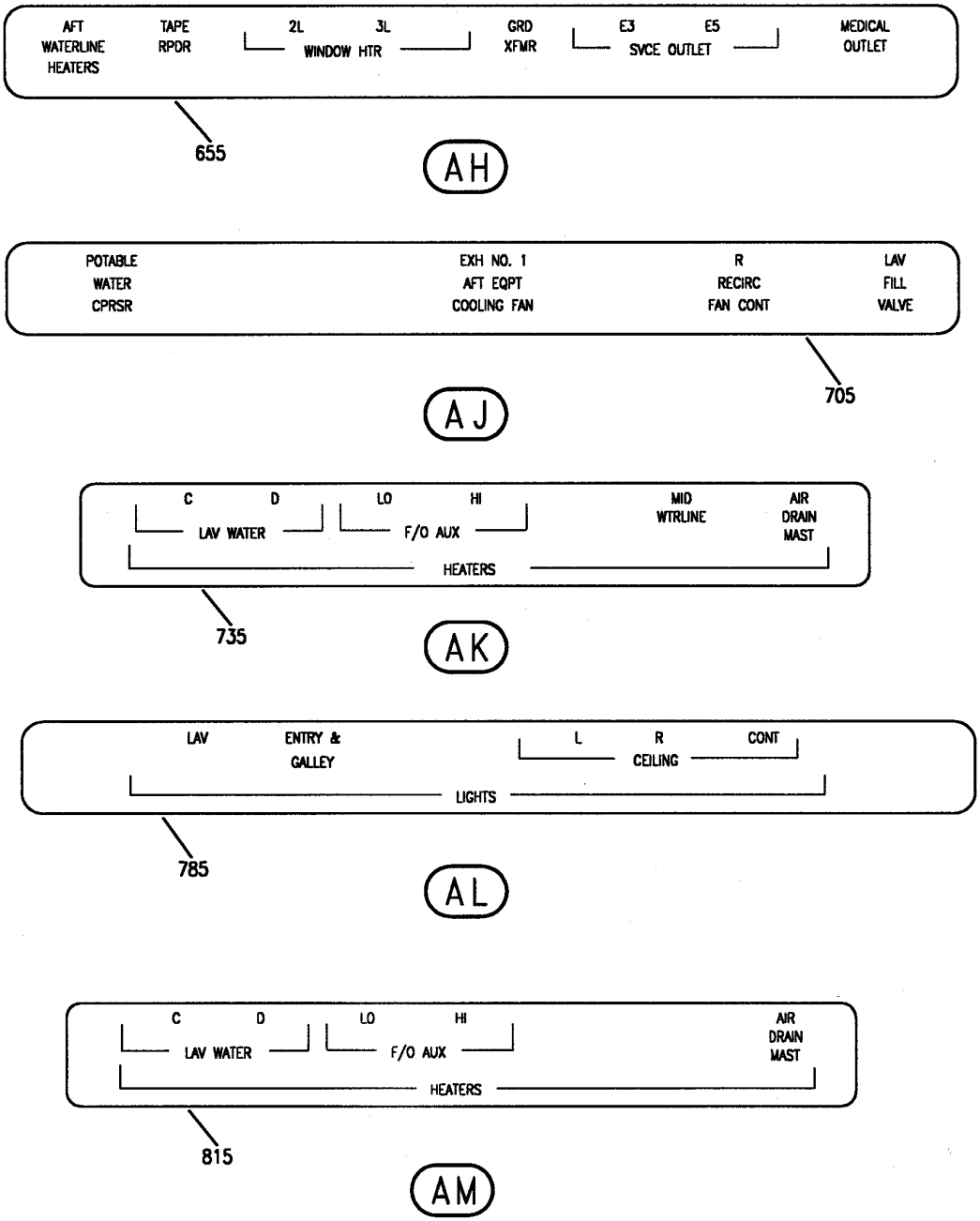

Y 31013702 SHT 7 REV 219

PANEL INSTL-RIGHT MISC RELAY P37
FIGURE 2 (SHEET 7)

BOEING PROPRIETARY - Copyright © - Unpublished Work - See title page for details.

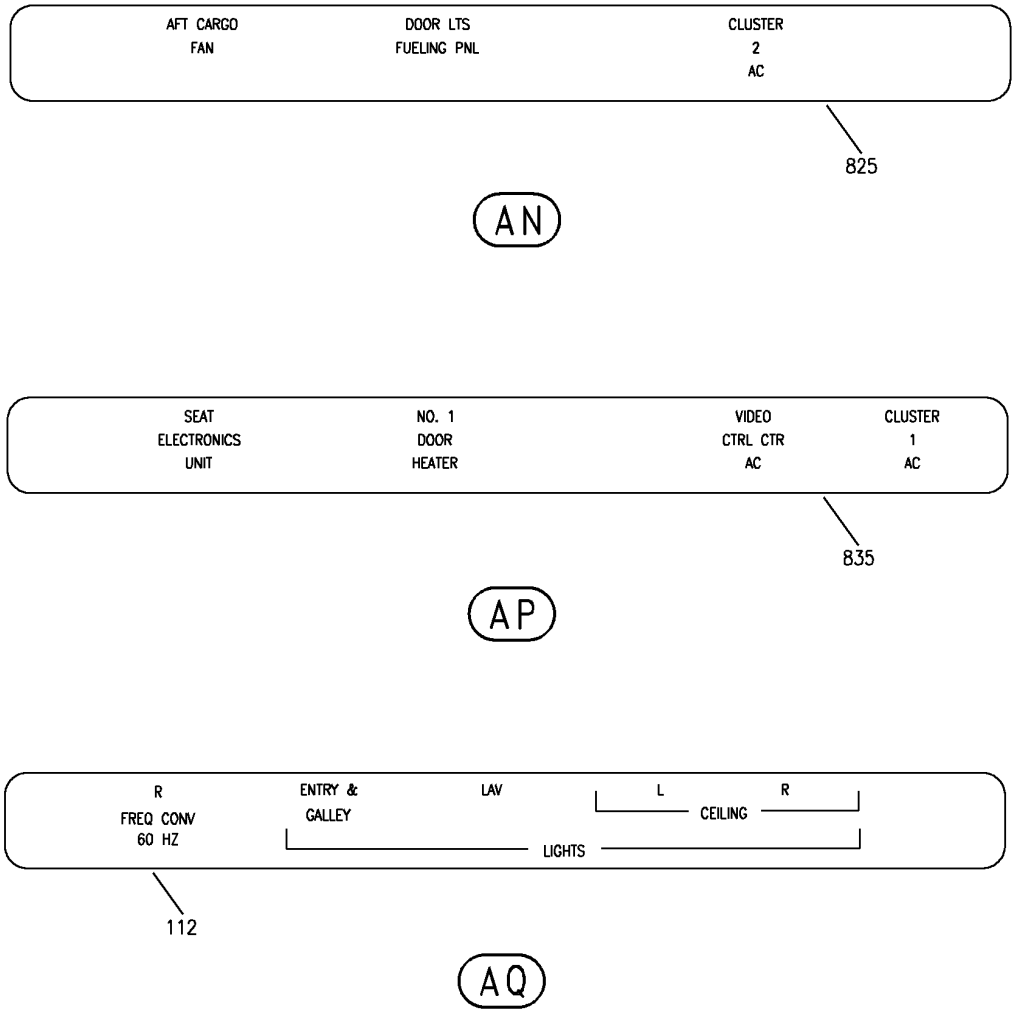

Y 31013702 SHT 8 REV 283

PANEL INSTL-RIGHT MISC RELAY P37
FIGURE 2 (SHEET 8)

BOEING PROPRIETARY - Copyright © - Unpublished Work - See title page for details.

FIG ITEM	PART NUMBER	1 2 3 4 5 6 7 NOMENCLATURE	EFFECT FROM TO	UNITS PER ASSY
2				
		PANEL INSTL-RIGHT MISC	101102	
		RELAY P37	504903	
- 2	284N1127-71	PANEL INSTL-P37 MISC RELAY	504903	RF
		REWORKED BY ALERT SB:		
		27A0130		
		FOR NHA SEE:		
		24-00-58-05C		
- 2	284N1127-94	PANEL INSTL-P37 MISC RELAY	101102	RF
		REWORKED BY ALERT SB:		
		27A0130		
		FOR NHA SEE:		
		24-00-58-05C		
- 5	284N1127-1002	.PACKAGE ASSY-OPTION	101102	1
		MISCELLANEOUS DATA:		
		ETOPS		
		REWORKED BY ALERT SB:		
		27A0130		
		28A0105R1		
		FOR DETAILS SEE:		
		33-51-71-01B		
- 20	284N1127-1005	.PACKAGE ASSY-OPTION	101102	1
		MISCELLANEOUS DATA:		
		AUDIO ENTERTAINMENT		
		SYSTEM		
		REWORKED BY ALERT SB:		
		27A0130		
		FUNCTIONAL REFERENCE:		
		ELECTRICAL POWER		
		FOR DETAILS SEE		
		24-51-58-02B		
		PLACARDS AND MARKINGS		
		FOR DETAILS SEE		
		11-36-12-02		
- 25	284N1127-1006	.PACKAGE ASSY-OPTION	101102	1
		MISCELLANEOUS DATA:	504903	
		DIGITAL FLIGHT		
		ACQUISITION UNIT		
		REWORKED BY ALERT SB:		
		27A0130		
		FOR DETAILS SEE:		
		31-31-71-02B		
- 30	284N1127-1007	.PACKAGE ASSY-OPTION	101102	1
		MISCELLANEOUS DATA:	504903	
		LC LAVATORY		
		REWORKED BY ALERT SB:		
		27A0130		
		FOR DETAILS SEE:		
		24-51-58-02B		

MISSING ITEM NUMBERS NOT APPLICABLE

- ITEM NOT ILLUSTRATED

BOEING PROPRIETARY - Copyright © - Unpublished Work - See title page for details.

FIG ITEM	PART NUMBER	1 2 3 4 5 6 7 NOMENCLATURE	EFFECT FROM TO	UNITS PER ASSY
2				
- 35	284N1127-1008	.PACKAGE ASSY-OPTION MISCELLANEOUS DATA: LD LAVATORY REWORKED BY ALERT SB: 27A0130 FOR DETAILS SEE: 24-51-58-02B	101102 504903	1
- 40	284N1127-1010	.PACKAGE ASSY-OPTION MISCELLANEOUS DATA: FLIGHT MANAGEMENT COMPUTER REWORKED BY ALERT SB: 27A0130 FOR DETAILS SEE: 34-61-52-01B	101102	1
- 45	284N1127-1011	.PACKAGE ASSY-OPTION MISCELLANEOUS DATA: DOOR ARRANGEMENT REWORKED BY ALERT SB: 27A0130 FUNCTIONAL REFERENCE: AIR CONDITIONING FOR DETAILS SEE 21-45-31-01B ELECTRICAL POWER FOR DETAILS SEE 24-51-58-02B	101102 504903	1
50	BAC27NEX2919	..DECAL	101102 504903	1
- 55	284N1127-1012	.PACKAGE ASSY-OPTION MISCELLANEOUS DATA: AIRPORT LIMIT 8400 FT REWORKED BY ALERT SB: 27A0130 FOR DETAILS SEE: 35-21-71-02B	101102 504903	1
- 60	284N1127-1013	.PACKAGE ASSY-OPTION MISCELLANEOUS DATA: LIGHTING REWORKED BY ALERT SB: 27A0130 FOR DETAILS SEE: 24-51-58-02B	504903	1
- 75	284N1127-1015	.PACKAGE ASSY-OPTION MISCELLANEOUS DATA: OPEN P37-F8 REWORKED BY ALERT SB: 27A0130	101102 504903	1

MISSING ITEM NUMBERS NOT APPLICABLE

- ITEM NOT ILLUSTRATED

BOEING PROPRIETARY - Copyright © - Unpublished Work - See title page for details.

FIG ITEM	PART NUMBER	1 2 3 4 5 6 7 NOMENCLATURE	EFFECT FROM TO	UNITS PER ASSY
2				
80	BAC27NEX2336	..DECAL	101102 504903	1
- 85	284N1127-1016	.PACKAGE ASSY-OPTION MISCELLANEOUS DATA: OPEN P37-E8 REWORKED BY ALERT SB: 27A0130	101102 504903	1
90	BAC27NEX2672	..DECAL-	101102 504903	1
- 95	284N1127-1017	.PACKAGE ASSY-OPTION MISCELLANEOUS DATA: OPEN P37-B7 REWORKED BY ALERT SB: 27A0130	101102	1
100	BAC27NEX2947	..DECAL	101102	1
- 105	284N1127-1018	.PACKAGE ASSY-OPTION MISCELLANEOUS DATA: OPEN P37-G1,2,5,8 REWORKED BY ALERT SB: 27A0130	504903	1
110	BAC27NEX2966	..DECAL-	504903	1
- 165	284N1127-1026	.PACKAGE ASSY-OPTION MISCELLANEOUS DATA: REMOTE CREW OXYGEN FILL REWORKED BY ALERT SB: 27A0130	101102 504903	1

MISSING ITEM NUMBERS NOT APPLICABLE

- ITEM NOT ILLUSTRATED

BOEING PROPRIETARY - Copyright © - Unpublished Work - See title page for details.

FIG ITEM	PART NUMBER	1 2 3 4 5 6 7 NOMENCLATURE	EFFECT FROM TO	UNITS PER ASSY
2				
- 200	284N1127-1033	.PACKAGE ASSY-OPTION MISCELLANEOUS DATA: ROLLS ROYCE ENGINES REWORKED BY ALERT SB: 27A0130 FUNCTIONAL REFERENCE: ENGINE CONTROLS FOR DETAILS SEE 76-11-71-02B EXHAUST FOR DETAILS SEE 78-34-71-02B ENGINE FUEL & CONTROL FOR DETAILS SEE 73-21-55-01B ICE & RAIN PROTECTION FOR DETAILS SEE 30-21-71-03B IGNITION FOR DETAILS SEE 74-31-71-02B ENGINE STARTING FOR DETAILS SEE 80-11-71-02B	101102 504903	1
- 225	284N1127-1037	.PACKAGE ASSY-OPTION MISCELLANEOUS DATA: ENGINE INDICATING & CREW ALERTING SYSTEM REWORKED BY ALERT SB: 27A0130 FOR DETAILS SEE: 34-25-50-01B	101102 504903	1
- 255	284N1127-1041	.PACKAGE ASSY-OPTION MISCELLANEOUS DATA: MAJOR MODEL 757 REWORKED BY ALERT SB: 27A0130 28A0105R1 FUNCTIONAL REFERENCE: AIR CONDITIONING FOR DETAILS SEE 21-44-71-02B 21-51-55-01B 21-58-71-02B 21-61-71-02B ELECTRICAL POWER FOR DETAILS SEE 24-32-52-01B 24-51-58-02B	101102 504903	1

MISSING ITEM NUMBERS NOT APPLICABLE

- ITEM NOT ILLUSTRATED

BOEING PROPRIETARY - Copyright © - Unpublished Work - See title page for details.

FIG ITEM	PART NUMBER	1 2 3 4 5 6 7 NOMENCLATURE	EFFECT FROM TO	UNITS PER ASSY
2		ENGINE INDICATING FOR DETAILS SEE 77-12-71-01B EXHAUST FOR DETAILS SEE 78-34-71-02B FLIGHT CONTROL FOR DETAILS SEE 27-62-71-03B FUEL FOR DETAILS SEE 28-22-71-03B HYDRAULIC POWER FOR DETAILS SEE 29-21-71-01B ICE & RAIN PROTECTION FOR DETAILS SEE 30-11-71-02B 30-31-71-02B 30-32-71-02B 30-33-71-02B 30-34-51-01B IGNITION FOR DETAILS SEE 74-31-71-02B INDICATING/RECORDING FOR DETAILS SEE 31-01-37-05 31-31-71-02B LANDING GEAR FOR DETAILS SEE 32-09-02-04B 32-42-71-02B 32-61-71-02B NAVIGATION FOR DETAILS SEE 34-12-71-02B 34-61-52-01B PNEUMATIC FOR DETAILS SEE 36-11-71-02B ENGINE STARTING FOR DETAILS SEE 80-11-71-02B PLACARDS AND MARKINGS FOR DETAILS SEE 11-36-12-02		

MISSING ITEM NUMBERS NOT APPLICABLE

– ITEM NOT ILLUSTRATED

BOEING PROPRIETARY - Copyright © - Unpublished Work - See title page for details.

FIG ITEM	PART NUMBER	1 2 3 4 5 6 7 NOMENCLATURE	EFFECT FROM TO	UNITS PER ASSY
2				
- 270	284N1127-1043	.PACKAGE ASSY-OPTION MISCELLANEOUS DATA: MINOR MODEL 757-200 REWORKED BY ALERT SB: 27A0130 FUNCTIONAL REFERENCE: AIR CONDITIONING FOR DETAILS SEE 21-25-71-02B 21-44-71-02B 21-51-55-01B ELECTRICAL POWER FOR DETAILS SEE 24-51-58-02B EXHAUST FOR DETAILS SEE 78-36-71-02B INDICATING/RECORDING FOR DETAILS SEE 31-31-71-02B LIGHTS FOR DETAILS SEE 33-43-55-01B OXYGEN FOR DETAILS SEE 35-21-71-02B WATER/WASTE FOR DETAILS SEE 38-15-71-02B	101102 504903	1
275	BAC27NEX1809	..DECAL	101102 504903	1
- 305	284N1127-1048	.PACKAGE ASSY-OPTION MISCELLANEOUS DATA: SMOKE DETECTION REWORKED BY ALERT SB: 27A0130 FOR DETAILS SEE: 26-14-55-01	101102	1
- 380	284N1127-1060	.PACKAGE ASSY-OPTION MISCELLANEOUS DATA: VIDEO SYSTEM REWORKED BY ALERT SB: 27A0130 FOR DETAILS SEE: 24-51-58-02B	101102	1

MISSING ITEM NUMBERS NOT APPLICABLE

- ITEM NOT ILLUSTRATED

BOEING PROPRIETARY - Copyright © - Unpublished Work - See title page for details.

FIG ITEM	PART NUMBER	1 2 3 4 5 6 7 NOMENCLATURE	EFFECT FROM TO	UNITS PER ASSY
2				
- 400	284N1127-1062	.PACKAGE ASSY-OPTION MISCELLANEOUS DATA: OPEN P37-A1,2 REWORKED BY ALERT SB: 27A0130	101102	1
405	BAC27NEX2907	..DECAL	101102	1
- 410	284N1127-1063	.PACKAGE ASSY-OPTION MISCELLANEOUS DATA: OPEN P37-B REWORKED BY ALERT SB: 27A0130	504903	1
415	BAC27NEX2353	..DECAL	504903	1
- 420	284N1127-1064	.PACKAGE ASSY-OPTION MISCELLANEOUS DATA: OPEN P37-C5 REWORKED BY ALERT SB: 27A0130	101102	1
425	BAC27NEX2654	..DECAL	101102	1
- 440	284N1127-1067	.PACKAGE ASSY-OPTION MISCELLANEOUS DATA: AUDIO ENTMT SYS (INOP) REWORKED BY ALERT SB: 27A0130 FUNCTIONAL REFERENCE: ELECTRICAL POWER FOR DETAILS SEE 24-51-58-02B PLACARDS AND MARKINGS FOR DETAILS SEE 11-36-12-02	504903	1
- 465	284N1127-1070	.PACKAGE ASSY-OPTION MISCELLANEOUS DATA: BUS SWITCHING REWORKED BY ALERT SB: 27A0130 FOR DETAILS SEE: 23-32-55-01B	101102	1
- 470	284N1127-1071	.PACKAGE ASSY-OPTION P37 MISCELLANEOUS DATA: GALLEY UTILITY BUS REWORKED BY ALERT SB: 27A0130 FOR DETAILS SEE: 24-51-58-02B	504903	1

MISSING ITEM NUMBERS NOT APPLICABLE

- ITEM NOT ILLUSTRATED

BOEING PROPRIETARY - Copyright © - Unpublished Work - See title page for details.

FIG ITEM	PART NUMBER	1 2 3 4 5 6 7 NOMENCLATURE	EFFECT FROM TO	UNITS PER ASSY
2				
- 565	284N1127-1085	.PACKAGE ASSY-OPTION MISCELLANEOUS DATA: LIGHTING REWORKED BY ALERT SB: 27A0130 FOR DETAILS SEE: 24-51-58-02B	101102	1
- 570	284N1127-1086	.PACKAGE ASSY-OPTION MISCELLANEOUS DATA: FLIGHT MANAGEMENT COMPUTER REWORKED BY ALERT SB: 27A0130 FOR DETAILS SEE: 34-61-52-01B	504903	1
- 670	284N1127-2002	.PACKAGE ASSY-OPTION MISCELLANEOUS DATA: POTABLE WATER REWORKED BY ALERT SB: 27A0130 FOR DETAILS SEE: 24-51-58-02B	504903	1
- 675	284N1127-2003	.PACKAGE ASSY-OPTION MISCELLANEOUS DATA: GALLEY G2B REWORKED BY ALERT SB: 27A0130 FUNCTIONAL REFERENCE: ELECTRICAL POWER FOR DETAILS SEE 24-51-58-02B PLACARDS AND MARKINGS FOR DETAILS SEE 11-36-12-02	504903	1
- 680	284N1127-2004	.PACKAGE ASSY-OPTION MISCELLANEOUS DATA: GALLEY G2D REWORKED BY ALERT SB: 27A0130 FUNCTIONAL REFERENCE: ELECTRICAL POWER FOR DETAILS SEE 24-51-58-02B PLACARDS AND MARKINGS FOR DETAILS SEE 11-36-12-02	504903	1

MISSING ITEM NUMBERS NOT APPLICABLE

- ITEM NOT ILLUSTRATED

BOEING PROPRIETARY - Copyright © - Unpublished Work - See title page for details.

FIG ITEM	PART NUMBER	1 2 3 4 5 6 7 NOMENCLATURE	EFFECT FROM TO	UNITS PER ASSY
2				
- 685	284N1127-2005	.PACKAGE ASSY-OPTION MISCELLANEOUS DATA: SPECIAL ENGINE REWORKED BY ALERT SB: 27A0130 FUNCTIONAL REFERENCE: ENGINE CONTROLS FOR DETAILS SEE 76-11-71-02B ENGINE STARTING FOR DETAILS SEE 80-11-71-02B IGNITION FOR DETAILS SEE 74-31-71-01B	504903	1
- 690	284N1127-2006	.PACKAGE ASSY-OPTION MISCELLANEOUS DATA: POWER SEATS (INOP) REWORKED BY ALERT SB: 27A0130 FUNCTIONAL REFERENCE: ELECTRICAL POWER FOR DETAILS SEE 24-51-58-02B PLACARDS AND MARKINGS FOR DETAILS SEE 11-36-12-02	504903	1
- 755	284N1127-2018	.PACKAGE ASSY-OPTION MISCELLANEOUS DATA: VOICE RECORDER REWORKED BY ALERT SB: 27A0130 FOR DETAILS SEE: 77-12-71-01B	101102 504903	1
- 780	284N1127-2027	.PACKAGE ASSY-OPTION MISCELLANEOUS DATA: OPEN P37-G1,2,5 REWORKED BY ALERT SB: 27A0130	101102	1
785	BAC27NEX2175	..DECAL- USED ON: 284N1127-2027	101102	1

MISSING ITEM NUMBERS NOT APPLICABLE

- ITEM NOT ILLUSTRATED

BOEING PROPRIETARY - Copyright © - Unpublished Work - See title page for details.

FIG ITEM	PART NUMBER	1 2 3 4 5 6 7 NOMENCLATURE	EFFECT FROM TO	UNITS PER ASSY
2				
- 790	284N1127-2028	.PACKAGE ASSY-OPTION MISCELLANEOUS DATA: VIDEO SYS (INOP) REWORKED BY ALERT SB: 27A0130 FUNCTIONAL REFERENCE: ELECTRICAL POWER FOR DETAILS SEE 24-51-58-02B PLACARDS AND MARKINGS FOR DETAILS SEE 11-36-12-02	504903	1
- 820	284N1127-2024	.PACKAGE ASSY-OPTION REWORKED BY ALERT SB: 27A0130	504903	1
825	BAC27NEX3119	..DECAL	504903	1
- 830	284N1127-2025	.PACKAGE ASSY-OPTION REWORKED BY ALERT SB: 27A0130	504903	1
835	BAC27NEX3120	..DECAL	504903	1
- 865	284N1127-2036	.PACKAGE ASSY-OPTION MISCELLANEOUS DATA: VIDEO RELAY REWORKED BY ALERT SB: 27A0130 FOR DETAILS SEE: 23-32-55-02	504903	1

MISSING ITEM NUMBERS NOT APPLICABLE

- ITEM NOT ILLUSTRATED

BOEING PROPRIETARY - Copyright © - Unpublished Work - See title page for details.

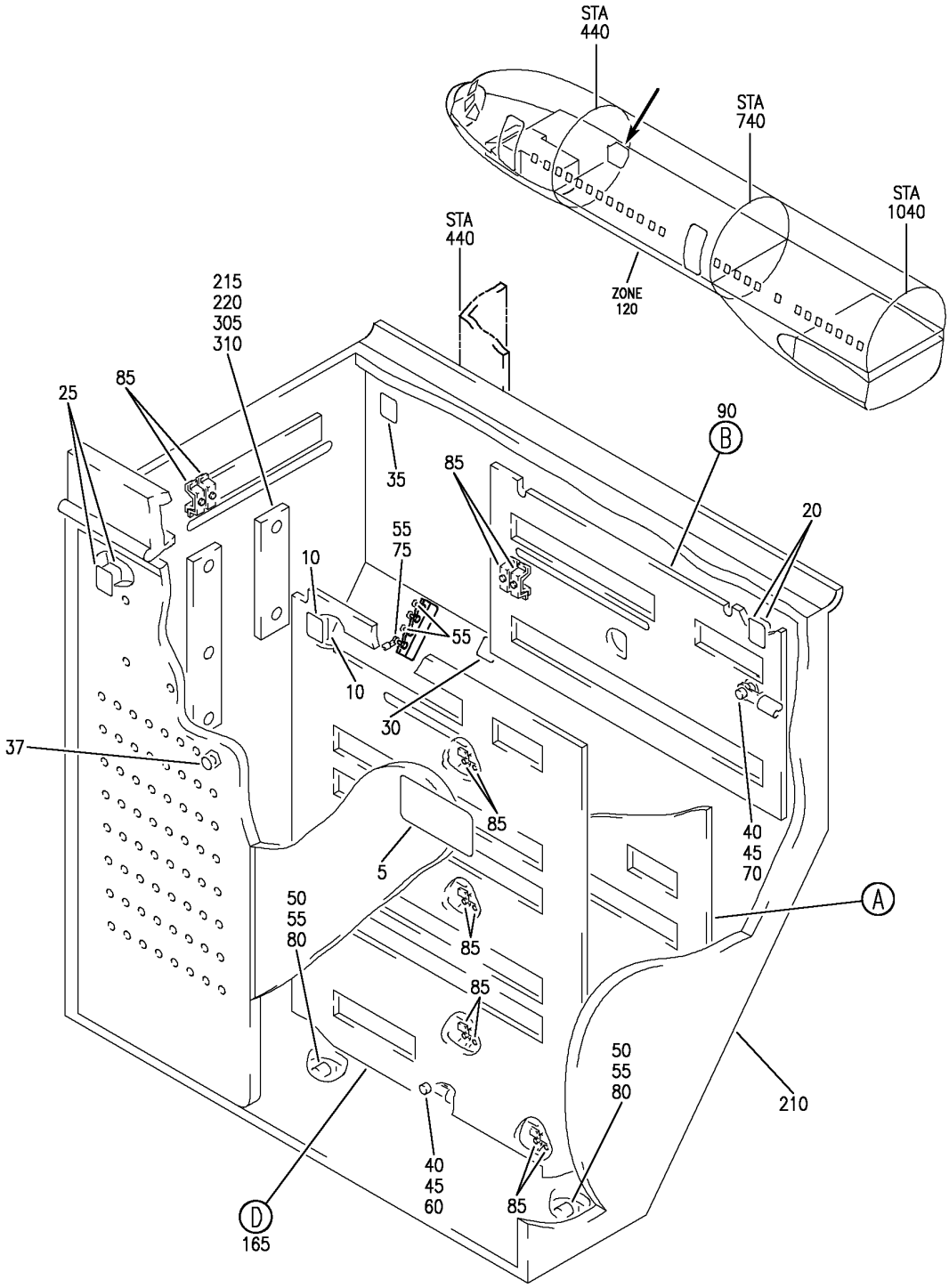

PACKAGE ASSY-OPTION P37 MISC RELAY (EQUIPMENT/ FURNISHINGS ONLY)
FIGURE 5 (SHEET 1)

BOEING PROPRIETARY - Copyright © - Unpublished Work - See title page for details.

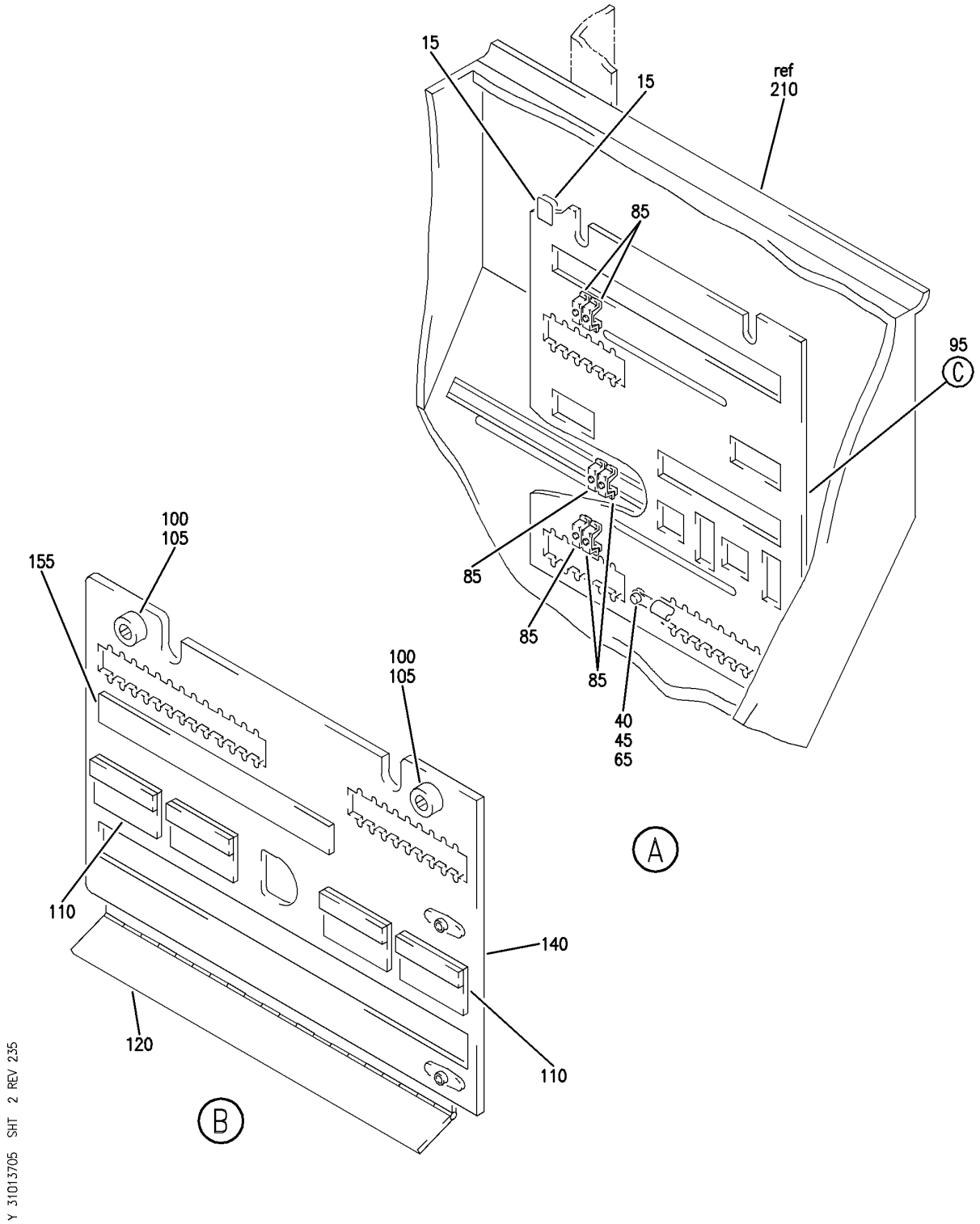

PACKAGE ASSY-OPTION P37 MISC RELAY (EQUIPMENT/ FURNISHINGS ONLY)
FIGURE 5 (SHEET 2)

BOEING PROPRIETARY - Copyright © - Unpublished Work - See title page for details.

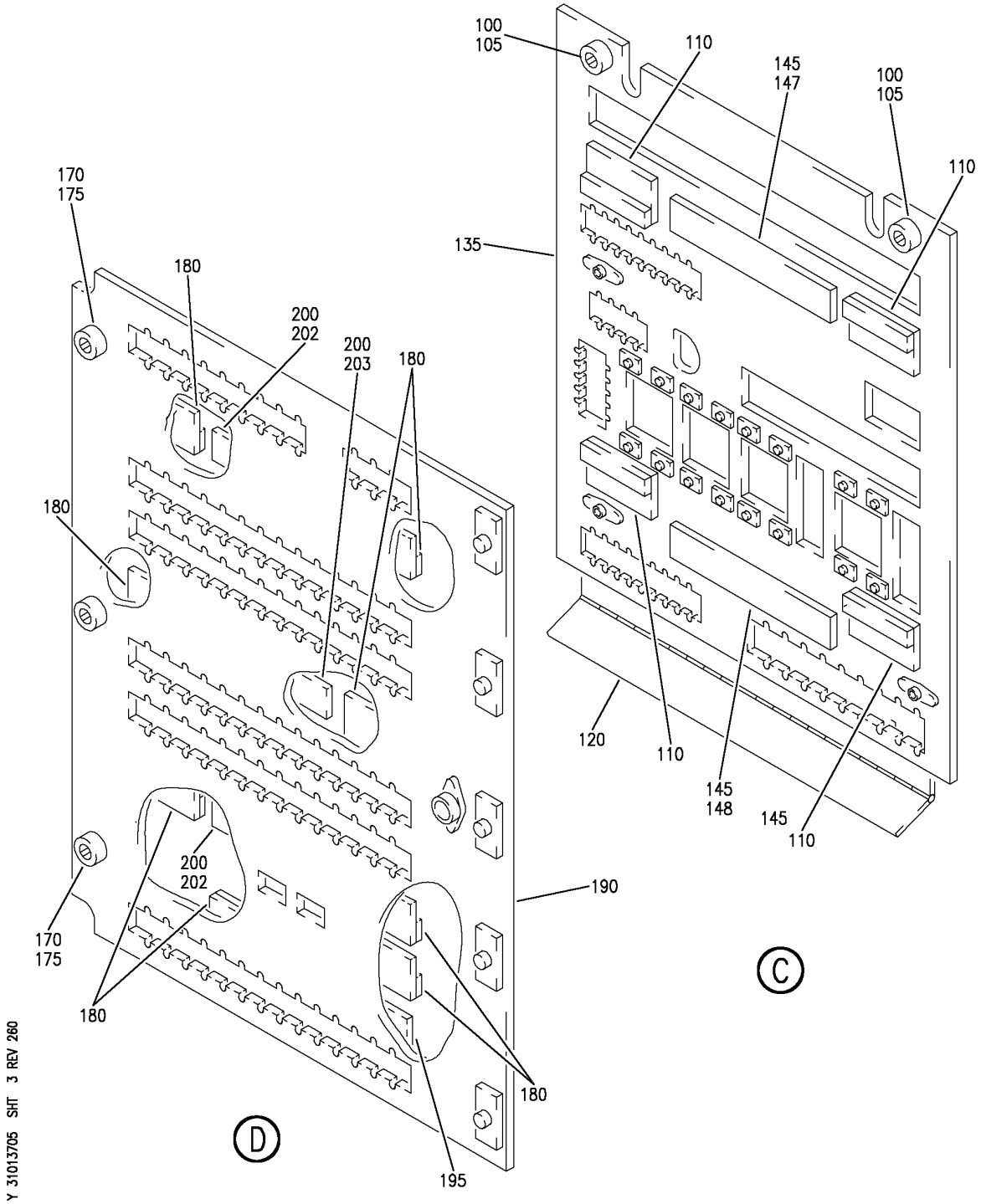

PACKAGE ASSY-OPTION P37 MISC RELAY (EQUIPMENT/ FURNISHINGS ONLY)
FIGURE 5 (SHEET 3)

BOEING PROPRIETARY - Copyright © - Unpublished Work - See title page for details.

FIG ITEM	PART NUMBER	1 2 3 4 5 6 7 NOMENCLATURE	EFFECT FROM TO	UNITS PER ASSY
5		PACKAGE ASSY-OPTION P37 MISC RELAY (EQUIPMENT/ FURNISHINGS ONLY)	101102 504903	
- 1	284N1127-1041	PACKAGE ASSY-OPTION P37 MISC RELAY (EQUIPMENT/FURNISHINGS ONLY) REWORKED BY ALERT SB: 27A0130 FOR NHA/OTHER SYS DET SEE: 31-01-37-02	101102 504903	RF
5	BAC27NEX2344	.DECAL-P37 PANEL MISC ELEC EQUIP, R.	101102 504903	1
10	BAC27NEX0173	.DECAL- PLACARD CONTENT: A	101102 504903	2
15	BAC27NEX0174	.DECAL- PLACARD CONTENT: B	101102 504903	2
20	BAC27NEX0175	.DECAL- PLACARD CONTENT: C	101102 504903	2
25	BAC27NEX0176	.DECAL- PLACARD CONTENT: D	101102 504903	2
30	BAC27NEX0247	.DECAL- PLACARD CONTENT: E	101102 504903	1
35	BAC27NEX0248	.DECAL- PLACARD CONTENT: F	101102 504903	1
37	33-32683-6P1	.LIGHT-LIGHT SUPPLIER CODE: V79692 ELECTRICAL EQUIP NUMBER: L00373	101102 504903	1
40	NAS1801-4-8	.SCREW	101102 504903	3
45	NAS1149D0416J	.WASHER	101102 504903	9
50	NAS1149D0463J	.WASHER	101102 504903	4
55	MS21042L4	.NUT	101102 504903	6
60	287N1404-9	.JUMPER ASSY	101102 504903	1
65	287N1404-12	.JUMPER ASSY	101102 504903	1

MISSING ITEM NUMBERS NOT APPLICABLE

- ITEM NOT ILLUSTRATED

BOEING PROPRIETARY - Copyright © - Unpublished Work - See title page for details.

FIG ITEM	PART NUMBER	1 2 3 4 5 6 7 NOMENCLATURE	EFFECT FROM TO	UNITS PER ASSY
5				
70	287N1404-22	.JUMPER ASSY	101102 504903	1
75	287N1404-23	.JUMPER ASSY	101102 504903	1
80	RBEJ40E20-24	.JUMPER SUPPLIER CODE: V1GK47 SPECIFICATION NUMBER: BACJ40E20-24 OPTIONAL PART: 740E20-24 V91812	101102 504903	2
85	H49-2	.CLAMP SUPPLIER CODE: V34941 SPECIFICATION NUMBER: BACC49A2 OPTIONAL PART: MF104-2 V6E102	101102 504903	18
90	284N1126-40	.PLATE ASSY-MTG	101102 504903	1
95	284N1126-48	.PLATE ASSY-MTG	101102 504903	1
100	BACS21Y4R	..STUD ASSY	101102 504903	2
105	1127700	..WASHER SUPPLIER CODE: V60119 SPECIFICATION NUMBER: BACW10X4 OPTIONAL PART: 2600LW V71286	101102 504903	2
110	YHLZG16-1	..BLOCK-GND SUPPLIER CODE: V09922 ATTACHING PARTS	101102 504903	4
- 115	BACR15FT5AD	..RIVET- SIZE DETERMINED ON INSTL. -------*-------	101102 504903	16
120	284N1126-11	..HINGE- ALTERED FROM PART NUMBER: MS20001P9-1300 MANUFACTURED FROM: MS20001P9-1300	101102 504903	1

MISSING ITEM NUMBERS NOT APPLICABLE

- ITEM NOT ILLUSTRATED

BOEING PROPRIETARY - Copyright © - Unpublished Work - See title page for details.

FIG ITEM	PART NUMBER	1 2 3 4 5 6 7 NOMENCLATURE	EFFECT FROM TO	UNITS PER ASSY
5				
		ATTACHING PARTS		
- 125	BACR15BB4AD	..RIVET-	101102	5
		SIZE DETERMINED ON INSTL.	504903	
		USED ON:		
		284N1126-40		
- 130	BACR15BB4DC	..RIVET-	101102	5
		SIZE DETERMINED ON INSTL.	504903	
		USED ON:		
		284N1126-48		
		-------*-------		
135	284N1126-47	..PLATE-	101102	1
		USED ON:	504903	
		284N1126-48		
140	284N1126-39	..PLATE-	101102	1
		USED ON:	504903	
		284N1126-40		
145	AMY0825T5	..TRACK-	101102	2
		SUPPLIER CODE:	504903	
		V09922		
		SPECIFICATION NUMBER:		
		BACT44B0825U		
		USED ON:		
		284N1126-48		
		ATTACHING PARTS		
- 150	BACR15BA4DC	..RIVET-	101102	8
		SIZE DETERMINED ON INSTL.	504903	
		-------*-------		
155	BACT44B1000U	..TRACK-	101102	1
		USED ON:	504903	
		284N1126-40		
		ATTACHING PARTS		
- 160	BACR15BB4AD	..RIVET-	101102	5
		SIZE DETERMINED ON INSTL.	504903	
		-------*-------		
165	284N1126-46	.PLATE ASSY-MTG	101102	1
			504903	
170	BACS21Y4R	..STUD ASSY	101102	3
			504903	
175	1127700	..WASHER	101102	3
		SUPPLIER CODE:	504903	
		V60119		
		SPECIFICATION NUMBER:		
		BACW10X4		
		OPTIONAL PART:		
		2600LW		
		V71286		
180	YHLZG16-1	..BLOCK-GND	101102	8
		SUPPLIER CODE:	504903	
		V09922		

MISSING ITEM NUMBERS NOT APPLICABLE

– ITEM NOT ILLUSTRATED

BOEING PROPRIETARY - Copyright © - Unpublished Work - See title page for details.

FIG ITEM	PART NUMBER	1 2 3 4 5 6 7 NOMENCLATURE	EFFECT FROM TO	UNITS PER ASSY
5				
		ATTACHING PARTS		
- 185	BACR15FT5D	..RIVET-	101102	32
		SIZE DETERMINED ON INSTL.	504903	
		-------*-------		
190	284N1126-45	..PLATE	101102	1
			504903	
195	AMY0400T5	..TRACK	101102	1
		SUPPLIER CODE:	504903	
		V09922		
		SPECIFICATION NUMBER:		
		BACT44B0400U		
200	AMY0625T5	..TRACK	101102	3
		SUPPLIER CODE:	504903	
		V09922		
		SPECIFICATION NUMBER:		
		BACT44B0625U		
		ATTACHING PARTS		
- 205	BACR15BA4D	..RIVET-	101102	15
		SIZE DETERMINED ON INSTL.	504903	
		-------*-------		
210	13341000-7	.ENCLOSURE ASSY-	101102	1
		SUPPLIER CODE:	504903	
		V23296		

MISSING ITEM NUMBERS NOT APPLICABLE

- ITEM NOT ILLUSTRATED

BOEING PROPRIETARY - Copyright © - Unpublished Work - See title page for details.

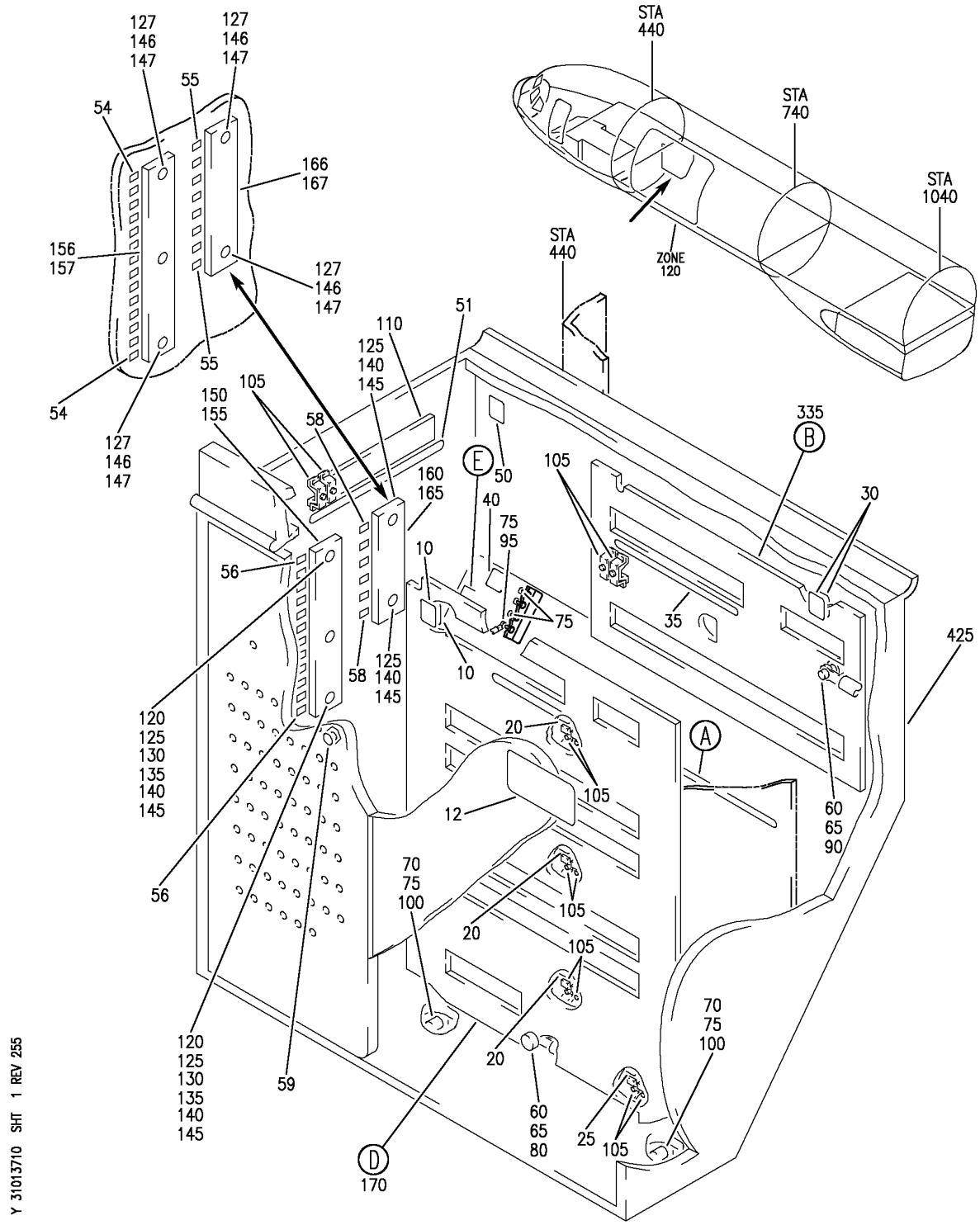

PANEL INSTL-P37 R MISC RELAY (E/E PANELS ONLY)
FIGURE 10 (SHEET 1)

BOEING PROPRIETARY - Copyright © - Unpublished Work - See title page for details.

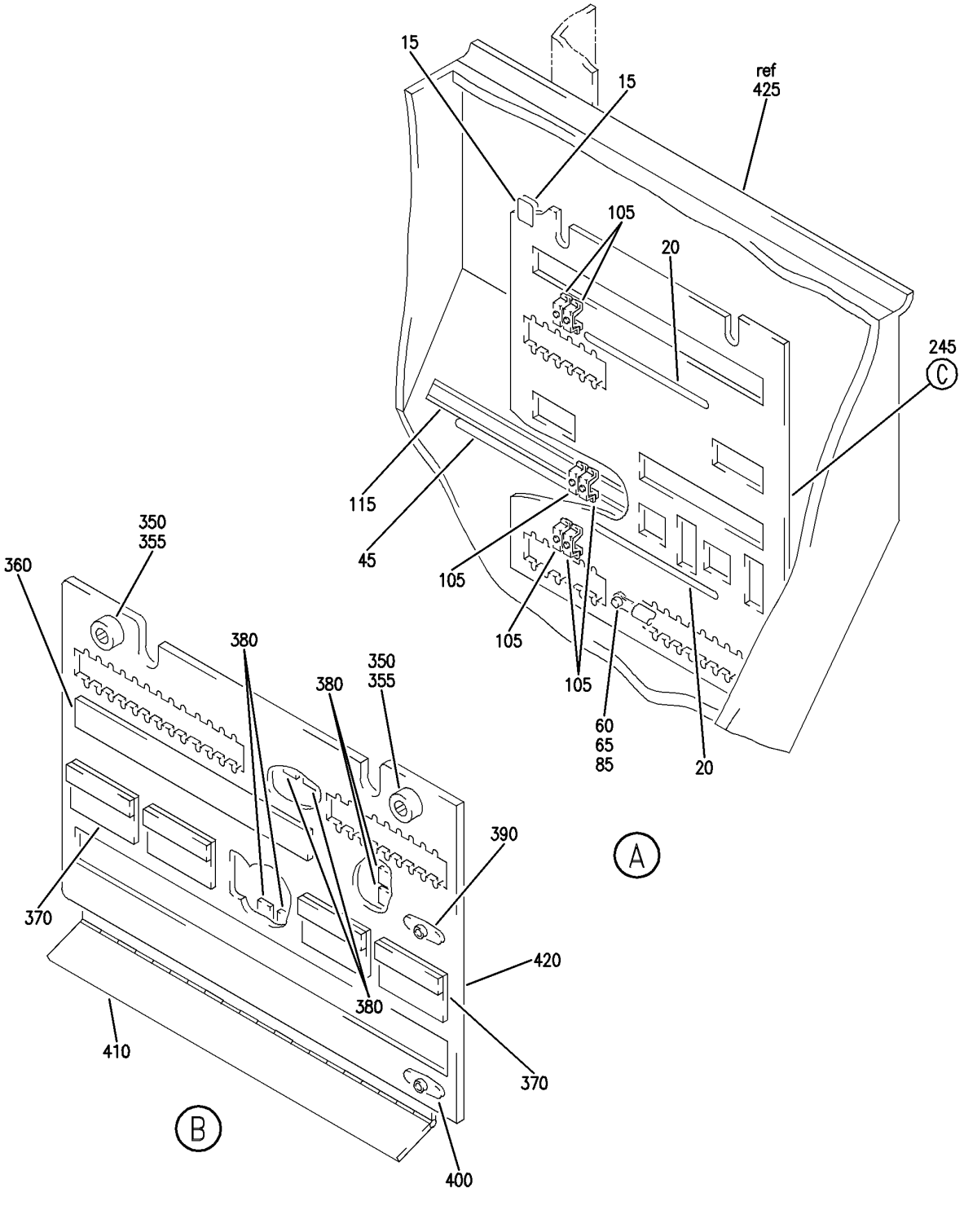

PANEL INSTL-P37 R MISC RELAY (E/E PANELS ONLY)
FIGURE 10 (SHEET 2)

BOEING PROPRIETARY - Copyright © - Unpublished Work - See title page for details.

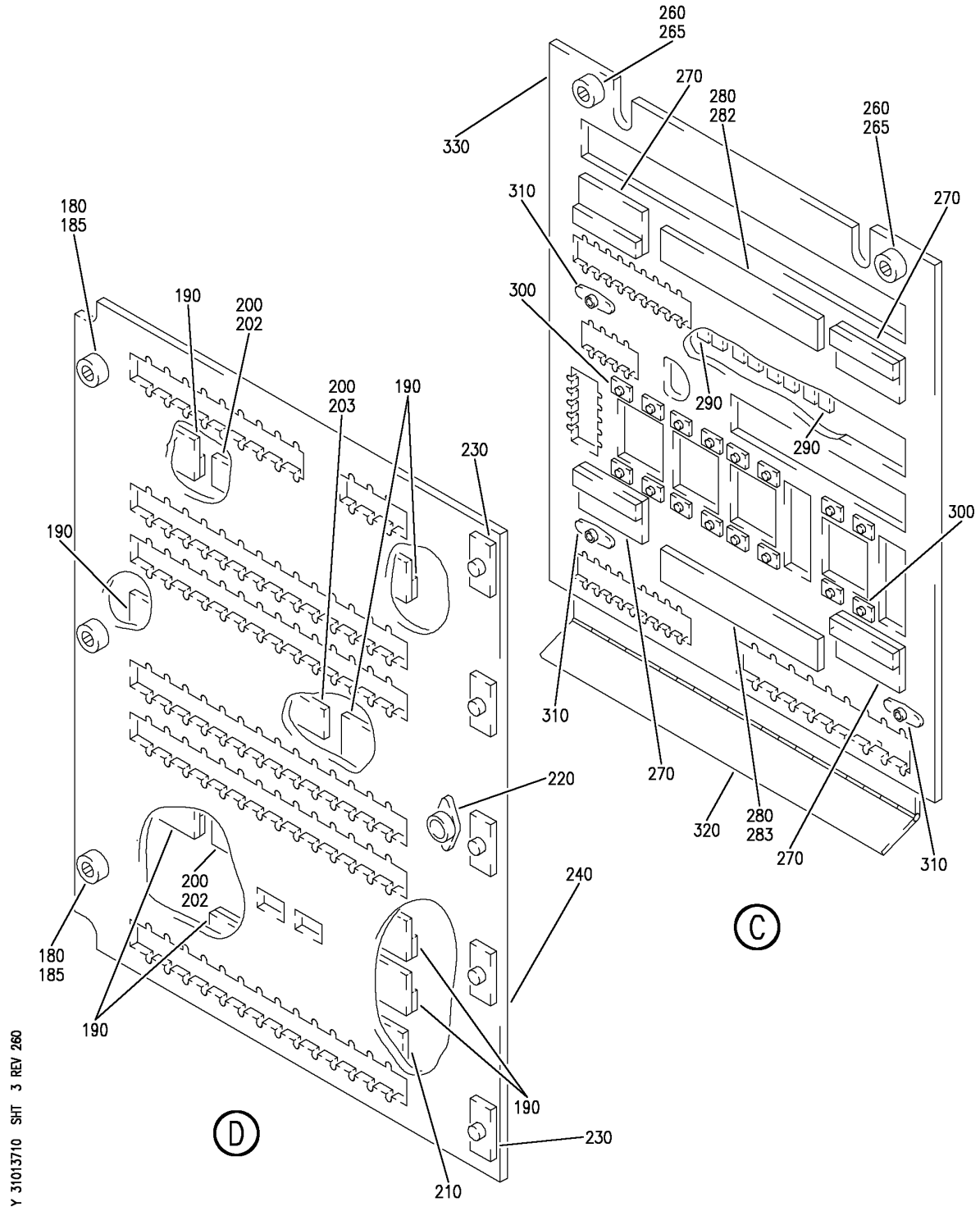

PANEL INSTL-P37 R MISC RELAY (E/E PANELS ONLY)
FIGURE 10 (SHEET 3)

BOEING PROPRIETARY - Copyright © - Unpublished Work - See title page for details.

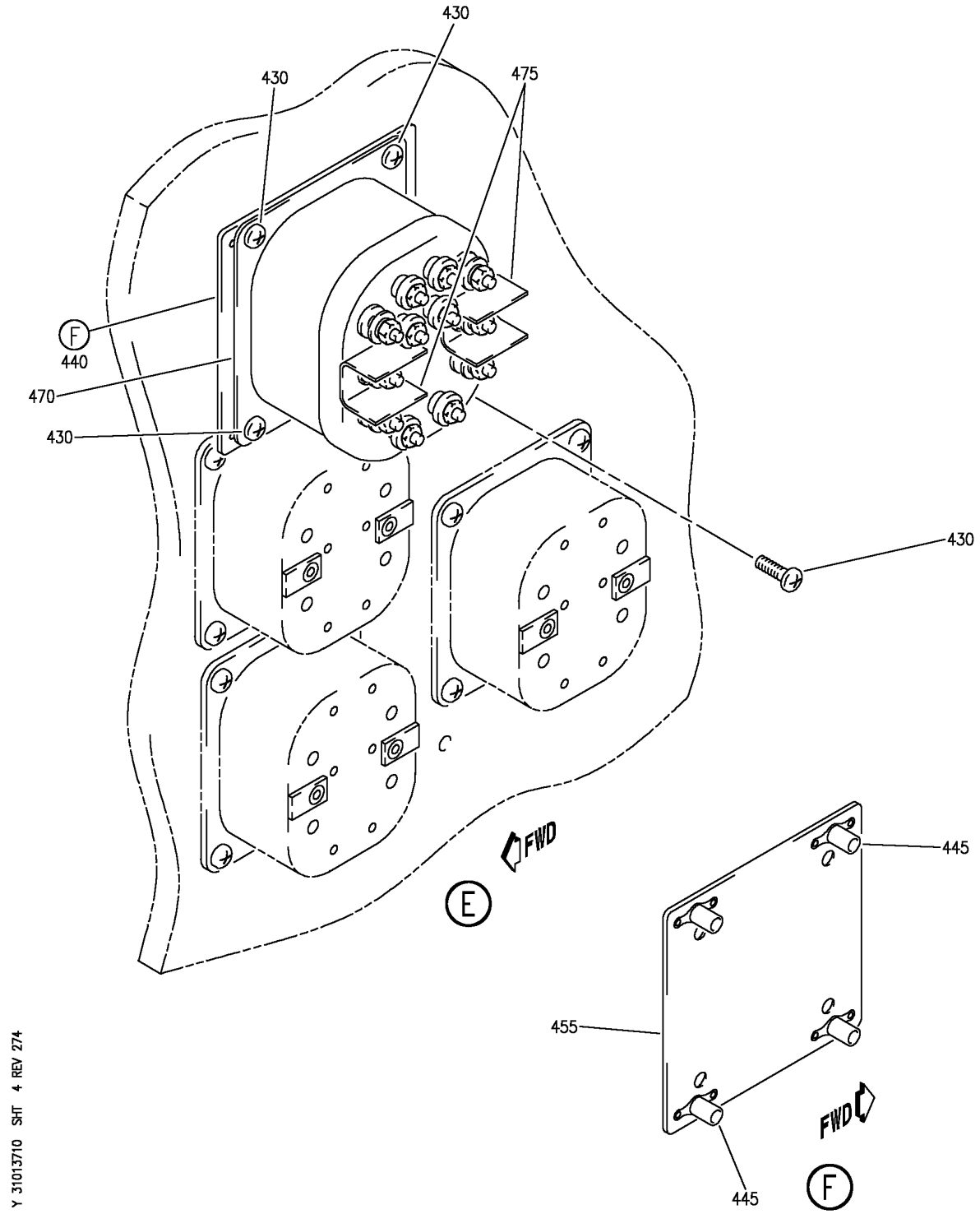

PANEL INSTL-P37 R MISC RELAY (E/E PANELS ONLY)
FIGURE 10 (SHEET 4)

BOEING PROPRIETARY - Copyright © - Unpublished Work - See title page for details.

FIG ITEM	PART NUMBER	1 2 3 4 5 6 7 NOMENCLATURE	EFFECT FROM TO	UNITS PER ASSY
10				
		PANEL INSTL-P37 R MISC	103106	
		RELAY (E/E PANELS ONLY)	108120	
- 1	MODREF185037	PANEL INSTL-P37 R MISC	106106	1
		RELAY (E/E PANELS ONLY)		
		MODULE NUMBER:		
		284N1127-169 REV D		
		FOR OTHER SYS DETAILS SEE:		
		11-36-12-02A		
		21-25-71-02D		
		21-44-71-02D		
		21-45-31-01D		
		21-51-55-01D		
		21-58-71-02D		
		21-61-71-02D		
		23-31-51-05		
		24-21-51-05		
		24-51-01-02		
		24-51-02-03		
		24-51-58-02D		
		27-62-71-03D		
		28-22-71-03D		
		29-21-71-01D		
		30-11-71-02D		
		30-21-71-03D		
		30-31-71-02D		
		30-32-71-02D		
		30-33-71-02D		
		30-34-51-01D		
		31-31-71-02D		
		32-09-02-04D		
		32-42-71-02D		
		32-61-71-02D		
		33-43-55-01D		
		33-51-71-01D		
		34-12-71-02D		
		34-25-50-01D		
		34-61-52-01D		
		35-21-71-02D		
		36-11-71-02D		
		38-15-71-02D		
		73-21-55-01D		
		74-31-71-02D		
		76-11-71-02D		
		77-12-71-01D		
		78-34-71-02D		
		78-36-71-02D		
		80-11-71-02D		

MISSING ITEM NUMBERS NOT APPLICABLE

- ITEM NOT ILLUSTRATED

BOEING PROPRIETARY - Copyright © - Unpublished Work - See title page for details.

FIG ITEM	PART NUMBER	1 2 3 4 5 6 7 NOMENCLATURE	EFFECT FROM TO	UNITS PER ASSY
10				
- 3	284N1127-118	PANEL INSTL-P37 R MISC RELAY (E/E PANELS ONLY) FOR NHA/OTHER SYS DET SEE: 24-00-58-05C	108108	RF
- 4	284N1127-139	PANEL INSTL-P37 R MISC RELAY (E/E PANELS ONLY) FOR NHA/OTHER SYS DET SEE: 24-00-58-05C	109120	RF

MISSING ITEM NUMBERS NOT APPLICABLE

- ITEM NOT ILLUSTRATED

BOEING PROPRIETARY - Copyright © - Unpublished Work - See title page for details.

FIG ITEM	PART NUMBER	1 2 3 4 5 6 7 NOMENCLATURE	EFFECT FROM TO	UNITS PER ASSY
10				
- 8	MODREF31945	PANEL INSTL-P37 R MISC RELAY (E/E PANELS ONLY) MODULE NUMBER: 284N1127-169 REV B FOR OTHER SYS DETAILS SEE: 11-36-12-02A 21-25-71-02D 21-44-71-02D 21-45-31-01D 21-51-55-01D 21-58-71-02D 21-61-71-02D 23-31-51-05 24-21-51-05 24-51-01-02 24-51-02-03 24-51-58-02D 27-62-71-03D 28-22-71-03D 29-21-71-01D 30-11-71-02D 30-21-71-03D 30-31-71-02D 30-32-71-02D 30-33-71-02D 30-34-51-01D 31-31-71-02D 32-09-02-04D 32-42-71-02D 32-61-71-02D 33-43-55-01D 33-51-71-01D 34-12-71-02D 34-25-50-01D 34-61-52-01D 35-21-71-02D 36-11-71-02D 38-15-71-02D 73-21-55-01D 74-31-71-02D 76-11-71-02D 77-12-71-01D 78-34-71-02D 78-36-71-02D 80-11-71-02D	103103	1

MISSING ITEM NUMBERS NOT APPLICABLE

- ITEM NOT ILLUSTRATED

BOEING PROPRIETARY - Copyright © - Unpublished Work - See title page for details.

FIG ITEM	PART NUMBER	1 2 3 4 5 6 7 NOMENCLATURE	EFFECT FROM TO	UNITS PER ASSY
10				
- 9	MODREF34305	PANEL INSTL-P37 R MISC RELAY (E/E PANELS ONLY) MODULE NUMBER: 284N1127-169 REV C FOR OTHER SYS DETAILS SEE: 11-36-12-02A 21-25-71-02D 21-44-71-02D 21-45-31-01D 21-51-55-01D 21-58-71-02D 21-61-71-02D 23-31-51-05 24-21-51-05 24-51-01-02 24-51-02-03 24-51-58-02D 27-62-71-03D 28-22-71-03D 29-21-71-01D 30-11-71-02D 30-21-71-03D 30-31-71-02D 30-32-71-02D 30-33-71-02D 30-34-51-01D 31-31-71-02D 32-09-02-04D 32-42-71-02D 32-61-71-02D 33-43-55-01D 33-51-71-01D 34-12-71-02D 34-25-50-01D 34-61-52-01D 35-21-71-02D 36-11-71-02D 38-15-71-02D 73-21-55-01D 74-31-71-02D 76-11-71-02D 77-12-71-01D 78-34-71-02D 78-36-71-02D 80-11-71-02D	104105	1
10	BAC27NEX0173	.DECAL- PLACARD CONTENT: A	103106 108120	2

MISSING ITEM NUMBERS NOT APPLICABLE

– ITEM NOT ILLUSTRATED

BOEING PROPRIETARY - Copyright © - Unpublished Work - See title page for details.

FIG ITEM	PART NUMBER	1 2 3 4 5 6 7 NOMENCLATURE	EFFECT FROM TO	UNITS PER ASSY
10				
12	BAC27NEX2344	.DECAL-	103106	1
		PLACARD CONTENT:	108120	
		P37 RIGHT MISCELLANEOUS		
		ELECTRICAL EQUIPMENT		
15	BAC27NEX0174	.DECAL-	103106	2
		PLACARD CONTENT:	108120	
		B		
20	BAC27NEX0265	.DECAL-	103106	5
		PLACARD CONTENT:	108120	
		1 THRU 26		
25	BAC27NEX0264	.DECAL-	103106	1
		PLACARD CONTENT:	108120	
		1 THRU 11		
30	BAC27NEX0175	.DECAL-	103106	2
		PLACARD CONTENT:	108120	
		C		
35	BAC27NEX0935	.DECAL-	103106	1
		PLACARD CONTENT:	108120	
		1 THRU 28		
40	BAC27NEX0247	.DECAL-	103106	1
		PLACARD CONTENT:	108120	
		E		
45	BAC27NEX1593	.DECAL-	103106	1
		PLACARD CONTENT:	108120	
		1 THRU 43		
50	BAC27NEX0248	.DECAL-	103106	1
		PLACARD CONTENT:	108120	
		F		
51	BAC27NEX1642	.DECAL-	103106	1
		PLACARD CONTENT:	108120	
		1 THRU 20		
54	TTVF2525WE10	.TAPE	103106	AR
		SUPPLIER CODE:		
		VOKW00		
		SPECIFICATION NUMBER:		
		BACT19J3		
		OPTIONAL PART:		
		THT11-437W10		
		V85480		
55	TTVF2525WE10	.TAPE	103106	AR
		SUPPLIER CODE:		
		VOKW00		
		SPECIFICATION NUMBER:		
		BACT19J3		
		OPTIONAL PART:		
		THT11-437W10		
		V85480		

MISSING ITEM NUMBERS NOT APPLICABLE

– ITEM NOT ILLUSTRATED

BOEING PROPRIETARY - Copyright © - Unpublished Work - See title page for details.

FIG ITEM	PART NUMBER	1 2 3 4 5 6 7 NOMENCLATURE	EFFECT FROM TO	UNITS PER ASSY
10				
56	TTVF2525WE10	.TAPE	108120	AR
		SUPPLIER CODE:		
		V0KW00		
		SPECIFICATION NUMBER:		
		BACT19J3		
		OPTIONAL PART:		
		THT11-437W10		
		V85480		
59	33-32683-6P1	.LIGHT-LIGHT	103106	1
		SUPPLIER CODE:	108120	
		V79692		
		ELECTRICAL EQUIP NUMBER:		
		L00373		
60	NAS1801-4-8	.SCREW-	103103	3
			108120	
60	BACS12HN4-8	.SCREW-	104106	3
65	NAS1149D0416J	.WASHER	103106	9
			108120	
70	NAS1149D0463J	.WASHER	103106	4
			108120	
75	PLH54CD	.NUT-	104106	6
		SUPPLIER CODE:		
		VF0224		
		SPECIFICATION NUMBER:		
		BACN10YR4CD		
		OPTIONAL PART:		
		H52732-4CD		
		V15653		
75	MS21042L4	.NUT-	103103	6
			108120	
80	287N1404-9	.JUMPER ASSY	103106	1
			108120	
85	287N1404-12	.JUMPER ASSY	103106	1
			108120	
90	287N1404-22	.JUMPER ASSY	103106	1
			108120	
95	287N1404-23	.JUMPER ASSY	103106	1
			108120	
100	RBEJ40E20-24	.JUMPER	103106	2
		SUPPLIER CODE:	108120	
		V1GK47		
		SPECIFICATION NUMBER:		
		BACJ40E20-24		
		OPTIONAL PART:		
		740E20-24		
		V91812		

MISSING ITEM NUMBERS NOT APPLICABLE

– ITEM NOT ILLUSTRATED

BOEING PROPRIETARY - Copyright © - Unpublished Work - See title page for details.

FIG ITEM	PART NUMBER	1 2 3 4 5 6 7 NOMENCLATURE	EFFECT FROM TO	UNITS PER ASSY
10				
105	H49-2	.CLAMP	103106	18
		SUPPLIER CODE:	108120	
		V34941		
		SPECIFICATION NUMBER:		
		BACC49A2		
		OPTIONAL PART:		
		MF104-2		
		V6E102		
110	AMY0700T5	.TRACK-	103106	1
		SUPPLIER CODE:	108120	
		V09922		
		SPECIFICATION NUMBER:		
		BACT44B0700U		
		ELECTRICAL EQUIP NUMBER:		
		TB0177		
115	AMY1400T5	.TRACK-	103106	1
		SUPPLIER CODE:	108120	
		V09922		
		SPECIFICATION NUMBER:		
		BACT44B1400U		
		ELECTRICAL EQUIP NUMBER:		
		TB0178		
120	NAS600-6P	.SCREW-	108120	3
127	BACS12CK04-8	.SCREW-	103106	5
130	MS3373B2	.STRIP	108120	AR
135	MS3373A2	.STRIP	108120	AR
146	MS3373B2	.STRIP	103106	AR
147	MS3373A2	.STRIP	103106	AR
150	MS18029-2S12	.COVER ASSY	108120	1
155	MS27212-2-12	.TERMINAL BOARD ASSY-	108120	1
		ELECTRICAL EQUIP NUMBER:		
		TB5070		
		WIRING DIAGRAM REF:		
		243241		
156	MS18029-2S14	.COVER ASSY	103106	1
157	MS27212-2-14	.TERMINAL BOARD ASSY-	103106	1
		ELECTRICAL EQUIP NUMBER:		
		TB5070		
		WIRING DIAGRAM REF:		
		243241		
166	MS18029-2S8	.COVER ASSY-	103106	1
167	MS27212-2-8	.BOARD ASSY-	103106	1
		ELECTRICAL EQUIP NUMBER:		
		TB5071		
		WIRING DIAGRAM REF:		
		910400		
170	284N1126-46	.PLATE ASSY-MTG	103106	1
			108120	

MISSING ITEM NUMBERS NOT APPLICABLE

– ITEM NOT ILLUSTRATED

BOEING PROPRIETARY - Copyright © - Unpublished Work - See title page for details.

FIG ITEM	PART NUMBER	1 2 3 4 5 6 7 NOMENCLATURE	EFFECT FROM TO	UNITS PER ASSY
10				
		ATTACHING PARTS		
- 175	NAS603-7P	.SCREW-	103103 108120	5
- 175	BACS12CK3-7	.SCREW-	104106	5
		-------*-------		
180	BACS21Y4R	..STUD ASSY	103106 108120	3
185	1127700	..WASHER	103106 108120	3
		SUPPLIER CODE:		
		V60119		
		SPECIFICATION NUMBER:		
		BACW10X4		
		OPTIONAL PART:		
		2600LW		
		V71286		
190	YHLZG16-1	..BLOCK-GND	103106 108120	8
		SUPPLIER CODE:		
		V09922		
		ELECTRICAL EQUIP NUMBER:		
		GD01700		
		GD01701		
		GD01702		
		GD01703		
		GD01704		
		GD01705		
		GD03447		
		GD01706		
		ATTACHING PARTS		
- 195	BACR15FT5D	..RIVET-	103106 108120	32
		SIZE DETERMINED ON INSTL.		
		-------*-------		
200	AMY0625T5	..TRACK-	103106 108120	3
		SUPPLIER CODE:		
		V09922		
		SPECIFICATION NUMBER:		
		BACT44B0625U		
		ELECTRICAL EQUIP NUMBER:		
		TB0170		
		TB0171		
		TB0179		
		ATTACHING PARTS		
- 205	BACR15BA4D	..RIVET-	103106 108120	12
		SIZE DETERMINED ON INSTL.		
		-------*-------		

MISSING ITEM NUMBERS NOT APPLICABLE

- ITEM NOT ILLUSTRATED

BOEING PROPRIETARY - Copyright © - Unpublished Work - See title page for details.

FIG ITEM	PART NUMBER	1 2 3 4 5 6 7 NOMENCLATURE	EFFECT FROM TO	UNITS PER ASSY
10				
210	AMY0400T5	..TRACK-	103106	1
		SUPPLIER CODE:	108120	
		V09922		
		SPECIFICATION NUMBER:		
		BACT44B0400U		
		ELECTRICAL EQUIP NUMBER:		
		TB0180		
		ATTACHING PARTS		
- 215	BACR15BA4D	..RIVET-	103106	3
		SIZE DETERMINED ON INSTL.	108120	
		-------*-------		
220	BACN10TL3A3	..NUT	103106	1
			108120	
		ATTACHING PARTS		
- 225	BACR15FT4D	..RIVET-	103106	2
		SIZE DETERMINED ON INSTL.	108120	
		-------*-------		
230	MF53049-3	..NUTPLATE	103106	5
		SUPPLIER CODE:	108120	
		V15653		
		SPECIFICATION NUMBER:		
		BACN10JN3		
		OPTIONAL PART:		
		BRFM20A3		
		V52828		
		MF1000-3BAC		
		V15653		
		NS103218-02		
		V80539		
		RMF9201M3		
		V72962		
		VN252A02		
		V92215		
		T8124S3S		
		V11815		
		ATTACHING PARTS		
- 235	BACR15BA3AD	..RIVET-	103106	10
		SIZE DETERMINED ON INSTL.	108120	
		-------*-------		
240	284N1126-45	..PLATE	103106	1
			108120	
245	284N1126-48	.PLATE ASSY-MTG	103106	1
			108120	
		ATTACHING PARTS		
- 250	NAS603-7P	.SCREW-	103103	3
			108120	
- 250	BACS12CK3-7	.SCREW-	104106	3

MISSING ITEM NUMBERS NOT APPLICABLE

- ITEM NOT ILLUSTRATED

BOEING PROPRIETARY - Copyright © - Unpublished Work - See title page for details.

FIG ITEM	PART NUMBER	1 2 3 4 5 6 7 NOMENCLATURE	EFFECT FROM TO	UNITS PER ASSY
10				
- 255	NAS1149D0316H	.WASHER	103106 108120	3
		-------*-------		
260	BACS21Y4R	..STUD ASSY	103106 108120	2
265	1127700	..WASHER SUPPLIER CODE: V60119 SPECIFICATION NUMBER: BACW10X4 OPTIONAL PART: 2600LW V71286	103106 108120	2
270	YHLZG16-1	..BLOCK-GND SUPPLIER CODE: V09922 ELECTRICAL EQUIP NUMBER: GD01708 GD01709 GD01710 GD01711 ATTACHING PARTS	103106 108120	4
- 275	BACR15FT5D	..RIVET- SIZE DETERMINED ON INSTL. -------*-------	103106 108120	16
280	AMY0825T5	..TRACK- SUPPLIER CODE: V09922 SPECIFICATION NUMBER: BACT44B0825U ELECTRICAL EQUIP NUMBER: TB0172 TB0173 ATTACHING PARTS	103106 108120	2
- 285	BACR15BA4D	..RIVET- SIZE DETERMINED ON INSTL. -------*-------	103106 108120	8

MISSING ITEM NUMBERS NOT APPLICABLE

- ITEM NOT ILLUSTRATED

BOEING PROPRIETARY - Copyright © - Unpublished Work - See title page for details.

FIG ITEM	PART NUMBER	1 2 3 4 5 6 7 NOMENCLATURE	EFFECT FROM TO	UNITS PER ASSY
10				
290	MF53049-06	..NUTPLATE	103106	8
		SUPPLIER CODE:	108120	
		V15653		
		SPECIFICATION NUMBER:		
		BACN10JN06		
		OPTIONAL PART:		
		MF1000-06BAC		
		V15653		
		NS103218-62		
		V80539		
		RMF9201M62		
		V72962		
		VN252A62L		
		V92215		
		T8124S06S		
		V11815		
		BRFM20A06L		
		V52828		
		ATTACHING PARTS		
- 295	BACR15BA3AD	..RIVET-	103106	16
		SIZE DETERMINED ON INSTL.	108120	
		-------*-------		
300	MF53049-08	..NUT	103106	16
		SUPPLIER CODE:	108120	
		V15653		
		SPECIFICATION NUMBER:		
		BACN10JN08		
		OPTIONAL PART:		
		BRFM20A08		
		V52828		
		MF1000-08BAC		
		V15653		
		NS103218-82		
		V80539		
		RMF9201M82		
		V72962		
		VN252A82		
		V92215		
		T8124S08S		
		V11815		
		ATTACHING PARTS		
- 305	BACR15BA3AD	..RIVET-	103106	32
		SIZE DETERMINED ON INSTL.	108120	
		-------*-------		
310	BACN10TL3A3	..NUT	103106	3
			108120	

MISSING ITEM NUMBERS NOT APPLICABLE

- ITEM NOT ILLUSTRATED

BOEING PROPRIETARY - Copyright © - Unpublished Work - See title page for details.

FIG ITEM	PART NUMBER	1 2 3 4 5 6 7 NOMENCLATURE	EFFECT FROM TO	UNITS PER ASSY
10				
		ATTACHING PARTS		
- 315	BACR15FT4AD	..RIVET-	103106	6
		SIZE DETERMINED ON INSTL.	108120	
		-------*-------		
320	284N1126-11	..HINGE-	103106	1
		ALTERED FROM PART NUMBER:	108120	
		MS20001P9-1300		
		MANUFACTURED FROM:		
		MS20001P9-1300		
		ATTACHING PARTS		
- 325	BACR15BB4D	..RIVET-	103106	5
		SIZE DETERMINED ON INSTL.	108120	
		-------*-------		
330	284N1126-47	..PLATE	103106	1
			108120	
335	284N1126-40	.PLATE ASSY-MTG	103106	1
			108120	
		ATTACHING PARTS		
- 340	NAS603-7P	.SCREW-	103103	3
			108120	
- 340	BACS12CK3-7	.SCREW-	104106	3
- 345	NAS1149D0316H	.WASHER	103106	3
			108120	
		-------*-------		
350	BACS21Y4R	..STUD ASSY	103106	2
			108120	
355	1127700	..WASHER	103106	2
		SUPPLIER CODE:	108120	
		V60119		
		SPECIFICATION NUMBER:		
		BACW10X4		
		OPTIONAL PART:		
		2600LW		
		V71286		
360	BACT44B1000U	..TRACK-	103106	1
		ELECTRICAL EQUIP NUMBER:	108120	
		TB0174		
		ATTACHING PARTS		
- 365	BACR15BB4AD	..RIVET-	103106	5
		SIZE DETERMINED ON INSTL.	108120	
		-------*-------		
370	YHLZG16-1	..BLOCK-GND	103106	4
		SUPPLIER CODE:	108120	
		V09922		
		ELECTRICAL EQUIP NUMBER:		
		GD01712		
		GD01713		
		GD01714		
		GD01715		

MISSING ITEM NUMBERS NOT APPLICABLE

- ITEM NOT ILLUSTRATED

BOEING PROPRIETARY - Copyright © - Unpublished Work - See title page for details.

FIG ITEM	PART NUMBER	1 2 3 4 5 6 7 NOMENCLATURE	EFFECT FROM TO	UNITS PER ASSY
10				
		ATTACHING PARTS		
- 375	BACR15FT5AD	..RIVET-	103106	16
		SIZE DETERMINED ON INSTL.	108120	
		-------*-------		
380	MF53049-06	..NUTPLATE	103106	6
		SUPPLIER CODE:	108120	
		V15653		
		SPECIFICATION NUMBER:		
		BACN10JN06		
		OPTIONAL PART:		
		MF1000-06BAC		
		V15653		
		NS103218-62		
		V80539		
		RMF9201M62		
		V72962		
		VN252A62L		
		V92215		
		T8124S06S		
		V11815		
		BRFM20A06L		
		V52828		
		ATTACHING PARTS		
- 385	BACR15BA3AD	..RIVET-	103106	12
		SIZE DETERMINED ON INSTL.	108120	
		-------*-------		
390	WSI4A8	..NUT	103106	1
		SUPPLIER CODE:	108120	
		V04169		
		SPECIFICATION NUMBER:		
		BACN10TL3A8		
		ATTACHING PARTS		
- 395	BACR15BB4AD	..RIVET-	103106	2
		SIZE DETERMINED ON INSTL.	108120	
		-------*-------		
400	BACN10TL3A3	..NUT	103106	1
			108120	
		ATTACHING PARTS		
- 405	BACR15BB4AD	..RIVET-	103106	2
		SIZE DETERMINED ON INSTL.	108120	
		-------*-------		
410	284N1126-11	..HINGE-	103106	1
		ALTERED FROM PART NUMBER:	108120	
		MS20001P9-1300		
		MANUFACTURED FROM:		
		MS20001P9-1300		

MISSING ITEM NUMBERS NOT APPLICABLE

- ITEM NOT ILLUSTRATED

BOEING PROPRIETARY - Copyright © - Unpublished Work - See title page for details.

FIG ITEM	PART NUMBER	1 2 3 4 5 6 7 NOMENCLATURE	EFFECT FROM TO	UNITS PER ASSY
10				
		ATTACHING PARTS		
- 415	BACR15BB4D	..RIVET-	103106	5
		SIZE DETERMINED ON INSTL.	108120	
		-------*-------		
420	284N1126-39	..PLATE	103106	1
			108120	
425	13341000-7	.ENCLOSURE ASSY-	103106	1
		SUPPLIER CODE:	108120	
		V23296		
- 500	286N1270-360	WIRE BUNDLE ASSY-	108120	RF
		REWORKED BY ALERT SB:		
		34A0222		
- 502	286N1270-602	WIRE BUNDLE ASSY	103106	RF
- 506	YHLZ2	.MODULE-	103106	3
		SUPPLIER CODE:	108120	
		V09922		
		SPECIFICATION NUMBER:		
		BACM15C1A		
		OPTIONAL PART:		
		YHLZ22		
		V09922		
		ELECTRICAL EQUIP NUMBER:		
		TB0177F		
		WIRING DIAGRAM REF:		
		215824		
- 515	YHLZ16-2	.MODULE-	103106	3
		SUPPLIER CODE:	108120	
		V09922		
		SPECIFICATION NUMBER:		
		BACM15C3A		
		OPTIONAL PART:		
		TBH120450		
		V58982		
		421120-450		
		V58982		
		ELECTRICAL EQUIP NUMBER:		
		TB0177X		
		WIRING DIAGRAM REF:		
		215824		

MISSING ITEM NUMBERS NOT APPLICABLE

- ITEM NOT ILLUSTRATED

BOEING PROPRIETARY - Copyright © - Unpublished Work - See title page for details.

FIG ITEM	PART NUMBER	1 2 3 4 5 6 7 NOMENCLATURE	EFFECT FROM TO	UNITS PER ASSY
10				
- 520	YHLZ16-4	.MODULE- SUPPLIER CODE: V09922 SPECIFICATION NUMBER: BACM15C3B OPTIONAL PART: 421120-452 V58982 TBH120452 V58982 ELECTRICAL EQUIP NUMBER: TB0177Y WIRING DIAGRAM REF: 214511 216151 292211	103106 108120	1
- 525	YHLZD33	.TERMINAL- SUPPLIER CODE: V09922 ELECTRICAL EQUIP NUMBER: TB0170A WIRING DIAGRAM REF: 212511 215812	103106 108120	3
- 532	YHLZ16-4	.MODULE- SUPPLIER CODE: V09922 SPECIFICATION NUMBER: BACM15C3B OPTIONAL PART: 421120-452 V58982 TBH120452 V58982 ELECTRICAL EQUIP NUMBER: TB0170Y WIRING DIAGRAM REF: 215812 216111	103106 108120	3

MISSING ITEM NUMBERS NOT APPLICABLE

- ITEM NOT ILLUSTRATED

BOEING PROPRIETARY - Copyright © - Unpublished Work - See title page for details.

FIG ITEM	PART NUMBER	1 2 3 4 5 6 7 NOMENCLATURE	EFFECT FROM TO	UNITS PER ASSY
10				
- 535	YHLZ16-8	.MODULE- SUPPLIER CODE: V09922 SPECIFICATION NUMBER: BACM15C3C OPTIONAL PART: 421120-454 V58982 TBH120454 V58982 ELECTRICAL EQUIP NUMBER: TB0170Z WIRING DIAGRAM REF: 216111 216121 320912	103106 108120	2
- 541	YHLZ16-8	.MODULE- SUPPLIER CODE: V09922 SPECIFICATION NUMBER: BACM15C3C OPTIONAL PART: 421120-454 V58982 TBH120454 V58982 ELECTRICAL EQUIP NUMBER: TB0171Z WIRING DIAGRAM REF: 320912 320922	103106 108120	3
- 546	YHLZ16-4	.MODULE- SUPPLIER CODE: V09922 SPECIFICATION NUMBER: BACM15C3B OPTIONAL PART: 421120-452 V58982 TBH120452 V58982 ELECTRICAL EQUIP NUMBER: TB0171Y WIRING DIAGRAM REF: 270912	103106	2

MISSING ITEM NUMBERS NOT APPLICABLE

- ITEM NOT ILLUSTRATED

BOEING PROPRIETARY - Copyright © - Unpublished Work - See title page for details.

FIG ITEM	PART NUMBER	1 2 3 4 5 6 7 NOMENCLATURE	EFFECT FROM TO	UNITS PER ASSY
10				
- 547	YHLZ16-4	.MODULE- SUPPLIER CODE: V09922 SPECIFICATION NUMBER: BACM15C3B OPTIONAL PART: 421120-452 V58982 TBH120452 V58982 ELECTRICAL EQUIP NUMBER: TB0171Y WIRING DIAGRAM REF: 270912 320912	108120	1
- 548	YHLZD33	.TERMINAL- SUPPLIER CODE: V09922 ELECTRICAL EQUIP NUMBER: TB0179A WIRING DIAGRAM REF: 216121 303112	103106	8
- 550	YHLZD33	.TERMINAL- SUPPLIER CODE: V09922 ELECTRICAL EQUIP NUMBER: TB0179A WIRING DIAGRAM REF: 216121 303112	108120	7
- 557	YHLZ16-4	.MODULE- SUPPLIER CODE: V09922 SPECIFICATION NUMBER: BACM15C3B OPTIONAL PART: 421120-452 V58982 TBH120452 V58982 ELECTRICAL EQUIP NUMBER: TB0179Y WIRING DIAGRAM REF: 216111 302111 335111	103106 108120	2

MISSING ITEM NUMBERS NOT APPLICABLE

- ITEM NOT ILLUSTRATED

BOEING PROPRIETARY - Copyright © - Unpublished Work - See title page for details.

FIG ITEM	PART NUMBER	1 2 3 4 5 6 7 NOMENCLATURE	EFFECT FROM TO	UNITS PER ASSY
10				
- 560	YHLZ16-8	.MODULE- SUPPLIER CODE: V09922 SPECIFICATION NUMBER: BACM15C3C OPTIONAL PART: 421120-454 V58982 TBH120454 V58982 ELECTRICAL EQUIP NUMBER: TB0179Z WIRING DIAGRAM REF: 216111	103106 108120	2
- 567	YHLZD33	.TERMINAL- SUPPLIER CODE: V09922 ELECTRICAL EQUIP NUMBER: TB0180A WIRING DIAGRAM REF: 783461	103106 108120	1
- 570	YHLZ16-8	.MODULE- SUPPLIER CODE: V09922 SPECIFICATION NUMBER: BACM15C3C OPTIONAL PART: 421120-454 V58982 TBH120454 V58982 ELECTRICAL EQUIP NUMBER: TB0180Z WIRING DIAGRAM REF: 215123	103106 108120	1
- 575	YHLZD33	.TERMINAL- SUPPLIER CODE: V09922 ELECTRICAL EQUIP NUMBER: TB0172A WIRING DIAGRAM REF: 215812	103106 108120	1

MISSING ITEM NUMBERS NOT APPLICABLE

– ITEM NOT ILLUSTRATED

BOEING PROPRIETARY - Copyright © - Unpublished Work - See title page for details.

FIG ITEM	PART NUMBER	1 2 3 4 5 6 7 NOMENCLATURE	EFFECT FROM TO	UNITS PER ASSY
10				
- 581	YHLZ4	.MODULE- SUPPLIER CODE: V09922 SPECIFICATION NUMBER: BACM15C1B OPTIONAL PART: YHLZ44 V09922 ELECTRICAL EQUIP NUMBER: TB0172G WIRING DIAGRAM REF: 352111	103106 108120	5
- 590	YHLZ16-4	.MODULE- SUPPLIER CODE: V09922 SPECIFICATION NUMBER: BACM15C3B OPTIONAL PART: 421120-452 V58982 TBH120452 V58982 ELECTRICAL EQUIP NUMBER: TB0172Y WIRING DIAGRAM REF: 215813 245171	103106 108120	1
- 593	YHLZD33	.TERMINAL- SUPPLIER CODE: V09922 ELECTRICAL EQUIP NUMBER: TB0173A WIRING DIAGRAM REF: 292211	108120	4
- 595	YHLZD33	.TERMINAL- SUPPLIER CODE: V09922 ELECTRICAL EQUIP NUMBER: TB0173A WIRING DIAGRAM REF: 292211	103106	5
- 605	YHLZR17	.COMPONENT- SUPPLIER CODE: V09922 ELECTRICAL EQUIP NUMBER: TB0173B WIRING DIAGRAM REF: 276211	103106 108120	1

MISSING ITEM NUMBERS NOT APPLICABLE

- ITEM NOT ILLUSTRATED

BOEING PROPRIETARY - Copyright © - Unpublished Work - See title page for details.

FIG ITEM	PART NUMBER	1 2 3 4 5 6 7 NOMENCLATURE	EFFECT FROM TO	UNITS PER ASSY
10				
- 615	YHLZ16-4	.MODULE- SUPPLIER CODE: V09922 SPECIFICATION NUMBER: BACM15C3B OPTIONAL PART: 421120-452 V58982 TBH120452 V58982 ELECTRICAL EQUIP NUMBER: TB0173Y WIRING DIAGRAM REF: 276211	103106	4
- 617	YHLZ16-4	.MODULE- SUPPLIER CODE: V09922 SPECIFICATION NUMBER: BACM15C3B OPTIONAL PART: 421120-452 V58982 TBH120452 V58982 ELECTRICAL EQUIP NUMBER: TB0173Y WIRING DIAGRAM REF: 276211	108120	5
- 620	YHLZ16-8	.MODULE- SUPPLIER CODE: V09922 SPECIFICATION NUMBER: BACM15C3C OPTIONAL PART: 421120-454 V58982 TBH120454 V58982 ELECTRICAL EQUIP NUMBER: TB0173Z WIRING DIAGRAM REF: 361141	103106 108120	1

MISSING ITEM NUMBERS NOT APPLICABLE

- ITEM NOT ILLUSTRATED

BOEING PROPRIETARY - Copyright © - Unpublished Work - See title page for details.

FIG ITEM	PART NUMBER	1 2 3 4 5 6 7 NOMENCLATURE	EFFECT FROM TO	UNITS PER ASSY
10				
- 627	YHLZD33	.TERMINAL- SUPPLIER CODE: V09922 ELECTRICAL EQUIP NUMBER: TB0174A WIRING DIAGRAM REF: 783621 801121	103106 108120	5
-627A	YHLZD40	.TERMINAL- SUPPLIER CODE: V09922 ELECTRICAL EQUIP NUMBER: TB0174B WIRING DIAGRAM REF: 761112	103106 108120	1
- 637	YHLZ16-4	.MODULE- SUPPLIER CODE: V09922 SPECIFICATION NUMBER: BACM15C3B OPTIONAL PART: 421120-452 V58982 TBH120452 V58982 ELECTRICAL EQUIP NUMBER: TB0174Y WIRING DIAGRAM REF: 301111 771242 801121	103106 108120	3
- 645	YHLZD33	.TERMINAL- SUPPLIER CODE: V09922 ELECTRICAL EQUIP NUMBER: TB0178A WIRING DIAGRAM REF: 215812	103106 108120	5

MISSING ITEM NUMBERS NOT APPLICABLE

- ITEM NOT ILLUSTRATED

BOEING PROPRIETARY - Copyright © - Unpublished Work - See title page for details.

FIG ITEM	PART NUMBER	1 2 3 4 5 6 7 NOMENCLATURE	EFFECT FROM TO	UNITS PER ASSY
10				
- 650	YHLZ4	.MODULE-	103106	2
		SUPPLIER CODE:	108120	
		V09922		
		SPECIFICATION NUMBER:		
		BACM15C1B		
		OPTIONAL PART:		
		YHLZ44		
		V09922		
		ELECTRICAL EQUIP NUMBER:		
		TB0178G		
		WIRING DIAGRAM REF:		
		282211		
		303311		
- 655	YHLZ16-2	.MODULE-	103106	1
		SUPPLIER CODE:	108120	
		V09922		
		SPECIFICATION NUMBER:		
		BACM15C3A		
		OPTIONAL PART:		
		TBH120450		
		V58982		
		421120-450		
		V58982		
		ELECTRICAL EQUIP NUMBER:		
		TB0178X		
		WIRING DIAGRAM REF:		
		215813		
		732142		
		761121		
- 663	YHLZ16-4	.MODULE-	103106	7
		SUPPLIER CODE:	108120	
		V09922		
		SPECIFICATION NUMBER:		
		BACM15C3B		
		OPTIONAL PART:		
		421120-452		
		V58982		
		TBH120452		
		V58982		
		ELECTRICAL EQUIP NUMBER:		
		TB0178Y		
		WIRING DIAGRAM REF:		
		214511		
		313101		
		732142		

MISSING ITEM NUMBERS NOT APPLICABLE

- ITEM NOT ILLUSTRATED

BOEING PROPRIETARY - Copyright © - Unpublished Work - See title page for details.

FIG ITEM	PART NUMBER	1 2 3 4 5 6 7 NOMENCLATURE	EFFECT FROM TO	UNITS PER ASSY
10				
- 670	YHLZ16-8	.MODULE- SUPPLIER CODE: V09922 SPECIFICATION NUMBER: BACM15C3C OPTIONAL PART: 421120-454 V58982 TBH120454 V58982 ELECTRICAL EQUIP NUMBER: TB0178Z WIRING DIAGRAM REF: 303211 361121	103106 108120	2
- 680	YHLZ4	.MODULE- SUPPLIER CODE: V09922 SPECIFICATION NUMBER: BACM15C1B OPTIONAL PART: YHLZ44 V09922 ELECTRICAL EQUIP NUMBER: TB0174G WIRING DIAGRAM REF: 753111	103106 108120	1
- 698	YHLZ4	.MODULE- SUPPLIER CODE: V09922 SPECIFICATION NUMBER: BACM15C1B OPTIONAL PART: YHLZ44 V09922 ELECTRICAL EQUIP NUMBER: TB0180G WIRING DIAGRAM REF: 783461	103106 108120	1

MISSING ITEM NUMBERS NOT APPLICABLE

- ITEM NOT ILLUSTRATED

BOEING PROPRIETARY - Copyright © - Unpublished Work - See title page for details.

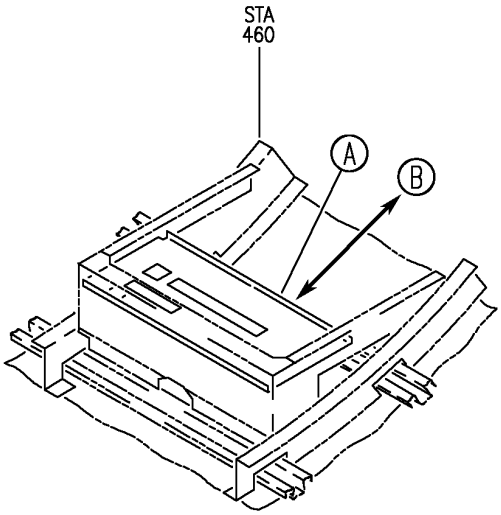

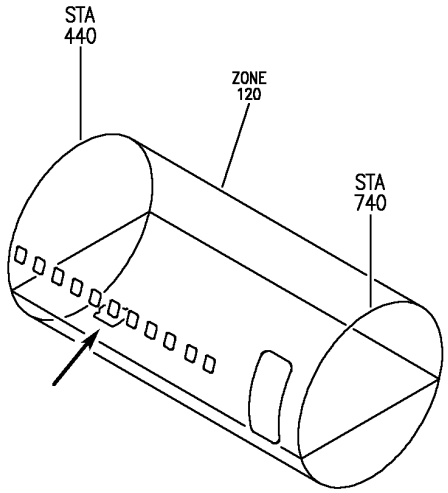

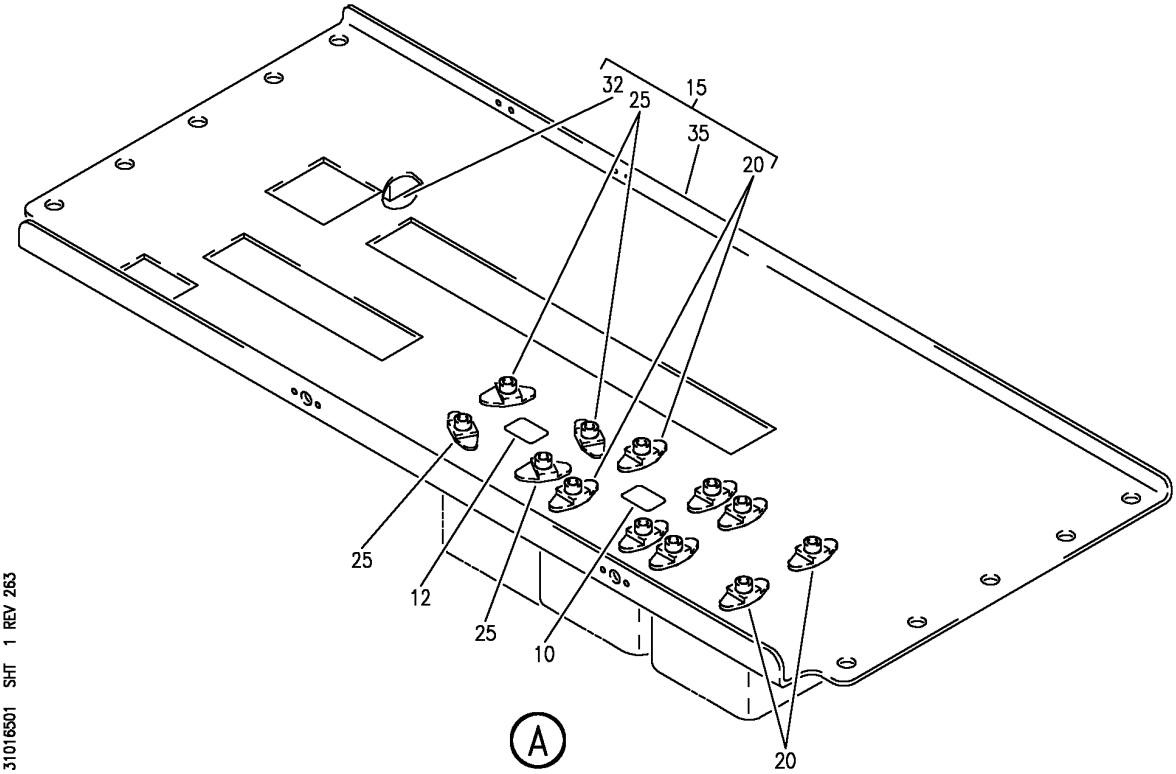

Y 31016501 SHT 1 REV 263

PANEL INSTL-P65 MISC RELAY (INDICATING/RECORDING SYSTEMS ONLY)
FIGURE 1 (SHEET 1)

BOEING PROPRIETARY - Copyright © - Unpublished Work - See title page for details.

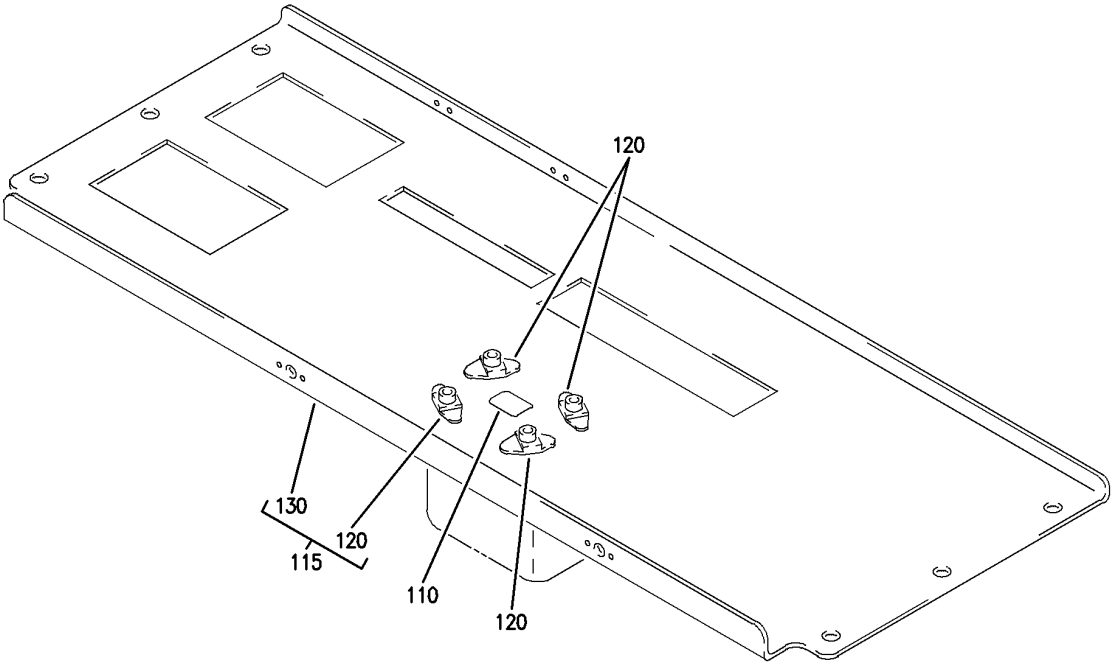

B

Y 31016501 SHT 2 REV 226

PANEL INSTL-P65 MISC RELAY (INDICATING/RECORDING SYSTEMS ONLY)
FIGURE 1 (SHEET 2)

BOEING PROPRIETARY - Copyright © - Unpublished Work - See title page for details.

FIG ITEM	PART NUMBER	1 2 3 4 5 6 7 NOMENCLATURE	EFFECT FROM TO	UNITS PER ASSY
1				
		PANEL INSTL-P65 MISC RELAY (INDICATING/RECORDING SYSTEMS ONLY)	103106 108120	
- 1	284N1747-406	PANEL INSTL-P65 MISC RELAY (INDICATING/RECORDING SYSTEMS ONLY) FOR NHA/OTHER SYS DET SEE: 24-00-58-05E	108120	RF
- 2	MODREF31315	PANEL INSTL-P65 MISC RELAY (INDICATING/RECORDING SYSTEMS ONLY) MODULE NUMBER: 284N1747-402 REV B FOR OTHER SYS DETAILS SEE: 33-37-52-01A 34-22-02-04 34-46-51-01A 38-32-35-01A 52-34-05-01	103105	1
- 2	MODREF34778	PANEL INSTL-P65 MISC RELAY (INDICATING/RECORDING SYSTEMS ONLY) MODULE NUMBER: 284N1747-402 REV C FOR OTHER SYS DETAILS SEE: 33-37-52-01A 34-22-02-04 34-46-51-01A 38-32-35-01A 52-34-05-01	106106	1
10	BAC27NEX1293	.DECAL- PLACARD CONTENT: P65	103106	1
12	BAC27NEX1293	.DECAL- PLACARD CONTENT: P65	108120	1
15	284N1748-9	.PANEL ASSY	108120	1
15	284N1748-13	.PANEL ASSY	103106	1

MISSING ITEM NUMBERS NOT APPLICABLE

- ITEM NOT ILLUSTRATED

BOEING PROPRIETARY - Copyright © - Unpublished Work - See title page for details.

FIG ITEM	PART NUMBER	1 2 3 4 5 6 7 NOMENCLATURE	EFFECT FROM TO	UNITS PER ASSY
1				
20	BRF200C3D	..NUTPLATE	103106	8
		SUPPLIER CODE:	108120	
		V52828		
		SPECIFICATION NUMBER:		
		BACN10JR3CFD		
		OPTIONAL PART:		
		K51602-3BAC		
		V15653		
		NS202476-02		
		V80539		
		102F9201-3		
		V72962		
		T8092C1032CD		
		V11815		
25	BRF200C08D	..NUTPLATE	103106	4
		SUPPLIER CODE:	108120	
		V52828		
		SPECIFICATION NUMBER:		
		BACN10JR08CFD		
		OPTIONAL PART:		
		NS202476-82		
		V80539		
		102F9201-82		
		V72962		
		T8092C832CD		
		V11815		
		K51602-08BAC		
		V15653		
		ATTACHING PARTS		
- 30	BACR15BA3ADCD	..RIVET-	103106	24
		SIZE DETERMINED ON INSTL.	108120	
		-------*-------		
32	YHLZG16-1	..BLOCK-GND	103106	1
		SUPPLIER CODE:		
		V09922		
		ELECTRICAL EQUIP NUMBER:		
		GD3886		
		ATTACHING PARTS		
- 34	BACR15BB5ADC	..RIVET-	103106	4
		SIZE DETERMINED ON INSTL.		
		-------*-------		
35	284N1748-10	..PANEL	108120	1
35	284N1748-14	..PANEL	103106	1

MISSING ITEM NUMBERS NOT APPLICABLE

- ITEM NOT ILLUSTRATED

BOEING PROPRIETARY - Copyright © - Unpublished Work - See title page for details.

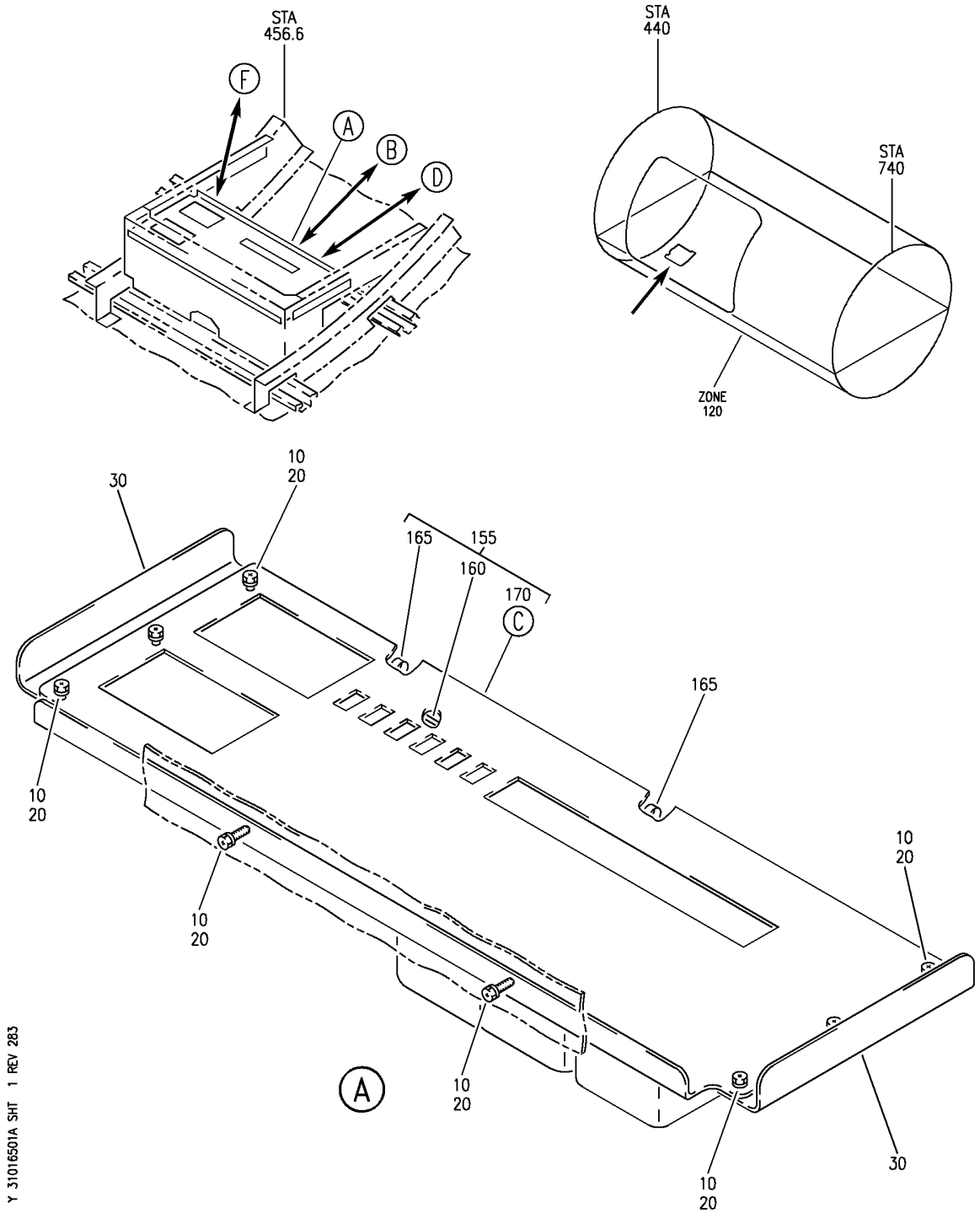

PANEL INSTL-P65 MISC ELECTRONICS EQPT CTR
FIGURE 1A (SHEET 1)

BOEING PROPRIETARY - Copyright © - Unpublished Work - See title page for details.

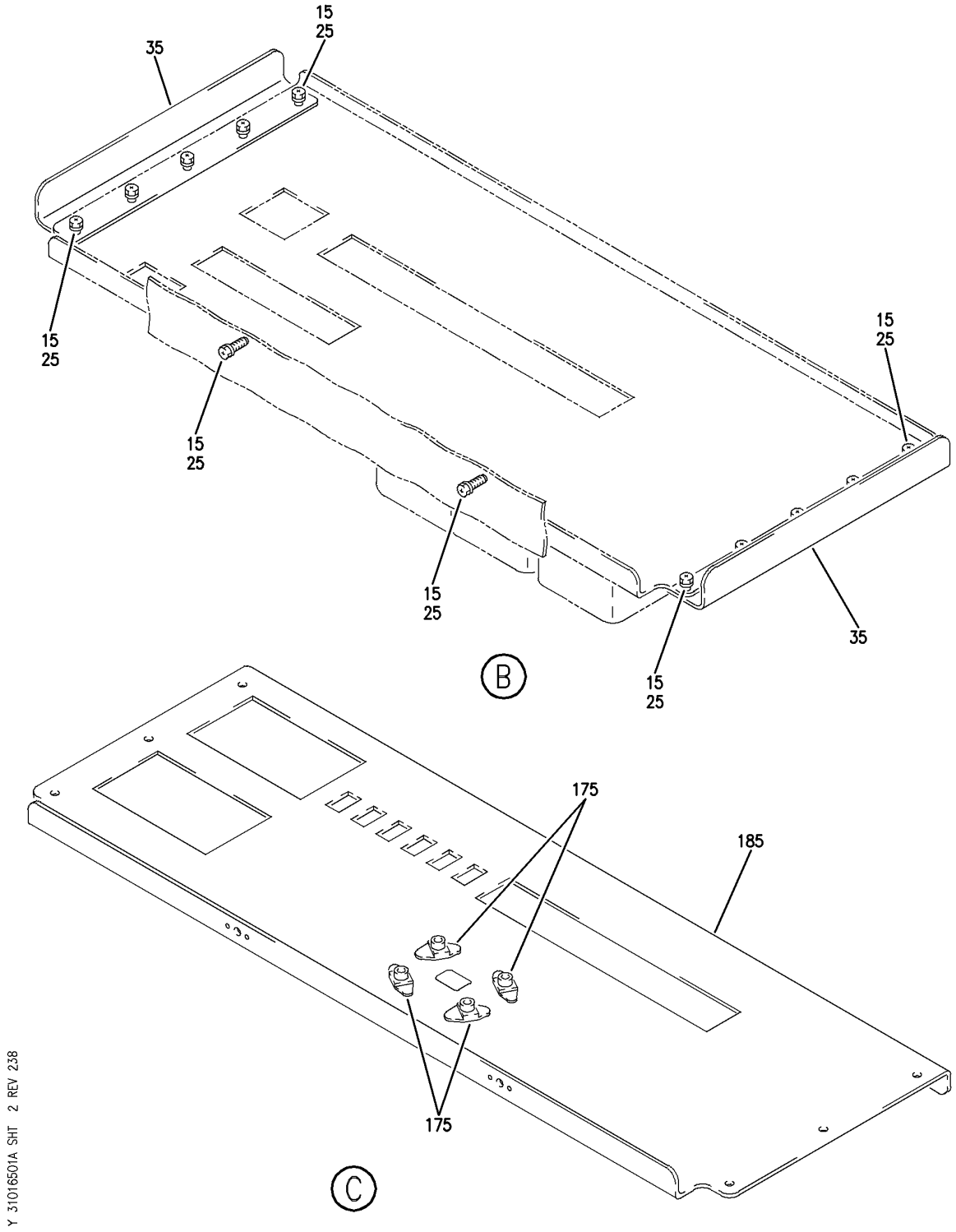

PANEL INSTL-P65 MISC ELECTRONICS EQPT CTR
FIGURE 1A (SHEET 2)

BOEING PROPRIETARY - Copyright © - Unpublished Work - See title page for details.

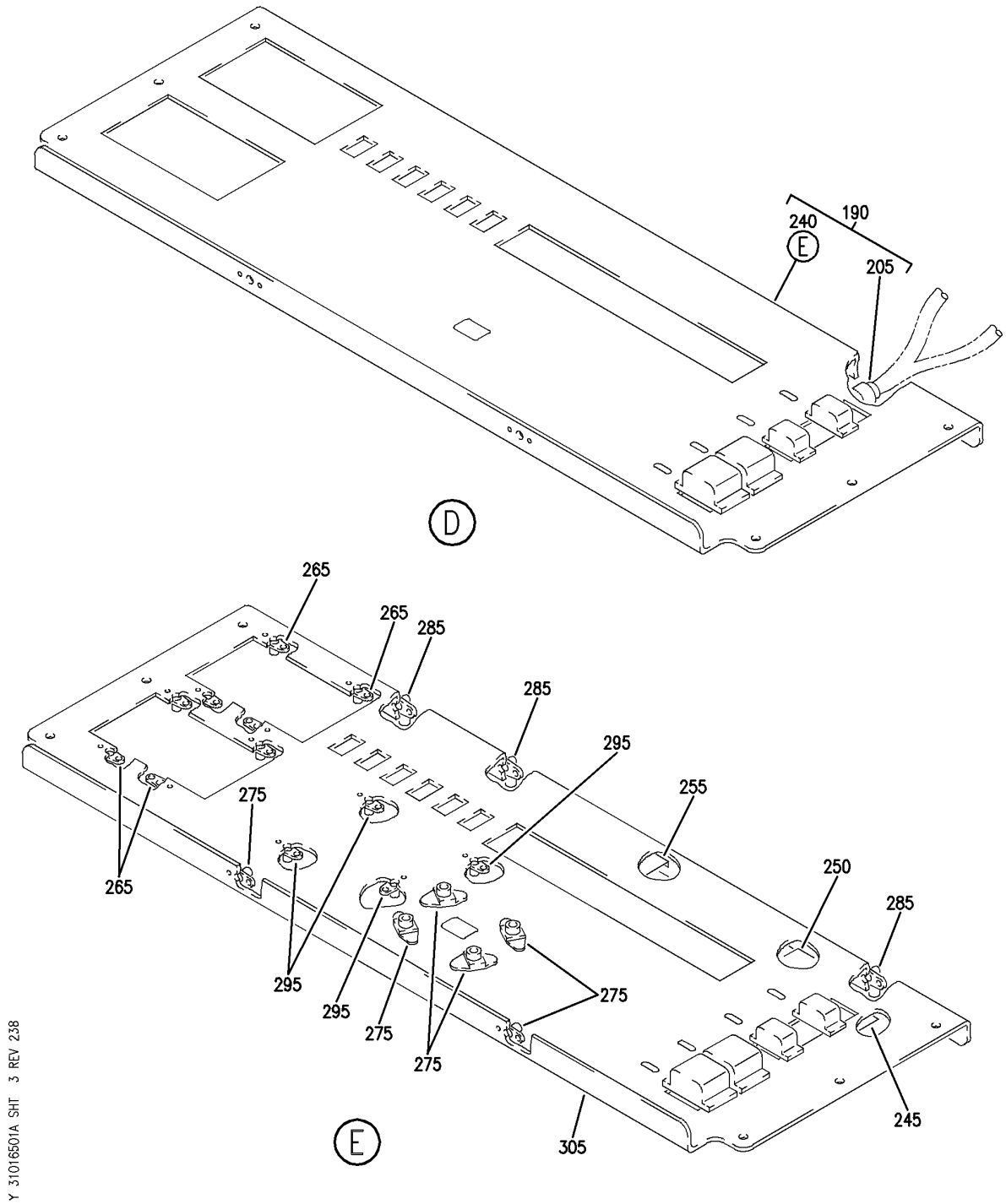

PANEL INSTL-P65 MISC ELECTRONICS EQPT CTR
FIGURE 1A (SHEET 3)

BOEING PROPRIETARY - Copyright © - Unpublished Work - See title page for details.

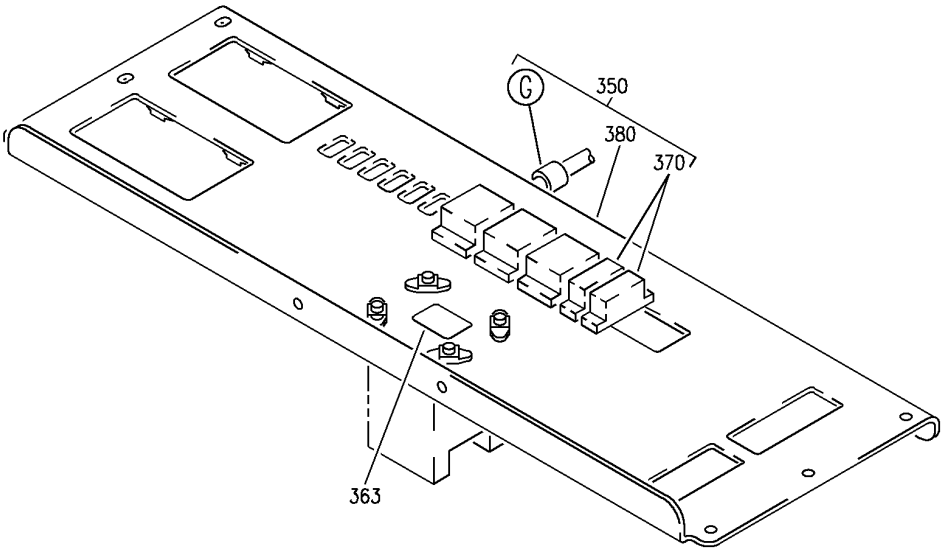

F

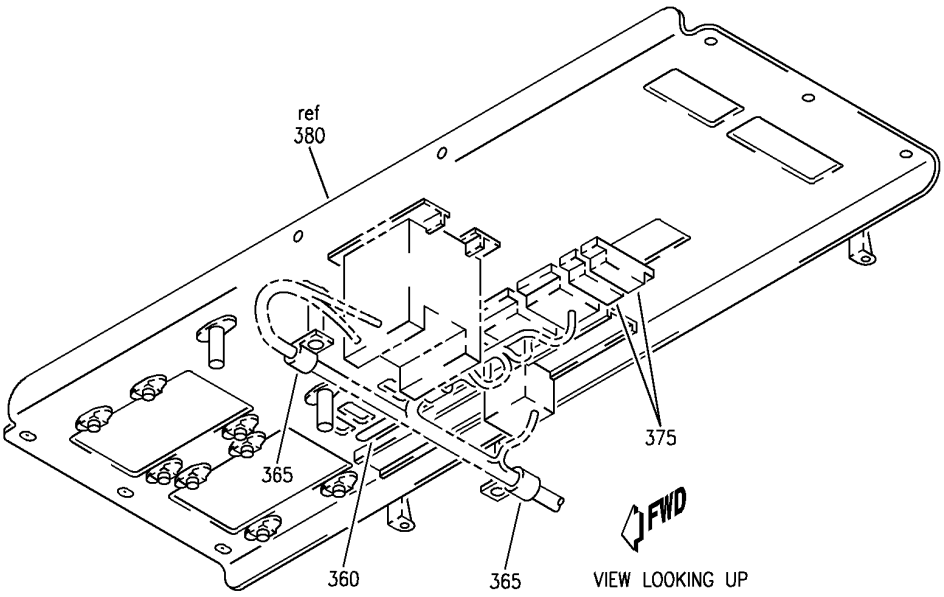

G

Y 31016501A SHT 4 REV 283

PANEL INSTL-P65 MISC ELECTRONICS EQPT CTR
FIGURE 1A (SHEET 4)

BOEING PROPRIETARY - Copyright © - Unpublished Work - See title page for details.

FIG ITEM	PART NUMBER	1 2 3 4 5 6 7 NOMENCLATURE	EFFECT FROM TO	UNITS PER ASSY
1A				
		PANEL INSTL-P65 MISC ELECTRONICS EQPT CTR	101106 108120 504903	
- 1	284N1746-101	PANEL INSTL-P65 MISC ELECTRONICS EQPT CTR FOR NHA SEE: 24-00-58-05E	101101	RF
- 1	284N1746-103	PANEL INSTL-P65 MISC ELECTRONICS EQPT CTR FOR NHA SEE: 24-00-58-05	102102 108120 504903	RF
- 1	MODREF9224	PANEL INSTL-P65 MISC ELECTRONICS EQPT CTR MODULE NUMBER: 284N1746-103 REV A	103106	1
15	NAS1801-3-8	.SCREW- USED ON: 284N1746-103 MODREF9224	101106 108120 504903	12
25	NAS1149D0332J	.WASHER- USED ON: 284N1746-103 MODREF9224	101106 108120 504903	12
35	284N1748-11	.ANGLE ASSY	101101	2
- 100	284N1747-106	PANEL INSTL-P65 MISC ELECTRONICS EQPT CTR FOR NHA SEE: 24-00-58-05E	504903	RF
- 100	284N1747-109	PANEL INSTL-P65 MISC ELECTRONICS EQPT CTR FOR NHA SEE: 24-00-58-05E	101102	RF
- 110	284N1747-1001	.PACKAGE ASSY-OPTION P65 USED ON: 284N1747-100 284N1747-105 284N1747-106 FOR DETAILS SEE: 25-51-60-01B	504903	1
- 115	284N1747-1002	.PACKAGE ASSY-OPTION P65 USED ON: 284N1747-102 284N1747-105 284N1747-106 284N1747-108 FOR DETAILS SEE: 34-46-51-03B	504903	1

MISSING ITEM NUMBERS NOT APPLICABLE

- ITEM NOT ILLUSTRATED

BOEING PROPRIETARY - Copyright © - Unpublished Work - See title page for details.

FIG ITEM	PART NUMBER	1 2 3 4 5 6 7 NOMENCLATURE	EFFECT FROM TO	UNITS PER ASSY
1A				
- 135	284N1747-1007	.PACKAGE ASSY-OPTION P65 USED ON: 284N1747-100 284N1747-103 284N1747-104 284N1747-106 284N1747-111 FOR DETAILS SEE: 33-37-52-01B	504903	1
- 145	284N1747-1009	.PACKAGE ASSY-OPTION P65 USED ON: 284N1747-104 284N1747-109 284N1747-111 284N1747-114 FOR DETAILS SEE: 34-46-51-03B	101102	1
- 150	284N1747-1010	.PACKAGE ASSY-OPTION P65 USED ON: 284N1747-106 284N1747-108 284N1747-109 284N1747-111 FUNCTIONAL REFERENCE: LIGHTS FOR DETAILS SEE 33-37-52-01B DOORS FOR DETAILS SEE 52-34-51-01B	101102 504903	1

MISSING ITEM NUMBERS NOT APPLICABLE

- ITEM NOT ILLUSTRATED

BOEING PROPRIETARY - Copyright © - Unpublished Work - See title page for details.

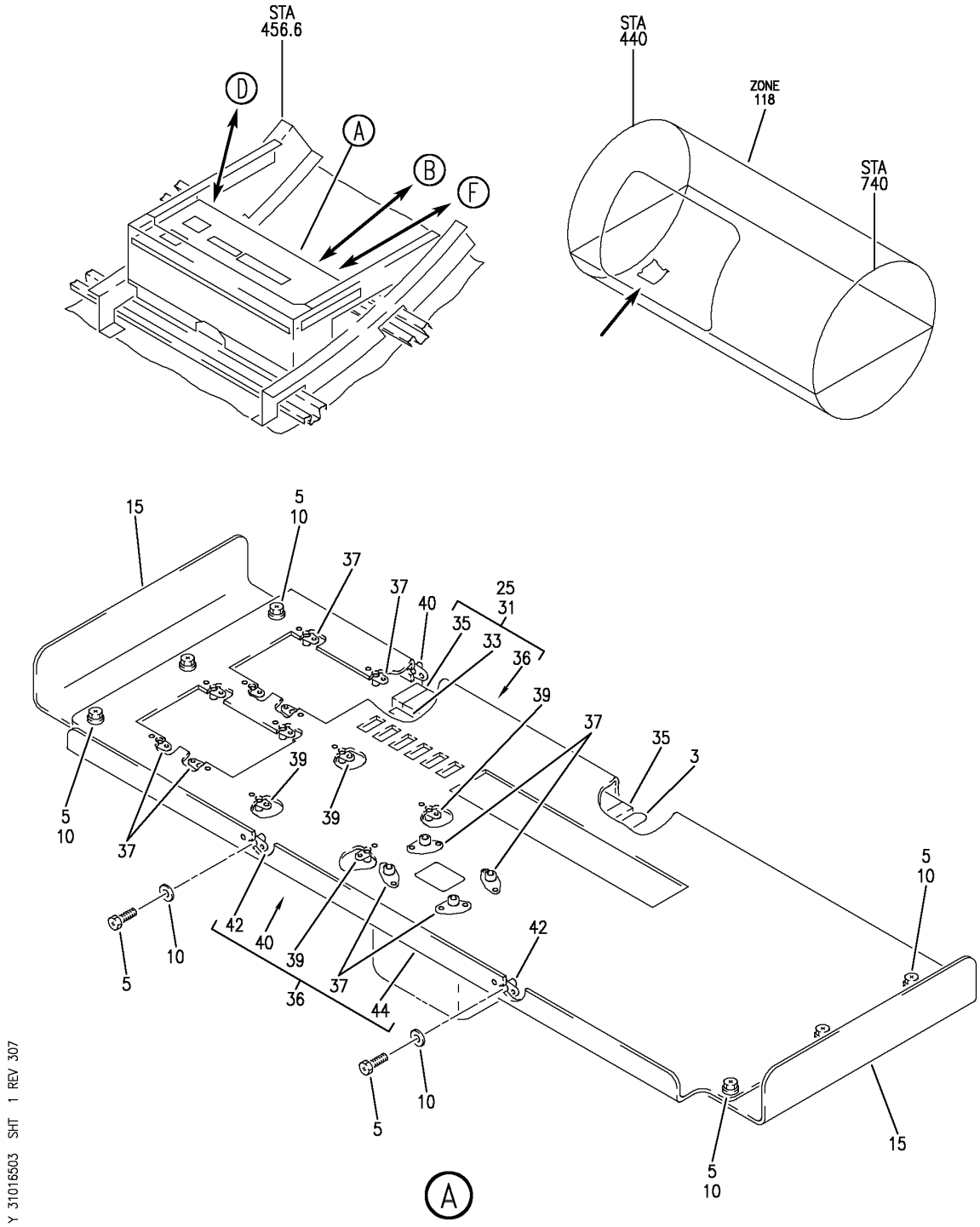

PANEL INSTL-P65 MISC ELECTRONICS EQPT CTR
FIGURE 3 (SHEET 1)

BOEING PROPRIETARY - Copyright © - Unpublished Work - See title page for details.

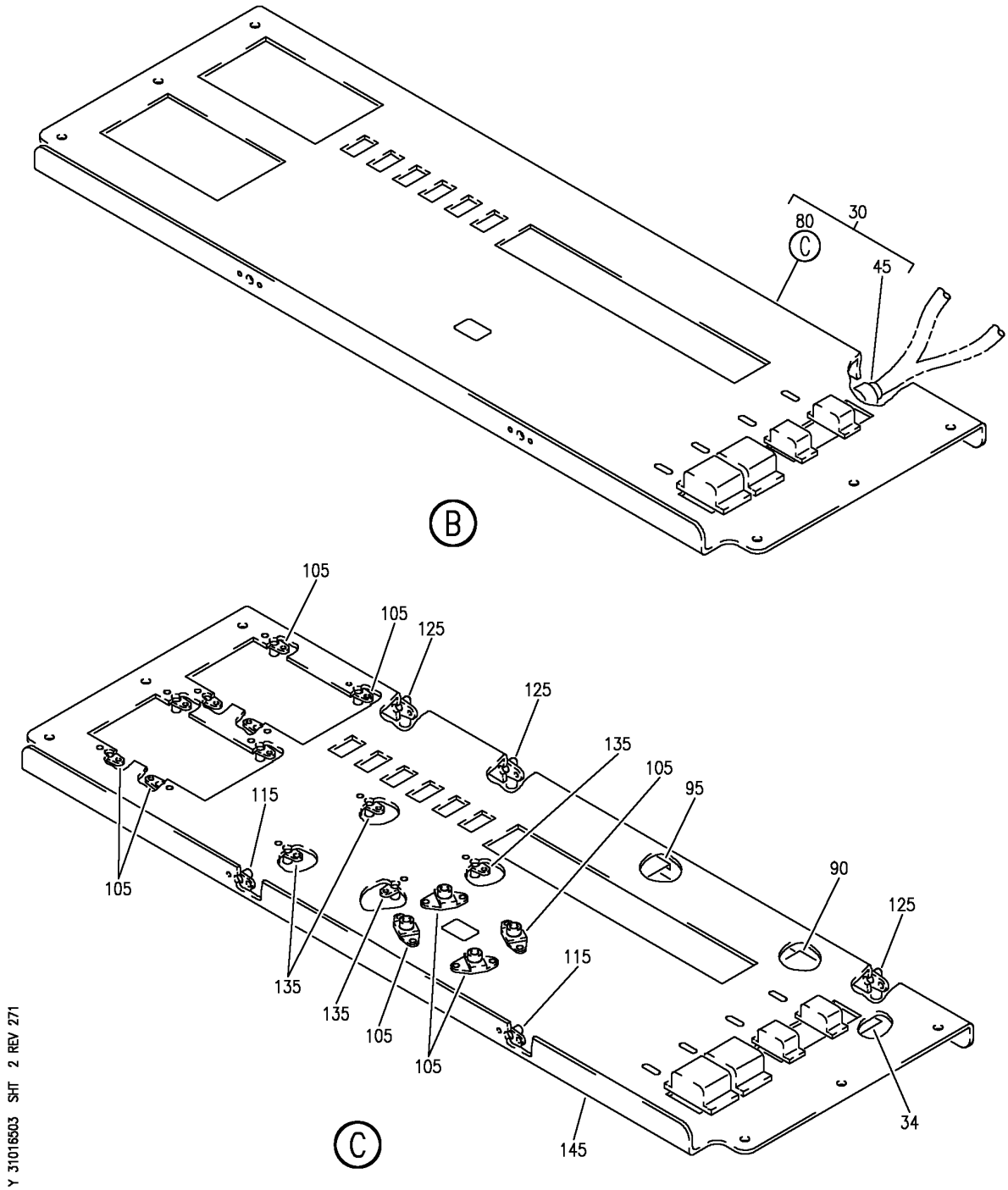

PANEL INSTL-P65 MISC ELECTRONICS EQPT CTR
FIGURE 3 (SHEET 2)

BOEING PROPRIETARY - Copyright © - Unpublished Work - See title page for details.

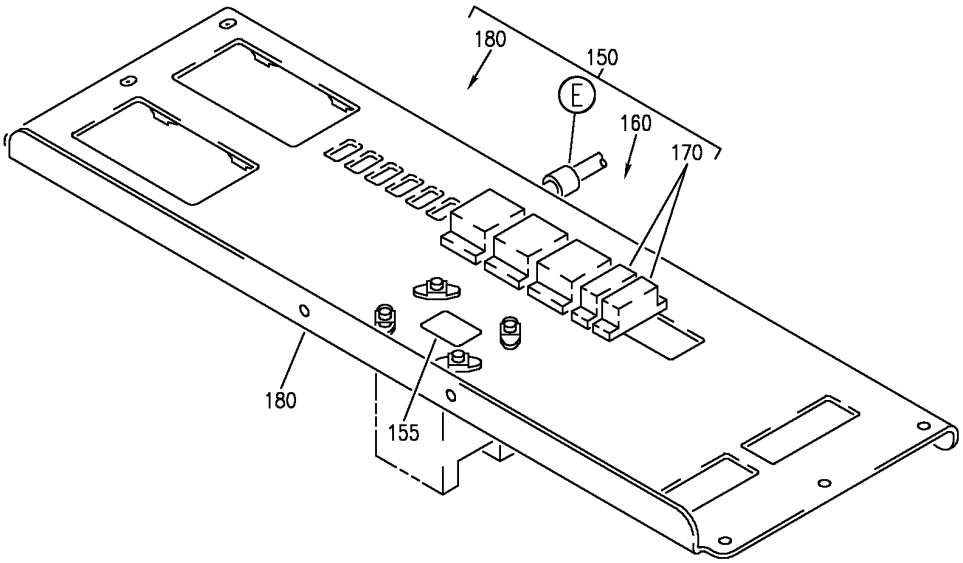

D

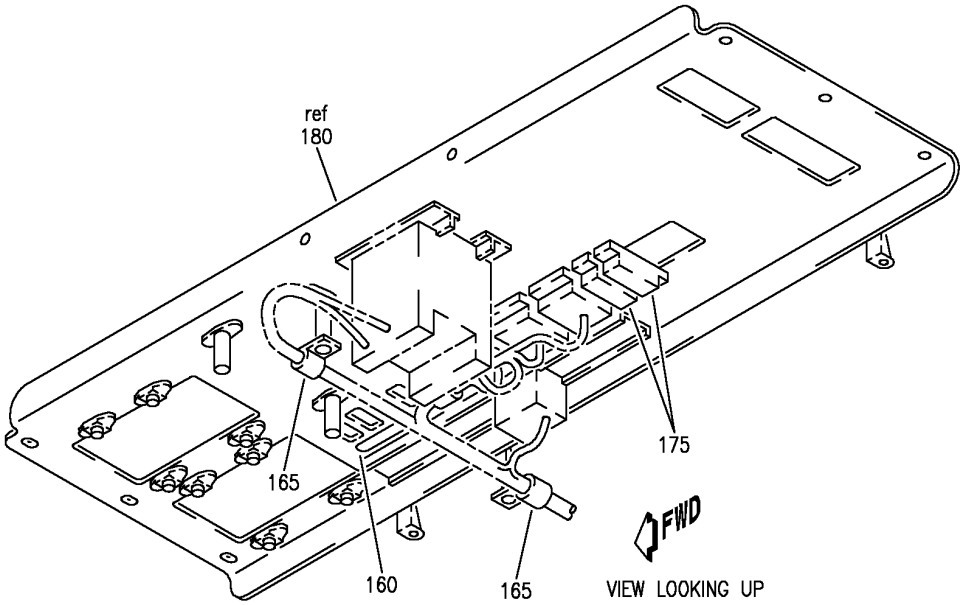

E

Y 31016503 SHT 3 REV 266

PANEL INSTL-P65 MISC ELECTRONICS EQPT CTR
FIGURE 3 (SHEET 3)

BOEING PROPRIETARY - Copyright © - Unpublished Work - See title page for details.

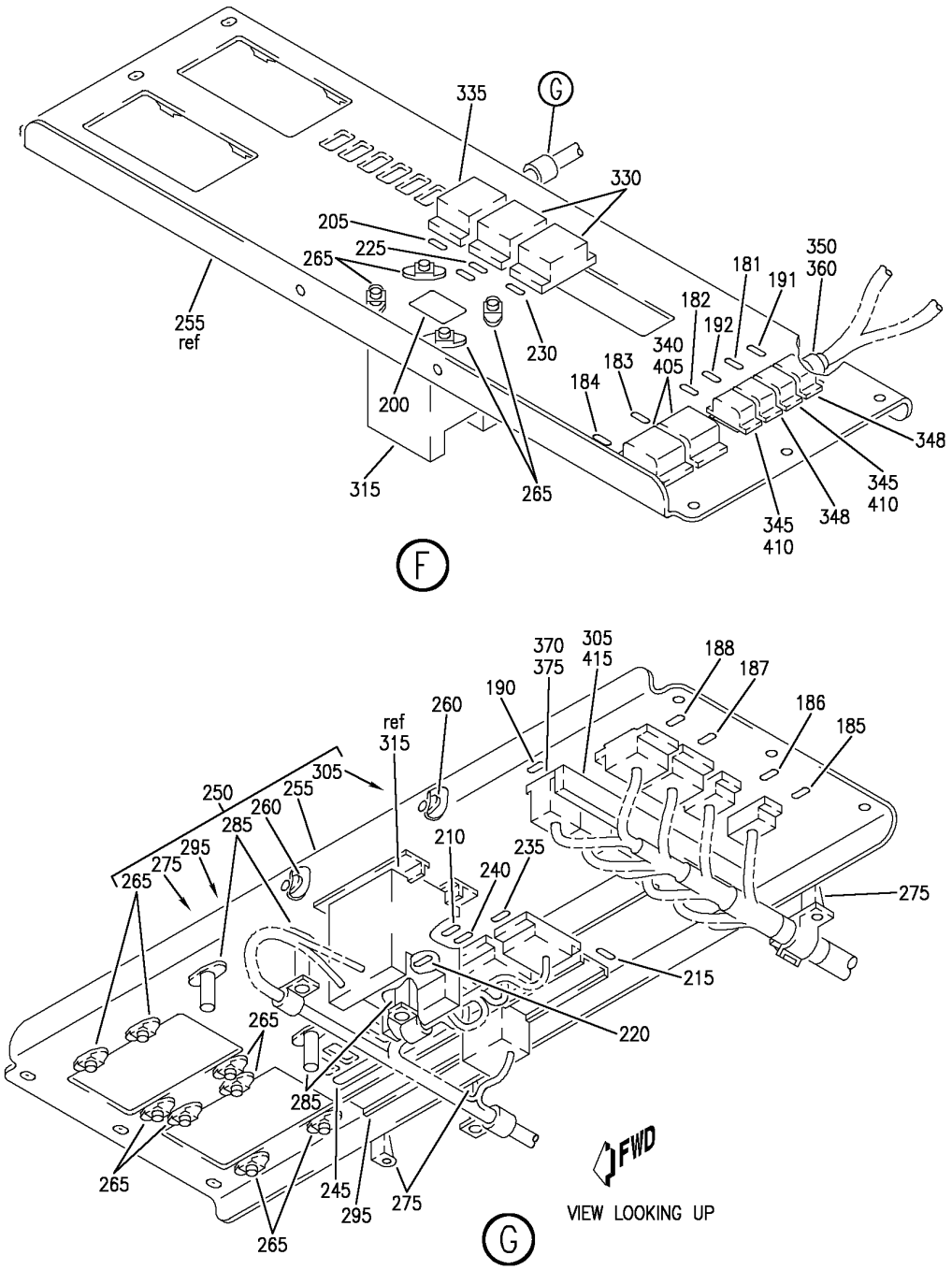

Y 31016503 SHT 4 REV 329

PANEL INSTL-P65 MISC ELECTRONICS EQPT CTR
FIGURE 3 (SHEET 4)

BOEING PROPRIETARY - Copyright © - Unpublished Work - See title page for details.

FIG ITEM	PART NUMBER	1 2 3 4 5 6 7 NOMENCLATURE	EFFECT FROM TO	UNITS PER ASSY
3				
		PANEL INSTL-P65 MISC ELECTRONICS EQPT CTR	002100 107107 121503 904999	
- 1	284N1746-1	PANEL INSTL-P65 MISC ELECTRONICS EQPT CTR FOR NHA SEE: 24-00-58-01	121503 904949	RF
- 1	284N1746-2	PANEL INSTL-P65 MISC ELECTRONICS EQPT CTR REWORK DRAWING REF: 824N1065-1 FOR NHA SEE: 24-00-58-01	002004 006100 107107 950999	RF
3	BAC27NEX1300	.DECAL- POST SERVICE BULLETIN: 34-0200	952952	1
5	NAS1801-3-8	.SCREW- PRE SERVICE BULLETIN: 34-0200	002100 107107 121503 904999	8
5	BACS12GU3K8	.SCREW- POST SERVICE BULLETIN: 34-0200	952952	8
15	284N1748-3	.ANGLE ASSY ATTACHING PARTS	002004 006100 107107 121503 904999	2
- 20	BACR15FT5D	.RIVET- SIZE DETERMINED ON INSTL.	002004 006100 107107 121503 904999	10
		-------*-------		

MISSING ITEM NUMBERS NOT APPLICABLE

- ITEM NOT ILLUSTRATED

BOEING PROPRIETARY - Copyright © - Unpublished Work - See title page for details.

FIG ITEM	PART NUMBER	1 2 3 4 5 6 7 NOMENCLATURE	EFFECT FROM TO	UNITS PER ASSY
3				
25	284N1747-3	.PANEL ASSY-P65 MISC ELECTRONICS EQPT CTR (FUSELAGE ONLY) PRE SERVICE BULLETIN: 34-0200 REWORKED BY SB: 33-0035 FUNCTIONAL REFERENCE: LIGHTS FOR DETAILS SEE 33-37-52-01 DOORS FOR DETAILS SEE 52-34-51-01	002100 107107 952999	1
25	284N1747-7	.PANEL ASSY-P65 MISC ELECTRONICS EQPT CTR (FUSELAGE ONLY) FUNCTIONAL REFERENCE: LIGHTS FOR DETAILS SEE 33-37-52-01 DOORS FOR DETAILS SEE 52-34-51-01	121503 904949	1
25	284N1747-9	.PANEL ASSY-P65 MISC ELECTRONICS EQPT CTR (FUSELAGE ONLY) FUNCTIONAL REFERENCE: EQUIPMENT/FURNISHINGS FOR DETAILS SEE 25-51-60-01 LIGHTS FOR DETAILS SEE 33-37-52-01 DOORS FOR DETAILS SEE 52-34-51-01	950951	1

MISSING ITEM NUMBERS NOT APPLICABLE

– ITEM NOT ILLUSTRATED

BOEING PROPRIETARY - Copyright © - Unpublished Work - See title page for details.

FIG ITEM	PART NUMBER	1 2 3 4 5 6 7 NOMENCLATURE	EFFECT FROM TO	UNITS PER ASSY
3				
30	284N1747-3	.PANEL ASSY-P65 MISC ELECTRONICS EQPT CTR (FUSELAGE ONLY) REWORK DRAWING REF: 824N1065-1 REWORKED BY SB: 34-0200 FUNCTIONAL REFERENCE: LIGHTS FOR DETAILS SEE 33-37-52-01 NAVIGATION FOR DETAILS SEE 34-22-51-02 34-46-51-06 DOORS FOR DETAILS SEE 52-34-51-01	952952	1
33	BAC27TEX8	..DECAL- PLACARD CONTENT: 1 THRU 23	002004 006100 107107 952999	1
34	BAC27TEX6739	..MARKER SHEET-BLANK (INCLUDES DECALS IDENTIFIED ON THE ILLUSTRATION) POST SERVICE BULLETIN: 34-0200	952952	AR
36	284N1748-7	..PLATE ASSY- PRE SERVICE BULLETIN: 34-0200	002100 107107 952999	1
37	BRF200A08	...NUTPLATE SUPPLIER CODE: V52828 SPECIFICATION NUMBER: BACN10JR08F OPTIONAL PART: NS103203-82 V80539 RMF9201-82 V72962 VN152A1-82 V92215 T8091S832 V11815 F5000-08BAC V15653	002004 006100 107107 952999	12

MISSING ITEM NUMBERS NOT APPLICABLE

– ITEM NOT ILLUSTRATED

BOEING PROPRIETARY - Copyright © - Unpublished Work - See title page for details.

FIG ITEM	PART NUMBER	1 2 3 4 5 6 7 NOMENCLATURE	EFFECT FROM TO	UNITS PER ASSY
3				
		ATTACHING PARTS		
- 38	BACR15BA3D	...RIVET-	002004	24
		SIZE DETERMINED ON INSTL.	006100	
			107107	
			952999	
		-------*-------		
39	WS14A10	...NUTPLATE	002004	4
		SUPPLIER CODE:	006100	
		V04169	107107	
		SPECIFICATION NUMBER:	952999	
		BACN10TL3A10		
40	T8059S1032B3	...NUTPLATE	002004	1
		SUPPLIER CODE:	006100	
		V52828	107107	
		SPECIFICATION NUMBER:	952999	
		BACN10MK3-85		
		OPTIONAL PART:		
		RM52LHA71-8-02		
		V72962		
		ATTACHING PARTS		
- 41	BACR15BA4D	...RIVET-	002004	10
		SIZE DETERMINED ON INSTL.	006100	
			107107	
			952999	
		-------*-------		
42	BRF200A3	...NUTPLATE	002004	2
		SUPPLIER CODE:	006100	
		V52828	107107	
		SPECIFICATION NUMBER:	952999	
		BACN10JR3F		
		OPTIONAL PART:		
		NS103203-02		
		V80539		
		RMF9201-3		
		V72962		
		VN152A1-02		
		V92215		
		T8091S1032		
		V11815		
		F5000-3BAC		
		V15653		
		ATTACHING PARTS		
- 43	BACR15BA3D	...RIVET-	002004	4
		SIZE DETERMINED ON INSTL.	006100	
			107107	
			952999	
		-------*-------		

MISSING ITEM NUMBERS NOT APPLICABLE

- ITEM NOT ILLUSTRATED

BOEING PROPRIETARY - Copyright © - Unpublished Work - See title page for details.

FIG ITEM	PART NUMBER	1 2 3 4 5 6 7 NOMENCLATURE	EFFECT FROM TO	UNITS PER ASSY
3				
44	284N1748-2	...PANEL	002004 006100 107107 952999	1
45	287T0011-3	..CLAMP- ATTACHING PARTS	952952	1
- 50	BACS12GU3K6	..SCREW	952952	1
- 55	NAS1149D0316J	..WASHER -------*-------	952952	1
- 60	N2088	..PLUG- SUPPLIER CODE: V75345 SPECIFICATION NUMBER: BACP20BA1 OPTIONAL PART: SZ7105 V95272 4841 V84914 POST SERVICE BULLETIN: 34-0200	952952	AR
- 65	BACPS38K10	..STRAP-PLASTIC POST SERVICE BULLETIN: 34-0200	952952	AR
80	824N3065-1	..PANEL ASSY- POST SERVICE BULLETIN: 34-0200	952952	1
90	RBGT6	...TRACK- SUPPLIER CODE: V09922 SPECIFICATION NUMBER: S280W555-506 ELECTRICAL EQUIP NUMBER: TB0187 WIRING DIAGRAM REF: 344614	952952	1
95	AMY0800T5	...TRACK- SUPPLIER CODE: V09922 SPECIFICATION NUMBER: BACT44B0800U ELECTRICAL EQUIP NUMBER: TB0188 WIRING DIAGRAM REF: 523411 ATTACHING PARTS	952952	1
- 100	BACR15BB4ADC	...RIVET- SIZE DETERMINED ON INSTL. -------*-------	952952	6

MISSING ITEM NUMBERS NOT APPLICABLE

– ITEM NOT ILLUSTRATED

BOEING PROPRIETARY - Copyright © - Unpublished Work - See title page for details.

FIG ITEM	PART NUMBER	1 2 3 4 5 6 7 NOMENCLATURE	EFFECT FROM TO	UNITS PER ASSY
3				
105	BRF200C08D	...NUTPLATE SUPPLIER CODE: V52828 SPECIFICATION NUMBER: BACN10JR08CFD OPTIONAL PART: NS202476-82 V80539 102F9201-82 V72962 T8092C832CD V11815 K51602-08BAC V15653 ATTACHING PARTS	952952	12
- 110	BACR15BA3ADC	...RIVET- SIZE DETERMINED ON INSTL. -------*-------	952952	20
115	BRF200C3D	...NUTPLATE SUPPLIER CODE: V52828 SPECIFICATION NUMBER: BACN10JR3CFD OPTIONAL PART: K51602-3BAC V15653 NS202476-02 V80539 102F9201-3 V72962 T8092C1032CD V11815 ATTACHING PARTS	952952	2
- 120	BACR15BA4ADC	...RIVET- SIZE DETERMINED ON INSTL. -------*-------	952952	4
125	T8059S1032B3	...NUTPLATE SUPPLIER CODE: V52828 SPECIFICATION NUMBER: BACN10MK3-85 OPTIONAL PART: RM52LHA71-8-02 V72962 ATTACHING PARTS	952952	3
- 130	BACR15BB4ADC	...RIVET- SIZE DETERMINED ON INSTL. -------*-------	952952	6

MISSING ITEM NUMBERS NOT APPLICABLE

- ITEM NOT ILLUSTRATED

BOEING PROPRIETARY - Copyright © - Unpublished Work - See title page for details.

FIG ITEM	PART NUMBER	1 2 3 4 5 6 7 NOMENCLATURE	EFFECT FROM TO	UNITS PER ASSY
3				
135	WSI4-10	...NUTPLATE SUPPLIER CODE: V04169 SPECIFICATION NUMBER: BACN10TL3-10 ATTACHING PARTS	952952	4
- 140	BACR15BB4ADC	...RIVET- SIZE DETERMINED ON INSTL. -------*-------	952952	8
145	824N3065-2	...PANEL	952952	1

MISSING ITEM NUMBERS NOT APPLICABLE

- ITEM NOT ILLUSTRATED

BOEING PROPRIETARY - Copyright © - Unpublished Work - See title page for details.

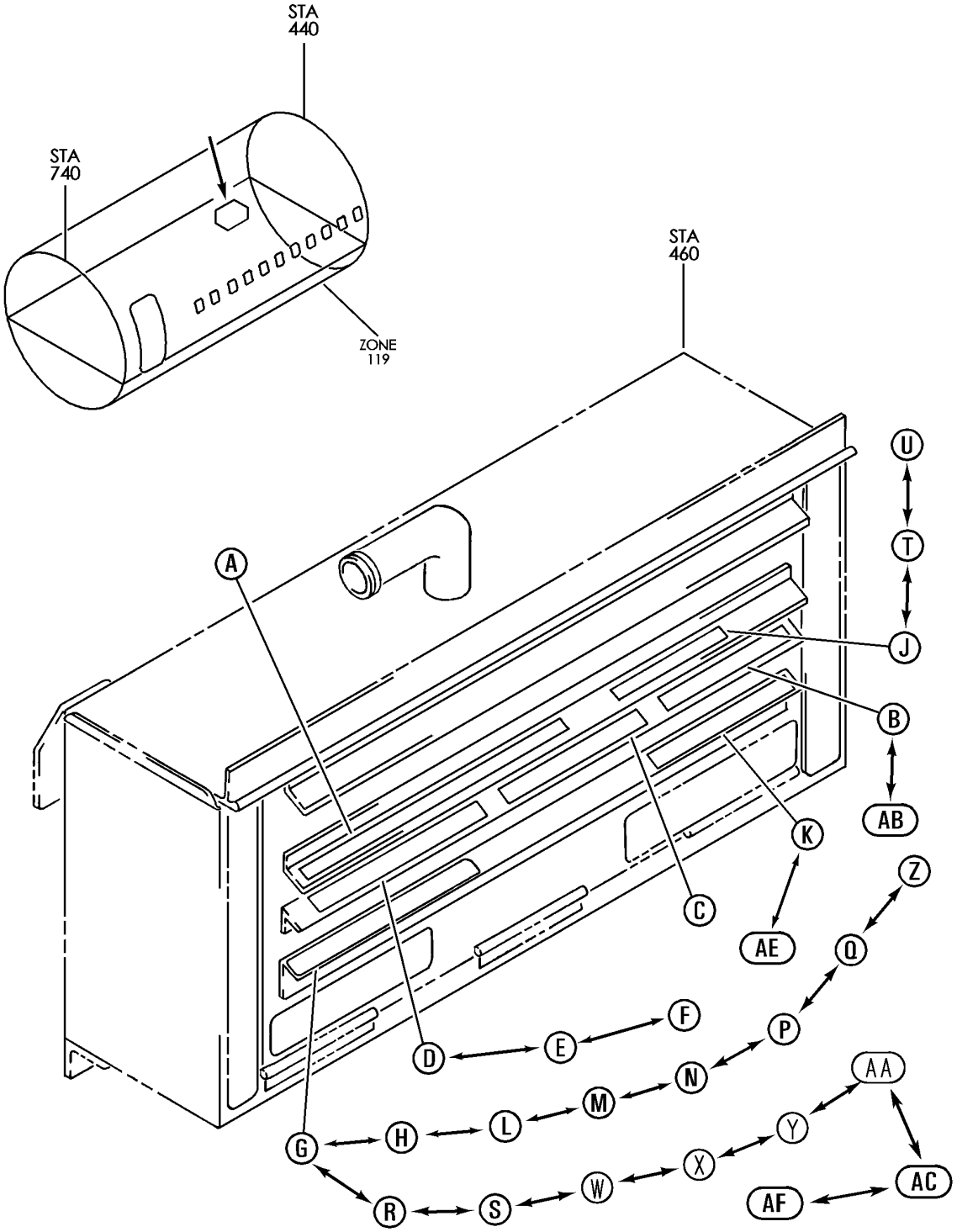

PANEL INSTL-P70 MISC RELAY
FIGURE 1 (SHEET 1)

BOEING PROPRIETARY - Copyright © - Unpublished Work - See title page for details.

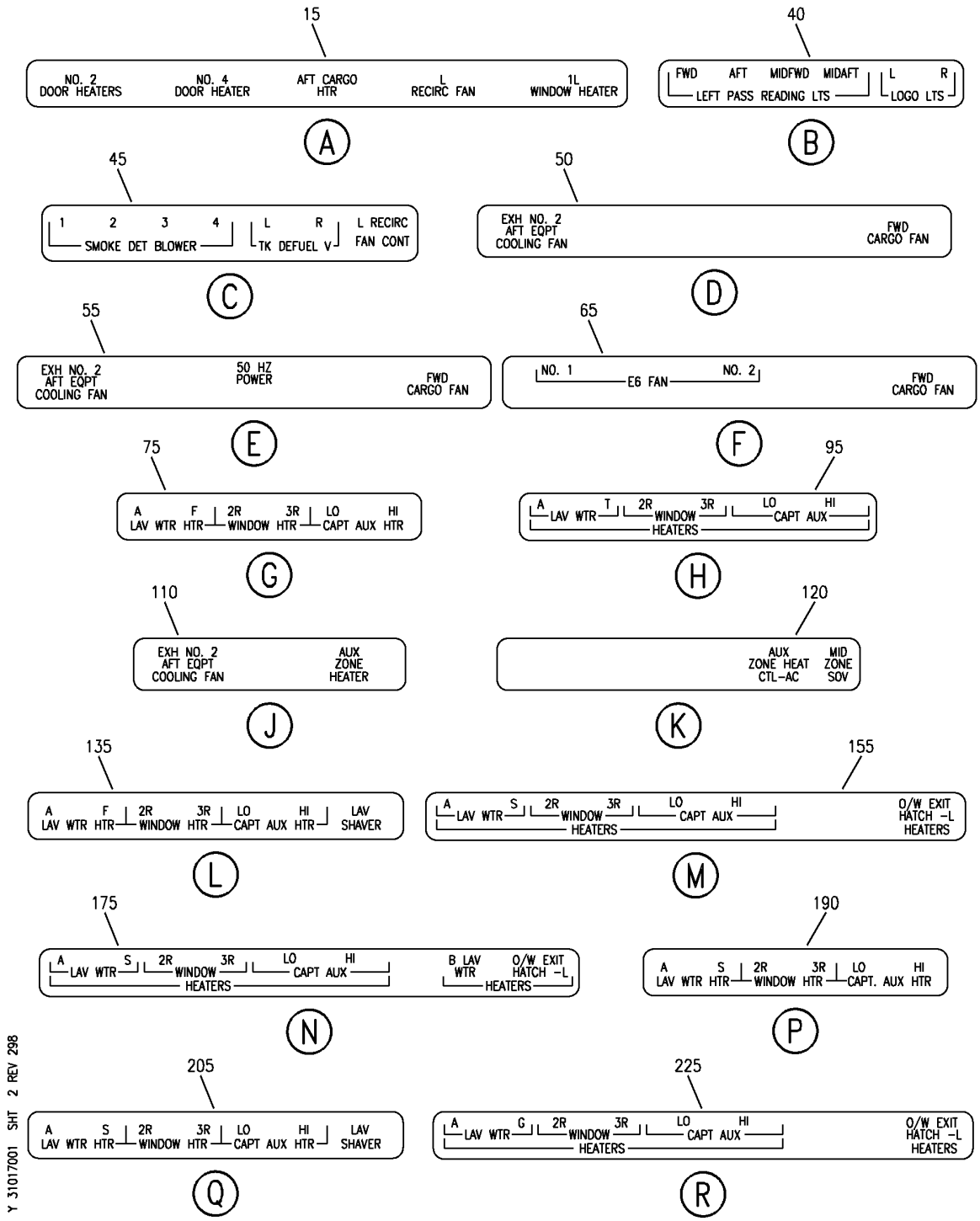

PANEL INSTL-P70 MISC RELAY
FIGURE 1 (SHEET 2)

BOEING PROPRIETARY - Copyright © - Unpublished Work - See title page for details.

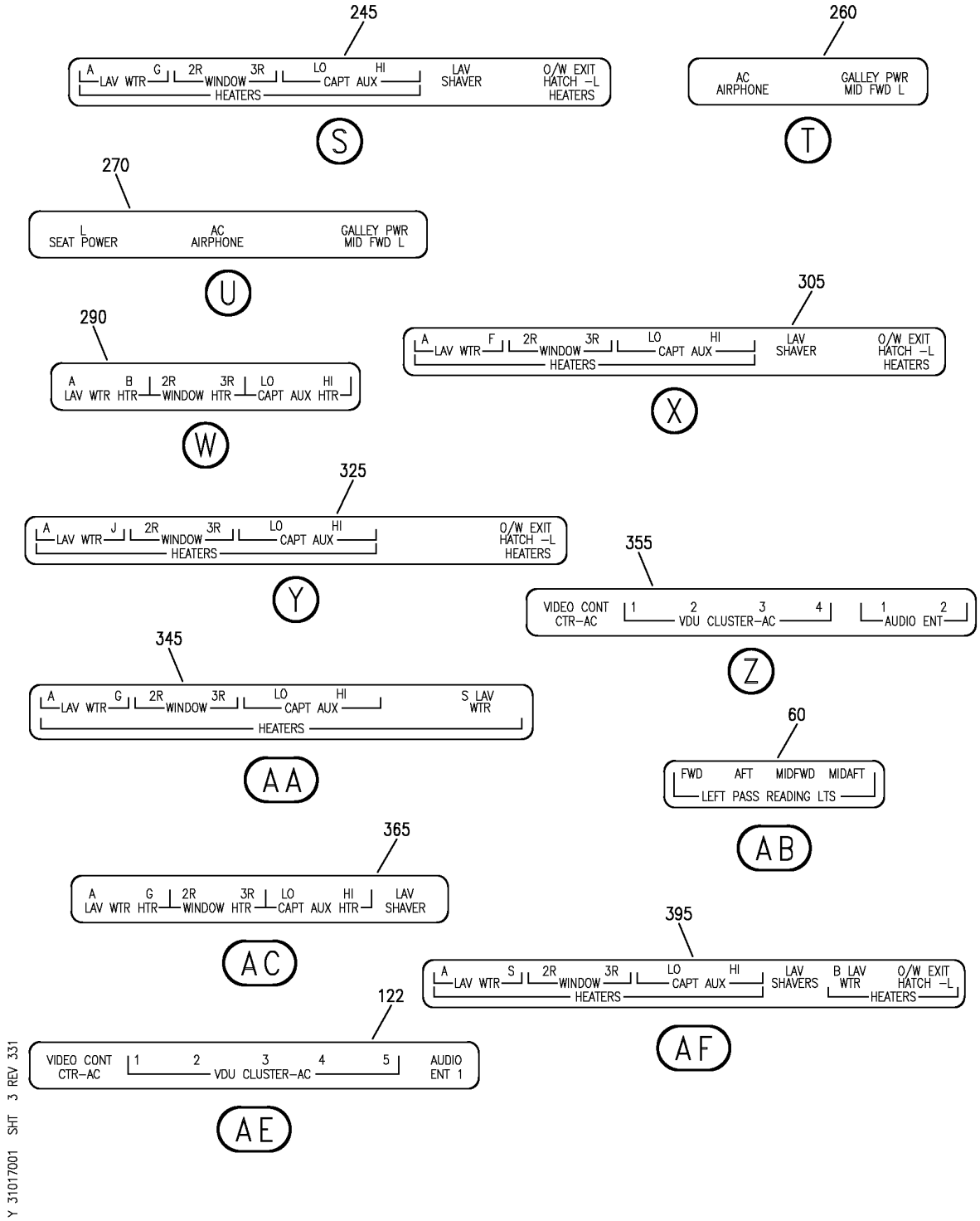

PANEL INSTL-P70 MISC RELAY
FIGURE 1 (SHEET 3)

BOEING PROPRIETARY - Copyright © - Unpublished Work - See title page for details.

FIG ITEM	PART NUMBER	1 2 3 4 5 6 7 NOMENCLATURE	EFFECT FROM TO	UNITS PER ASSY
1				
		PANEL INSTL-P70 MISC	101102	
		RELAY	504903	
- 1	284N1129-113	PANEL INSTL-P70 MISC	101102	RF
		RELAY		
		FOR NHA SEE:		
		24-00-58-05C		
- 2	284N1129-122	PANEL INSTL-P70 MISC	504903	RF
		RELAY		
		FOR NHA SEE:		
		24-00-58-05C		
- 5	BACP20B43B	.PLUG	101102	AR
			504903	
- 10	284N1129-1001	.PACKAGE ASSY-OPTION P70	101102	1
		MISC RELAY	504903	
		MISCELLANEOUS DATA:		
		PASSENGER MINOR MODEL		
		FUNCTIONAL REFERENCE:		
		AIR CONDITIONING		
		FOR DETAILS SEE		
		21-25-71-03A		
		21-43-71-02A		
		21-44-71-03A		
		ELECTRICAL POWER		
		FOR DETAILS SEE		
		24-51-60-01A		
		24-53-71-04A		
		EQUIPMENT/FURNISHINGS		
		FOR DETAILS SEE		
		25-17-61-01		
		FLIGHT CONTROL		
		FOR DETAILS SEE		
		27-51-71-04A		
		FUEL		
		FOR DETAILS SEE		
		28-25-71-04A		
		PLACARDS AND MARKINGS		
		FOR DETAILS SEE		
		11-36-10-01A		
15	BAC27NEX2928	..DECAL	101102	1
			504903	

MISSING ITEM NUMBERS NOT APPLICABLE

– ITEM NOT ILLUSTRATED

BOEING PROPRIETARY - Copyright © - Unpublished Work - See title page for details.

FIG ITEM	PART NUMBER	1 2 3 4 5 6 7 NOMENCLATURE	EFFECT FROM TO	UNITS PER ASSY
1				
- 20	284N1129-1002	.PACKAGE ASSY-OPTION P70 MISC RELAY MISCELLANEOUS DATA: LOGO LIGHTS FUNCTIONAL REFERENCE: ELECTRICAL POWER FOR DETAILS SEE 24-51-60-01A LIGHTS FOR DETAILS SEE 33-45-51-02A	101102 504903	1
- 25	284N1129-1003	.PACKAGE ASSY-OPTION P70 MISC RELAY MISCELLANEOUS DATA: LA LAVATORY FOR DETAILS SEE: 24-51-60-01A	101102 504903	1
- 30	284N1129-1004	.PACKAGE ASSY-OPTION P70 MISC RELAY MISCELLANEOUS DATA: LF LAVATORY FOR DETAILS SEE: 24-51-60-01A	504903	1
- 35	284N1129-1005	.PACKAGE ASSY-OPTION P70 MISC RELAY MISCELLANEOUS DATA: PASSENGER MINOR MODEL AND LOGO LIGHTS AND OPEN B4,5,6,17	101102 504903	1
40	BAC27NEX1306	..DECAL- USED ON: 284N1129-1005 284N1129-1014 284N1129-1025	101102 504903	1
45	BAC27NEX2098	..DECAL- USED ON: 284N1129-1005 284N1129-1014 284N1129-1025 284N1129-1030	101102 504903	1
50	BAC27NEX2119	..DECAL- USED ON: 284N1129-1005 284N1129-1030	101102 504903	1
- 70	284N1129-1006	.PACKAGE ASSY-OPTION P70 MISC RELAY	504903	1
75	BAC27NEX1810	..DECAL	504903	1

MISSING ITEM NUMBERS NOT APPLICABLE

- ITEM NOT ILLUSTRATED

BOEING PROPRIETARY - Copyright © - Unpublished Work - See title page for details.

FIG ITEM	PART NUMBER	1 2 3 4 5 6 7 NOMENCLATURE	EFFECT FROM TO	UNITS PER ASSY
1				
- 165	284N1129-1022	.PACKAGE ASSY-OPTION P70 MISC RELAY MISCELLANEOUS DATA: LB LAVATORY FOR DETAILS SEE: 24-51-60-01A	101102	1
- 195	284N1129-1027	.PACKAGE ASSY-OPTION P70 MISC RELAY-PUMP START POSITION DATA: L FWD FOR DETAILS SEE: 28-25-71-04A	101102 504903	1
- 285	284N1129-1042	.PACKAGE ASSY-OPTION P70 MISC RELAY MISCELLANEOUS DATA: LAV A & LAV F (B)	101102	1
290	BAC27NEX1520	..DECAL	101102	1

MISSING ITEM NUMBERS NOT APPLICABLE

- ITEM NOT ILLUSTRATED

BOEING PROPRIETARY - Copyright © - Unpublished Work - See title page for details.

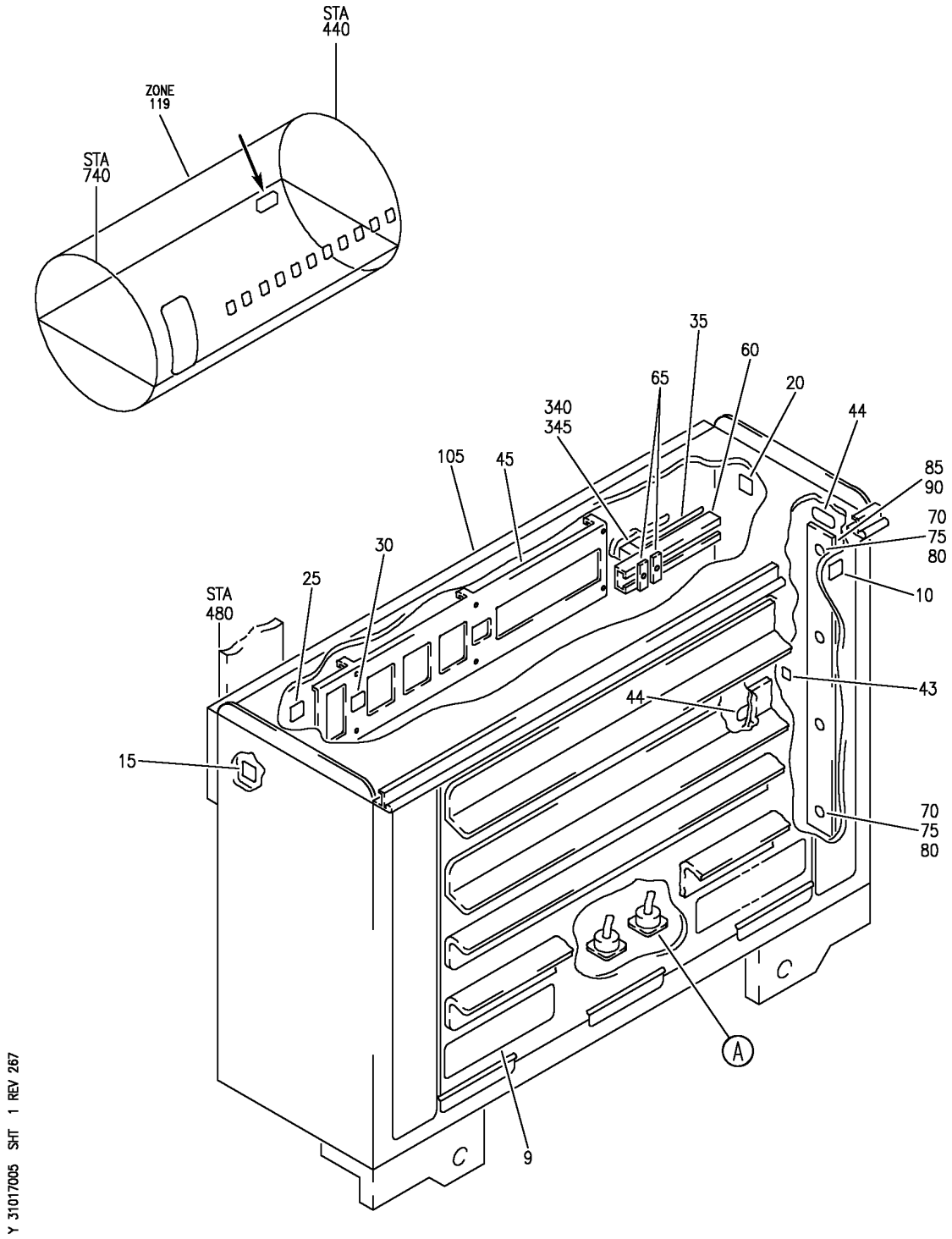

PANEL INSTL-P70 MISC RELAY (INDICATING/RECORDING SYSTEMS ONLY)
FIGURE 5 (SHEET 1)

BOEING PROPRIETARY - Copyright © - Unpublished Work - See title page for details.

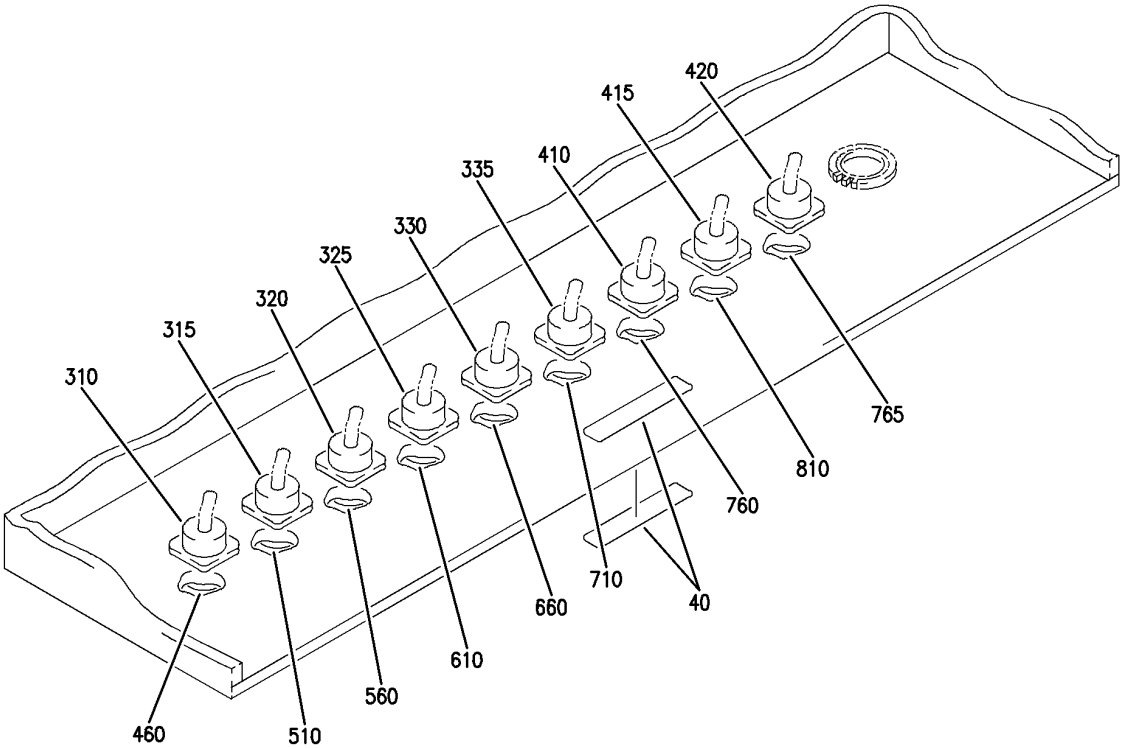

A

Y 31017005 SHT 2 REV 225

PANEL INSTL-P70 MISC RELAY (INDICATING/RECORDING SYSTEMS ONLY)
FIGURE 5 (SHEET 2)

BOEING PROPRIETARY - Copyright © - Unpublished Work - See title page for details.

FIG ITEM	PART NUMBER	1 2 3 4 5 6 7 NOMENCLATURE	EFFECT FROM TO	UNITS PER ASSY
5		PANEL INSTL-P70 MISC RELAY (INDICATING/RECORDING SYSTEMS ONLY)	103106 108120	
- 2	284N1129-423	PANEL INSTL-P70 MISC RELAY (INDICATING/RECORDING SYSTEMS ONLY) FOR NHA/OTHER SYS DET SEE: 24-00-58-05C	108120	RF
- 5	MODREF31428	PANEL INSTL-P70 MISC RELAY (INDICATING/RECORDING SYSTEMS ONLY) MODULE NUMBER: 284N1129-438 REV A FOR OTHER SYS DETAILS SEE: 11-36-10-01B 21-25-71-03C 21-43-71-02B 21-44-71-03B 21-45-61-01 23-32-55-03B 24-51-02-07 24-51-04-01 24-51-60-04 24-53-71-04B 27-51-71-04B 28-25-71-04B 33-45-51-02B	103105	RF
- 5	MODREF170991	PANEL INSTL-P70 MISC RELAY (INDICATING/RECORDING SYSTEMS ONLY) MODULE NUMBER: 284N1129-438 REV C FOR OTHER SYS DETAILS SEE: 11-36-10-01B 21-25-71-03C 21-43-71-02B 21-44-71-03B 21-45-61-01 23-32-55-03B 24-51-02-07 24-51-04-01 24-51-60-04 24-53-71-04B 27-51-71-04B 28-25-71-04B 33-45-51-02B	106106	RF

MISSING ITEM NUMBERS NOT APPLICABLE

- ITEM NOT ILLUSTRATED

BOEING PROPRIETARY - Copyright © - Unpublished Work - See title page for details.

FIG ITEM	PART NUMBER	1 2 3 4 5 6 7 NOMENCLATURE	EFFECT FROM TO	UNITS PER ASSY
5				
9	BAC27NEX1322	.DECAL-	103106	1
		PLACARD CONTENT:	108120	
		P70 PANEL MISC ELEC		
		EQUIP		
10	BAC27NEX0173	.DECAL-	103106	1
		PLACARD CONTENT:	108120	
		A		
15	BAC27NEX0174	.DECAL-	103106	1
		PLACARD CONTENT:	108120	
		B		
20	BAC27NEX0176	.DECAL-	103106	1
		PLACARD CONTENT:	108120	
		D		
25	BAC27NEX0247	.DECAL-	103106	1
		PLACARD CONTENT:	108120	
		E		
30	BAC27NEX0248	.DECAL-	103106	1
		PLACARD CONTENT:	108120	
		F		
35	BAC27NEX0938	.DECAL-	103106	1
		PLACARD CONTENT:	108120	
		1-10		
40	BAC27NEX1409	.DECAL-	103106	2
		PLACARD CONTENT:	108120	
		AP0070		
43	TTVF2525WE10	.TAPE-ID	103106	AR
		SUPPLIER CODE:	108120	
		VOKW00		
		SPECIFICATION NUMBER:		
		BACT19J3		
		OPTIONAL PART:		
		THT11-437W10		
		V85480		
44	TTVF7525WE10	.TAPE	103106	AR
		SUPPLIER CODE:	108120	
		VOKW00		
		SPECIFICATION NUMBER:		
		BACT19J4		
		OPTIONAL PART:		
		THT1-437W10		
		V85480		
45	284N1128-32	.BRACKET ASSY	103106	1
			108120	
		ATTACHING PARTS		
- 50	NAS602-8P	.SCREW-	108120	6
- 50	BACS12CK08-8	.SCREW-	103106	6
- 55	NAS1149DN816H	.WASHER	103106	6
			108120	
		-------*-------		

MISSING ITEM NUMBERS NOT APPLICABLE

- ITEM NOT ILLUSTRATED

BOEING PROPRIETARY - Copyright © - Unpublished Work - See title page for details.

FIG ITEM	PART NUMBER	1 2 3 4 5 6 7 NOMENCLATURE	EFFECT FROM TO	UNITS PER ASSY
5				
60	AMY0400T5	.TRACK-	103106	1
		SUPPLIER CODE:	108120	
		V09922		
		SPECIFICATION NUMBER:		
		BACT44B0400U		
		ELECTRICAL EQUIP NUMBER:		
		TB0155		
65	H49-2	.CLAMP	103106	2
		SUPPLIER CODE:	108120	
		V34941		
		SPECIFICATION NUMBER:		
		BACC49A2		
		OPTIONAL PART:		
		MF104-2		
		V6E102		
70	NAS600-7P	.SCREW-	108120	4
70	BACS12CK04-7	.SCREW-	103106	4
75	NAS1149DN416H	.WASHER	103106	4
			108120	
80	MS35649-242	.NUT	103106	4
			108120	
85	MS18029-2S12	.COVER ASSY	103106	1
			108120	
90	MS27212-2-12	.TERMINAL BOARD ASSY-	103106	1
		ELECTRICAL EQUIP NUMBER:	108120	
		TB5060		
105	13351000-3	.ENCLOSURE ASSY-	103106	1
		SUPPLIER CODE:	108120	
		V23296		
- 300	286N1250-335	WIRE BUNDLE ASSY-	108120	RF
- 302	286N1250-751	WIRE BUNDLE ASSY	103106	RF
310	BACC45FN20-25S	.RECEPTACLE-	103106	1
		ELECTRICAL EQUIP NUMBER:	108120	
		D41934J		
		WIRING DIAGRAM REF:		
		212511		
315	BACC45FN20-25P6	.CONNECTOR-	103106	1
		ELECTRICAL EQUIP NUMBER:	108120	
		D41746J		
		WIRING DIAGRAM REF:		
		245311		
320	BACC45FN14-12P7	.CONNECTOR-	103106	1
		ELECTRICAL EQUIP NUMBER:	108120	
		D42166J		
		WIRING DIAGRAM REF:		
		282211		

MISSING ITEM NUMBERS NOT APPLICABLE

- ITEM NOT ILLUSTRATED

BOEING PROPRIETARY - Copyright © - Unpublished Work - See title page for details.

FIG ITEM	PART NUMBER	1 2 3 4 5 6 7 NOMENCLATURE	EFFECT FROM TO	UNITS PER ASSY
5				
325	BACC45FN20-25S8	.RECEPTACLE- ELECTRICAL EQUIP NUMBER: D41942J WIRING DIAGRAM REF: 214411	103106 108120	1
330	BACC45FN20-39P9	.RECEPTACLE- ELECTRICAL EQUIP NUMBER: D42074J WIRING DIAGRAM REF: 212511	103106 108120	1
335	BACC45FN20-28S	.CONNECTOR- ELECTRICAL EQUIP NUMBER: D40022J WIRING DIAGRAM REF: 282511	103106 108120	1
340	YHLZ16-2	.MODULE- SUPPLIER CODE: V09922 SPECIFICATION NUMBER: BACM15C3A OPTIONAL PART: TBH120450 V58982 421120-450 V58982 ELECTRICAL EQUIP NUMBER: TB0155X WIRING DIAGRAM REF: 212511 214311	103106 108120	1
345	YHLZ16-4	.MODULE- SUPPLIER CODE: V09922 SPECIFICATION NUMBER: BACM15C3B OPTIONAL PART: 421120-452 V58982 TBH120452 V58982 ELECTRICAL EQUIP NUMBER: TB0155Y WIRING DIAGRAM REF: 212511 214311	103106 108120	1
- 400	286N1252-343	WIRE BUNDLE ASSY	108120	1
- 401	286N1252-602	WIRE BUNDLE ASSY	103106	1

MISSING ITEM NUMBERS NOT APPLICABLE

- ITEM NOT ILLUSTRATED

BOEING PROPRIETARY - Copyright © - Unpublished Work - See title page for details.

FIG ITEM	PART NUMBER	1 2 3 4 5 6 7 NOMENCLATURE	EFFECT FROM TO	UNITS PER ASSY
5				
410	BACC45FN20-39S6	.RECEPTACLE-	103106	1
		ELECTRICAL EQUIP NUMBER:	108120	
		D41880J		
		WIRING DIAGRAM REF:		
		214511		
415	BACC45FN20-28P7	.CONNECTOR-	103106	1
		SUPPLIER CODE:	108120	
		V41118		
		SPECIFICATION NUMBER:		
		BACC45FN20-28P7		
		OPTIONAL PART:		
		C48-10R20-28P7-		
		V13556		
		ZZWAC1720-28P7		
		V49367		
		48-10R20-28P7-3		
		V02660		
		ELECTRICAL EQUIP NUMBER:		
		D41968J		
		WIRING DIAGRAM REF:		
		261621		
420	BACC45FN22-12S8	.RECEPTACLE-	103106	1
		ELECTRICAL EQUIP NUMBER:	108120	
		D41754J		
		WIRING DIAGRAM REF:		
		304111		
- 450	286N4004-302	WIRE BUNDLE ASSY-	108120	1
- 455	286N6678-701	WIRE BUNDLE ASSY	103106	1
460	BACC45FT20D25P	.PLUG-	103106	1
		ELECTRICAL EQUIP NUMBER:	108120	
		D41934P		
		WIRING DIAGRAM REF:		
		212511		
- 500	286N2256-303	WIRE BUNDLE ASSY	108120	RF
- 501	286N2256-701	WIRE BUNDLE ASSY	103106	RF
510	BACC45FT20D25S6	.PLUG-	103106	1
		ELECTRICAL EQUIP NUMBER:	108120	
		D41746P		
		WIRING DIAGRAM REF:		
		245311		
- 550	286N2070-337	WIRE BUNDLE ASSY	108120	RF
- 553	286N2070-601	WIRE BUNDLE ASSY	103106	RF
560	BACC45FT14D12S7	.CONNECTOR-	103106	1
		ELECTRICAL EQUIP NUMBER:	108120	
		D42166P		
		WIRING DIAGRAM REF:		
		282211		
- 600	286N2634-316	WIRE BUNDLE ASSY	108120	1
- 605	286N6600-701	WIRE BUNDLE ASSY	103106	1

MISSING ITEM NUMBERS NOT APPLICABLE

- ITEM NOT ILLUSTRATED

BOEING PROPRIETARY - Copyright © - Unpublished Work - See title page for details.

FIG ITEM	PART NUMBER	1 2 3 4 5 6 7 NOMENCLATURE	EFFECT FROM TO	UNITS PER ASSY
5				
610	BACC45FT20D25P8	.PLUG-	103106	1
		ELECTRICAL EQUIP NUMBER:	108120	
		D41942P		
		WIRING DIAGRAM REF:		
		214311		
		214411		
- 650	286N2066-346	WIRE BUNDLE ASSY	108120	1
- 653	286N2066-602	WIRE BUNDLE ASSY	103106	1
660	BACC45FT20D39S9	.PLUG-	103106	1
		ELECTRICAL EQUIP NUMBER:	108120	
		D42074P		
		WIRING DIAGRAM REF:		
		212511		
- 701	286N4210-335	WIRE BUNDLE ASSY-	108120	1
- 705	286N6650-601	WIRE BUNDLE ASSY	103106	1
710	BACC45FT20D28P	.PLUG-	103106	1
		ELECTRICAL EQUIP NUMBER:	108120	
		D40022P		
		WIRING DIAGRAM REF:		
		282511		
		284221		
- 750	286N2352-348	WIRE BUNDLE ASSY	108120	1
- 752	286N2352-751	WIRE BUNDLE ASSY-	103106	1
760	BACC45FT20D39P6	.PLUG-	103106	1
		ELECTRICAL EQUIP NUMBER:	108120	
		D41880P		
		WIRING DIAGRAM REF:		
		214411		
		332311		
765	BACC45FT22D12P8	.PLUG-	103106	1
		ELECTRICAL EQUIP NUMBER:	108120	
		D41754P		
		WIRING DIAGRAM REF:		
		304111		
- 800	286N2358-335	WIRE BUNDLE ASSY	108120	1
- 805	286N2378-601	WIRE BUNDLE ASSY	103106	RF
810	BACC45FT20D28S7	.PLUG-	103106	1
		ELECTRICAL EQUIP NUMBER:	108120	
		D41968P		
		WIRING DIAGRAM REF:		
		275161		

MISSING ITEM NUMBERS NOT APPLICABLE

- ITEM NOT ILLUSTRATED

BOEING PROPRIETARY - Copyright © - Unpublished Work - See title page for details.

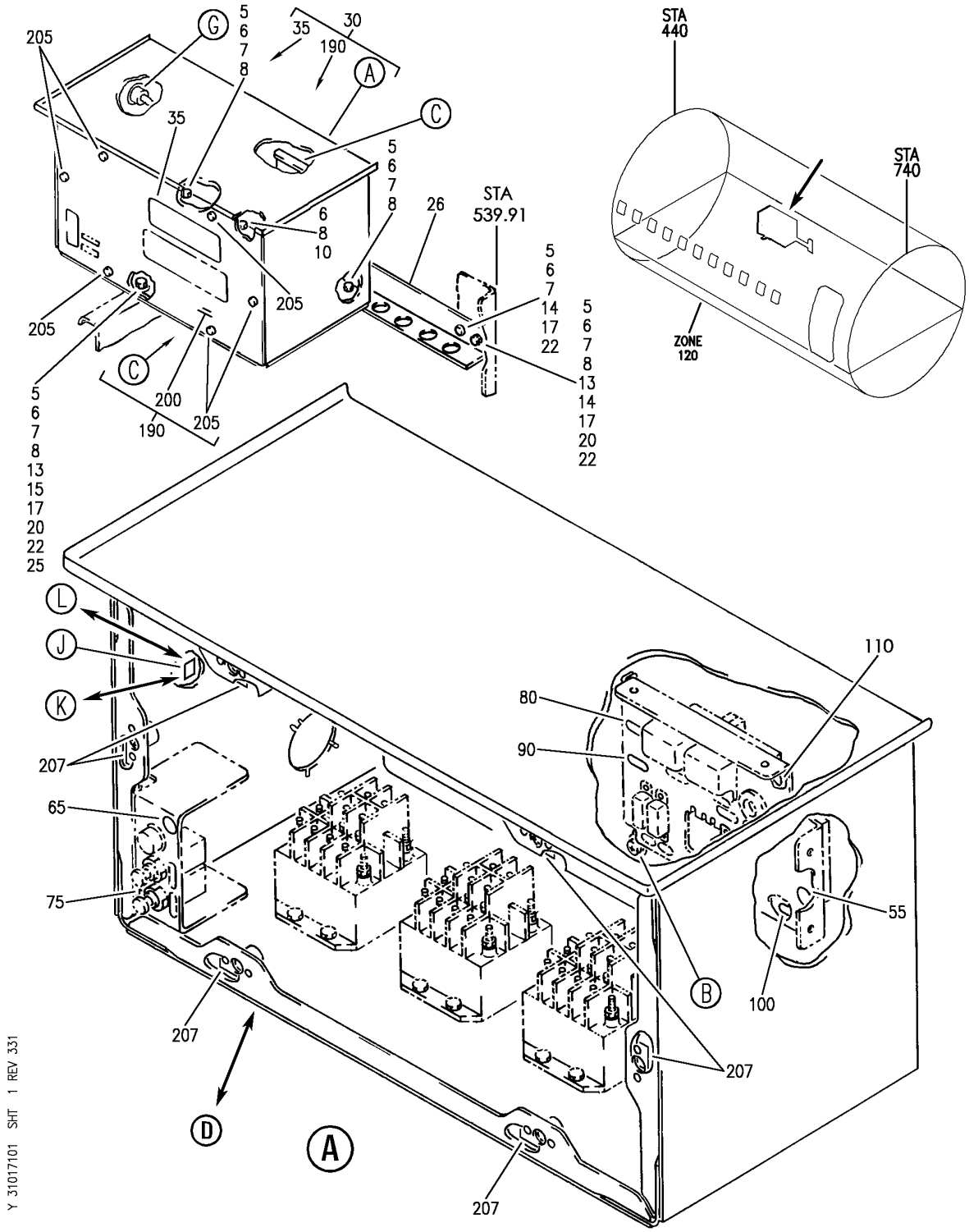

SHIELD, EQUIPMENT AND KIT INSTL P-71 HYDR GEN CONT
FIGURE 1 (SHEET 1)

BOEING PROPRIETARY - Copyright © - Unpublished Work - See title page for details.

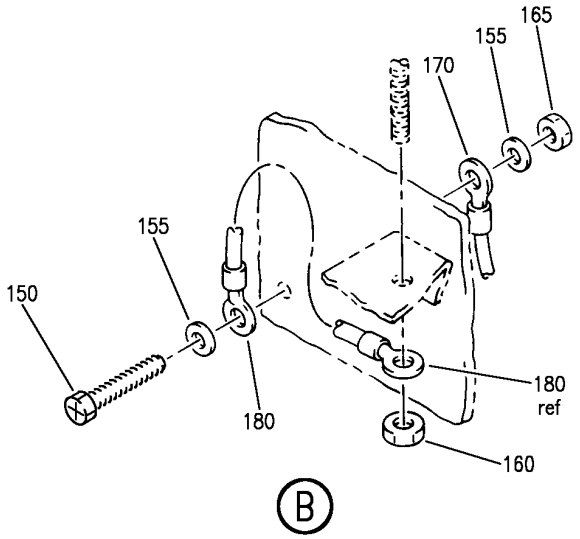

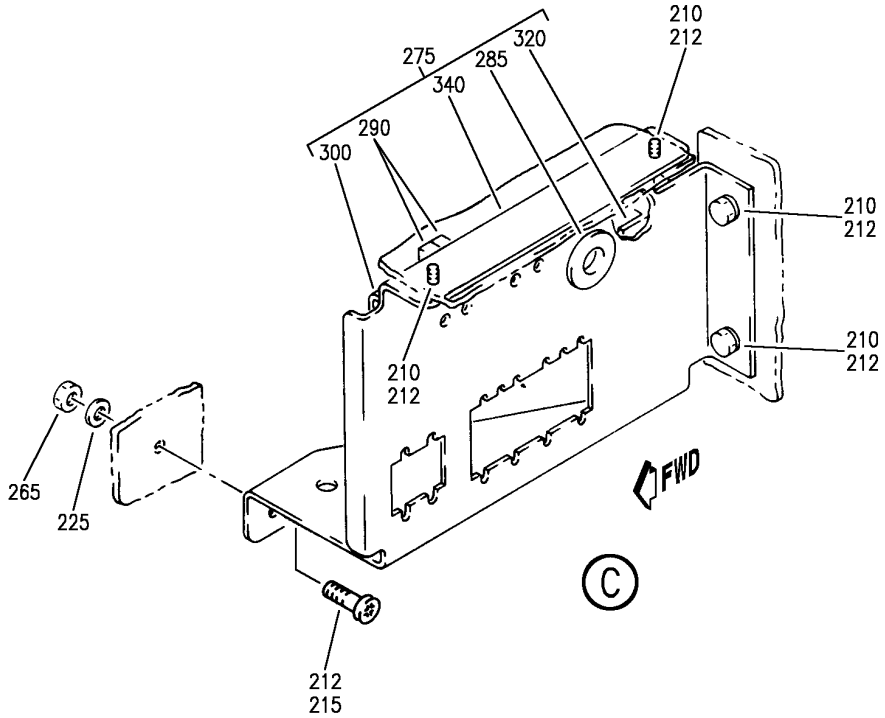

Y 31017101 SHT 2 REV 295

SHIELD, EQUIPMENT AND KIT INSTL P-71 HYDR GEN CONT
FIGURE 1 (SHEET 2)

BOEING PROPRIETARY - Copyright © - Unpublished Work - See title page for details.

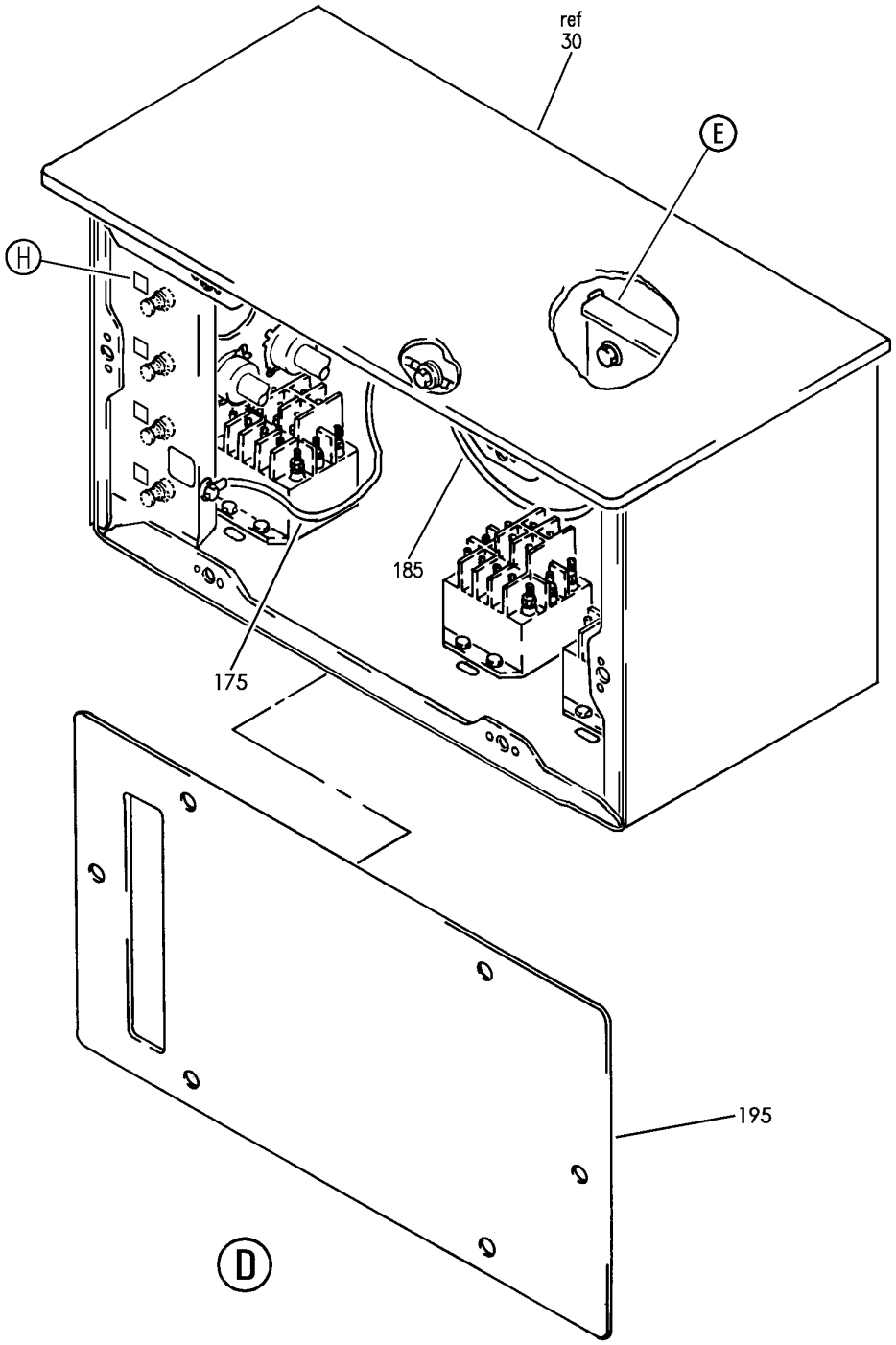

Y 31017101 SHT 3 REV 295

SHIELD, EQUIPMENT AND KIT INSTL P-71 HYDR GEN CONT
FIGURE 1 (SHEET 3)

BOEING PROPRIETARY - Copyright © - Unpublished Work - See title page for details.

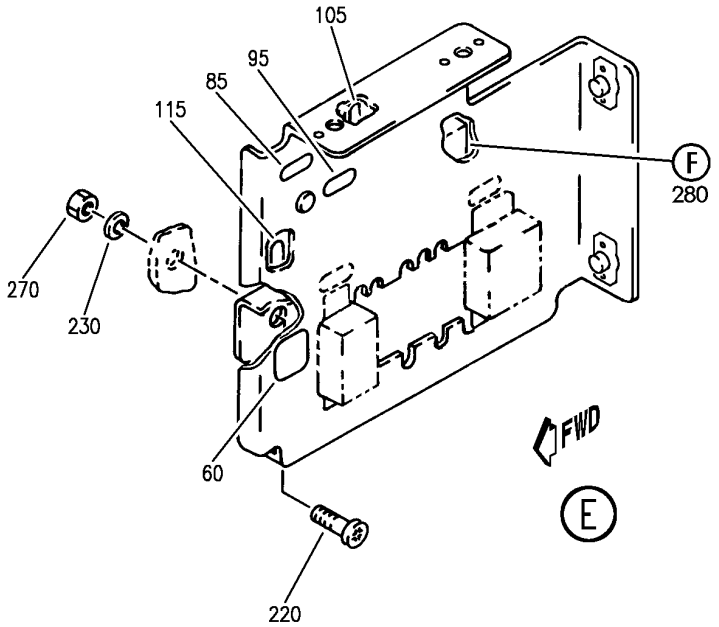

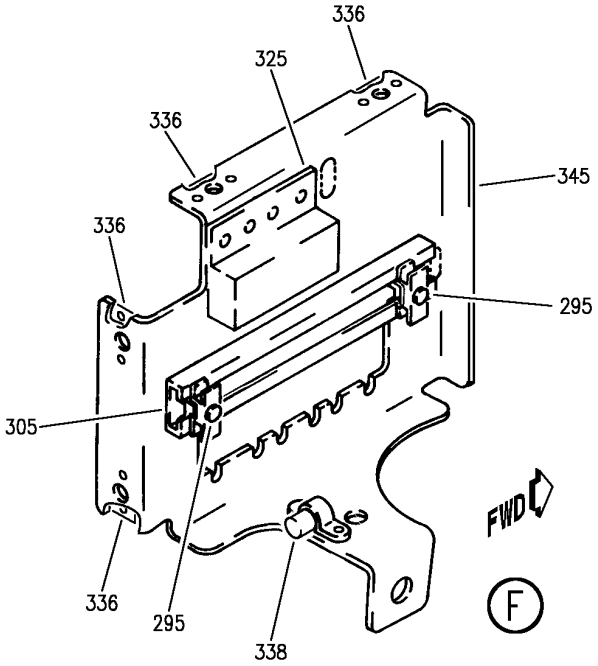

Y 31017101 SHT 4 REV 307

SHIELD, EQUIPMENT AND KIT INSTL P-71 HYDR GEN CONT
FIGURE 1 (SHEET 4)

BOEING PROPRIETARY - Copyright © - Unpublished Work - See title page for details.

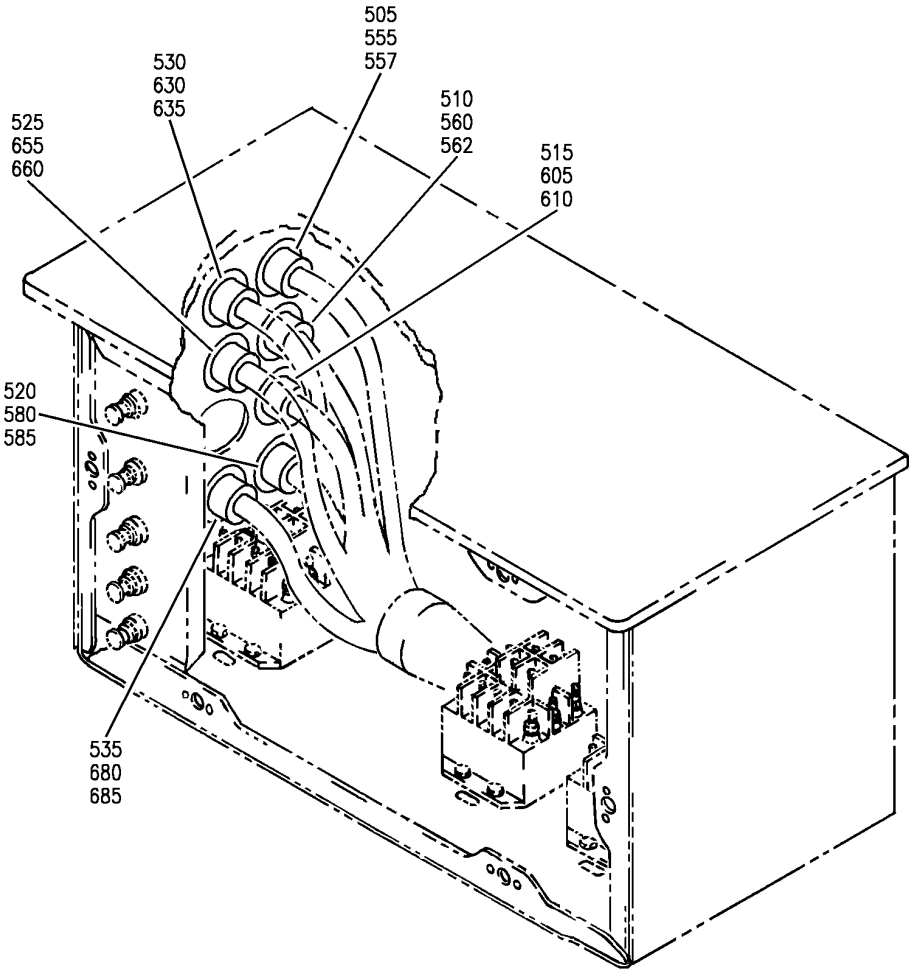

G

Y 31017101 SHT 5 REV 269

SHIELD, EQUIPMENT AND KIT INSTL P-71 HYDR GEN CONT
FIGURE 1 (SHEET 5)

BOEING PROPRIETARY - Copyright © - Unpublished Work - See title page for details.

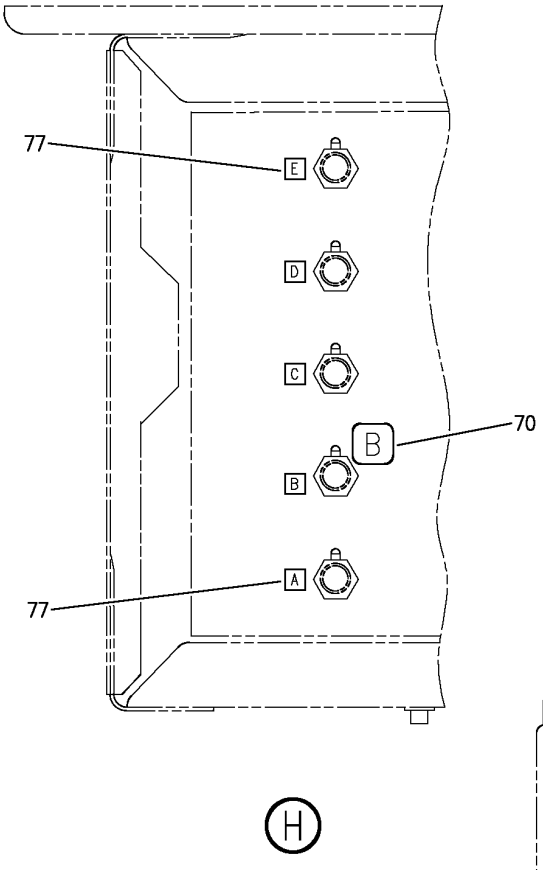

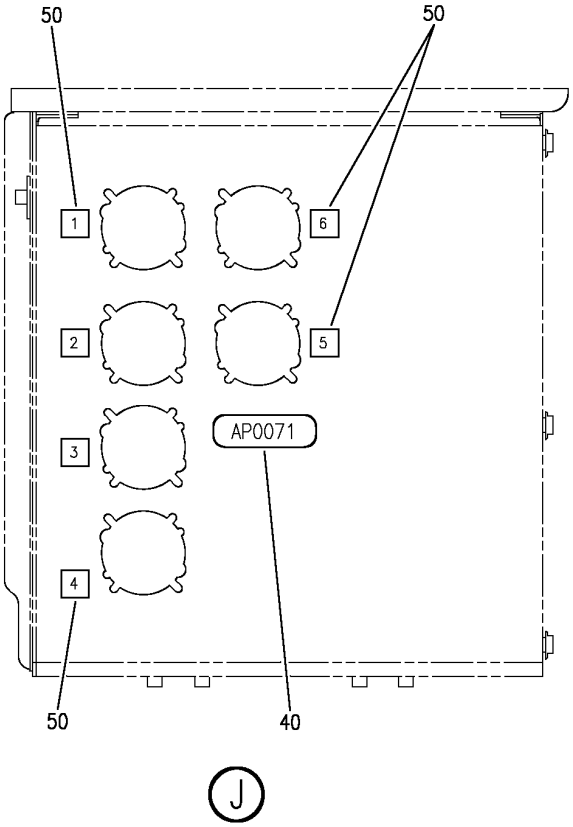

Y 31017101 SHT 6 REV 307

SHIELD, EQUIPMENT AND KIT INSTL P-71 HYDR GEN CONT
FIGURE 1 (SHEET 6)

BOEING PROPRIETARY - Copyright © - Unpublished Work - See title page for details.

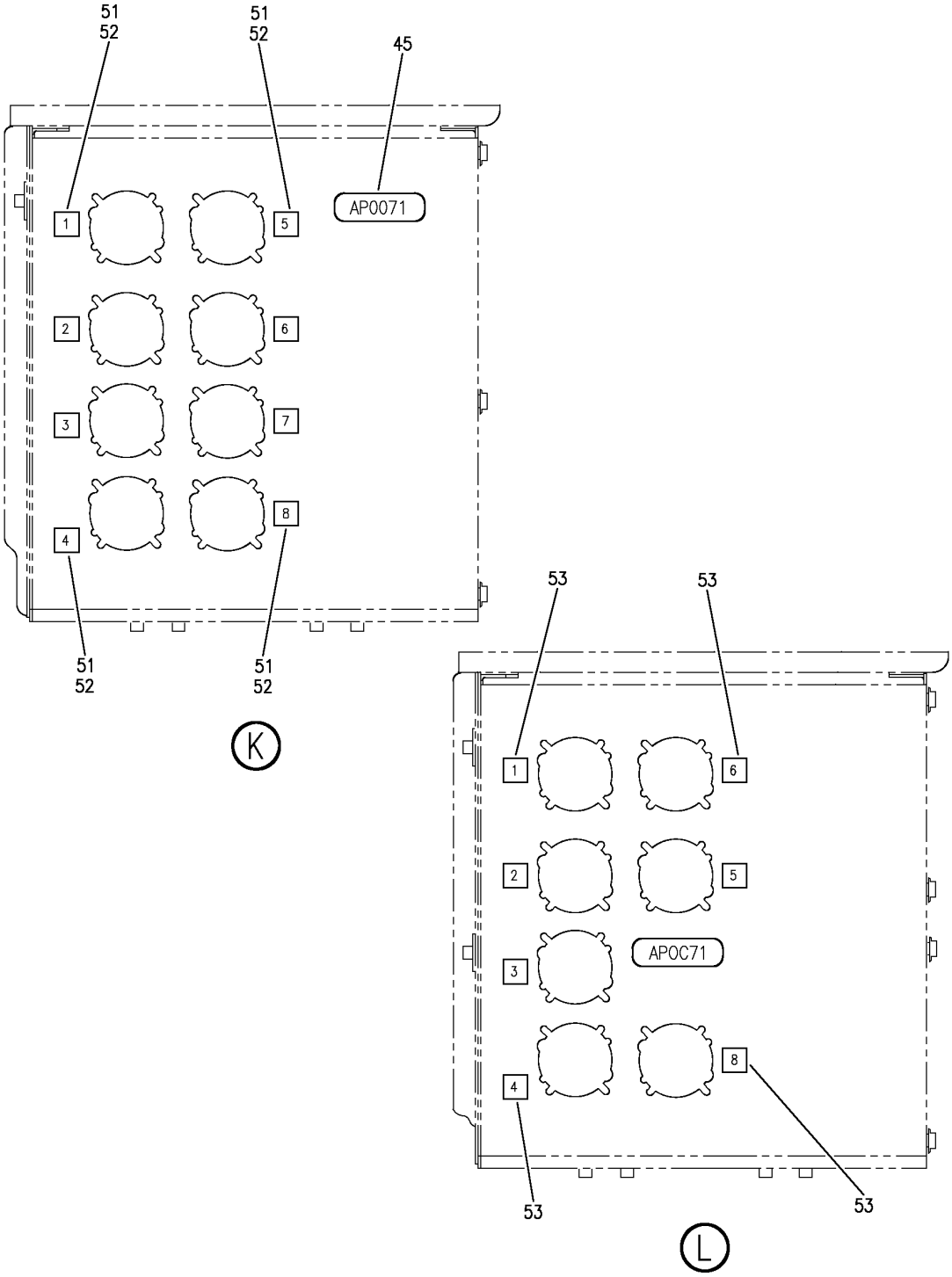

Y 31017101 SHT 7 REV 331

SHIELD, EQUIPMENT AND KIT INSTL P-71 HYDR GEN CONT
FIGURE 1 (SHEET 7)

BOEING PROPRIETARY - Copyright © - Unpublished Work - See title page for details.

FIG ITEM	PART NUMBER	1 2 3 4 5 6 7 NOMENCLATURE	EFFECT FROM TO	UNITS PER ASSY
1		SHIELD, EQUIPMENT AND KIT INSTL P-71 HYDR GEN CONT	002004 006503 904949 952999	
- 1	284N1789-2	SHIELD INSTL-P71 HYDR GEN CONT FOR NHA SEE: 24-00-58-01C	904949	RF
- 1	284N1789-4	SHIELD INSTL-P71 HYDR GEN CONT FOR NHA SEE: 24-00-58-01C	952952	RF
- 1	284N1789-9	SHIELD INSTL-P71 HYDR GEN CONT FOR NHA SEE: 24-00-58-01C	121503	RF
- 1	284N1789-11	SHIELD INSTL-P71 HYDR GEN CONT FOR NHA SEE: 24-00-58-01C	002004	RF
- 1	284N1789-13	SHIELD INSTL-P71 HYDR GEN CONT FOR NHA SEE: 24-00-58-01C	006100 953999	RF
- 1	284N1789-100	SHIELD INSTL-P71 HYDR GEN CONT FOR NHA SEE: 24-00-58-05E	101102 108120	RF
- 1	MODREF9336	SHIELD INSTL-P71 HYDR GEN CONT MODULE NUMBER: 284N1789-100 REV A	103106	1
5	NAS6604-3	.BOLT	002004 006106 108503 904949 952999	5
10	NAS6604-4	.BOLT	002004 006106 108503 904949 952999	1
15	AN960D416L	.WASHER	002004 006100 121503 904949 952999	1
15	NAS1149D0416H	.WASHER	101106 108120	1

MISSING ITEM NUMBERS NOT APPLICABLE

- ITEM NOT ILLUSTRATED

BOEING PROPRIETARY - Copyright © - Unpublished Work - See title page for details.

FIG ITEM	PART NUMBER	1 2 3 4 5 6 7 NOMENCLATURE	EFFECT FROM TO	UNITS PER ASSY
1				
25	MS21042L4	.NUT	002004 006100 121503 904949 952999	1
25	PLH54CD	.NUT SUPPLIER CODE: VF0224 SPECIFICATION NUMBER: BACN10YR4CD OPTIONAL PART: H52732-4CD V15653	101106 108120	1
26	284N1792-35	.ANGLE-SPRT	002004 006106 108503 904949 952999	1
30	284N1790-2	.SHIELD ASSY- FUNCTIONAL REFERENCE: ELECTRICAL POWER FOR DETAILS SEE 24-25-02-01 24-25-51-02 PLACARDS AND MARKINGS FOR DETAILS SEE 11-36-27-01	904949	1
30	284N1790-4	.SHIELD ASSY- FUNCTIONAL REFERENCE: ELECTRICAL POWER FOR DETAILS SEE 24-25-02-01 24-25-51-02 PLACARDS AND MARKINGS FOR DETAILS SEE 11-36-27-01	952952	1
30	284N1790-10	.SHIELD ASSY- REWORK DRAWING REF: 284N1790-12 FUNCTIONAL REFERENCE: ELECTRICAL POWER FOR DETAILS SEE 24-25-02-01 24-25-51-02 PLACARDS AND MARKINGS FOR DETAILS SEE 11-36-27-01	002004	1

MISSING ITEM NUMBERS NOT APPLICABLE

– ITEM NOT ILLUSTRATED

BOEING PROPRIETARY - Copyright © - Unpublished Work - See title page for details.

FIG ITEM	PART NUMBER	1 2 3 4 5 6 7 NOMENCLATURE	EFFECT FROM TO	UNITS PER ASSY
1				
30	284N1790-14	.SHIELD ASSY- FUNCTIONAL REFERENCE: ELECTRICAL POWER FOR DETAILS SEE 24-25-02-01 24-25-51-02 PLACARDS AND MARKINGS FOR DETAILS SEE 11-36-27-01	121503	1
30	284N1790-16	.SHIELD ASSY- FUNCTIONAL REFERENCE: ELECTRICAL POWER FOR DETAILS SEE 24-25-02-01 24-25-51-02 PLACARDS AND MARKINGS FOR DETAILS SEE 11-36-27-01	006100 953999	1
35	BAC27NEX2055	..DECAL- PLACARD CONTENT: P71 PANEL HYD GEN PWR	002004 006100 121503 904949 952999	1
40	BAC27NEX2052	..DECAL- PLACARD CONTENT: AP0071	904949 952952	1
45	BAC27NEX2052	..DECAL- PLACARD CONTENT: AP0071	002004 006100 121503 953999	1
50	BAC27NEX0938	..DECAL- PLACARD CONTENT: 1 THRU 5 REWORK DRAWING REF: 284N1790-12	002004 904949 952952	AR
51	BAC27NEX0938	..DECAL- PLACARD CONTENT: 1 THRU 8	006100 121503 953999	AR
55	BAC27NEX0173	..DECAL- PLACARD CONTENT: A	904949 952952	1
60	BAC27NEX0173	..DECAL- PLACARD CONTENT: A	002004 006100 121503 953999	1
65	BAC27NEX0174	..DECAL- PLACARD CONTENT: B	904949 952952	1

MISSING ITEM NUMBERS NOT APPLICABLE

– ITEM NOT ILLUSTRATED

BOEING PROPRIETARY - Copyright © - Unpublished Work - See title page for details.

FIG ITEM	PART NUMBER	1 2 3 4 5 6 7 NOMENCLATURE	EFFECT FROM TO	UNITS PER ASSY
1				
70	BAC27NEX0174	..DECAL-	002004	1
		PLACARD CONTENT:	006100	
		B	121503	
			953999	
75	BAC27TEX0105	..DECAL-	002004	1
		PLACARD CONTENT:	006100	
		A THRU T	121503	
			904949	
			952999	
80	BAC27NEX2059	..DECAL-	904949	1
		PLACARD CONTENT:	952952	
		GD3148ST		
85	BAC27NEX2059	..DECAL-	002004	1
		PLACARD CONTENT:	006100	
		GD3148ST	121503	
			953999	
90	BAC27NEX2053	..DECAL-	904949	1
		PLACARD CONTENT:	952952	
		GD3144AC		
95	BAC27NEX2053	..DECAL-	002004	1
		PLACARD CONTENT:	006100	
		GD3144AC	121503	
			953999	
100	BAC27NEX2061	..DECAL-	904949	1
		PLACARD CONTENT:	952952	
		GD4002		
105	BAC27NEX2061	..DECAL-	002004	1
		PLACARD CONTENT:	006100	
		GD4002	121503	
			953999	
110	BAC27NEX2054	..DECAL-	904949	1
		PLACARD CONTENT:	952952	
		TB0103		
115	BAC27NEX2054	..DECAL-	002004	1
		PLACARD CONTENT:	006100	
		TB0103	121503	
			953999	
150	NAS1801-4-10	..SCREW	002004	1
			006100	
			121503	
			904949	
			952999	
155	AN960D416L	..WASHER-	002004	2
			006100	
			121503	
			904949	
			952999	

MISSING ITEM NUMBERS NOT APPLICABLE

– ITEM NOT ILLUSTRATED

BOEING PROPRIETARY - Copyright © - Unpublished Work - See title page for details.

FIG ITEM	PART NUMBER	1 2 3 4 5 6 7 NOMENCLATURE	EFFECT FROM TO	UNITS PER ASSY
1				
160	MS21042L3	..NUT	002004 006100 121503 904949 952999	1
165	MS21042L4	..NUT	002004 006100 121503 904949 952999	1
170	RBEJ40E20-40	..JUMPER SUPPLIER CODE: V1GK47 SPECIFICATION NUMBER: BACJ40E20-40 OPTIONAL PART: 740E20-40 V91812	002004 006100 121503 904949 952999	1
175	287N1404-2	..JUMPER ASSY	002004 006100 121503 953999	1
180	287N1404-24	..JUMPER ASSY-	904949 952952	1
185	287N1404-25	..JUMPER ASSY	002004 006100 121503 953999	1
190	284N1791-2	..BOX ASSY-	904949	1
190	284N1791-3	..BOX ASSY	952952	1
190	284N1791-5	..BOX ASSY	002004	1
190	284N1791-6	..BOX ASSY	006100 121503 953999	1
195	284N1792-45	...PANEL ASSY-FRONT	002004 006100 121503 953999	1
200	284N1792-32	...PANEL ASSY-FRONT	904949 952952	1
205	BACS21Y3R	....STUD ASSY	002004 006100 121503 904949 952999	6

MISSING ITEM NUMBERS NOT APPLICABLE

– ITEM NOT ILLUSTRATED

BOEING PROPRIETARY - Copyright © - Unpublished Work - See title page for details.

FIG ITEM	PART NUMBER	1 2 3 4 5 6 7 NOMENCLATURE	EFFECT FROM TO	UNITS PER ASSY
1				
210	NAS1801-3-7	...SCREW	002004 006100 121503 904949 952999	4
215	NAS1801-3-7	...SCREW-	904949 952952	1
220	NAS1801-3-7	...SCREW	002004 006100 121503 953999	1
225	AN960JD10L	...WASHER-	904949 952952	1
230	AN960JD10L	...WASHER	002004 006100 121503 953999	1
265	MS21042L3	...NUT-	904949 952952	1
270	MS21042L3	...NUT	002004 006100 121503 953999	1
275	284N1792-38	...PLATE ASSY-MTG	904949 952952	1
280	284N1792-43	...PLATE ASSY-MTG	002004 006100 121503 953999	1
285	RR2002-5B2	....GROMMET SUPPLIER CODE: V57268 SPECIFICATION NUMBER: BACG20AF5B2 OPTIONAL PART: H5B2 V60980 701-5B2 V07096 SZ6924-5B2 V95272 G6940-5B2 V75345 E5B2 V60980	904949 952952	1

MISSING ITEM NUMBERS NOT APPLICABLE

– ITEM NOT ILLUSTRATED

BOEING PROPRIETARY - Copyright © - Unpublished Work - See title page for details.

FIG ITEM	PART NUMBER	1 2 3 4 5 6 7 NOMENCLATURE	EFFECT FROM TO	UNITS PER ASSY
1				
290	H49-2	....CLAMP-END	904949	2
		SUPPLIER CODE:	952952	
		V34941		
		SPECIFICATION NUMBER:		
		BACC49A2		
		OPTIONAL PART:		
		MF104-2		
		V6E102		
295	H49-2	....CLAMP-END	002004	2
		SUPPLIER CODE:	006100	
		V34941	121503	
		SPECIFICATION NUMBER:	953999	
		BACC49A2		
		OPTIONAL PART:		
		MF104-2		
		V6E102		
300	AMY0300T5	....TRACK	904949	1
		SUPPLIER CODE:	952952	
		V09922		
		SPECIFICATION NUMBER:		
		BACT44B0300U		
305	AMY0450T5	....TRACK	002004	1
		SUPPLIER CODE:	006100	
		V09922	121503	
		SPECIFICATION NUMBER:	953999	
		BACT44B0450U		
		ATTACHING PARTS		
- 310	BACR15BA3D	....RIVET-	904949	3
		SIZE DETERMINED ON INSTL.	952952	
- 315	BACR15BA3AD	....RIVET-	002004	3
		SIZE DETERMINED ON INSTL.	006100	
			121503	
			953999	
		-------*-------		
320	YHLZG16-1	....BLOCK-	904949	1
		SUPPLIER CODE:	952952	
		V09922		
325	YHLZG16-1	....BLOCK-	002004	1
		SUPPLIER CODE:	006100	
		V09922	121503	
			953999	
		ATTACHING PARTS		
- 330	BACR15FT5D	....RIVET-	904949	4
		SIZE DETERMINED ON INSTL.	952952	
- 335	BACR15FT5D	....RIVET-	002004	4
		SIZE DETERMINED ON INSTL.	006100	
			121503	
			953999	
		-------*-------		

MISSING ITEM NUMBERS NOT APPLICABLE

- ITEM NOT ILLUSTRATED

BOEING PROPRIETARY - Copyright © - Unpublished Work - See title page for details.

FIG ITEM	PART NUMBER	1 2 3 4 5 6 7 NOMENCLATURE	EFFECT FROM TO	UNITS PER ASSY
1				
336	MF53049-3	....NUTPLATE	002004	4
		SUPPLIER CODE:	006100	
		V15653	121503	
		SPECIFICATION NUMBER:	953999	
		BACN10JN3		
		OPTIONAL PART:		
		BRFM20A3		
		V52828		
		MF1000-3BAC		
		V15653		
		NS103218-02		
		V80539		
		RMF9201M3		
		V72962		
		VN252A02		
		V92215		
		T8124S3S		
		V11815		
		ATTACHING PARTS		
- 337	BACR15BA3AD	....RIVET-	002004	4
		SIZE DETERMINED ON INSTL.	006100	
			121503	
			953999	
		-------*-------		
338	BACN10GH3A12	....NUTPLATE	002004	2
			006100	
			121503	
			953999	
		ATTACHING PARTS		
- 339	BACR15BB3AD	....RIVET-	002004	2
		SIZE DETERMINED ON INSTL.	006100	
			121503	
			953999	
		-------*-------		
340	284N1792-39	....BRACKET-MTG	904949	1
			952952	
345	284N1792-44	....BRACKET-MTG	002004	1
			006100	
			121503	
			953999	
- 500	286N1254-001	WIRE BUNDLE ASSY-	107107	RF
			904949	
- 500	286N1254-003	WIRE BUNDLE ASSY	952952	RF
- 500	286N1254-005	WIRE BUNDLE ASSY-	002004	RF
			006100	
			121503	
			953999	
- 500	286N1254-301	WIRE BUNDLE ASSY	101102	RF
			108120	

MISSING ITEM NUMBERS NOT APPLICABLE

- ITEM NOT ILLUSTRATED

BOEING PROPRIETARY - Copyright © - Unpublished Work - See title page for details.

FIG ITEM	PART NUMBER	1 2 3 4 5 6 7 NOMENCLATURE	EFFECT FROM TO	UNITS PER ASSY
1				
505	BACC45FN16-10S6	.RECEPTACLE-	002004	1
		POSITION DATA:	006100	
		POS 01	121503	
		ELECTRICAL EQUIP NUMBER:	904949	
		D40416J	952999	
		WIRING DIAGRAM REF:		
		245115		
510	BACC45FN22-12S8	.RECEPTACLE-	002004	1
		POSITION DATA:	006100	
		POS 02	121503	
		ELECTRICAL EQUIP NUMBER:	904949	
		D40452J	952999	
		WIRING DIAGRAM REF:		
		245115		
515	BACC45FN14-15S	.CONNECTOR-	002004	1
		ELECTRICAL EQUIP NUMBER:	006100	
		D40270J	121503	
		WIRING DIAGRAM REF:	904949	
		242513	952999	
520	BACC45FN22-12S7	.RECEPTACLE-	002004	1
		POSITION DATA:	006100	
		POS 04	121503	
		ELECTRICAL EQUIP NUMBER:	904949	
		D40460J	952999	
		WIRING DIAGRAM REF:		
		245125		
525	BACC45FN16-24S	.CONNECTOR-	002004	1
		POSITION DATA:	006100	
		POS 05	121503	
		ELECTRICAL EQUIP NUMBER:	904949	
		D40450J	952999	
		WIRING DIAGRAM REF:		
		242512		
530	BACC45FN18-8S7	.RECEPTACLE-	002004	1
		POSITION DATA:	006100	
		POS 06	121503	
		ELECTRICAL EQUIP NUMBER:	904949	
		D40418J	952999	
		WIRING DIAGRAM REF:		
		242512		
535	BACC45FN14-15S	.CONNECTOR-	002004	1
		ELECTRICAL EQUIP NUMBER:	006100	
		D41390J	121503	
		WIRING DIAGRAM REF:	904949	
		242512	952999	

MISSING ITEM NUMBERS NOT APPLICABLE

– ITEM NOT ILLUSTRATED

BOEING PROPRIETARY - Copyright © - Unpublished Work - See title page for details.

FIG ITEM	PART NUMBER	1 2 3 4 5 6 7 NOMENCLATURE	EFFECT FROM TO	UNITS PER ASSY
1				
- 550	286N2344-001	WIRE BUNDLE ASSY- POST SERVICE BULLETIN: 24-0116	002004 006100 121503 904949 952999	RF
555	BACC45FT16B10P6	.PLUG- ELECTRICAL EQUIP NUMBER: D40416P WIRING DIAGRAM REF: 245115	002004 006100 121503 904949 952999	1
560	BACC45FT22B12P8	.PLUG- ELECTRICAL EQUIP NUMBER: D40452P WIRING DIAGRAM REF: 245115	002004 006100 121503 904949 952999	1
- 575	286N2346-001	WIRE BUNDLE ASSY-	904949 952952	RF
- 575	286N2346-003	WIRE BUNDLE ASSY-	002004 006100 121503 953999	RF
580	BACC45FT22B12P7	.PLUG- ELECTRICAL EQUIP NUMBER: D40460P WIRING DIAGRAM REF: 245125	002004 006100 121503 904949 952999	1
- 600	286N2348-001	WIRE BUNDLE ASSY-	904949 952952	RF
- 600	286N2348-003	WIRE BUNDLE ASSY-	002004 006100 121503 953999	RF
605	BACC45FT14B15P	.PLUG- ELECTRICAL EQUIP NUMBER: D40270P WIRING DIAGRAM REF: 242513	904949 952952	1
605	BACC45FT16B24P	.PLUG- ELECTRICAL EQUIP NUMBER: D40270P WIRING DIAGRAM REF: 242513	002004 006017 121503 953999	1
605	BACC45FT16B24P6	.PLUG- ELECTRICAL EQUIP NUMBER: D40270P WIRING DIAGRAM REF: 242513	018100	1

MISSING ITEM NUMBERS NOT APPLICABLE

- ITEM NOT ILLUSTRATED

BOEING PROPRIETARY - Copyright © - Unpublished Work - See title page for details.

FIG ITEM	PART NUMBER	1 2 3 4 5 6 7 NOMENCLATURE	EFFECT FROM TO	UNITS PER ASSY
1				
- 625	286N2394-001	WIRE BUNDLE ASSY-	002004 006100 121503 904949 952999	RF
- 625	286N2394-501	WIRE BUNDLE ASSY	002004 006100 121503 904949 952999	RF
630	BACC45FT18B8P7	.PLUG- ELECTRICAL EQUIP NUMBER: D40418P WIRING DIAGRAM REF: 242512	002004 006100 121503 904949 952999	1
- 650	286N2396-001	WIRE BUNDLE ASSY-	904949 952952	RF
- 650	286N2396-003	WIRE BUNDLE ASSY-	002004 006100 121503 953999	RF
655	BACC45FT16B24P	.PLUG- ELECTRICAL EQUIP NUMBER: D40450P WIRING DIAGRAM REF: 242512	002004 006100 121503 904949 952999	1
- 675	286N2398-001	WIRE BUNDLE ASSY-	002004 006100 121503 953999	RF
680	BACC45FT14B15P	.PLUG- ELECTRICAL EQUIP NUMBER: D41390P WIRING DIAGRAM REF: 242512	002004 006100 121503 953999	1

MISSING ITEM NUMBERS NOT APPLICABLE

- ITEM NOT ILLUSTRATED

BOEING PROPRIETARY - Copyright © - Unpublished Work - See title page for details.

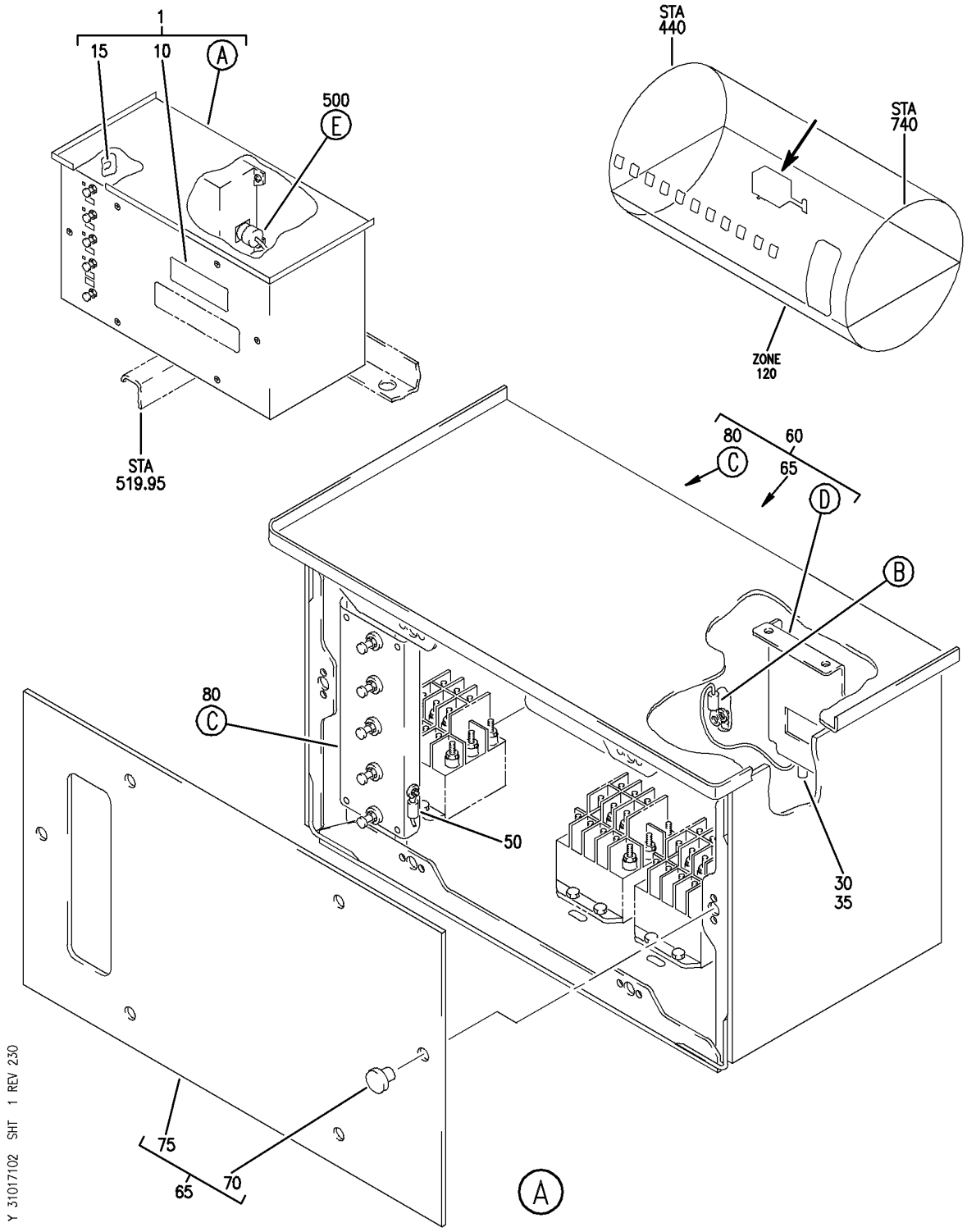

SHIELD INSTL-P71 HYDR GEN CONT (GENERATOR POWER PANEL ONLY)
FIGURE 2 (SHEET 1)

BOEING PROPRIETARY - Copyright © - Unpublished Work - See title page for details.

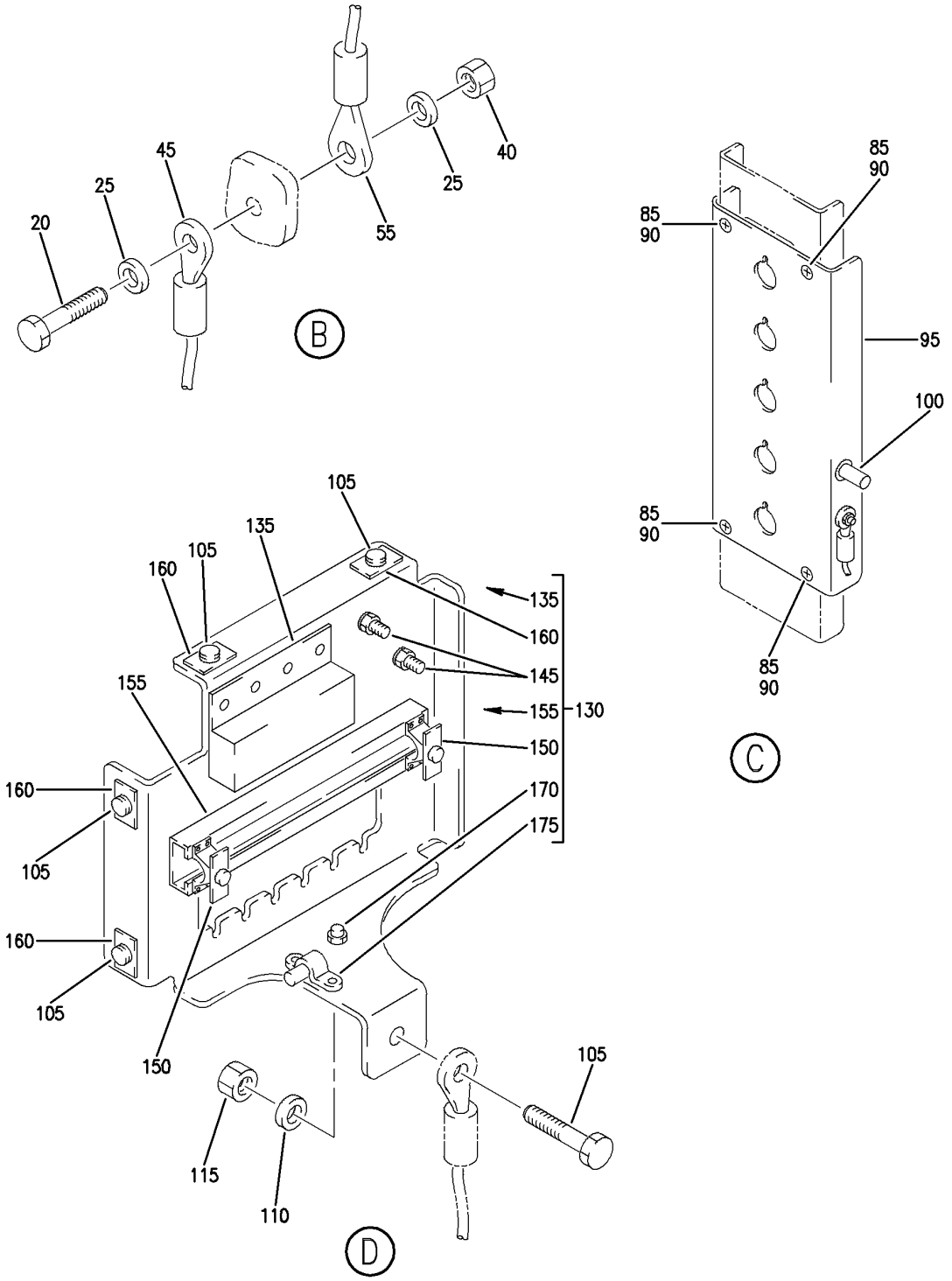

SHIELD INSTL-P71 HYDR GEN CONT (GENERATOR POWER PANEL ONLY)
FIGURE 2 (SHEET 2)

BOEING PROPRIETARY - Copyright © - Unpublished Work - See title page for details.

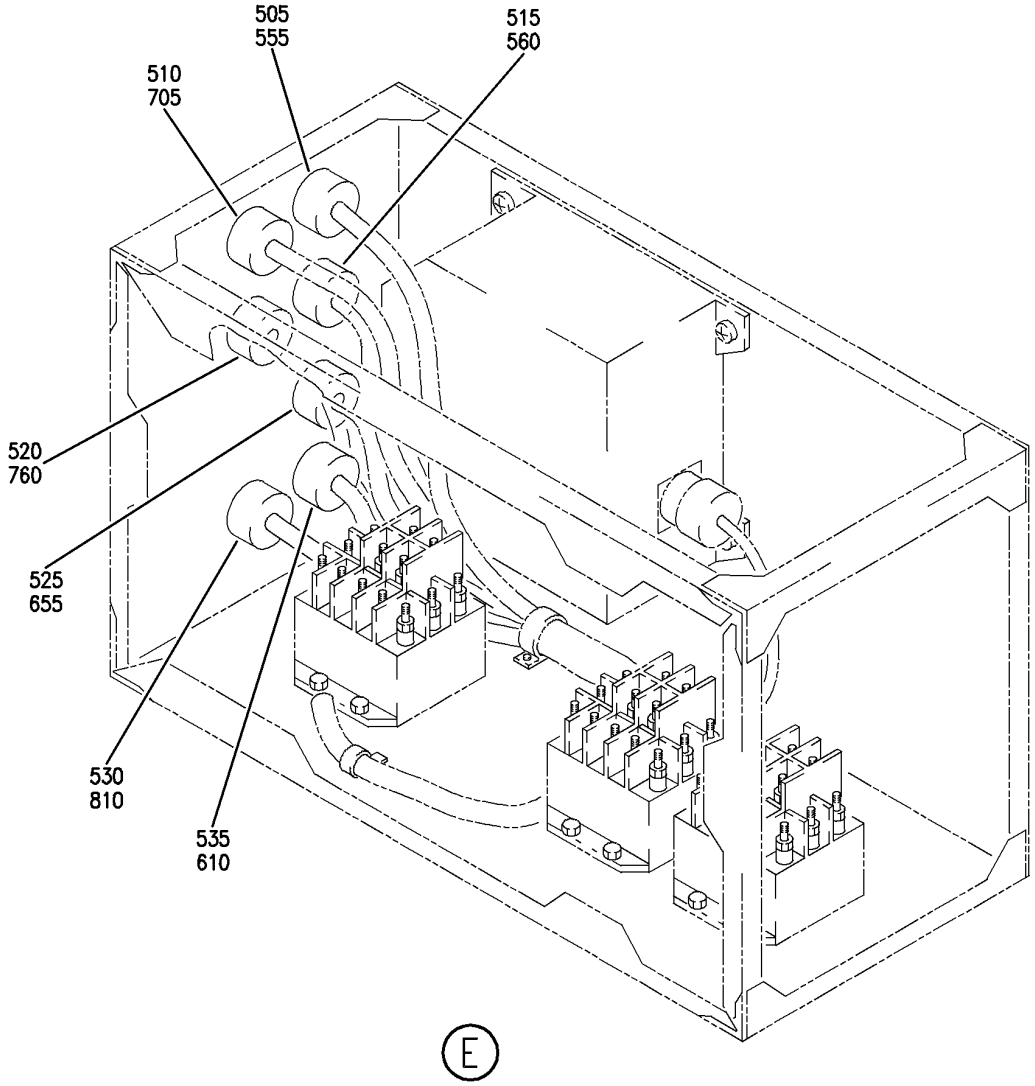

Y 31017102 SHT 3 REV 230

SHIELD INSTL-P71 HYDR GEN CONT (GENERATOR POWER PANEL ONLY)
FIGURE 2 (SHEET 3)

BOEING PROPRIETARY - Copyright © - Unpublished Work - See title page for details.

FIG ITEM	PART NUMBER	1 2 3 4 5 6 7 NOMENCLATURE	EFFECT FROM TO	UNITS PER ASSY
2				
		SHIELD INSTL-P71 HYDR GEN	101106	
		CONT (GENERATOR POWER	108120	
		PANEL ONLY)		
1	284N1790-100	SHIELD INSTL-P71 HYDR GEN	101102	RF
		CONT (GENERATOR POWER	108120	
		PANEL ONLY)		
		FOR NHA/OTHER SYS DET SEE:		
		24-00-58-05E		
1	MODREF31977	SHIELD INSTL-P71 HYDR GEN	103106	1
		CONT (GENERATOR POWER		
		PANEL ONLY)		
		MODULE NUMBER:		
		284N1790-102 REV C		
		FOR OTHER SYS DETAILS SEE:		
		11-36-27-03		
		24-25-51-03		
10	BAC27NEX2055	.DECAL-	101106	1
		PLACARD CONTENT:	108120	
		P71 PANEL HYD GEN PWR		
15	BAC27NEX2052	.DECAL-	101106	1
		PLACARD CONTENT:	108120	
		AP0071		
20	NAS1801-4-10	.SCREW	101106	1
			108120	
25	NAS1149D0416J	.WASHER	101102	2
			108120	
30	NAS1149D0316H	.WASHER	101106	1
			108120	
35	PLH53CD	.NUT	101106	1
		SUPPLIER CODE:	108120	
		VF0224		
		SPECIFICATION NUMBER:		
		BACN10YR3CD		
		OPTIONAL PART:		
		H52732-3CD		
		V15653		
40	PLH54CD	.NUT	101106	1
		SUPPLIER CODE:	108120	
		VF0224		
		SPECIFICATION NUMBER:		
		BACN10YR4CD		
		OPTIONAL PART:		
		H52732-4CD		
		V15653		

MISSING ITEM NUMBERS NOT APPLICABLE

– ITEM NOT ILLUSTRATED

BOEING PROPRIETARY - Copyright © - Unpublished Work - See title page for details.

FIG ITEM	PART NUMBER	1 2 3 4 5 6 7 NOMENCLATURE	EFFECT FROM TO	UNITS PER ASSY
2				
45	RBEJ40E20-40	.JUMPER SUPPLIER CODE: V1GK47 SPECIFICATION NUMBER: BACJ40E20-40 OPTIONAL PART: 740E20-40 V91812	101106 108120	1
50	287N1404-2	.JUMPER ASSY	101106 108120	1
55	287N1404-25	.JUMPER ASSY	101106 108120	1
60	284N1791-6	.BOX ASSY	101106 108120	1
65	284N1792-45	..PANEL ASSY	101106 108120	1
70	BACS21Y3R	...STUD ASSY	101106 108120	6
75	284N1792-46	...PANEL	101106 108120	1
80	284N1792-61	..PLATE ASSY-CB MTG	101106 108120	1
85	NAS514P832-8	...SCREW	101106 108120	4
90	MF53049-08	...NUT SUPPLIER CODE: V15653 SPECIFICATION NUMBER: BACN10JN08 OPTIONAL PART: BRFM20A08 V52828 MF1000-08BAC V15653 NS103218-82 V80539 RMF9201M82 V72962 VN252A82 V92215 T8124S08S V11815	101106 108120	4
95	284N1792-60	...PLATE-CB MTG	101106 108120	1

MISSING ITEM NUMBERS NOT APPLICABLE

— ITEM NOT ILLUSTRATED

BOEING PROPRIETARY - Copyright © - Unpublished Work - See title page for details.

FIG ITEM	PART NUMBER	1 2 3 4 5 6 7 NOMENCLATURE	EFFECT FROM TO	UNITS PER ASSY
2				
100	VNS1924CA1-8	...STUD SUPPLIER CODE: V5M902 SPECIFICATION NUMBER: BACS53B1EA1 OPTIONAL PART: VNS1924CA3-1-8 V92215	101106 108120	1
105	NAS1801-3-7	..SCREW	101106 108120	5
110	NAS1149D0332J	..WASHER	101106 108120	1
115	MS21042L3	..NUT	101106 108120	1
130	284N1792-43	..PLATE ASSY-MTG	101106 108120	1
135	YHLZG16-1	...BLOCK- SUPPLIER CODE: V09922 ATTACHING PARTS	101106 108120	1
- 140	BACR15BA3NAD	...RIVET- SIZE DETERMINED ON INSTL. -------*-------	101106 108120	3
145	VNS1924CA1-8	...STUD- SUPPLIER CODE: V5M902 SPECIFICATION NUMBER: BACS53B1EA1 OPTIONAL PART: VNS1924CA3-1-8 V92215 POSITION DATA: FS	101106 108120	2
150	H49-2	...CLAMP SUPPLIER CODE: V34941 SPECIFICATION NUMBER: BACC49A2 OPTIONAL PART: MF104-2 V6E102	101106 108120	2
155	AMY0450T5	...TRACK-TERMINAL SUPPLIER CODE: V09922 SPECIFICATION NUMBER: BACT44B0450U	101106 108120	1

MISSING ITEM NUMBERS NOT APPLICABLE

- ITEM NOT ILLUSTRATED

BOEING PROPRIETARY - Copyright © - Unpublished Work - See title page for details.

FIG ITEM	PART NUMBER	1 2 3 4 5 6 7 NOMENCLATURE	EFFECT FROM TO	UNITS PER ASSY
2				
160	MF53049-3	...NUTPLATE	101106	4
		SUPPLIER CODE:	108120	
		V15653		
		SPECIFICATION NUMBER:		
		BACN10JN3		
		OPTIONAL PART:		
		BRFM20A3		
		V52828		
		MF1000-3BAC		
		V15653		
		NS103218-02		
		V80539		
		RMF9201M3		
		V72962		
		VN252A02		
		V92215		
		T8124S3S		
		V11815		
		ATTACHING PARTS		
- 165	BACR15BA3FAD	...RIVET-	101106	8
		SIZE DETERMINED ON INSTL.	108120	
		-------*-------		
170	VNS1924CA1-8	...STUD-	101106	1
		SUPPLIER CODE:	108120	
		V5M902		
		SPECIFICATION NUMBER:		
		BACS53B1EA1		
		OPTIONAL PART:		
		VNS1924CA3-1-8		
		V92215		
		POSITION DATA:		
		NS		
175	BACN10GH3A2	...NUTPLATE	101106	1
			108120	
		ATTACHING PARTS		
- 180	BACR15BB4AD	...RIVET-	101106	2
		SIZE DETERMINED ON INSTL.	108120	
		-------*-------		
- 500	286N1254-301	WIRE BUNDLE ASSY-	101102	1
			108120	
- 500	286N1254-701	WIRE BUNDLE ASSY	103106	1
505	BACC45FN16-10S6	.RECEPTACLE-	101102	1
		ELECTRICAL EQUIP NUMBER:	108120	
		D40416J		
		WIRING DIAGRAM REF:		
		245115		
		242511		

MISSING ITEM NUMBERS NOT APPLICABLE

- ITEM NOT ILLUSTRATED

BOEING PROPRIETARY - Copyright © - Unpublished Work - See title page for details.

FIG ITEM	PART NUMBER	1 2 3 4 5 6 7 NOMENCLATURE	EFFECT FROM TO	UNITS PER ASSY
2				
505	BACC45FN14-12S6	.RECEPTACLE- ELECTRICAL EQUIP NUMBER: D40416J WIRING DIAGRAM REF: 245115	103106	1
510	BACC45FN18-8S7	.RECEPTACLE- ELECTRICAL EQUIP NUMBER: D40418J WIRING DIAGRAM REF: 242512	101102 108120	1
515	BACC45FN22-12S8	.RECEPTACLE- ELECTRICAL EQUIP NUMBER: D40452J WIRING DIAGRAM REF: 245115	101106 108120	1
520	BACC45FN16-24S	.CONNECTOR- ELECTRICAL EQUIP NUMBER: D40450J WIRING DIAGRAM REF: 242512	101102 108120	1
520	BACC45FN20-28S	.CONNECTOR- ELECTRICAL EQUIP NUMBER: D40450J WIRING DIAGRAM REF: 242512	103106	1
525	BACC45FN16-24S6	.CONNECTOR- ELECTRICAL EQUIP NUMBER: D40270J WIRING DIAGRAM REF: 242513	101106 108120	1
530	BACC45FN14-15S	.CONNECTOR- ELECTRICAL EQUIP NUMBER: D41390J WIRING DIAGRAM REF: 242512	101106 108120	1
535	BACC45FN22-12S7	.RECEPTACLE- ELECTRICAL EQUIP NUMBER: D40460J WIRING DIAGRAM REF: 245125	101102 108120	1
535	BACC45FN22-32S7	.PLUG- ELECTRICAL EQUIP NUMBER: D40460J WIRING DIAGRAM REF: 245125	103106	1

MISSING ITEM NUMBERS NOT APPLICABLE

– ITEM NOT ILLUSTRATED

BOEING PROPRIETARY - Copyright © - Unpublished Work - See title page for details.

FIG ITEM	PART NUMBER	1 2 3 4 5 6 7 NOMENCLATURE	EFFECT FROM TO	UNITS PER ASSY
2				
- 540	YHLZ16-4	.MODULE-	101106	1
		SUPPLIER CODE:	108120	
		V09922		
		SPECIFICATION NUMBER:		
		BACM15C3B		
		OPTIONAL PART:		
		421120-452		
		V58982		
		TBH120452		
		V58982		
		ELECTRICAL EQUIP NUMBER:		
		TB0103Y		
		WIRING DIAGRAM REF:		
		242511		
- 550	286N2344-301	WIRE BUNDLE ASSY	101102	RF
			108120	
- 550	286N2344-701	WIRE BUNDLE ASSY	103106	RF
555	BACC45FT16B10P6	.PLUG-	101102	1
		ELECTRICAL EQUIP NUMBER:	108120	
		D40416P		
		WIRING DIAGRAM REF:		
		245115		
555	BACC45FT14B12P6	.PLUG-	103106	1
		ELECTRICAL EQUIP NUMBER:		
		D40416P		
		WIRING DIAGRAM REF:		
		245115		
560	BACC45FT22B12P8	.PLUG-	101106	1
		ELECTRICAL EQUIP NUMBER:	108120	
		D40452P		
		WIRING DIAGRAM REF:		
		245115		
- 600	286N2346-301	WIRE BUNDLE ASSY	101102	RF
			108120	
- 600	286N2346-701	WIRE BUNDLE ASSY	103106	RF
610	BACC45FT22B12P7	.PLUG-	101102	1
		ELECTRICAL EQUIP NUMBER:	108120	
		D40460P		
		WIRING DIAGRAM REF:		
		245125		
610	BACC45FT22B32P7	.PLUG-	103106	1
		ELECTRICAL EQUIP NUMBER:		
		D40460P		
		WIRING DIAGRAM REF:		
		245125		
- 650	286N2348-301	WIRE BUNDLE ASSY	101102	RF
			108120	
- 650	286N2348-701	WIRE BUNDLE ASSY	103106	RF

MISSING ITEM NUMBERS NOT APPLICABLE

- ITEM NOT ILLUSTRATED

BOEING PROPRIETARY - Copyright © - Unpublished Work - See title page for details.

FIG ITEM	PART NUMBER	1 2 3 4 5 6 7 NOMENCLATURE	EFFECT FROM TO	UNITS PER ASSY
2				
655	BACC45FT16B24P6	.PLUG-	101106	1
		ELECTRICAL EQUIP NUMBER:	108120	
		D40270P		
		WIRING DIAGRAM REF:		
		242513		
- 700	286N2394-301	WIRE BUNDLE ASSY-	101102	RF
			108120	
705	BACC45FT18B8P7	.PLUG-	101102	1
		ELECTRICAL EQUIP NUMBER:	108120	
		D40418P		
		WIRING DIAGRAM REF:		
		242512		
- 750	286N2396-301	WIRE BUNDLE ASSY-	101102	RF
			108120	
760	BACC45FT16B24P	.PLUG-	101102	1
		ELECTRICAL EQUIP NUMBER:	108120	
		D40450P		
		WIRING DIAGRAM REF:		
		242512		
- 800	286N2398-301	WIRE BUNDLE ASSY	101102	RF
			108120	
810	BACC45FT14B15P	.PLUG-	101102	1
		ELECTRICAL EQUIP NUMBER:	108120	
		D41390P		
		WIRING DIAGRAM REF:		
		242512		

MISSING ITEM NUMBERS NOT APPLICABLE

- ITEM NOT ILLUSTRATED

BOEING PROPRIETARY - Copyright © - Unpublished Work - See title page for details.

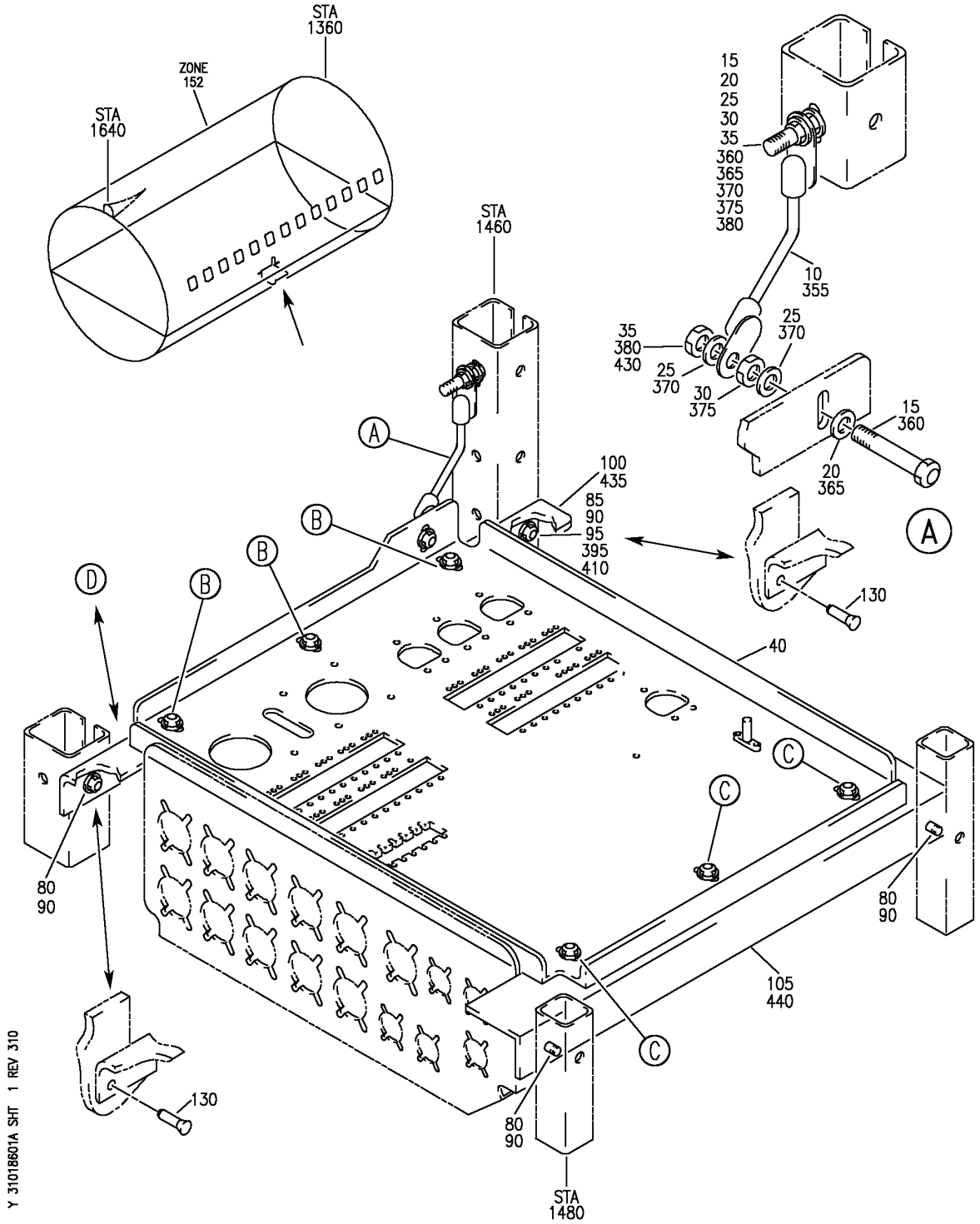

PANEL INSTL-E6 AFT EQPT CTR RELAY
FIGURE 1A (SHEET 1)

BOEING PROPRIETARY - Copyright © - Unpublished Work - See title page for details.

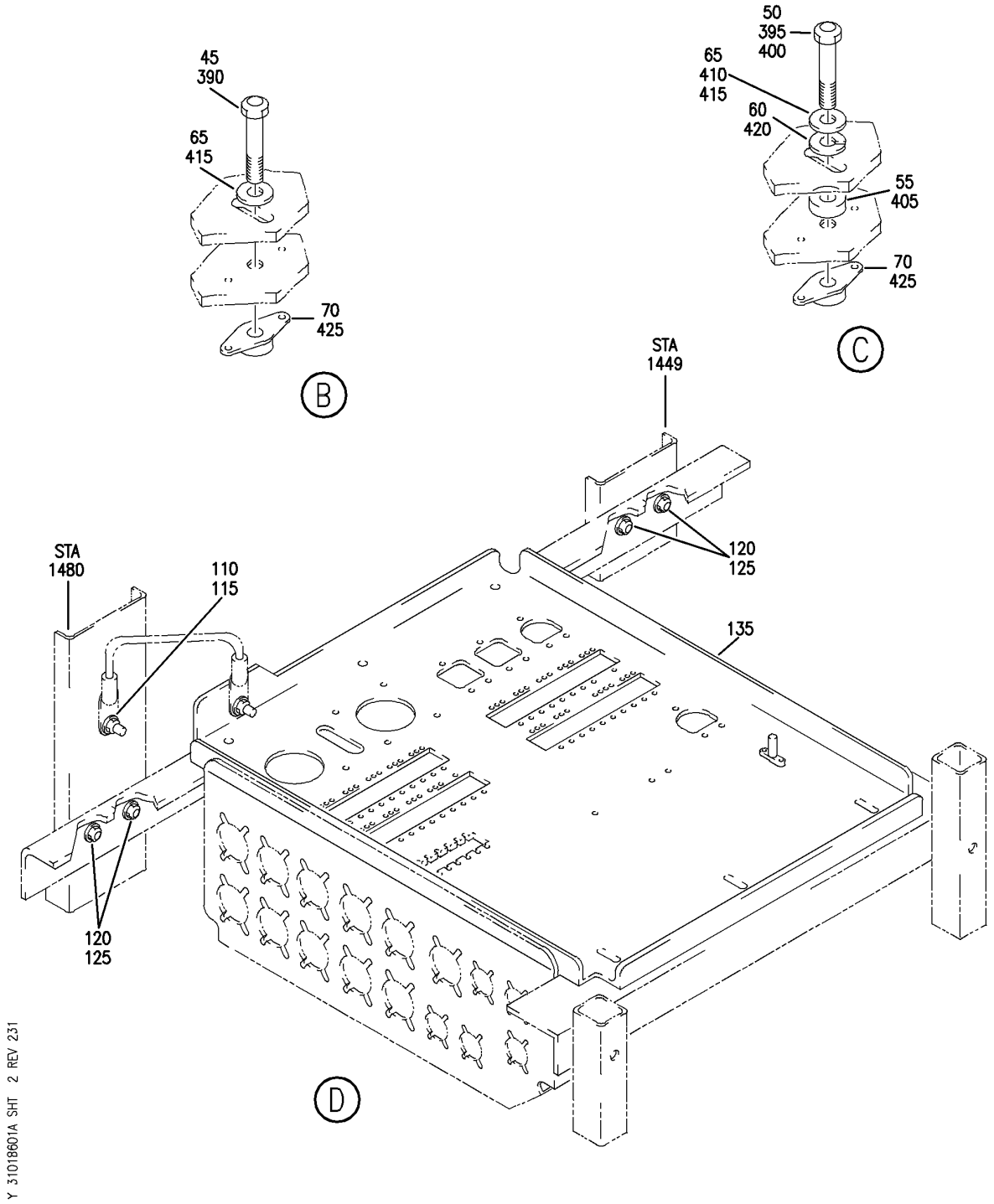

PANEL INSTL-E6 AFT EQPT CTR RELAY
FIGURE 1A (SHEET 2)

BOEING PROPRIETARY - Copyright © - Unpublished Work - See title page for details.

FIG ITEM	PART NUMBER	1 2 3 4 5 6 7 NOMENCLATURE	EFFECT FROM TO	UNITS PER ASSY
1A				
		PANEL INSTL-E6 AFT EQPT CTR RELAY	101102 108120 504903	1
10	740A20-4	.JUMPER ASSY SUPPLIER CODE: V91812 SPECIFICATION NUMBER: BACJ40A20-4 OPTIONAL PART: TJEJ40A20-4 V33483 RBEJ20-4 V1GK47 ATTACHING PARTS	101102 108120 504903	1
15	NAS1801-3-10	.SCREW	101102 108120 504903	2
20	MS35338-43	.WASHER	101102 108120 504903	2
25	NAS1149D0316J	.WASHER	101102 108120 504903	4
30	MS35650-305T	.NUT	101102 108120 504903	2
35	PLH53CD	.NUT SUPPLIER CODE: VF0224 SPECIFICATION NUMBER: BACN10YR3CD OPTIONAL PART: H52732-3CD V15653	101102 108120 504903	2
45	NAS6603-2	.BOLT	101102 108120 504903	3
50	NAS6603-3	.BOLT	101102 108120 504903	3
55	NAS43DD3-5FC	.SPACER	101102 108120 504903	3
60	BACW10P136AL	.WASHER	101102 108120 504903	3

MISSING ITEM NUMBERS NOT APPLICABLE

— ITEM NOT ILLUSTRATED

BOEING PROPRIETARY - Copyright © - Unpublished Work - See title page for details.

FIG ITEM	PART NUMBER	1 2 3 4 5 6 7 NOMENCLATURE	EFFECT FROM TO	UNITS PER ASSY
1A				
65	NAS1149D0332J	.WASHER	101102 108120 504903	6
		-------*-------		
70	MF53049-3	.NUTPLATE SUPPLIER CODE: V15653 SPECIFICATION NUMBER: BACN10JN3 OPTIONAL PART: BRFM20A3 V52828 MF1000-3BAC V15653 NS103218-02 V80539 RMF9201M3 V72962 VN252A02 V92215 T8124S3S V11815 ATTACHING PARTS	101102 108120 504903	6
- 75	BACR15BA3AD	.RIVET- SIZE DETERMINED ON INSTL.	101102 108120 504903	12
		-------*-------		
80	NAS6603-2	.BOLT	101102 108120 504903	3
85	NAS6603-3	.BOLT	101102 108120 504903	1
90	NAS1149D0363J	.WASHER	101102 108120 504903	4
95	MS21042L3	.NUT	101102 108120 504903	1
100	284N1569-2	.BRACKET	101102 108120 504903	1
105	284N1569-8	.BRACKET	101102 108120 504903	1

MISSING ITEM NUMBERS NOT APPLICABLE

- ITEM NOT ILLUSTRATED

BOEING PROPRIETARY - Copyright © - Unpublished Work - See title page for details.

FIG ITEM	PART NUMBER	1 2 3 4 5 6 7 NOMENCLATURE	EFFECT FROM TO	UNITS PER ASSY
1A				
- 350	284N1576-100	PANEL INSTL-E6 EQPT CTR RELAY POSITION DATA: AFT FOR NHA SEE: 24-00-58-05D	101101	RF
- 350	284N1576-101	PANEL INSTL-E6 EQPT CTR RELAY POSITION DATA: AFT FOR NHA SEE: 24-00-58-05D	102102 108120 504903	RF
355	740A20-4	.JUMPER ASSY SUPPLIER CODE: V91812 SPECIFICATION NUMBER: BACJ40A20-4 OPTIONAL PART: TJEJ40A20-4 V33483 RBEJ20-4 V1GK47	101102 108120 504903	1
360	NAS1801-3-10	.SCREW ATTACHING PARTS	101102 108120 504903	2
365	MS35338-43	.WASHER	101102 108120 504903	2
370	NAS1149D0316J	.WASHER	101102 108120 504903	4
375	MS35650-305T	.NUT	101102 108120 504903	2
380	PLH53CD	.NUT SUPPLIER CODE: VF0224 SPECIFICATION NUMBER: BACN10YR3CD OPTIONAL PART: H52732-3CD V15653 -------*-------	101102 108120 504903	2
385	NAS6603-2	.BOLT	101101	6
390	NAS6603-2	.BOLT	102102 108120 504903	3
395	NAS6603-3	.BOLT	101101	4

MISSING ITEM NUMBERS NOT APPLICABLE

- ITEM NOT ILLUSTRATED

BOEING PROPRIETARY - Copyright © - Unpublished Work - See title page for details.

FIG ITEM	PART NUMBER	1 2 3 4 5 6 7 NOMENCLATURE	EFFECT FROM TO	UNITS PER ASSY
1A				
400	NAS6603-3	.BOLT	102102 108120 504903	3
405	NAS43DD3-5FC	.SPACER	101101	3
410	NAS1149D0363J	.WASHER	101101	4
415	NAS1149D0332J	.WASHER	101102 108120 504903	6
420	BACW10P136AL	.WASHER	101102 108120 504903	3
425	MF53049-3	.NUTPLATE SUPPLIER CODE: V15653 SPECIFICATION NUMBER: BACN10JN3 OPTIONAL PART: BRFM20A3 V52828 MF1000-3BAC V15653 NS103218-02 V80539 RMF9201M3 V72962 VN252A02 V92215 T8124S3S V11815	101101	6
430	PLH53CD	.NUT SUPPLIER CODE: VF0224 SPECIFICATION NUMBER: BACN10YR3CD OPTIONAL PART: H52732-3CD V15653	101101	1
435	284N1569-2	.BRACKET	101101	1
440	284N1569-8	.BRACKET	101101	1

MISSING ITEM NUMBERS NOT APPLICABLE

– ITEM NOT ILLUSTRATED

BOEING PROPRIETARY - Copyright © - Unpublished Work - See title page for details.

NON-ILLUSTRATED FIGURE

THE ITEMS REFLECTED IN THIS FIGURE ARE INTENTIONALLY NON-ILLUSTRATED. THEY ARE REFERENCED TO EITHER A NEXT HIGHER OR NEXT LOWER ASSEMBLY/INSTALLATION FIGURE.

Y 31018602 REV 312

BOEING PROPRIETARY - Copyright © - Unpublished Work - See title page for details.

FIG ITEM	PART NUMBER	1 2 3 4 5 6 7 NOMENCLATURE	EFFECT FROM TO	UNITS PER ASSY
2				
		EQUIPMENT INSTL-E6 AFT EQPT CTR RELAY PANEL	101102 504903	
- 1	284N1554-105	EQUIPMENT INSTL-E6 EQPT CTR RELAY PANEL POSITION DATA: AFT FOR NHA SEE: 24-00-58-05D	101102	RF
- 1	284N1554-108	EQUIPMENT INSTL-E6 EQPT CTR RELAY PANEL POSITION DATA: AFT FOR NHA SEE: 24-00-58-05D	504903	RF
- 10	284N1554-1000	.EQUIPMENT ASSY-OPTION PKG MISCELLANEOUS DATA: MINOR MODEL 757-200 PASS FUNCTIONAL REFERENCE: ELECTRICAL POWER FOR DETAILS SEE 24-31-04-01A EQUIPMENT/FURNISHINGS FOR DETAILS SEE 25-71-51-06A FUEL FOR DETAILS SEE 28-25-02-01A LIGHTS FOR DETAILS SEE 33-37-51-07A AIRBORNE AUXILIARY POWER FOR DETAILS SEE 49-15-05-02A 49-31-01-02A 49-41-71-03A 49-61-71-03A DOORS FOR DETAILS SEE 52-34-05-01A	101102 504903	1

MISSING ITEM NUMBERS NOT APPLICABLE

- ITEM NOT ILLUSTRATED

BOEING PROPRIETARY - Copyright © - Unpublished Work - See title page for details.

FIG ITEM	PART NUMBER	1 2 3 4 5 6 7 NOMENCLATURE	EFFECT FROM TO	UNITS PER ASSY
2				
- 15	284N1554-1005	.EQUIPMENT ASSY-OPTION PKG MISCELLANEOUS DATA: MINOR MODEL 757-200 PASS AND APU ADDITIONAL START OR MINOR MODEL 757-300 PASS AND APU ADDITIONAL START FUNCTIONAL REFERENCE: ELECTRICAL POWER FOR DETAILS SEE 24-32-05-01A 24-32-06-01A AIRBORNE AUXILIARY POWER FOR DETAILS SEE 49-41-71-03A	101102 504903	1
- 20	284N1554-1006	.EQUIPMENT ASSY-OPTION PKG MISCELLANEOUS DATA: MINOR MODEL 757-200 PASS AND STANDBY POWER-90 MINUTES OR MINOR MODEL 757-200 PASS AND STANDBY POWER-EXTENDED TIME CAPABILITY OR MINOR MODEL 757-300 PASS AND STANDBY POWER-90 MINUTES FOR DETAILS SEE: 24-31-04-01A	101102 504903	1
- 30	284N1554-1008	.EQUIPMENT ASSY-OPTION PKG MISCELLANEOUS DATA: ACE CARGO LOADER, AFT FOR DETAILS SEE: 25-51-51-02A	504903	1
- 40	284N1554-1011	.EQUIPMENT ASSY-OPTION PKG MISCELLANEOUS DATA: MINOR MODEL 757-200 PASS AND STANDBY POWER-90 MINUTES OR MINOR MODEL 757-200 PASS AND STANDBY POWER-EXTENDED TIME CAPABILITY OR MINOR MODEL 757-300 PASS AND STANDBY POWER-90 MINUTES FOR DETAILS SEE: 24-33-51-03A	101102 504903	1

MISSING ITEM NUMBERS NOT APPLICABLE

- ITEM NOT ILLUSTRATED

BOEING PROPRIETARY - Copyright © - Unpublished Work - See title page for details.

FIG ITEM	PART NUMBER	1 2 3 4 5 6 7 NOMENCLATURE	EFFECT FROM TO	UNITS PER ASSY
2				
- 50	284N1554-1013	.EQUIPMENT ASSY-OPTION PKG MISCELLANEOUS DATA: MINOR MODEL 757-200 PASS AND NO EXTENDED E6 RACK FOR DETAILS SEE: 25-71-51-06A	101102 504903	1
- 65	284N1554-1016	.EQUIPMENT ASSY-OPTION PKG MISCELLANEOUS DATA: BAGGAGE HANDLING SYSTEM, AFT SBC LOADING SYSTEM FOR DETAILS SEE: 25-51-51-02A	504903	1

MISSING ITEM NUMBERS NOT APPLICABLE

- ITEM NOT ILLUSTRATED

BOEING PROPRIETARY - Copyright © - Unpublished Work - See title page for details.

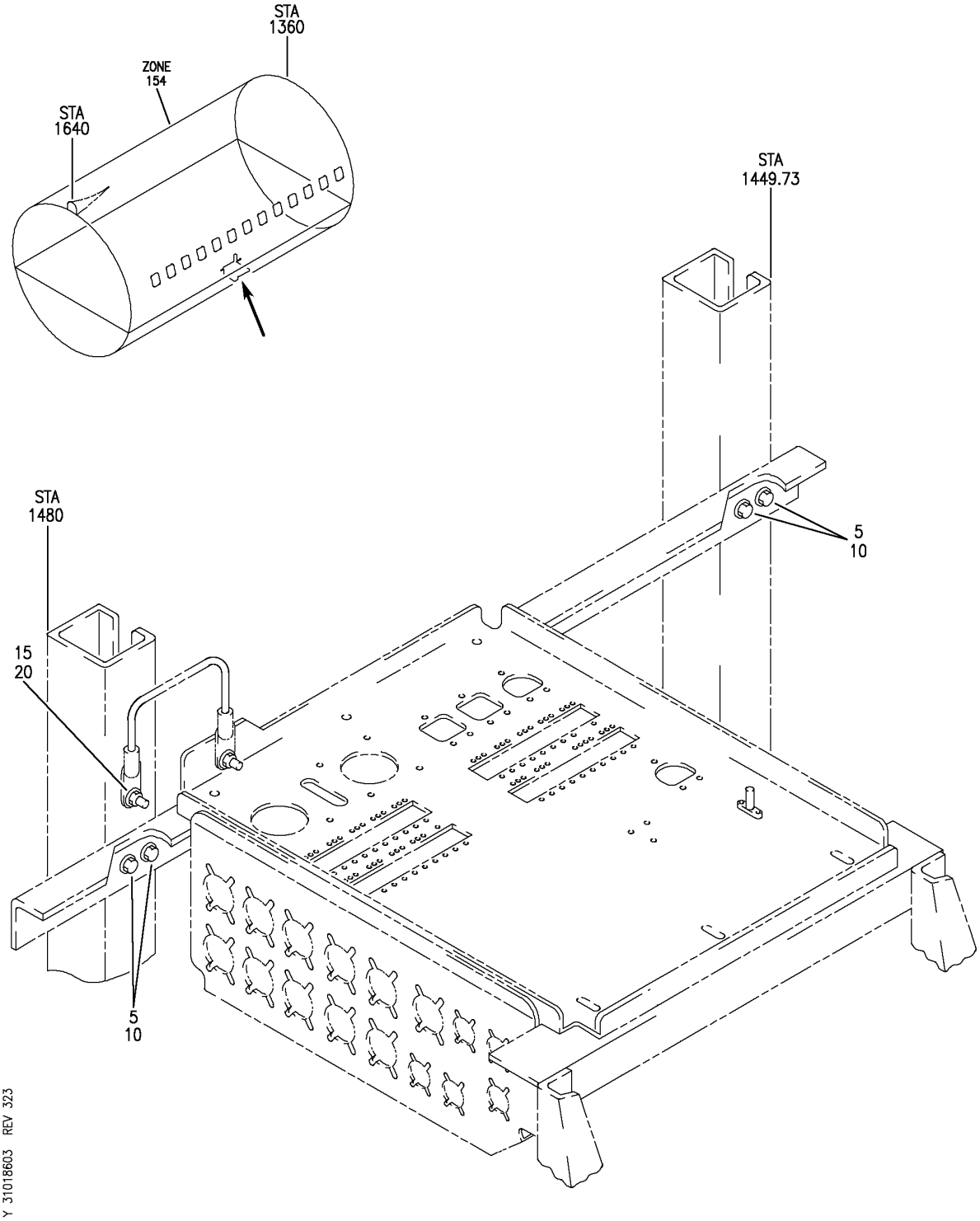

PANEL AND EQUIPMENT INSTL RELAY PANEL/ EQPT CTR AFT
FIGURE 3 (SHEET 1)

BOEING PROPRIETARY - Copyright © - Unpublished Work - See title page for details.

FIG ITEM	PART NUMBER	1 2 3 4 5 6 7 NOMENCLATURE	EFFECT FROM TO	UNITS PER ASSY
3				
		PANEL AND EQUIPMENT INSTL	103106	
		RELAY PANEL/ EQPT CTR		
		AFT		
- 1	MODREF9013	PANEL INSTL-E6	103106	1
		EQPT CTR		
		MODULE NUMBER:		
		284N1576-300 REV A		
		POSITION DATA:		
		AFT		
5	BACB30NM3K4	.BOLT	103106	4
10	BACW10BN3AC	.WASHER	103106	4
15	NAS1149D0316H	.WASHER	103106	1
20	PLH53CD	.NUT	103106	1
		SUPPLIER CODE:		
		VF0224		
		SPECIFICATION NUMBER:		
		BACN10YR3CD		
		OPTIONAL PART:		
		H52732-3CD		
		V15653		

MISSING ITEM NUMBERS NOT APPLICABLE

- ITEM NOT ILLUSTRATED

BOEING PROPRIETARY - Copyright © - Unpublished Work - See title page for details.

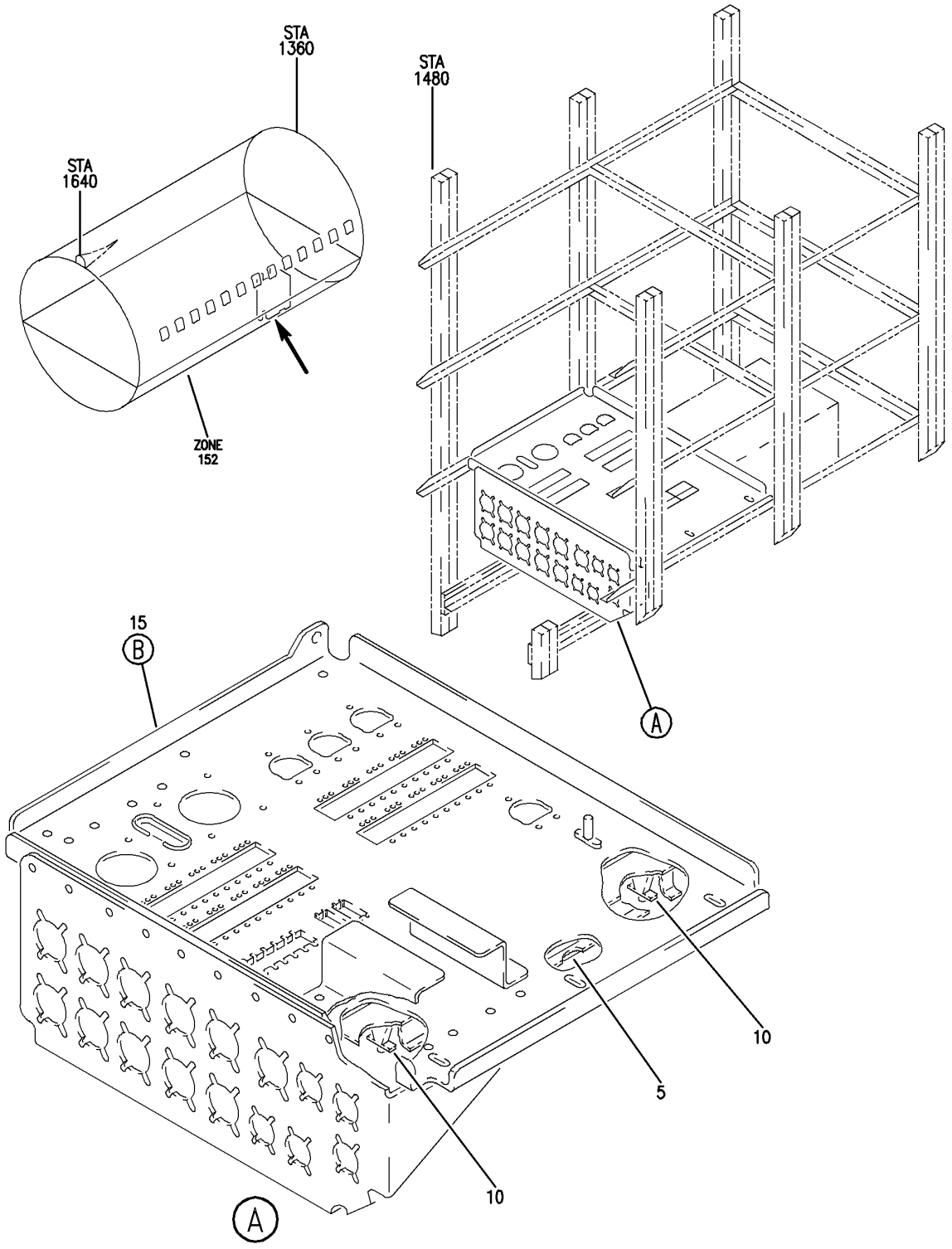

EQUIPMENT ASSY-E6 RELAY PNL AFT EQPT CTR (ELECTRICAL/ELECTRONIC PANELS ONLY)
FIGURE 4 (SHEET 1)

BOEING PROPRIETARY - Copyright © - Unpublished Work - See title page for details.

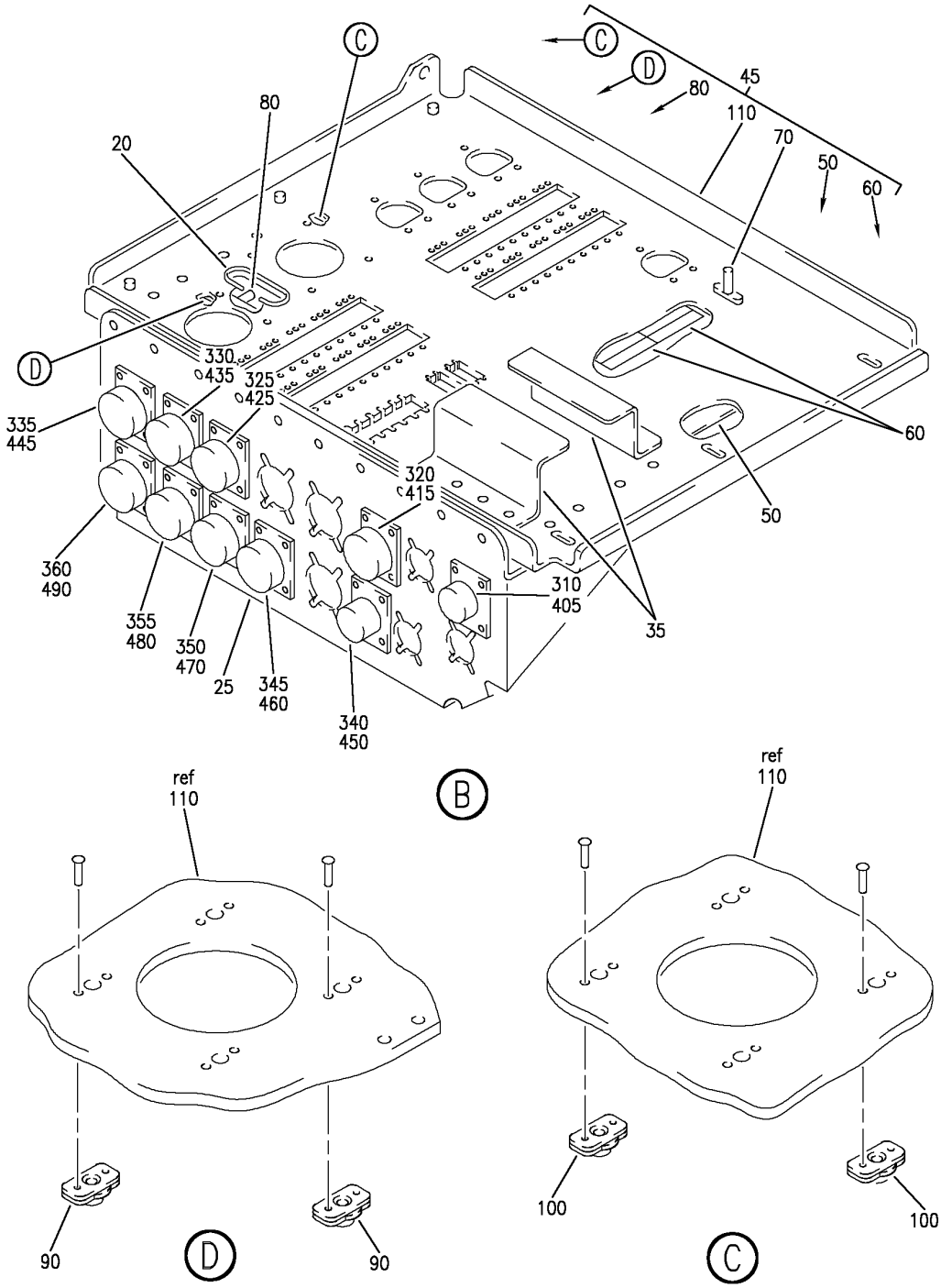

EQUIPMENT ASSY-E6 RELAY PNL AFT EQPT CTR (ELECTRICAL/ELECTRONIC PANELS ONLY)
FIGURE 4 (SHEET 2)

BOEING PROPRIETARY - Copyright © - Unpublished Work - See title page for details.

FIG ITEM	PART NUMBER	1 2 3 4 5 6 7 NOMENCLATURE	EFFECT FROM TO	UNITS PER ASSY
4				
		EQUIPMENT ASSY-E6 RELAY	108120	
		PNL AFT EQPT CTR		
		(ELECTRICAL/ELECTRONIC		
		PANELS ONLY)		
- 1	284N1554-123	EQUIPMENT ASSY-E6 RELAY	108120	RF
		PNL EQPT CTR		
		(ELECTRICAL/ELECTRONIC		
		PANELS ONLY)		
		POSITION DATA:		
		AFT		
		FOR NHA/OTHER SYS DET SEE:		
		24-00-58-05D		
5	BAC27EEL25570	.MARKER	108120	1
10	H49-2	.CLAMP	108120	2
		SUPPLIER CODE:		
		V34941		
		SPECIFICATION NUMBER:		
		BACC49A2		
		OPTIONAL PART:		
		MF104-2		
		V6E102		
15	284N1555-16	.PANEL ASSY	108120	1
20	BACG20ZB000500	..GROMMET	108120	1
25	284N1555-10	..BRACKET-DISC.	108120	1
		ATTACHING PARTS		
- 30	BACR15BB5ADC	..RIVET-	108120	18
		SIZE DETERMINED ON INSTL.		
		-------*-------		
35	284N1720-4	..BRACKET-CONTACTOR	108108	2
		PRE SERVICE BULLETIN:		
		49-0019		
		ATTACHING PARTS		
- 40	BACR15BB5ADC	..RIVET-	108108	6
		SIZE DETERMINED ON INSTL.		
		-------*-------		
45	284N1555-17	..PANEL ASSY	108120	1
50	AMY1400T1	...TRACK	108120	1
		SUPPLIER CODE:		
		V09922		
		SPECIFICATION NUMBER:		
		BACT44A1400U		
		ATTACHING PARTS		
- 55	BACR15BB5ADC	...RIVET-	108120	4
		SIZE DETERMINED ON INSTL.		
		-------*-------		
60	YHLZG16-1	...BLOCK-	108120	2
		SUPPLIER CODE:		
		V09922		

MISSING ITEM NUMBERS NOT APPLICABLE

- ITEM NOT ILLUSTRATED

BOEING PROPRIETARY - Copyright © - Unpublished Work - See title page for details.

FIG ITEM	PART NUMBER	1 2 3 4 5 6 7 NOMENCLATURE	EFFECT FROM TO	UNITS PER ASSY
4				
		ATTACHING PARTS		
- 65	BACR15BB5ADC	...RIVET-	108120	4
		SIZE DETERMINED ON INSTL.		
		-------*-------		
70	WS14A10	...NUTPLATE	108120	1
		SUPPLIER CODE:		
		V04169		
		SPECIFICATION NUMBER:		
		BACN10TL3A10		
		ATTACHING PARTS		
- 75	BACR15BB4ADC	...RIVET-	108120	2
		SIZE DETERMINED ON INSTL.		
		-------*-------		
80	T8059S1032B3	...NUTPLATE	108120	1
		SUPPLIER CODE:		
		V52828		
		SPECIFICATION NUMBER:		
		BACN10MK3-85		
		OPTIONAL PART:		
		RM52LHA71-8-02		
		V72962		
		ATTACHING PARTS		
- 85	BACR15BB4ADC	...RIVET-	108120	2
		SIZE DETERMINED ON INSTL.		
		-------*-------		
90	MF53050-06CD	...NUTPLATE	108120	4
		SUPPLIER CODE:		
		V15653		
		SPECIFICATION NUMBER:		
		BACN10JN06CD		
		OPTIONAL PART:		
		T8301C632CD		
		V11815		
		102F9201M62		
		V72962		
		NS202487-62		
		V80539		
		MF51637-06		
		V15653		
		BRFM20C06LD		
		V52828		
		ATTACHING PARTS		
- 95	BACR15BA3ADC	...RIVET-	108120	8
		SIZE DETERMINED ON INSTL.		
		-------*-------		

MISSING ITEM NUMBERS NOT APPLICABLE

- ITEM NOT ILLUSTRATED

BOEING PROPRIETARY - Copyright © - Unpublished Work - See title page for details.

FIG ITEM	PART NUMBER	1 2 3 4 5 6 7 NOMENCLATURE	EFFECT FROM TO	UNITS PER ASSY
4				
100	MF53050-3CD	...NUTPLATE SUPPLIER CODE: V15653 SPECIFICATION NUMBER: BACN10JN3CD OPTIONAL PART: BRFM20C3D V52828 102F9201M3 V72962 NS202487-02 V80539 MF51637-3 V15653 ATTACHING PARTS	108120	4
- 105	BACR15BA3ADC	...RIVET- SIZE DETERMINED ON INSTL. -------*-------	108120	8
110	284N1555-18	...PANEL	108120	1
- 300	286N1024-306	WIRE BUNDLE ASSY	108120	RF
310	BACC45FN14-12P	.CONNECTOR- POSITION DATA: POS 1 ELECTRICAL EQUIP NUMBER: D42238J WIRING DIAGRAM REF: 496111	108120	1
320	BACC45FN22-55S7	.RECEPTACLE- POSITION DATA: POS 3 ELECTRICAL EQUIP NUMBER: D41680J WIRING DIAGRAM REF: 496111	108120	1
325	BACC45FN18-14P	.CONNECTOR- POSITION DATA: POS 6 ELECTRICAL EQUIP NUMBER: D40170J WIRING DIAGRAM REF: 243141	108120	1
330	BACC45FN10-5P6	.CONNECTOR- POSITION DATA: POS 7 ELECTRICAL EQUIP NUMBER: D41062J WIRING DIAGRAM REF: 282521	108120	1

MISSING ITEM NUMBERS NOT APPLICABLE

- ITEM NOT ILLUSTRATED

BOEING PROPRIETARY - Copyright © - Unpublished Work - See title page for details.

FIG ITEM	PART NUMBER	1 2 3 4 5 6 7 NOMENCLATURE	EFFECT FROM TO	UNITS PER ASSY
4				
335	BACC45FN22-32P7	.RECEPTACLE- POSITION DATA: POS 8 ELECTRICAL EQUIP NUMBER: D42050J WIRING DIAGRAM REF: 496111	108120	1
345	BACC45FN20-25S6	.RECEPTACLE- POSITION DATA: POS 13 ELECTRICAL EQUIP NUMBER: D41688J WIRING DIAGRAM REF: 496114	108120	1
350	BACC45FN20-25S7	.RECEPTACLE- POSITION DATA: POS 14 ELECTRICAL EQUIP NUMBER: D41932J WIRING DIAGRAM REF: 523511	108120	1
355	BACC45FN12-12S8	.CONNECTOR- POSITION DATA: POS 15 ELECTRICAL EQUIP NUMBER: D41770J WIRING DIAGRAM REF: 282511	108120	1
360	BACC45FN20-25P9	.RECEPTACLE- POSITION DATA: POS 16 ELECTRICAL EQUIP NUMBER: D42038J WIRING DIAGRAM REF: 255121	108120	1
- 400	286N2358-335	WIRE BUNDLE ASSY	108120	RF
405	BACC45FT14-12S	.PLUG- ELECTRICAL EQUIP NUMBER: D42238P WIRING DIAGRAM REF: 282511	108120	1
- 410	286N2650-323	WIRE BUNDLE ASSY	108120	RF
415	BACC45FT22-55P7	.PLUG- ELECTRICAL EQUIP NUMBER: D41680P WIRING DIAGRAM REF: 496111	108120	1
- 420	286N2700-301	WIRE BUNDLE ASSY	108120	RF

MISSING ITEM NUMBERS NOT APPLICABLE

- ITEM NOT ILLUSTRATED

BOEING PROPRIETARY - Copyright © - Unpublished Work - See title page for details.

FIG ITEM	PART NUMBER	1 2 3 4 5 6 7 NOMENCLATURE	EFFECT FROM TO	UNITS PER ASSY
4				
425	BACC45FT18-14S	.PLUG-	108120	1
		ELECTRICAL EQUIP NUMBER:		
		D40170P		
		WIRING DIAGRAM REF:		
		243141		
- 430	286N2626-302	WIRE BUNDLE ASSY	108120	RF
435	BACC45FT10-5S6	.CONNECTOR-	108120	1
		ELECTRICAL EQUIP NUMBER:		
		D41062P		
		WIRING DIAGRAM REF:		
		261811		
- 440	286N0126-336	WIRE BUNDLE ASSY	108120	RF
445	BACC45FT22A32S7	.CONNECTOR-	108120	1
		ELECTRICAL EQUIP NUMBER:		
		D42050P		
		WIRING DIAGRAM REF:		
		496111		
- 455	286N2654-325	WIRE BUNDLE ASSY	108120	RF
460	BACC45FT20-25P6	.CONNECTOR-	108120	1
		ELECTRICAL EQUIP NUMBER:		
		D41688P		
		WIRING DIAGRAM REF:		
		496114		
- 465	286N2662-304	WIRE BUNDLE ASSY	108120	RF
470	BACC45FT20-25P7	.PLUG-	108120	1
		ELECTRICAL EQUIP NUMBER:		
		D41932P		
		WIRING DIAGRAM REF:		
		523511		
- 475	286N2658-302	WIRE BUNDLE ASSY	108120	RF
480	BACC45FT12-12P8	.PLUG-	108120	1
		ELECTRICAL EQUIP NUMBER:		
		D41770P		
		WIRING DIAGRAM REF:		
		282521		
- 485	286N2632-343	WIRE BUNDLE ASSY	108120	RF
490	BACC45FT20-25S9	.CONNECTOR-	108120	1
		ELECTRICAL EQUIP NUMBER:		
		D42038P		
		WIRING DIAGRAM REF:		
		255121		

MISSING ITEM NUMBERS NOT APPLICABLE

- ITEM NOT ILLUSTRATED

BOEING PROPRIETARY - Copyright © - Unpublished Work - See title page for details.

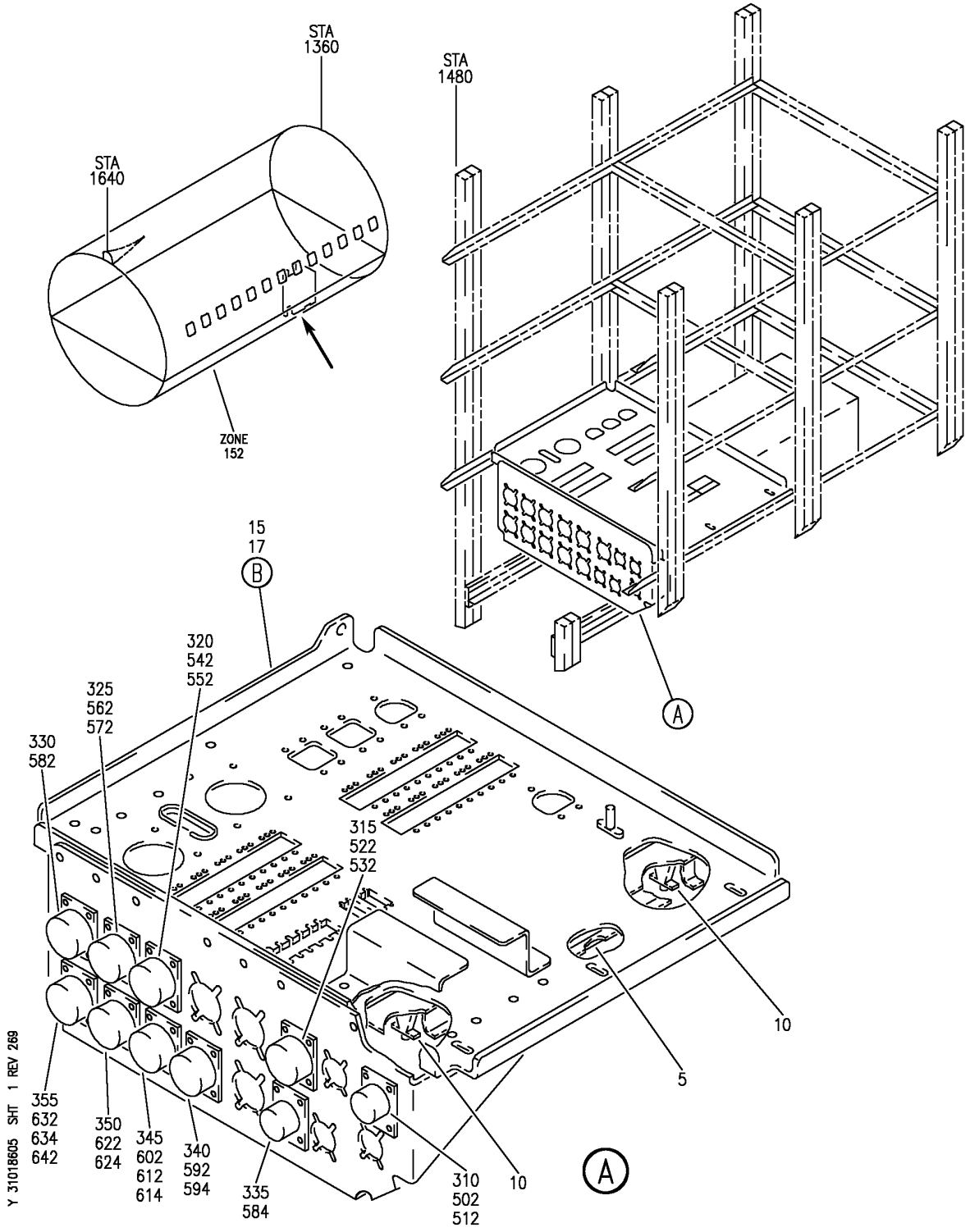

EQUIPMENT ASSY-E6 RELAY PNL AFT EQPT CTR (ELECTRICAL/ELECTRONIC PANELS ONLY)
FIGURE 5 (SHEET 1)

BOEING PROPRIETARY - Copyright © - Unpublished Work - See title page for details.

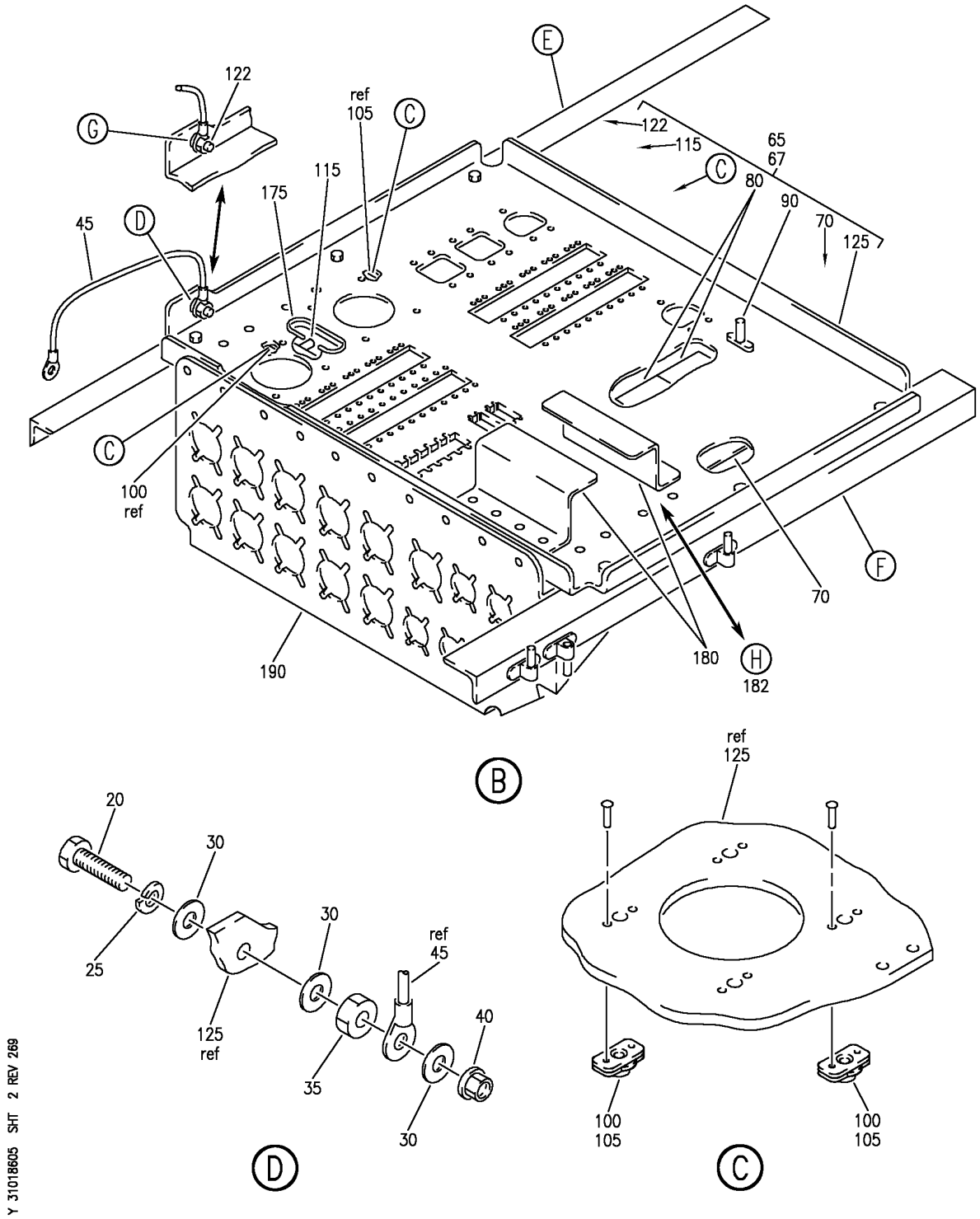

EQUIPMENT ASSY-E6 RELAY PNL AFT EQPT CTR (ELECTRICAL/ELECTRONIC PANELS ONLY)
FIGURE 5 (SHEET 2)

BOEING PROPRIETARY - Copyright © - Unpublished Work - See title page for details.

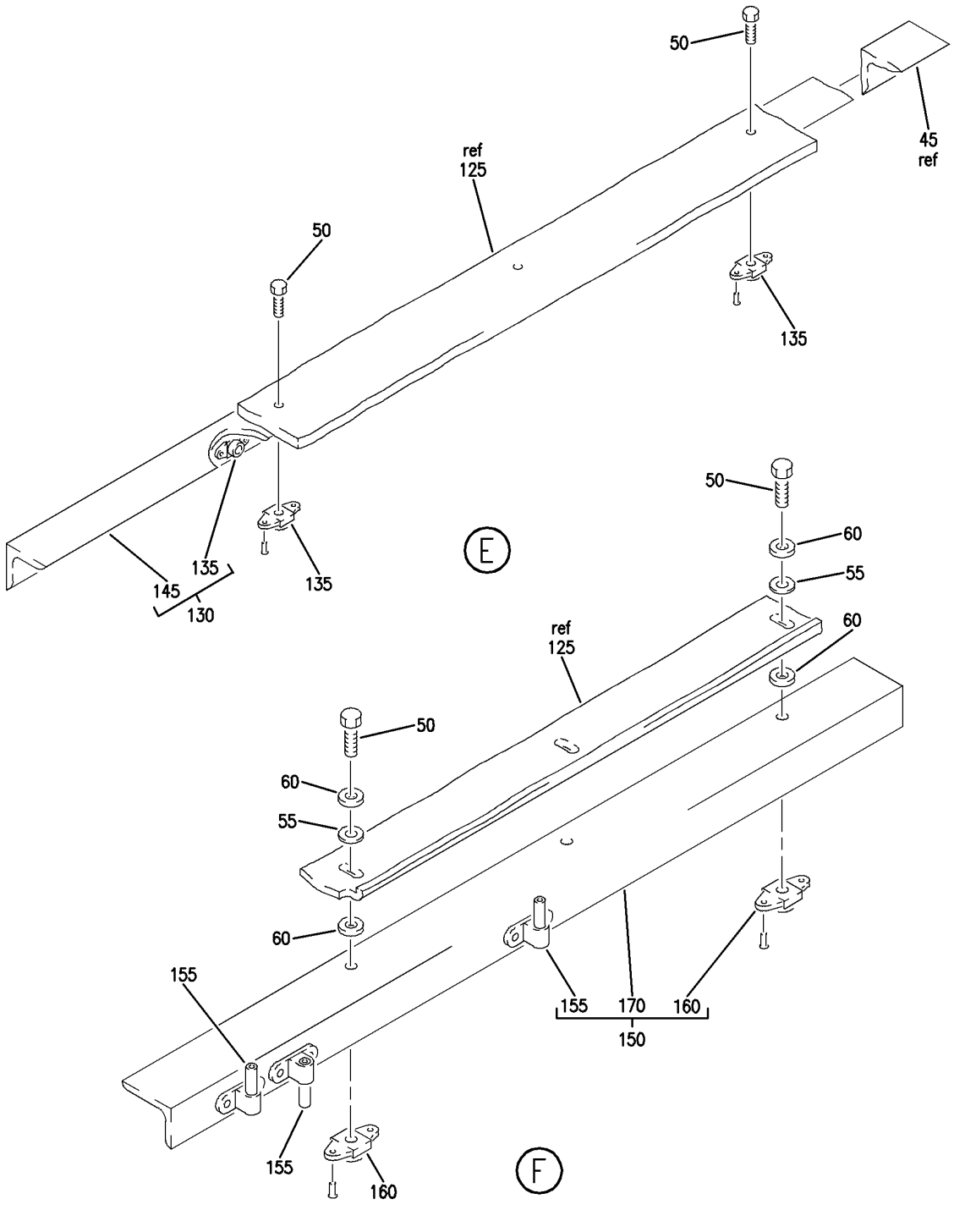

EQUIPMENT ASSY-E6 RELAY PNL AFT EQPT CTR (ELECTRICAL/ELECTRONIC PANELS ONLY)
FIGURE 5 (SHEET 3)

BOEING PROPRIETARY - Copyright © - Unpublished Work - See title page for details.

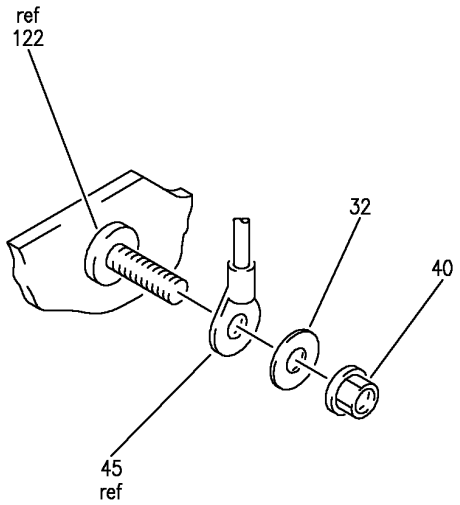

G

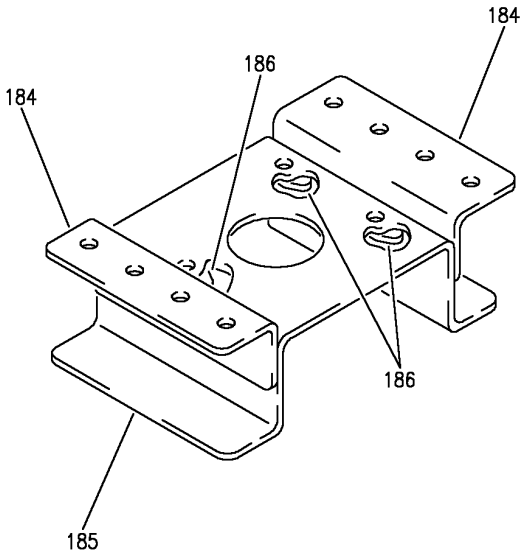

H

Y 31018605 SHT 4 REV 269

EQUIPMENT ASSY-E6 RELAY PNL AFT EQPT CTR (ELECTRICAL/ELECTRONIC PANELS ONLY)
FIGURE 5 (SHEET 4)

BOEING PROPRIETARY - Copyright © - Unpublished Work - See title page for details.

FIG ITEM	PART NUMBER	1 2 3 4 5 6 7 NOMENCLATURE	EFFECT FROM TO	UNITS PER ASSY
5				
		EQUIPMENT ASSY-E6 RELAY PNL AFT EQPT CTR (ELECTRICAL/ELECTRONIC PANELS ONLY)	103106	
- 1	MODREF11091	EQUIPMENT ASSY-E6 RELAY PNL AFT EQPT CTR (ELECTRICAL/ELECTRONIC PANELS ONLY)	103106	1
		MODULE NUMBER: 284N1554-308 REV A		
		FOR OTHER SYS DETAILS SEE: 24-31-71-06		
		24-31-71-07		
		24-32-05-03		
		24-32-06-03		
		24-32-71-06		
		28-25-71-07		
		33-37-71-02		
		49-31-71-02		
		49-41-71-05		
		49-61-71-05		
		52-34-71-02		
5	BAC27EEL25570	.MARKER- PLACARD CONTENT: 1 THRU 52	103106	1
10	H49-2	.CLAMP SUPPLIER CODE: V34941	103106	2
		SPECIFICATION NUMBER: BACC49A2		
		OPTIONAL PART: MF104-2		
		V6E102		
15	284N1555-20	.PANEL ASSY-	103106	1
20	NAS1801-3-10	..SCREW	103106	1
25	MS35338-43	..WASHER	103106	1
30	NAS1149D0316J	..WASHER	103106	3
35	MS35650-305T	..NUT	103106	1
40	PLH53CD	..NUT SUPPLIER CODE: VF0224	103106	1
		SPECIFICATION NUMBER: BACN10YR3CD		
		OPTIONAL PART: H52732-3CD		
		V15653		
45	BACJ40A20-8	..JUMPER ASSY	103106	1
50	BACB30NM3K3	..BOLT	103106	6
55	NAS43DD3-5FC	..SPACER	103106	3

MISSING ITEM NUMBERS NOT APPLICABLE

- ITEM NOT ILLUSTRATED

BOEING PROPRIETARY - Copyright © - Unpublished Work - See title page for details.

FIG ITEM	PART NUMBER	1 2 3 4 5 6 7 NOMENCLATURE	EFFECT FROM TO	UNITS PER ASSY
5				
60	BACW10P136AL	..WASHER	103106	6
65	284N1555-12	..PANEL ASSY	103106	1
70	AMY1400T1	...TRACK	103106	1
		SUPPLIER CODE:		
		V09922		
		SPECIFICATION NUMBER:		
		BACT44A1400U		
		ATTACHING PARTS		
- 75	BACR15BB5ADC	...RIVET-	103106	4
		SIZE DETERMINED ON INSTL.		
		-------*-------		
80	YHLZG16-1	...BLOCK-GND	103106	2
		SUPPLIER CODE:		
		V09922		
		ATTACHING PARTS		
- 85	BACR15BB5ADC	...RIVET-	103106	8
		SIZE DETERMINED ON INSTL.		
		-------*-------		
90	WS14A10	...NUTPLATE	103106	1
		SUPPLIER CODE:		
		V04169		
		SPECIFICATION NUMBER:		
		BACN10TL3A10		
		ATTACHING PARTS		
- 95	BACR15BB4ADC	...RIVET-	103106	2
		SIZE DETERMINED ON INSTL.		
		-------*-------		
100	MF53050-06CD	...NUTPLATE	103106	4
		SUPPLIER CODE:		
		V15653		
		SPECIFICATION NUMBER:		
		BACN10JN06CD		
		OPTIONAL PART:		
		T8301C632CD		
		V11815		
		102F9201M62		
		V72962		
		NS202487-62		
		V80539		
		MF51637-06		
		V15653		
		BRFM20C06LD		
		V52828		

MISSING ITEM NUMBERS NOT APPLICABLE

- ITEM NOT ILLUSTRATED

BOEING PROPRIETARY - Copyright © - Unpublished Work - See title page for details.

FIG ITEM	PART NUMBER	1 2 3 4 5 6 7 NOMENCLATURE	EFFECT FROM TO	UNITS PER ASSY
5				
105	MF53050-3CD	...NUTPLATE	103106	4
		SUPPLIER CODE:		
		V15653		
		SPECIFICATION NUMBER:		
		BACN10JN3CD		
		OPTIONAL PART:		
		BRFM20C3D		
		V52828		
		102F9201M3		
		V72962		
		NS202487-02		
		V80539		
		MF51637-3		
		V15653		
		ATTACHING PARTS		
- 110	BACR15BA3ADC	...RIVET	103106	16
		-------*-------		
115	T8059S1032B3	...NUTPLATE	103106	1
		SUPPLIER CODE:		
		V52828		
		SPECIFICATION NUMBER:		
		BACN10MK3-85		
		OPTIONAL PART:		
		RM52LHA71-8-02		
		V72962		
		ATTACHING PARTS		
- 120	BACR15BB4ADC	...RIVET-	103106	2
		SIZE DETERMINED ON INSTL.		
		-------*-------		
125	284N1555-13	...PANEL	103106	1
130	284N1569-16	..ANGLE ASSY	103106	1
135	BRF200C3D	...NUTPLATE	103106	4
		SUPPLIER CODE:		
		V52828		
		SPECIFICATION NUMBER:		
		BACN10JR3CFD		
		OPTIONAL PART:		
		K51602-3BAC		
		V15653		
		NS202476-02		
		V80539		
		102F9201-3		
		V72962		
		T8092C1032CD		
		V11815		
		ATTACHING PARTS		
- 140	BACR15BA3ADC	...RIVET-	103106	8
		SIZE DETERMINED ON INSTL.		
		-------*-------		

MISSING ITEM NUMBERS NOT APPLICABLE

- ITEM NOT ILLUSTRATED

BOEING PROPRIETARY - Copyright © - Unpublished Work - See title page for details.

FIG ITEM	PART NUMBER	1 2 3 4 5 6 7 NOMENCLATURE	EFFECT FROM TO	UNITS PER ASSY
5				
145	284N1569-17	...ANGLE	103106	1
150	284N1569-20	..ANGLE ASSY	103106	1
155	BACN10GH3A6	...NUTPLATE	103106	3
		ATTACHING PARTS		
- 157	BACR15DR4AC	...RIVET-	103106	6
		SIZE DETERMINED ON INSTL.		
		-------*-------		
160	BRF200C3D	...NUTPLATE	103106	3
		SUPPLIER CODE:		
		V52828		
		SPECIFICATION NUMBER:		
		BACN10JR3CFD		
		OPTIONAL PART:		
		K51602-3BAC		
		V15653		
		NS202476-02		
		V80539		
		102F9201-3		
		V72962		
		T8092C1032CD		
		V11815		
		ATTACHING PARTS		
- 165	BACR15BA3ADC	...RIVET-	103106	6
		SIZE DETERMINED ON INSTL.		
		-------*-------		
170	284N1569-21	...ANGLE	103106	1
175	BACG20ZB000500	..GROMMET	103106	1
180	284N1720-4	..BRACKET-CONTACTOR	103106	2
		ATTACHING PARTS		
- 181	BACR15BB5ADC	..RIVET-	103106	6
		SIZE DETERMINED ON INSTL.		
		-------*-------		
190	284N1555-10	..BRACKET-DISC.	103106	1
		ATTACHING PARTS		
- 195	BACR15BB5ADC	..RIVET-	103106	10
		SIZE DETERMINED ON INSTL.		
		-------*-------		
- 300	286N1024-602	WIRE BUNDLE ASSY-	103106	RF
310	BACC45FN14-15P	.CONNECTOR-	103106	1
		POSITION DATA:		
		POS. 1		
		ELECTRICAL EQUIP NUMBER:		
		D42238J		
		WIRING DIAGRAM REF:		
		243312		

MISSING ITEM NUMBERS NOT APPLICABLE

- ITEM NOT ILLUSTRATED

BOEING PROPRIETARY - Copyright © - Unpublished Work - See title page for details.

FIG ITEM	PART NUMBER	1 2 3 4 5 6 7 NOMENCLATURE	EFFECT FROM TO	UNITS PER ASSY
5				
315	BACC45FN22-55S7	.RECEPTACLE- POSITION DATA: POS. 3 ELECTRICAL EQUIP NUMBER: D41680J WIRING DIAGRAM REF: 496111	103106	1
320	BACC45FN18-14P	.CONNECTOR- POSITION DATA: POS. 6 ELECTRICAL EQUIP NUMBER: D40170J WIRING DIAGRAM REF: 243141	103106	1
325	BACC45FN10-5P6	.CONNECTOR- POSITION DATA: POS. 7 ELECTRICAL EQUIP NUMBER: D41062J WIRING DIAGRAM REF: 282521	103106	1
330	BACC45FN22-32P7	.RECEPTACLE- POSITION DATA: POS. 8 ELECTRICAL EQUIP NUMBER: D42050J WIRING DIAGRAM REF: 496111	103106	1
335	BACC45FN16-24S	.CONNECTOR- POSITION DATA: POS. 11 ELECTRICAL EQUIP NUMBER: D42178J WIRING DIAGRAM REF: 243312	103106	1
340	BACC45FN20-25S6	.RECEPTACLE- POSITION DATA: POS 13 ELECTRICAL EQUIP NUMBER: D41688J WIRING DIAGRAM REF: 496114	103106	1
345	BACC45FN20-25S7	.RECEPTACLE- POSITION DATA: POS 14 ELECTRICAL EQUIP NUMBER: D41932J WIRING DIAGRAM REF: 523511	103106	1

MISSING ITEM NUMBERS NOT APPLICABLE

– ITEM NOT ILLUSTRATED

BOEING PROPRIETARY - Copyright © - Unpublished Work - See title page for details.

FIG ITEM	PART NUMBER	1 2 3 4 5 6 7 NOMENCLATURE	EFFECT FROM TO	UNITS PER ASSY
5				
350	BACC45FN12-12S8	.CONNECTOR-	103106	1
		POSITION DATA:		
		POS 15		
		ELECTRICAL EQUIP NUMBER:		
		D41770J		
		WIRING DIAGRAM REF:		
		282511		
355	BACC45FN20-25P9	.RECEPTACLE-	103106	1
		POSITION DATA:		
		POS 16		
		ELECTRICAL EQUIP NUMBER:		
		D42038J		
		WIRING DIAGRAM REF:		
		255121		
- 510	286N5978-701	WIRE BUNDLE ASSY	103106	RF
512	BACC45FT14-15S	.CONNECTOR-	103106	1
		ELECTRICAL EQUIP NUMBER:		
		D42238P		
		WIRING DIAGRAM REF:		
		283312		
- 530	286N5908-701	WIRE BUNDLE ASSY	103106	RF
532	BACC45FT22-55P7	.PLUG-	103106	1
		ELECTRICAL EQUIP NUMBER:		
		D41680P		
		WIRING DIAGRAM REF:		
		496111		
- 550	286N5930-701	WIRE BUNDLE ASSY	103106	RF
552	BACC45FT18-14S	.PLUG-	103106	1
		ELECTRICAL EQUIP NUMBER:		
		D40170P		
		WIRING DIAGRAM REF:		
		243141		
- 570	286N5936-601	WIRE BUNDLE ASSY-	103106	RF
572	BACC45FT10-5S6	.CONNECTOR-	103106	1
		ELECTRICAL EQUIP NUMBER:		
		D41062P		
		WIRING DIAGRAM REF:		
		261811		
- 580	286N1026-701	WIRE BUNDLE ASSY	103106	RF
582	BACC45FT22A32S7	.CONNECTOR-	103106	1
		ELECTRICAL EQUIP NUMBER:		
		D42050P		
		WIRING DIAGRAM REF:		
		496111		
584	BACC45FT16A24P	.CONNECTOR-	103106	1
		ELECTRICAL EQUIP NUMBER:		
		D42178P		
		WIRING DIAGRAM REF:		
		243312		

MISSING ITEM NUMBERS NOT APPLICABLE

- ITEM NOT ILLUSTRATED

BOEING PROPRIETARY - Copyright © - Unpublished Work - See title page for details.

FIG ITEM	PART NUMBER	1 2 3 4 5 6 7 NOMENCLATURE	EFFECT FROM TO	UNITS PER ASSY
5				
- 590	286N2654-701	WIRE BUNDLE ASSY	103106	RF
592	BACC45FT20-25P6	.CONNECTOR-	103106	1
		ELECTRICAL EQUIP NUMBER: D41688P		
		WIRING DIAGRAM REF: 496114		
- 600	286N2660-601	WIRE BUNDLE ASSY-	103106	RF
602	BACC45FT20-25P7	.PLUG-	103106	1
		ELECTRICAL EQUIP NUMBER: D41932P		
		WIRING DIAGRAM REF: 523511		
- 620	286N2658-601	WIRE BUNDLE ASSY-	103106	RF
624	BACC45FT12-12P8	.PLUG-	103106	1
		ELECTRICAL EQUIP NUMBER: D41770P		
		WIRING DIAGRAM REF: 282521		
- 640	286N5910-752	WIRE BUNDLE ASSY-	103106	RF
642	BACC45FT20-25S9	.CONNECTOR-	103106	1
		ELECTRICAL EQUIP NUMBER: D42038P		
		WIRING DIAGRAM REF: 255121		

MISSING ITEM NUMBERS NOT APPLICABLE

- ITEM NOT ILLUSTRATED

BOEING PROPRIETARY - Copyright © - Unpublished Work - See title page for details.

PILOTS MAIN PANELS

BOEING PROPRIETARY - Copyright © - Unpublished Work - See title page for details.

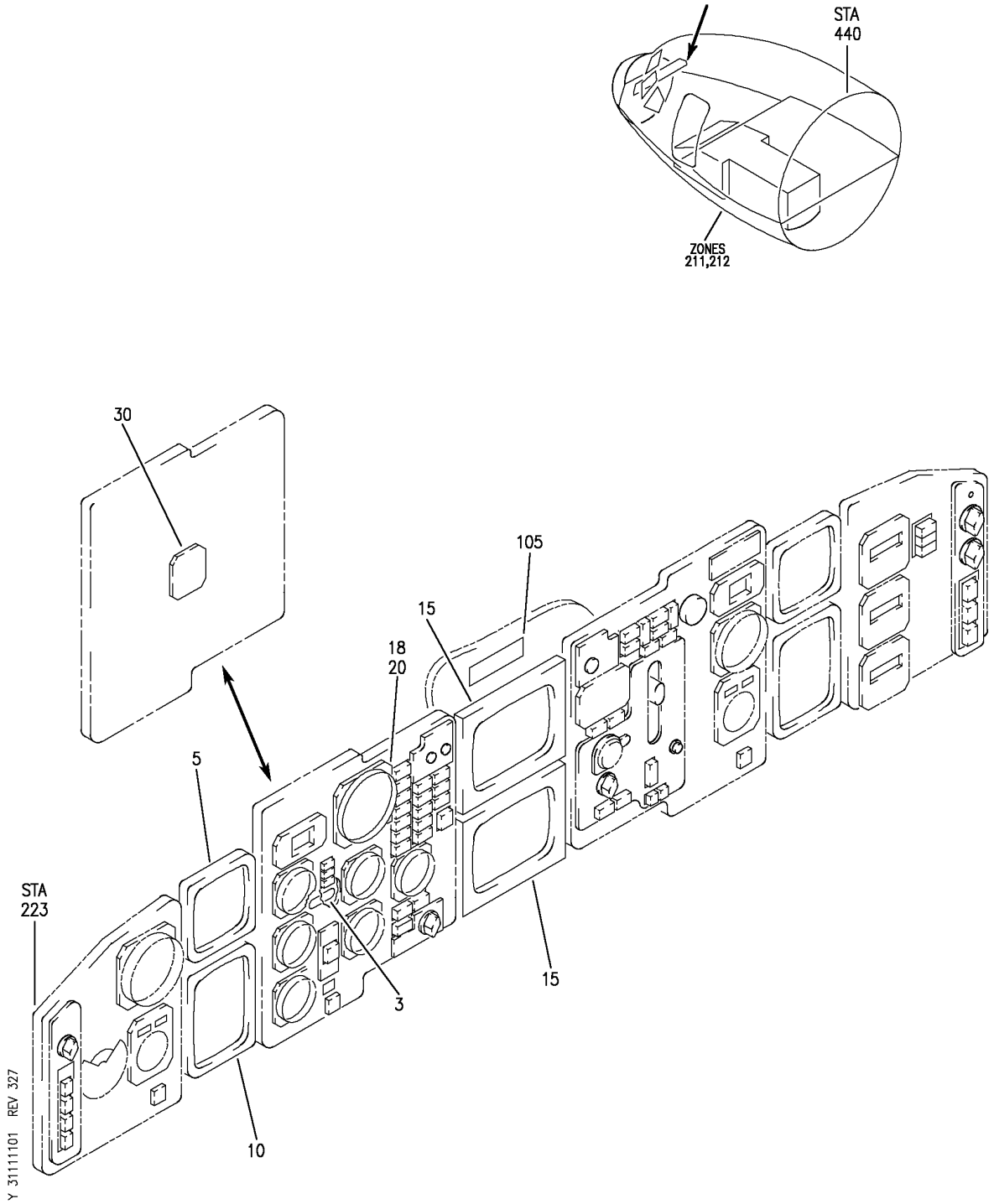

PANEL AND LEVEL INSTL-P1-1 AND P1-3 (CAPTAIN'S INSTRUMENT PANEL ONLY)
FIGURE 1

BOEING PROPRIETARY - Copyright © - Unpublished Work - See title page for details.

FIG ITEM	PART NUMBER	1 2 3 4 5 6 7 NOMENCLATURE	EFFECT FROM TO	UNITS PER ASSY
1		PANEL AND LEVEL INSTL-P1-1 AND P1-3 (CAPTAIN'S INSTRUMENT PANEL ONLY)	101106 108120 504903	RF
- 1	233N2103-1	PANEL INSTL-P1-1 AND P1-3 (CAPTAIN'S INSTRUMENT PANEL ONLY) FOR NHA/OTHER SYS DET SEE: 25-10-00-15	101102 108120 504903	RF
- 1	MODREF33340	PANEL INSTL-P1-1 AND P1-3 (CAPTAIN'S INSTRUMENT PANEL ONLY) MODULE NUMBER: 233N2103-100 REV A FOR OTHER SYS DETAILS SEE: 27-58-00-02 31-41-01-01 32-41-52-02 33-11-51-13 33-13-51-01 33-14-51-01 34-13-05-01 34-22-03-01 34-22-04-01 FOR ADDITIONAL DETAILS SEE: 31-11-26-01	103106	1
5	622-7998-003	.INDICATOR ASSY-ELECTRONIC ATTITUDE DIRECTOR MULTICOLOR DISPLAY UNIT SUPPLIER CODE: V4V792 SPECIFICATION NUMBER: S242T404-511 MISCELLANEOUS DATA: 622-7998-013 IS IDENTICAL TO 622-7998-003 EXCEPT THAT THE BEZEL COLOR IS GRAY INSTEAD OF BROWN. 622-7998-013 IS INTERCHANGEABLE WITH 622-7998-003 SUBJECT TO CUSTOMER PREFERENCE. ELECTRICAL EQUIP NUMBER: N00004 COMPONENT MAINT MANUAL REF: 34-22-60 FOR BREAKDOWN SEE: 34-22-03-01	101106 108120 504903	RF

MISSING ITEM NUMBERS NOT APPLICABLE

- ITEM NOT ILLUSTRATED

BOEING PROPRIETARY - Copyright © - Unpublished Work - See title page for details.

FIG ITEM	PART NUMBER	1 2 3 4 5 6 7 NOMENCLATURE	EFFECT FROM TO	UNITS PER ASSY
1				
10	622-7999-003	.INDICATOR ASSY-ELECTRONIC HORIZ SITUATION SUPPLIER CODE: V4V792 SPECIFICATION NUMBER: S242T404-611 MISCELLANEOUS DATA: 622-7999-013 IS IDENTICAL TO 622-7999-003 EXCEPT THAT THE BEZEL COLOR IS GRAY INSTEAD OF BROWN. 622-7999-013 IS INTERCHANGEABLE WITH 622-7999-003 SUBJECT TO CUSTOMER PREFERENCE. SEE SPARES DWG. 242N5002 FOR 757 INTERCHANGEABILITY FOR 767 SEE 242T4213 ELECTRICAL EQUIP NUMBER: N00005 COMPONENT MAINT MANUAL REF: 34-22-60 FOR BREAKDOWN SEE: 34-22-04-01	101106 108120 504903	RF

MISSING ITEM NUMBERS NOT APPLICABLE

– ITEM NOT ILLUSTRATED

BOEING PROPRIETARY - Copyright © - Unpublished Work - See title page for details.

FIG ITEM	PART NUMBER	1 2 3 4 5 6 7 NOMENCLATURE	EFFECT FROM TO	UNITS PER ASSY
1				
15	622-7999-003	.INDICATOR ASSY-ENG AND CREW ALERTING SYS SUPPLIER CODE: V4V792 SPECIFICATION NUMBER: S242T404-611 MISCELLANEOUS DATA: 622-7999-013 IS IDENTICAL TO 622-7999-003 EXCEPT THAT THE BEZEL COLOR IS GRAY INSTEAD OF BROWN. 622-7999-013 IS INTERCHANGEABLE WITH 622-7999-003 SUBJECT TO CUSTOMER PREFERENCE. SEE SPARES DWG. 242N5002 FOR 757 INTERCHANGEABILITY FOR 767 SEE 242T4213 ELECTRICAL EQUIP NUMBER: N10013 N10014 COMPONENT MAINT MANUAL REF: 34-22-60 FOR BREAKDOWN SEE: 31-41-01-01	101106 108120 504903	RF
20	H150AKM1	.INDICATOR ASSY-STBY ATTITUDE SUPPLIER CODE: VF6306 SPECIFICATION NUMBER: S231T110-6 ELECTRICAL EQUIP NUMBER: N00020 COMPONENT MAINT MANUAL REF: 34-23-80 FOR BREAKDOWN SEE: 34-24-01-03	101102 108120 504903	RF

MISSING ITEM NUMBERS NOT APPLICABLE

– ITEM NOT ILLUSTRATED

BOEING PROPRIETARY - Copyright © - Unpublished Work - See title page for details.

FIG ITEM	PART NUMBER	1 2 3 4 5 6 7 NOMENCLATURE	EFFECT FROM TO	UNITS PER ASSY
1				
30	C16221LA03	.INDICATOR-ISFD SUPPLIER CODE: VF9111 FUNCTIONAL DESCRIPTION: PROVIDES A VISUAL DISPLAY OF ATTITUDE, AIRSPEED, ALTITUDE, HEADING, AND OPTIONAL APPROACH DEVIATIONS. SPECIFICATION NUMBER: S231A120-6 ELECTRICAL EQUIP NUMBER: N10052 COMPONENT MAINT MANUAL REF: 34-22-45 QUALIFIED I/W DATA: C16221KA02(GREY BEZEL) I/W C16221LA03(BROWN BEZEL) I/W C16221QA01 (BROWN BEZEL) IF DESIRED BY CUSTOMER. C16221MA01 (GREY BEZEL) I/W C16221KA02 (GREY BEZEL) OR C16221LA03 (BROWN BEZEL) IF DESIRED BY CUSTOMER EXECPT C16221MA01 IS REQUIRED TO MAINTAIN CAT IIIB AUTOLAND CAPABILITY ON THOSE 737NG AIRCRAFT EQUIPPED FOR CAT IIIB OPERATION. FOR BREAKDOWN SEE: 34-13-05-01	103106	RF
- 100	233N2103-57	LEVEL INSTL- (CAPTAIN'S INSTRUMENT PANEL ONLY) FOR NHA SEE: 25-10-00-15B	504903	RF
105	1040	.INDICATOR-LEVEL SUPPLIER CODE: V50926	504903	1

MISSING ITEM NUMBERS NOT APPLICABLE

- ITEM NOT ILLUSTRATED

BOEING PROPRIETARY - Copyright © - Unpublished Work - See title page for details.

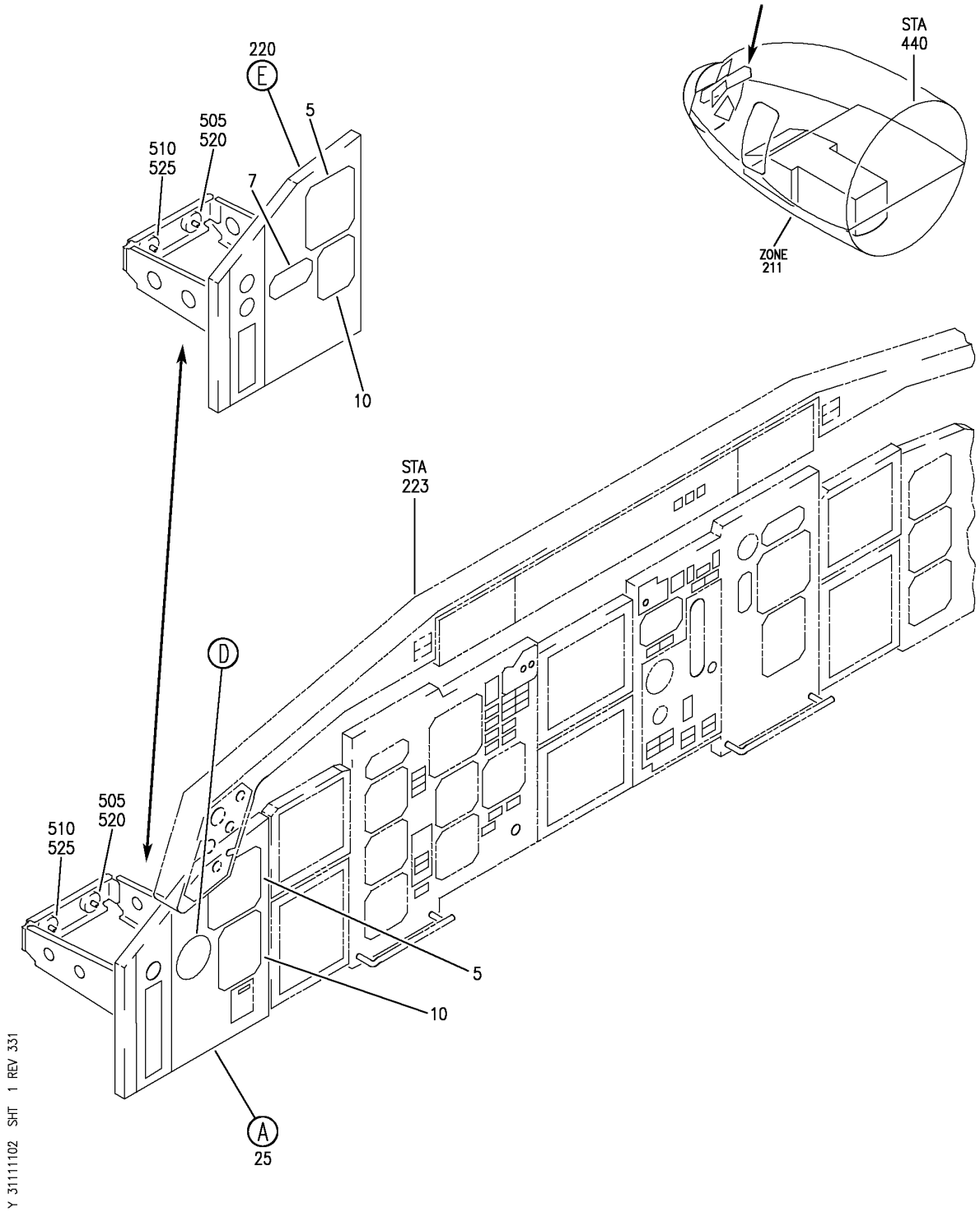

PANEL INSTL-P1-1 (CAPTAIN'S INSTRUMENT PANEL ONLY)
FIGURE 2 (SHEET 1)

BOEING PROPRIETARY - Copyright © - Unpublished Work - See title page for details.

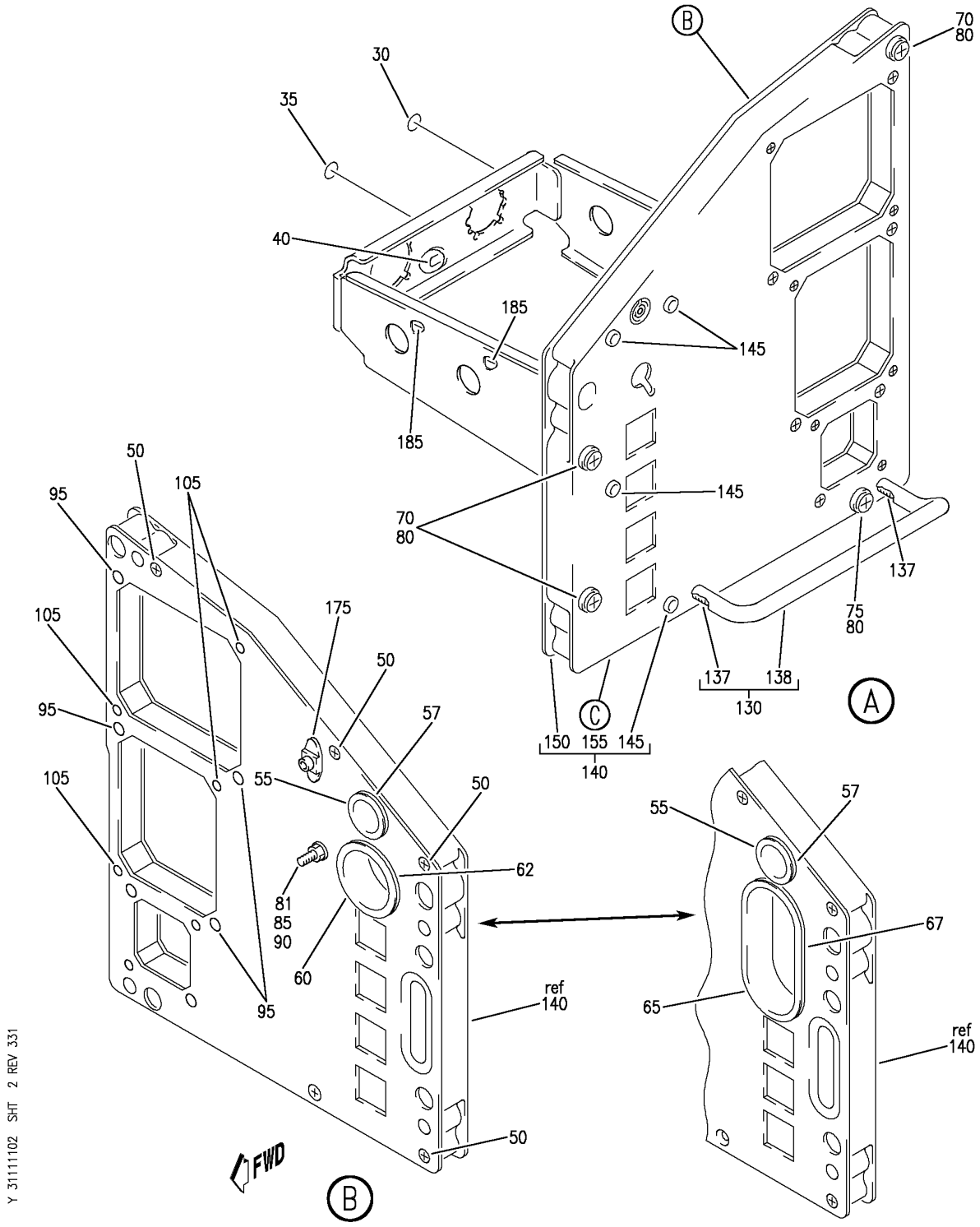

PANEL INSTL-P1-1 (CAPTAIN'S INSTRUMENT PANEL ONLY)
FIGURE 2 (SHEET 2)

BOEING PROPRIETARY - Copyright © - Unpublished Work - See title page for details.

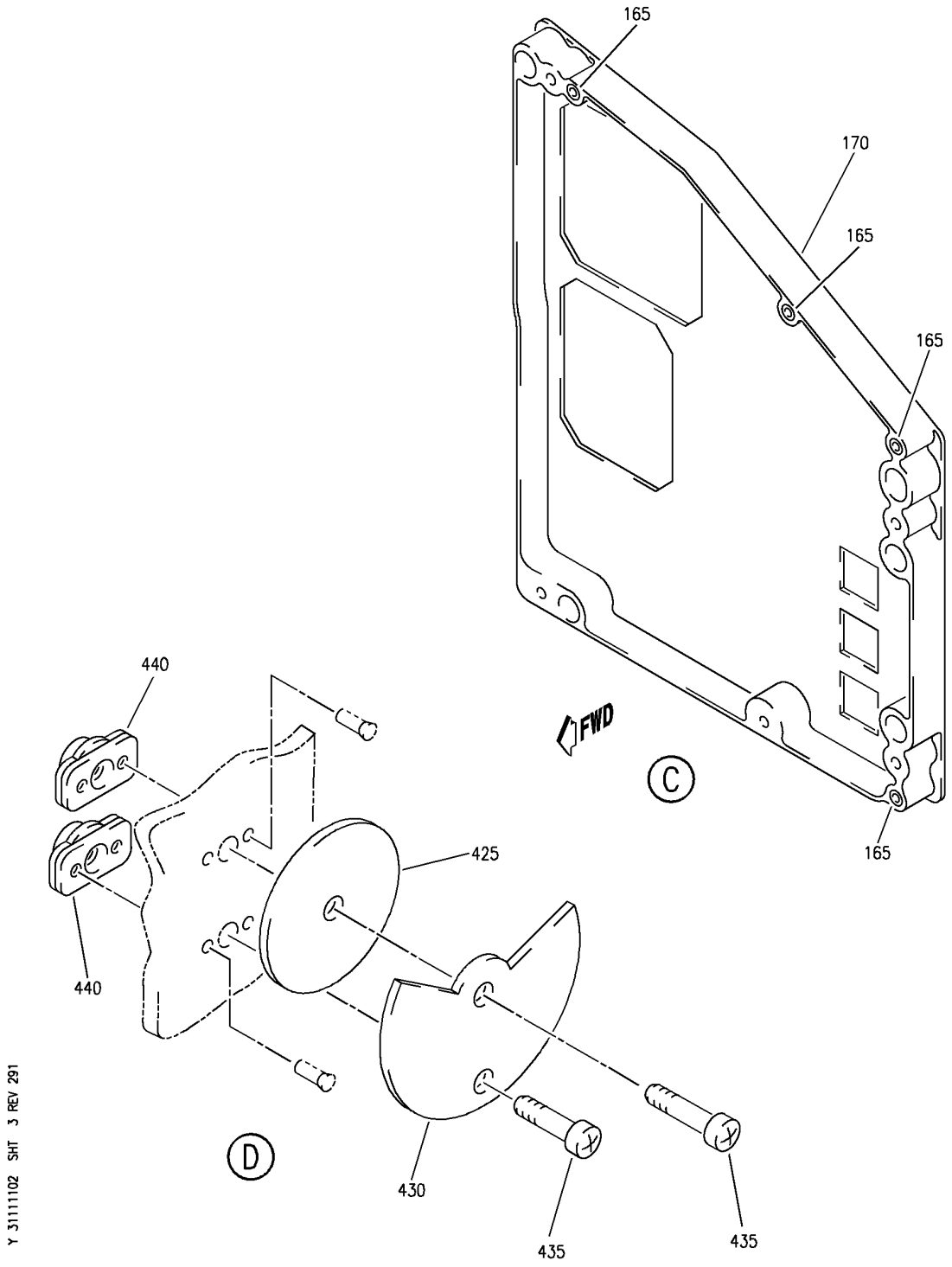

PANEL INSTL-P1-1 (CAPTAIN'S INSTRUMENT PANEL ONLY)
FIGURE 2 (SHEET 3)

BOEING PROPRIETARY - Copyright © - Unpublished Work - See title page for details.

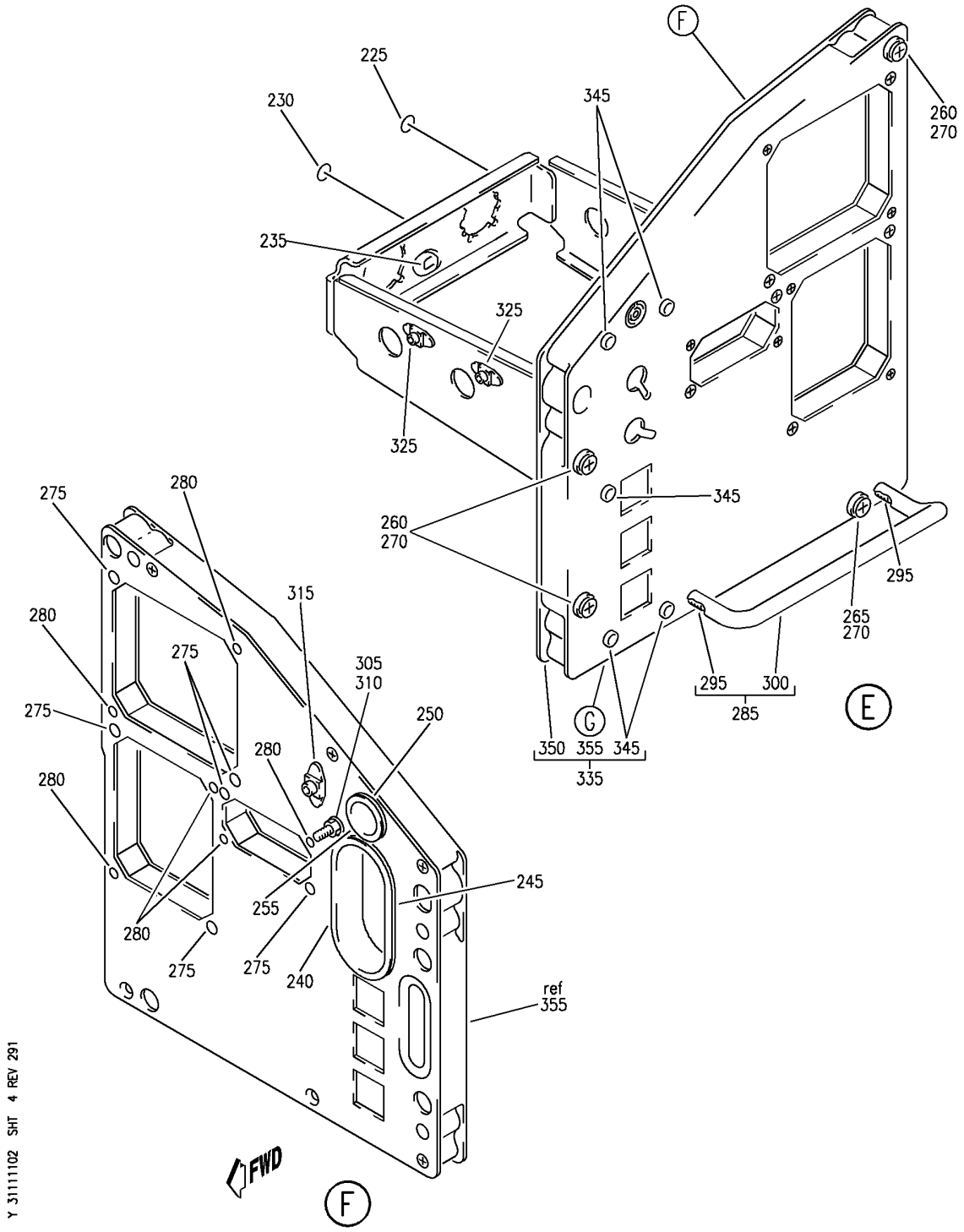

PANEL INSTL-P1-1 (CAPTAIN'S INSTRUMENT PANEL ONLY)
FIGURE 2 (SHEET 4)

BOEING PROPRIETARY - Copyright © - Unpublished Work - See title page for details.

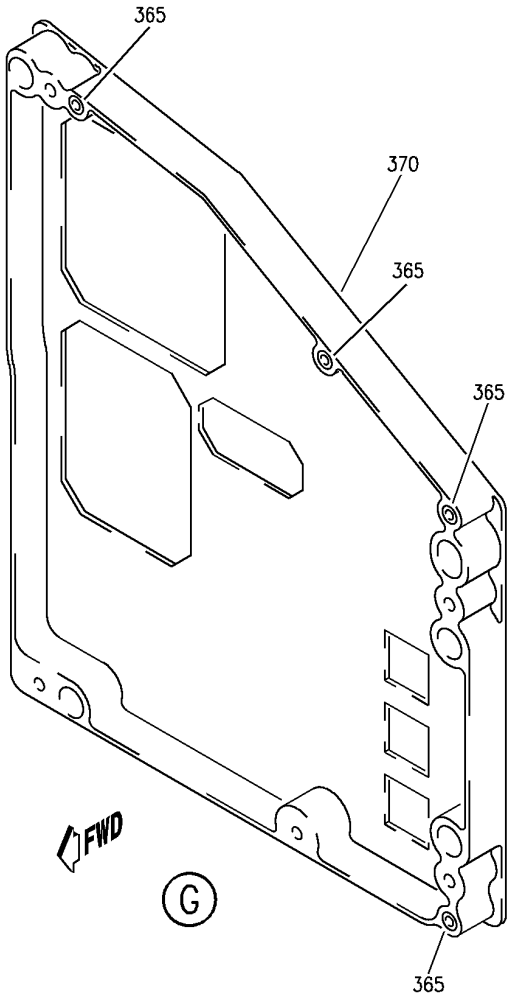

Y 31111102 SHT 5 REV 291

PANEL INSTL-P1-1 (CAPTAIN'S INSTRUMENT PANEL ONLY)
FIGURE 2 (SHEET 5)

BOEING PROPRIETARY - Copyright © - Unpublished Work - See title page for details.

FIG ITEM	PART NUMBER	1 2 3 4 5 6 7 NOMENCLATURE	EFFECT FROM TO	UNITS PER ASSY
2				
		PANEL INSTL-P1-1 (CAPTAIN'S INSTRUMENT PANEL ONLY)	101102 108120	
- 1	233N2103-7	PANEL INSTL-P1-1 (CAPTAIN'S INSTRUMENT PANEL ONLY) FOR NHA/OTHER SYS DET SEE: 25-10-00-15B	101101	RF
- 1	233N2103-107	PANEL INSTL-P1-1 (CAPTAIN'S INSTRUMENT PANEL ONLY) FOR NHA/OTHER SYS DET SEE: 25-10-00-15B	102102 108120	RF
5	4039891-903	.INDICATOR-MACH AIRSPEED SUPPLIER CODE: V58960 SPECIFICATION NUMBER: S231T100-1 ELECTRICAL EQUIP NUMBER: N00001 COMPONENT MAINT MANUAL REF: 34-13-09 FOR BREAKDOWN SEE: 34-13-02-01	101101	RF
5	4039891-906	.INDICATOR-MACH AIRSPEED SUPPLIER CODE: V58960 SPECIFICATION NUMBER: S231T100-4 ELECTRICAL EQUIP NUMBER: N00001 COMPONENT MAINT MANUAL REF: 34-13-09 FOR BREAKDOWN SEE: 34-13-02-01	102102 108120	RF

MISSING ITEM NUMBERS NOT APPLICABLE

– ITEM NOT ILLUSTRATED

BOEING PROPRIETARY - Copyright © - Unpublished Work - See title page for details.

FIG ITEM	PART NUMBER	1 2 3 4 5 6 7 NOMENCLATURE	EFFECT FROM TO	UNITS PER ASSY
2				
10	622-5001-109	.INDICATOR ASSY-DME/RADIO MAGNETIC SUPPLIER CODE: V4V792 SPECIFICATION NUMBER: S242T403-109 ELECTRICAL EQUIP NUMBER: N00003 COMPONENT MAINT MANUAL REF: 34-22-73 QUALIFIED I/W DATA: S242T403-107 (622-5001-107) RB S242T403-109 (622-5001-109) WITH THE INCORPORATION OF S/B 757-34-0018 AND VENDOR S/B (ROCKWELL COLLINS) RDM1 743-34-10(R1) FOR BREAKDOWN SEE: 34-22-05-01A	101102 108120	RF
- 20	233N2220-309	.MODULE ASSY- COMPONENT MAINT MANUAL REF: 31-11-47 QUALIFIED I/W DATA: 233N2220-329 CAN REPLACE 233N2220-309 FOR NT383-NT399 AIRCRAFT ONLY FOR OTHER SYS DETAILS SEE: 33-13-57-01A 34-12-01-03 34-13-02-01 34-21-02-02 34-22-02-02 34-22-05-01A 34-57-00-01 34-61-02-02	101102 108120	1
25	233N2220-21	..MODULE ASSY-	101102 108120	RF
30	BAC27NEL0187	...DECAL- PLACARD CONTENT: 1	101102 108120	1
35	BAC27NEL0188	...DECAL- PLACARD CONTENT: 2	101102 108120	1
40	BAC27NEL0338	...DECAL- PLACARD CONTENT: AP0101	101102 108120	1

MISSING ITEM NUMBERS NOT APPLICABLE

– ITEM NOT ILLUSTRATED

BOEING PROPRIETARY - Copyright © - Unpublished Work - See title page for details.

FIG ITEM	PART NUMBER	1 2 3 4 5 6 7 NOMENCLATURE	EFFECT FROM TO	UNITS PER ASSY
2				
50	NAS514P832-8	...SCREW-	101102 108120	4
55	233T2220-4	...CUP ASSY	101102 108120	1
57	233T2220-6	....SEAL	101102 108120	1
65	233T2220-33	...CUP ASSY-	101102 108120	1
67	233T2220-35	....SEAL	101102 108120	1
70	BACS21Y34R	...STUD ASSY- OPTIONAL PART: BACS21EE34R	101102 108120	3
70	BACS21EE34R	...STUD ASSY- OPTIONAL PART: BACS21Y34R	101102 108120	3
75	BACS21Y33R	...STUD ASSY- OPTIONAL PART: BACS21EE33R	101102 108120	1
75	BACS21EE33R	...STUD ASSY- OPTIONAL PART: BACS21Y33R	101102 108120	1
80	1127700	...WASHER SUPPLIER CODE: V60119 SPECIFICATION NUMBER: BACW10X4 OPTIONAL PART: 2600LW V71286	101102 108120	4
85	BRH10C3D	...NUT- SUPPLIER CODE: V52828 SPECIFICATION NUMBER: BACN10JC3CD OPTIONAL PART: T6C1032JCD V11815 NS202486-02 V80539 102LH9075-3W V72962 H51650-3BAC V15653 BACN10JC3CM USED ON: 233N2220-33	101102 108120	1

MISSING ITEM NUMBERS NOT APPLICABLE

— ITEM NOT ILLUSTRATED

BOEING PROPRIETARY - Copyright © - Unpublished Work - See title page for details.

FIG ITEM	PART NUMBER	1 2 3 4 5 6 7 NOMENCLATURE	EFFECT FROM TO	UNITS PER ASSY
2				
90	VNS1924CA2-8	...STUD-	101102	1
		SUPPLIER CODE:	108120	
		V5M902		
		SPECIFICATION NUMBER:		
		BACS53B1EA2		
		OPTIONAL PART:		
		VNS1924CA3-2-8		
		V92215		
		BACS53B1EA1		
90	VNS1924CA1-8	...STUD-	101102	1
		SUPPLIER CODE:	108120	
		V5M902		
		SPECIFICATION NUMBER:		
		BACS53B1EA1		
		OPTIONAL PART:		
		VNS1924CA3-1-8		
		V92215		
		BACS53B1EA2		
95	350-1	...SPACER-	101102	4
		SUPPLIER CODE:	108120	
		V28277		
105	012001-101	...SPACER-CRIMP	101102	4
		SUPPLIER CODE:	108120	
		V28277		
130	233T2218-2	...FOOTREST ASSY	101102	1
			108120	
		ATTACHING PARTS		
- 135	NAS514P1032-24	...SCREW-	101102	2
			108120	
		-------*-------		
137	MS21209F1-30	....INSERT	101102	2
			108120	
138	233T2218-4	....FOOTREST	101102	1
			108120	
140	233N2224-24	...PANEL ASSY-FWD	101102	1
			108120	
145	GR1003	....NUT-INSERT	101102	5
		SUPPLIER CODE:	108120	
		V0625B		
		OPTIONAL PART:		
		NAS1330A06K106		
145	NAS1330A06K106	....NUT-	101102	5
		OPTIONAL PART:	108120	
		GR1003		
		V0625B		
150	233N2224-26	....BACKPLATE-	101102	1
		ALTERED FROM PART NUMBER:	108120	
		233N2240-1		

MISSING ITEM NUMBERS NOT APPLICABLE

- ITEM NOT ILLUSTRATED

BOEING PROPRIETARY - Copyright © - Unpublished Work - See title page for details.

FIG ITEM	PART NUMBER	1 2 3 4 5 6 7 NOMENCLATURE	EFFECT FROM TO	UNITS PER ASSY
2				
155	233N2224-25	....FRAME ASSY-	101102 108120	1
- 160	233N2228-1	.....FRAME ASSY	101102 108120	1
165	MS21209C0825P	.....INSERT	101102 108120	4
170	233N2228-2	.....FRAME	101102 108120	1
175	WSI4-22	...NUT SUPPLIER CODE: V04169 SPECIFICATION NUMBER: BACN10TL3-22 ATTACHING PARTS	101102 108120	1
- 180	BACR15BB3AD	...RIVET- SIZE DETERMINED ON INSTL. -------*-------	101102 108120	2
185	WSI4-6	...NUTPLATE SUPPLIER CODE: V04169 SPECIFICATION NUMBER: BACN10TL3-6 ATTACHING PARTS	101102 108120	2
- 190	BACR15BA3AD	...RIVET- SIZE DETERMINED ON INSTL. -------*-------	101102 108120	4
- 500	286N0017-328	WIRE BUNDLE ASSY	101101	RF
- 501	286N0017-335	WIRE BUNDLE ASSY	102102	RF
- 501	286N0017-377	WIRE BUNDLE ASSY	108120	RF
505	BACC45FN16-24P	.CONNECTOR- ELECTRICAL EQUIP NUMBER: D40281J WIRING DIAGRAM REF: 342291	101102 108120	1
510	BACC45FN22-55P7	.CONNECTOR- ELECTRICAL EQUIP NUMBER: D40671J WIRING DIAGRAM REF: 342291	101102 108120	1
- 516	286N0001-361	WIRE BUNDLE ASSY- REWORKED BY ALERT SB: 34A0222	101101	RF
- 516	286N0001-365	WIRE BUNDLE ASSY- REWORKED BY ALERT SB: 34A0222	102102	RF
- 517	286N0001-392	WIRE BUNDLE ASSY- REWORKED BY ALERT SB: 34A0222	108120	RF

MISSING ITEM NUMBERS NOT APPLICABLE

- ITEM NOT ILLUSTRATED

BOEING PROPRIETARY - Copyright © - Unpublished Work - See title page for details.

FIG ITEM	PART NUMBER	1 2 3 4 5 6 7 NOMENCLATURE	EFFECT FROM TO	UNITS PER ASSY
2				
520	BACC45FT16A24S	.CONNECTOR- ELECTRICAL EQUIP NUMBER: D40281P WIRING DIAGRAM REF: 342291	101102 108120	1
525	BACC45FT22A55S7	.CONNECTOR- POSITION DATA: POSITION 02 ELECTRICAL EQUIP NUMBER: D40671P WIRING DIAGRAM REF: 342291 REWORKED BY ALERT SB: 34A0222	101102 108120	1

MISSING ITEM NUMBERS NOT APPLICABLE

– ITEM NOT ILLUSTRATED

BOEING PROPRIETARY - Copyright © - Unpublished Work - See title page for details.

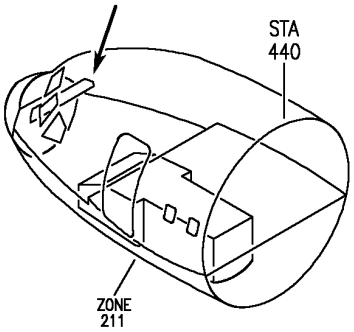

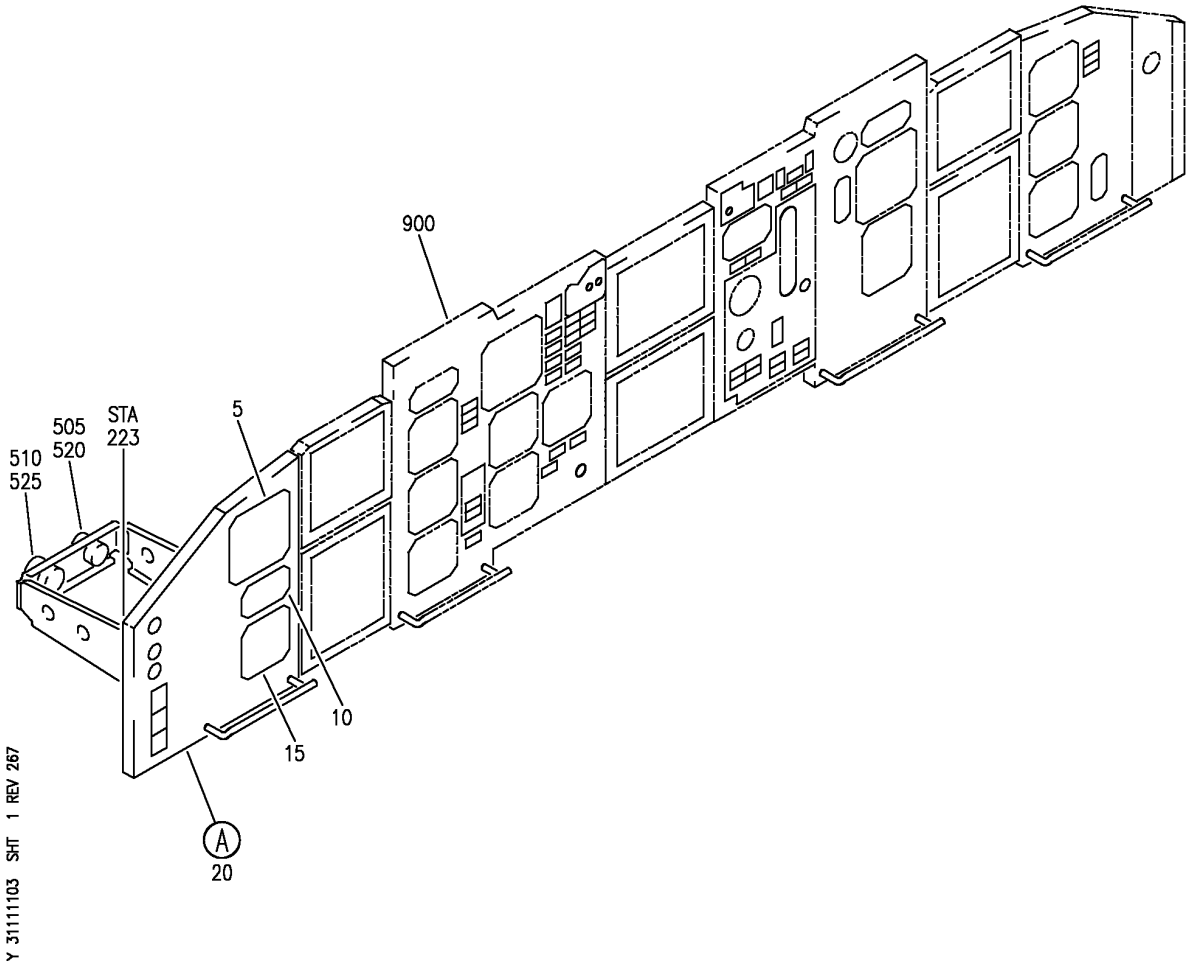

PANEL INSTL-P1-1 (INDICATING/RECORDING ONLY)
FIGURE 3 (SHEET 1)

BOEING PROPRIETARY - Copyright © - Unpublished Work - See title page for details.

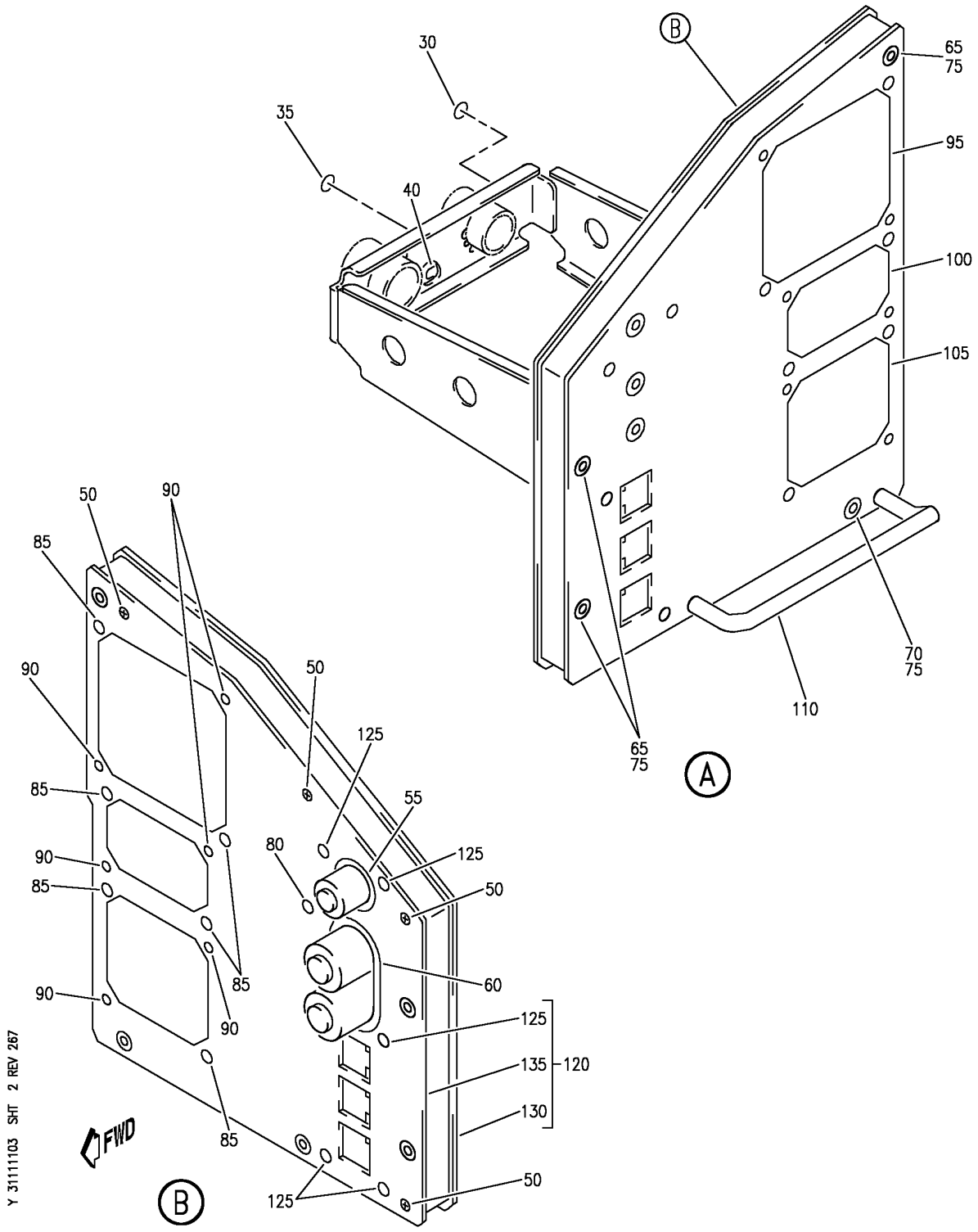

PANEL INSTL-P1-1 (INDICATING/RECORDING ONLY)
FIGURE 3 (SHEET 2)

BOEING PROPRIETARY - Copyright © - Unpublished Work - See title page for details.

FIG ITEM	PART NUMBER	1 2 3 4 5 6 7 NOMENCLATURE	EFFECT FROM TO	UNITS PER ASSY
3				
		PANEL INSTL-P1-1 (INDICATING/RECORDING ONLY)	504903	
- 1	233N2103-152	PANEL INSTL-P1-1 (INDICATING AND RECORDING ONLY) FOR NHA SEE: 25-10-00-15B	504903	RF
5	4039891-907	.INDICATOR-MACH AIRSPEED SUPPLIER CODE: V58960 SPECIFICATION NUMBER: S231T100-5 ELECTRICAL EQUIP NUMBER: N00001 COMPONENT MAINT MANUAL REF: 34-13-09 FOR BREAKDOWN SEE: 34-13-02-01	504903	RF
10	622-5990-302	.INDICATOR-DUAL DISTANCE SUPPLIER CODE: V4V792 SPECIFICATION NUMBER: S242T403-302 ELECTRICAL EQUIP NUMBER: N10030 COMPONENT MAINT MANUAL REF: 34-22-76 FOR BREAKDOWN SEE: 34-55-03-01	504903	RF

MISSING ITEM NUMBERS NOT APPLICABLE

- ITEM NOT ILLUSTRATED

BOEING PROPRIETARY - Copyright © - Unpublished Work - See title page for details.

	FIG ITEM	PART NUMBER	1 2 3 4 5 6 7 NOMENCLATURE	EFFECT FROM TO	UNITS PER ASSY
	3				
R	15	2610-08-1	.CLOCK ASSY-	504903	RF
R			SUPPLIER CODE:		
R			V52013		
R			FUNCTIONAL DESCRIPTION:		
R			DIGITAL ELECTRONIC		
R			CHRONOMETER, SHOWS		
R			ELAPSED TIME,		
R			CHRONOGRAPH TIME, DATE		
R			AND GREENWICH MEAN TIME.		
R			SPECIFICATION NUMBER:		
R			60B00303-107		
R			ELECTRICAL EQUIP NUMBER:		
R			N00002		
R			COMPONENT MAINT MANUAL REF:		
R			31-21-08		
R			QUALIFIED I/W DATA:		
R			2610-08-1(60B00303-107)		
R			I/W		
R			65806-002-1(S231T120-1)		
R			IN SHIPSETS, FOR ALL FMC		
R			EXCEPT S242T102-451 WITH		
R			S/W PS4052970-95X, WHERE		
R			X CAN BE ANY VALUE, AND		
R			S242T102-455.		
R			65807-050-1 AND		
R			2610-08-1 ARE		
R			INTERCHANGEABLE AS A		
R			SET ONLY		
R			FOR BREAKDOWN SEE:		
R			31-25-01-03		
	20	233N2220-315	.MODULE ASSY-	504903	1
			COMPONENT MAINT MANUAL REF:		
			31-11-47		
			FOR OTHER SYS DETAILS SEE:		
			31-25-01-06		
			33-13-57-01A		
			34-12-01-03		
			34-13-02-01		
			34-21-02-02		
			34-22-02-02		
			34-55-03-01		
			34-57-00-01		
			34-61-02-02		
-	25	233N2220-27	..MODULE ASSY	504903	RF
	30	BAC27NEL0187	...DECAL-	504903	1
			PLACARD CONTENT:		
			1		

MISSING ITEM NUMBERS NOT APPLICABLE

– ITEM NOT ILLUSTRATED

BOEING PROPRIETARY - Copyright © - Unpublished Work - See title page for details.

FIG ITEM	PART NUMBER	1 2 3 4 5 6 7 NOMENCLATURE	EFFECT FROM TO	UNITS PER ASSY
3				
35	BAC27NEL0188	...DECAL-	504903	1
		PLACARD CONTENT:		
		2		
40	BAC27NEL0338	...DECAL-	504903	1
		PLACARD CONTENT:		
		AP0101		
50	MS24693C50	...SCREW	504903	4
55	233T2220-4	...CUP ASSY	504903	1
60	233T2220-33	...CUP ASSY	504903	1
65	BACS21Y34R	...STUD ASSY	504903	3
70	BACS21Y33R	...STUD ASSY	504903	1
75	1127700	...WASHER	504903	4
		SUPPLIER CODE:		
		V60119		
		SPECIFICATION NUMBER:		
		BACW10X4		
		OPTIONAL PART:		
		2600LW		
		V71286		
80	VNS1924CA2-8	...STUD-	504903	1
		SUPPLIER CODE:		
		V5M902		
		SPECIFICATION NUMBER:		
		BACS53B1EA2		
		OPTIONAL PART:		
		VNS1924CA3-2-8		
		V92215		
		BACS53B1EA1		
80	VNS1924CA1-8	...STUD-	504903	1
		SUPPLIER CODE:		
		V5M902		
		SPECIFICATION NUMBER:		
		BACS53B1EA1		
		OPTIONAL PART:		
		VNS1924CA3-1-8		
		V92215		
		BACS53B1EA2		
85	350-1	...SPACER-	504903	6
		SUPPLIER CODE:		
		V28277		
90	012001-101	...SPACER-CRIMP	504903	6
		SUPPLIER CODE:		
		V28277		
95	123-4D	...CLAMP-	504903	1
		SUPPLIER CODE:		
		V33463		
100	123-32161G	...CLAMP-	504903	1
		SUPPLIER CODE:		
		V33463		

MISSING ITEM NUMBERS NOT APPLICABLE

– ITEM NOT ILLUSTRATED

BOEING PROPRIETARY - Copyright © - Unpublished Work - See title page for details.

FIG ITEM	PART NUMBER	1 2 3 4 5 6 7 NOMENCLATURE	EFFECT FROM TO	UNITS PER ASSY
3				
105	123-3D	...CLAMP-	504903	1
		SUPPLIER CODE:		
		V33463		
110	233T2218-2	...FOOTREST ASSY	504903	1
		ATTACHING PARTS		
- 115	MS24693C280	...SCREW	504903	2
		-------*-------		
120	233N2224-16	...PANEL ASSY-	504903	1
		POSITION DATA:		
		FWD		
125	GR1003	....NUT-INSERT	504903	5
		SUPPLIER CODE:		
		V0625B		
130	233N2224-18	....PLATE	504903	1
135	233N2224-17	....FRAME ASSY	504903	1
- 500	286N0017-341	WIRE BUNDLE ASSY	504903	RF
505	BACC45FN16-24P	.CONNECTOR-	504903	1
		ELECTRICAL EQUIP NUMBER:		
		D40281J		
		WIRING DIAGRAM REF:		
		342291		
510	BACC45FN22-55P7	.CONNECTOR-	504903	1
		ELECTRICAL EQUIP NUMBER:		
		D40671J		
		WIRING DIAGRAM REF:		
		342291		
- 515	286N0001-382	WIRE BUNDLE ASSY-	504504	RF
		REWORKED BY ALERT SB:	506506	
		34A0222		
- 515	286N0001-357	WIRE BUNDLE ASSY-	505505	RF
		REWORKED BY ALERT SB:	507903	
		34A0222		
520	BACC45FT16A24S	.CONNECTOR-	504903	1
		ELECTRICAL EQUIP NUMBER:		
		D40281P		
		WIRING DIAGRAM REF:		
		342291		
525	BACC45FT22A55S7	.CONNECTOR-	504903	1
		ELECTRICAL EQUIP NUMBER:		
		D40671P		
		WIRING DIAGRAM REF:		
		342291		
		REWORKED BY ALERT SB:		
		34A0222		

MISSING ITEM NUMBERS NOT APPLICABLE

- ITEM NOT ILLUSTRATED

BOEING PROPRIETARY - Copyright © - Unpublished Work - See title page for details.

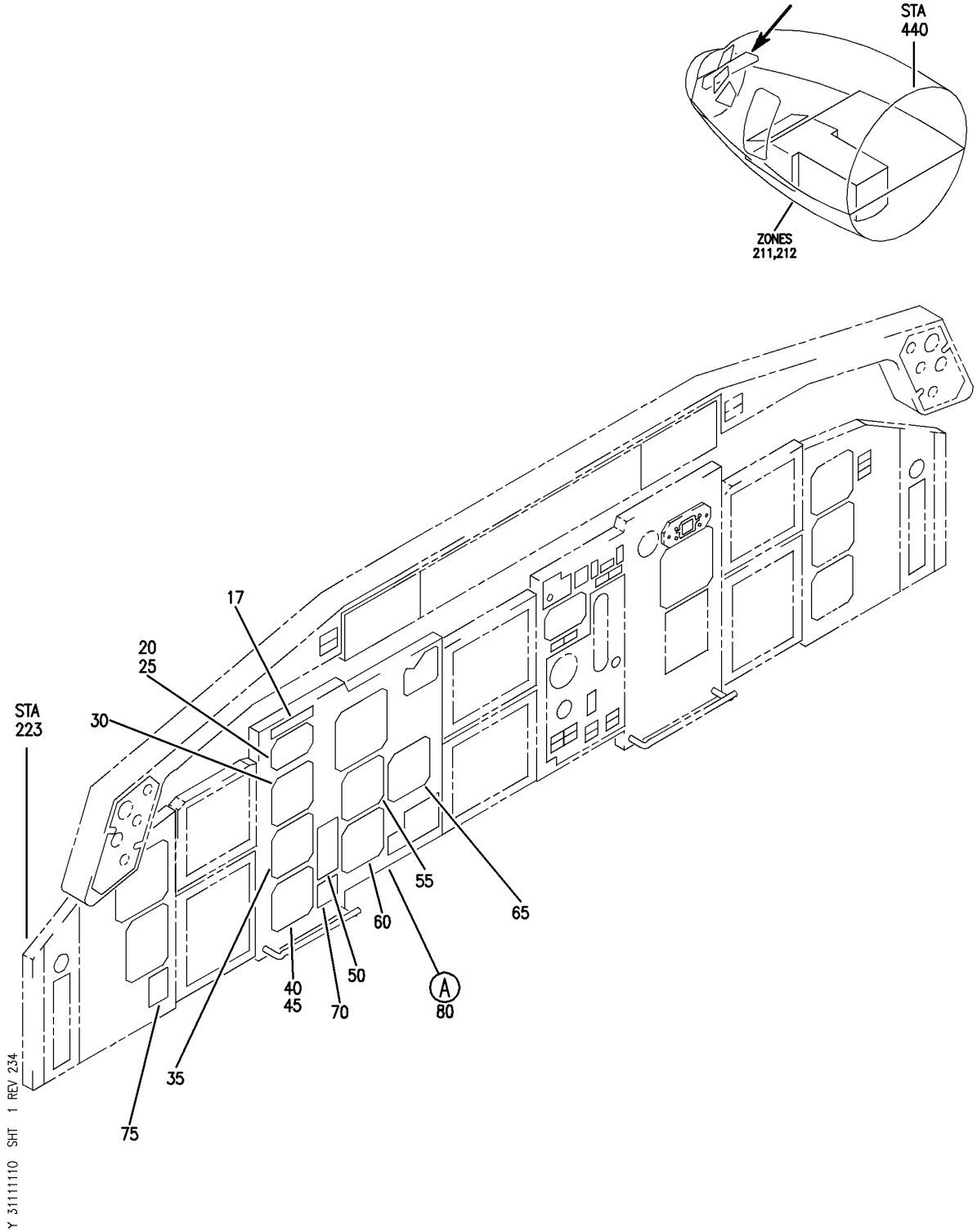

PANEL INSTL-P1-3 (CAPTAIN'S INSTRUMENT PANEL ONLY)
FIGURE 10 (SHEET 1)

BOEING PROPRIETARY - Copyright © - Unpublished Work - See title page for details.

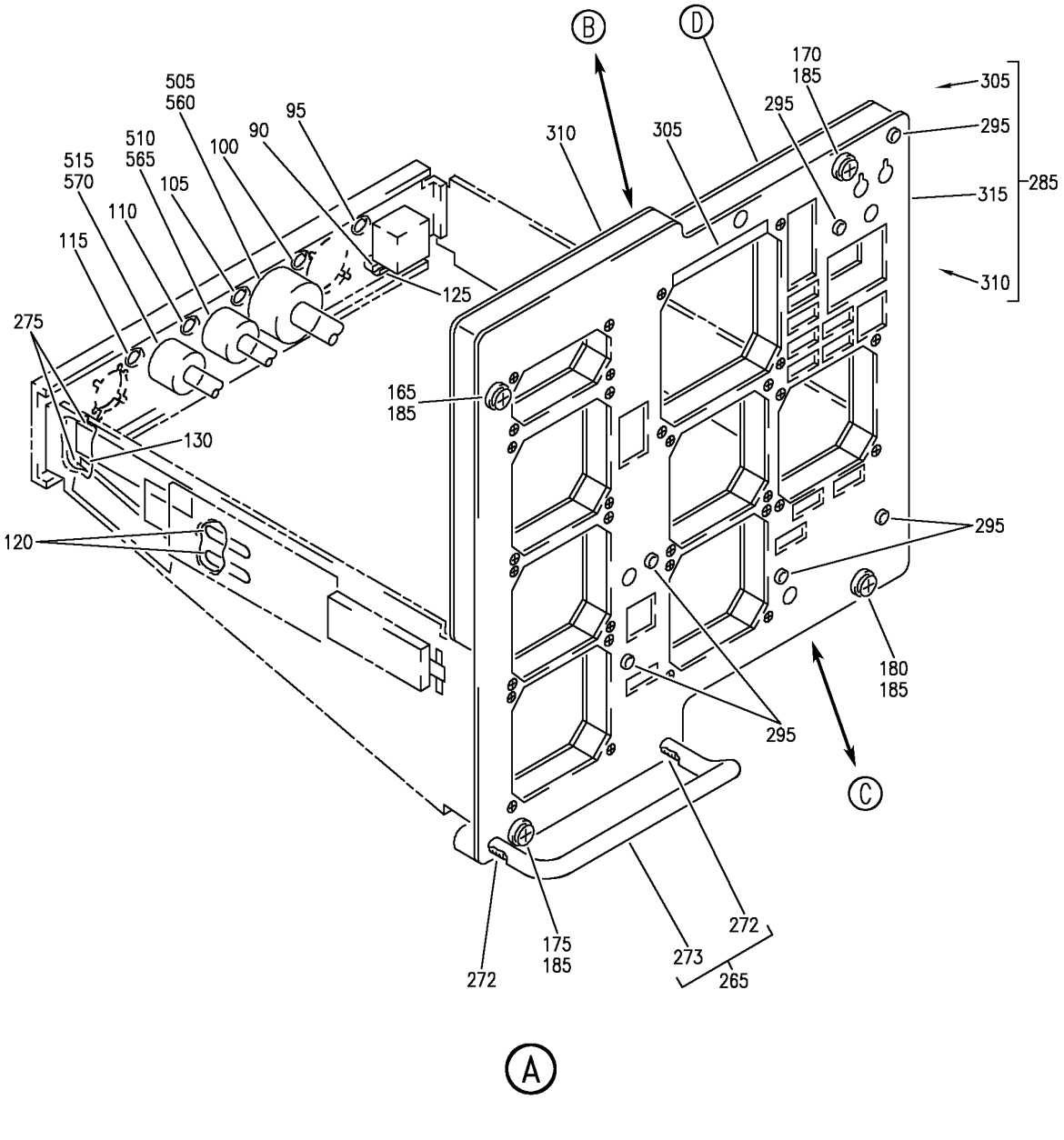

PANEL INSTL-P1-3 (CAPTAIN'S INSTRUMENT PANEL ONLY)
FIGURE 10 (SHEET 2)

BOEING PROPRIETARY - Copyright © - Unpublished Work - See title page for details.

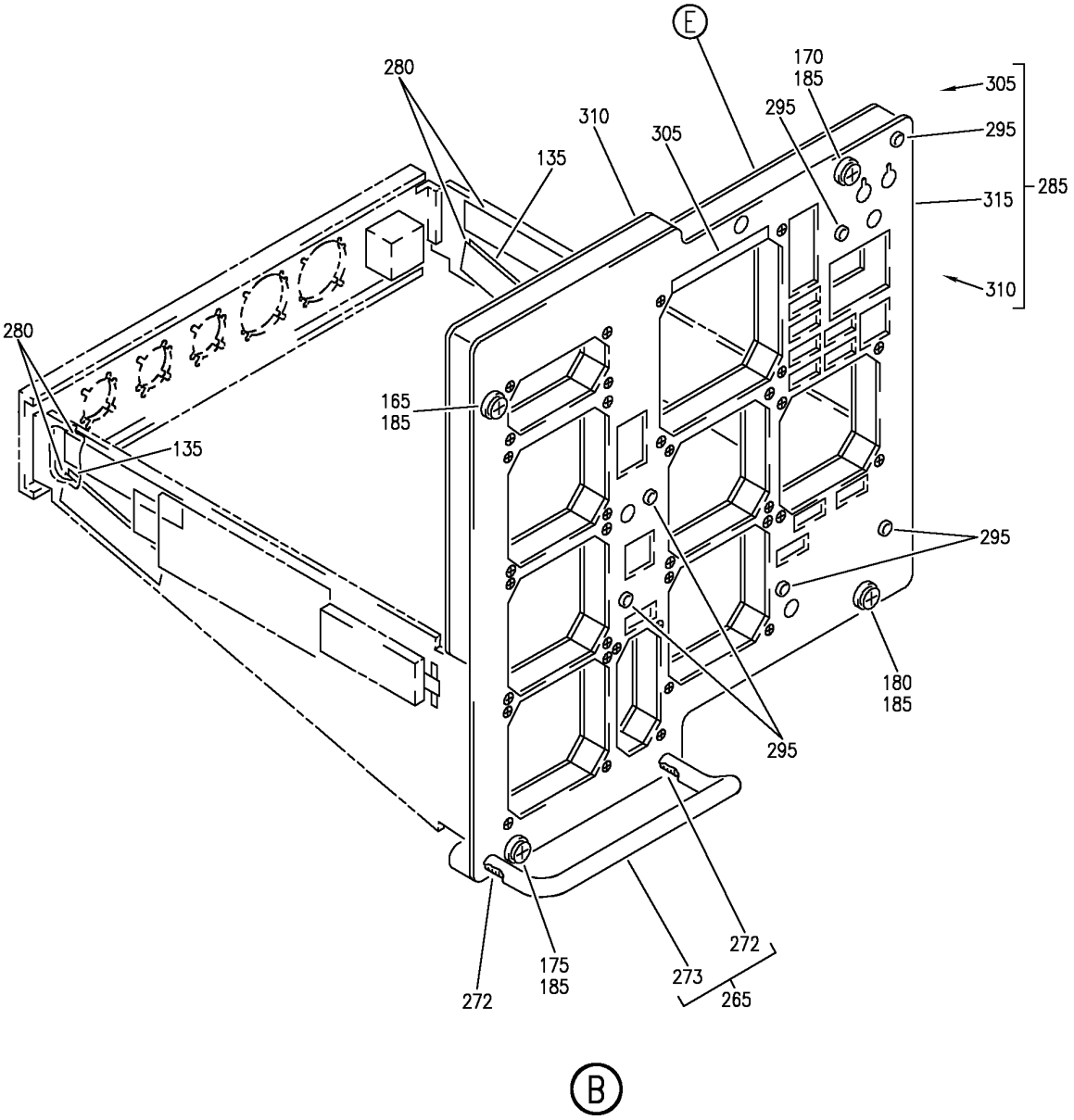

PANEL INSTL-P1-3 (CAPTAIN'S INSTRUMENT PANEL ONLY)
FIGURE 10 (SHEET 3)

BOEING PROPRIETARY - Copyright © - Unpublished Work - See title page for details.

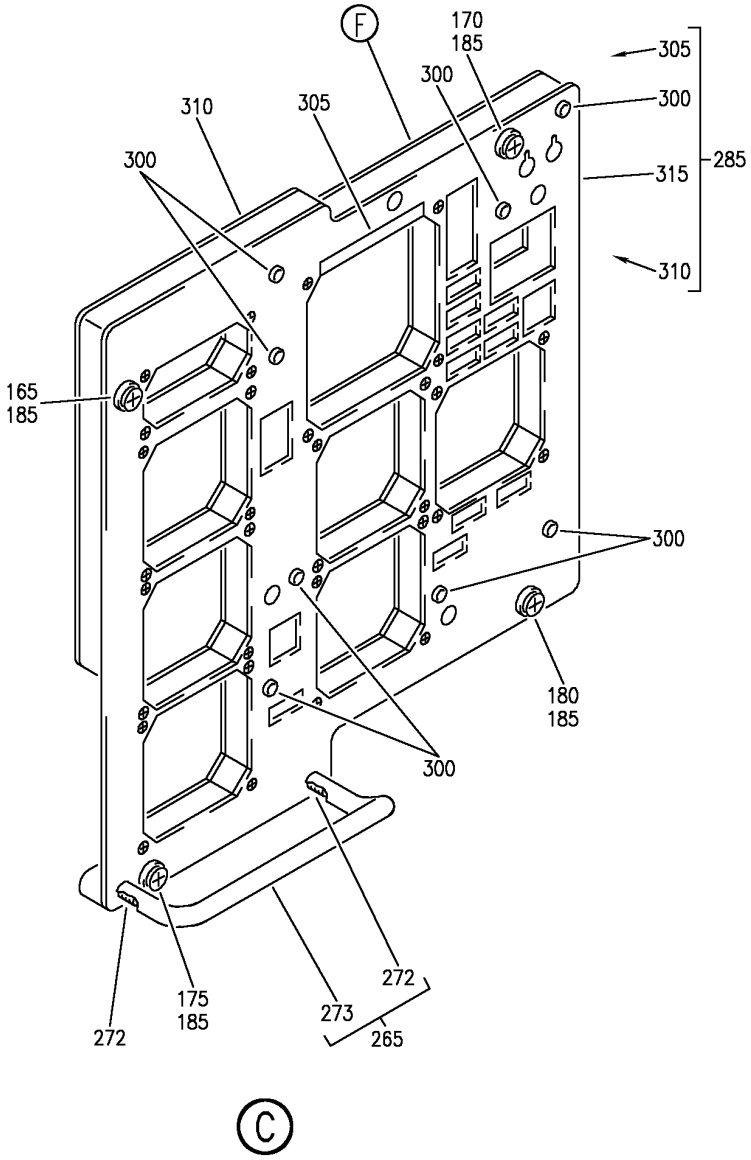

Y 31111110 SHT 4 REV 246

PANEL INSTL-P1-3 (CAPTAIN'S INSTRUMENT PANEL ONLY)
FIGURE 10 (SHEET 4)

BOEING PROPRIETARY - Copyright © - Unpublished Work - See title page for details.

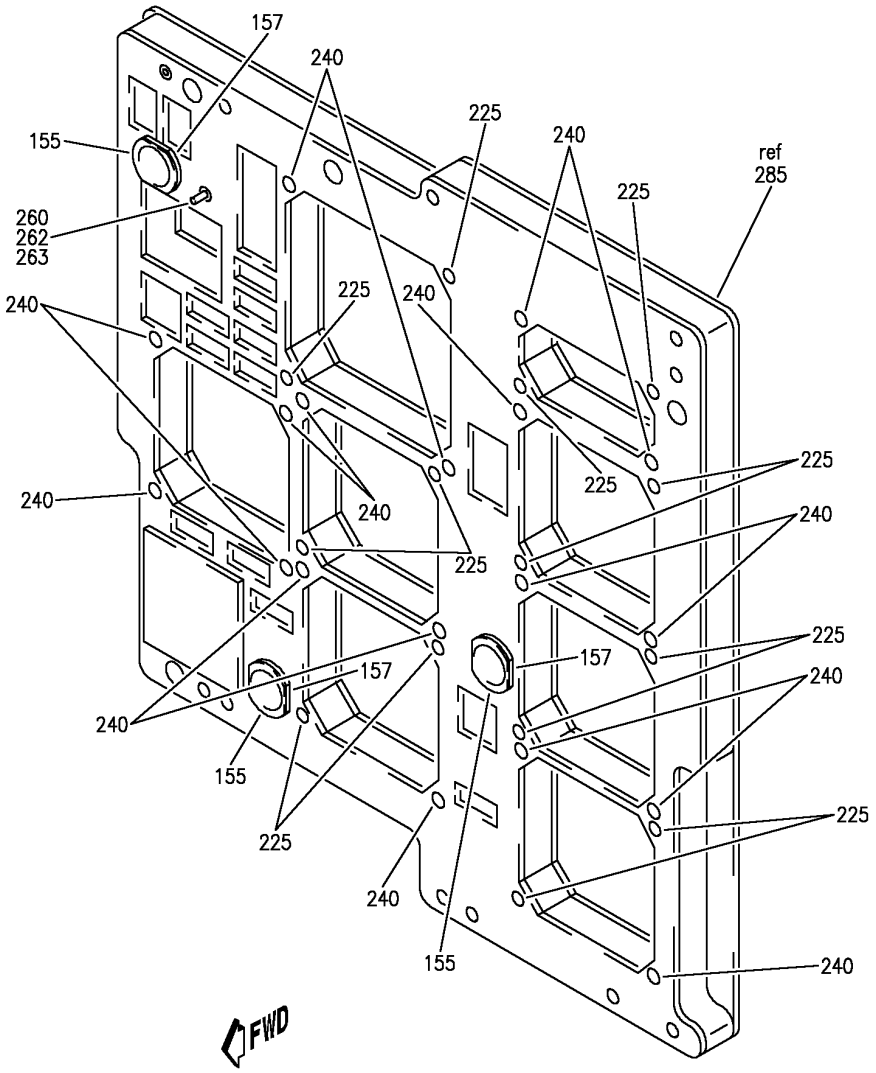

Y 31111110 SHT 5 REV 266

D

PANEL INSTL-P1-3 (CAPTAIN'S INSTRUMENT PANEL ONLY)
FIGURE 10 (SHEET 5)

BOEING PROPRIETARY - Copyright © - Unpublished Work - See title page for details.

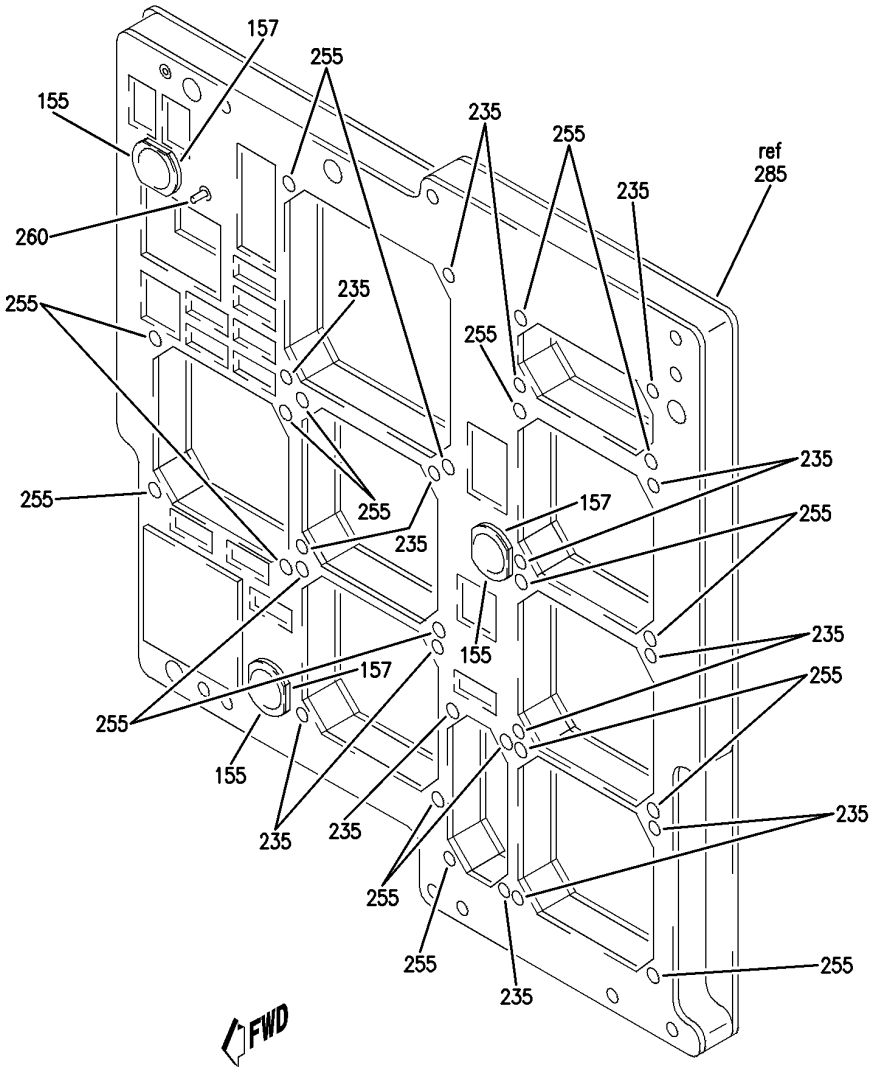

Y 31111110 SHT 6 REV 235

E

PANEL INSTL-P1-3 (CAPTAIN'S INSTRUMENT PANEL ONLY)
FIGURE 10 (SHEET 6)

BOEING PROPRIETARY - Copyright © - Unpublished Work - See title page for details.

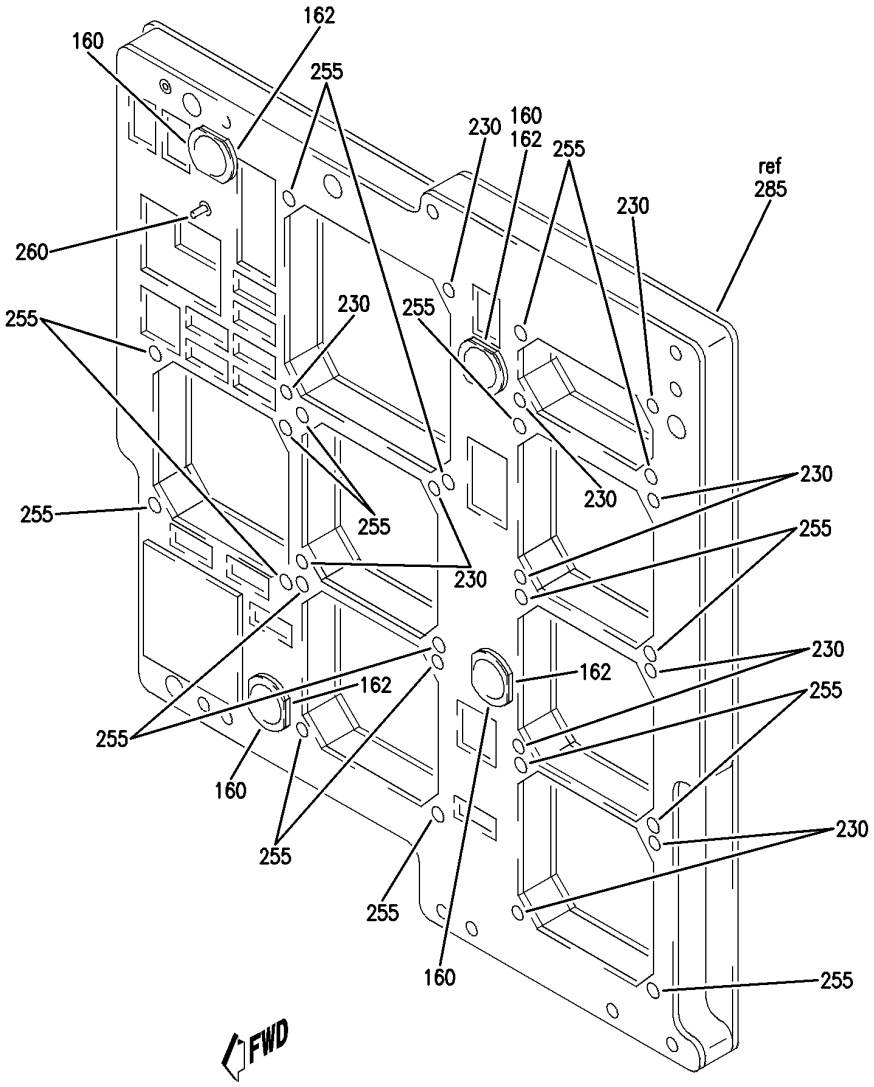

Y 31111110 SHT 7 REV 235

F

PANEL INSTL-P1-3 (CAPTAIN'S INSTRUMENT PANEL ONLY)
FIGURE 10 (SHEET 7)

BOEING PROPRIETARY - Copyright © - Unpublished Work - See title page for details.

FIG ITEM	PART NUMBER	1 2 3 4 5 6 7 NOMENCLATURE	EFFECT FROM TO	UNITS PER ASSY
10				
		PANEL INSTL-P1-3	101102	
		(CAPTAIN'S INSTRUMENT	108120	
		PANEL ONLY)	504903	
- 1	233N2103-10	PANEL INSTL-P1-3	108120	RF
		(CAPTAIN'S INSTRUMENT		
		PANEL ONLY)		
		FOR NHA/OTHER SYS DET SEE:		
		25-10-00-15B		
- 1	233N2103-72	PANEL INSTL-P1-3	101102	RF
		(CAPTAIN'S INSTRUMENT		
		PANEL ONLY)		
		FOR NHA/OTHER SYS DET SEE:		
		25-10-00-15B		
- 1	233N2103-280	PANEL INSTL-P1-3	504903	RF
		(CAPTAIN'S INSTRUMENT		
		PANEL ONLY)		
		FOR NHA/OTHER SYS DET SEE:		
		25-10-00-15B		
20	622-5374-002	.INDICATOR ASSY-AUTOLAND	101102	RF
		STATUS	108120	
		SUPPLIER CODE:		
		V4V792		
		SPECIFICATION NUMBER:		
		S241T120-1		
		ELECTRICAL EQUIP NUMBER:		
		N00070		
		COMPONENT MAINT MANUAL REF:		
		22-14-70		
		FOR BREAKDOWN SEE:		
		22-14-01-03		
20	622-5374-003	.INDICATOR ASSY-AUTOLAND	504903	RF
		STATUS		
		SUPPLIER CODE:		
		V4V792		
		SPECIFICATION NUMBER:		
		S241T120-2		
		ELECTRICAL EQUIP NUMBER:		
		N00070		
		COMPONENT MAINT MANUAL REF:		
		22-14-70		
		FOR BREAKDOWN SEE:		
		22-14-01-03		

MISSING ITEM NUMBERS NOT APPLICABLE

- ITEM NOT ILLUSTRATED

BOEING PROPRIETARY - Copyright © - Unpublished Work - See title page for details.

FIG ITEM	PART NUMBER	1 2 3 4 5 6 7 NOMENCLATURE	EFFECT FROM TO	UNITS PER ASSY
10				
30	4039892-904	.INDICATOR ASSY-ALTM SUPPLIER CODE: V58960 SPECIFICATION NUMBER: S231T101-1 ELECTRICAL EQUIP NUMBER: N00008 COMPONENT MAINT MANUAL REF: 34-13-08 FOR BREAKDOWN SEE: 34-13-01-02	108120 504903	RF
30	4039892-907	.INDICATOR ASSY-ALTM SUPPLIER CODE: V58960 SPECIFICATION NUMBER: S231T101-4 ELECTRICAL EQUIP NUMBER: N00008 COMPONENT MAINT MANUAL REF: 34-13-08 FOR BREAKDOWN SEE: 34-13-01-02	101102	RF
35	4039893-902	.INDICATOR-VERT SPEED SUPPLIER CODE: V58960 SPECIFICATION NUMBER: S231T102-1 ELECTRICAL EQUIP NUMBER: N00009 COMPONENT MAINT MANUAL REF: 34-13-07 FOR BREAKDOWN SEE: 34-22-06-01	101102 108120 504903	RF

MISSING ITEM NUMBERS NOT APPLICABLE

– ITEM NOT ILLUSTRATED

BOEING PROPRIETARY - Copyright © - Unpublished Work - See title page for details.

	FIG ITEM	PART NUMBER	1 2 3 4 5 6 7 NOMENCLATURE	EFFECT FROM TO	UNITS PER ASSY
	10				
R	40	2610-08-1	.CLOCK ASSY-ELECT.	101102	RF
R			SUPPLIER CODE:	108120	
R			V52013		
R			FUNCTIONAL DESCRIPTION:		
R			DIGITAL ELECTRONIC		
R			CHRONOMETER, SHOWS		
R			ELAPSED TIME,		
R			CHRONOGRAPH TIME, DATE		
R			AND GREENWICH MEAN TIME.		
R			SPECIFICATION NUMBER:		
R			60B00303-107		
R			ELECTRICAL EQUIP NUMBER:		
R			N00002		
R			COMPONENT MAINT MANUAL REF:		
R			31-21-08		
R			QUALIFIED I/W DATA:		
R			2610-08-1(60B00303-107)		
R			I/W		
R			65806-002-1(S231T120-1)		
R			IN SHIPSETS, FOR ALL FMC		
R			EXCEPT S242T102-451 WITH		
R			S/W PS4052970-95X, WHERE		
R			X CAN BE ANY VALUE, AND		
R			S242T102-455.		
R			65807-050-1 AND		
R			2610-08-1 ARE		
R			INTERCHANGEABLE AS A		
R			SET ONLY		
R			FOR BREAKDOWN SEE:		
R			31-25-01-03		
	45	622-5002-203	.INDICATOR ASSY-RADIO	504903	1
			MAGNETIC/DME		
			SUPPLIER CODE:		
			V4V792		
			SPECIFICATION NUMBER:		
			S242T403-204		
			ELECTRICAL EQUIP NUMBER:		
			N10024		
			COMPONENT MAINT MANUAL REF:		
			34-22-74		
			FOR BREAKDOWN SEE:		
			34-22-05-01B		

MISSING ITEM NUMBERS NOT APPLICABLE

– ITEM NOT ILLUSTRATED

BOEING PROPRIETARY - Copyright © - Unpublished Work - See title page for details.

FIG ITEM	PART NUMBER	1 2 3 4 5 6 7 NOMENCLATURE	EFFECT FROM TO	UNITS PER ASSY
10				
50	622-6006-002	.ANNUNCIATOR ASSY-RADIO MAGNETIC IND BRG SUPPLIER CODE: V4V792 SPECIFICATION NUMBER: S242T403-401 ELECTRICAL EQUIP NUMBER: N10025 COMPONENT MAINT MANUAL REF: 34-22-77 FOR BREAKDOWN SEE: 34-22-07-01	504903	1
55	A3615710067	.INDICATOR-STBY AIRSPEED SUPPLIER CODE: V89944 SPECIFICATION NUMBER: S231T112-1 ELECTRICAL EQUIP NUMBER: N00022 COMPONENT MAINT MANUAL REF: 34-13-03	101102 108120	RF
55	A3615710071	.INDICATOR-STBY AIRSPEED SUPPLIER CODE: V89944 SPECIFICATION NUMBER: S231T112-6 MISCELLANEOUS DATA: A3615710071 MAY REPLACE A3615710070 SUBJECT TO CUSTOMER PREFERENCE ELECTRICAL EQUIP NUMBER: N00022 COMPONENT MAINT MANUAL REF: 34-13-12 FOR BREAKDOWN SEE: 34-13-05-01	504903	RF
60	A4619710001	.INDICATOR ASSY-STBY ALTM SUPPLIER CODE: V89944 SPECIFICATION NUMBER: S231T111-1 ELECTRICAL EQUIP NUMBER: N00023 COMPONENT MAINT MANUAL REF: 34-13-06 FOR BREAKDOWN SEE: 34-13-06-01	101102 108120	RF

MISSING ITEM NUMBERS NOT APPLICABLE

– ITEM NOT ILLUSTRATED

BOEING PROPRIETARY - Copyright © - Unpublished Work - See title page for details.

FIG ITEM	PART NUMBER	1 2 3 4 5 6 7 NOMENCLATURE	EFFECT FROM TO	UNITS PER ASSY
10				
60	LK35-2	.INDICATOR ASSY-STBY ALTM SUPPLIER CODE: VS4276 SPECIFICATION NUMBER: S231T113-2 ELECTRICAL EQUIP NUMBER: N00023 COMPONENT MAINT MANUAL REF: 34-13-02 FOR BREAKDOWN SEE: 34-13-06-01	101102 108120	RF
60	LK35-9	.INDICATOR ASSY-STBY ALTM SUPPLIER CODE: VS4276 SPECIFICATION NUMBER: S231T113-7 ELECTRICAL EQUIP NUMBER: N00023 COMPONENT MAINT MANUAL REF: 34-13-02 QUALIFIED I/W DATA: LK35-9 I/W LK35-1 SUBJECT TO CUSTOMER PREFERENCE OF RANGE LIMIT FOR THE BARO CORRECTION RESOLVER OUTPUT. FOR BREAKDOWN SEE: 34-13-06-01	504903	RF
65	404EED1-1	.INDICATOR ASSY-STBY ENG SUPPLIER CODE: VK5294 SPECIFICATION NUMBER: S231N001-7 ELECTRICAL EQUIP NUMBER: N10016 COMPONENT MAINT MANUAL REF: 77-40-03 FOR BREAKDOWN SEE: 77-41-01-01	101102 108120 504903	RF

MISSING ITEM NUMBERS NOT APPLICABLE

— ITEM NOT ILLUSTRATED

BOEING PROPRIETARY - Copyright © - Unpublished Work - See title page for details.

FIG ITEM	PART NUMBER	1 2 3 4 5 6 7 NOMENCLATURE	EFFECT FROM TO	UNITS PER ASSY
10				
80	233N2221-301	.MODULE ASSY-	101102	1
		COMPONENT MAINT MANUAL REF:	108120	
		31-11-48		
		FOR OTHER SYS DETAILS SEE:		
		11-31-01-37		
		22-14-01-03		
		22-34-51-02		
		29-21-55-02		
		31-25-01-03		
		31-41-52-02		
		31-51-52-02		
		32-41-52-02		
		32-42-55-03		
		33-13-57-01A		
		33-16-52-03		
		34-13-01-02		
		34-13-05-01		
		34-13-06-01		
		34-16-51-03		
		34-22-06-01		
		34-24-01-03		
		34-32-00-02		
		34-46-51-02		
		34-61-01-07		
		77-41-01-01		
		79-33-51-05		

MISSING ITEM NUMBERS NOT APPLICABLE

— ITEM NOT ILLUSTRATED

BOEING PROPRIETARY - Copyright © - Unpublished Work - See title page for details.

FIG ITEM	PART NUMBER	1 2 3 4 5 6 7 NOMENCLATURE	EFFECT FROM TO	UNITS PER ASSY
10				
80	233N2221-317	.MODULE ASSY-	505505	1
		COMPONENT MAINT MANUAL REF:	507903	
		31-11-48		
		FOR OTHER SYS DETAILS SEE:		
		11-31-01-37		
		22-14-01-03		
		22-34-51-02		
		29-21-55-02		
		31-25-01-03		
		31-41-52-02		
		31-51-52-02		
		32-41-52-02		
		32-42-55-03		
		33-13-57-01A		
		33-16-52-03		
		34-13-01-02		
		34-13-05-01		
		34-13-06-01		
		34-16-51-02		
		34-16-51-03		
		34-22-06-01		
		34-24-01-03		
		34-32-00-02		
		34-46-51-02		
		34-61-01-07		
		77-41-01-01		
		79-33-51-05		

MISSING ITEM NUMBERS NOT APPLICABLE

— ITEM NOT ILLUSTRATED

BOEING PROPRIETARY - Copyright © - Unpublished Work - See title page for details.

FIG ITEM	PART NUMBER	1 2 3 4 5 6 7 NOMENCLATURE	EFFECT FROM TO	UNITS PER ASSY
10				
80	RR92002-134A101	.MODULE ASSY-	504504	1
		POST RAPID REVISION:	506506	
		RR92002-134A		
		FOR OTHER SYS DETAILS SEE:		
		11-31-01-37		
		22-14-01-03		
		22-34-51-02		
		29-21-55-02		
		31-25-01-03		
		31-41-52-02		
		31-51-52-02		
		32-41-52-02		
		32-42-55-03		
		33-13-57-01A		
		33-16-52-03		
		34-13-01-02		
		34-13-05-01		
		34-13-06-01		
		34-16-51-02		
		34-16-51-03		
		34-22-06-01		
		34-24-01-03		
		34-32-00-02		
		34-46-51-02		
		34-61-01-07		
		77-41-01-01		
		79-33-51-05		

MISSING ITEM NUMBERS NOT APPLICABLE

— ITEM NOT ILLUSTRATED

BOEING PROPRIETARY - Copyright © - Unpublished Work - See title page for details.

FIG ITEM	PART NUMBER	1 2 3 4 5 6 7 NOMENCLATURE	EFFECT FROM TO	UNITS PER ASSY
10				
80	233N2221-326	.MODULE ASSY-	101102	1
		COMPONENT MAINT MANUAL REF:	108120	
		31-11-48		
		FOR OTHER SYS DETAILS SEE:		
		11-31-01-37		
		22-14-01-03		
		22-34-51-02		
		29-21-55-02		
		31-25-01-03		
		31-41-52-02		
		31-51-52-02		
		32-41-52-02		
		32-42-55-03		
		33-13-57-01A		
		33-16-52-03		
		34-13-01-02		
		34-13-05-01		
		34-13-06-01		
		34-16-51-03		
		34-22-06-01		
		34-24-01-03		
		34-32-00-02		
		34-46-51-02		
		34-61-01-07		
		77-41-01-01		
		79-33-51-05		

MISSING ITEM NUMBERS NOT APPLICABLE

— ITEM NOT ILLUSTRATED

BOEING PROPRIETARY - Copyright © - Unpublished Work - See title page for details.

FIG ITEM	PART NUMBER	1 2 3 4 5 6 7 NOMENCLATURE	EFFECT FROM TO	UNITS PER ASSY
10				
80	233N2221-320	.MODULE ASSY-	101102	1
		COMPONENT MAINT MANUAL REF:	108120	
		31-11-48		
		FOR OTHER SYS DETAILS SEE:		
		11-31-01-37		
		22-14-01-03		
		22-34-51-02		
		29-21-55-02		
		31-25-01-03		
		31-41-52-02		
		31-51-52-02		
		32-41-52-02		
		32-42-55-03		
		33-13-57-01A		
		33-16-52-03		
		34-13-01-02		
		34-13-05-01		
		34-13-06-01		
		34-16-51-03		
		34-22-06-01		
		34-24-01-03		
		34-32-00-02		
		34-46-51-02		
		34-61-01-07		
		77-41-01-01		
		79-33-51-05		

MISSING ITEM NUMBERS NOT APPLICABLE

— ITEM NOT ILLUSTRATED

BOEING PROPRIETARY - Copyright © - Unpublished Work - See title page for details.

FIG ITEM	PART NUMBER	1 2 3 4 5 6 7 NOMENCLATURE	EFFECT FROM TO	UNITS PER ASSY
10				
80	233N2221-328	.MODULE ASSY-	101102	1
		COMPONENT MAINT MANUAL REF:	108120	
		31-11-48		
		FOR OTHER SYS DETAILS SEE:		
		11-31-01-37		
		22-14-01-03		
		22-34-51-02		
		29-21-55-02		
		31-25-01-03		
		31-41-52-02		
		31-51-52-02		
		32-41-52-02		
		32-42-55-03		
		33-13-57-01A		
		33-16-52-03		
		34-13-01-02		
		34-13-05-01		
		34-13-06-01		
		34-16-51-03		
		34-22-06-01		
		34-24-01-03		
		34-32-00-02		
		34-46-51-02		
		34-61-01-07		
		77-41-01-01		
		79-33-51-05		
- 85	233N2221-51	..MODULE ASSY-	101102	RF
		USED ON:	108120	
		233N2221-301		
- 85	233N2221-74	..MODULE ASSY	504903	RF
90	BAC27NEL0339	...DECAL-	101102	1
		PLACARD CONTENT:	108120	
		AP0103	504903	
95	BAC27NEL0187	...DECAL-	101102	1
		PLACARD CONTENT:	108120	
		1	504903	
100	BAC27NEL0188	...DECAL-	101102	1
		PLACARD CONTENT:	108120	
		2	504903	
105	BAC27NEL0189	...DECAL-	101102	1
		PLACARD CONTENT:	108120	
		3	504903	
110	BAC27NEL0190	...DECAL-	101102	1
		PLACARD CONTENT:	108120	
		4	504903	
115	BAC27NEL0191	...DECAL-	101102	1
		PLACARD CONTENT:	108120	
		5	504903	

MISSING ITEM NUMBERS NOT APPLICABLE

- ITEM NOT ILLUSTRATED

BOEING PROPRIETARY - Copyright © - Unpublished Work - See title page for details.

FIG ITEM	PART NUMBER	1 2 3 4 5 6 7 NOMENCLATURE	EFFECT FROM TO	UNITS PER ASSY
10				
120	BAC27NFDE0070	...DECAL-	101102	2
		PLACARD CONTENT:	108120	
		TB0064	504903	
125	BAC27NFDE0085	...DECAL-	101102	1
		PLACARD CONTENT:	108120	
		M01174	504903	
135	BAC27TEX0384	...DECAL	101102	2
			108120	
			504903	
155	233T2220-10	...CUP ASSY	101102	3
			108120	
			504903	
157	233T2220-12	....SEAL	101102	3
			108120	
			504903	
165	BACS21Y35R	...STUD ASSY-	504903	1
165	BACS21EE35R	...STUD ASSY-	101102	1
			108120	
170	BACS21Y37R	...STUD ASSY-	504903	1
170	BACS21EE37R	...STUD ASSY-	101102	1
			108120	
175	BACS21Y33R	...STUD ASSY-	504903	1
175	BACS21EE33R	...STUD ASSY-	101102	1
			108120	
180	BACS21Y36R	...STUD ASSY-	504903	1
180	BACS21EE36R	...STUD ASSY-	101102	1
			108120	
185	1127700	...WASHER	101102	4
		SUPPLIER CODE:	108120	
		V60119	504903	
		SPECIFICATION NUMBER:		
		BACW10X4		
		OPTIONAL PART:		
		2600LW		
		V71286		
225	012001-101	...SPACER-CRIMP	101102	14
		SUPPLIER CODE:	108120	
		V28277		
235	012001-101	...SPACER-CRIMP	504903	16
		SUPPLIER CODE:		
		V28277		
240	350-1	...SPACER-	101102	18
		SUPPLIER CODE:	108120	
		V28277		
255	350-1	...SPACER-	504903	20
		SUPPLIER CODE:		
		V28277		

MISSING ITEM NUMBERS NOT APPLICABLE

– ITEM NOT ILLUSTRATED

BOEING PROPRIETARY - Copyright © - Unpublished Work - See title page for details.

FIG ITEM	PART NUMBER	1 2 3 4 5 6 7 NOMENCLATURE	EFFECT FROM TO	UNITS PER ASSY
10				
260	VNS1924CA1-8	...STUD-	101102	1
		SUPPLIER CODE:	108120	
		V5M902	504903	
		SPECIFICATION NUMBER:		
		BACS53B1EA1		
		OPTIONAL PART:		
		VNS1924CA3-1-8		
		V92215		
		BACS53B1EA2		
260	VNS1924CA2-8	...STUD-	101102	1
		SUPPLIER CODE:	108120	
		V5M902	504903	
		SPECIFICATION NUMBER:		
		BACS53B1EA2		
		OPTIONAL PART:		
		VNS1924CA3-2-8		
		V92215		
		BACS53B1EA1		
262	NAS1149D0316H	...WASHER	101102	1
			108120	
			504903	
263	BRH10C3D	...NUT	101102	1
		SUPPLIER CODE:	108120	
		V52828	504903	
		SPECIFICATION NUMBER:		
		BACN10JC3CD		
		OPTIONAL PART:		
		T6C1032JCD		
		V11815		
		NS202486-02		
		V80539		
		102LH9075-3W		
		V72962		
		H51650-3BAC		
		V15653		
265	233T2218-5	...FOOTREST ASSY	101102	1
			108120	
			504903	
		ATTACHING PARTS		
- 270	NAS514P1032-24	...SCREW	101102	2
			108120	
- 270	MS24693C280	...SCREW	504903	2
		-------*-------		
272	MS21209F1-30	....INSERT	101102	2
			108120	
			504903	
273	233T2218-7	....FOOTREST	101102	1
			108120	
			504903	

MISSING ITEM NUMBERS NOT APPLICABLE

- ITEM NOT ILLUSTRATED

BOEING PROPRIETARY - Copyright © - Unpublished Work - See title page for details.

FIG ITEM	PART NUMBER	1 2 3 4 5 6 7 NOMENCLATURE	EFFECT FROM TO	UNITS PER ASSY
10				
275	H21-1	...SPACER	101102	2
		SUPPLIER CODE:	108120	
		V34941	504903	
		SPECIFICATION NUMBER:		
		BACS18AR1		
		OPTIONAL PART:		
		FAB276A		
		V15805		
		YHLZ1C2		
		V09922		
280	BACC49A1	...CLAMP-	504903	4
		SUPPLIER CODE:		
		V09922		
		SPECIFICATION NUMBER:		
		BACC49A1		
		OPTIONAL PART:		
		FAB278		
		V15805		
		H28-1		
		V34941		
		UP103		
		V6E102		
280	H49-1	...CLAMP-	101102	4
		SUPPLIER CODE:	108120	
		V34941		
		SPECIFICATION NUMBER:		
		BACC49A1A		
		OPTIONAL PART:		
		MF104-1		
		V6E102		
285	233N2225-53	...PANEL ASSY-FWD	101102	1
			108120	
285	233N2225-62	...PANEL ASSY-FWD	504903	1
		ATTACHING PARTS		
- 290	NAS514P832-8	...SCREW	101102	6
			108120	
- 290	MS24693C50	...SCREW	504903	6
		-------*-------		
295	GR1003	....NUT-INSERT	504903	6
		SUPPLIER CODE:		
		V0625B		
295	NAS1330A06K106	....NUT-	101102	6
		OPTIONAL PART:	108120	
		GR1003		
		V0625B		

MISSING ITEM NUMBERS NOT APPLICABLE

- ITEM NOT ILLUSTRATED

BOEING PROPRIETARY - Copyright © - Unpublished Work - See title page for details.

FIG ITEM	PART NUMBER	1 2 3 4 5 6 7 NOMENCLATURE	EFFECT FROM TO	UNITS PER ASSY
10				
295	GR1003	....NUT-INSERT SUPPLIER CODE: V0625B OPTIONAL PART: NAS1330A06K106	101102 108120	6
305	233N2225-49	....SHIM	101102 108120 504903	1
310	233N2225-55	....BACKPLATE- ALTERED FROM PART NUMBER: 233N2241-1	101102 108120	1
310	233N2225-64	....BACKPLATE- ALTERED FROM PART NUMBER: 233N2241-1	504903	1
315	233N2225-54	....FRAME ASSY	101102 108120	1
315	233N2225-63	....FRAME ASSY- ALTERED FROM PART NUMBER: 233N2229-1	504903	1
- 500	286N0101-304	WIRE BUNDLE ASSY	101102	RF
- 500	286N0101-314	WIRE BUNDLE ASSY	505505 507903	RF
- 500	286N0101-317	WIRE BUNDLE ASSY	108120	RF
- 500	286N0101-318	WIRE BUNDLE ASSY	504504 506506	RF
505	BACC45FN20-41P6	.CONNECTOR- ELECTRICAL EQUIP NUMBER: D40209J WIRING DIAGRAM REF: 331651	101102 108120 504903	1
510	BACC45FN16-24P8	.CONNECTOR- ELECTRICAL EQUIP NUMBER: D40427J WIRING DIAGRAM REF: 341611	101102 108120 504903	1
515	BACC45FN16-24P6	.CONNECTOR- ELECTRICAL EQUIP NUMBER: D40677J WIRING DIAGRAM REF: 331651	101102 108120 504903	1
- 551	286N0001-357	WIRE BUNDLE ASSY- REWORKED BY ALERT SB: 34A0222	505505 507903	RF
- 551	286N0001-361	WIRE BUNDLE ASSY- REWORKED BY ALERT SB: 34A0222	101101	RF
- 552	286N0001-365	WIRE BUNDLE ASSY- REWORKED BY ALERT SB: 34A0222	102102	RF

MISSING ITEM NUMBERS NOT APPLICABLE

- ITEM NOT ILLUSTRATED

BOEING PROPRIETARY - Copyright © - Unpublished Work - See title page for details.

FIG ITEM	PART NUMBER	1 2 3 4 5 6 7 NOMENCLATURE	EFFECT FROM TO	UNITS PER ASSY
10				
- 552	286N0001-382	WIRE BUNDLE ASSY- REWORKED BY ALERT SB: 34A0222	504504 506506	RF
- 552	286N0001-392	WIRE BUNDLE ASSY- REWORKED BY ALERT SB: 34A0222	108120	RF
560	BACC45FT20D41S6	.CONNECTOR- ELECTRICAL EQUIP NUMBER: D40209P WIRING DIAGRAM REF: 331621	101102 108120 504903	1
565	BACC45FT16D24S8	.CONNECTOR- ELECTRICAL EQUIP NUMBER: D40427P WIRING DIAGRAM REF: 344611	101102 108120 504903	1
570	BACC45FT16A24S6	.CONNECTOR- ELECTRICAL EQUIP NUMBER: D40677P WIRING DIAGRAM REF: 331651	101102 108120 504903	1

MISSING ITEM NUMBERS NOT APPLICABLE

- ITEM NOT ILLUSTRATED

BOEING PROPRIETARY - Copyright © - Unpublished Work - See title page for details.

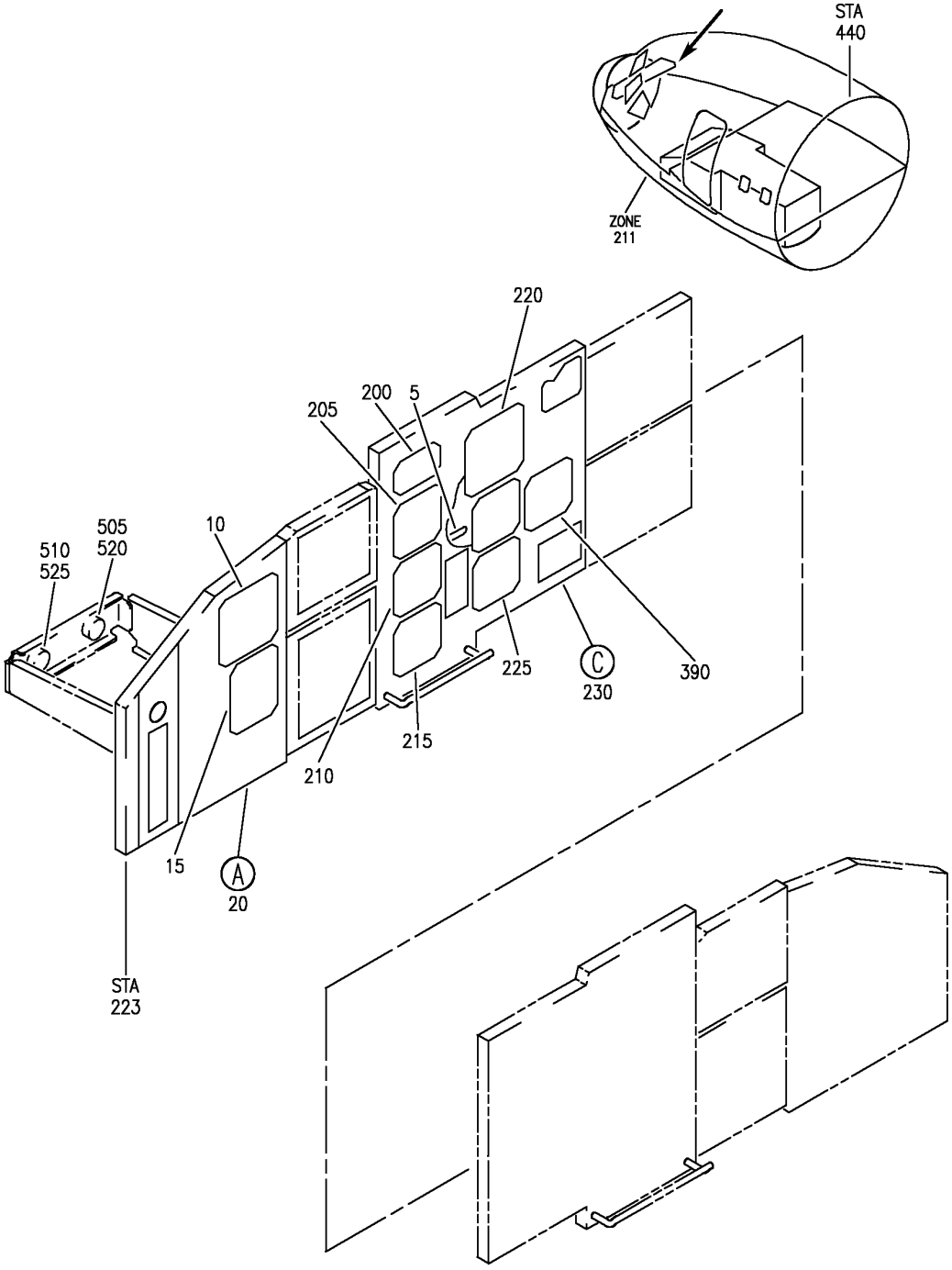

Y 31111119 SHT 1 REV 267

PANEL INSTL-P1-1 AND P1-3 (CAPTAIN'S INSTRUMENT PANEL ONLY)
FIGURE 19 (SHEET 1)

BOEING PROPRIETARY - Copyright © - Unpublished Work - See title page for details.

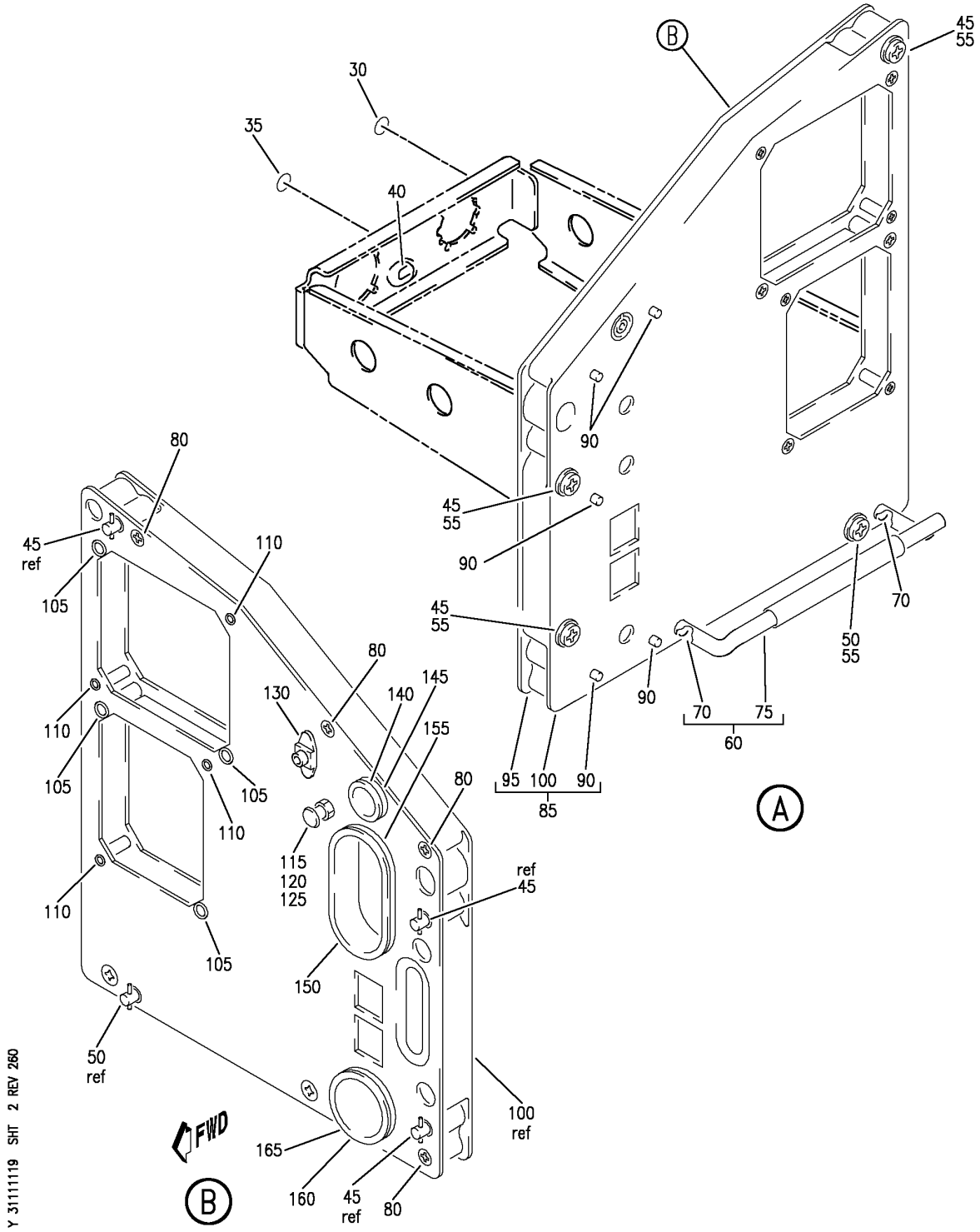

PANEL INSTL-P1-1 AND P1-3 (CAPTAIN'S INSTRUMENT PANEL ONLY)
FIGURE 19 (SHEET 2)

BOEING PROPRIETARY - Copyright © - Unpublished Work - See title page for details.

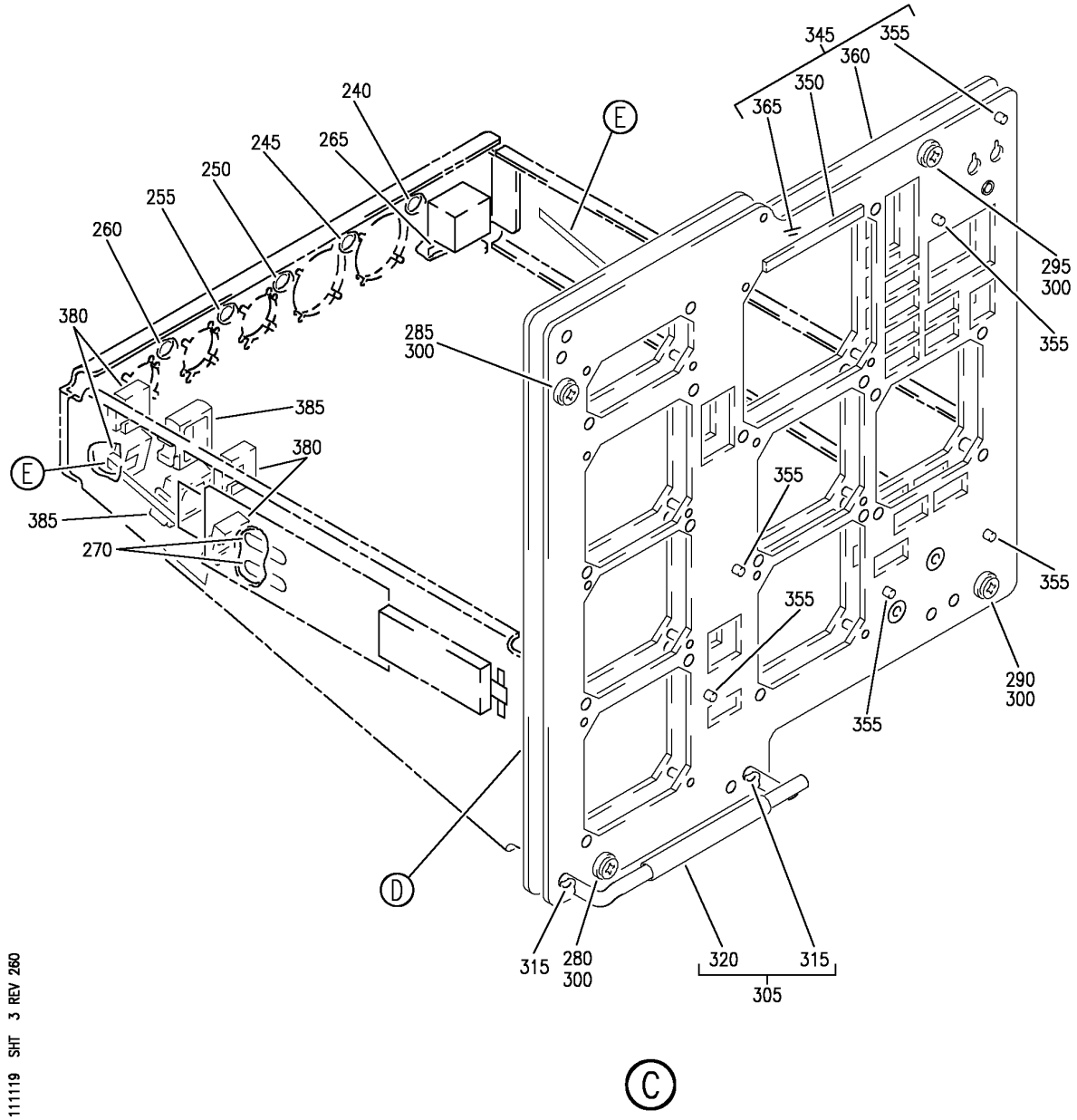

PANEL INSTL-P1-1 AND P1-3 (CAPTAIN'S INSTRUMENT PANEL ONLY)
FIGURE 19 (SHEET 3)

BOEING PROPRIETARY - Copyright © - Unpublished Work - See title page for details.

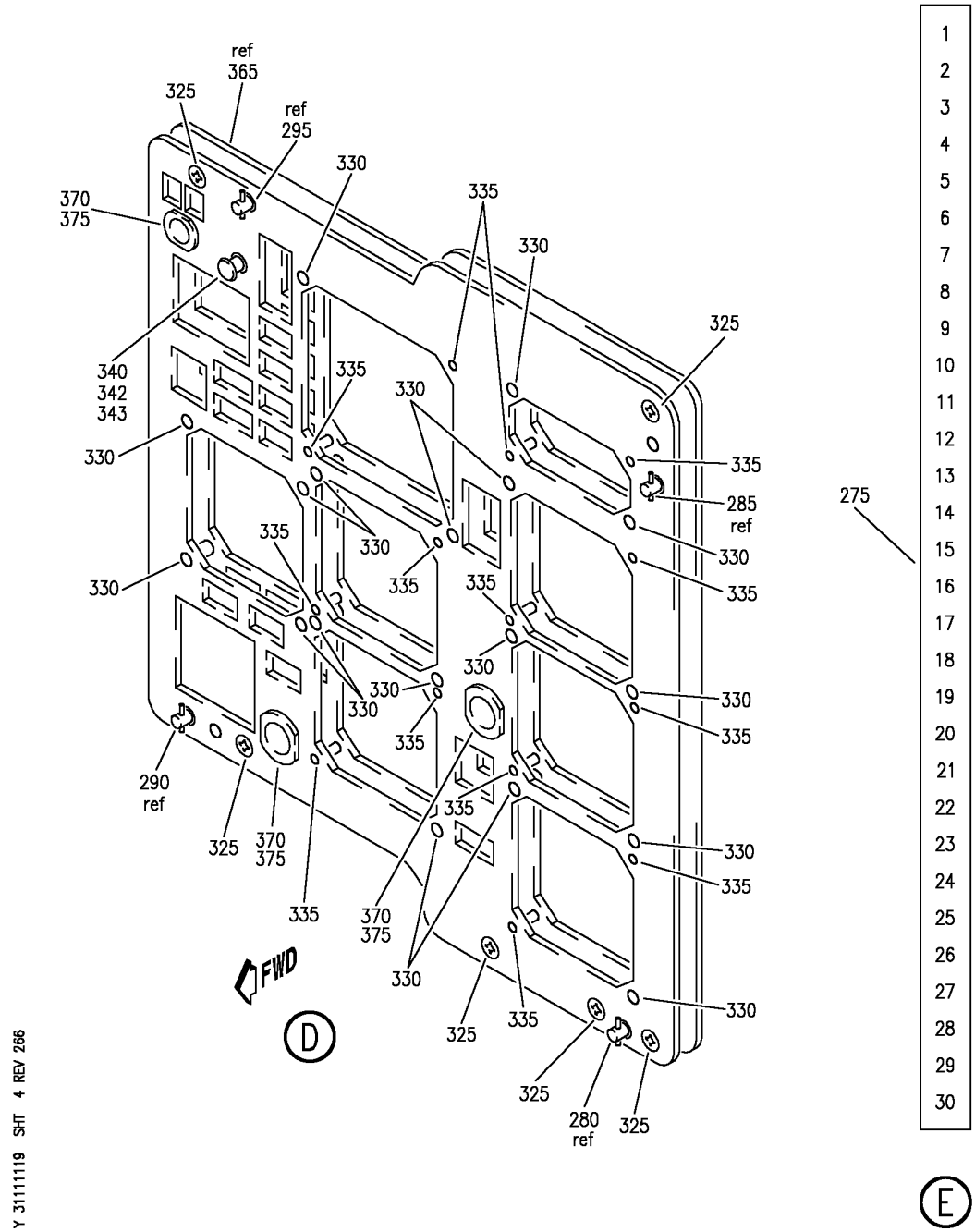

PANEL INSTL-P1-1 AND P1-3 (CAPTAIN'S INSTRUMENT PANEL ONLY)
FIGURE 19 (SHEET 4)

BOEING PROPRIETARY - Copyright © - Unpublished Work - See title page for details.

FIG ITEM	PART NUMBER	1 2 3 4 5 6 7 NOMENCLATURE	EFFECT FROM TO	UNITS PER ASSY
19		PANEL INSTL-P1-1 AND P1-3 (CAPTAIN'S INSTRUMENT PANEL ONLY)	103106	RF

MISSING ITEM NUMBERS NOT APPLICABLE

– ITEM NOT ILLUSTRATED

BOEING PROPRIETARY - Copyright © - Unpublished Work - See title page for details.

FIG ITEM	PART NUMBER	1 2 3 4 5 6 7 NOMENCLATURE	EFFECT FROM TO	UNITS PER ASSY
19				
- 1	MODREF31741	PANEL INSTL-P1-1 AND P1-3 (CAPTAIN'S INSTRUMENT PANEL ONLY) MODULE NUMBER: 233N2103-425 REV A FOR OTHER SYS DETAILS SEE: 11-31-01-38 22-11-02-03 22-14-01-03 22-31-02-01 22-34-51-02 26-17-51-05 27-51-57-03 27-58-00-02 27-81-00-01 29-21-55-02 31-25-01-03 31-41-52-02 31-51-52-02 32-35-52-03 32-41-52-02 32-42-55-03 32-46-00-01 32-61-51-03 33-13-57-01A 33-16-52-03 34-12-01-03 34-13-01-03 34-13-02-01 34-13-05-01 34-13-06-01 34-16-51-03 34-21-02-02 34-22-02-02 34-22-05-01A 34-22-06-01 34-24-01-03 34-32-00-02 34-46-51-02 34-51-02-02 34-57-00-01 34-61-01-07 34-61-02-02 77-41-01-01 79-33-51-05 FOR ADDITIONAL DETAILS SEE: 31-11-16-01 31-11-26-38	103105	1

MISSING ITEM NUMBERS NOT APPLICABLE

– ITEM NOT ILLUSTRATED

BOEING PROPRIETARY - Copyright © - Unpublished Work - See title page for details.

FIG ITEM	PART NUMBER	1 2 3 4 5 6 7 NOMENCLATURE	EFFECT FROM TO	UNITS PER ASSY
19				
- 1	MODREF104335	PANEL INSTL-P1-1 AND P1-3 (CAPTAIN'S INSTRUMENT PANEL ONLY) MODULE NUMBER: 233N2103-425 REV B FOR OTHER SYS DETAILS SEE: 11-31-01-38 22-11-02-03 22-14-01-03 22-31-02-01 22-34-51-02 26-17-51-05 27-51-57-03 27-58-00-02 27-81-00-01 29-21-55-02 31-25-01-03 31-41-52-02 31-51-52-02 32-35-52-03 32-41-52-02 32-42-55-03 32-46-00-01 32-61-51-03 33-13-57-01A 33-16-52-03 34-12-01-03 34-13-01-03 34-13-02-01 34-13-05-01 34-13-06-01 34-16-51-03 34-21-02-02 34-22-02-02 34-22-05-01A 34-22-06-01 34-24-01-03 34-32-00-02 34-46-51-02 34-51-02-02 34-57-00-01 34-61-01-07 34-61-02-02 77-41-01-01 79-33-51-05 FOR ADDITIONAL DETAILS SEE: 31-11-16-01 31-11-26-38	106106	1

MISSING ITEM NUMBERS NOT APPLICABLE

- ITEM NOT ILLUSTRATED

BOEING PROPRIETARY - Copyright © - Unpublished Work - See title page for details.

FIG ITEM	PART NUMBER	1 2 3 4 5 6 7 NOMENCLATURE	EFFECT FROM TO	UNITS PER ASSY
19				
5	BAC27NFDE272	.MARKER- PLACARD CONTENT: N10052	103106	1
10	4039891-906	.INDICATOR-MACH AIRSPEED SUPPLIER CODE: V58960 SPECIFICATION NUMBER: S231T100-4 ELECTRICAL EQUIP NUMBER: N00001 COMPONENT MAINT MANUAL REF: 34-13-09 FOR BREAKDOWN SEE: 34-13-02-01	103106	RF
15	622-5001-109	.INDICATOR ASSY-RDMI SUPPLIER CODE: V4V792 POSITION DATA: L SPECIFICATION NUMBER: S242T403-109 ELECTRICAL EQUIP NUMBER: N00003 COMPONENT MAINT MANUAL REF: 34-22-73 QUALIFIED I/W DATA: S242T403-107 (622-5001-107) RB S242T403-109 (622-5001-109) WITH THE INCORPORATION OF S/B 757-34-0018 AND VENDOR S/B (ROCKWELL COLLINS) RDM1 743-34-10(R1) FOR BREAKDOWN SEE: 34-22-05-01A	103106	RF
20	233N2220-328	.MODULE ASSY-P1-1 COMPONENT MAINT MANUAL REF: 31-11-47 FOR OTHER SYS DETAILS SEE: 33-13-57-01A 34-12-01-03 34-13-02-01 34-21-02-02 34-22-02-02 34-22-05-01A 34-57-00-01 34-61-02-02	103106	1
- 25	233N2220-42	..MODULE ASSY	103106	RF

MISSING ITEM NUMBERS NOT APPLICABLE

- ITEM NOT ILLUSTRATED

BOEING PROPRIETARY - Copyright © - Unpublished Work - See title page for details.

FIG ITEM	PART NUMBER	1 2 3 4 5 6 7 NOMENCLATURE	EFFECT FROM TO	UNITS PER ASSY
19				
30	BAC27NEL0187	...DECAL-	103106	1
		PLACARD CONTENT:		
		1		
35	BAC27NEL0188	...DECAL-	103106	1
		PLACARD CONTENT:		
		2		
40	BAC27NEL0338	...DECAL-	103106	1
		PLACARD CONTENT:		
		AP0101		
45	BACS21EE34R	...STUD ASSY	103106	3
50	BACS21EE33R	...STUD ASSY	103106	1
55	1127700	...WASHER	103106	4
		SUPPLIER CODE:		
		V60119		
		SPECIFICATION NUMBER:		
		BACW10X4		
		OPTIONAL PART:		
		2600LW		
		V71286		
60	233T2218-2	...FOOTREST ASSY	103106	1
		ATTACHING PARTS		
- 65	MS24693C280	...SCREW	103106	2
		-------*-------		
70	MS21209F1-30	....INSERT	103106	2
75	233T2218-4	....FOOTREST	103106	1
80	MS24693C50	...SCREW	103106	4
85	233N2224-72	...PANEL ASSY-FWD	103106	1
90	GR1003	....NUT-INSERT	103106	5
		SUPPLIER CODE:		
		V0625B		
		OPTIONAL PART:		
		NAS1330A06K106		
90	NAS1330A06K106	....NUT-	103106	5
		OPTIONAL PART:		
		GR1003		
		V0625B		
95	233N2224-44	....BACKPLATE	103106	1
100	233N2224-73	....FRAME ASSY	103106	1
105	350-1	...SPACER-	103106	4
		SUPPLIER CODE:		
		V28277		
110	012001-101	...SPACER-CRIMP	103106	4
		SUPPLIER CODE:		
		V28277		

MISSING ITEM NUMBERS NOT APPLICABLE

- ITEM NOT ILLUSTRATED

BOEING PROPRIETARY - Copyright © - Unpublished Work - See title page for details.

FIG ITEM	PART NUMBER	1 2 3 4 5 6 7 NOMENCLATURE	EFFECT FROM TO	UNITS PER ASSY
19				
115	VNS1924CA2-8	...STUD	103106	1
		SUPPLIER CODE:		
		V5M902		
		SPECIFICATION NUMBER:		
		BACS53B1EA2		
		OPTIONAL PART:		
		VNS1924CA3-2-8		
		V92215		
120	NAS1149D0316H	...WASHER	103106	1
125	BRH10C3D	...NUT	103106	1
		SUPPLIER CODE:		
		V52828		
		SPECIFICATION NUMBER:		
		BACN10JC3CD		
		OPTIONAL PART:		
		T6C1032JCD		
		V11815		
		NS202486-02		
		V80539		
		102LH9075-3W		
		V72962		
		H51650-3BAC		
		V15653		
130	WSI4-22	...NUT	103106	1
		SUPPLIER CODE:		
		V04169		
		SPECIFICATION NUMBER:		
		BACN10TL3-22		
		ATTACHING PARTS		
- 135	BACR15BB3ADC	...RIVET-	103106	2
		SIZE DETERMINED ON INSTL.		
		-------*-------		
140	233T2220-4	...CUP ASSY	103106	1
145	233T2220-6	....SEAL	103106	1
150	233T2220-33	...CUP ASSY	103106	1
155	233T2220-35	....SEAL	103106	1
160	233T2220-1	...CUP ASSY	103106	1
165	233T2220-3	....SEAL	103106	1

MISSING ITEM NUMBERS NOT APPLICABLE

- ITEM NOT ILLUSTRATED

BOEING PROPRIETARY - Copyright © - Unpublished Work - See title page for details.

FIG ITEM	PART NUMBER	1 2 3 4 5 6 7 NOMENCLATURE	EFFECT FROM TO	UNITS PER ASSY
19				
200	622-5374-002	.INDICATOR ASSY-AUTOLAND STATUS SUPPLIER CODE: V4V792 SPECIFICATION NUMBER: S241T120-1 ELECTRICAL EQUIP NUMBER: N00070 COMPONENT MAINT MANUAL REF: 22-14-70 FOR BREAKDOWN SEE: 22-14-01-03	103106	RF
205	4039892-904	.INDICATOR ASSY-ALTM SUPPLIER CODE: V58960 SPECIFICATION NUMBER: S231T101-1 ELECTRICAL EQUIP NUMBER: N00008 COMPONENT MAINT MANUAL REF: 34-13-08 FOR BREAKDOWN SEE: 34-13-01-03	103106	RF
210	4039893-902	.INDICATOR-VERT SPEED SUPPLIER CODE: V58960 POSITION DATA: L SPECIFICATION NUMBER: S231T102-1 ELECTRICAL EQUIP NUMBER: N00009 COMPONENT MAINT MANUAL REF: 34-13-07 FOR BREAKDOWN SEE: 34-22-06-01	103106	RF

MISSING ITEM NUMBERS NOT APPLICABLE

– ITEM NOT ILLUSTRATED

BOEING PROPRIETARY - Copyright © - Unpublished Work - See title page for details.

	FIG ITEM	PART NUMBER	1 2 3 4 5 6 7 NOMENCLATURE	EFFECT FROM TO	UNITS PER ASSY
	19				
R	215	2610-08-1	.CLOCK ASSY-	103106	RF
R			SUPPLIER CODE:		
R			V52013		
R			FUNCTIONAL DESCRIPTION:		
R			DIGITAL ELECTRONIC		
R			CHRONOMETER, SHOWS		
R			ELAPSED TIME,		
R			CHRONOGRAPH TIME, DATE		
R			AND GREENWICH MEAN TIME.		
R			SPECIFICATION NUMBER:		
R			60B00303-107		
R			ELECTRICAL EQUIP NUMBER:		
R			N00002		
R			COMPONENT MAINT MANUAL REF:		
R			31-21-08		
R			QUALIFIED I/W DATA:		
R			2610-08-1(60B00303-107)		
R			I/W		
R			65806-002-1(S231T120-1)		
R			IN SHIPSETS, FOR ALL FMC		
R			EXCEPT S242T102-451 WITH		
R			S/W PS4052970-95X, WHERE		
R			X CAN BE ANY VALUE, AND		
R			S242T102-455.		
R			65807-050-1 AND		
R			2610-08-1 ARE		
R			INTERCHANGEABLE AS A		
R			SET ONLY		
R			FOR BREAKDOWN SEE:		
R			31-25-01-03		
	220	233T2232-4	.PLATE-COVER	103105	1
	220	233T2232-6	.PLATE-COVER	106106	1
	225	233T2232-2	.PLATE-COVER	103106	1

MISSING ITEM NUMBERS NOT APPLICABLE

– ITEM NOT ILLUSTRATED

BOEING PROPRIETARY - Copyright © - Unpublished Work - See title page for details.

FIG ITEM	PART NUMBER	1 2 3 4 5 6 7 NOMENCLATURE	EFFECT FROM TO	UNITS PER ASSY
19				
230	233N2221-325	.MODULE ASSY-P1-3 COMPONENT MAINT MANUAL REF: 31-11-48 FOR OTHER SYS DETAILS SEE: 11-31-01-38 22-14-01-03 22-34-51-02 29-21-55-02 31-25-01-03 31-41-52-02 31-51-52-02 32-41-52-02 32-42-55-03 33-13-57-01A 33-16-52-03 34-13-01-03 34-13-05-01 34-13-06-01 34-16-51-03 34-22-06-01 34-24-01-03 34-32-00-02 34-46-51-02 34-61-01-07 77-41-01-01 79-33-51-05	103106	1
- 235	233N2221-81	..MODULE ASSY	103106	RF
240	BAC27NEL0187	...DECAL- PLACARD CONTENT: 1	103106	1
245	BAC27NEL0188	...DECAL- PLACARD CONTENT: 2	103106	1
250	BAC27NEL0189	...DECAL- PLACARD CONTENT: 3	103106	1
255	BAC27NEL0190	...DECAL- PLACARD CONTENT: 4	103106	1
260	BAC27NEL0191	...DECAL- PLACARD CONTENT: 5	103106	1
265	BAC27NEL0339	...DECAL- PLACARD CONTENT: AP0103	103106	1
270	BAC27NFDE0070	...DECAL- PLACARD CONTENT: TB0064	103106	2
275	BAC27TEX0384	...DECAL	103106	2

MISSING ITEM NUMBERS NOT APPLICABLE

- ITEM NOT ILLUSTRATED

BOEING PROPRIETARY - Copyright © - Unpublished Work - See title page for details.

FIG ITEM	PART NUMBER	1 2 3 4 5 6 7 NOMENCLATURE	EFFECT FROM TO	UNITS PER ASSY
19				
280	BACS21EE33R	...STUD ASSY	103106	1
285	BACS21EE35R	...STUD ASSY	103106	1
290	BACS21EE36R	...STUD ASSY	103106	1
295	BACS21EE37R	...STUD ASSY	103106	1
300	1127700	...WASHER	103106	4
		SUPPLIER CODE:		
		V60119		
		SPECIFICATION NUMBER:		
		BACW10X4		
		OPTIONAL PART:		
		2600LW		
		V71286		
305	233T2218-5	...FOOTREST ASSY	103106	1
		ATTACHING PARTS		
- 310	NAS514P1032-24	...SCREW	103106	2
		-------*-------		
315	MS21209F1-30	....INSERT	103106	2
320	233T2218-7	....FOOTREST	103106	1
325	NAS514P832-8	...SCREW	103106	6
330	350-1	...SPACER-	103106	18
		SUPPLIER CODE:		
		V28277		
335	012001-101	...SPACER-CRIMP	103106	14
		SUPPLIER CODE:		
		V28277		
340	VNS1924CA1-8	...STUD-	103106	1
		SUPPLIER CODE:		
		V5M902		
		SPECIFICATION NUMBER:		
		BACS53B1EA1		
		OPTIONAL PART:		
		VNS1924CA3-1-8		
		V92215		
		BACS53B1EA2		
340	VNS1924CA2-8	...STUD-	103106	1
		SUPPLIER CODE:		
		V5M902		
		SPECIFICATION NUMBER:		
		BACS53B1EA2		
		OPTIONAL PART:		
		VNS1924CA3-2-8		
		V92215		
		BACS53B1EA1		
342	NAS1149D0316H	...WASHER	103106	1

MISSING ITEM NUMBERS NOT APPLICABLE

- ITEM NOT ILLUSTRATED

BOEING PROPRIETARY - Copyright © - Unpublished Work - See title page for details.

FIG ITEM	PART NUMBER	1 2 3 4 5 6 7 NOMENCLATURE	EFFECT FROM TO	UNITS PER ASSY
19				
343	BRH10C3D	...NUT	103106	1
		SUPPLIER CODE:		
		V52828		
		SPECIFICATION NUMBER:		
		BACN10JC3CD		
		OPTIONAL PART:		
		T6C1032JCD		
		V11815		
		NS202486-02		
		V80539		
		102LH9075-3W		
		V72962		
		H51650-3BAC		
		V15653		
345	233N2225-53	...PANEL ASSY-FWD	103106	1
350	233N2225-49	....SHIM	103106	1
355	GR1003	....NUT-INSERT	103106	6
		SUPPLIER CODE:		
		V0625B		
		OPTIONAL PART:		
		NAS1330A06K106		
355	NAS1330A06K106	....NUT-	103106	6
		OPTIONAL PART:		
		GR1003		
		V0625B		
360	233N2225-55	....BACKPLATE-	103106	1
		ALTERED FROM PART NUMBER:		
		233N2241-1		
365	233N2225-54	....FRAME ASSY	103106	1
370	233T2220-10	...CUP ASSY	103106	3
375	233T2220-12	....SEAL	103106	1
380	H49-1	...CLAMP	103106	4
		SUPPLIER CODE:		
		V34941		
		SPECIFICATION NUMBER:		
		BACC49A1A		
		OPTIONAL PART:		
		MF104-1		
		V6E102		
385	H21-1	...SPACER	103106	2
		SUPPLIER CODE:		
		V34941		
		SPECIFICATION NUMBER:		
		BACS18AR1		
		OPTIONAL PART:		
		FAB276A		
		V15805		
		YHLZ1C2		
		V09922		

MISSING ITEM NUMBERS NOT APPLICABLE

– ITEM NOT ILLUSTRATED

BOEING PROPRIETARY - Copyright © - Unpublished Work - See title page for details.

FIG ITEM	PART NUMBER	1 2 3 4 5 6 7 NOMENCLATURE	EFFECT FROM TO	UNITS PER ASSY
19				
390	404EED1-1	.INDICATOR ASSY-STBY ENG SUPPLIER CODE: VK5294 SPECIFICATION NUMBER: S231N001-7 ELECTRICAL EQUIP NUMBER: N10016 COMPONENT MAINT MANUAL REF: 77-40-03 FOR BREAKDOWN SEE: 77-41-01-01	103106	RF
- 500	286N0017-701	WIRE BUNDLE ASSY	103106	RF
505	BACC45FN16-24P	.CONNECTOR- ELECTRICAL EQUIP NUMBER: D40281J WIRING DIAGRAM REF: 342291	103106	1
510	BACC45FN22-55P7	.CONNECTOR- ELECTRICAL EQUIP NUMBER: D40671J WIRING DIAGRAM REF: 342291	103106	1
R - 515	286N0001-709	WIRE BUNDLE ASSY	103106	RF
520	BACC45FT16A24S	.CONNECTOR- ELECTRICAL EQUIP NUMBER: D40281P WIRING DIAGRAM REF: 342291	103106	1
525	BACC45FT22A55S7	.CONNECTOR- ELECTRICAL EQUIP NUMBER: D40671P WIRING DIAGRAM REF: 342291	103106	1

MISSING ITEM NUMBERS NOT APPLICABLE

- ITEM NOT ILLUSTRATED

BOEING PROPRIETARY - Copyright © - Unpublished Work - See title page for details.

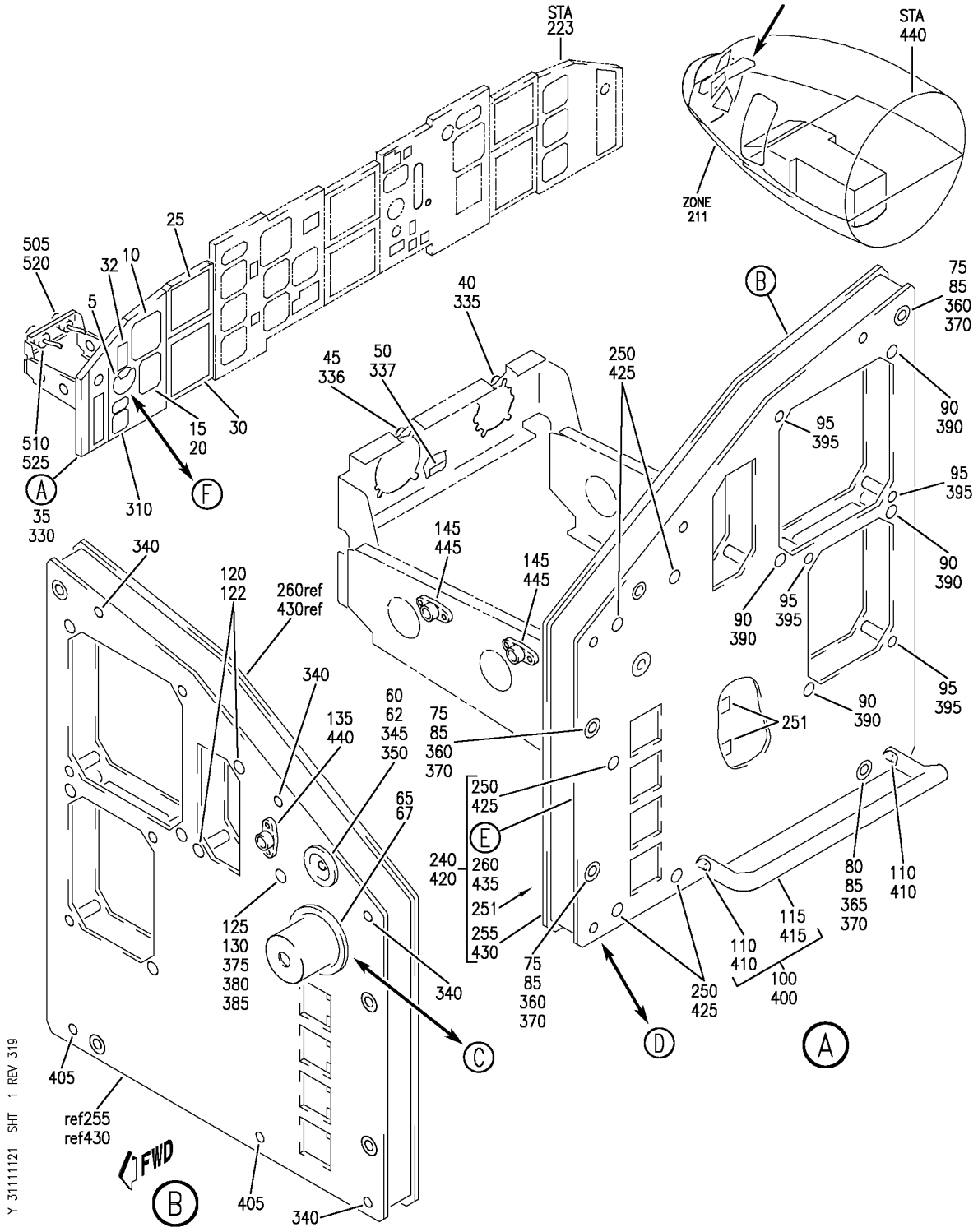

PANEL INSTL-P1-1 (CAPTAIN'S INSTRUMENT PANEL ONLY)
FIGURE 21 (SHEET 1)

BOEING PROPRIETARY - Copyright © - Unpublished Work - See title page for details.

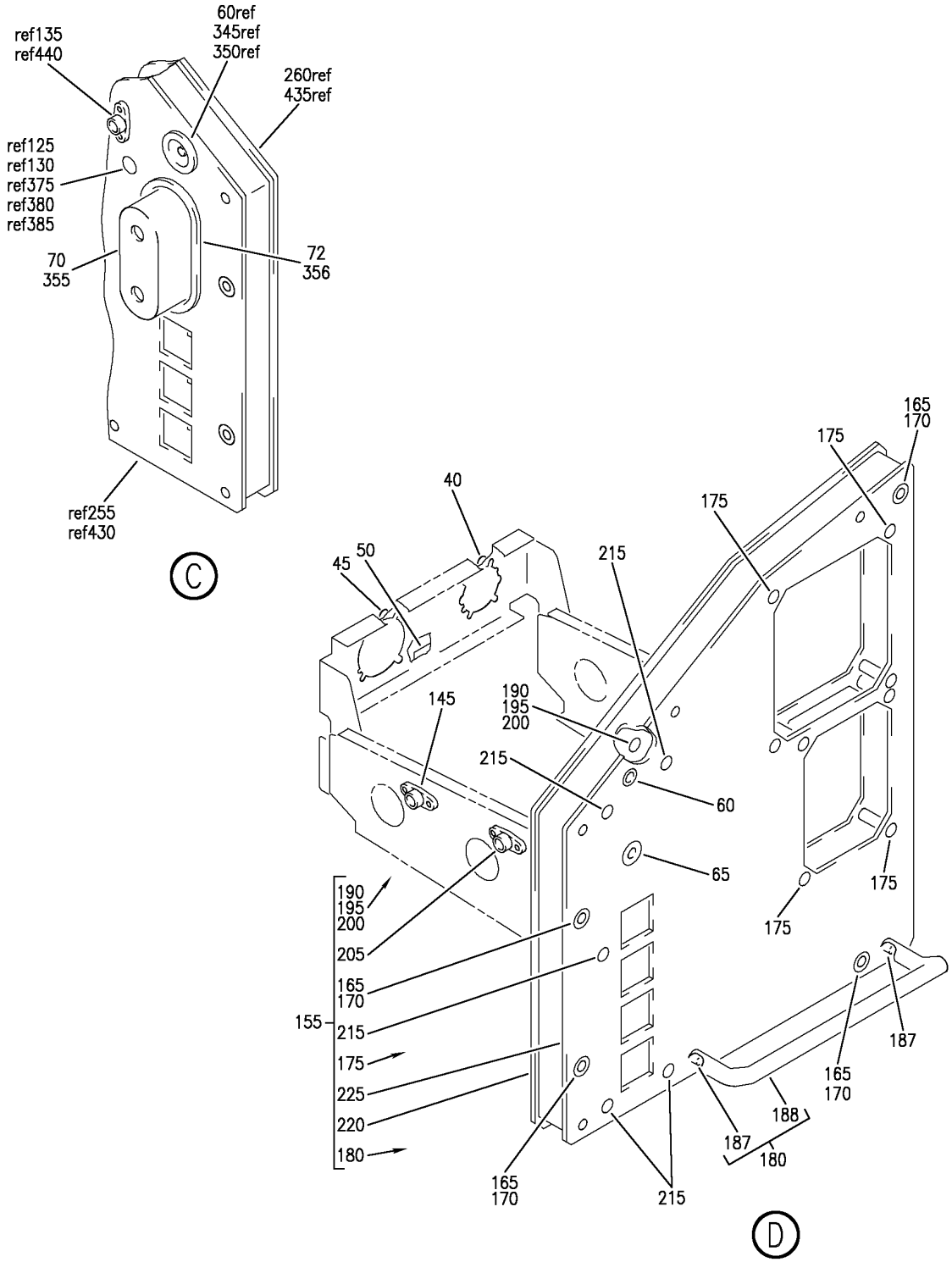

PANEL INSTL-P1-1 (CAPTAIN'S INSTRUMENT PANEL ONLY)
FIGURE 21 (SHEET 2)

BOEING PROPRIETARY - Copyright © - Unpublished Work - See title page for details.

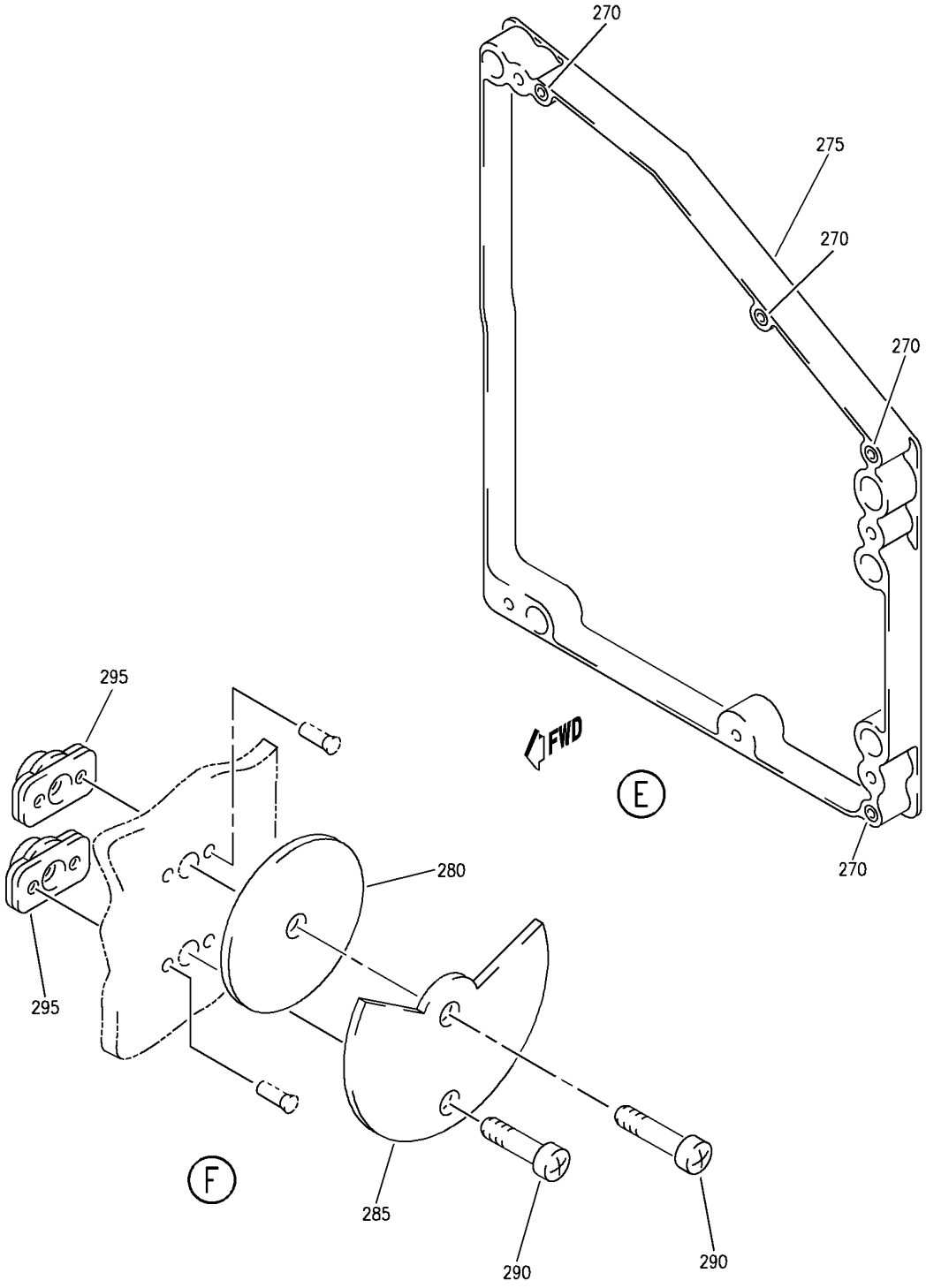

PANEL INSTL-P1-1 (CAPTAIN'S INSTRUMENT PANEL ONLY)
FIGURE 21 (SHEET 3)

BOEING PROPRIETARY - Copyright © - Unpublished Work - See title page for details.

FIG ITEM	PART NUMBER	1 2 3 4 5 6 7 NOMENCLATURE	EFFECT FROM TO	UNITS PER ASSY
21				
		PANEL INSTL-P1-1	002004	
		(CAPTAIN'S INSTRUMENT	006010	
		PANEL ONLY)	107107	
			950999	
- 1	233N2101-1	PANEL INSTL-P1-1	002004	RF
		(CAPTAIN'S INSTRUMENT	006010	
		PANEL ONLY)	107107	
		VARIABLE DRAWING REF:	950999	
		233N2101-5004		
		233N2101-5037		
		233N2101-5039		
		233N2101-5041		
		FOR NHA/OTHER SYS DET SEE:		
		25-10-00-05A		
10	4039891-903	.INDICATOR-MACH AIRSPEED	002004	RF
		SUPPLIER CODE:	006010	
		V58960	107107	
		SPECIFICATION NUMBER:	950999	
		S231T100-1		
		ELECTRICAL EQUIP NUMBER:		
		N00001		
		COMPONENT MAINT MANUAL REF:		
		34-13-09		
		FOR BREAKDOWN SEE:		
		34-13-01-01		
10	4039891-906	.INDICATOR-DMCH AIRSPEED	002004	RF
		SUPPLIER CODE:	006010	
		V58960	107107	
		SPECIFICATION NUMBER:	950999	
		S231T100-4		
		ELECTRICAL EQUIP NUMBER:		
		N00001		
		COMPONENT MAINT MANUAL REF:		
		34-13-09		
		POST SERVICE BULLETIN:		
		31-0114IN1		
		POST SERVICE BULLETIN:		
		4039891-34-007		
		V58960		
		FOR BREAKDOWN SEE:		
		34-13-01-01		

MISSING ITEM NUMBERS NOT APPLICABLE

- ITEM NOT ILLUSTRATED

BOEING PROPRIETARY - Copyright © - Unpublished Work - See title page for details.

FIG ITEM	PART NUMBER	1 2 3 4 5 6 7 NOMENCLATURE	EFFECT FROM TO	UNITS PER ASSY
21				
15	622-5001-109	.INDICATOR ASSY-DME/RADIO MAGNETIC SUPPLIER CODE: V4V792 SPECIFICATION NUMBER: S242T403-109 ELECTRICAL EQUIP NUMBER: N00003 COMPONENT MAINT MANUAL REF: 34-22-73 QUALIFIED I/W DATA: S242T403-107 (622-5001-107) RB S242T403-109 (622-5001-109) WITH THE INCORPORATION OF S/B 57-34-0018 AND VENDOR S/B (ROCKWELL COLLINS) RDM1 743-34-10(R1) FOR BREAKDOWN SEE: 34-22-05-02	002004 006010 107107 950999	RF
25	622-5047-101	.INDICATOR ASSY-ELECT. ATTITUDE DIRECTOR MULTICOLOR DISPLAY UNIT SUPPLIER CODE: V4V792 SPECIFICATION NUMBER: S242T404-502 ELECTRICAL EQUIP NUMBER: N00004 COMPONENT MAINT MANUAL REF: 34-22-71	002004 006010 107107 950999	RF
25	622-5047-100	.INDICATOR ASSY-ELECT. ATTITUDE DIRECTOR MULTICOLOR DISPLAY UNIT SUPPLIER CODE: V4V792 SPECIFICATION NUMBER: S242T404-501 ELECTRICAL EQUIP NUMBER: N00004 COMPONENT MAINT MANUAL REF: 34-22-71	002004 006010 107107 950999	RF

MISSING ITEM NUMBERS NOT APPLICABLE

– ITEM NOT ILLUSTRATED

BOEING PROPRIETARY - Copyright © - Unpublished Work - See title page for details.

FIG ITEM	PART NUMBER	1 2 3 4 5 6 7 NOMENCLATURE	EFFECT FROM TO	UNITS PER ASSY
21				
25	622-7998-003	.INDICATOR ASSY-ELECT. ATTITUDE DIRECTOR MULTICOLOR DISPLAY UNIT SUPPLIER CODE: V4V792 SPECIFICATION NUMBER: S242T404-511 ELECTRICAL EQUIP NUMBER: N00004 COMPONENT MAINT MANUAL REF: 34-22-60 OPTIONAL PART: 622-5046-101 V4V792 FOR BREAKDOWN SEE: 34-22-03-03	002004 006010 107107 950999	RF
30	622-5046-101	.INDICATOR ASSY-ELECT. HORIZ SITUATION MULTICOLOR DISPLAY UNIT SUPPLIER CODE: V4V792 SPECIFICATION NUMBER: S242T404-602 ELECTRICAL EQUIP NUMBER: N00005 COMPONENT MAINT MANUAL REF: 34-22-71 FOR BREAKDOWN SEE: 34-22-04-01	002004 006010 107107 950999	RF
30	622-5046-100	.INDICATOR ASSY-ELECT. HORIZ SITUATION MULTICOLOR DISPLAY UNIT SUPPLIER CODE: V4V792 SPECIFICATION NUMBER: S242T404-601 ELECTRICAL EQUIP NUMBER: N00005 COMPONENT MAINT MANUAL REF: 34-22-71 FOR BREAKDOWN SEE: 34-22-04-01	002004 006010 107107 950999	RF

MISSING ITEM NUMBERS NOT APPLICABLE

– ITEM NOT ILLUSTRATED

BOEING PROPRIETARY - Copyright © - Unpublished Work - See title page for details.

FIG ITEM	PART NUMBER	1 2 3 4 5 6 7 NOMENCLATURE	EFFECT FROM TO	UNITS PER ASSY
21				
30	622-7999-002	.INDICATOR ASSY-ELECT. HORIZ SITUATION MULTICOLOR DISPLAY UNIT SUPPLIER CODE: V4V792 FUNCTIONAL DESCRIPTION: CATHODE RAY TUBE USED AS AN HSI TO DISPLAY INERTIAL REFERENCE SYSTEM GENERATED TRACK AND HEADING AND AS A DISPLAY UNIT FOR THE EICAS SYSTEM SPECIFICATION NUMBER: S242T404-610 ELECTRICAL EQUIP NUMBER: N00005 COMPONENT MAINT MANUAL REF: 34-22-61 FOR BREAKDOWN SEE: 34-22-04-01	002004 006010 107107 950999	RF
30	622-7999-003	.INDICATOR ASSY-ELECT. HORIZ SITUATION MULTICOLOR DISPLAY UNIT SUPPLIER CODE: V4V792 SPECIFICATION NUMBER: S242T404-611 MISCELLANEOUS DATA: 622-7999-013 IS IDENTICAL TO 622-7999-003 EXCEPT THAT THE BEZEL COLOR IS GRAY INSTEAD OF BROWN. 622-7999-013 IS INTERCHANGEABLE WITH 622-7999-003 SUBJECT TO CUSTOMER PREFERENCE SEE SPARES DWG. 242N5002 FOR 757RCHANGEABILITY INTERCHANGEABILITY FOR 767 SEE 242T4213 ELECTRICAL EQUIP NUMBER: N00005 COMPONENT MAINT MANUAL REF: 34-22-60 FOR BREAKDOWN SEE: 34-22-04-01	002004 006010 107107 950999	RF

MISSING ITEM NUMBERS NOT APPLICABLE

– ITEM NOT ILLUSTRATED

BOEING PROPRIETARY - Copyright © - Unpublished Work - See title page for details.

FIG ITEM	PART NUMBER	1 2 3 4 5 6 7 NOMENCLATURE	EFFECT FROM TO	UNITS PER ASSY
21				
35	233N2220-7	.MODULE ASSY- PRE SERVICE BULLETIN: 34-0414 FOR OTHER SYS DETAILS SEE: 33-13-57-01 34-12-01-04 34-13-01-01 34-21-02-04 34-22-00-02 34-22-02-06 34-22-05-01 34-61-02-15	107107	1
35	233N2220-10	.MODULE ASSY- PRE SERVICE BULLETIN: 34-0416 FOR OTHER SYS DETAILS SEE: 33-13-57-01 34-12-01-04 34-13-01-01 34-21-02-04 34-22-00-02 34-22-02-06 34-22-05-01 34-61-02-15	002004 006010 950999	1
40	BAC27NEL0187	..DECAL- PLACARD CONTENT: 1	002004 006010 107107 950999	1
45	BAC27NEL0188	..DECAL- PLACARD CONTENT: 2	002004 006010 107107 950999	1
50	BAC27NEL0338	..DECAL- PLACARD CONTENT: AP0101	002004 006010 107107 950999	1
60	233T2220-4	..CUP ASSY	002004 006010 107107 950999	1
62	233T2220-6	...SEAL	002004 006010 107107 950999	1
65	233T2220-1	..CUP ASSY-	002004 006010 107107 950999	1

MISSING ITEM NUMBERS NOT APPLICABLE

– ITEM NOT ILLUSTRATED

BOEING PROPRIETARY - Copyright © - Unpublished Work - See title page for details.

FIG ITEM	PART NUMBER	1 2 3 4 5 6 7 NOMENCLATURE	EFFECT FROM TO	UNITS PER ASSY
21				
67	233T2220-3	...SEAL	002004 006010 107107 950999	1
75	BACS21Y34R	..STUD ASSY-	002004 006010 107107 950999	3
80	BACS21Y33R	..STUD ASSY-	002004 006010 107107 950999	1
85	1127700	..WASHER SUPPLIER CODE: V60119 SPECIFICATION NUMBER: BACW10X4 OPTIONAL PART: 2600LW V71286	002004 006010 107107 950999	4
90	350-1	..SPACER- SUPPLIER CODE: V28277	002004 006010 107107 950999	4
95	012001-101	..SPACER-CRIMP SUPPLIER CODE: V28277	002004 006010 107107 950999	4
100	233T2218-2	..FOOTREST ASSY	002004 006010 107107 950999	1
		ATTACHING PARTS		
- 105	NAS514P1032-24	..SCREW	002004 006010 107107 950999	2
		-------*-------		
110	MS21209F1-30	...INSERT	002004 006010 107107 950999	2
115	233T2218-4	...FOOTREST	002004 006010 107107 950999	1

MISSING ITEM NUMBERS NOT APPLICABLE

- ITEM NOT ILLUSTRATED

BOEING PROPRIETARY - Copyright © - Unpublished Work - See title page for details.

FIG ITEM	PART NUMBER	1 2 3 4 5 6 7 NOMENCLATURE	EFFECT FROM TO	UNITS PER ASSY
21				
125	VNS1924CA1-8	..STUD-	002004	1
		SUPPLIER CODE:	006010	
		V5M902	107107	
		SPECIFICATION NUMBER:	950999	
		BACS53B1EA1		
		OPTIONAL PART:		
		VNS1924CA3-1-8		
		V92215		
		BACS53B1EA2		
125	VNS1924CA2-8	..STUD-	002004	1
		SUPPLIER CODE:	006010	
		V5M902	107107	
		SPECIFICATION NUMBER:	950999	
		BACS53B1EA2		
		OPTIONAL PART:		
		VNS1924CA3-2-8		
		V92215		
		BACS53B1EA1		
130	BRH10A3	..NUT-	002004	1
		SUPPLIER CODE:	006010	
		V52828	107107	
		SPECIFICATION NUMBER:	950999	
		BACN10JC3		
		OPTIONAL PART:		
		H10-3BAC		
		V15653		
		NS202101-02		
		V80539		
		RMLH9075-3W		
		V72962		
		VN303A02		
		V92215		
		96-02		
		V80539		
		T6S1032J		
		V11815		
135	WSI4-22	..NUT	002004	1
		SUPPLIER CODE:	006010	
		V04169	107107	
		SPECIFICATION NUMBER:	950999	
		BACN10TL3-22		
		ATTACHING PARTS		
- 140	BACR15BB3AD	..RIVET-	002004	2
		SIZE DETERMINED ON INSTL.	006010	
			107107	
			950999	
		-------*-------		

MISSING ITEM NUMBERS NOT APPLICABLE

- ITEM NOT ILLUSTRATED

BOEING PROPRIETARY - Copyright © - Unpublished Work - See title page for details.

FIG ITEM	PART NUMBER	1 2 3 4 5 6 7 NOMENCLATURE	EFFECT FROM TO	UNITS PER ASSY
21				
145	WSI4-6	..NUTPLATE SUPPLIER CODE: V04169 SPECIFICATION NUMBER: BACN10TL3-6 ATTACHING PARTS	002004 006010 107107 950999	2
- 150	BACR15BA3AD	..RIVET- SIZE DETERMINED ON INSTL. -------*-------	002004 006010 107107 950999	4
240	233N2224-7	..PANEL ASSY-FWD ATTACHING PARTS	002004 006010 107107 950999	1
- 245	NAS514P832-8	..SCREW- -------*-------	002004 006010 107107 950999	4
250	GR1003	...NUT-INSERT SUPPLIER CODE: V0625B	002004 006010 107107 950999	5
255	233N2224-9	...BACKPLATE- ALTERED FROM PART NUMBER: 233N2240-1	002004 006010 107107 950999	1
260	233N2224-8	...FRAME ASSY-	002004 006010 107107 950999	1
- 265	233N2228-1	....FRAME ASSY-	002004 006010 107107 950999	1
270	MS21209C0825P	.....INSERT-	002004 006010 107107 950999	4
275	233N2228-2	.....FRAME-	002004 006010 107107 950999	1

MISSING ITEM NUMBERS NOT APPLICABLE

- ITEM NOT ILLUSTRATED

BOEING PROPRIETARY - Copyright © - Unpublished Work - See title page for details.

FIG ITEM	PART NUMBER	1 2 3 4 5 6 7 NOMENCLATURE	EFFECT FROM TO	UNITS PER ASSY
21				
- 320	823N0001-3	.MODULE ASSY-P1-1	009009	1
		POST SERVICE BULLETIN:	107107	
		34-0414		
		34-0416		
		FOR OTHER SYS DETAILS SEE:		
		33-13-57-01		
		34-12-01-04		
		34-13-01-01		
		34-21-02-04		
		34-22-00-02		
		34-22-02-06		
		34-22-05-01		
		34-61-02-15		
330	823N0001-203	..PANEL ASSY-P1-1	009009	1
		POST SERVICE BULLETIN:	107107	
		34-0414		
		34-0416		
335	BAC27NEL0187	...DECAL-	009009	1
		PLACARD CONTENT:	107107	
		1		
336	BAC27NEL0188	...DECAL-	009009	1
		PLACARD CONTENT:	107107	
		2		
337	BAC27NEL0338	...DECAL-	009009	1
		PLACARD CONTENT:	107107	
		AP0101		
340	NAS514P832-8	...SCREW	009009	4
			107107	
345	233T2220-4	...CUP ASSY	009009	1
			107107	
350	800000121-1	...CONNECTOR-PWR	009009	1
		SUPPLIER CODE:	107107	
		V05617		
355	233T2220-33	...CUP ASSY	009009	1
			107107	
356	233T2220-35	....SEAL	009009	1
			107107	
360	BACS21Y34R	...STUD ASSY-	009009	3
		OPTIONAL PART:	107107	
		BACS21EE34R		
360	BACS21EE34R	...STUD ASSY-	009009	3
		OPTIONAL PART:	107107	
		BACS21Y34R		
365	BACS21Y33R	...STUD ASSY-	009009	1
		OPTIONAL PART:	107107	
		BACS21EE33R		
365	BACS21EE33R	...STUD ASSY-	009009	1
		OPTIONAL PART:	107107	
		BACS21Y33R		

MISSING ITEM NUMBERS NOT APPLICABLE

– ITEM NOT ILLUSTRATED

BOEING PROPRIETARY - Copyright © - Unpublished Work - See title page for details.

FIG ITEM	PART NUMBER	1 2 3 4 5 6 7 NOMENCLATURE	EFFECT FROM TO	UNITS PER ASSY
21				
370	1127700	...WASHER SUPPLIER CODE: V60119 SPECIFICATION NUMBER: BACW10X4 OPTIONAL PART: 2600LW V71286	009009 107107	4
375	BRH10C3D	...NUT SUPPLIER CODE: V52828 SPECIFICATION NUMBER: BACN10JC3CD OPTIONAL PART: T6C1032JCD V11815 NS202486-02 V80539 102LH9075-3W V72962 H51650-3BAC V15653	009009 107107	1
380	NAS1149D0316H	...WASHER	009009 107107	1
385	VNS1924CA2-8	...STUD- SUPPLIER CODE: V5M902 SPECIFICATION NUMBER: BACS53B1EA2 OPTIONAL PART: VNS1924CA3-2-8 V92215 BACS53B1EA1	009009 107107	1
385	VNS1924CA1-8	...STUD- SUPPLIER CODE: V5M902 SPECIFICATION NUMBER: BACS53B1EA1 OPTIONAL PART: VNS1924CA3-1-8 V92215 BACS53B1EA2	009009 107107	1
390	350-1	...SPACER- SUPPLIER CODE: V28277	009009 107107	4
395	012001-101	...SPACER-CRIMP SUPPLIER CODE: V28277	009009 107107	4

MISSING ITEM NUMBERS NOT APPLICABLE

— ITEM NOT ILLUSTRATED

BOEING PROPRIETARY - Copyright © - Unpublished Work - See title page for details.

FIG ITEM	PART NUMBER	1 2 3 4 5 6 7 NOMENCLATURE	EFFECT FROM TO	UNITS PER ASSY
21				
400	233T2218-2	...FOOTREST ASSY	009009 107107	1
		ATTACHING PARTS		
405	NAS514P1032-24	...SCREW	009009 107107	2
		-------*-------		
410	MS21209F1-30	....INSERT	009009 107107	2
415	233T2218-4	....FOOTREST	009009 107107	1
420	233N2224-24	...PANEL ASSY-FWD	009009 107107	1
425	GR1003	....NUT-INSERT SUPPLIER CODE: V0625B OPTIONAL PART: NAS1330A06K106	009009 107107	5
425	NAS1330A06K106	....NUT- OPTIONAL PART: GR1003 V0625B	009009 107107	5
430	233N2224-26	....BACKPLATE- ALTERED FROM PART NUMBER: 233N2240-1	009009 107107	1
435	233N2224-25	....FRAME ASSY- ALTERED FROM PART NUMBER: 233N2228-1	009009 107107	1
440	WSI4-22	...NUT-PLATE SUPPLIER CODE: V04169 SPECIFICATION NUMBER: BACN10TL3-22	009009 107107	1
		ATTACHING PARTS		
- 441	BACR15BB3AD	...RIVET- SIZE DETERMINED ON INSTL.	009009 107107	2
		-------*-------		
445	WSI4-6	...NUTPLATE SUPPLIER CODE: V04169 SPECIFICATION NUMBER: BACN10TL3-6	009009 107107	2
		ATTACHING PARTS		
- 446	BACR15BA3AD	...RIVET- SIZE DETERMINED ON INSTL.	009009 107107	4
		-------*-------		
- 500	286N0017-002	WIRE BUNDLE ASSY-	002004 006010 107107 950999	RF

MISSING ITEM NUMBERS NOT APPLICABLE

- ITEM NOT ILLUSTRATED

BOEING PROPRIETARY - Copyright © - Unpublished Work - See title page for details.

FIG ITEM	PART NUMBER	1 2 3 4 5 6 7 NOMENCLATURE	EFFECT FROM TO	UNITS PER ASSY
21				
505	BACC45FN16-24P	.CONNECTOR-	002004	1
		ELECTRICAL EQUIP NUMBER:	006010	
		D40281J	107107	
		WIRING DIAGRAM REF:	950999	
		342291		
510	BACC45FN20-41P7	.CONNECTOR-	002004	1
		POSITION DATA:	006010	
		POSITION 02	107107	
		ELECTRICAL EQUIP NUMBER:	950999	
		D40671J		
		WIRING DIAGRAM REF:		
		342291		
- 515	286N0001-003	WIRE BUNDLE ASSY-	107107	RF
		REWORKED BY ALERT SB:		
		34A0222		
- 515	286N0001-005	WIRE BUNDLE ASSY-	002004	RF
		REWORKED BY ALERT SB:	006010	
		34A0222	950999	
520	BACC45FT16A24S	.CONNECTOR-	002004	1
		ELECTRICAL EQUIP NUMBER:	006010	
		D40281P	107107	
		WIRING DIAGRAM REF:	950999	
		342291		
525	BACC45FT20A41S7	.CONNECTOR-	002004	1
		POSITION DATA:	006010	
		POSITION 02	107107	
		ELECTRICAL EQUIP NUMBER:	950999	
		D40671P		
		WIRING DIAGRAM REF:		
		342218		
		REWORKED BY ALERT SB:		
		34A0222		

MISSING ITEM NUMBERS NOT APPLICABLE

- ITEM NOT ILLUSTRATED

BOEING PROPRIETARY - Copyright © - Unpublished Work - See title page for details.

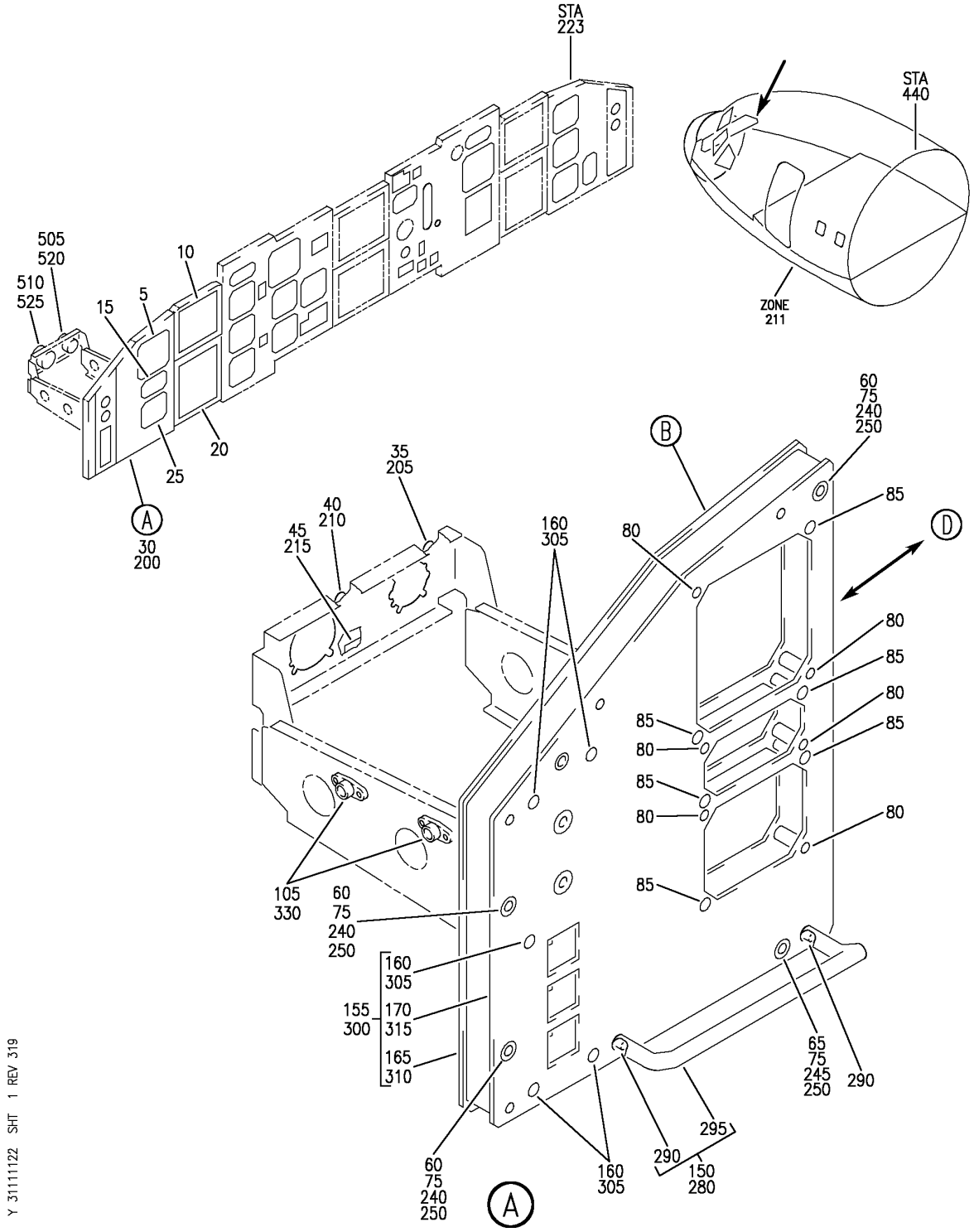

PANEL INSTL-CAPT P1-1 FWD (INDICATING AND RECORDING ONLY)
FIGURE 22 (SHEET 1)

BOEING PROPRIETARY - Copyright © - Unpublished Work - See title page for details.

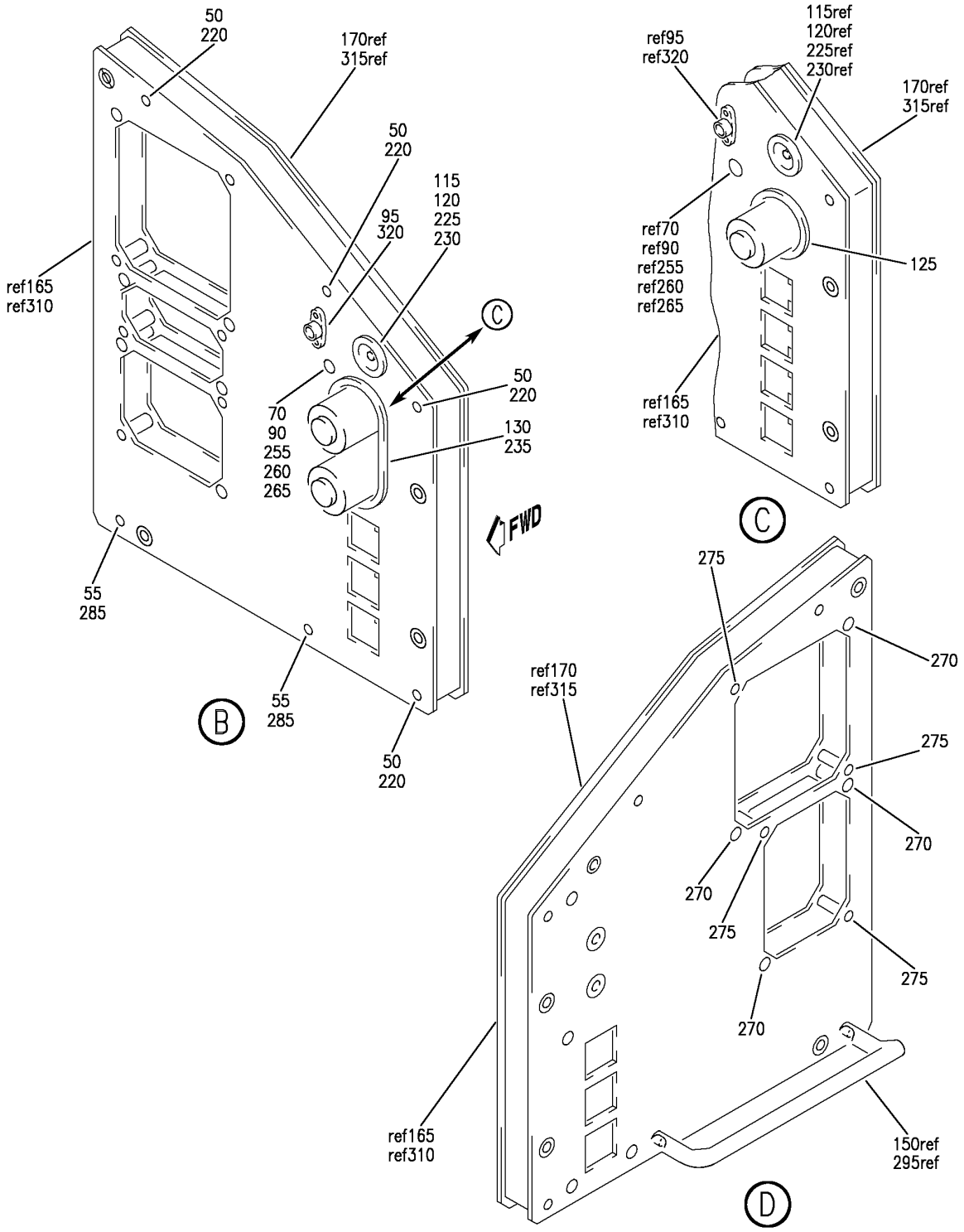

PANEL INSTL-CAPT P1-1 FWD (INDICATING AND RECORDING ONLY)
FIGURE 22 (SHEET 2)

BOEING PROPRIETARY - Copyright © - Unpublished Work - See title page for details.

FIG ITEM	PART NUMBER	1 2 3 4 5 6 7 NOMENCLATURE	EFFECT FROM TO	UNITS PER ASSY
22				
		PANEL INSTL-CAPT P1-1 FWD (INDICATING AND RECORDING ONLY)	121503 904949	
- 1	233N2101-1	PANEL INSTL-CAPT P1-1 (INDICATING AND RECORDING ONLY)	121503 904949	RF
		POSITION DATA: FWD		
		VARIABLE DRAWING REF: 233N2101-5003		
		FOR NHA/OTHER SYS DET SEE: 25-10-00-05A		
5	4039891-904	.INDICATOR-MACH AIRSPEED	121503 904949	RF
		SUPPLIER CODE: V58960		
		SPECIFICATION NUMBER: S231T100-2		
		ELECTRICAL EQUIP NUMBER: N00001		
		COMPONENT MAINT MANUAL REF: 34-13-09		
		QUALIFIED I/W DATA: S231T100-2/4039891-904 DISPLAY HAS MORE GRADUATIONS ON DIAL FACE THAN S231T100-1/ 4039891-903 REPLACE IN SHIP SHIPSETS ONLY		
		FOR BREAKDOWN SEE: 34-13-01-01		
10	622-7998-003	.INDICATOR ASSY-ELECTRONIC ATTITUDE DIRECTOR MULTICOLOR DISPLAY UNIT	121503 904949	RF
		SUPPLIER CODE: V4V792		
		SPECIFICATION NUMBER: S242T404-511		
		ELECTRICAL EQUIP NUMBER: N00004		
		COMPONENT MAINT MANUAL REF: 34-22-60		

MISSING ITEM NUMBERS NOT APPLICABLE

- ITEM NOT ILLUSTRATED

BOEING PROPRIETARY - Copyright © - Unpublished Work - See title page for details.

FIG ITEM	PART NUMBER	1 2 3 4 5 6 7 NOMENCLATURE	EFFECT FROM TO	UNITS PER ASSY
22				
10	622-7998-002	.INDICATOR ASSY-ELECTRONIC ATTITUDE DIRECTOR MULTICOLOR DISPLAY UNIT SUPPLIER CODE: V4V792 SPECIFICATION NUMBER: S242T404-510 ELECTRICAL EQUIP NUMBER: N00004 COMPONENT MAINT MANUAL REF: 34-22-60 OPTIONAL PART: 622-5047-101 V4V792	121503 904949	RF
10	622-5047-101	.INDICATOR ASSY-ELECTRONIC ATTITUDE DIRECTOR MULTICOLOR DISPLAY UNIT SUPPLIER CODE: V4V792 SPECIFICATION NUMBER: S242T404-502 ELECTRICAL EQUIP NUMBER: N00004 COMPONENT MAINT MANUAL REF: 34-22-71	121503 904949	RF
10	622-5047-100	.INDICATOR ASSY-ELECTRONIC ATTITUDE DIRECTOR MULTICOLOR DISPLAY UNIT SUPPLIER CODE: V4V792 SPECIFICATION NUMBER: S242T404-501 ELECTRICAL EQUIP NUMBER: N00004 COMPONENT MAINT MANUAL REF: 34-22-71	121503 904949	RF
15	622-5990-302	.INDICATOR-DUAL DISTANCE SUPPLIER CODE: V4V792 SPECIFICATION NUMBER: S242T403-302 ELECTRICAL EQUIP NUMBER: N10030 COMPONENT MAINT MANUAL REF: 34-22-76 FOR BREAKDOWN SEE: 34-55-03-02	121503 904949	RF

MISSING ITEM NUMBERS NOT APPLICABLE

– ITEM NOT ILLUSTRATED

BOEING PROPRIETARY - Copyright © - Unpublished Work - See title page for details.

FIG ITEM	PART NUMBER	1 2 3 4 5 6 7 NOMENCLATURE	EFFECT FROM TO	UNITS PER ASSY
22				
15	622-5990-001	.INDICATOR-DUAL DISTANCE SUPPLIER CODE: V4V792 SPECIFICATION NUMBER: S242T403-301 ELECTRICAL EQUIP NUMBER: N10030 COMPONENT MAINT MANUAL REF: 34-22-76 FOR BREAKDOWN SEE: 34-55-03-02	121503 904949	RF
20	622-7999-003	.INDICATOR ASSY-ELECTRONIC HORIZ SITUATION MULTICOLOR DISPLAY UNIT SUPPLIER CODE: V4V792 SPECIFICATION NUMBER: S242T404-611 MISCELLANEOUS DATA: 622-7999-013 IS IDENTICAL TO 622-7999-003 EXCEPT THAT THE BEZEL COLOR IS GRAY INSTEAD OF BROWN. 622-7999-013 IS INTERCHANGEABLE WITH 622-7999-003 SUBJECT TO CUSTOMER PREFERENCE SEE SPARES DWG. 242N5002 FOR 757 INTERCHANGEABILITY FOR 767 SEE 242T4213 ELECTRICAL EQUIP NUMBER: N00005 COMPONENT MAINT MANUAL REF: 34-22-60 FOR BREAKDOWN SEE: 34-22-04-01	121503 904949	RF

MISSING ITEM NUMBERS NOT APPLICABLE

– ITEM NOT ILLUSTRATED

BOEING PROPRIETARY - Copyright © - Unpublished Work - See title page for details.

FIG ITEM	PART NUMBER	1 2 3 4 5 6 7 NOMENCLATURE	EFFECT FROM TO	UNITS PER ASSY
22				
20	622-7999-002	.INDICATOR ASSY-ELECTRONIC HORIZ SITUATION MULTICOLOR DISPLAY UNIT SUPPLIER CODE: V4V792 FUNCTIONAL DESCRIPTION: CATHODE RAY TUBE USED AS AN HSI TO DISPLAY INERTIAL REFERENCE SYSTEM GENERATED TRACK AND HEADING AND AS A DISPLAY UNIT FOR THE EICAS SYSTEM SPECIFICATION NUMBER: S242T404-610 ELECTRICAL EQUIP NUMBER: N00005 COMPONENT MAINT MANUAL REF: 34-22-61 OPTIONAL PART: 622-5046-101 V4V792 FOR BREAKDOWN SEE: 34-22-04-01	121503 904949	RF
20	622-5046-101	.INDICATOR ASSY-ELECTRONIC HORIZ SITUATION MULTICOLOR DISPLAY UNIT SUPPLIER CODE: V4V792 SPECIFICATION NUMBER: S242T404-602 ELECTRICAL EQUIP NUMBER: N00005 COMPONENT MAINT MANUAL REF: 34-22-71 REWORKED BY AIRLINE MOD: VBAA FOR BREAKDOWN SEE: 34-22-04-01	121503 904949	RF

MISSING ITEM NUMBERS NOT APPLICABLE

– ITEM NOT ILLUSTRATED

BOEING PROPRIETARY - Copyright © - Unpublished Work - See title page for details.

FIG ITEM	PART NUMBER	1 2 3 4 5 6 7 NOMENCLATURE	EFFECT FROM TO	UNITS PER ASSY
22				
20	622-5046-100	.INDICATOR ASSY-ELECTRONIC HORIZ SITUATION MULTICOLOR DISPLAY UNIT SUPPLIER CODE: V4V792 SPECIFICATION NUMBER: S242T404-601 ELECTRICAL EQUIP NUMBER: N00005 COMPONENT MAINT MANUAL REF: 34-22-71 FOR BREAKDOWN SEE: 34-22-04-01	121503 904949	RF
25	65806-002-1	.CLOCK ASSY- SUPPLIER CODE: VF0216 SPECIFICATION NUMBER: S231T120-1 ELECTRICAL EQUIP NUMBER: N00002 COMPONENT MAINT MANUAL REF: 31-25-01 QUALIFIED I/W DATA: 2610-08-1(60B00303-107) I/W 65806-002-1(S231T120-1) IN SHIPSETS, FOR ALL FMC EXCEPT S242T102-451 WITH S/W PS4052970-95X, WHERE X CAN BE ANY VALUE, AND S242T102-455. FOR BREAKDOWN SEE: 31-25-01-01	121503 904949	RF
25	2600-06-1	.CLOCK ASSY- SUPPLIER CODE: V52013 ELECTRICAL EQUIP NUMBER: N00002 COMPONENT MAINT MANUAL REF: 31-20-01 QUALIFIED I/W DATA: 2600-06-1 I/W 2610-08-1 SUBJECT TO CUSTOMER PREFERENCE. FOR BREAKDOWN SEE: 31-25-01-01	121503 904949	RF

MISSING ITEM NUMBERS NOT APPLICABLE

— ITEM NOT ILLUSTRATED

BOEING PROPRIETARY - Copyright © - Unpublished Work - See title page for details.

FIG ITEM	PART NUMBER	1 2 3 4 5 6 7 NOMENCLATURE	EFFECT FROM TO	UNITS PER ASSY
22				
30	233N2220-13	.MODULE ASSY- FOR OTHER SYS DETAILS SEE: 31-25-01-01 34-12-01-04 34-13-01-01 34-21-02-04 34-22-00-02 34-22-02-06 34-55-03-02 34-61-02-15	121503 904949	1
35	BAC27NEL0187	..DECAL- PLACARD CONTENT: 1	121503 904949	1
40	BAC27NEL0188	..DECAL- PLACARD CONTENT: 2	121503 904949	1
45	BAC27NEL0338	..DECAL- PLACARD CONTENT: AP0101	121503 904949	1
50	NAS514P832-8	..SCREW	121503 904949	4
55	NAS514P1032-24	..SCREW	121503 904949	2
60	BACS21Y34R	..STUD ASSY	121503 904949	3
65	BACS21Y33R	..STUD ASSY	121503 904949	1
70	VNS1924CA1-8	..STUD- SUPPLIER CODE: V5M902 SPECIFICATION NUMBER: BACS53B1EA1 OPTIONAL PART: VNS1924CA3-1-8 V92215 BACS53B1EA2	121503 904949	1
70	VNS1924CA2-8	..STUD- SUPPLIER CODE: V5M902 SPECIFICATION NUMBER: BACS53B1EA2 OPTIONAL PART: VNS1924CA3-2-8 V92215 BACS53B1EA1	121503 904949	1

MISSING ITEM NUMBERS NOT APPLICABLE

– ITEM NOT ILLUSTRATED

BOEING PROPRIETARY - Copyright © - Unpublished Work - See title page for details.

FIG ITEM	PART NUMBER	1 2 3 4 5 6 7 NOMENCLATURE	EFFECT FROM TO	UNITS PER ASSY
22				
75	1127700	..WASHER SUPPLIER CODE: V60119 SPECIFICATION NUMBER: BACW10X4 OPTIONAL PART: 2600LW V71286	121503 904949	4
80	012001-101	..SPACER- SUPPLIER CODE: V28277	121503 904949	6
85	350-1	..SPACER- SUPPLIER CODE: V28277	121503 904949	6
90	BRH10A3	..NUT SUPPLIER CODE: V52828 SPECIFICATION NUMBER: BACN10JC3 OPTIONAL PART: H10-3BAC V15653 NS202101-02 V80539 RMLH9075-3W V72962 VN303A02 V92215 96-02 V80539 T6S1032J V11815	121503 904949	1
95	WSI4-22	..NUT SUPPLIER CODE: V04169 SPECIFICATION NUMBER: BACN10TL3-22 ATTACHING PARTS	121503 904949	1
- 100	BACR15BB3AD	..RIVET- SIZE DETERMINED ON INSTL. -------*-------	121503 904949	2
105	WSI4-6	..NUTPLATE SUPPLIER CODE: V04169 SPECIFICATION NUMBER: BACN10TL3-6	121503 904949	2

MISSING ITEM NUMBERS NOT APPLICABLE

- ITEM NOT ILLUSTRATED

BOEING PROPRIETARY - Copyright © - Unpublished Work - See title page for details.

FIG ITEM	PART NUMBER	1 2 3 4 5 6 7 NOMENCLATURE	EFFECT FROM TO	UNITS PER ASSY
22				
		ATTACHING PARTS		
- 110	BACR15BA3AD	..RIVET-	121503	4
		SIZE DETERMINED ON INSTL.	904949	
		-------*-------		
115	233T2220-4	..CUP ASSY	121503	1
			904949	
120	800000121-1	..CONNECTOR-PWR	121503	1
		SUPPLIER CODE:	904949	
		V05617		
125	233T2220-1	..CUP ASSY	121503	1
			904949	
150	233T2218-2	..FOOTREST ASSY	121503	1
			904949	
155	233N2224-10	..PANEL ASSY	121503	1
			904949	
160	GR1003	...NUT-INSERT	121503	5
		SUPPLIER CODE:	904949	
		V0625B		
165	233N2224-12	...PLATE	121503	1
			904949	
170	233N2224-11	...FRAME ASSY	121503	1
			904949	
- 500	286N0017-002	WIRE BUNDLE ASSY-	121503	RF
			904949	
505	BACC45FN16-24P	.CONNECTOR-	121503	1
		ELECTRICAL EQUIP NUMBER:	904949	
		D40281J		
		WIRING DIAGRAM REF:		
		342291		
510	BACC45FN20-41P7	.CONNECTOR-	121503	1
		ELECTRICAL EQUIP NUMBER:	904949	
		D40671J		
		WIRING DIAGRAM REF:		
		342291		
- 515	286N0001-002	WIRE BUNDLE ASSY-	121503	RF
		REWORKED BY ALERT SB:	904949	
		34A0222		
520	BACC45FT16A24S	.CONNECTOR-	121503	1
		ELECTRICAL EQUIP NUMBER:	904949	
		D40281P		
		WIRING DIAGRAM REF:		
		342291		

MISSING ITEM NUMBERS NOT APPLICABLE

- ITEM NOT ILLUSTRATED

BOEING PROPRIETARY - Copyright © - Unpublished Work - See title page for details.

FIG ITEM	PART NUMBER	1 2 3 4 5 6 7 NOMENCLATURE	EFFECT FROM TO	UNITS PER ASSY
22				
525	BACC45FN20A41S7	.CONNECTOR- POSITION DATA: POSITION 02 ELECTRICAL EQUIP NUMBER: D40671P WIRING DIAGRAM REF: 342291 REWORKED BY ALERT SB: 34A0222	121503 904949	1

MISSING ITEM NUMBERS NOT APPLICABLE

– ITEM NOT ILLUSTRATED

BOEING PROPRIETARY - Copyright © - Unpublished Work - See title page for details.

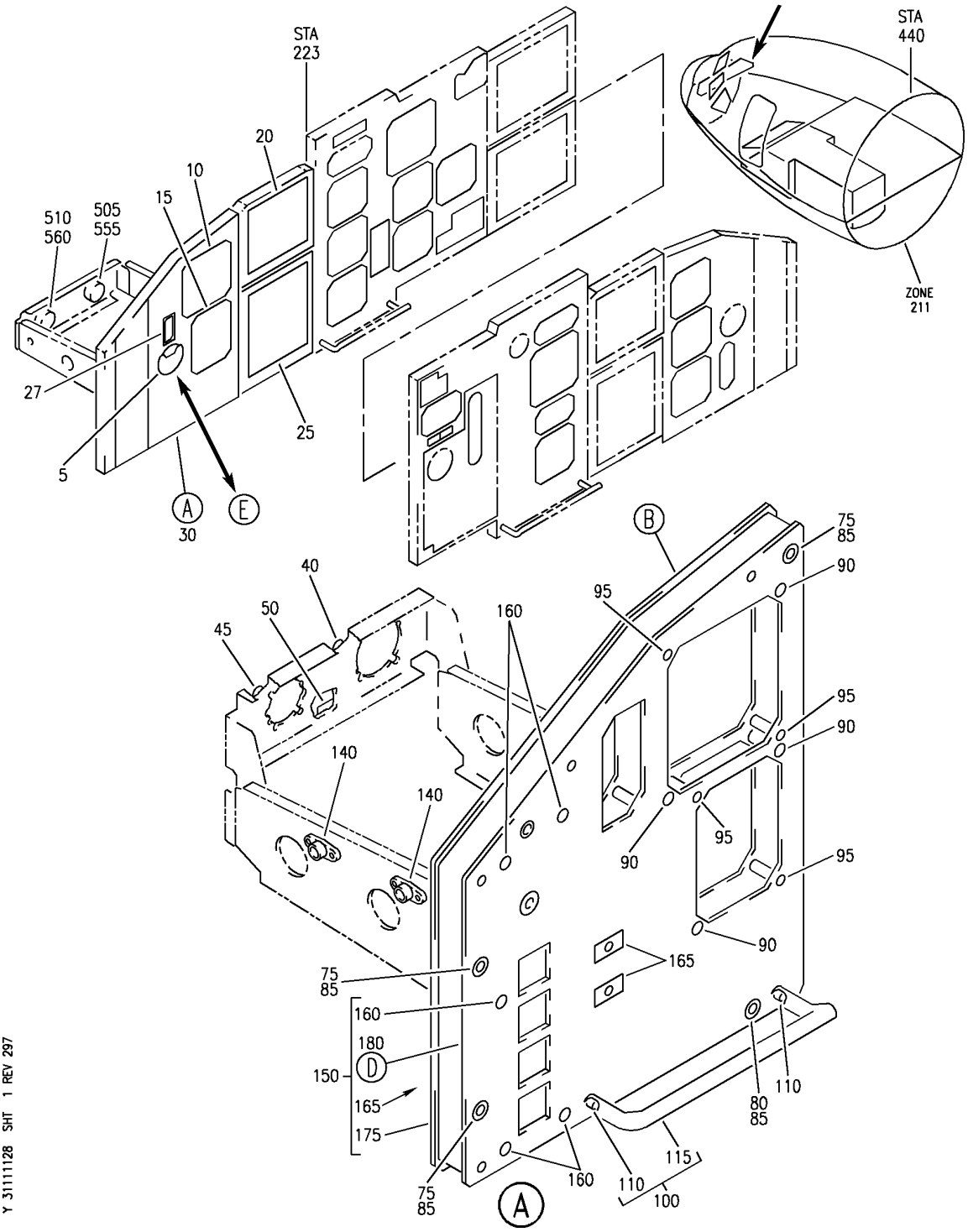

PANEL INSTL-P1-1 (CAPTAIN'S INSTRUMENT PANEL ONLY)
FIGURE 28 (SHEET 1)

BOEING PROPRIETARY - Copyright © - Unpublished Work - See title page for details.

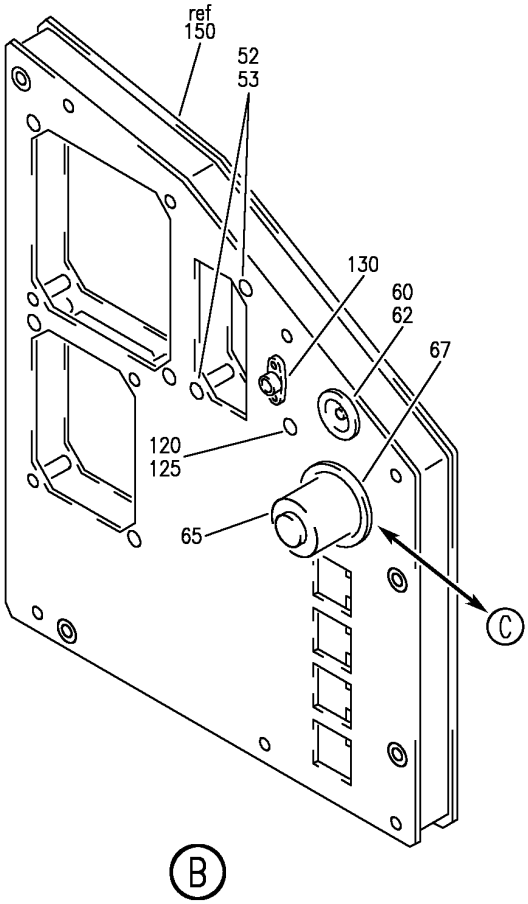

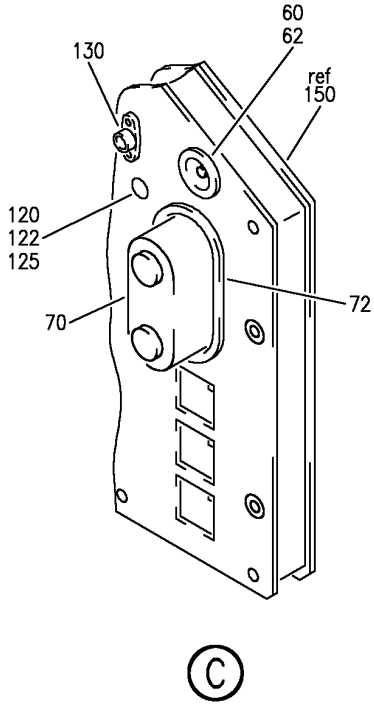

Y 31111128 SHT 2 REV 271

PANEL INSTL-P1-1 (CAPTAIN'S INSTRUMENT PANEL ONLY)
FIGURE 28 (SHEET 2)

BOEING PROPRIETARY - Copyright © - Unpublished Work - See title page for details.

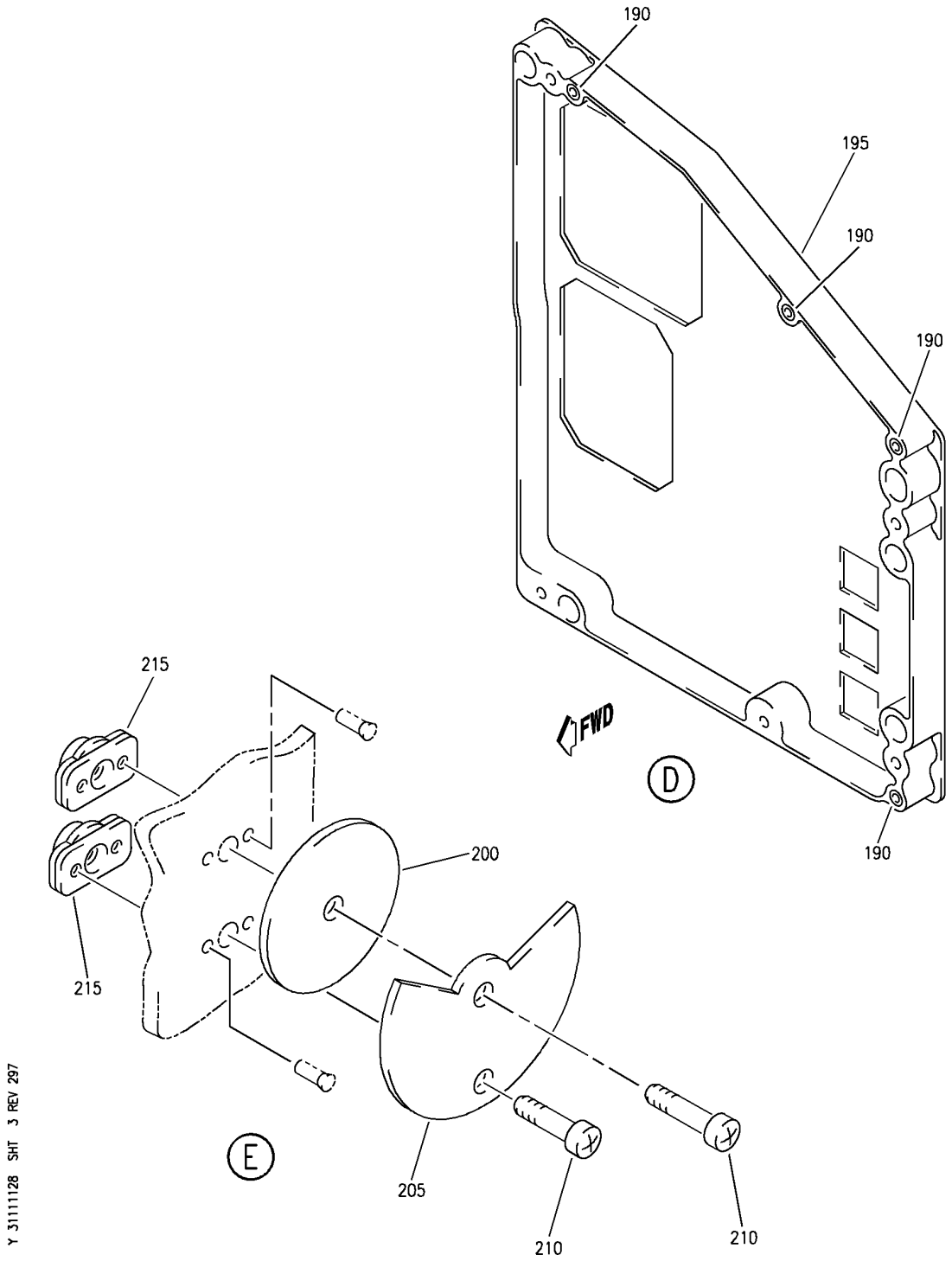

PANEL INSTL-P1-1 (CAPTAIN'S INSTRUMENT PANEL ONLY)
FIGURE 28 (SHEET 3)

BOEING PROPRIETARY - Copyright © - Unpublished Work - See title page for details.

FIG ITEM	PART NUMBER	1 2 3 4 5 6 7 NOMENCLATURE	EFFECT FROM TO	UNITS PER ASSY
28				
		PANEL INSTL-P1-1 (CAPTAIN'S INSTRUMENT PANEL ONLY)	011100	
- 1	233N2101-1	PANEL INSTL-P1-1 (CAPTAIN'S INSTRUMENT PANEL ONLY) VARIABLE DRAWING REF: 233N2101-5039 FOR NHA/OTHER SYS DET SEE: 25-10-00-05A	011100	RF
10	4039891-903	.INDICATOR-MACH AIRSPEED SUPPLIER CODE: V58960 SPECIFICATION NUMBER: S231T100-1 ELECTRICAL EQUIP NUMBER: N00001 COMPONENT MAINT MANUAL REF: 34-13-09 FOR BREAKDOWN SEE: 34-13-02-01	011100	RF
15	622-5001-109	.INDICATOR ASSY-DME/RADIO MAGNETIC SUPPLIER CODE: V4V792 SPECIFICATION NUMBER: S242T403-109 ELECTRICAL EQUIP NUMBER: N00003 COMPONENT MAINT MANUAL REF: 34-22-73 QUALIFIED I/W DATA: S242T403-107 (622-5001-107) RB S242T403-109 (622-5001-109) WITH THE INCORPORATION OF S/B 57-34-0018 AND VENDOR S/B (ROCKWELL COLLINS) RDM1 743-34-10(R1) FOR BREAKDOWN SEE: 34-22-05-02	011100	RF

MISSING ITEM NUMBERS NOT APPLICABLE

- ITEM NOT ILLUSTRATED

BOEING PROPRIETARY - Copyright © - Unpublished Work - See title page for details.

FIG ITEM	PART NUMBER	1 2 3 4 5 6 7 NOMENCLATURE	EFFECT FROM TO	UNITS PER ASSY
28				
20	622-7998-003	.INDICATOR ASSY-ELECT. ATTITUDE DIRECTOR MULTICOLOR DISPLAY UNIT SUPPLIER CODE: V4V792 SPECIFICATION NUMBER: S242T404-511 ELECTRICAL EQUIP NUMBER: N00004 COMPONENT MAINT MANUAL REF: 34-22-60	011100	RF
20	622-5047-101	.INDICATOR ASSY-ELECT. ATTITUDE DIRECTOR MULTICOLOR DISPLAY UNIT SUPPLIER CODE: V4V792 SPECIFICATION NUMBER: S242T404-502 ELECTRICAL EQUIP NUMBER: N00004 COMPONENT MAINT MANUAL REF: 34-22-71	011100	RF
20	622-5047-100	.INDICATOR ASSY-ELECT. ATTITUDE DIRECTOR MULTICOLOR DISPLAY UNIT SUPPLIER CODE: V4V792 SPECIFICATION NUMBER: S242T404-501 ELECTRICAL EQUIP NUMBER: N00004 COMPONENT MAINT MANUAL REF: 34-22-71	011100	RF
20	622-7998-002	.INDICATOR ASSY-ELECT. ATTITUDE DIRECTOR MULTICOLOR DISPLAY UNIT SUPPLIER CODE: V4V792 SPECIFICATION NUMBER: S242T404-510 ELECTRICAL EQUIP NUMBER: N00004 COMPONENT MAINT MANUAL REF: 34-22-60	011100	RF

MISSING ITEM NUMBERS NOT APPLICABLE

– ITEM NOT ILLUSTRATED

BOEING PROPRIETARY - Copyright © - Unpublished Work - See title page for details.

FIG ITEM	PART NUMBER	1 2 3 4 5 6 7 NOMENCLATURE	EFFECT FROM TO	UNITS PER ASSY
28				
25	622-7999-003	.INDICATOR ASSY-ELECT. HORIZ SITUATION MULTICOLOR DISPLAY UNIT SUPPLIER CODE: V4V792 SPECIFICATION NUMBER: S242T404-611 MISCELLANEOUS DATA: 622-7999-013 IS IDENTICAL TO 622-7999-003 EXCEPT THAT THE BEZEL COLOR IS GRAY INSTEAD OF BROWN. 622-7999-013 IS INTERCHANGEABLE WITH 622-7999-003 SUBJECT TO CUSTOMER PREFERENCE SEE SPARES DWG. 242N5002 FOR 757 INTERCHANGEABILITY FOR 767 SEE 242T4213 ELECTRICAL EQUIP NUMBER: N00005 COMPONENT MAINT MANUAL REF: 34-22-60 FOR BREAKDOWN SEE: 34-22-04-01	011100	RF
25	622-5046-101	.INDICATOR ASSY-ELECT. HORIZ SITUATION MULTICOLOR DISPLAY UNIT SUPPLIER CODE: V4V792 SPECIFICATION NUMBER: S242T404-602 ELECTRICAL EQUIP NUMBER: N00005 COMPONENT MAINT MANUAL REF: 34-22-71 FOR BREAKDOWN SEE: 34-22-04-01	011100	RF

MISSING ITEM NUMBERS NOT APPLICABLE

– ITEM NOT ILLUSTRATED

BOEING PROPRIETARY - Copyright © - Unpublished Work - See title page for details.

FIG ITEM	PART NUMBER	1 2 3 4 5 6 7 NOMENCLATURE	EFFECT FROM TO	UNITS PER ASSY
28				
25	622-5046-100	.INDICATOR ASSY-ELECT. HORIZ SITUATION MULTICOLOR DISPLAY UNIT SUPPLIER CODE: V4V792 SPECIFICATION NUMBER: S242T404-601 ELECTRICAL EQUIP NUMBER: N00005 COMPONENT MAINT MANUAL REF: 34-22-71 FOR BREAKDOWN SEE: 34-22-04-01	011100	RF
25	622-7999-002	.INDICATOR ASSY-ELECT. HORIZ SITUATION MULTICOLOR DISPLAY UNIT SUPPLIER CODE: V4V792 FUNCTIONAL DESCRIPTION: CATHODE RAY TUBE USED AS AN HSI TO DISPLAY INERTIAL REFERENCE SYSTEM GENERATED TRACK AND HEADING AND AS A DISPLAY UNIT FOR THE EICAS SYSTEM SPECIFICATION NUMBER: S242T404-610 ELECTRICAL EQUIP NUMBER: N00005 COMPONENT MAINT MANUAL REF: 34-22-61	011100	RF
30	233N2220-301	.MODULE ASSY- COMPONENT MAINT MANUAL REF: 31-11-47 FOR OTHER SYS DETAILS SEE: 33-13-57-02 34-12-01-05 34-13-02-01 34-21-02-03 34-22-00-01 34-22-02-05 34-22-05-02 34-61-02-14	011100	1
- 35	233N2220-10	..MODULE ASSY-	011100	RF
40	BAC27NEL0187	...DECAL- PLACARD CONTENT: 1	011100	1

MISSING ITEM NUMBERS NOT APPLICABLE

- ITEM NOT ILLUSTRATED

BOEING PROPRIETARY - Copyright © - Unpublished Work - See title page for details.

FIG ITEM	PART NUMBER	1 2 3 4 5 6 7 NOMENCLATURE	EFFECT FROM TO	UNITS PER ASSY
28				
45	BAC27NEL0188	...DECAL-	011100	1
		PLACARD CONTENT:		
		2		
50	BAC27NEL0338	...DECAL-	011100	1
		PLACARD CONTENT:		
		AP0101		
60	233T2220-4	...CUP ASSY	011100	1
62	233T2220-6	....SEAL	011100	1
65	233T2220-1	...CUP ASSY-	011100	1
67	233T2220-3	....SEAL	011100	1
75	BACS21Y34R	...STUD ASSY-	011100	3
80	BACS21Y33R	...STUD ASSY-	011100	1
85	1127700	...WASHER	011100	4
		SUPPLIER CODE:		
		V60119		
		SPECIFICATION NUMBER:		
		BACW10X4		
		OPTIONAL PART:		
		2600LW		
		V71286		
90	350-1	...SPACER-	011100	4
		SUPPLIER CODE:		
		V28277		
95	012001-101	...SPACER-CRIMP	011100	4
		SUPPLIER CODE:		
		V28277		
100	233T2218-2	...FOOTREST ASSY	011100	1
		ATTACHING PARTS		
- 105	NAS514P1032-24	...SCREW	011100	2
		-------*-------		
110	MS21209F1-30	....INSERT	011100	2
115	233T2218-4	....FOOTREST	011100	1
120	VNS1924CA1-8	...STUD-	011100	1
		SUPPLIER CODE:		
		V5M902		
		SPECIFICATION NUMBER:		
		BACS53B1EA1		
		OPTIONAL PART:		
		VNS1924CA3-1-8		
		V92215		
		BACS53B1EA2		

MISSING ITEM NUMBERS NOT APPLICABLE

- ITEM NOT ILLUSTRATED

BOEING PROPRIETARY - Copyright © - Unpublished Work - See title page for details.

FIG ITEM	PART NUMBER	1 2 3 4 5 6 7 NOMENCLATURE	EFFECT FROM TO	UNITS PER ASSY
28				
120	VNS1924CA2-8	...STUD-	011100	1
		SUPPLIER CODE:		
		V5M902		
		SPECIFICATION NUMBER:		
		BACS53B1EA2		
		OPTIONAL PART:		
		VNS1924CA3-2-8		
		V92215		
		BACS53B1EA1		
125	BRH10A3	...NUT-	011100	1
		SUPPLIER CODE:		
		V52828		
		SPECIFICATION NUMBER:		
		BACN10JC3		
		OPTIONAL PART:		
		H10-3BAC		
		V15653		
		NS202101-02		
		V80539		
		RMLH9075-3W		
		V72962		
		VN303A02		
		V92215		
		96-02		
		V80539		
		T6S1032J		
		V11815		
130	WSI4-22	...NUT	011100	1
		SUPPLIER CODE:		
		V04169		
		SPECIFICATION NUMBER:		
		BACN10TL3-22		
		ATTACHING PARTS		
- 135	BACR15BB3AD	...RIVET-	011100	2
		SIZE DETERMINED ON INSTL.		
		-------*-------		
140	WSI4-6	...NUTPLATE	011100	2
		SUPPLIER CODE:		
		V04169		
		SPECIFICATION NUMBER:		
		BACN10TL3-6		
		ATTACHING PARTS		
- 145	BACR15BA3AD	...RIVET-	011100	4
		SIZE DETERMINED ON INSTL.		
		-------*-------		
150	233N2224-7	...PANEL ASSY-FWD	011100	1
		ATTACHING PARTS		
- 155	NAS514P832-8	...SCREW	011100	4
		-------*-------		

MISSING ITEM NUMBERS NOT APPLICABLE

- ITEM NOT ILLUSTRATED

BOEING PROPRIETARY - Copyright © - Unpublished Work - See title page for details.

FIG ITEM	PART NUMBER	1 2 3 4 5 6 7 NOMENCLATURE	EFFECT FROM TO	UNITS PER ASSY
28				
160	GR1003	....NUT-INSERT SUPPLIER CODE: V0625B	011100	5
175	233N2224-9	....BACKPLATE- ALTERED FROM PART NUMBER: 233N2240-1	011100	1
180	233N2224-8	....FRAME ASSY-	011100	1
- 185	233N2228-1	.....FRAME ASSY-	011100	1
190	MS21209C0825P	.....INSERT-	011100	4
195	233N2228-2	.....FRAME-	011100	1
- 500	286N0017-002	WIRE BUNDLE ASSY-	011100	RF
505	BACC45FN16-24P	.CONNECTOR- ELECTRICAL EQUIP NUMBER: D40281J WIRING DIAGRAM REF: 342291	011100	1
510	BACC45FN20-41P7	.CONNECTOR- ELECTRICAL EQUIP NUMBER: D40671J WIRING DIAGRAM REF: 342291	011100	1
- 550	286N0001-005	WIRE BUNDLE ASSY- REWORKED BY ALERT SB: 34A0222	011100	RF
555	BACC45FT16A24S	.CONNECTOR- ELECTRICAL EQUIP NUMBER: D40281P WIRING DIAGRAM REF: 342291	011100	1
560	BACC45FT20A41S7	.CONNECTOR- POSITION DATA: POSITION 02 ELECTRICAL EQUIP NUMBER: D40671P WIRING DIAGRAM REF: 342291 REWORKED BY ALERT SB: 34A0222	011100	1

MISSING ITEM NUMBERS NOT APPLICABLE

- ITEM NOT ILLUSTRATED

BOEING PROPRIETARY - Copyright © - Unpublished Work - See title page for details.

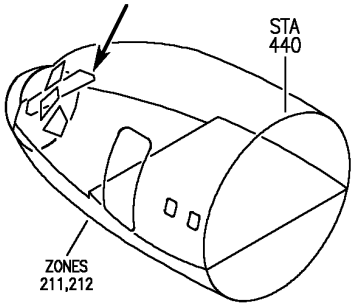

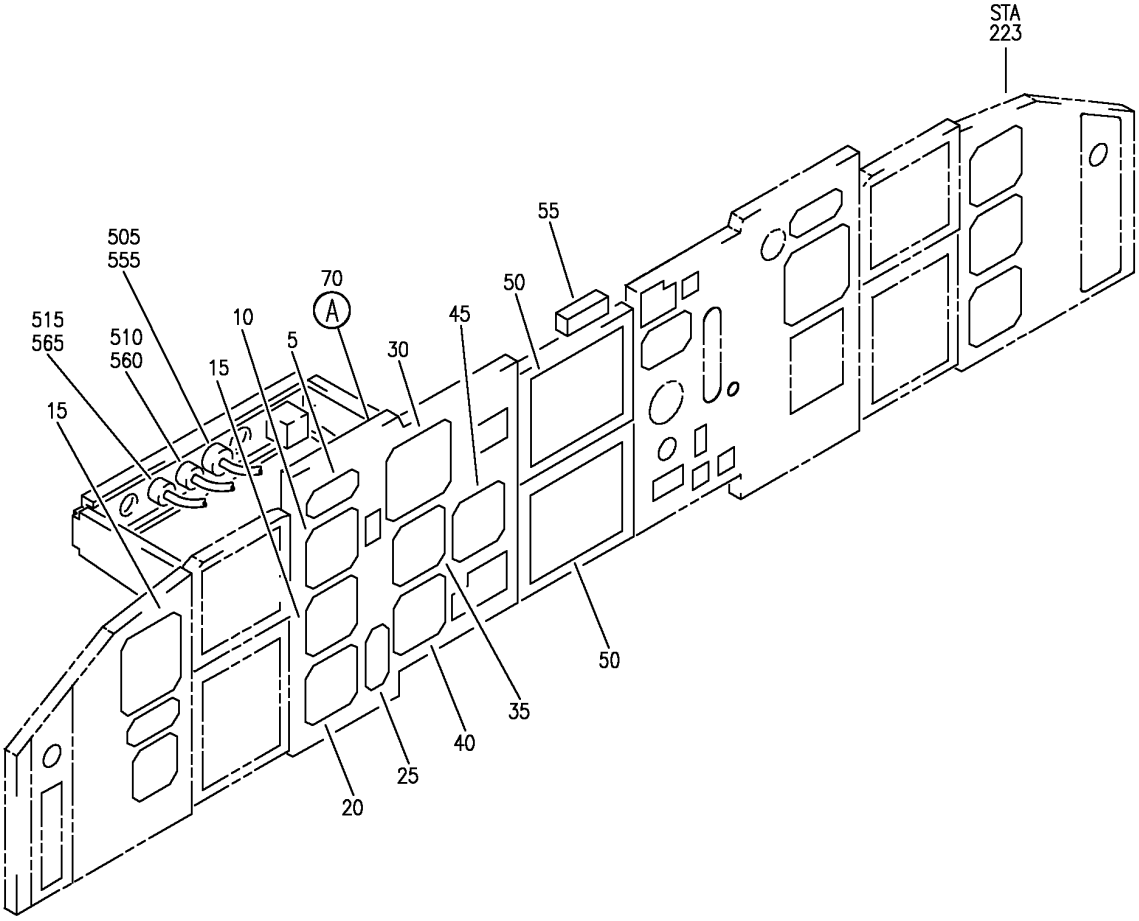

Y 31111135 SHT 1 REV 267

PANEL INSTL-P1-3 (CAPTAIN'S INSTRUMENT PANEL ONLY)
FIGURE 35 (SHEET 1)

BOEING PROPRIETARY - Copyright © - Unpublished Work - See title page for details.

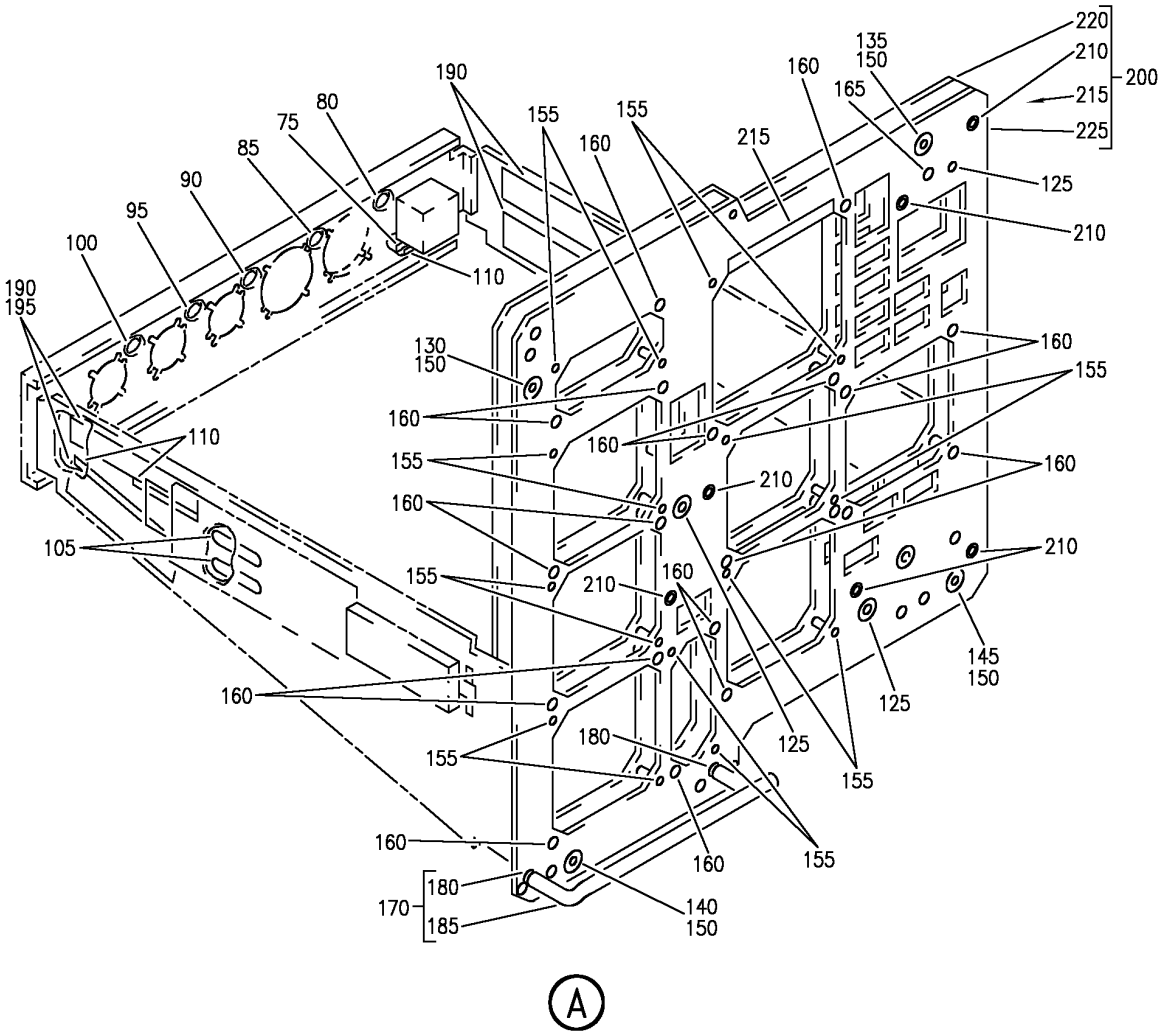

Y 31111135 SHT 2 REV 267

PANEL INSTL-P1-3 (CAPTAIN'S INSTRUMENT PANEL ONLY)
FIGURE 35 (SHEET 2)

BOEING PROPRIETARY - Copyright © - Unpublished Work - See title page for details.

FIG ITEM	PART NUMBER	1 2 3 4 5 6 7 NOMENCLATURE	EFFECT FROM TO	UNITS PER ASSY
35				
		PANEL INSTL-P1-3 (CAPTAIN'S INSTRUMENT PANEL ONLY)	121503 904949	
- 1	233N2101-1	PANEL INSTL-P1-3 (CAPTAIN'S INSTRUMENT PANEL ONLY) FOR NHA/OTHER SYS DET SEE: 25-10-00-05A	121503 904949	RF
5	622-5374-003	.INDICATOR ASSY-AUTOLAND STATUS SUPPLIER CODE: V4V792 SPECIFICATION NUMBER: S241T120-2 ELECTRICAL EQUIP NUMBER: N00070 COMPONENT MAINT MANUAL REF: 22-14-70 FOR BREAKDOWN SEE: 22-14-01-01	121503 904949	RF
10	4039892-904	.INDICATOR ASSY-ALTM SUPPLIER CODE: V58960 SPECIFICATION NUMBER: S231T101-1 ELECTRICAL EQUIP NUMBER: N00008 COMPONENT MAINT MANUAL REF: 34-13-08 QUALIFIED I/W DATA: INTERCHANGEABLE AS A SHIPSET FOR BREAKDOWN SEE: 34-13-01-01	121503 904949	RF
15	4039893-902	.INDICATOR-VERT. SPEED SUPPLIER CODE: V58960 SPECIFICATION NUMBER: S231T102-1 ELECTRICAL EQUIP NUMBER: N00009 COMPONENT MAINT MANUAL REF: 34-13-07 FOR BREAKDOWN SEE: 34-22-06-03	121503 904949	RF

MISSING ITEM NUMBERS NOT APPLICABLE

- ITEM NOT ILLUSTRATED

BOEING PROPRIETARY - Copyright © - Unpublished Work - See title page for details.

FIG ITEM	PART NUMBER	1 2 3 4 5 6 7 NOMENCLATURE	EFFECT FROM TO	UNITS PER ASSY
35				
20	622-5002-203	.INDICATOR ASSY-RADIO MAGNETIC/DME SUPPLIER CODE: V4V792 SPECIFICATION NUMBER: S242T403-204 ELECTRICAL EQUIP NUMBER: N10024 COMPONENT MAINT MANUAL REF: 34-22-74 FOR BREAKDOWN SEE: 34-22-05-01	121503 904949	RF
25	622-6006-002	.ANNUNCIATOR ASSY-RADIO MAGNETIC IND BRG SUPPLIER CODE: V4V792 SPECIFICATION NUMBER: S242T403-401 ELECTRICAL EQUIP NUMBER: N10025 COMPONENT MAINT MANUAL REF: 34-22-77	121503 904949	RF
30	H150AKM	.INDICATOR ASSY-STBY ATTITUDE SUPPLIER CODE: VF6306 SPECIFICATION NUMBER: S231T110-5 ELECTRICAL EQUIP NUMBER: N00020 COMPONENT MAINT MANUAL REF: 34-23-80 FOR BREAKDOWN SEE: 34-24-01-01	121503 904949	RF
30	H150AKM1	.INDICATOR ASSY-STBY ATTITUDE SUPPLIER CODE: VF6306 SPECIFICATION NUMBER: S231T110-6 ELECTRICAL EQUIP NUMBER: N00020 COMPONENT MAINT MANUAL REF: 34-23-80 FOR BREAKDOWN SEE: 34-24-01-01	121503 904949	RF

MISSING ITEM NUMBERS NOT APPLICABLE

– ITEM NOT ILLUSTRATED

BOEING PROPRIETARY - Copyright © - Unpublished Work - See title page for details.

FIG ITEM	PART NUMBER	1 2 3 4 5 6 7 NOMENCLATURE	EFFECT FROM TO	UNITS PER ASSY
35				
35	A3615710070	.INDICATOR-STBY AIRSPEED SUPPLIER CODE: V89944 SPECIFICATION NUMBER: S231T112-4 ELECTRICAL EQUIP NUMBER: N00022 COMPONENT MAINT MANUAL REF: 34-13-04 QUALIFIED I/W DATA: A3615710071 MAY REPLACE A3615710070 SUBJECT TO CUSTOMER PREFERENCE FOR BREAKDOWN SEE: 34-13-05-01	121503 904949	RF
40	LK35-1	.INDICATOR ASSY-STBY ALTM SUPPLIER CODE: VS4276 SPECIFICATION NUMBER: S231T113-1 ELECTRICAL EQUIP NUMBER: N00023 COMPONENT MAINT MANUAL REF: 34-13-02 QUALIFIED I/W DATA: LK35-9 I/W LK35-1 SUBJECT TO CUSTOMER PREFERENCE OF RANGE LIMIT FOR THE BARO CORRECTION RESOLVER OUTPUT. FOR BREAKDOWN SEE: 34-13-06-01	121503 904949	RF
45	404EED1-1	.INDICATOR ASSY-STBY ENG SUPPLIER CODE: VK5294 SPECIFICATION NUMBER: S231N001-7 ELECTRICAL EQUIP NUMBER: N10016 COMPONENT MAINT MANUAL REF: 77-40-03 FOR BREAKDOWN SEE: 77-41-01-02	121503 904949	RF

MISSING ITEM NUMBERS NOT APPLICABLE

– ITEM NOT ILLUSTRATED

BOEING PROPRIETARY - Copyright © - Unpublished Work - See title page for details.

FIG ITEM	PART NUMBER	1 2 3 4 5 6 7 NOMENCLATURE	EFFECT FROM TO	UNITS PER ASSY
35				
50	622-5046-101	.INDICATOR ASSY-ENG INDICATING AND CREW ALERTING SYS MULTICOLOR DISPLAY UNIT SUPPLIER CODE: V4V792 SPECIFICATION NUMBER: S242T404-602 ELECTRICAL EQUIP NUMBER: N10013 N10014 COMPONENT MAINT MANUAL REF: 34-22-71 FOR BREAKDOWN SEE: 31-41-01-01	121503 904949	RF
50	622-7999-002	.INDICATOR ASSY-ENG INDICATING AND CREW ALERTING SYS MULTICOLOR DISPLAY UNIT SUPPLIER CODE: V4V792 FUNCTIONAL DESCRIPTION: CATHODE RAY TUBE USED AS AN HSI TO DISPLAY INERTIAL REFERENCE SYSTEM GENERATED TRACK AND HEADING AND AS A DISPLAY UNIT FOR THE EICAS SYSTEM SPECIFICATION NUMBER: S242T404-610 ELECTRICAL EQUIP NUMBER: N10013 N10014 COMPONENT MAINT MANUAL REF: 34-22-61 OPTIONAL PART: 622-5046-101 V4V792 FOR BREAKDOWN SEE: 31-41-01-01	121503 904949	RF

MISSING ITEM NUMBERS NOT APPLICABLE

– ITEM NOT ILLUSTRATED

BOEING PROPRIETARY - Copyright © - Unpublished Work - See title page for details.

FIG ITEM	PART NUMBER	1 2 3 4 5 6 7 NOMENCLATURE	EFFECT FROM TO	UNITS PER ASSY
35				
50	622-7999-003	.INDICATOR ASSY-ENG INDICATING AND CREW ALERTING SYS MULTICOLOR DISPLAY UNIT SUPPLIER CODE: V4V792 SPECIFICATION NUMBER: S242T404-611 MISCELLANEOUS DATA: 622-7999-013 IS IDENTICAL TO 622-7999-003 EXCEPT THAT THE BEZEL COLOR IS GRAY INSTEAD OF BROWN. 622-7999-013 IS INTERCHANGEABLE WITH 622-7999-003 SUBJECT TO CUSTOMER PREFERENCE SEE SPARES DWG. 242N5002 FOR 757 INTERCHANGEABILITY FOR 767 SEE 242T4213 ELECTRICAL EQUIP NUMBER: N10013 N10014 COMPONENT MAINT MANUAL REF: 34-22-60 FOR BREAKDOWN SEE: 31-41-01-01	121503 904949	RF
50	622-5046-100	.INDICATOR ASSY-ENG INDICATING AND CREW ALERTING SYS MULTICOLOR DISPLAY UNIT SUPPLIER CODE: V4V792 SPECIFICATION NUMBER: S242T404-601 ELECTRICAL EQUIP NUMBER: N10013 N10014 COMPONENT MAINT MANUAL REF: 34-22-71 FOR BREAKDOWN SEE: 31-41-01-01	121503 904949	RF
55	1040	.INDICATOR-LEVEL INCLINOMETER SUPPLIER CODE: V50926	121503 904949	1

MISSING ITEM NUMBERS NOT APPLICABLE

— ITEM NOT ILLUSTRATED

BOEING PROPRIETARY - Copyright © - Unpublished Work - See title page for details.

FIG ITEM	PART NUMBER	1 2 3 4 5 6 7 NOMENCLATURE	EFFECT FROM TO	UNITS PER ASSY
35				
		ATTACHING PARTS		
- 60	NAS600-14P	.SCREW	121503 904949	2
- 65	NAS43DD1-6	.SPACER	121503 904949	2
		-------*-------		
70	233N2221-62	.MODULE ASSY- FOR OTHER SYS DETAILS SEE: 11-31-01-01 22-14-01-01 22-34-51-01 29-21-55-01 31-41-52-01 31-51-52-01 32-41-52-01 32-42-55-01 33-13-57-01 33-16-52-01 34-13-01-01 34-16-51-01 34-22-06-03 34-22-07-03 34-24-01-01 34-32-00-01 34-46-51-01 34-61-01-09 77-41-01-02 79-33-51-02	121503 904949	1
75	BAC27NEL0339	..DECAL- PLACARD CONTENT: AP0103	121503 904949	1
80	BAC27NEL0187	..DECAL- PLACARD CONTENT: 1	121503 904949	1
85	BAC27NEL0188	..DECAL- PLACARD CONTENT: 2	121503 904949	1
90	BAC27NEL0189	..DECAL- PLACARD CONTENT: 3	121503 904949	1
95	BAC27NEL0190	..DECAL- PLACARD CONTENT: 4	121503 904949	1
100	BAC27NEL0191	..DECAL- PLACARD CONTENT: 5	121503 904949	1
105	BAC27NFDE0070	..DECAL- PLACARD CONTENT: TB0064	121503 904949	2

MISSING ITEM NUMBERS NOT APPLICABLE

- ITEM NOT ILLUSTRATED

BOEING PROPRIETARY - Copyright © - Unpublished Work - See title page for details.

FIG ITEM	PART NUMBER	1 2 3 4 5 6 7 NOMENCLATURE	EFFECT FROM TO	UNITS PER ASSY
35				
110	BAC27NFDE0085	..DECAL-	121503	1
		PLACARD CONTENT:	904949	
		M01174		
125	233T2220-10	..CUP ASSY	121503	3
			904949	
130	BACS21Y35R	..STUD ASSY	121503	1
			904949	
135	BACS21Y37R	..STUD ASSY	121503	1
			904949	
140	BACS21Y33R	..STUD ASSY	121503	1
			904949	
145	BACS21Y36R	..STUD ASSY	121503	1
			904949	
150	1127700	..WASHER	121503	4
		SUPPLIER CODE:	904949	
		V60119		
		SPECIFICATION NUMBER:		
		BACW10X4		
		OPTIONAL PART:		
		2600LW		
		V71286		
155	012001-101	..SPACER-CRIMP	121503	16
		SUPPLIER CODE:	904949	
		V28277		
160	350-1	..SPACER-	121503	20
		SUPPLIER CODE:	904949	
		V28277		
165	VNS1924CA1-8	..STUD-	121503	1
		SUPPLIER CODE:	904949	
		V5M902		
		SPECIFICATION NUMBER:		
		BACS53B1EA1		
		OPTIONAL PART:		
		VNS1924CA3-1-8		
		V92215		
		BACS53B1EA2		
165	VNS1924CA2-8	..STUD-	121503	1
		SUPPLIER CODE:	904949	
		V5M902		
		SPECIFICATION NUMBER:		
		BACS53B1EA2		
		OPTIONAL PART:		
		VNS1924CA3-2-8		
		V92215		
		BACS53B1EA1		
170	233T2218-5	..FOOTREST ASSY	121503	1
			904949	

MISSING ITEM NUMBERS NOT APPLICABLE

— ITEM NOT ILLUSTRATED

BOEING PROPRIETARY - Copyright © - Unpublished Work - See title page for details.

FIG ITEM	PART NUMBER	1 2 3 4 5 6 7 NOMENCLATURE	EFFECT FROM TO	UNITS PER ASSY
35				
		ATTACHING PARTS		
- 175	NAS514P1032-24	..SCREW	121503 904949	2
		-------*-------		
180	MS21209F1-30	...INSERT	121503 904949	2
185	233T2218-7	...FOOTREST	121503 904949	1
190	BACC49A1	..CLAMP SUPPLIER CODE: V09922 SPECIFICATION NUMBER: BACC49A1 OPTIONAL PART: FAB278 V15805 H28-1 V34941 UP103 V6E102	121503 904949	4
195	H21-1	..SPACER SUPPLIER CODE: V34941 SPECIFICATION NUMBER: BACS18AR1 OPTIONAL PART: FAB276A V15805 YHLZ1C2 V09922	121503 904949	2
200	233N2225-62	..PANEL ASSY- POSITION DATA: FWD	121503 904949	1
		ATTACHING PARTS		
- 205	NAS514P832-8	..SCREW	121503 904949	8
		-------*-------		
210	GR1003	...NUT-INSERT SUPPLIER CODE: V0625B	121503 904949	6
215	233N2225-49	...SHIM	121503 904949	1
220	233N2225-64	...BACKPLATE- ALTERED FROM PART NUMBER: 233N2241-1	121503 904949	1
225	233N2225-63	...FRAME ASSY- ALTERED FROM PART NUMBER: 233N2229-1	121503 904949	1

MISSING ITEM NUMBERS NOT APPLICABLE

- ITEM NOT ILLUSTRATED

BOEING PROPRIETARY - Copyright © - Unpublished Work - See title page for details.

FIG ITEM	PART NUMBER	1 2 3 4 5 6 7 NOMENCLATURE	EFFECT FROM TO	UNITS PER ASSY
35				
- 500	286N0101-002	WIRE BUNDLE ASSY	121503 904949	RF
505	BACC45FN20-41P6	.CONNECTOR- ELECTRICAL EQUIP NUMBER: D40209J WIRING DIAGRAM REF: 331651	121503 904949	1
510	BACC45FN16-24P8	.CONNECTOR- ELECTRICAL EQUIP NUMBER: D40427J WIRING DIAGRAM REF: 341611	121503 904949	1
515	BACC45FN16-24P6	.CONNECTOR- ELECTRICAL EQUIP NUMBER: D40677J WIRING DIAGRAM REF: 331651	121503 904949	1
- 550	286N0001-002	WIRE BUNDLE ASSY- REWORKED BY ALERT SB: 34A0222	121503 904949	RF
555	BACC45FT20D41S6	.CONNECTOR- ELECTRICAL EQUIP NUMBER: D40209P WIRING DIAGRAM REF: 331621	121503 904949	1
560	BACC45FT16D24S8	.CONNECTOR- ELECTRICAL EQUIP NUMBER: D40427P WIRING DIAGRAM REF: 344611	121503 904949	1
565	BACC45FT16A24S6	.CONNECTOR- ELECTRICAL EQUIP NUMBER: D40677P WIRING DIAGRAM REF: 331651	121503 904949	1

MISSING ITEM NUMBERS NOT APPLICABLE

- ITEM NOT ILLUSTRATED

BOEING PROPRIETARY - Copyright © - Unpublished Work - See title page for details.

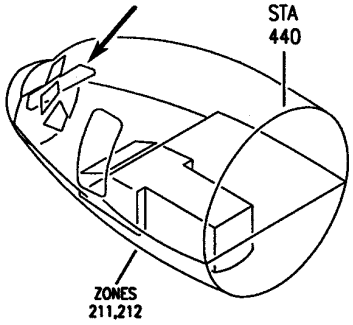

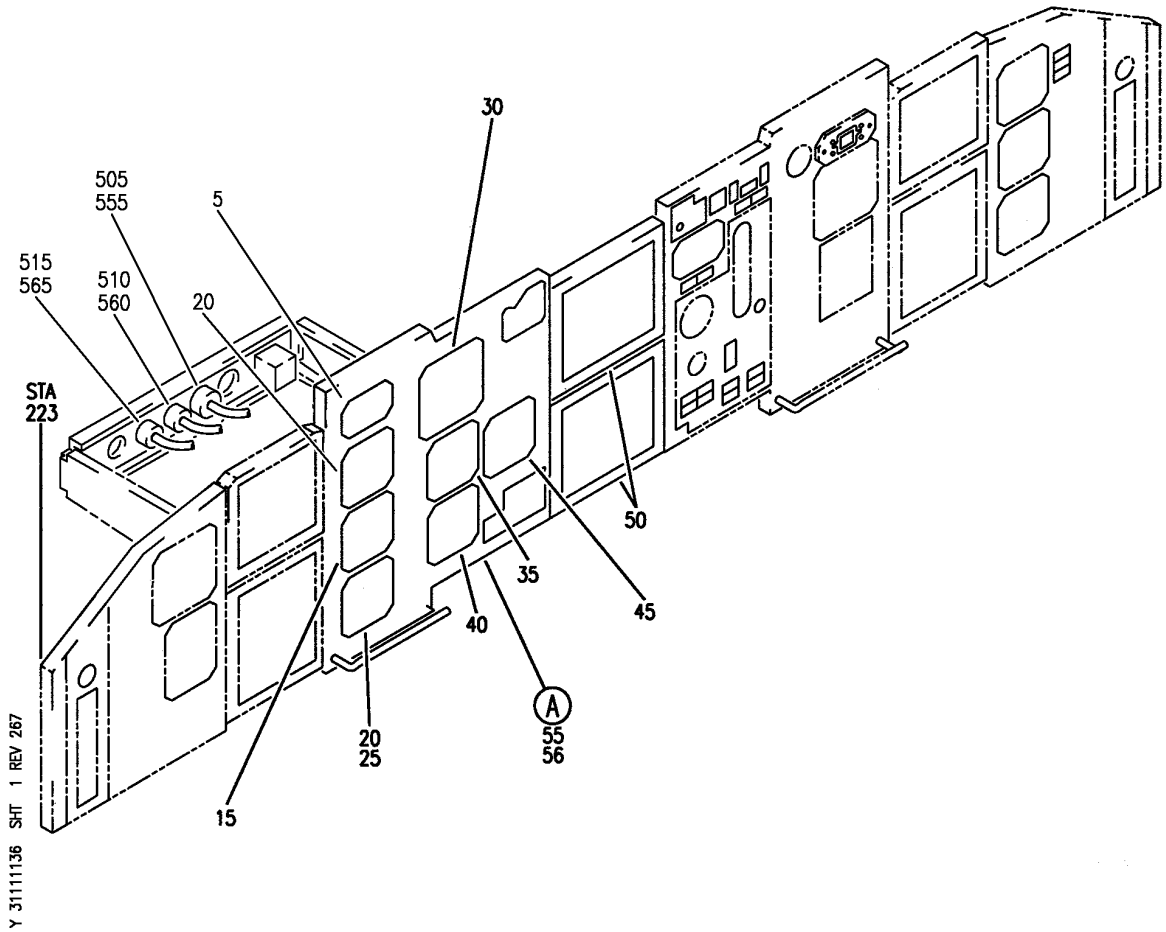

PANEL INSTL-P1-3 (CAPTAIN'S INSTRUMENT PANEL ONLY)
FIGURE 36 (SHEET 1)

BOEING PROPRIETARY - Copyright © - Unpublished Work - See title page for details.

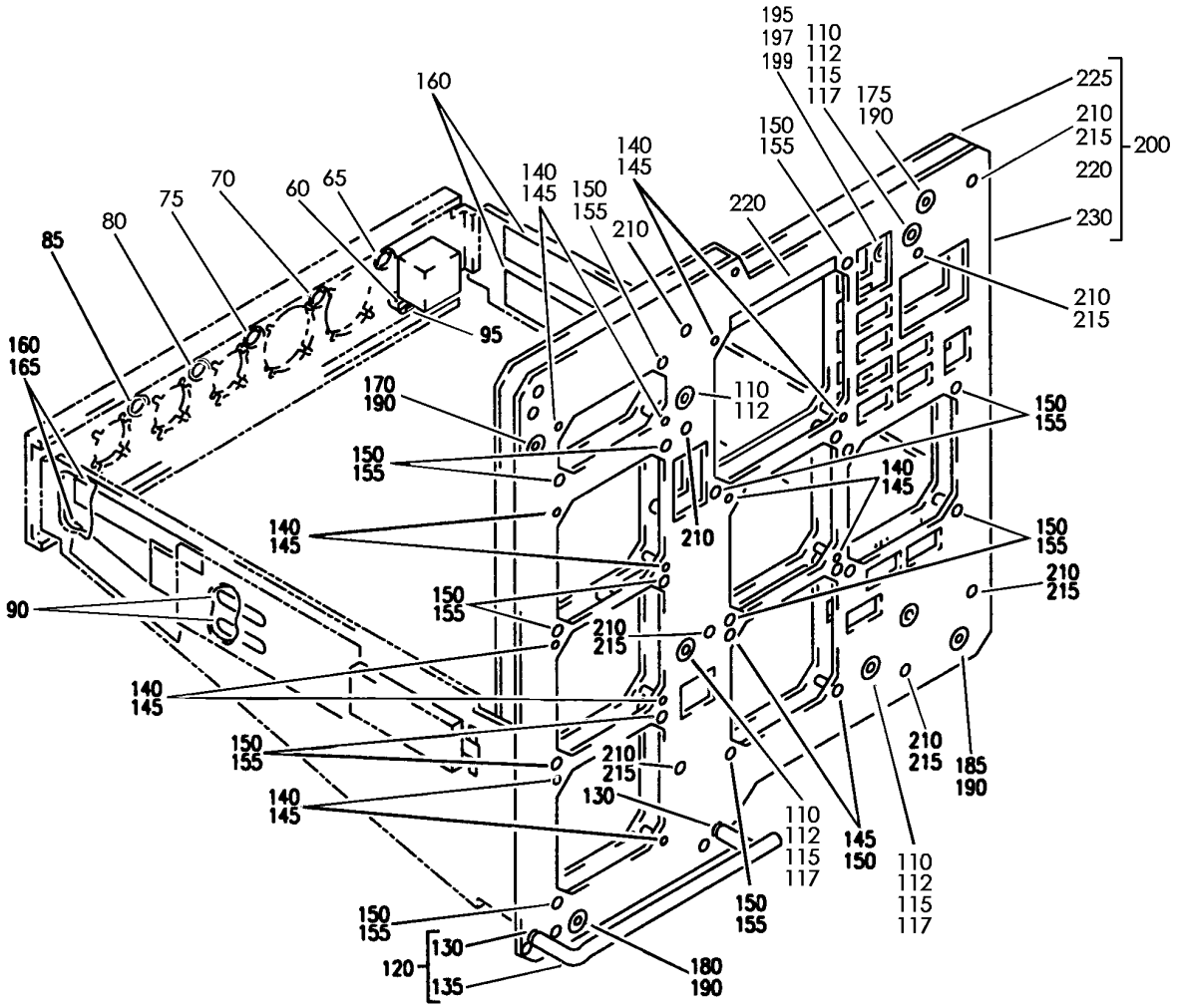

Y 31111136 SHT 2 REV 271

PANEL INSTL-P1-3 (CAPTAIN'S INSTRUMENT PANEL ONLY)
FIGURE 36 (SHEET 2)

BOEING PROPRIETARY - Copyright © - Unpublished Work - See title page for details.

FIG ITEM	PART NUMBER	1 2 3 4 5 6 7 NOMENCLATURE	EFFECT FROM TO	UNITS PER ASSY
36				
		PANEL INSTL-P1-3	002004	
		(CAPTAIN'S INSTRUMENT	006010	
		PANEL ONLY)	107107	
			950999	
- 1	233N2101-1	PANEL INSTL-P1-3	002004	RF
		(CAPTAIN'S INSTRUMENT	006010	
		PANEL ONLY)	107107	
		VARIABLE DRAWING REF:	950999	
		233N2101-5004		
		233N2101-5037		
		233N2101-5039		
		233N2101-5041		
		FOR NHA/OTHER SYS DET SEE:		
		25-10-00-05A		
5	622-5374-002	.INDICATOR ASSY-AUTOLAND	002004	RF
		STATUS	006010	
		SUPPLIER CODE:	107107	
		V4V792	950999	
		SPECIFICATION NUMBER:		
		S241T120-1		
		ELECTRICAL EQUIP NUMBER:		
		N00070		
		COMPONENT MAINT MANUAL REF:		
		22-14-70		
		FOR BREAKDOWN SEE:		
		22-14-01-01		
10	4039892-904	.INDICATOR ASSY-ALTM	107107	RF
		SUPPLIER CODE:	950999	
		V58960		
		SPECIFICATION NUMBER:		
		S231T101-1		
		ELECTRICAL EQUIP NUMBER:		
		N00008		
		COMPONENT MAINT MANUAL REF:		
		34-13-08		
		QUALIFIED I/W DATA:		
		INTERCHANGEABLE AS A		
		SHIPSET		
		FOR BREAKDOWN SEE:		
		34-13-01-01		

MISSING ITEM NUMBERS NOT APPLICABLE

- ITEM NOT ILLUSTRATED

BOEING PROPRIETARY - Copyright © - Unpublished Work - See title page for details.

FIG ITEM	PART NUMBER	1 2 3 4 5 6 7 NOMENCLATURE	EFFECT FROM TO	UNITS PER ASSY
36				
10	4039892-907	.INDICATOR ASSY-ALTM SUPPLIER CODE: V58960 SPECIFICATION NUMBER: S231T101-4 ELECTRICAL EQUIP NUMBER: N00008 COMPONENT MAINT MANUAL REF: 34-13-08 FOR BREAKDOWN SEE: 34-13-01-01	002004 006010	RF
15	4039893-902	.INDICATOR-VERT SPEED SUPPLIER CODE: V58960 SPECIFICATION NUMBER: S231T102-1 ELECTRICAL EQUIP NUMBER: N00009 COMPONENT MAINT MANUAL REF: 34-13-07 FOR BREAKDOWN SEE: 34-22-06-03	002004 006010 107107 952999	RF
15	066-50002-8103	.INDICATOR-VERT SPEED SUPPLIER CODE: V27194 ELECTRICAL EQUIP NUMBER: N0009 COMPONENT MAINT MANUAL REF: 34-45-25 POST AIRLINE MOD: PCR83 VALP	950951	RF

MISSING ITEM NUMBERS NOT APPLICABLE

– ITEM NOT ILLUSTRATED

BOEING PROPRIETARY - Copyright © - Unpublished Work - See title page for details.

	FIG ITEM	PART NUMBER	1 2 3 4 5 6 7 NOMENCLATURE	EFFECT FROM TO	UNITS PER ASSY
	36				
	20	65806-002-1	.CLOCK ASSY- SUPPLIER CODE: VF0216 SPECIFICATION NUMBER: S231T120-1 ELECTRICAL EQUIP NUMBER: N00002 COMPONENT MAINT MANUAL REF: 31-25-01 QUALIFIED I/W DATA: 2610-08-1(60B00303-107) I/W 65806-002-1(S231T120-1) IN SHIPSETS, FOR ALL FMC EXCEPT S242T102-451 WITH S/W PS4052970-95X, WHERE X CAN BE ANY VALUE, AND S242T102-455. FOR BREAKDOWN SEE: 31-25-01-01	002004 107107 952952	RF
R	20	2610-08-1	.CLOCK ASSY- SUPPLIER CODE: V52013 FUNCTIONAL DESCRIPTION: DIGITAL ELECTRONIC CHRONOMETER, SHOWS ELAPSED TIME, CHRONOGRAPH TIME, DATE AND GREENWICH MEAN TIME. SPECIFICATION NUMBER: 60B00303-107 ELECTRICAL EQUIP NUMBER: N00002 COMPONENT MAINT MANUAL REF: 31-21-08 QUALIFIED I/W DATA: 2600-06-1 I/W 2610-08-1 SUBJECT TO CUSTOMER PREFERENCE 2610-08-1(60B00303-107) I/W 65806-002-1(S231T120-1) IN SHIPSETS, FOR ALL FMC EXCEPT S242T102-451 WITH S/W PS4052970-95X, WHERE X CAN BE ANY VALUE, AND S242T102-455. FOR BREAKDOWN SEE: 31-25-01-01	006010 950951 953999	RF

MISSING ITEM NUMBERS NOT APPLICABLE

– ITEM NOT ILLUSTRATED

BOEING PROPRIETARY - Copyright © - Unpublished Work - See title page for details.

FIG ITEM	PART NUMBER	1 2 3 4 5 6 7 NOMENCLATURE	EFFECT FROM TO	UNITS PER ASSY
36				
20	2600-06-1	.CLOCK ASSY- SUPPLIER CODE: V52013 ELECTRICAL EQUIP NUMBER: N00002 COMPONENT MAINT MANUAL REF: 31-20-01 QUALIFIED I/W DATA: 2600-06-1 I/W 2610-08-1 SUBJECT TO CUSTOMER PREFERENCE. FOR BREAKDOWN SEE: 31-25-01-01	002004 107107 952952	RF
30	H150AKM	.INDICATOR ASSY-STBY ATTITUDE SUPPLIER CODE: VF6306 SPECIFICATION NUMBER: S231T110-5 ELECTRICAL EQUIP NUMBER: N00020 COMPONENT MAINT MANUAL REF: 34-23-80 FOR BREAKDOWN SEE: 34-24-01-01	002004 006010 107107 950999	RF
30	H150AKM1	.INDICATOR ASSY-STBY ATTITUDE SUPPLIER CODE: VF6306 SPECIFICATION NUMBER: S231T110-6 ELECTRICAL EQUIP NUMBER: N00020 COMPONENT MAINT MANUAL REF: 34-23-80	002004 006010 107107 950999	RF
35	A3615710067	.INDICATOR-STBY AIRSPEED SUPPLIER CODE: V89944 SPECIFICATION NUMBER: S231T112-1 ELECTRICAL EQUIP NUMBER: N00022 COMPONENT MAINT MANUAL REF: 34-13-03	002004 006010 107107 950999	RF

MISSING ITEM NUMBERS NOT APPLICABLE

– ITEM NOT ILLUSTRATED

BOEING PROPRIETARY - Copyright © - Unpublished Work - See title page for details.

FIG ITEM	PART NUMBER	1 2 3 4 5 6 7 NOMENCLATURE	EFFECT FROM TO	UNITS PER ASSY
36				
40	LK35-1	.INDICATOR ASSY-STBY ALTM SUPPLIER CODE: VS4276 SPECIFICATION NUMBER: S231T113-1 ELECTRICAL EQUIP NUMBER: N00023 COMPONENT MAINT MANUAL REF: 34-13-02 QUALIFIED I/W DATA: LK35-9 I/W LK35-1 SUBJECT TO CUSTOMER PREFERENCE OF RANGE LIMIT FOR THE BARO CORRECTION RESOLVER OUTPUT. FOR BREAKDOWN SEE: 34-13-06-01	107107	RF
40	LK35-2	.INDICATOR ASSY-STBY ALTM SUPPLIER CODE: VS4276 SPECIFICATION NUMBER: S231T113-2 ELECTRICAL EQUIP NUMBER: N00023 COMPONENT MAINT MANUAL REF: 34-13-02 FOR BREAKDOWN SEE: 34-13-06-01	002004 006010 950999	RF
40	A4619710001	.INDICATOR ASSY-STBY ALTM SUPPLIER CODE: V89944 SPECIFICATION NUMBER: S231T111-1 ELECTRICAL EQUIP NUMBER: N00023 COMPONENT MAINT MANUAL REF: 34-13-06 FOR BREAKDOWN SEE: 34-13-06-01	002004 006010 950999	RF

MISSING ITEM NUMBERS NOT APPLICABLE

– ITEM NOT ILLUSTRATED

BOEING PROPRIETARY - Copyright © - Unpublished Work - See title page for details.

FIG ITEM	PART NUMBER	1 2 3 4 5 6 7 NOMENCLATURE	EFFECT FROM TO	UNITS PER ASSY
36				
45	404EED1-1	.INDICATOR ASSY-STBY ENG SUPPLIER CODE: VK5294 SPECIFICATION NUMBER: S231N001-7 ELECTRICAL EQUIP NUMBER: N10016 COMPONENT MAINT MANUAL REF: 77-40-03 FOR BREAKDOWN SEE: 77-41-01-02	002004 006010 107107 950999	RF
50	622-5046-101	.INDICATOR ASSY-ENG INDICATING AND CREW ALERTING SYS MULTICOLOR DISPLAY UNIT SUPPLIER CODE: V4V792 SPECIFICATION NUMBER: S242T404-602 ELECTRICAL EQUIP NUMBER: N10013 N10014 COMPONENT MAINT MANUAL REF: 34-22-71 FOR BREAKDOWN SEE: 31-41-01-01	002004 006010 107107 950999	RF
50	622-7999-002	.INDICATOR ASSY-ENG INDICATING AND CREW ALERTING SYS MULTICOLOR DISPLAY UNIT SUPPLIER CODE: V4V792 FUNCTIONAL DESCRIPTION: CATHODE RAY TUBE USED AS AN HSI TO DISPLAY INERTIAL REFERENCE SYSTEM GENERATED TRACK AND HEADING AND AS A DISPLAY UNIT FOR THE EICAS SYSTEM SPECIFICATION NUMBER: S242T404-610 ELECTRICAL EQUIP NUMBER: N10013 N10014 COMPONENT MAINT MANUAL REF: 34-22-61 FOR BREAKDOWN SEE: 31-41-01-01	002004 006010 107107 950999	RF

MISSING ITEM NUMBERS NOT APPLICABLE

– ITEM NOT ILLUSTRATED

BOEING PROPRIETARY - Copyright © - Unpublished Work - See title page for details.

FIG ITEM	PART NUMBER	1 2 3 4 5 6 7 NOMENCLATURE	EFFECT FROM TO	UNITS PER ASSY
36				
50	622-7999-003	.INDICATOR ASSY-ENG INDICATING AND CREW ALERTING SYS MULTICOLOR DISPLAY UNIT SUPPLIER CODE: V4V792 SPECIFICATION NUMBER: S242T404-611 MISCELLANEOUS DATA: 622-7999-013 IS IDENTICAL TO 622-7999-003 EXCEPT THAT THE BEZEL COLOR IS GRAY INSTEAD OF BROWN. 622-7999-013 IS INTERCHANGEABLE WITH 622-7999-003 SUBJECT TO CUSTOMER PREFERENCE SEE SPARES DWG. 242N5002 FOR 757 INTERCHANGEABILITY FOR 767 SEE 242T4213 ELECTRICAL EQUIP NUMBER: N10013 N10014 COMPONENT MAINT MANUAL REF: 34-22-60 FOR BREAKDOWN SEE: 31-41-01-01	002004 006010 107107 950999	RF
50	622-5046-100	.INDICATOR ASSY-ENG INDICATING AND CREW ALERTING SYS MULTICOLOR DISPLAY UNIT SUPPLIER CODE: V4V792 SPECIFICATION NUMBER: S242T404-601 ELECTRICAL EQUIP NUMBER: N10013 N10014 COMPONENT MAINT MANUAL REF: 34-22-71 FOR BREAKDOWN SEE: 31-41-01-01	002004 006010 107107 950999	RF

MISSING ITEM NUMBERS NOT APPLICABLE

– ITEM NOT ILLUSTRATED

BOEING PROPRIETARY - Copyright © - Unpublished Work - See title page for details.

FIG ITEM	PART NUMBER	1 2 3 4 5 6 7 NOMENCLATURE	EFFECT FROM TO	UNITS PER ASSY
36				
55	233N2221-51	.MODULE ASSY-	002004	1
		FOR OTHER SYS DETAILS SEE:	006010	
		11-31-01-01	950999	
		22-14-01-01		
		22-34-51-01		
		29-21-55-01		
		31-25-01-01		
		31-41-52-01		
		31-51-52-01		
		32-41-52-01		
		32-42-55-01		
		33-13-57-01		
		33-16-52-01		
		34-13-01-01		
		34-16-51-01		
		34-22-06-03		
		34-24-01-01		
		34-32-00-01		
		34-46-51-01		
		34-61-01-09		
		77-41-01-02		
		79-33-51-02		
56	233N2221-59	.MODULE ASSY-	107107	1
		FOR OTHER SYS DETAILS SEE:		
		11-31-01-01		
		22-14-01-01		
		22-34-51-01		
		29-21-55-01		
		31-25-01-01		
		31-41-52-01		
		31-51-52-01		
		32-41-52-01		
		32-42-55-01		
		33-13-57-01		
		33-16-52-01		
		34-13-01-01		
		34-16-51-01		
		34-22-06-03		
		34-24-01-01		
		34-32-00-01		
		34-46-51-01		
		34-61-01-09		
		77-41-01-02		
		79-33-51-02		
60	BAC27NEL0339	..DECAL-	002004	1
		PLACARD CONTENT:	006010	
		AP0103	107107	
			950999	

MISSING ITEM NUMBERS NOT APPLICABLE

— ITEM NOT ILLUSTRATED

BOEING PROPRIETARY - Copyright © - Unpublished Work - See title page for details.

FIG ITEM	PART NUMBER	1 2 3 4 5 6 7 NOMENCLATURE	EFFECT FROM TO	UNITS PER ASSY
36				
65	BAC27NEL0187	..DECAL- PLACARD CONTENT: 1	002004 006010 107107 950999	1
70	BAC27NEL0188	..DECAL- PLACARD CONTENT: 2	002004 006010 107107 950999	1
75	BAC27NEL0189	..DECAL- PLACARD CONTENT: 3	002004 006010 107107 950999	1
80	BAC27NEL0190	..DECAL- PLACARD CONTENT: 4	002004 006010 107107 950999	1
85	BAC27NEL0191	..DECAL- PLACARD CONTENT: 5	002004 006010 107107 950999	1
90	BAC27NFDE0070	..DECAL- PLACARD CONTENT: TB0064	002004 006010 107107 950999	2
95	BAC27NFDE0085	..DECAL- PLACARD CONTENT: M01174	002004 006010 107107 950999	1
115	233T2220-10	..CUP ASSY	002004 006010 107107 950999	3
117	233T2220-12	...SEAL	002004 006010 107107 950999	3
120	233T2218-5	..FOOTREST ASSY	002004 006010 107107 950999	1
		ATTACHING PARTS		
- 125	NAS514P1032-24	..SCREW	002004 006010 107107 950999	2
		-------*-------		

MISSING ITEM NUMBERS NOT APPLICABLE

- ITEM NOT ILLUSTRATED

BOEING PROPRIETARY - Copyright © - Unpublished Work - See title page for details.

	FIG ITEM	PART NUMBER	1 2 3 4 5 6 7 NOMENCLATURE	EFFECT FROM TO	UNITS PER ASSY
	36				
	130	MS21209F1-30	...INSERT	002004 006010 107107 950999	2
	135	233T2218-7	...FOOTREST	002004 006010 107107 950999	1
	145	012001-101	..SPACER-CRIMP SUPPLIER CODE: V28277	002004 006010 107107 950999	14
	155	350-1	..SPACER- SUPPLIER CODE: V28277	002004 006010 107107 950999	18
R R R R	160	BACC49A1	..CLAMP	002004 006010 107107 950999	4
	165	H21-1	..SPACER SUPPLIER CODE: V34941 SPECIFICATION NUMBER: BACS18AR1 OPTIONAL PART: FAB276A V15805 YHLZ1C2 V09922	002004 006010 107107 950999	2
R	170	BACS21Y35R	..STUD ASSY	107107	1
R R R	170	BACS21EE35R	..STUD ASSY	002004 006010 950999	1
R	175	BACS21Y37R	..STUD ASSY	107107	1
R R R	175	BACS21EE37R	..STUD ASSY	002004 006010 950999	1
R	180	BACS21Y33R	..STUD ASSY	107107	1
R R R	180	BACS21EE33R	..STUD ASSY	002004 006010 950999	1
R	185	BACS21Y36R	..STUD ASSY	107107	1
R R R	185	BACS21EE36R	..STUD ASSY	002004 006010 950999	1

MISSING ITEM NUMBERS NOT APPLICABLE

– ITEM NOT ILLUSTRATED

BOEING PROPRIETARY - Copyright © - Unpublished Work - See title page for details.

FIG ITEM	PART NUMBER	1 2 3 4 5 6 7 NOMENCLATURE	EFFECT FROM TO	UNITS PER ASSY
36				
190	1127700	..WASHER SUPPLIER CODE: V60119 SPECIFICATION NUMBER: BACW10X4 OPTIONAL PART: 2600LW V71286	002004 006010 107107 950999	4
195	VNS1924CA1-8	..STUD- SUPPLIER CODE: V5M902 SPECIFICATION NUMBER: BACS53B1EA1 OPTIONAL PART: VNS1924CA3-1-8 V92215 BACS53B1EA2	002004 006010 107107 950999	1
195	VNS1924CA2-8	..STUD- SUPPLIER CODE: V5M902 SPECIFICATION NUMBER: BACS53B1EA2 OPTIONAL PART: VNS1924CA3-2-8 V92215 BACS53B1EA1	002004 006010 107107 950999	1
200	233N2225-53	..PANEL ASSY-	002004 006010 107107 950999	1
		ATTACHING PARTS		
- 205	NAS514P832-8	..SCREW	002004 006010 107107 950999	6
		-------*-------		
215	NAS1330A06K106	...NUT- OPTIONAL PART: GR1003 V0625B	002004 006010 107107 950999	6
215	GR1003	...NUT-INSERT SUPPLIER CODE: V0625B OPTIONAL PART: NAS1330A06K106	002004 006010 107107 950999	6
220	233N2225-49	...SHIM	002004 006010 107107 950999	1

MISSING ITEM NUMBERS NOT APPLICABLE

- ITEM NOT ILLUSTRATED

BOEING PROPRIETARY - Copyright © - Unpublished Work - See title page for details.

FIG ITEM	PART NUMBER	1 2 3 4 5 6 7 NOMENCLATURE	EFFECT FROM TO	UNITS PER ASSY
36				
225	233N2225-55	...BACKPLATE- ALTERED FROM PART NUMBER: 233N2241-1	002004 006010 107107 950999	1
230	233N2225-54	...FRAME ASSY-	002004 006010 107107 950999	1
- 500	286N0101-003	WIRE BUNDLE ASSY	107107	RF
- 500	286N0101-007	WIRE BUNDLE ASSY-	002004 006010 950999	RF
505	BACC45FN20-41P6	.CONNECTOR- ELECTRICAL EQUIP NUMBER: D40209J WIRING DIAGRAM REF: 331651	002004 006010 107107 950999	1
510	BACC45FN16-24P8	.CONNECTOR- ELECTRICAL EQUIP NUMBER: D40427J WIRING DIAGRAM REF: 341611	002004 006010 107107 950999	1
515	BACC45FN16-24P6	.CONNECTOR- ELECTRICAL EQUIP NUMBER: D40677J WIRING DIAGRAM REF: 331651	002004 006010 107107 950999	1
- 550	286N0001-003	WIRE BUNDLE ASSY- REWORKED BY ALERT SB: 34A0222	107107	RF
- 550	286N0001-005	WIRE BUNDLE ASSY- REWORKED BY ALERT SB: 34A0222	002004 006010 950999	RF
555	BACC45FT20D41S6	.CONNECTOR- ELECTRICAL EQUIP NUMBER: D40209P WIRING DIAGRAM REF: 331621	002004 006010 107107 950999	1
560	BACC45FT16D24S8	.CONNECTOR- ELECTRICAL EQUIP NUMBER: D40427P WIRING DIAGRAM REF: 344611	002004 006010 107107 950999	1
565	BACC45FT16A24S6	.CONNECTOR- ELECTRICAL EQUIP NUMBER: D40677P WIRING DIAGRAM REF: 331651	002004 006010 107107 950999	1

MISSING ITEM NUMBERS NOT APPLICABLE

– ITEM NOT ILLUSTRATED

BOEING PROPRIETARY - Copyright © - Unpublished Work - See title page for details.

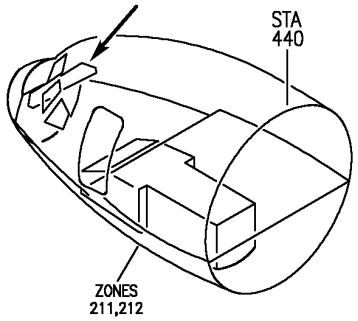

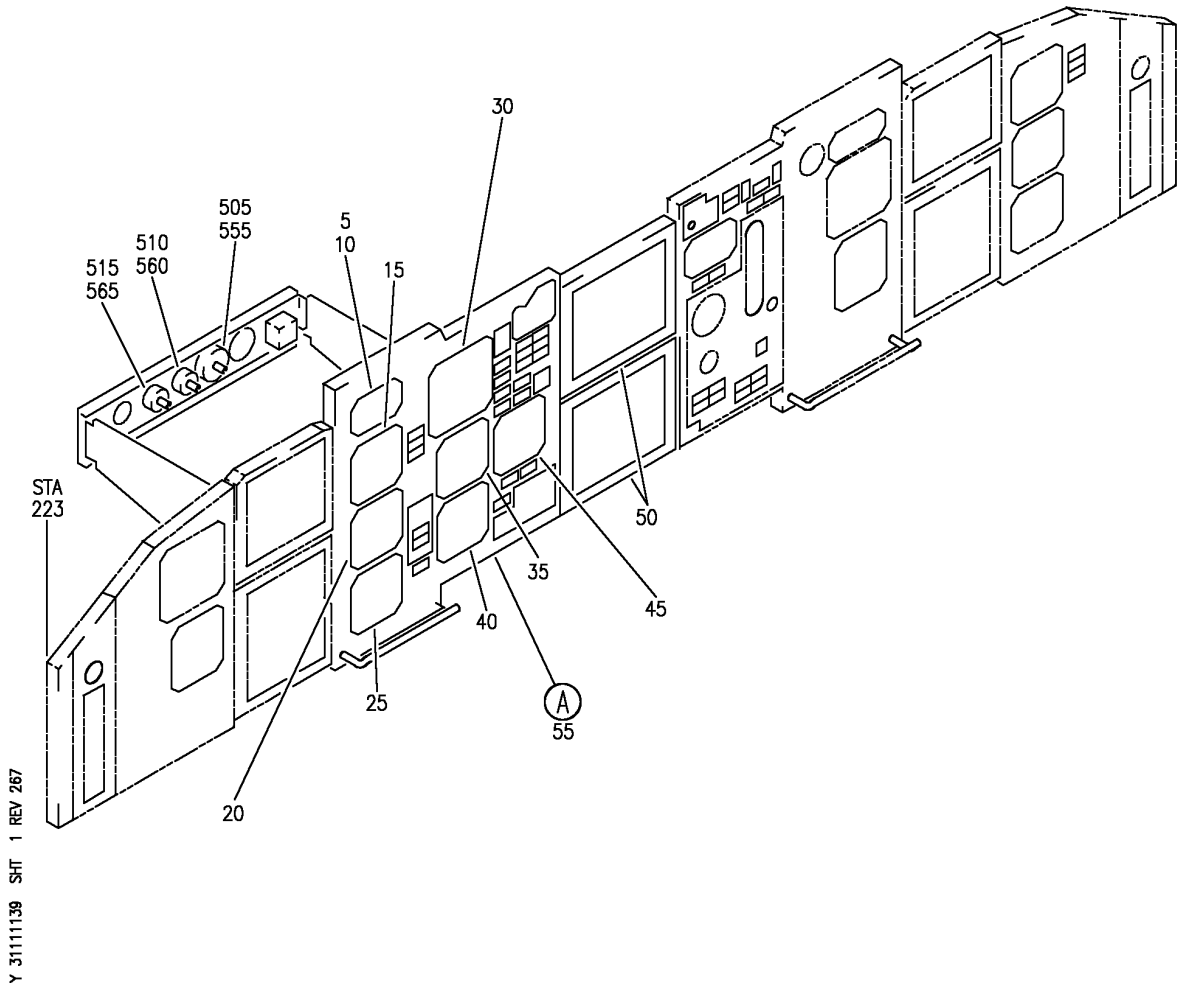

PANEL INSTL-P1-3 (CAPTAIN'S INSTRUMENT PANEL ONLY)
FIGURE 39 (SHEET 1)

BOEING PROPRIETARY - Copyright © - Unpublished Work - See title page for details.

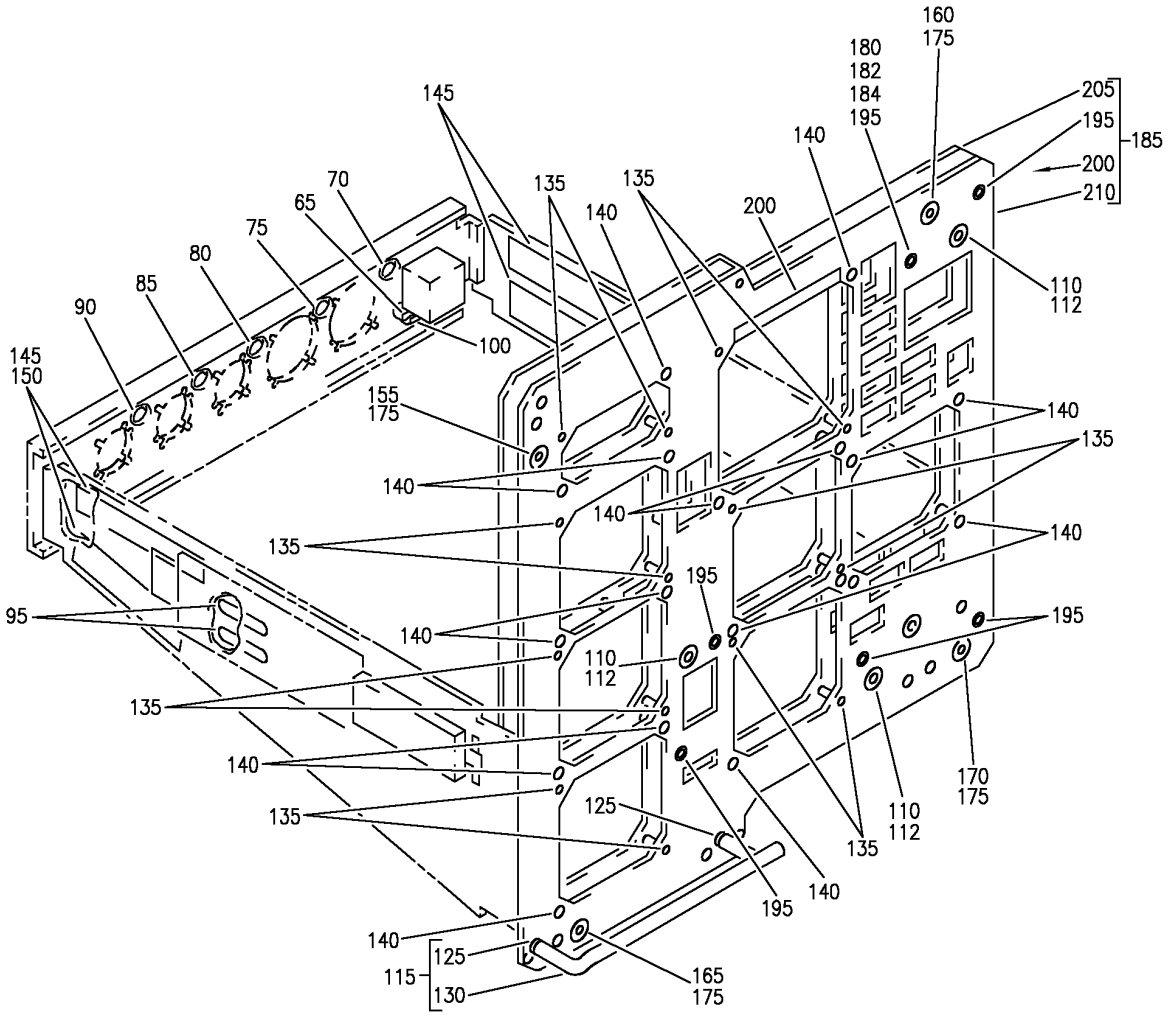

PANEL INSTL-P1-3 (CAPTAIN'S INSTRUMENT PANEL ONLY)
FIGURE 39 (SHEET 2)

BOEING PROPRIETARY - Copyright © - Unpublished Work - See title page for details.

FIG ITEM	PART NUMBER	1 2 3 4 5 6 7 NOMENCLATURE	EFFECT FROM TO	UNITS PER ASSY
39				
		PANEL INSTL-P1-3 (CAPTAIN'S INSTRUMENT PANEL ONLY)	011100	
- 1	233N2101-1	PANEL INSTL-P1-3 (CAPTAIN'S INSTRUMENT PANEL ONLY) VARIABLE DRAWING REF: 233N2101-5039 FOR NHA/OTHER SYS DET SEE: 25-10-00-05A	011100	RF
5	622-5374-002	.INDICATOR ASSY-AUTOLAND STATUS SUPPLIER CODE: V4V792 SPECIFICATION NUMBER: S241T120-1 ELECTRICAL EQUIP NUMBER: N00070 COMPONENT MAINT MANUAL REF: 22-14-70 FOR BREAKDOWN SEE: 22-14-01-02	011100	RF
15	4039892-907	.INDICATOR ASSY-ALTM SUPPLIER CODE: V58960 SPECIFICATION NUMBER: S231T101-4 ELECTRICAL EQUIP NUMBER: N00008 COMPONENT MAINT MANUAL REF: 34-13-08 FOR BREAKDOWN SEE: 34-13-01-02	011100	RF
20	4039893-902	.INDICATOR-VERT SPEED SUPPLIER CODE: V58960 SPECIFICATION NUMBER: S231T102-1 ELECTRICAL EQUIP NUMBER: N00009 COMPONENT MAINT MANUAL REF: 34-13-07 FOR BREAKDOWN SEE: 34-22-06-02	011100	RF

MISSING ITEM NUMBERS NOT APPLICABLE

- ITEM NOT ILLUSTRATED

BOEING PROPRIETARY - Copyright © - Unpublished Work - See title page for details.

	FIG ITEM	PART NUMBER	1 2 3 4 5 6 7 NOMENCLATURE	EFFECT FROM TO	UNITS PER ASSY
	39				
R	25	2610-08-1	.CLOCK ASSY-	011100	RF
R			SUPPLIER CODE:		
R			V52013		
R			FUNCTIONAL DESCRIPTION:		
R			DIGITAL ELECTRONIC		
R			CHRONOMETER, SHOWS		
R			ELAPSED TIME,		
R			CHRONOGRAPH TIME, DATE		
R			AND GREENWICH MEAN TIME.		
R			SPECIFICATION NUMBER:		
R			60B00303-107		
R			ELECTRICAL EQUIP NUMBER:		
R			N00002		
R			COMPONENT MAINT MANUAL REF:		
R			31-21-08		
R			QUALIFIED I/W DATA:		
R			2600-06-1 I/W		
R			2610-08-1 SUBJECT TO		
R			CUSTOMER PREFERENCE		
R			2610-08-1(60B00303-107)		
R			I/W		
R			65806-002-1(S231T120-1)		
R			IN SHIPSETS, FOR ALL FMC		
R			EXCEPT S242T102-451 WITH		
R			S/W PS4052970-95X, WHERE		
R			X CAN BE ANY VALUE, AND		
R			S242T102-455.		
R			FOR BREAKDOWN SEE:		
R			31-25-01-02		
	30	H150AKM1	.INDICATOR ASSY-STBY	011100	RF
			ATTITUDE		
			SUPPLIER CODE:		
			VF6306		
			SPECIFICATION NUMBER:		
			S231T110-6		
			ELECTRICAL EQUIP NUMBER:		
			N00020		
			COMPONENT MAINT MANUAL REF:		
			34-23-80		
			FOR BREAKDOWN SEE:		
			34-24-01-02		

MISSING ITEM NUMBERS NOT APPLICABLE

– ITEM NOT ILLUSTRATED

BOEING PROPRIETARY - Copyright © - Unpublished Work - See title page for details.

FIG ITEM	PART NUMBER	1 2 3 4 5 6 7 NOMENCLATURE	EFFECT FROM TO	UNITS PER ASSY
39				
30	H150AKM	.INDICATOR ASSY-STBY ATTITUDE SUPPLIER CODE: VF6306 SPECIFICATION NUMBER: S231T110-5 ELECTRICAL EQUIP NUMBER: N00020 COMPONENT MAINT MANUAL REF: 34-23-80 FOR BREAKDOWN SEE: 34-24-01-02	011100	RF
35	A3615710067	.INDICATOR-STBY AIRSPEED SUPPLIER CODE: V89944 SPECIFICATION NUMBER: S231T112-1 ELECTRICAL EQUIP NUMBER: N00022 COMPONENT MAINT MANUAL REF: 34-13-03	011100	RF
40	LK35-2	.INDICATOR ASSY-STBY ALTM SUPPLIER CODE: VS4276 SPECIFICATION NUMBER: S231T113-2 ELECTRICAL EQUIP NUMBER: N00023 COMPONENT MAINT MANUAL REF: 34-13-02 FOR BREAKDOWN SEE: 34-13-06-01	011100	RF
40	A4619710001	.INDICATOR ASSY-STBY ALTM SUPPLIER CODE: V89944 SPECIFICATION NUMBER: S231T111-1 ELECTRICAL EQUIP NUMBER: N00023 COMPONENT MAINT MANUAL REF: 34-13-06 FOR BREAKDOWN SEE: 34-13-06-01	011100	RF

MISSING ITEM NUMBERS NOT APPLICABLE

– ITEM NOT ILLUSTRATED

BOEING PROPRIETARY - Copyright © - Unpublished Work - See title page for details.

FIG ITEM	PART NUMBER	1 2 3 4 5 6 7 NOMENCLATURE	EFFECT FROM TO	UNITS PER ASSY
39				
45	404EED1-1	.INDICATOR ASSY-STBY ENG SUPPLIER CODE: VK5294 SPECIFICATION NUMBER: S231N001-7 ELECTRICAL EQUIP NUMBER: N10016 COMPONENT MAINT MANUAL REF: 77-40-03 FOR BREAKDOWN SEE: 77-41-01-03	011100	RF
50	622-7999-003	.INDICATOR ASSY-ENG INDICATING AND CREW ALERTING SYS MULTICOLOR DISPLAY UNIT SUPPLIER CODE: V4V792 SPECIFICATION NUMBER: S242T404-611 MISCELLANEOUS DATA: 622-7999-013 IS IDENTICAL TO 622-7999-003 EXCEPT THAT THE BEZEL COLOR IS GRAY INSTEAD OF BROWN. 622-7999-013 IS INTERCHANGEABLE WITH 622-7999-003 SUBJECT TO CUSTOMER PREFERENCE SEE SPARES DWG. 242N5002 FOR 757 INTERCHANGEABILITY FOR 767 SEE 242T4213 ELECTRICAL EQUIP NUMBER: N10013 N10014 COMPONENT MAINT MANUAL REF: 34-22-60 FOR BREAKDOWN SEE: 31-41-01-01	011100	RF

MISSING ITEM NUMBERS NOT APPLICABLE

– ITEM NOT ILLUSTRATED

BOEING PROPRIETARY - Copyright © - Unpublished Work - See title page for details.

FIG ITEM	PART NUMBER	1 2 3 4 5 6 7 NOMENCLATURE	EFFECT FROM TO	UNITS PER ASSY
39				
50	622-5046-101	.INDICATOR ASSY-ENG INDICATING AND CREW ALERTING SYS MULTICOLOR DISPLAY UNIT SUPPLIER CODE: V4V792 SPECIFICATION NUMBER: S242T404-602 ELECTRICAL EQUIP NUMBER: N10013 N10014 COMPONENT MAINT MANUAL REF: 34-22-71 FOR BREAKDOWN SEE: 31-41-01-01	011100	RF
50	622-5046-100	.INDICATOR ASSY-ENG INDICATING AND CREW ALERTING SYS MULTICOLOR DISPLAY UNIT SUPPLIER CODE: V4V792 SPECIFICATION NUMBER: S242T404-601 ELECTRICAL EQUIP NUMBER: N10013 N10014 COMPONENT MAINT MANUAL REF: 34-22-71 FOR BREAKDOWN SEE: 31-41-01-01	011100	RF

MISSING ITEM NUMBERS NOT APPLICABLE

– ITEM NOT ILLUSTRATED

BOEING PROPRIETARY - Copyright © - Unpublished Work - See title page for details.

FIG ITEM	PART NUMBER	1 2 3 4 5 6 7 NOMENCLATURE	EFFECT FROM TO	UNITS PER ASSY
39				
50	622-7999-002	.INDICATOR ASSY-ENG INDICATING AND CREW ALERTING SYS MULTICOLOR DISPLAY UNIT SUPPLIER CODE: V4V792 FUNCTIONAL DESCRIPTION: CATHODE RAY TUBE USED AS AN HSI TO DISPLAY INERTIAL REFERENCE SYSTEM GENERATED TRACK AND HEADING AND AS A DISPLAY UNIT FOR THE EICAS SYSTEM SPECIFICATION NUMBER: S242T404-610 ELECTRICAL EQUIP NUMBER: N10013 N10014 COMPONENT MAINT MANUAL REF: 34-22-61 FOR BREAKDOWN SEE: 31-41-01-01	011100	RF
55	233N2221-301	.MODULE ASSY- COMPONENT MAINT MANUAL REF: 31-11-48 FOR OTHER SYS DETAILS SEE: 11-31-01-24 22-14-01-02 22-34-51-02 29-21-55-02 31-25-01-02 31-41-52-02 31-51-52-02 32-41-52-02 32-42-55-02 33-13-57-02 33-16-52-02 34-13-01-02 34-13-05-01 34-13-06-01 34-16-51-02 34-22-06-02 34-24-01-02 34-32-00-02 34-46-51-02 34-61-01-10 77-41-01-03 79-33-51-03	011100	1

MISSING ITEM NUMBERS NOT APPLICABLE

– ITEM NOT ILLUSTRATED

BOEING PROPRIETARY - Copyright © - Unpublished Work - See title page for details.

FIG ITEM	PART NUMBER	1 2 3 4 5 6 7 NOMENCLATURE	EFFECT FROM TO	UNITS PER ASSY
39				
- 60	233N2221-51	..MODULE ASSY	011100	RF
65	BAC27NEL0339	...DECAL-	011100	1
		PLACARD CONTENT:		
		AP0103		
70	BAC27NEL0187	...DECAL-	011100	1
		PLACARD CONTENT:		
		1		
75	BAC27NEL0188	...DECAL-	011100	1
		PLACARD CONTENT:		
		2		
80	BAC27NEL0189	...DECAL-	011100	1
		PLACARD CONTENT:		
		3		
85	BAC27NEL0190	...DECAL-	011100	1
		PLACARD CONTENT:		
		4		
90	BAC27NEL0191	...DECAL-	011100	1
		PLACARD CONTENT:		
		5		
95	BAC27NFDE0070	...DECAL-	011100	2
		PLACARD CONTENT:		
		TB0064		
100	BAC27NFDE0085	...DECAL-	011100	1
		PLACARD CONTENT:		
		M01174		
110	233T2220-10	...CUP ASSY	011100	3
112	233T2220-12	....SEAL	011100	3
115	233T2218-5	...FOOTREST ASSY	011100	1
		ATTACHING PARTS		
- 120	NAS514P1032-24	...SCREW	011100	2
		-------*-------		
125	MS21209F1-30	....INSERT	011100	2
130	233T2218-7	....FOOTREST	011100	1
135	012001-101	...SPACER-CRIMP	011100	14
		SUPPLIER CODE:		
		V28277		
140	350-1	...SPACER-	011100	18
		SUPPLIER CODE:		
		V28277		
R 145	BACC49A1	...CLAMP	011100	4

MISSING ITEM NUMBERS NOT APPLICABLE

- ITEM NOT ILLUSTRATED

BOEING PROPRIETARY - Copyright © - Unpublished Work - See title page for details.

	FIG ITEM	PART NUMBER	1 2 3 4 5 6 7 NOMENCLATURE	EFFECT FROM TO	UNITS PER ASSY
	39				
	150	H21-1	...SPACER SUPPLIER CODE: V34941 SPECIFICATION NUMBER: BACS18AR1 OPTIONAL PART: FAB276A V15805 YHLZ1C2 V09922	011100	2
R	155	BACS21EE35R	...STUD ASSY	011100	1
R	160	BACS21EE37R	...STUD ASSY	011100	1
R	165	BACS21EE33R	...STUD ASSY	011100	1
R	170	BACS21EE36R	...STUD ASSY	011100	1
	175	1127700	...WASHER SUPPLIER CODE: V60119 SPECIFICATION NUMBER: BACW10X4 OPTIONAL PART: 2600LW V71286	011100	4
	180	VNS1924CA1-8	...STUD- SUPPLIER CODE: V5M902 SPECIFICATION NUMBER: BACS53B1EA1 OPTIONAL PART: VNS1924CA3-1-8 V92215 BACS53B1EA2	011100	1
	180	VNS1924CA2-8	...STUD- SUPPLIER CODE: V5M902 SPECIFICATION NUMBER: BACS53B1EA2 OPTIONAL PART: VNS1924CA3-2-8 V92215 BACS53B1EA1	011100	1
	182	NAS1149D0316H	...WASHER	011100	1

MISSING ITEM NUMBERS NOT APPLICABLE

– ITEM NOT ILLUSTRATED

BOEING PROPRIETARY - Copyright © - Unpublished Work - See title page for details.

FIG ITEM	PART NUMBER	1 2 3 4 5 6 7 NOMENCLATURE	EFFECT FROM TO	UNITS PER ASSY
39				
184	BRH10C3D	...NUT	011100	1
		SUPPLIER CODE:		
		V52828		
		SPECIFICATION NUMBER:		
		BACN10JC3CD		
		OPTIONAL PART:		
		T6C1032JCD		
		V11815		
		NS202486-02		
		V80539		
		102LH9075-3W		
		V72962		
		H51650-3BAC		
		V15653		
185	233N2225-53	...PANEL ASSY-FWD	011100	1
		ATTACHING PARTS		
- 190	NAS514P832-8	...SCREW	011100	6
		-------*-------		
195	GR1003	....NUT-INSERT	011100	6
		SUPPLIER CODE:		
		V0625B		
		OPTIONAL PART:		
		NAS1330A06K106		
195	NAS1330A06K106	....NUT-	011100	6
		OPTIONAL PART:		
		GR1003		
		V0625B		
200	233N2225-49	....SHIM	011100	1
205	233N2225-55	....BACKPLATE-	011100	1
		ALTERED FROM PART NUMBER:		
		233N2241-1		
210	233N2225-54	....FRAME ASSY	011100	1
- 500	286N0101-007	WIRE BUNDLE ASSY	011100	RF
505	BACC45FN20-41P6	.CONNECTOR-	011100	1
		ELECTRICAL EQUIP NUMBER:		
		D40209J		
		WIRING DIAGRAM REF:		
		331651		
510	BACC45FN16-24P8	.CONNECTOR-	011100	1
		ELECTRICAL EQUIP NUMBER:		
		D40427J		
		WIRING DIAGRAM REF:		
		341611		
515	BACC45FN16-24P6	.CONNECTOR-	011100	1
		ELECTRICAL EQUIP NUMBER:		
		D40677J		
		WIRING DIAGRAM REF:		
		331651		

MISSING ITEM NUMBERS NOT APPLICABLE

- ITEM NOT ILLUSTRATED

BOEING PROPRIETARY - Copyright © - Unpublished Work - See title page for details.

FIG ITEM	PART NUMBER	1 2 3 4 5 6 7 NOMENCLATURE	EFFECT FROM TO	UNITS PER ASSY
39				
- 550	286N0001-005	WIRE BUNDLE ASSY- REWORKED BY ALERT SB: 34A0222	011100	RF
555	BACC45FT20D41S6	.CONNECTOR- ELECTRICAL EQUIP NUMBER: D40209P WIRING DIAGRAM REF: 331621	011100	1
560	BACC45FT16D24S8	.CONNECTOR- ELECTRICAL EQUIP NUMBER: D40427P WIRING DIAGRAM REF: 344611	011100	1
565	BACC45FT16A24S6	.CONNECTOR- ELECTRICAL EQUIP NUMBER: D40677P WIRING DIAGRAM REF: 331651	011100	1

MISSING ITEM NUMBERS NOT APPLICABLE

- ITEM NOT ILLUSTRATED

BOEING PROPRIETARY - Copyright © - Unpublished Work - See title page for details.

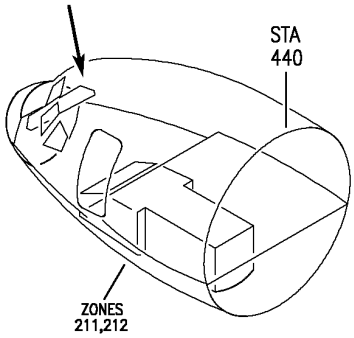

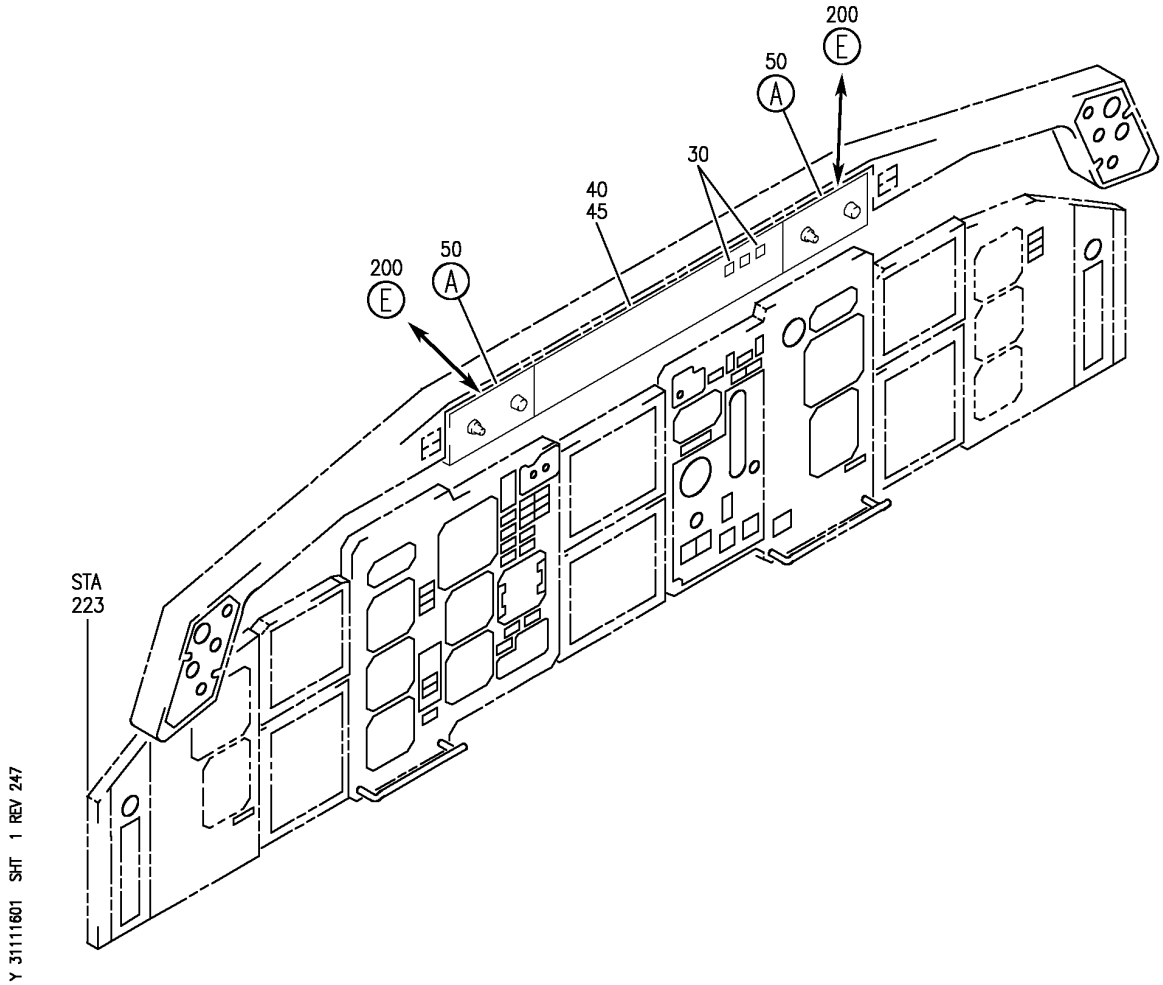

PANEL INSTL-CONT (CENTER INSTRUMENT PANEL AND LIGHTSHIELD ONLY)
FIGURE 1 (SHEET 1)

BOEING PROPRIETARY - Copyright © - Unpublished Work - See title page for details.

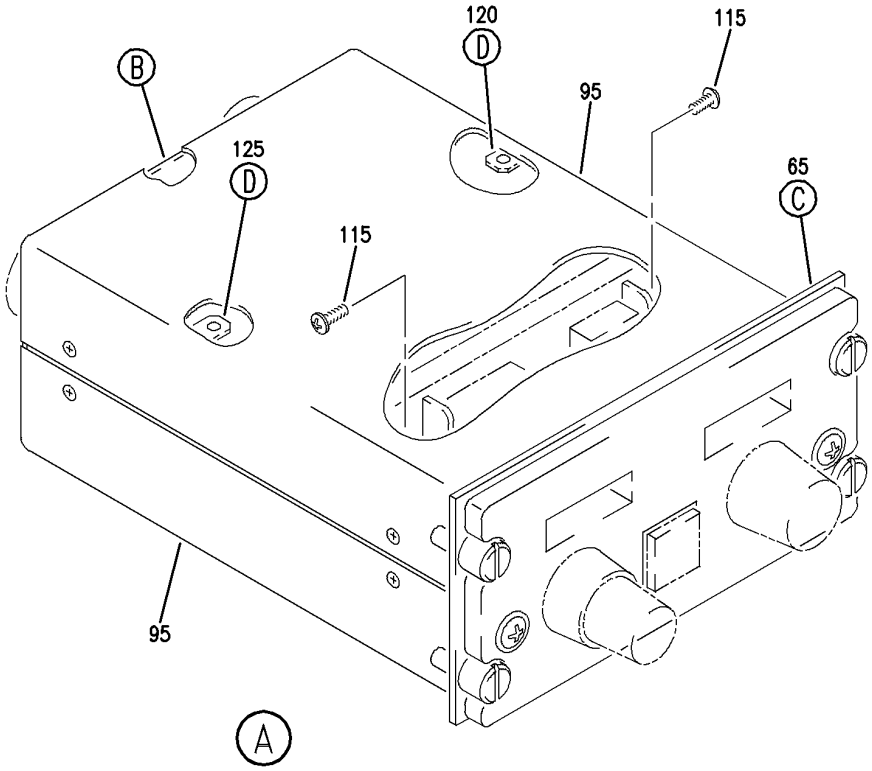

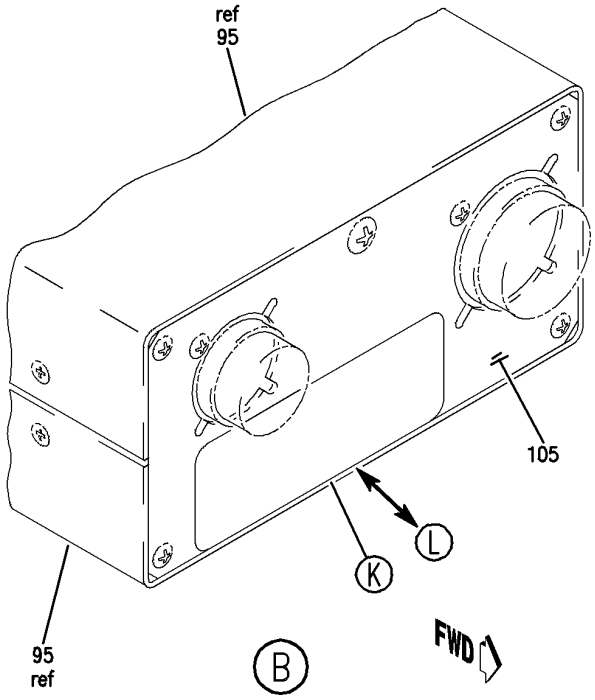

Y 31111601 SHT 2 REV 234

PANEL INSTL-CONT (CENTER INSTRUMENT PANEL AND LIGHTSHIELD ONLY)
FIGURE 1 (SHEET 2)

BOEING PROPRIETARY - Copyright © - Unpublished Work - See title page for details.

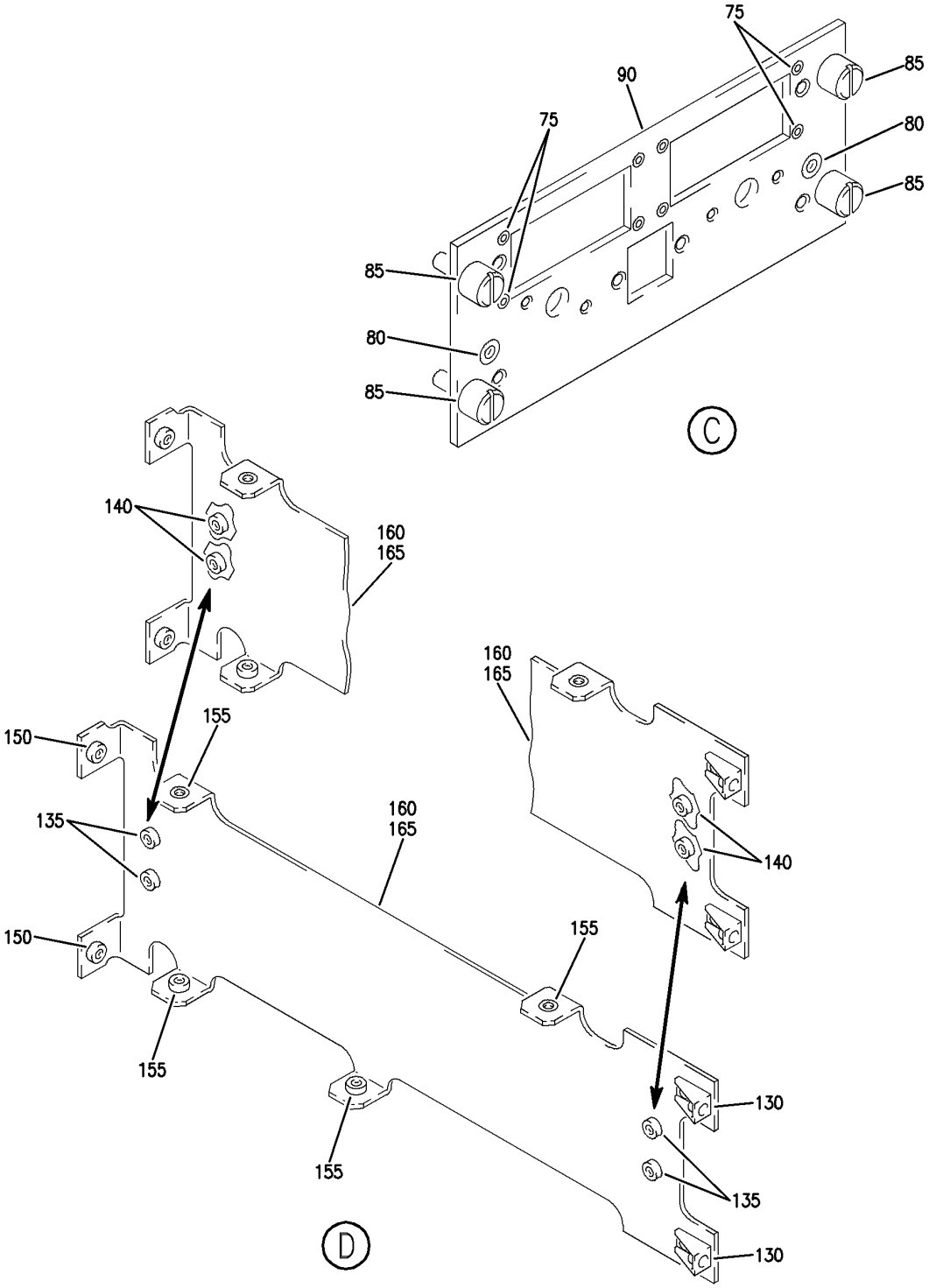

PANEL INSTL-CONT (CENTER INSTRUMENT PANEL AND LIGHTSHIELD ONLY)
FIGURE 1 (SHEET 3)

BOEING PROPRIETARY - Copyright © - Unpublished Work - See title page for details.

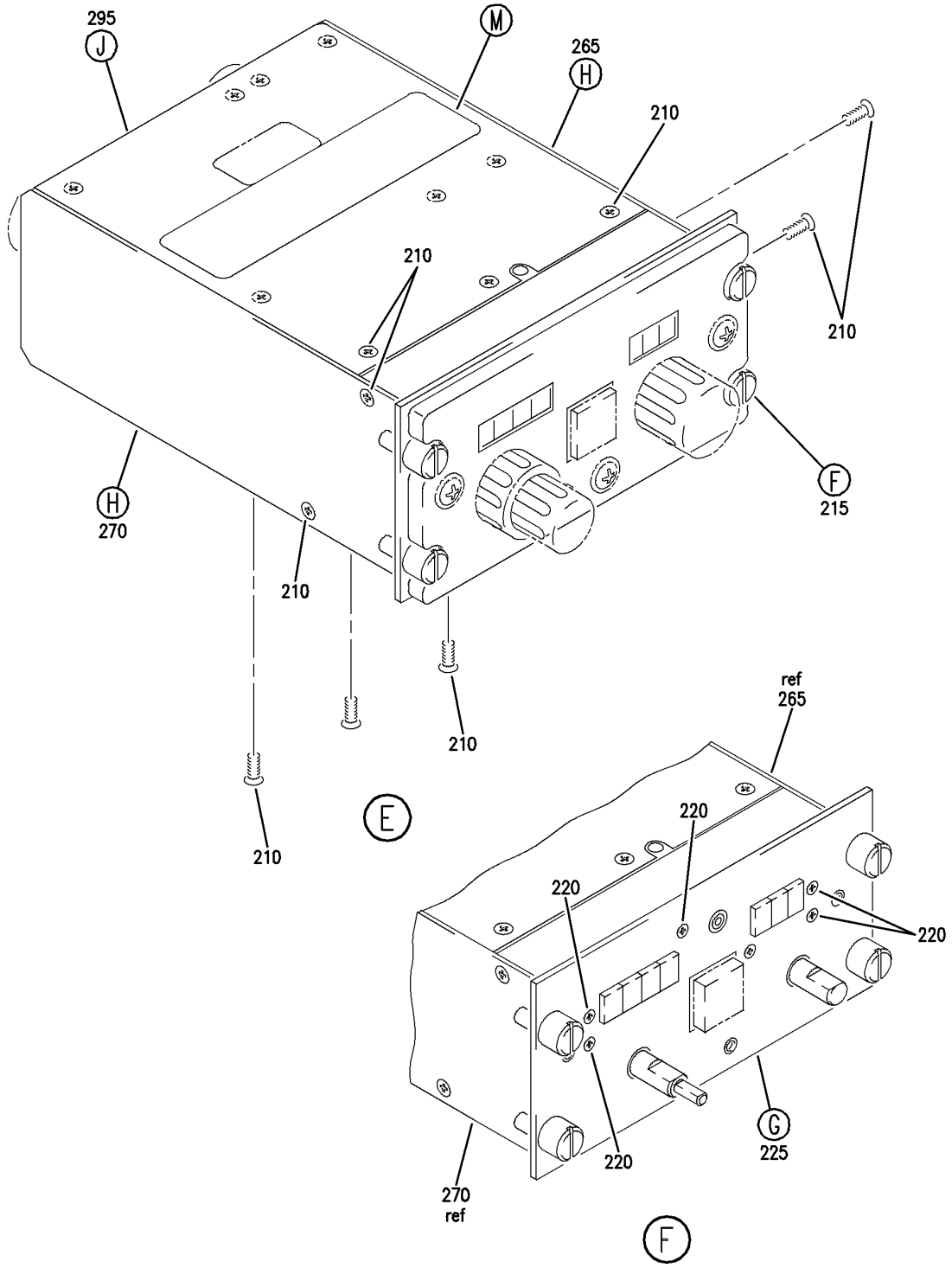

PANEL INSTL-CONT (CENTER INSTRUMENT PANEL AND LIGHTSHIELD ONLY)
FIGURE 1 (SHEET 4)

BOEING PROPRIETARY - Copyright © - Unpublished Work - See title page for details.

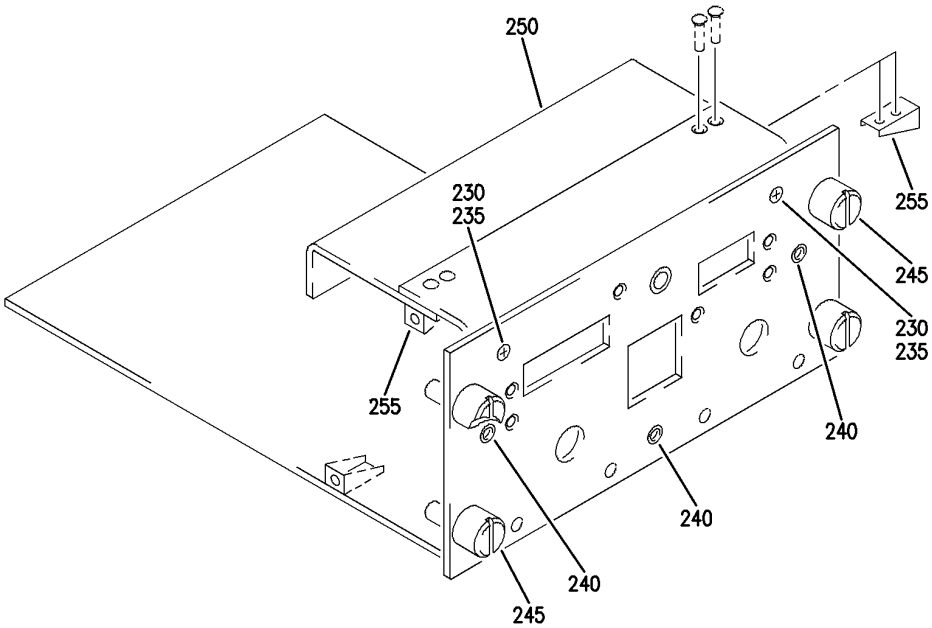

G

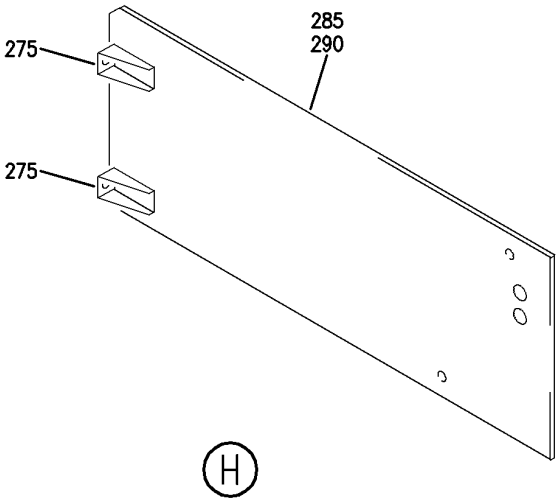

H

Y 31111601 SHT 5 REV 234

PANEL INSTL-CONT (CENTER INSTRUMENT PANEL AND LIGHTSHIELD ONLY)
FIGURE 1 (SHEET 5)

BOEING PROPRIETARY - Copyright © - Unpublished Work - See title page for details.

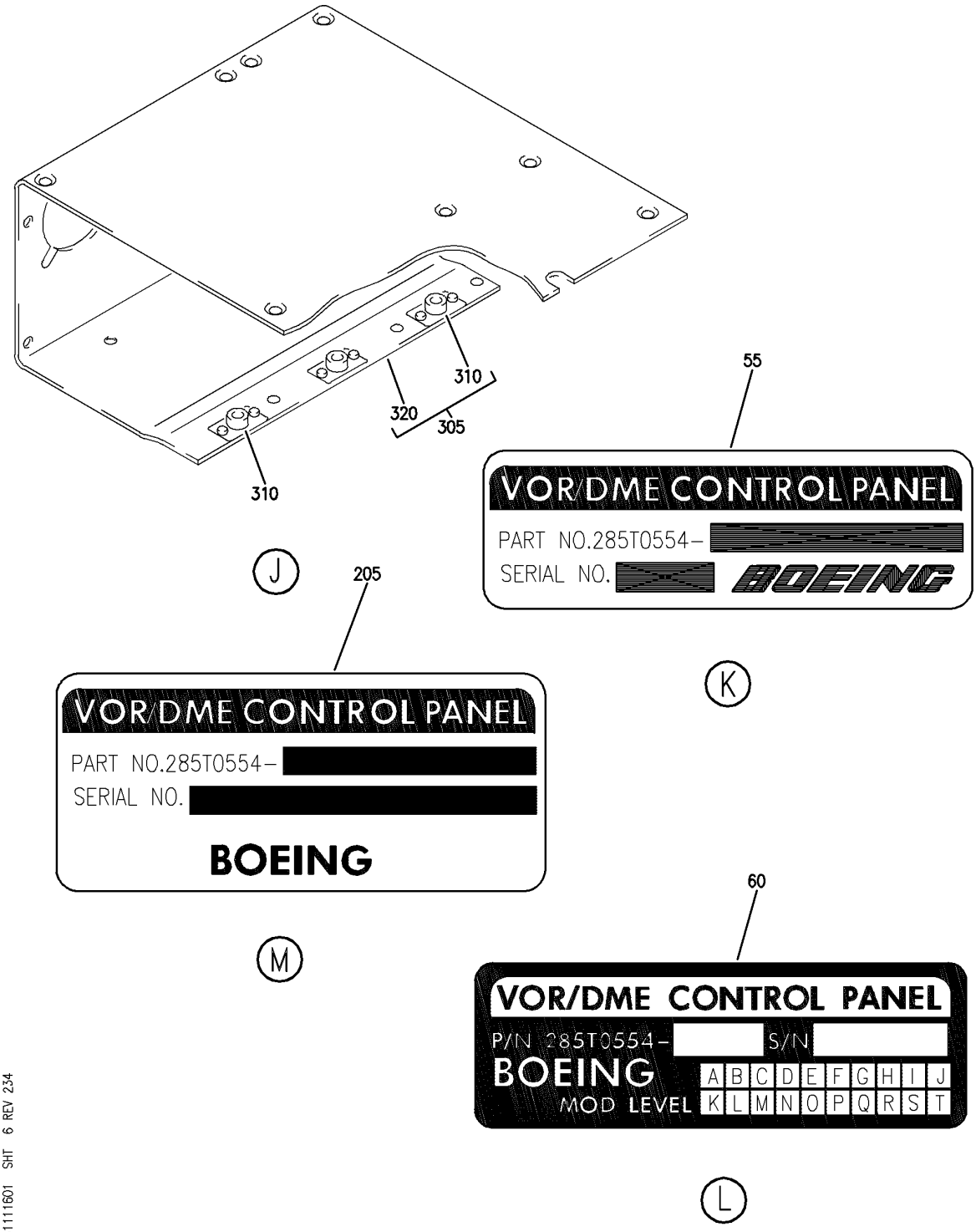

PANEL INSTL-CONT (CENTER INSTRUMENT PANEL AND LIGHTSHIELD ONLY)
FIGURE 1 (SHEET 6)

BOEING PROPRIETARY - Copyright © - Unpublished Work - See title page for details.

FIG ITEM	PART NUMBER	1 2 3 4 5 6 7 NOMENCLATURE	EFFECT FROM TO	UNITS PER ASSY
1		PANEL INSTL-CONT	101106	RF
		(CENTER INSTRUMENT PANEL	108120	
		AND LIGHTSHIELD ONLY)	504903	
- 1	233N2103-32	PANEL INSTL-CONT	101102	RF
		(CENTER INSTRUMENT PANEL	108120	
		AND LIGHTSHIELD ONLY)	504903	
		FOR NHA/OTHER SYS DET SEE:		
		25-10-00-15B		

MISSING ITEM NUMBERS NOT APPLICABLE

- ITEM NOT ILLUSTRATED

BOEING PROPRIETARY - Copyright © - Unpublished Work - See title page for details.

FIG ITEM	PART NUMBER	1 2 3 4 5 6 7 NOMENCLATURE	EFFECT FROM TO	UNITS PER ASSY
1				
- 2	MODREF31741	PANEL INSTL-CONT (CENTER INSTRUMENT PANEL AND LIGHTSHIELD ONLY) MODULE NUMBER: 233N2103-425 REV A FOR OTHER SYS DETAILS SEE: 11-31-01-38 22-11-02-03 22-14-01-03 22-31-02-01 22-34-51-02 26-17-51-05 27-51-57-03 27-58-00-02 27-81-00-01 29-21-55-02 31-25-01-03 31-41-52-02 31-51-52-02 32-35-52-03 32-41-52-02 32-42-55-03 32-46-00-01 32-61-51-03 33-13-57-01A 33-16-52-03 34-12-01-03 34-13-01-03 34-13-02-01 34-13-05-01 34-13-06-01 34-16-51-03 34-21-02-02 34-22-02-02 34-22-05-01A 34-22-06-01 34-24-01-03 34-32-00-02 34-46-51-02 34-51-02-02 34-57-00-01 34-61-01-07 34-61-02-02 77-41-01-01 79-33-51-05 FOR ADDITIONAL DETAILS SEE: 31-11-11-19 31-11-26-38	103105	1

MISSING ITEM NUMBERS NOT APPLICABLE

- ITEM NOT ILLUSTRATED

BOEING PROPRIETARY - Copyright © - Unpublished Work - See title page for details.

FIG ITEM	PART NUMBER	1 2 3 4 5 6 7 NOMENCLATURE	EFFECT FROM TO	UNITS PER ASSY
1				
- 3	MODREF104335	PANEL INSTL-CONT (CENTER INSTRUMENT PANEL AND LIGHTSHIELD ONLY) MODULE NUMBER: 233N2103-425 REV B FOR OTHER SYS DETAILS SEE: 11-31-01-38 22-11-02-03 22-14-01-03 22-31-02-01 22-34-51-02 26-17-51-05 27-51-57-03 27-58-00-02 27-81-00-01 29-21-55-02 31-25-01-03 31-41-52-02 31-51-52-02 32-35-52-03 32-41-52-02 32-42-55-03 32-46-00-01 32-61-51-03 33-13-57-01A 33-16-52-03 34-12-01-03 34-13-01-03 34-13-02-01 34-13-05-01 34-13-06-01 34-16-51-03 34-21-02-02 34-22-02-02 34-22-05-01A 34-22-06-01 34-24-01-03 34-32-00-02 34-46-51-02 34-51-02-02 34-57-00-01 34-61-01-07 34-61-02-02 77-41-01-01 79-33-51-05 FOR ADDITIONAL DETAILS SEE: 31-11-11-19 31-11-26-38	106106	1

MISSING ITEM NUMBERS NOT APPLICABLE

- ITEM NOT ILLUSTRATED

BOEING PROPRIETARY - Copyright © - Unpublished Work - See title page for details.

FIG ITEM	PART NUMBER	1 2 3 4 5 6 7 NOMENCLATURE	EFFECT FROM TO	UNITS PER ASSY
1				
45	822-1492-102	.PANEL ASSY-MODE CONT MCP-705 SUPPLIER CODE: V4V792 SPECIFICATION NUMBER: S241T100-232 ELECTRICAL EQUIP NUMBER: M00090 COMPONENT MAINT MANUAL REF: 22-12-78 QUALIFIED I/W DATA: S241T100-211/ 622-4717-004 MCP IS TWO WAY INTERCHANGEABLE WITH S241T100-232/ 822-1492-102 MCP IF CWS HAS BEEN DE-ACTIVATED ON THE AIRPLANE 822-1492-101 AND 822-1492-102 ARE TWO-WAY REPLACEABLE WHEN BACK COURSE (BCRS) MODE PUSHBUTTON IS REPLACED BY A SWITCH GUARD. FOR BREAKDOWN SEE: 22-11-02-03	103106	RF
50	285T0554-3	.PANEL ASSY-VOR SUPPLIER CODE: V89954 ELECTRICAL EQUIP NUMBER: M00091 M00092 COMPONENT MAINT MANUAL REF: 34-51-61 OPTIONAL PART: 285T0554-5 V89954 FOR OTHER SYS DETAILS SEE: 11-31-01-37 11-31-01-38 33-13-57-01A 34-51-02-02	101106 108120 504903	2

MISSING ITEM NUMBERS NOT APPLICABLE

– ITEM NOT ILLUSTRATED

BOEING PROPRIETARY - Copyright © - Unpublished Work - See title page for details.

	FIG ITEM	PART NUMBER	1 2 3 4 5 6 7 NOMENCLATURE	EFFECT FROM TO	UNITS PER ASSY
	1				
	50	285T0554-5	.PANEL ASSY-VOR SUPPLIER CODE: V89954 ELECTRICAL EQUIP NUMBER: M00091 M00092 COMPONENT MAINT MANUAL REF: 34-51-61 OPTIONAL PART: 285T0554-3 V89954 FOR OTHER SYS DETAILS SEE: 11-31-01-37 11-31-01-38 33-13-57-01A 34-51-02-02	101106 108120 504903	2
R R R R R	50	285T0021-19	.PANEL ASSY-CONT SUPPLIER CODE: V89954 COMPONENT MAINT MANUAL REF: 34-51-51	101106 108120 504903	2
	55	BAC27TEX3466	..MARKER-ALUMINUM FOIL SUPPLIER CODE: V89954 QUALIFIED OPTIONAL DATA: BAC27TEX3466 OPTIONAL TO BAC27TEX4042 WHEN USED WITH ASSOCIATED ITEMS USED ON: 285T0554-5 285T0554-6	101106 108120 504903	1
	55	BAC27TEX3466	..MARKER-ALUMINUM FOIL SUPPLIER CODE: V89954 USED ON: 285T0554-3	101106 108120 504903	1
	60	BAC27TEX4042	..MARKER-ALUMINUM FOIL SUPPLIER CODE: V89954 QUALIFIED OPTIONAL DATA: BAC27TEX3466 OPTIONAL TO BAC27TEX4042 WHEN USED WITH ASSOCIATED ITEMS USED ON: 285T0554-5 285T0554-6	101106 108120 504903	1

MISSING ITEM NUMBERS NOT APPLICABLE

– ITEM NOT ILLUSTRATED

BOEING PROPRIETARY - Copyright © - Unpublished Work - See title page for details.

FIG ITEM	PART NUMBER	1 2 3 4 5 6 7 NOMENCLATURE	EFFECT FROM TO	UNITS PER ASSY
1				
65	285T0548-2	..PANEL ASSY-FRONT SUPPLIER CODE: V89954 USED ON: 285T0554-3	101106 108120 504903	1
65	285T0548-18	..PANEL ASSY-FRONT SUPPLIER CODE: V89954 QUALIFIED OPTIONAL DATA: 285T0548-18 OPTIONAL TO 285T0548-20 WHEN USED WITH ASSOCIATED PARTS USED ON: 285T0554-5	101106 108120 504903	1
65	285T0548-20	..PANEL ASSY-FRONT SUPPLIER CODE: V89954 QUALIFIED OPTIONAL DATA: 285T0548-18 OPTIONAL TO 285T0548-20 WHEN USED WITH ASSOCIATED PARTS USED ON: 285T0554-5 ATTACHING PARTS	101106 108120 504903	1
- 70	NAS514P440-4P	..SCREW -------*-------	101106 108120 504903	4
75	U256-1	...NUT-PRESS SUPPLIER CODE: V46384	101106 108120 504903	8
80	SF6G6CBB5D	...NUT SUPPLIER CODE: V12324 SPECIFICATION NUMBER: BACN10PA06-6	101106 108120 504903	2
85	BACS21DD1B	...STUD ASSY SUPPLIER CODE: V08524 SPECIFICATION NUMBER: BACS21DD1B	101106 108120 504903	4
90	285T0548-12	...PANEL- SUPPLIER CODE: V89954 USED ON: 285T0548-2	101106 108120 504903	1

MISSING ITEM NUMBERS NOT APPLICABLE

- ITEM NOT ILLUSTRATED

BOEING PROPRIETARY - Copyright © - Unpublished Work - See title page for details.

FIG ITEM	PART NUMBER	1 2 3 4 5 6 7 NOMENCLATURE	EFFECT FROM TO	UNITS PER ASSY
1				
90	285T0548-19	...PANEL-	101106	1
		SUPPLIER CODE:	108120	
		V89954	504903	
		USED ON:		
		285T0548-18		
90	285T0548-21	...PANEL-	101106	1
		SUPPLIER CODE:	108120	
		V89954	504903	
		USED ON:		
		285T0548-20		
95	285T0549-2	..COVER ASSY-	101106	2
		SUPPLIER CODE:	108120	
		V89954	504903	
		ATTACHING PARTS		
- 100	NAS514P440-5P	..SCREW	101106	8
			108120	
			504903	
		-------*-------		
105	285T0546-2	..PANEL-REAR	101106	1
		SUPPLIER CODE:	108120	
		V89954	504903	
		ATTACHING PARTS		
- 110	NAS1801-04-5	..SCREW	101106	4
			108120	
			504903	
		-------*-------		
115	NAS514P440-5P	..SCREW	101106	2
			108120	
			504903	
120	285T0550-4	..PANEL ASSY-SIDE	101106	1
		SUPPLIER CODE:	108120	
		V89954	504903	
		OPTIONAL PART:		
		285T0550-12		
		V89954		
		285T0550-16		
		V89954		
120	285T0550-12	..PANEL ASSY-SIDE	101106	1
		SUPPLIER CODE:	108120	
		V89954	504903	
		OPTIONAL PART:		
		285T0550-4		
		V89954		
		285T0550-16		
		V89954		

MISSING ITEM NUMBERS NOT APPLICABLE

- ITEM NOT ILLUSTRATED

BOEING PROPRIETARY - Copyright © - Unpublished Work - See title page for details.

FIG ITEM	PART NUMBER	1 2 3 4 5 6 7 NOMENCLATURE	EFFECT FROM TO	UNITS PER ASSY
1				
120	285T0550-16	..PANEL ASSY-SIDE SUPPLIER CODE: V89954 OPTIONAL PART: 285T0550-4 V89954 285T0550-12 V89954	101106 108120 504903	1
125	285T0550-3	..PANEL ASSY-SIDE SUPPLIER CODE: V89954 OPTIONAL PART: 285T0550-11 V89954 285T0550-15 V89954	101106 108120 504903	1
125	285T0550-11	..PANEL ASSY-SIDE SUPPLIER CODE: V89954 OPTIONAL PART: 285T0550-3 V89954 285T0550-15 V89954	101106 108120 504903	1
125	285T0550-15	..PANEL ASSY-SIDE SUPPLIER CODE: V89954 OPTIONAL PART: 285T0550-3 V89954 285T0550-11 V89954	101106 108120 504903	1
130	F22A27M22-40	...NUT-PRESS SUPPLIER CODE: V0217B	101106 108120 504903	2
135	LAC440-1	...NUT-PRESS SUPPLIER CODE: V46384 USED ON: 285T0550-3 285T0550-4 285T0550-11 285T0550-12	101106 108120 504903	4
140	BACN10XR04	...NUTPLATE- USED ON: 285T0550-15 285T0550-16	101106 108120 504903	4

MISSING ITEM NUMBERS NOT APPLICABLE

– ITEM NOT ILLUSTRATED

BOEING PROPRIETARY - Copyright © - Unpublished Work - See title page for details.

FIG ITEM	PART NUMBER	1 2 3 4 5 6 7 NOMENCLATURE	EFFECT FROM TO	UNITS PER ASSY
1				
		ATTACHING PARTS		
- 145	BACR15BA2AD	...RIVET-	101106	8
		SIZE DETERMINED ON INSTL.	108120	
			504903	
		-------*-------		
150	FE0440EF	...NUT-PRESS	101106	2
		SUPPLIER CODE:	108120	
		V46384	504903	
155	FE0440EF	...NUT-PRESS	101106	4
		SUPPLIER CODE:	108120	
		V46384	504903	
		USED ON:		
		285T0550-11		
		285T0550-12		
		285T0550-15		
		285T0550-16		
155	FE0X440	...NUT-PRESS	101106	4
		SUPPLIER CODE:	108120	
		V46384	504903	
		USED ON:		
		285T0550-3		
		285T0550-4		
160	285T0550-7	...PANEL-	101106	1
		SUPPLIER CODE:	108120	
		V89954	504903	
		USED ON:		
		285T0550-3		
		285T0550-11		
160	285T0550-19	...PANEL-	101106	1
		SUPPLIER CODE:	108120	
		V89954	504903	
		USED ON:		
		285T0550-15		
165	285T0550-8	...PANEL-	101106	1
		SUPPLIER CODE:	108120	
		V89954	504903	
		USED ON:		
		285T0550-4		
		285T0550-12		
165	285T0550-20	...PANEL-	101106	1
		SUPPLIER CODE:	108120	
		V89954	504903	
		USED ON:		
		285T0550-16		

MISSING ITEM NUMBERS NOT APPLICABLE

- ITEM NOT ILLUSTRATED

BOEING PROPRIETARY - Copyright © - Unpublished Work - See title page for details.

FIG ITEM	PART NUMBER	1 2 3 4 5 6 7 NOMENCLATURE	EFFECT FROM TO	UNITS PER ASSY
1				
200	285T0021-16	.PANEL ASSY-VOR SUPPLIER CODE: V89954 ELECTRICAL EQUIP NUMBER: M00091 M00092 COMPONENT MAINT MANUAL REF: 34-51-51 FOR OTHER SYS DETAILS SEE: 11-31-01-37 11-31-01-38 33-13-57-01A 34-51-02-02	101106 108120 504903	2
205	BAC27TEX0935	..MARKER-ALUMINUM FOIL SUPPLIER CODE: V89954	101106 108120 504903	RF
210	NAS514P440-4P	..SCREW	101106 108120 504903	10
215	285T0116-19	..MODULE ASSY- SUPPLIER CODE: V89954 OPTIONAL PART: 285T0116-23 V89954	101106 108120 504903	1
215	285T0116-23	..MODULE ASSY- SUPPLIER CODE: V89954 OPTIONAL PART: 285T0116-19 V89954	101106 108120 504903	1
220	NAS514P440-4P	...SCREW	101106 108120 504903	6
225	285T0440-12	...ENCLOSURE ASSY- SUPPLIER CODE: V89954 USED ON: 285T0116-19	101106 108120 504903	1
225	285T0440-21	...ENCLOSURE ASSY- SUPPLIER CODE: V89954 USED ON: 285T0116-23	101106 108120 504903	1
230	NAS514P440-5P	....SCREW	101106 108120 504903	2

MISSING ITEM NUMBERS NOT APPLICABLE

— ITEM NOT ILLUSTRATED

BOEING PROPRIETARY - Copyright © - Unpublished Work - See title page for details.

FIG ITEM	PART NUMBER	1 2 3 4 5 6 7 NOMENCLATURE	EFFECT FROM TO	UNITS PER ASSY
1				
235	92-1660-40	....NUT	101106	2
		SUPPLIER CODE:	108120	
		V72962	504903	
		SPECIFICATION NUMBER:		
		BACN10DN40		
		OPTIONAL PART:		
		92-1660-440		
		V15653		
240	SF6G6CBB5D	....NUT	101106	3
		SUPPLIER CODE:	108120	
		V12324	504903	
		SPECIFICATION NUMBER:		
		BACN10PA06-6		
245	BACS21DD1B	....STUD ASSY	101106	4
		SUPPLIER CODE:	108120	
		V08524	504903	
		SPECIFICATION NUMBER:		
		BACS21DD1B		
250	285T0438-2	....CHASSIS ASSY-UPR	101106	1
		SUPPLIER CODE:	108120	
		V89954	504903	
255	F22A27M22-40	.....NUT-	101106	2
		SUPPLIER CODE:	108120	
		V0217B	504903	
		ATTACHING PARTS		
- 260	BACR15BA2AD	.....RIVET-	101106	4
		SIZE DETERMINED ON INSTL.	108120	
			504903	
		-------*-------		
265	285T0439-9	..PANEL ASSY-SIDE	101106	1
		SUPPLIER CODE:	108120	
		V89954	504903	
270	285T0439-10	..PANEL ASSY-SIDE	101106	1
		SUPPLIER CODE:	108120	
		V89954	504903	
275	F22A27M22-40	...NUT-	101106	2
		SUPPLIER CODE:	108120	
		V0217B	504903	
		ATTACHING PARTS		
- 280	BACR15BA2AD	...RIVET-	101106	4
		SIZE DETERMINED ON INSTL.	108120	
			504903	
		-------*-------		
285	285T0439-13	...PANEL-	101106	1
		SUPPLIER CODE:	108120	
		V89954	504903	
		USED ON:		
		285T0439-9		

MISSING ITEM NUMBERS NOT APPLICABLE

- ITEM NOT ILLUSTRATED

BOEING PROPRIETARY - Copyright © - Unpublished Work - See title page for details.

FIG ITEM	PART NUMBER	1 2 3 4 5 6 7 NOMENCLATURE	EFFECT FROM TO	UNITS PER ASSY
1				
290	285T0439-14	...PANEL-	101106	1
		SUPPLIER CODE:	108120	
		V89954	504903	
		USED ON:		
		285T0439-10		
295	285T0117-16	..MODULE ASSY-REAR	101106	1
		SUPPLIER CODE:	108120	
		V89954	504903	
		ATTACHING PARTS		
- 300	NAS1801-04-4	..SCREW	101106	2
			108120	
			504903	
		-------*-------		
305	285T0083-103	...CHASSIS ASSY-	101106	1
		SUPPLIER CODE:	108120	
		V89954	504903	
		OPTIONAL PART:		
		285T0083-106		
		V89954		
305	285T0083-106	...CHASSIS ASSY-	101106	1
		SUPPLIER CODE:	108120	
		V89954	504903	
		OPTIONAL PART:		
		285T0083-103		
		V89954		
310	RMF9201M40	....NUTPLATE	101106	3
		SUPPLIER CODE:	108120	
		V72962	504903	
		SPECIFICATION NUMBER:		
		BACN10JN04		
		OPTIONAL PART:		
		BRFM20A04L		
		V52828		
		MF1000-04BAC		
		V15653		
		NS103218-40		
		V80539		
		MF53049-04		
		V15653		
		T8124S04S		
		V11815		
		VN252A40L		
		V92215		
		ATTACHING PARTS		
- 315	BACR15BA3AD	....RIVET	101106	6
			108120	
			504903	
		-------*-------		

MISSING ITEM NUMBERS NOT APPLICABLE

- ITEM NOT ILLUSTRATED

BOEING PROPRIETARY - Copyright © - Unpublished Work - See title page for details.

FIG ITEM	PART NUMBER	1 2 3 4 5 6 7 NOMENCLATURE	EFFECT FROM TO	UNITS PER ASSY
1				
320	285T0083-74	....CHASSIS-	101106	1
		SUPPLIER CODE:	108120	
		V89954	504903	
		USED ON:		
		285T0083-103		
320	285T0083-107	....CHASSIS-	101106	1
		SUPPLIER CODE:	108120	
		V89954	504903	
		USED ON:		
		285T0083-106		

MISSING ITEM NUMBERS NOT APPLICABLE

— ITEM NOT ILLUSTRATED

BOEING PROPRIETARY - Copyright © - Unpublished Work - See title page for details.

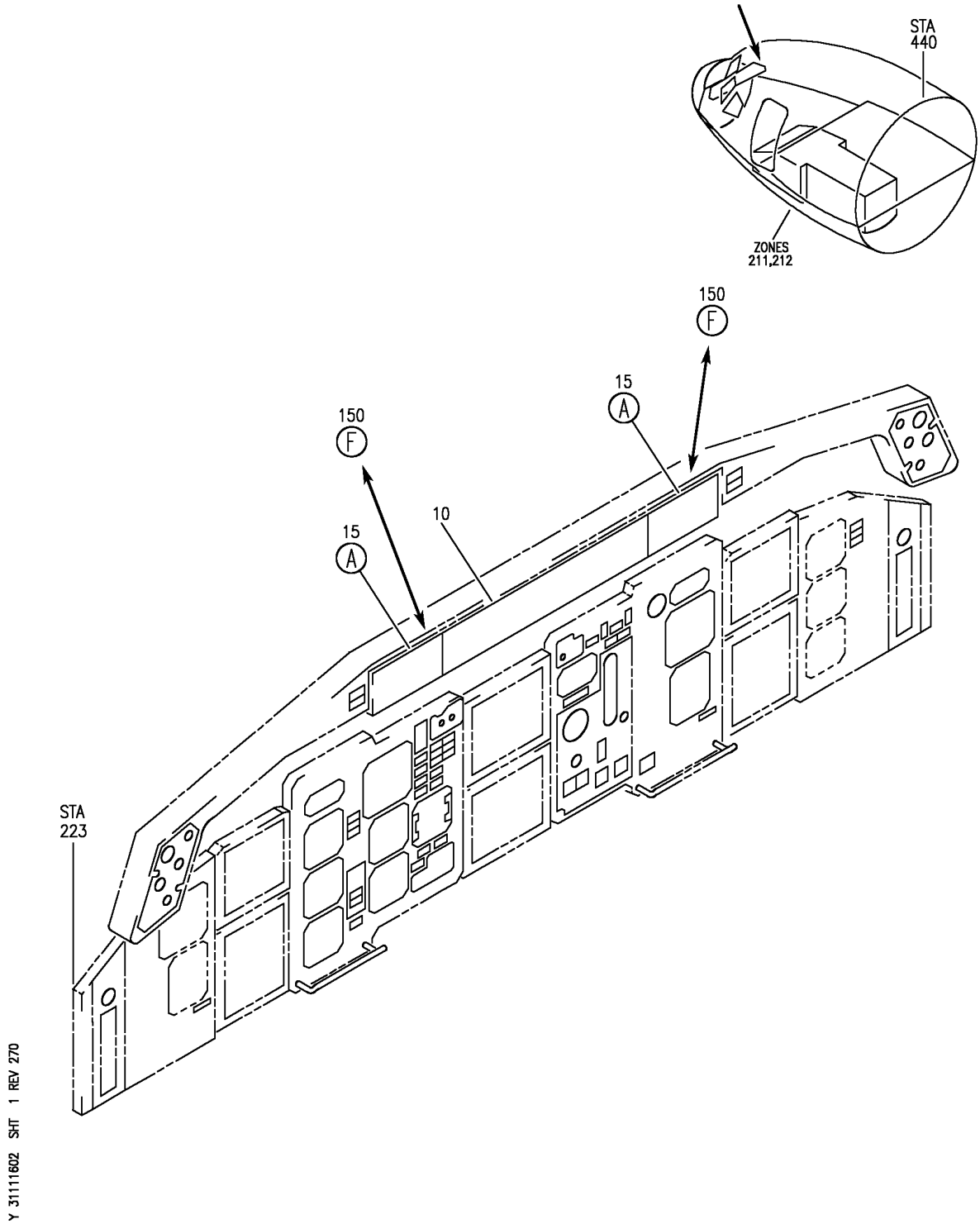

PANEL INSTL-CAPT AND FIRST OFFICER FWD P55 (INDICATING AND RECORDING ONLY)
FIGURE 2 (SHEET 1)

BOEING PROPRIETARY - Copyright © - Unpublished Work - See title page for details.

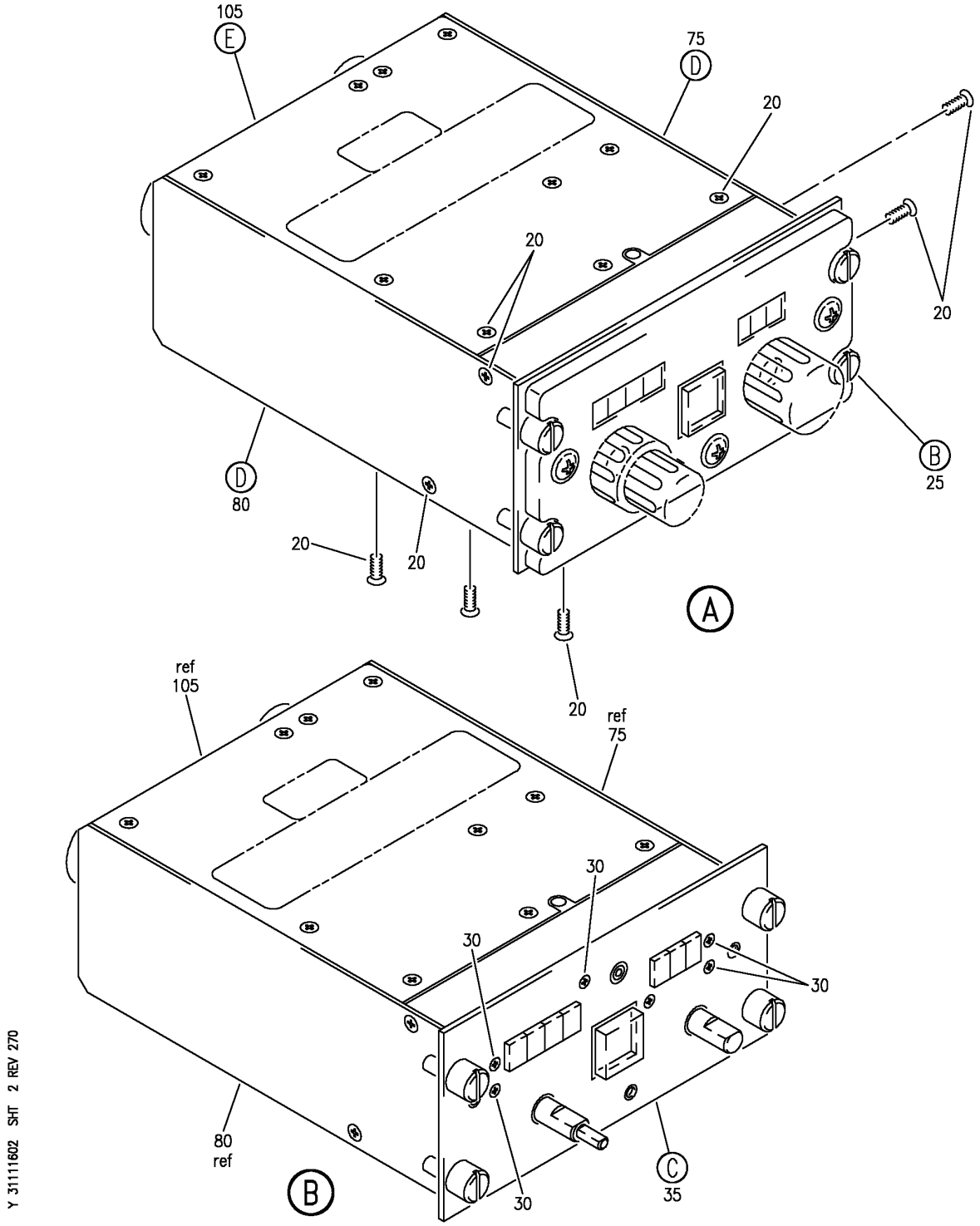

PANEL INSTL-CAPT AND FIRST OFFICER FWD P55 (INDICATING AND RECORDING ONLY)
FIGURE 2 (SHEET 2)

BOEING PROPRIETARY - Copyright © - Unpublished Work - See title page for details.

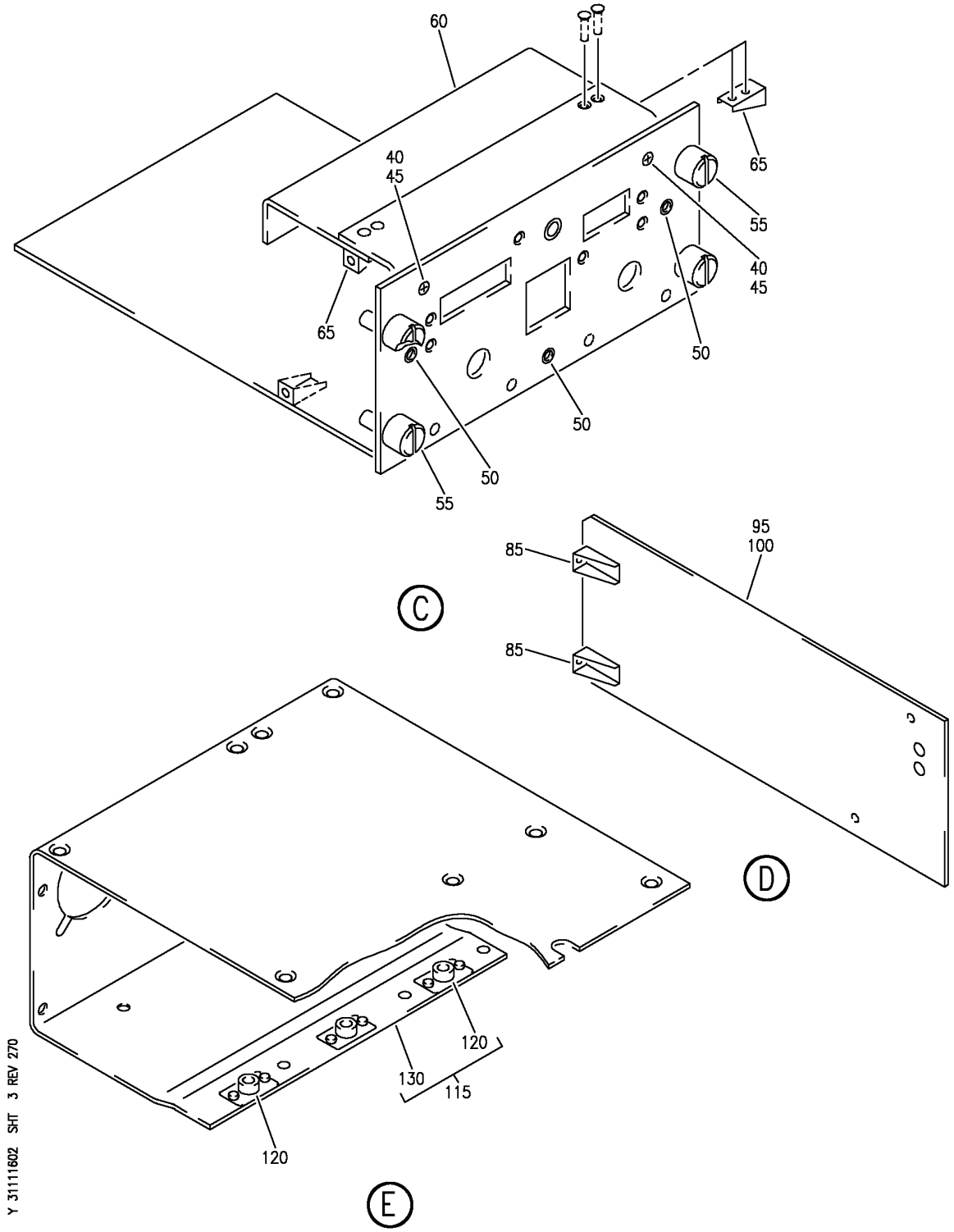

PANEL INSTL-CAPT AND FIRST OFFICER FWD P55 (INDICATING AND RECORDING ONLY)
FIGURE 2 (SHEET 3)

BOEING PROPRIETARY - Copyright © - Unpublished Work - See title page for details.

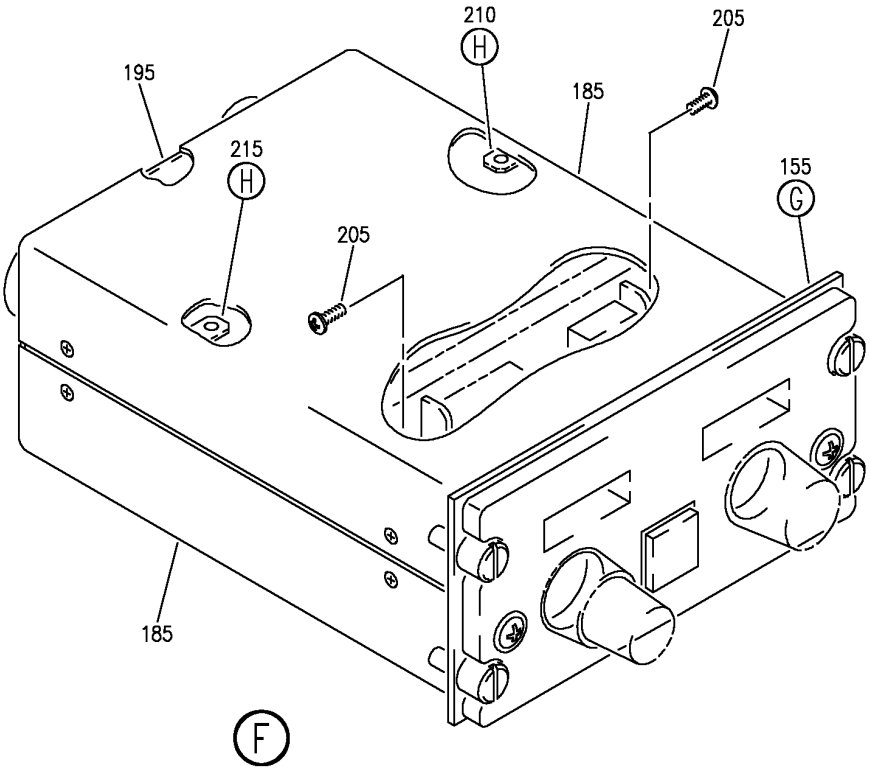

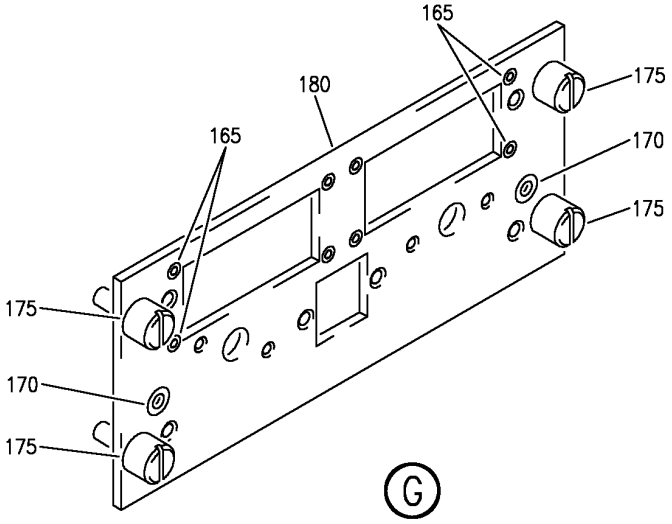

Y 31111602 SHT 4 REV 270

PANEL INSTL-CAPT AND FIRST OFFICER FWD P55 (INDICATING AND RECORDING ONLY)
FIGURE 2 (SHEET 4)

BOEING PROPRIETARY - Copyright © - Unpublished Work - See title page for details.

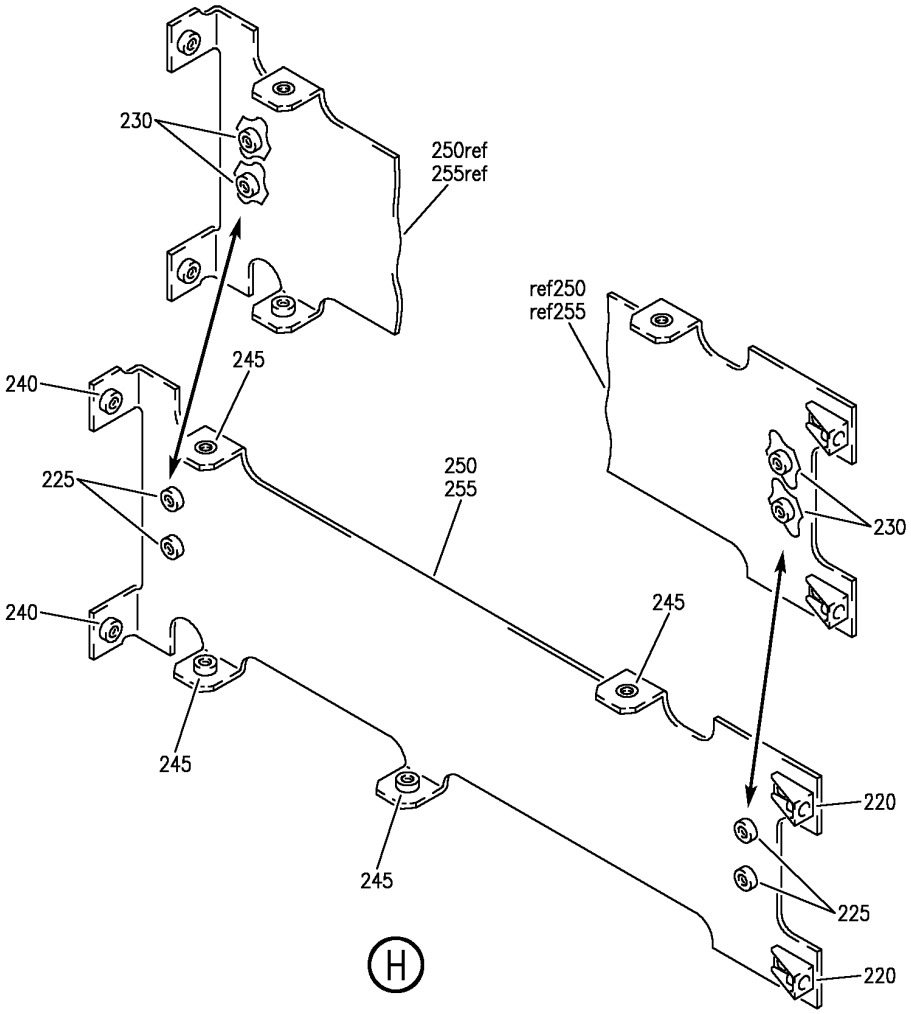

Y 31111602 SHT 5 REV 270

PANEL INSTL-CAPT AND FIRST OFFICER FWD P55 (INDICATING AND RECORDING ONLY)
FIGURE 2 (SHEET 5)

BOEING PROPRIETARY - Copyright © - Unpublished Work - See title page for details.

FIG ITEM	PART NUMBER	1 2 3 4 5 6 7 NOMENCLATURE	EFFECT FROM TO	UNITS PER ASSY
2		PANEL INSTL-CAPT AND FIRST OFFICER FWD P55 (INDICATING AND RECORDING ONLY)	002004 006100 107107 121503 904999	
- 1	233N2101-1	PANEL INSTL-CAPT AND FIRST OFFICER P55 (INDICATING AND RECORDING ONLY)	002004 006100 107107 121503 904999	RF
		POSITION DATA: FWD		
		VARIABLE DRAWING REF: 233N2101-5003 233N2101-5004 233N2101-5037 233N2101-5039 233N2101-5041		
		FOR NHA/OTHER SYS DET SEE: 25-10-00-05A		
10	622-4717-003	.PANEL ASSY-MODE CONT MCP-701	002004 006100 107107 950999	RF
		SUPPLIER CODE: V4V792		
		SPECIFICATION NUMBER: S241T100-202 S241T100-201		
		ELECTRICAL EQUIP NUMBER: M00090		
		COMPONENT MAINT MANUAL REF: 22-11-71		
		PRE SERVICE BULLETIN: 34-0399 34-0399R1		
		PRE ALERT SB: 22A0049		
		PRE SERVICE BULLETIN: MCP-701-22-22 V4V792		
		FOR BREAKDOWN SEE: 22-11-02-01		

MISSING ITEM NUMBERS NOT APPLICABLE

- ITEM NOT ILLUSTRATED

BOEING PROPRIETARY - Copyright © - Unpublished Work - See title page for details.

FIG ITEM	PART NUMBER	1 2 3 4 5 6 7 NOMENCLATURE	EFFECT FROM TO	UNITS PER ASSY
2				
10	622-4717-004	.PANEL ASSY-MODE CONT MCP-701 SUPPLIER CODE: V4V792 FUNCTIONAL DESCRIPTION: PROVIDES PRIMARY INTERFACE BETWEEN THE FLIGHT CREW AND THE AUTOPILOT/FLIGHT DIRECTOR AND THRUST MANAGEMENT SYSTEMS SPECIFICATION NUMBER: S241T100-211 ELECTRICAL EQUIP NUMBER: M00090 COMPONENT MAINT MANUAL REF: 22-11-71 QUALIFIED I/W DATA: S241T100-211/ 622-4717-004 MCP IS TWO WAY INTERCHANGEABLE WITH S241T100-232/ 822-1492-102 MCP IF CWS HAS BEEN DE-ACTIVATED ON THE AIRPLANE S241T100-211/ 622-4717-004 MCP IS TWO WAY INTERCHANGEABLE WITH S241T100-232/ 822-1492-102 MCP IF BCRS AND CWS HAS BEEN DE-ACTIVATED ON THE AIRPLANE PRE SERVICE BULLETIN: 34-0399 34-0399R1 POST ALERT SB: 22A0049 POST SERVICE BULLETIN: MCP-701-22-22 V4V792 FOR BREAKDOWN SEE: 22-11-02-01	002004 006100 107107 950999	RF

MISSING ITEM NUMBERS NOT APPLICABLE

– ITEM NOT ILLUSTRATED

BOEING PROPRIETARY - Copyright © - Unpublished Work - See title page for details.

FIG ITEM	PART NUMBER	1 2 3 4 5 6 7 NOMENCLATURE	EFFECT FROM TO	UNITS PER ASSY
2				
10	622-5391-002	.PANEL ASSY-MODE CONT MCP-702 SUPPLIER CODE: V4V792 SPECIFICATION NUMBER: S241T100-251 ELECTRICAL EQUIP NUMBER: M00090 COMPONENT MAINT MANUAL REF: 22-11-71 PRE ALERT SB: 22A0049 PRE SERVICE BULLETIN: MCP-702-22-22R1 V4V792 FOR BREAKDOWN SEE: 22-11-02-01	121503 904949	RF
10	622-5391-003	.PANEL ASSY-MODE CONT MCP-702 SUPPLIER CODE: V4V792 SPECIFICATION NUMBER: S241T100-252 COMPONENT MAINT MANUAL REF: 22-11-71 POST ALERT SB: 22A0049 POST SERVICE BULLETIN: MCP-702-22-22 V4V792 FOR BREAKDOWN SEE: 22-11-02-01	121503 904949	RF

MISSING ITEM NUMBERS NOT APPLICABLE

– ITEM NOT ILLUSTRATED

BOEING PROPRIETARY - Copyright © - Unpublished Work - See title page for details.

FIG ITEM	PART NUMBER	1 2 3 4 5 6 7 NOMENCLATURE	EFFECT FROM TO	UNITS PER ASSY
2				
10	822-1492-102	.PANEL ASSY-MODE CONT MCP-705 SUPPLIER CODE: V4V792 SPECIFICATION NUMBER: S241T100-232 ELECTRICAL EQUIP NUMBER: M00090 COMPONENT MAINT MANUAL REF: 22-12-78 QUALIFIED I/W DATA: 822-1492-101 AND 822-1492-102 ARE TWO-WAY REPLACEABLE WHEN BACK COURSE (BCRS) MODE PUSHBUTTON IS REPLACED BY A SWITCH GUARD. POST SERVICE BULLETIN: 34-0399 34-0399R1 FOR BREAKDOWN SEE: 22-11-02-01	009009 107107	1
15	285T0021-16	.PANEL ASSY-VOR CONT SUPPLIER CODE: V89954 ELECTRICAL EQUIP NUMBER: M00091 M00092 COMPONENT MAINT MANUAL REF: 34-51-51 FOR OTHER SYS DETAILS SEE: 11-31-01-24 33-13-57-01 33-13-57-02 34-51-02-01	002004 006100 107107 121503 904999	2
20	NAS514P440-4P	..SCREW	002004 006100 107107 121503 904999	10
25	285T0116-19	..MODULE ASSY- SUPPLIER CODE: V89954 OPTIONAL PART: 285T0116-23 V89954	002004 006100 107107 121503 904999	1

MISSING ITEM NUMBERS NOT APPLICABLE

– ITEM NOT ILLUSTRATED

BOEING PROPRIETARY - Copyright © - Unpublished Work - See title page for details.

FIG ITEM	PART NUMBER	1 2 3 4 5 6 7 NOMENCLATURE	EFFECT FROM TO	UNITS PER ASSY
2				
25	285T0116-23	..MODULE ASSY-	002004	1
		SUPPLIER CODE:	006100	
		V89954	107107	
		OPTIONAL PART:	121503	
		285T0116-19	904999	
		V89954		
30	NAS514P440-4P	...SCREW	002004	6
			006100	
			107107	
			121503	
			904999	
35	285T0440-12	...ENCLOSURE ASSY-	002004	1
		SUPPLIER CODE:	006100	
		V89954	107107	
		USED ON:	121503	
		285T0116-19	904999	
35	285T0440-21	...ENCLOSURE ASSY-	002004	1
		SUPPLIER CODE:	006100	
		V89954	107107	
		USED ON:	121503	
		285T0116-23	904999	
40	NAS514P440-5P	....SCREW	002004	2
			006100	
			107107	
			121503	
			904999	
45	92-1660-40	....NUT	002004	2
		SUPPLIER CODE:	006100	
		V72962	107107	
		SPECIFICATION NUMBER:	121503	
		BACN10DN40	904999	
		OPTIONAL PART:		
		92-1660-440		
		V15653		
50	SF6G6CBB5D	....NUT	002004	3
		SUPPLIER CODE:	006100	
		V12324	107107	
		SPECIFICATION NUMBER:	121503	
		BACN10PA06-6	904999	
55	BACS21DD1B	....STUD ASSY	002004	4
		SUPPLIER CODE:	006100	
		V08524	107107	
		SPECIFICATION NUMBER:	121503	
		BACS21DD1B	904999	
60	285T0438-2	....CHASSIS ASSY-UPR	002004	1
		SUPPLIER CODE:	006100	
		V89954	107107	
			121503	
			904999	

MISSING ITEM NUMBERS NOT APPLICABLE

– ITEM NOT ILLUSTRATED

BOEING PROPRIETARY - Copyright © - Unpublished Work - See title page for details.

FIG ITEM	PART NUMBER	1 2 3 4 5 6 7 NOMENCLATURE	EFFECT FROM TO	UNITS PER ASSY
2				
65	F22A27M22-40	.....NUT-	002004	2
		SUPPLIER CODE:	006100	
		V0217B	107107	
			121503	
			904999	
		ATTACHING PARTS		
- 70	BACR15BA2AD	.....RIVET-	002004	4
		SIZE DETERMINED ON INSTL.	006100	
			107107	
			121503	
			904999	
		-------*-------		
75	285T0439-9	..PANEL ASSY-SIDE	002004	1
		SUPPLIER CODE:	006100	
		V89954	107107	
			121503	
			904999	
80	285T0439-10	..PANEL ASSY-SIDE	002004	1
		SUPPLIER CODE:	006100	
		V89954	107107	
			121503	
			904999	
85	F22A27M22-40	...NUT-	002004	2
		SUPPLIER CODE:	006100	
		V0217B	107107	
			121503	
			904999	
		ATTACHING PARTS		
- 90	BACR15BA2AD	...RIVET-	002004	4
		SIZE DETERMINED ON INSTL.	006100	
			107107	
			121503	
			904999	
		-------*-------		
95	285T0439-13	...PANEL-	002004	1
		SUPPLIER CODE:	006100	
		V89954	107107	
		USED ON:	121503	
		285T0439-9	904999	
100	285T0439-14	...PANEL-	002004	1
		SUPPLIER CODE:	006100	
		V89954	107107	
		USED ON:	121503	
		285T0439-10	904999	
105	285T0117-16	..MODULE ASSY-REAR	002004	1
		SUPPLIER CODE:	006100	
		V89954	107107	
			121503	
			904999	

MISSING ITEM NUMBERS NOT APPLICABLE

- ITEM NOT ILLUSTRATED

BOEING PROPRIETARY - Copyright © - Unpublished Work - See title page for details.

FIG ITEM	PART NUMBER	1 2 3 4 5 6 7 NOMENCLATURE	EFFECT FROM TO	UNITS PER ASSY
2				
		ATTACHING PARTS		
- 110	NAS1801-04-4	..SCREW	002004 006100 107107 121503 904999	2
		-------*-------		
115	285T0083-103	...CHASSIS ASSY- SUPPLIER CODE: V89954 OPTIONAL PART: 285T0083-106 V89954	002004 006100 107107 121503 904999	1
115	285T0083-106	...CHASSIS ASSY- SUPPLIER CODE: V89954 OPTIONAL PART: 285T0083-103 V89954	002004 006100 107107 121503 904999	1
120	RMF9201M40	....NUTPLATE SUPPLIER CODE: V72962 SPECIFICATION NUMBER: BACN10JN04 OPTIONAL PART: BRFM20A04L V52828 MF1000-04BAC V15653 NS103218-40 V80539 MF53049-04 V15653 T8124S04S V11815 VN252A40L V92215	002004 006100 107107 121503 904999	3
		ATTACHING PARTS		
- 125	BACR15BA3AD	....RIVET	002004 006100 107107 121503 904999	6
		-------*-------		
130	285T0083-74	....CHASSIS- SUPPLIER CODE: V89954 USED ON: 285T0083-103	002004 006100 107107 121503 904999	1

MISSING ITEM NUMBERS NOT APPLICABLE

- ITEM NOT ILLUSTRATED

BOEING PROPRIETARY - Copyright © - Unpublished Work - See title page for details.

FIG ITEM	PART NUMBER	1 2 3 4 5 6 7 NOMENCLATURE	EFFECT FROM TO	UNITS PER ASSY
2				
130	285T0083-107	....CHASSIS-	002004	1
		SUPPLIER CODE:	006100	
		V89954	107107	
		USED ON:	121503	
		285T0083-106	904999	
150	285T0554-3	.PANEL ASSY-VOR CONT	002004	2
		SUPPLIER CODE:	006100	
		V89954	107107	
		ELECTRICAL EQUIP NUMBER:	121503	
		M00091	904999	
		M00092		
		COMPONENT MAINT MANUAL REF:		
		34-51-61		
		OPTIONAL PART:		
		285T0554-5		
		V89954		
		FOR OTHER SYS DETAILS SEE:		
		11-31-01-24		
		33-13-57-01		
		33-13-57-02		
		34-51-02-01		
150	285T0554-5	.PANEL ASSY-VOR CONT	002004	2
		SUPPLIER CODE:	006100	
		V89954	107107	
		ELECTRICAL EQUIP NUMBER:	121503	
		M00091	904999	
		M00092		
		COMPONENT MAINT MANUAL REF:		
		34-51-61		
		OPTIONAL PART:		
		285T0554-3		
		V89954		
		FOR OTHER SYS DETAILS SEE:		
		11-31-01-24		
		33-13-57-01		
		33-13-57-02		
		34-51-02-01		
R 150	285T0021-19	.PANEL ASSY-CONT	002004	2
R		SUPPLIER CODE:	006100	
R		V89954	107107	
R		COMPONENT MAINT MANUAL REF:	121503	
R		34-51-51	904999	
155	285T0548-2	..PANEL ASSY-FRONT	002004	1
		SUPPLIER CODE:	006100	
		V89954	107107	
		USED ON:	121503	
		285T0554-3	904999	

MISSING ITEM NUMBERS NOT APPLICABLE

– ITEM NOT ILLUSTRATED

BOEING PROPRIETARY - Copyright © - Unpublished Work - See title page for details.

FIG ITEM	PART NUMBER	1 2 3 4 5 6 7 NOMENCLATURE	EFFECT FROM TO	UNITS PER ASSY
2				
155	285T0548-18	..PANEL ASSY-FRONT SUPPLIER CODE: V89954 QUALIFIED OPTIONAL DATA: 285T0548-18 OPTIONAL TO 285T0548-20 WHEN USED WITH ASSOCIATED PARTS USED ON: 285T0554-5	002004 006100 107107 121503 904999	1
155	285T0548-20	..PANEL ASSY-FRONT SUPPLIER CODE: V89954 QUALIFIED OPTIONAL DATA: 285T0548-18 OPTIONAL TO 285T0548-20 WHEN USED WITH ASSOCIATED PARTS USED ON: 285T0554-5	002004 006100 107107 121503 904999	1
		ATTACHING PARTS		
- 160	NAS514P440-4P	..SCREW	002004 006100 107107 121503 904999	4
		-------*-------		
165	U256-1	...NUT-PRESS SUPPLIER CODE: V46384	002004 006100 107107 121503 904999	8
170	SF6G6CBB5D	...NUT SUPPLIER CODE: V12324 SPECIFICATION NUMBER: BACN10PA06-6	002004 006100 107107 121503 904999	2
175	BACS21DD1B	...STUD ASSY SUPPLIER CODE: V08524 SPECIFICATION NUMBER: BACS21DD1B	002004 006100 107107 121503 904999	4
180	285T0548-12	...PANEL- SUPPLIER CODE: V89954 USED ON: 285T0548-2	002004 006100 107107 121503 904999	1

MISSING ITEM NUMBERS NOT APPLICABLE

- ITEM NOT ILLUSTRATED

BOEING PROPRIETARY - Copyright © - Unpublished Work - See title page for details.

FIG ITEM	PART NUMBER	1 2 3 4 5 6 7 NOMENCLATURE	EFFECT FROM TO	UNITS PER ASSY
2				
180	285T0548-19	...PANEL-	002004	1
		SUPPLIER CODE:	006100	
		V89954	107107	
		USED ON:	121503	
		285T0548-18	904999	
180	285T0548-21	...PANEL-	002004	1
		SUPPLIER CODE:	006100	
		V89954	107107	
		USED ON:	121503	
		285T0548-20	904999	
185	285T0549-2	..COVER ASSY-	002004	2
		SUPPLIER CODE:	006100	
		V89954	107107	
			121503	
			904999	
		ATTACHING PARTS		
- 190	NAS514P440-5P	..SCREW	002004	8
			006100	
			107107	
			121503	
			904999	
		-------*-------		
195	285T0546-2	..PANEL-REAR	002004	1
		SUPPLIER CODE:	006100	
		V89954	107107	
			121503	
			904999	
		ATTACHING PARTS		
- 200	NAS1801-04-5	..SCREW	002004	4
			006100	
			107107	
			121503	
			904999	
		-------*-------		
205	NAS514P440-5P	..SCREW	002004	2
			006100	
			107107	
			121503	
			904999	
210	285T0550-4	..PANEL ASSY-SIDE	002004	1
		SUPPLIER CODE:	006100	
		V89954	107107	
		OPTIONAL PART:	121503	
		285T0550-12	904999	
		V89954		
		285T0550-16		
		V89954		

MISSING ITEM NUMBERS NOT APPLICABLE

- ITEM NOT ILLUSTRATED

BOEING PROPRIETARY - Copyright © - Unpublished Work - See title page for details.

FIG ITEM	PART NUMBER	1 2 3 4 5 6 7 NOMENCLATURE	EFFECT FROM TO	UNITS PER ASSY
2				
210	285T0550-12	..PANEL ASSY-SIDE	002004	1
		SUPPLIER CODE:	006100	
		V89954	107107	
		OPTIONAL PART:	121503	
		285T0550-4	904999	
		V89954		
		285T0550-16		
		V89954		
210	285T0550-16	..PANEL ASSY-SIDE	002004	1
		SUPPLIER CODE:	006100	
		V89954	107107	
		OPTIONAL PART:	121503	
		285T0550-4	904999	
		V89954		
		285T0550-12		
		V89954		
215	285T0550-3	..PANEL ASSY-SIDE	002004	1
		SUPPLIER CODE:	006100	
		V89954	107107	
		OPTIONAL PART:	121503	
		285T0550-11	904999	
		V89954		
		285T0550-15		
		V89954		
215	285T0550-11	..PANEL ASSY-SIDE	002004	1
		SUPPLIER CODE:	006100	
		V89954	107107	
		OPTIONAL PART:	121503	
		285T0550-3	904999	
		V89954		
		285T0550-15		
		V89954		
215	285T0550-15	..PANEL ASSY-SIDE	002004	1
		SUPPLIER CODE:	006100	
		V89954	107107	
		OPTIONAL PART:	121503	
		285T0550-3	904999	
		V89954		
		285T0550-11		
		V89954		
220	F22A27M22-40	...NUT-PRESS	002004	2
		SUPPLIER CODE:	006100	
		V0217B	107107	
			121503	
			904999	

MISSING ITEM NUMBERS NOT APPLICABLE

– ITEM NOT ILLUSTRATED

BOEING PROPRIETARY - Copyright © - Unpublished Work - See title page for details.

FIG ITEM	PART NUMBER	1 2 3 4 5 6 7 NOMENCLATURE	EFFECT FROM TO	UNITS PER ASSY
2				
225	LAC440-1	...NUT-PRESS SUPPLIER CODE: V46384 USED ON: 285T0550-3 285T0550-4 285T0550-11 285T0550-12	002004 006100 107107 121503 904999	4
230	BACN10XR04	...NUTPLATE- USED ON: 285T0550-15 285T0550-16	002004 006100 107107 121503 904999	4
		ATTACHING PARTS		
- 235	BACR15BA2AD	...RIVET- SIZE DETERMINED ON INSTL.	002004 006100 107107 121503 904999	8
		-------*-------		
240	FE0440EF	...NUT-PRESS SUPPLIER CODE: V46384	002004 006100 107107 121503 904999	2
245	FE0440EF	...NUT-PRESS SUPPLIER CODE: V46384 USED ON: 285T0550-11 285T0550-12 285T0550-15 285T0550-16	002004 006100 107107 121503 904999	4
245	FE0X440	...NUT-PRESS SUPPLIER CODE: V46384 USED ON: 285T0550-3 285T0550-4	002004 006100 107107 121503 904999	4
250	285T0550-7	...PANEL- SUPPLIER CODE: V89954 USED ON: 285T0550-3 285T0550-11	002004 006100 107107 121503 904999	1

MISSING ITEM NUMBERS NOT APPLICABLE

- ITEM NOT ILLUSTRATED

BOEING PROPRIETARY - Copyright © - Unpublished Work - See title page for details.

FIG ITEM	PART NUMBER	1 2 3 4 5 6 7 NOMENCLATURE	EFFECT FROM TO	UNITS PER ASSY
2				
250	285T0550-19	...PANEL-	002004	1
		SUPPLIER CODE:	006100	
		V89954	107107	
		USED ON:	121503	
		285T0550-15	904999	
255	285T0550-8	...PANEL-	002004	1
		SUPPLIER CODE:	006100	
		V89954	107107	
		USED ON:	121503	
		285T0550-4	904999	
		285T0550-12		
255	285T0550-20	...PANEL-	002004	1
		SUPPLIER CODE:	006100	
		V89954	107107	
		USED ON:	121503	
		285T0550-16	904999	

MISSING ITEM NUMBERS NOT APPLICABLE

– ITEM NOT ILLUSTRATED

BOEING PROPRIETARY - Copyright © - Unpublished Work - See title page for details.

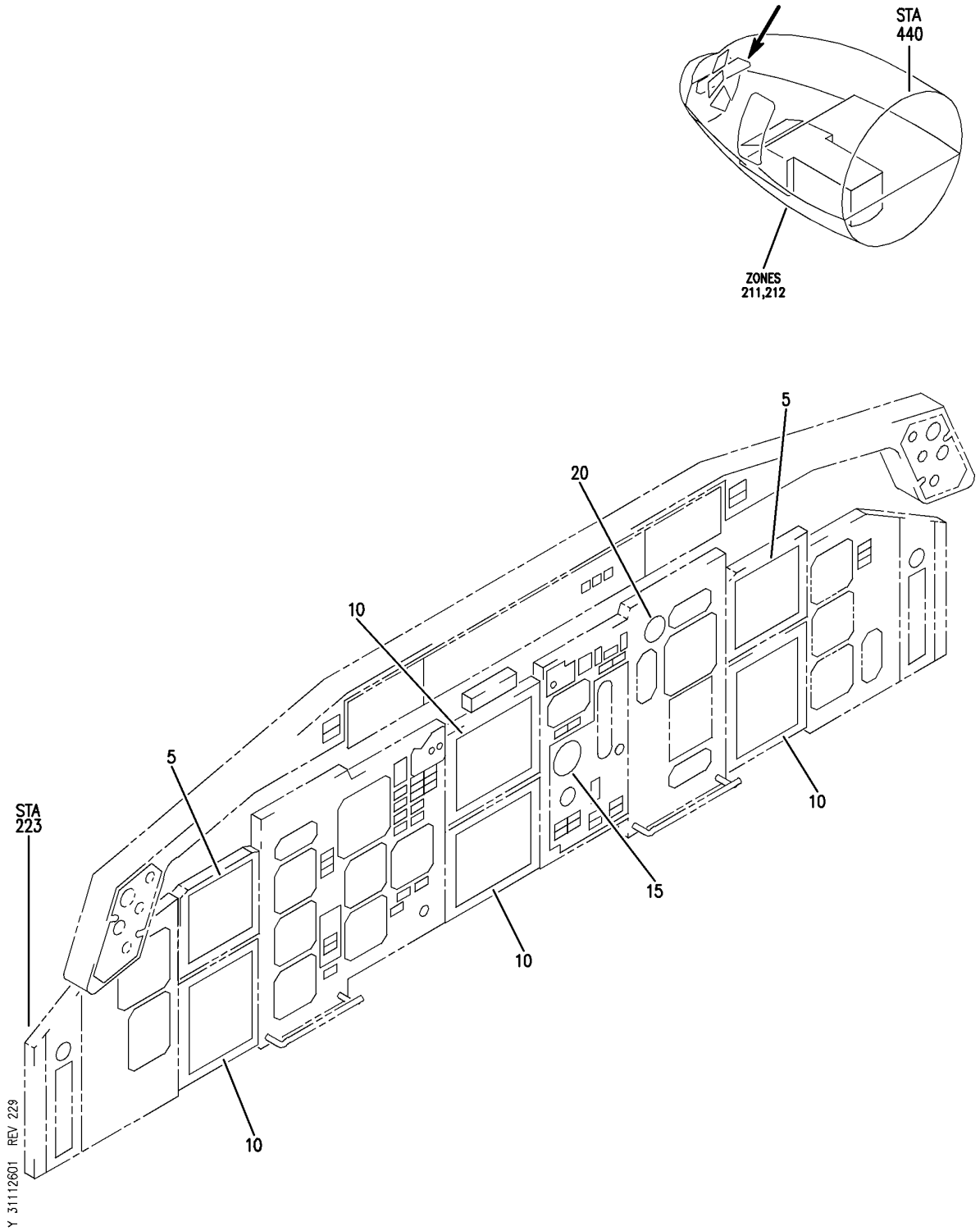

PANEL INSTL-P3-1 AND P3-3 (FIRST OFFICER'S INSTRUMENT PANEL ONLY)
FIGURE 1

BOEING PROPRIETARY - Copyright © - Unpublished Work - See title page for details.

FIG ITEM	PART NUMBER	1 2 3 4 5 6 7 NOMENCLATURE	EFFECT FROM TO	UNITS PER ASSY
1				
		PANEL INSTL-P3-1 AND P3-3	101106	RF
		(FIRST OFFICER'S	108120	
		INSTRUMENT PANEL ONLY)	504903	
- 1	233N2103-1	PANEL INSTL-P3-1 AND P3-3	101102	RF
		(FIRST OFFICER'S	108120	
		INSTRUMENT PANEL ONLY)	504903	
		FOR NHA/OTHER SYS DET SEE:		
		25-10-00-15		
- 1	MODREF33340	PANEL INSTL-P3-1 AND P3-3	103106	1
		(FIRST OFFICER'S		
		INSTRUMENT PANEL ONLY)		
		MODULE NUMBER:		
		233N2103-100 REV A		
		FOR OTHER SYS DETAILS SEE:		
		27-58-00-02		
		31-41-01-01		
		32-41-52-02		
		33-11-51-13		
		33-13-51-01		
		33-14-51-01		
		34-13-05-01		
		34-22-03-01		
		34-22-04-01		
		FOR ADDITIONAL DETAILS SEE:		
		31-11-11-01		
5	622-7998-003	.INDICATOR ASSY-ELECTRONIC	101106	RF
		ATTITUDE DIRECTOR	108120	
		MULTICOLOR DISPLAY UNIT	504903	
		SUPPLIER CODE:		
		V4V792		
		SPECIFICATION NUMBER:		
		S242T404-511		
		MISCELLANEOUS DATA:		
		622-7998-013 IS		
		IDENTICAL TO		
		622-7998-003 EXCEPT THAT		
		THE BEZEL COLOR IS GRAY		
		INSTEAD OF BROWN.		
		622-7998-013 IS		
		INTERCHANGEABLE WITH		
		622-7998-003 SUBJECT TO		
		CUSTOMER PREFERENCE.		
		ELECTRICAL EQUIP NUMBER:		
		N00044		
		COMPONENT MAINT MANUAL REF:		
		34-22-60		
		FOR BREAKDOWN SEE:		
		34-22-03-01		

MISSING ITEM NUMBERS NOT APPLICABLE

- ITEM NOT ILLUSTRATED

BOEING PROPRIETARY - Copyright © - Unpublished Work - See title page for details.

FIG ITEM	PART NUMBER	1 2 3 4 5 6 7 NOMENCLATURE	EFFECT FROM TO	UNITS PER ASSY
1				
10	622-7999-003	.INDICATOR ASSY-ELECTRONIC HORIZ SITUATION SUPPLIER CODE: V4V792 SPECIFICATION NUMBER: S242T404-611 MISCELLANEOUS DATA: 622-7999-013 IS IDENTICAL TO 622-7999-003 EXCEPT THAT THE BEZEL COLOR IS GRAY INSTEAD OF BROWN. 622-7999-013 IS INTERCHANGEABLE WITH 622-7999-003 SUBJECT TO CUSTOMER PREFERENCE. SEE SPARES DWG. 242N5002 FOR 757 INTERCHANGEABILITY FOR 767 SEE 242T4213 ELECTRICAL EQUIP NUMBER: N00045 COMPONENT MAINT MANUAL REF: 34-22-60 FOR BREAKDOWN SEE: 34-22-04-01	101106 108120 504903	RF
15	215-016-001	.INDICATOR-FLAP POSITION SUPPLIER CODE: V26055 SPECIFICATION NUMBER: S231T280-1 ELECTRICAL EQUIP NUMBER: N00015 COMPONENT MAINT MANUAL REF: 27-50-01 FOR BREAKDOWN SEE: 27-58-00-02	101106 108120 504903	RF

MISSING ITEM NUMBERS NOT APPLICABLE

– ITEM NOT ILLUSTRATED

BOEING PROPRIETARY - Copyright © - Unpublished Work - See title page for details.

FIG ITEM	PART NUMBER	1 2 3 4 5 6 7 NOMENCLATURE	EFFECT FROM TO	UNITS PER ASSY
1				
20	163LCP77	.INDICATOR ASSY-BRAKE PRESSURE SUPPLIER CODE: V35918 SPECIFICATION NUMBER: S231N212-9 ELECTRICAL EQUIP NUMBER: N00010 COMPONENT MAINT MANUAL REF: 32-41-69 OPTIONAL PART: 115-099-9 V34830 FOR BREAKDOWN SEE: 32-41-52-02	101106 108120 504903	RF
20	115-099-9	.INDICATOR ASSY-BRAKE PRESSURE SUPPLIER CODE: V34830 SPECIFICATION NUMBER: S231T231-9 SB DATA FROM A CMM: POST SB 115-099-29-03 ELECTRICAL EQUIP NUMBER: N00010 COMPONENT MAINT MANUAL REF: 29-31-01 OPTIONAL PART: 163LCP77 V35918 FOR BREAKDOWN SEE: 32-41-52-02	101106 108120 504903	RF

MISSING ITEM NUMBERS NOT APPLICABLE

– ITEM NOT ILLUSTRATED

BOEING PROPRIETARY - Copyright © - Unpublished Work - See title page for details.

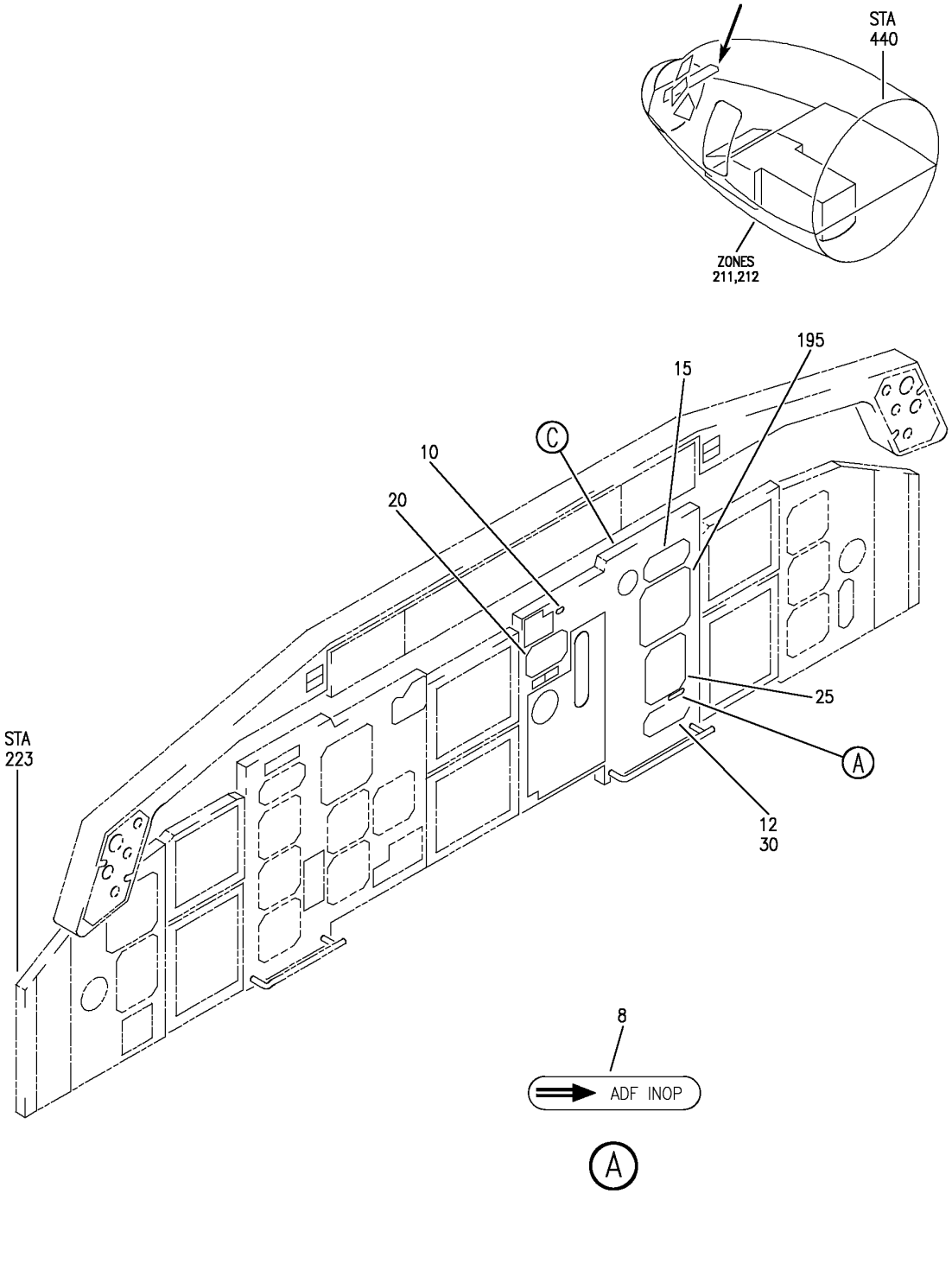

PANEL INSTL-P3-1 (FIRST OFFICER'S INSTRUMENT PANEL ONLY)
FIGURE 2 (SHEET 1)

BOEING PROPRIETARY - Copyright © - Unpublished Work - See title page for details.

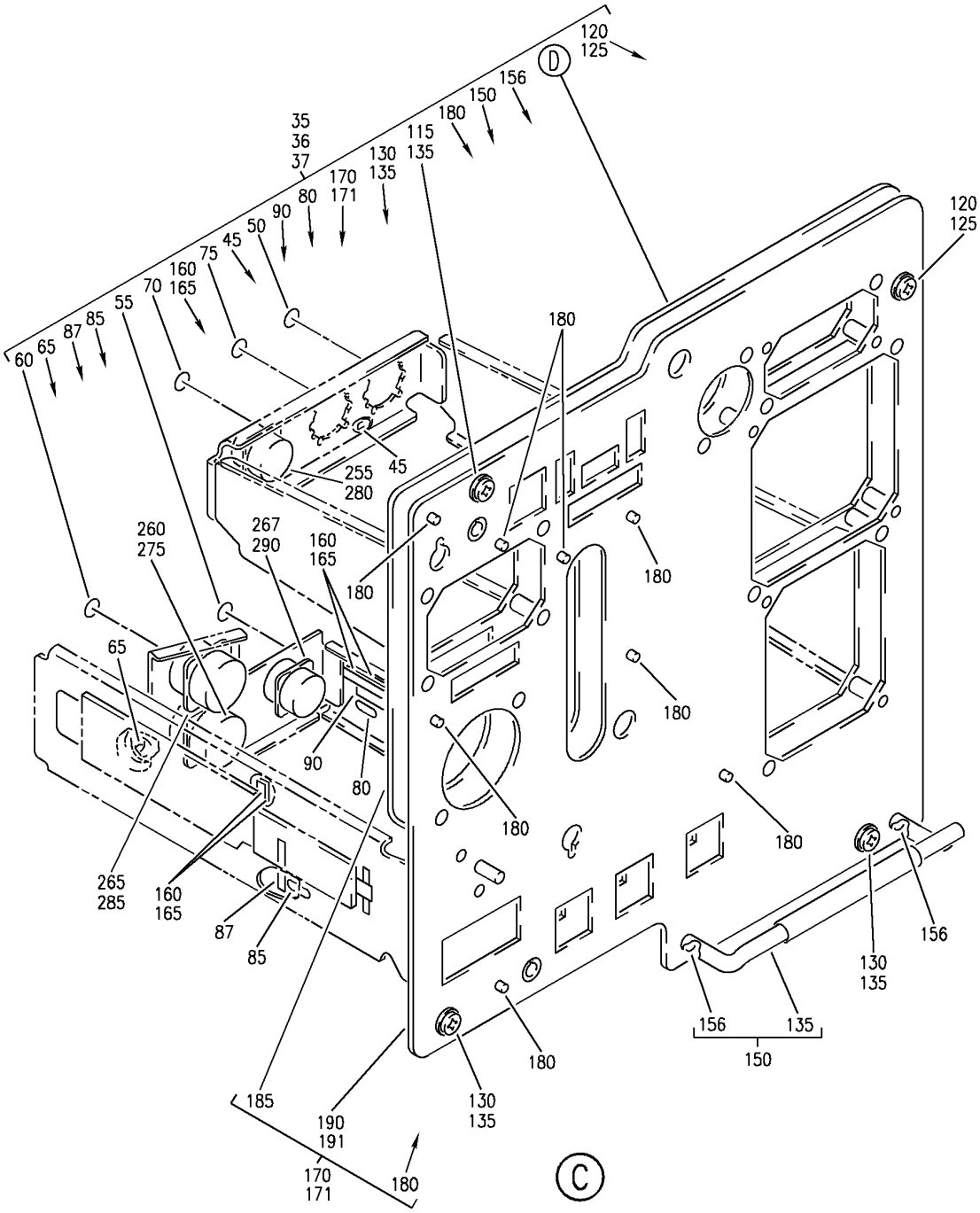

Y 31112602 SHT 2 REV 295

PANEL INSTL-P3-1 (FIRST OFFICER'S INSTRUMENT PANEL ONLY)
FIGURE 2 (SHEET 2)

BOEING PROPRIETARY - Copyright © - Unpublished Work - See title page for details.

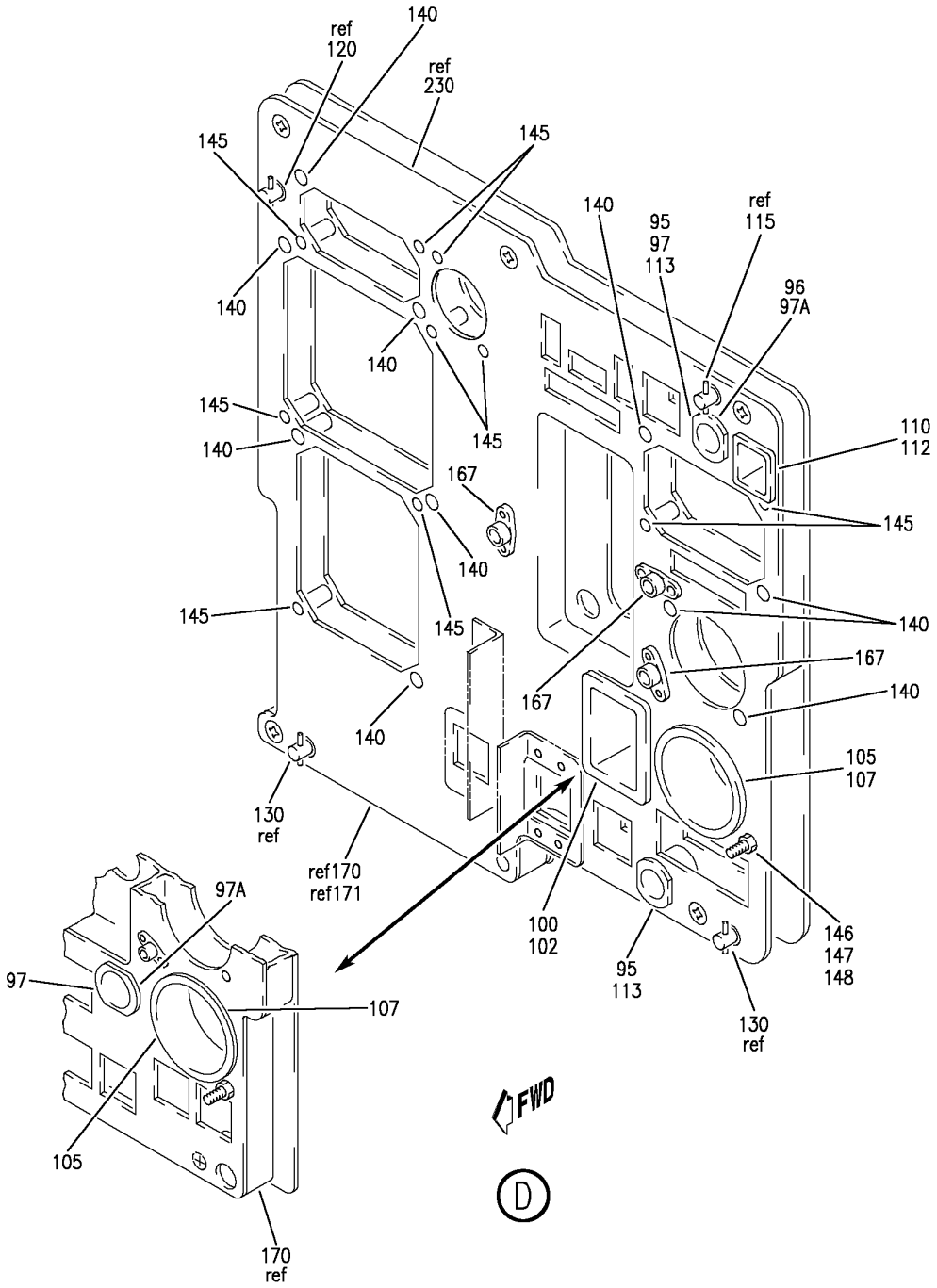

PANEL INSTL-P3-1 (FIRST OFFICER'S INSTRUMENT PANEL ONLY)
FIGURE 2 (SHEET 3)

BOEING PROPRIETARY - Copyright © - Unpublished Work - See title page for details.

FIG ITEM	PART NUMBER	1 2 3 4 5 6 7 NOMENCLATURE	EFFECT FROM TO	UNITS PER ASSY
2				
		PANEL INSTL-P3-1 (FIRST OFFICER'S INSTRUMENT PANEL ONLY)	101102 108120	
- 1	233N2103-17	PANEL INSTL-P3-1 (FIRST OFFICER'S INSTRUMENT PANEL ONLY) FOR NHA/OTHER SYS DET SEE: 25-10-00-15B	101101	RF
- 1	233N2103-371	PANEL INSTL-P3-1 (FIRST OFFICER'S INSTRUMENT PANEL ONLY) FOR NHA/OTHER SYS DET SEE: 25-10-00-15B	108120	RF
- 1	233N2103-217	PANEL INSTL-P3-1 (FIRST OFFICER'S INSTRUMENT PANEL ONLY) FOR NHA/OTHER SYS DET SEE: 25-10-00-15B	102102	RF
15	622-5374-002	.INDICATOR ASSY-AUTOLAND STATUS SUPPLIER CODE: V4V792 SPECIFICATION NUMBER: S241T120-1 ELECTRICAL EQUIP NUMBER: N00071 COMPONENT MAINT MANUAL REF: 22-14-70 FOR BREAKDOWN SEE: 22-14-01-03	101102 108120	RF
20	143D6354G2	.PANEL ASSY-THRUST MODE SELECT SUPPLIER CODE: V89954 FUNCTIONAL DESCRIPTION: ALLOWS CREW TO SELECT THRUST LIMIT COMPUTATION MODES SPECIFICATION NUMBER: S241T200-154 ELECTRICAL EQUIP NUMBER: M10258 COMPONENT MAINT MANUAL REF: 22-31-24 FOR BREAKDOWN SEE: 22-31-02-01	101102 108120	RF

MISSING ITEM NUMBERS NOT APPLICABLE

- ITEM NOT ILLUSTRATED

BOEING PROPRIETARY - Copyright © - Unpublished Work - See title page for details.

FIG ITEM	PART NUMBER	1 2 3 4 5 6 7 NOMENCLATURE	EFFECT FROM TO	UNITS PER ASSY
2				
25	622-5001-109	.INDICATOR ASSY-DME/RADIO MAGNETIC SUPPLIER CODE: V4V792 SPECIFICATION NUMBER: S242T403-109 ELECTRICAL EQUIP NUMBER: N00043 COMPONENT MAINT MANUAL REF: 34-22-73 QUALIFIED I/W DATA: S242T403-107 (622-5001-107) RB S242T403-109 (622-5001-109) WITH THE INCORPORATION OF S/B 757-34-0018 AND VENDOR S/B (ROCKWELL COLLINS) RDM1 743-34-10(R1) FOR BREAKDOWN SEE: 34-22-05-01A	101102 108120	RF
35	233N2222-301	.MODULE ASSY- COMPONENT MAINT MANUAL REF: 31-11-49 PRE ALERT SB: 33A0044 FOR OTHER SYS DETAILS SEE: 22-14-01-03 22-31-02-01 26-17-51-05 27-51-57-03 27-58-00-02 27-81-00-01 32-35-52-03 32-41-52-02 32-61-51-03 33-13-57-01A 34-13-02-01 34-22-05-01A 34-46-51-02	101101	1

MISSING ITEM NUMBERS NOT APPLICABLE

– ITEM NOT ILLUSTRATED

BOEING PROPRIETARY - Copyright © - Unpublished Work - See title page for details.

FIG ITEM	PART NUMBER	1 2 3 4 5 6 7 NOMENCLATURE	EFFECT FROM TO	UNITS PER ASSY
2				
35	233N2222-1301	.MODULE ASSY- COMPONENT MAINT MANUAL REF: 31-11-49 POST ALERT SB: 33A0044 FOR OTHER SYS DETAILS SEE: 22-14-01-03 22-31-02-01 26-17-51-05 27-51-57-03 27-58-00-02 27-81-00-01 32-35-52-03 32-41-52-02 32-61-51-03 33-13-57-01A 34-13-02-01 34-22-05-01A 34-46-51-02	101101	1
35	233N2222-321	.MODULE ASSY- COMPONENT MAINT MANUAL REF: 31-11-49 PRE ALERT SB: 33A0044 FOR OTHER SYS DETAILS SEE: 22-14-01-03 22-31-02-01 26-17-51-05 27-51-57-03 27-58-00-02 27-81-00-01 32-35-52-03 32-41-52-02 32-61-51-03 33-13-57-01A 34-13-02-01 34-22-05-01A 34-46-51-02	102102	1

MISSING ITEM NUMBERS NOT APPLICABLE

– ITEM NOT ILLUSTRATED

BOEING PROPRIETARY - Copyright © - Unpublished Work - See title page for details.

FIG ITEM	PART NUMBER	1 2 3 4 5 6 7 NOMENCLATURE	EFFECT FROM TO	UNITS PER ASSY
2				
35	233N2222-1321	.MODULE ASSY- COMPONENT MAINT MANUAL REF: 31-11-49 POST ALERT SB: 33A0044 FOR OTHER SYS DETAILS SEE: 22-14-01-03 22-31-02-01 26-17-51-05 27-51-57-03 27-58-00-02 27-81-00-01 32-35-52-03 32-41-52-02 32-61-51-03 33-13-57-01A 34-13-02-01 34-22-05-01A 34-46-51-02	102102	1
35	233N2222-1329	.MODULE ASSY- COMPONENT MAINT MANUAL REF: 31-11-49 POST ALERT SB: 33A0044 FOR OTHER SYS DETAILS SEE: 22-14-01-03 22-31-02-01 26-17-51-05 27-51-57-03 27-58-00-02 27-81-00-01 32-35-52-03 32-41-52-02 32-61-51-03 33-13-57-01A 34-13-02-01 34-22-05-01A 34-46-51-02	102102	1

MISSING ITEM NUMBERS NOT APPLICABLE

– ITEM NOT ILLUSTRATED

BOEING PROPRIETARY - Copyright © - Unpublished Work - See title page for details.

FIG ITEM	PART NUMBER	1 2 3 4 5 6 7 NOMENCLATURE	EFFECT FROM TO	UNITS PER ASSY
2				
35	233N2222-329	.MODULE ASSY- COMPONENT MAINT MANUAL REF: 31-11-49 PRE ALERT SB: 33A0044 FOR OTHER SYS DETAILS SEE: 22-14-01-03 22-31-02-01 26-17-51-05 27-51-57-03 27-58-00-02 27-81-00-01 32-35-52-03 32-41-52-02 32-61-51-03 33-13-57-01A 34-13-02-01 34-22-05-01A 34-46-51-02	102102	1
36	233N2222-1342	.MODULE ASSY- COMPONENT MAINT MANUAL REF: 31-11-49 POST ALERT SB: 33A0044 FOR OTHER SYS DETAILS SEE: 22-14-01-03 22-31-02-01 26-17-51-05 27-51-57-03 27-58-00-02 27-81-00-01 32-35-52-03 32-41-52-02 32-61-51-03 33-13-57-01A 34-13-02-01 34-22-05-01A 34-46-51-02	102102 108120	1

MISSING ITEM NUMBERS NOT APPLICABLE

– ITEM NOT ILLUSTRATED

BOEING PROPRIETARY - Copyright © - Unpublished Work - See title page for details.

FIG ITEM	PART NUMBER	1 2 3 4 5 6 7 NOMENCLATURE	EFFECT FROM TO	UNITS PER ASSY
2				
36	233N2222-342	.MODULE ASSY- COMPONENT MAINT MANUAL REF: 31-11-49 PRE ALERT SB: 33A0044 FOR OTHER SYS DETAILS SEE: 22-14-01-03 22-31-02-01 26-17-51-05 27-51-57-03 27-58-00-02 27-81-00-01 32-35-52-03 32-41-52-02 32-61-51-03 33-13-57-01A 34-13-02-01 34-22-05-01A 34-46-51-02	102102 108120	1
- 40	233N2222-77	..MODULE ASSY- PRE ALERT SB: 33A0044	101101	RF
- 40	233N2222-100	..MODULE ASSY- USED ON: 233N2222-321 PRE ALERT SB: 33A0044	102102	RF
- 40	233N2222-1077	..MODULE ASSY- POST ALERT SB: 33A0044	101101	RF
- 40	233N2222-111	..MODULE ASSY- USED ON: 233N2222-329 PRE ALERT SB: 33A0044	102102	RF
- 40	233N2222-1100	..MODULE ASSY- USED ON: 233N2222-1321 POST ALERT SB: 33A0044	102102	RF
- 41	233N2222-1111	..MODULE ASSY- USED ON: 233N2222-1329 POST ALERT SB: 33A0044	102102	RF

MISSING ITEM NUMBERS NOT APPLICABLE

- ITEM NOT ILLUSTRATED

BOEING PROPRIETARY - Copyright © - Unpublished Work - See title page for details.

FIG ITEM	PART NUMBER	1 2 3 4 5 6 7 NOMENCLATURE	EFFECT FROM TO	UNITS PER ASSY
2				
- 41	233N2222-1122	..MODULE ASSY-	102102	RF
		USED ON:	108120	
		233N2222-1342		
		POST ALERT SB:		
		33A0044		
- 41	233N2222-122	..MODULE ASSY-	102102	RF
		USED ON:	108120	
		233N2222-342		
		PRE ALERT SB:		
		33A0044		
45	BAC27NEL0340	...DECAL-	101102	1
		PLACARD CONTENT:	108120	
		AP0301		
50	BAC27NEL0187	...DECAL-	101102	1
		PLACARD CONTENT:	108120	
		1		
55	BAC27NEL0188	...DECAL-	101102	1
		PLACARD CONTENT:	108120	
		2		
60	BAC27NEL0189	...DECAL-	101102	1
		PLACARD CONTENT:	108120	
		3		
65	BAC27NEL0190	...DECAL-	101102	1
		PLACARD CONTENT:	108120	
		4		
70	BAC27NEL0191	...DECAL-	101102	1
		PLACARD CONTENT:	108120	
		5		
75	BAC27NEL0192	...DECAL-	101102	1
		PLACARD CONTENT:	108120	
		6		
80	BAC27NFDE0094	...DECAL-	101102	1
		PLACARD CONTENT:	108120	
		TB0071		
85	BAC27NFDE0093	...DECAL-	101102	1
		PLACARD CONTENT:	108120	
		TB0070		
87	BAC27TEX0384	...DECAL	101102	1
			108120	
90	BAC27TEX8	...DECAL	101102	1
			108120	
95	233T2220-10	...CUP ASSY-	101102	2
		USED ON:		
		233N2222-135		
96	233T2220-12	....SEAL	101102	1
97	233T2220-10	...CUP ASSY	108120	2
97A	233T2220-12	....SEAL	108120	1
100	233T2220-19	...CUP ASSY	101102	1
102	233T2220-21	....SEAL	101102	1

MISSING ITEM NUMBERS NOT APPLICABLE

- ITEM NOT ILLUSTRATED

BOEING PROPRIETARY - Copyright © - Unpublished Work - See title page for details.

FIG ITEM	PART NUMBER	1 2 3 4 5 6 7 NOMENCLATURE	EFFECT FROM TO	UNITS PER ASSY
2				
105	233T2220-24	...CUP ASSY	101102 108120	1
107	233T2220-26	....SEAL	101102 108120	1
110	233T2220-30	...CUP ASSY	101102	1
112	233T2220-32	....SEAL	101102	1
115	BACS21Y37R	...STUD ASSY-	101102	1
115	BACS21EE37R	...STUD ASSY-	108120	1
120	BACS21Y35R	...STUD ASSY-	101102	1
120	BACS21EE35R	...STUD ASSY-	108120	1
125	BACS21Y36R	...STUD ASSY-	101102	1
125	BACS21EE36R	...STUD ASSY-	108120	1
130	BACS21Y33R	...STUD ASSY-	101102	1
130	BACS21EE33R	...STUD ASSY-	108120	1
135	1127700	...WASHER SUPPLIER CODE: V60119 SPECIFICATION NUMBER: BACW10X4 OPTIONAL PART: 2600LW V71286	101102 108120	4
140	350-1	...SPACER- SUPPLIER CODE: V28277	101102 108120	10
145	012001-101	...SPACER-CRIMP SUPPLIER CODE: V28277	101102 108120	10

MISSING ITEM NUMBERS NOT APPLICABLE

– ITEM NOT ILLUSTRATED

BOEING PROPRIETARY - Copyright © - Unpublished Work - See title page for details.

FIG ITEM	PART NUMBER	1 2 3 4 5 6 7 NOMENCLATURE	EFFECT FROM TO	UNITS PER ASSY
2				
146	VNS1924CA2-8	...STUD-	102102	1
		SUPPLIER CODE:	108120	
		V5M902		
		SPECIFICATION NUMBER:		
		BACS53B1EA2		
		OPTIONAL PART:		
		VNS1924CA3-2-8		
		V92215		
		USED ON:		
		233N2222-98		
		233N2222-100		
		233N2222-103		
		233N2222-111		
		233N2222-114		
		233N2222-118		
		233N2222-120		
		233N2222-121		
		233N2222-122		
		233N2222-123		
		233N2222-125		
		233N2222-126		
		233N2222-129		
		233N2222-130		
		233N2222-131		
		233N2222-135		
		233N2222-149		
147	NAS1149D0316H	...WASHER-	102102	1
		USED ON:	108120	
		233N2222-100		
		233N2222-103		
		233N2222-111		
		233N2222-114		
		233N2222-118		
		233N2222-121		
		233N2222-122		
		233N2222-123		
		233N2222-125		
		233N2222-126		
		233N2222-129		
		233N2222-130		
		233N2222-131		
		233N2222-135		
		233N2222-149		

MISSING ITEM NUMBERS NOT APPLICABLE

– ITEM NOT ILLUSTRATED

BOEING PROPRIETARY - Copyright © - Unpublished Work - See title page for details.

FIG ITEM	PART NUMBER	1 2 3 4 5 6 7 NOMENCLATURE	EFFECT FROM TO	UNITS PER ASSY
2				
148	BRH10A3	...NUT-	102102	1
		SUPPLIER CODE:		
		V52828		
		SPECIFICATION NUMBER:		
		BACN10JC3		
		OPTIONAL PART:		
		H10-3BAC		
		V15653		
		NS202101-02		
		V80539		
		RMLH9075-3W		
		V72962		
		VN303A02		
		V92215		
		96-02		
		V80539		
		T6S1032J		
		V11815		
		USED ON:		
		233N2222-98		
		233N2222-100		
		233N2222-103		
		233N2222-111		
		233N2222-114		
		233N2222-118		
		233N2222-120		
148	BRH10C3D	...NUT-	102102 108120	1
		SUPPLIER CODE:		
		V52828		
		SPECIFICATION NUMBER:		
		BACN10JC3CD		
		OPTIONAL PART:		
		T6C1032JCD		
		V11815		
		NS202486-02		
		V80539		
		102LH9075-3W		
		V72962		
		H51650-3BAC		
		V15653		
		USED ON:		
		233N2222-122		
		233N2222-123		
		233N2222-125		
		233N2222-126		
		233N2222-129		
		233N2222-130		
		233N2222-135		

MISSING ITEM NUMBERS NOT APPLICABLE

– ITEM NOT ILLUSTRATED

BOEING PROPRIETARY - Copyright © - Unpublished Work - See title page for details.

FIG ITEM	PART NUMBER	1 2 3 4 5 6 7 NOMENCLATURE	EFFECT FROM TO	UNITS PER ASSY
2				
150	233T2218-6	...FOOTREST ASSY	101102 108120	1
		ATTACHING PARTS		
- 155	NAS514P1032-24	...SCREW-	101101	2
- 155	MS24693C280	...SCREW-	102102 108120	2
		-------*-------		
156	MS21209F1-30	....INSERT	101102 108120	2
157	233T2218-8	....FOOTREST	101102 108120	1
160	BACC49A1	...CLAMP- SUPPLIER CODE: V09922 SPECIFICATION NUMBER: BACC49A1 OPTIONAL PART: FAB278 V15805 H28-1 V34941 UP103 V6E102	101102	4
165	H21-1	...SPACER SUPPLIER CODE: V34941 SPECIFICATION NUMBER: BACS18AR1 OPTIONAL PART: FAB276A V15805 YHLZ1C2 V09922	101102 108120	2
167	WS1-4A6	...NUT SUPPLIER CODE: V04169 SPECIFICATION NUMBER: BACN10TL3A6	101102 108120	3
		ATTACHING PARTS		
- 168	BACR15BB4DC	...RIVET- SIZE DETERMINED ON INSTL.	101102 108120	6
		-------*-------		
170	233N2226-94	...PANEL ASSY-FWD	101101	1
170	233N2226-129	...PANEL ASSY-FWD	102102	1
170	233N2226-159	...PANEL ASSY-FWD USED ON: 233N2222-111 233N2222-122	102102 108120	1

MISSING ITEM NUMBERS NOT APPLICABLE

- ITEM NOT ILLUSTRATED

BOEING PROPRIETARY - Copyright © - Unpublished Work - See title page for details.

FIG ITEM	PART NUMBER	1 2 3 4 5 6 7 NOMENCLATURE	EFFECT FROM TO	UNITS PER ASSY
2				
		ATTACHING PARTS		
- 175	NAS514P832-8	...SCREW-	101101	5
- 175	MS24693C50	...SCREW-	102102 108120	5
		-------*-------		
180	GR1003	....NUT-INSERT SUPPLIER CODE: V0625B OPTIONAL PART: NAS1330A06K106	101102 108120	8
180	NAS1330A06K106	....NUT- OPTIONAL PART: GR1003 V0625B USED ON: 233N2226-159 233N2226-161 233N2226-165 233N2226-167 233N2226-177 233N2226-179	102102 108120	8
185	233N2226-80	....BACKPLATE- ALTERED FROM PART NUMBER: 233N2242-1	101101	1
185	233N2226-130	....BACKPLATE- ALTERED FROM PART NUMBER: 233N2242-1	102102 108120	1
190	233N2226-95	....FRAME- ALTERED FROM PART NUMBER: 233N2230-1	101101	1
190	233N2226-131	....FRAME- ALTERED FROM PART NUMBER: 233N2230-1	102102	1
190	233N2226-160	....FRAME- ALTERED FROM PART NUMBER: 233N2230-1	102102 108120	1
195	4039891-903	.INDICATOR-MACH AIRSPEED SUPPLIER CODE: V58960 SPECIFICATION NUMBER: S231T100-1 ELECTRICAL EQUIP NUMBER: N00041 COMPONENT MAINT MANUAL REF: 34-13-09 FOR BREAKDOWN SEE: 34-13-02-01	101101	RF

MISSING ITEM NUMBERS NOT APPLICABLE

– ITEM NOT ILLUSTRATED

BOEING PROPRIETARY - Copyright © - Unpublished Work - See title page for details.

FIG ITEM	PART NUMBER	1 2 3 4 5 6 7 NOMENCLATURE	EFFECT FROM TO	UNITS PER ASSY
2				
195	4039891-906	.INDICATOR-MACH AIRSPEED SUPPLIER CODE: V58960 SPECIFICATION NUMBER: S231T100-4 ELECTRICAL EQUIP NUMBER: N00041 COMPONENT MAINT MANUAL REF: 34-13-09 FOR BREAKDOWN SEE: 34-13-02-01	102102 108120	RF

MISSING ITEM NUMBERS NOT APPLICABLE

– ITEM NOT ILLUSTRATED

BOEING PROPRIETARY - Copyright © - Unpublished Work - See title page for details.

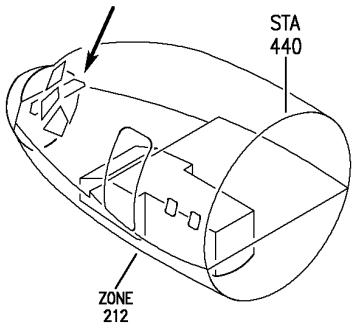

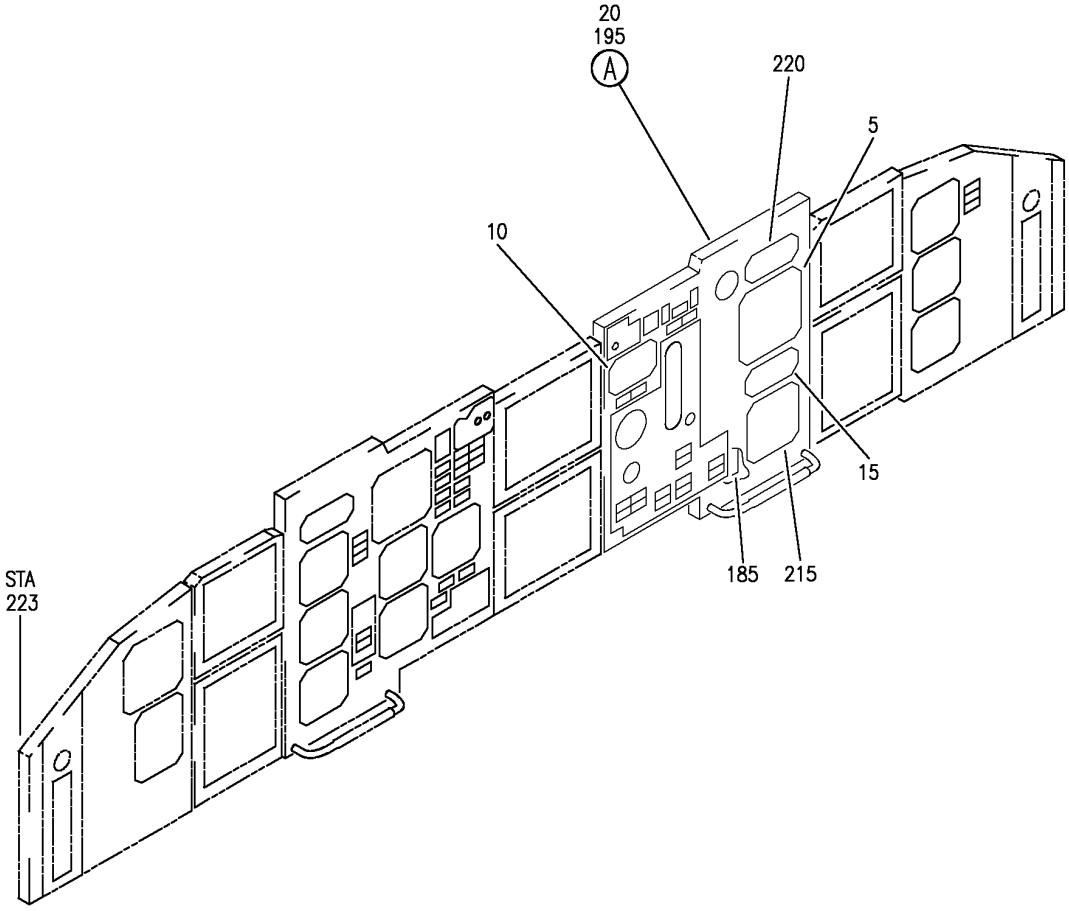

Y 31112603 SHT 1 REV 256

PANEL INSTL-P3-1 (FIRST OFFICER'S INSTRUMENT PANEL ONLY)
FIGURE 3 (SHEET 1)

BOEING PROPRIETARY - Copyright © - Unpublished Work - See title page for details.

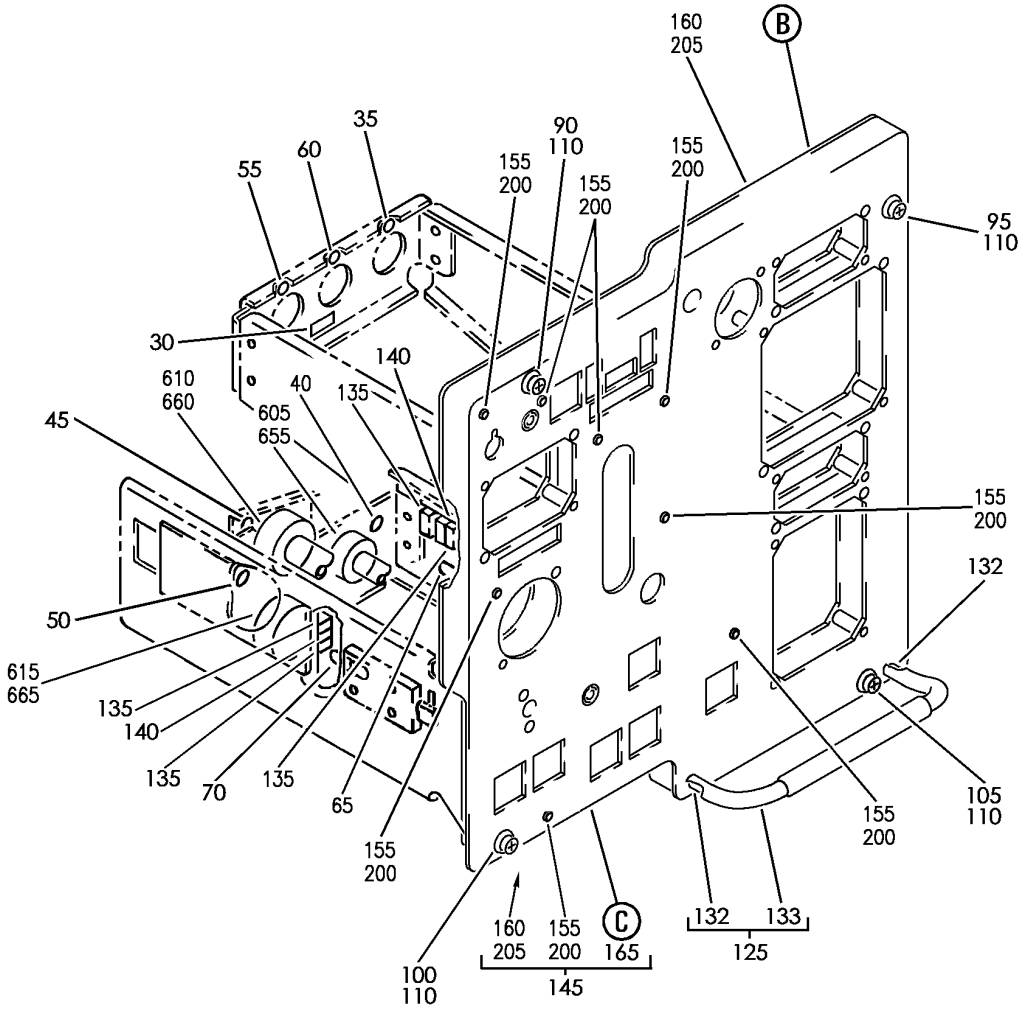

Y 31112603 SHT 2 REV 266

PANEL INSTL-P3-1 (FIRST OFFICER'S INSTRUMENT PANEL ONLY)
FIGURE 3 (SHEET 2)

BOEING PROPRIETARY - Copyright © - Unpublished Work - See title page for details.

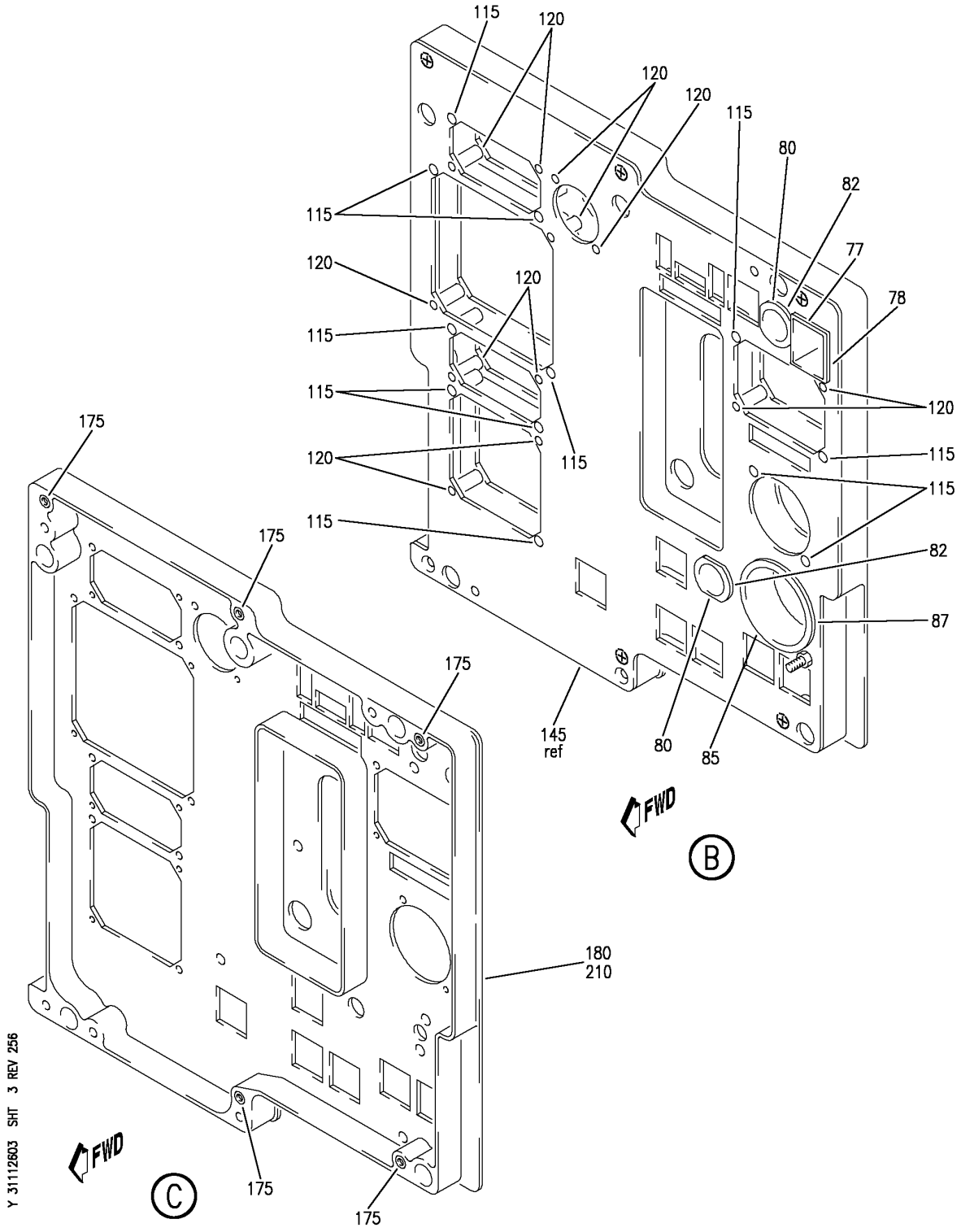

PANEL INSTL-P3-1 (FIRST OFFICER'S INSTRUMENT PANEL ONLY)
FIGURE 3 (SHEET 3)

BOEING PROPRIETARY - Copyright © - Unpublished Work - See title page for details.

FIG ITEM	PART NUMBER	1 2 3 4 5 6 7 NOMENCLATURE	EFFECT FROM TO	UNITS PER ASSY
3				
		PANEL INSTL-P3-1	504903	
		(FIRST OFFICER'S		
		INSTRUMENT PANEL ONLY)		
- 1	233N2103-254	PANEL INSTL-P3-1	504903	RF
		(FIRST OFFICER'S		
		INSTRUMENT PANEL ONLY)		
		POSITION DATA:		
		FWD		
		FOR NHA/OTHER SYS DET SEE:		
		25-10-00-15B		
5	4039891-907	.INDICATOR-MACH AIRSPEED	504903	RF
		SUPPLIER CODE:		
		V58960		
		SPECIFICATION NUMBER:		
		S231T100-5		
		ELECTRICAL EQUIP NUMBER:		
		N00041		
		COMPONENT MAINT MANUAL REF:		
		34-13-09		
		FOR BREAKDOWN SEE:		
		34-13-02-01		
10	143D6354G2	.PANEL ASSY-THRUST MODE	504903	RF
		SELECT		
		SUPPLIER CODE:		
		V89954		
		FUNCTIONAL DESCRIPTION:		
		ALLOWS CREW TO SELECT		
		THRUST LIMIT COMPUTATION		
		MODES		
		SPECIFICATION NUMBER:		
		S241T200-154		
		ELECTRICAL EQUIP NUMBER:		
		M10258		
		COMPONENT MAINT MANUAL REF:		
		22-31-24		
		FOR BREAKDOWN SEE:		
		22-31-02-01		
15	622-5990-302	.INDICATOR-DUAL DISTANCE	504903	RF
		SUPPLIER CODE:		
		V4V792		
		SPECIFICATION NUMBER:		
		S242T403-302		
		ELECTRICAL EQUIP NUMBER:		
		N10031		
		COMPONENT MAINT MANUAL REF:		
		34-22-76		
		FOR BREAKDOWN SEE:		
		34-55-03-01		

MISSING ITEM NUMBERS NOT APPLICABLE

- ITEM NOT ILLUSTRATED

BOEING PROPRIETARY - Copyright © - Unpublished Work - See title page for details.

FIG ITEM	PART NUMBER	1 2 3 4 5 6 7 NOMENCLATURE	EFFECT FROM TO	UNITS PER ASSY
3				
20	233N2222-326	.MODULE ASSY- COMPONENT MAINT MANUAL REF: 31-11-49 PRE ALERT SB: 33A0044 FOR OTHER SYS DETAILS SEE: 22-14-01-03 22-31-02-01 26-17-51-05 27-51-57-03 27-58-00-02 27-81-00-01 31-25-01-06 32-35-52-03 32-41-52-02 32-46-00-01 32-61-51-03 33-13-57-01A 34-13-02-01 34-46-51-02 34-55-03-01	504903	1
20	233N2222-334	.MODULE ASSY- COMPONENT MAINT MANUAL REF: 31-11-49 PRE ALERT SB: 33A0044 FOR OTHER SYS DETAILS SEE: 22-14-01-03 22-31-02-01 26-17-51-05 27-58-00-02 27-51-57-03 27-81-00-01 31-25-01-06 32-35-52-03 32-41-52-02 32-46-00-01 32-61-51-03 33-13-57-01A 34-13-02-01 34-46-51-02 34-55-03-01	504903	1

MISSING ITEM NUMBERS NOT APPLICABLE

– ITEM NOT ILLUSTRATED

BOEING PROPRIETARY - Copyright © - Unpublished Work - See title page for details.

FIG ITEM	PART NUMBER	1 2 3 4 5 6 7 NOMENCLATURE	EFFECT FROM TO	UNITS PER ASSY
3				
20	233N2222-347	.MODULE ASSY- COMPONENT MAINT MANUAL REF: 31-11-49 PRE ALERT SB: 33A0044 FOR OTHER SYS DETAILS SEE: 22-14-01-03 22-31-02-01 26-17-51-05 27-58-00-02 27-51-57-03 27-81-00-01 31-25-01-06 32-35-52-03 32-41-52-02 32-46-00-01 32-61-51-03 33-13-57-01A 34-13-02-01 34-46-51-02 34-55-03-01	504903	1
20	233N2222-1326	.MODULE ASSY- COMPONENT MAINT MANUAL REF: 31-11-49 POST ALERT SB: 33A0044 FOR OTHER SYS DETAILS SEE: 22-14-01-03 22-31-02-01 26-17-51-05 27-51-57-03 27-58-00-02 27-81-00-01 31-25-01-06 32-35-52-03 32-41-52-02 32-46-00-01 32-61-51-03 33-13-57-01A 34-13-02-01 34-46-51-02 34-55-03-01	504903	1

MISSING ITEM NUMBERS NOT APPLICABLE

– ITEM NOT ILLUSTRATED

BOEING PROPRIETARY - Copyright © - Unpublished Work - See title page for details.

FIG ITEM	PART NUMBER	1 2 3 4 5 6 7 NOMENCLATURE	EFFECT FROM TO	UNITS PER ASSY
3				
20	233N2222-1334	.MODULE ASSY- COMPONENT MAINT MANUAL REF: 31-11-49 POST ALERT SB: 33A0044 FOR OTHER SYS DETAILS SEE: 22-14-01-03 22-31-02-01 26-17-51-05 27-51-57-03 27-58-00-02 27-81-00-01 31-25-01-06 32-35-52-03 32-41-52-02 32-46-00-01 32-61-51-03 33-13-57-01A 34-13-02-01 34-46-51-02 34-55-03-01	504903	1
20	233N2222-1347	.MODULE ASSY- COMPONENT MAINT MANUAL REF: 31-11-49 POST ALERT SB: 33A0044 FOR OTHER SYS DETAILS SEE: 22-14-01-03 22-31-02-01 26-17-51-05 27-51-57-03 27-58-00-02 27-81-00-01 31-25-01-06 32-35-52-03 32-41-52-02 32-46-00-01 32-61-51-03 33-13-57-01A 34-13-02-01 34-46-51-02 34-55-03-01	504903	1
- 25	233N2222-105	..MODULE ASSY- USED ON: 233N2222-326 PRE ALERT SB: 33A0044	504903	RF

MISSING ITEM NUMBERS NOT APPLICABLE

- ITEM NOT ILLUSTRATED

BOEING PROPRIETARY - Copyright © - Unpublished Work - See title page for details.

FIG ITEM	PART NUMBER	1 2 3 4 5 6 7 NOMENCLATURE	EFFECT FROM TO	UNITS PER ASSY
3				
- 25	233N2222-116	..MODULE ASSY- USED ON: 233N2222-334 PRE ALERT SB: 33A0044	504903	RF
- 25	233N2222-127	..MODULE ASSY- USED ON: 233N2222-347 PRE ALERT SB: 33A0044	504903	RF
- 25	233N2222-1105	..MODULE ASSY- USED ON: 233N2222-1326 POST ALERT SB: 33A0044	504903	RF
- 25	233N2222-1116	..MODULE ASSY- USED ON: 233N2222-1334 POST ALERT SB: 33A0044	504903	RF
- 25	233N2222-1127	..MODULE ASSY- USED ON: 233N2222-1347 POST ALERT SB: 33A0044	504903	RF
30	BAC27NEL0340	...DECAL- PLACARD CONTENT: AP0301	504903	1
35	BAC27NEL0187	...DECAL- PLACARD CONTENT: 1	504903	1
40	BAC27NEL0188	...DECAL- PLACARD CONTENT: 2	504903	1
45	BAC27NEL0189	...DECAL- PLACARD CONTENT: 3	504903	1
50	BAC27NEL0190	...DECAL- PLACARD CONTENT: 4	504903	1
55	BAC27NEL0191	...DECAL- PLACARD CONTENT: 5	504903	1
60	BAC27NEL0192	...DECAL- PLACARD CONTENT: 6	504903	1
65	BAC27NFDE0094	...DECAL- PLACARD CONTENT: TB0071	504903	1

MISSING ITEM NUMBERS NOT APPLICABLE

- ITEM NOT ILLUSTRATED

BOEING PROPRIETARY - Copyright © - Unpublished Work - See title page for details.

FIG ITEM	PART NUMBER	1 2 3 4 5 6 7 NOMENCLATURE	EFFECT FROM TO	UNITS PER ASSY
3				
70	BAC27NFDE0093	...DECAL-	504903	1
		PLACARD CONTENT:		
		TB0070		
77	233T2220-30	...CUP ASSY	504903	1
78	233T2220-32	....SEAL	504903	1
80	233T2220-10	...CUP ASSY	504903	2
82	233T2220-12	....SEAL	504903	1
85	233T2220-24	...CUP ASSY	504903	1
87	233T2220-26	....SEAL	504903	1
90	BACS21Y37R	...STUD ASSY-	504903	1
95	BACS21Y35R	...STUD ASSY-	504903	1
100	BACS21Y36R	...STUD ASSY-	504903	1
105	BACS21Y33R	...STUD ASSY-	504903	1
110	1127700	...WASHER	504903	4
		SUPPLIER CODE:		
		V60119		
		SPECIFICATION NUMBER:		
		BACW10X4		
		OPTIONAL PART:		
		2600LW		
		V71286		
115	350-1	...SPACER-	504903	12
		SUPPLIER CODE:		
		V28277		
120	012001-101	...SPACER-CRIMP	504903	12
		SUPPLIER CODE:		
		V28277		
125	233T2218-6	...FOOTREST ASSY	504903	1
		ATTACHING PARTS		
- 130	NAS514P1032-24	...SCREW	504903	2
		-------*-------		
132	MS21209F1-30	....INSERT	504903	2
133	233T2218-8	....FOOTREST	504903	1
135	BACC49A1	...CLAMP-	504903	4
		SUPPLIER CODE:		
		V09922		
		SPECIFICATION NUMBER:		
		BACC49A1		
		OPTIONAL PART:		
		FAB278		
		V15805		
		H28-1		
		V34941		
		UP103		
		V6E102		

MISSING ITEM NUMBERS NOT APPLICABLE

- ITEM NOT ILLUSTRATED

BOEING PROPRIETARY - Copyright © - Unpublished Work - See title page for details.

	FIG ITEM	PART NUMBER	1 2 3 4 5 6 7 NOMENCLATURE	EFFECT FROM TO	UNITS PER ASSY
	3				
	140	H21-1	...SPACER SUPPLIER CODE: V34941 SPECIFICATION NUMBER: BACS18AR1 OPTIONAL PART: FAB276A V15805 YHLZ1C2 V09922	504903	2
	145	233N2226-144	...PANEL ASSY- POSITION DATA: FWD	504903	1
	145	233N2226-169	...PANEL ASSY- POSITION DATA: FWD ATTACHING PARTS	504903	1
-	150	NAS514P832-8	...SCREW -------*-------	504903	7
	155	GR1003	....NUT-INSERT SUPPLIER CODE: V0625B	504903	8
	160	233N2226-145	....BACKPLATE	504903	1
R	165	233N2226-146	....FRAME	504903	1
R	165	233N2226-170	....FRAME	504903	1
-	170	233N2230-1	.....FRAME	504903	1
	175	MS21209C0825P	.....INSERT	504903	5
	180	233N2230-2	.....FRAME	504903	1

MISSING ITEM NUMBERS NOT APPLICABLE

- ITEM NOT ILLUSTRATED

BOEING PROPRIETARY - Copyright © - Unpublished Work - See title page for details.

	FIG ITEM	PART NUMBER	1 2 3 4 5 6 7 NOMENCLATURE	EFFECT FROM TO	UNITS PER ASSY
	3				
R	215	2610-08-1	.CLOCK ASSY-	504903	RF
R			SUPPLIER CODE:		
R			V52013		
R			FUNCTIONAL DESCRIPTION:		
R			DIGITAL ELECTRONIC		
R			CHRONOMETER, SHOWS		
R			ELAPSED TIME,		
R			CHRONOGRAPH TIME, DATE		
R			AND GREENWICH MEAN TIME.		
R			SPECIFICATION NUMBER:		
R			60B00303-107		
R			ELECTRICAL EQUIP NUMBER:		
R			N00002		
R			COMPONENT MAINT MANUAL REF:		
R			31-21-08		
R			QUALIFIED I/W DATA:		
R			2610-08-1(60B00303-107)		
R			I/W		
R			65806-002-1(S231T120-1)		
R			IN SHIPSETS, FOR ALL FMC		
R			EXCEPT S242T102-451 WITH		
R			S/W PS4052970-95X, WHERE		
R			X CAN BE ANY VALUE, AND		
R			S242T102-455.		
R			65807-050-1 AND		
R			2610-08-1 ARE		
R			INTERCHANGEABLE AS A		
R			SET ONLY		
R			FOR BREAKDOWN SEE:		
R			31-25-01-06		
	220	622-5374-003	.INDICATOR ASSY-AUTOLAND	504903	RF
			STATUS		
			SUPPLIER CODE:		
			V4V792		
			SPECIFICATION NUMBER:		
			S241T120-2		
			ELECTRICAL EQUIP NUMBER:		
			N00071		
			COMPONENT MAINT MANUAL REF:		
			22-14-70		
			FOR BREAKDOWN SEE:		
			22-14-01-03		
	- 600	286N0002-331	WIRE BUNDLE ASSY	504903	RF
	605	BACC45FN14-15P6	.CONNECTOR-	504903	1
			ELECTRICAL EQUIP NUMBER:		
			D42174J		
			WIRING DIAGRAM REF:		
			323511		

MISSING ITEM NUMBERS NOT APPLICABLE

– ITEM NOT ILLUSTRATED

BOEING PROPRIETARY - Copyright © - Unpublished Work - See title page for details.

FIG ITEM	PART NUMBER	1 2 3 4 5 6 7 NOMENCLATURE	EFFECT FROM TO	UNITS PER ASSY
3				
610	BACC45FN22-55P8	.RECEPTACLE- ELECTRICAL EQUIP NUMBER: D40834J WIRING DIAGRAM REF: 323111	504903	1
615	BACC45FN22-55P	..CONNECTOR- ELECTRICAL EQUIP NUMBER: D40836J WIRING DIAGRAM REF: 326112	504903	1
- 650	286N0003-355	WIRE BUNDLE ASSY- REWORKED BY ALERT SB: 34A0222	504903	RF
655	BACC45FT14D15S6	.CONNECTOR- ELECTRICAL EQUIP NUMBER: D42174P WIRING DIAGRAM REF: 323511	504903	1
- 660	BACC45FT22D55S8	.PLUG- ELECTRICAL EQUIP NUMBER: D40834P WIRING DIAGRAM REF: 223112	504903	1
665	BACC45FT22D55S	.CONNECTOR- ELECTRICAL EQUIP NUMBER: D40836P WIRING DIAGRAM REF: 223211	504903	1

MISSING ITEM NUMBERS NOT APPLICABLE

- ITEM NOT ILLUSTRATED

BOEING PROPRIETARY - Copyright © - Unpublished Work - See title page for details.

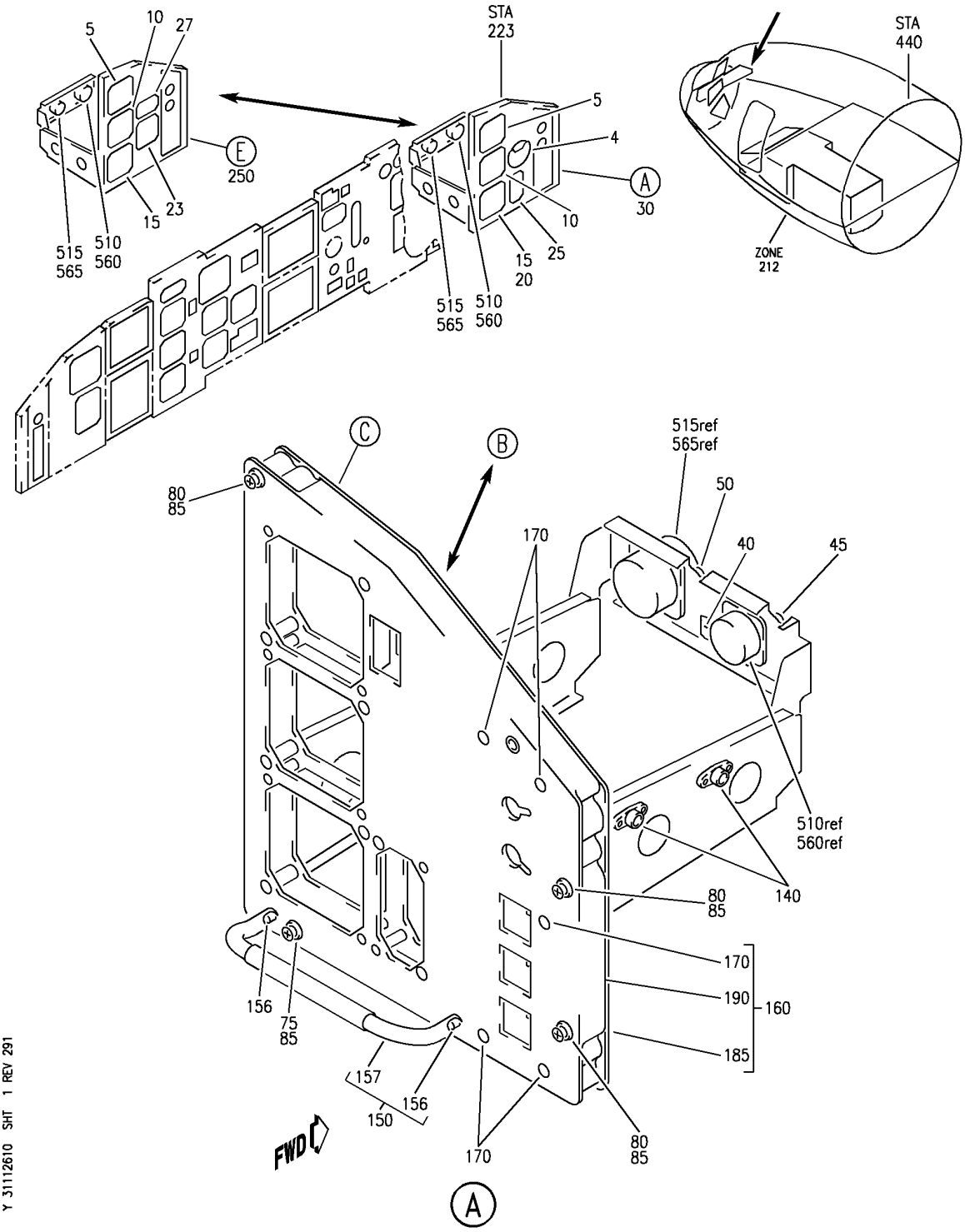

PANEL INSTL-P3-3 (FIRST OFFICER'S INSTRUMENT PANEL ONLY)
FIGURE 10 (SHEET 1)

BOEING PROPRIETARY - Copyright © - Unpublished Work - See title page for details.

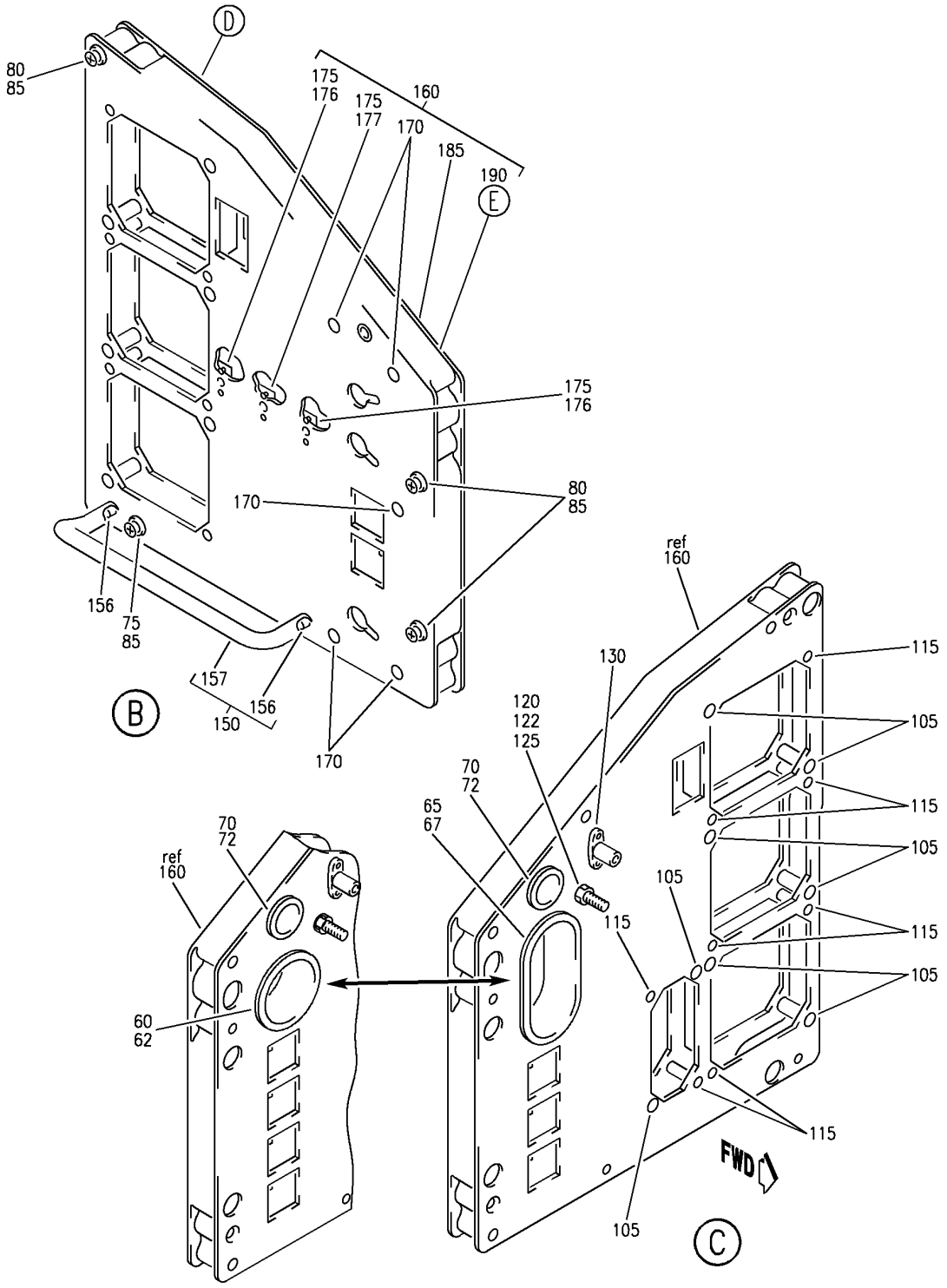

PANEL INSTL-P3-3 (FIRST OFFICER'S INSTRUMENT PANEL ONLY)
FIGURE 10 (SHEET 2)

BOEING PROPRIETARY - Copyright © - Unpublished Work - See title page for details.

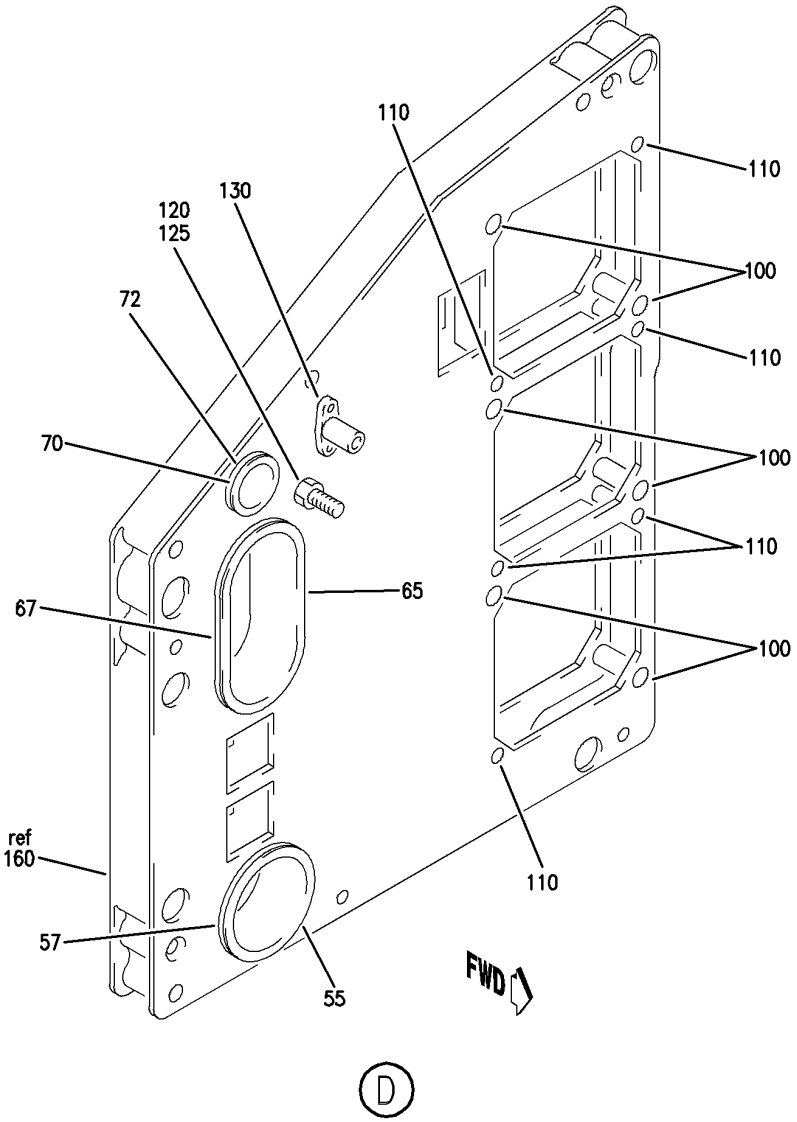

Y 31112610 SHT 3 REV 246

PANEL INSTL-P3-3 (FIRST OFFICER'S INSTRUMENT PANEL ONLY)
FIGURE 10 (SHEET 3)

BOEING PROPRIETARY - Copyright © - Unpublished Work - See title page for details.

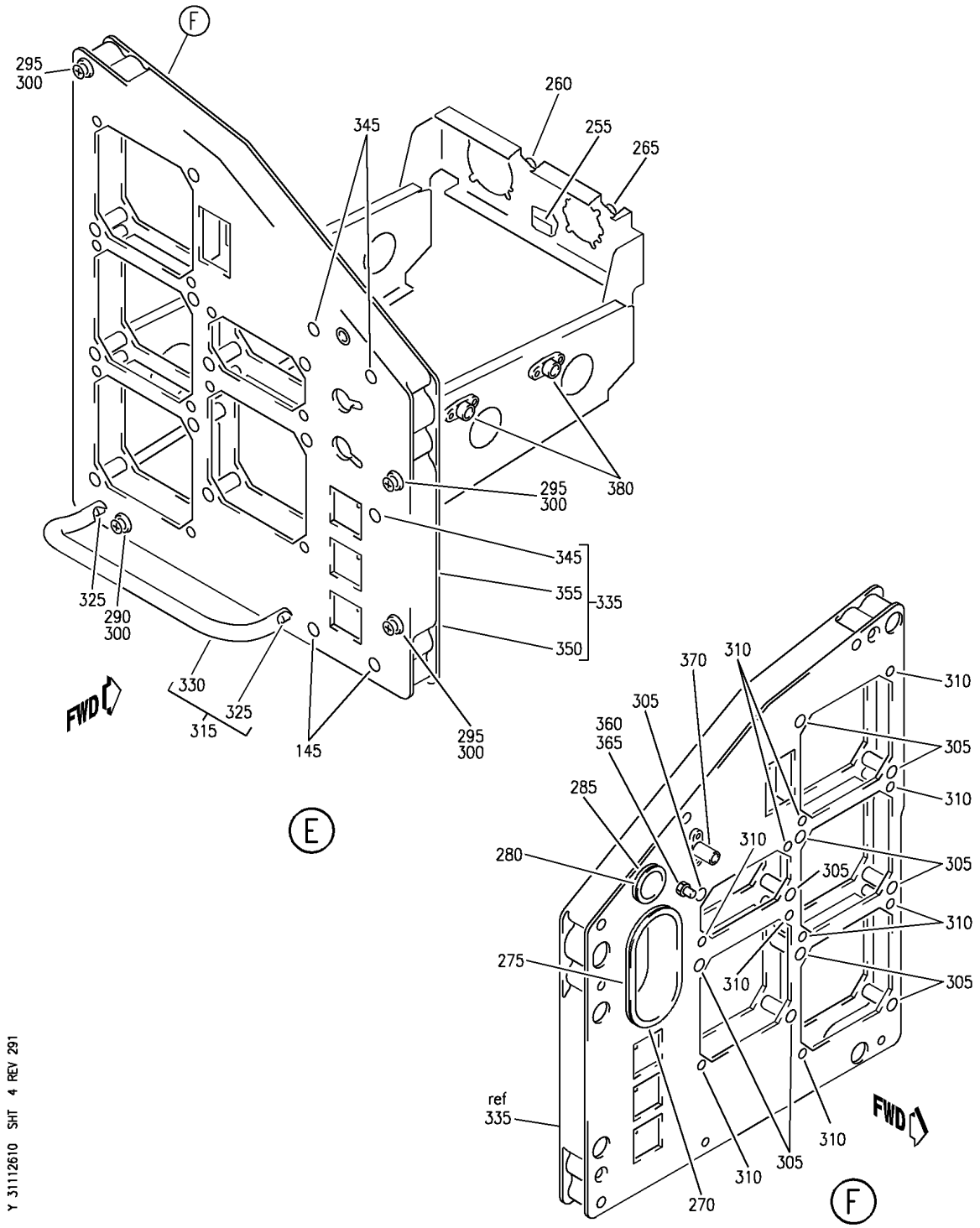

Y 31112610 SHT 4 REV 291

PANEL INSTL-P3-3 (FIRST OFFICER'S INSTRUMENT PANEL ONLY)
FIGURE 10 (SHEET 4)

BOEING PROPRIETARY - Copyright © - Unpublished Work - See title page for details.

FIG ITEM	PART NUMBER	1 2 3 4 5 6 7 NOMENCLATURE	EFFECT FROM TO	UNITS PER ASSY
10				
		PANEL INSTL-P3-3	101102	
		(FIRST OFFICER'S	108120	
		INSTRUMENT PANEL ONLY)	504903	
- 1	233N2103-28	PANEL INSTL-P3-3	108120	RF
		(FIRST OFFICER'S		
		INSTRUMENT PANEL ONLY)		
		FOR NHA/OTHER SYS DET SEE:		
		25-10-00-15B		
- 1	233N2103-55	PANEL INSTL-P3-3	504903	RF
		(FIRST OFFICER'S		
		INSTRUMENT PANEL ONLY)		
		FOR NHA/OTHER SYS DET SEE:		
		25-10-00-15B		
- 1	233N2103-73	PANEL INSTL-P3-3	101102	RF
		(FIRST OFFICER'S		
		INSTRUMENT PANEL ONLY)		
		FOR NHA/OTHER SYS DET SEE:		
		25-10-00-15B		
5	4039892-904	.INDICATOR ASSY-ALTM	108120	RF
		SUPPLIER CODE:	504903	
		V58960		
		SPECIFICATION NUMBER:		
		S231T101-1		
		ELECTRICAL EQUIP NUMBER:		
		N00048		
		COMPONENT MAINT MANUAL REF:		
		34-13-08		
		FOR BREAKDOWN SEE:		
		34-13-01-02		
5	4039892-907	.INDICATOR ASSY-ALTM	101102	RF
		SUPPLIER CODE:		
		V58960		
		SPECIFICATION NUMBER:		
		S231T101-4		
		ELECTRICAL EQUIP NUMBER:		
		N00048		
		COMPONENT MAINT MANUAL REF:		
		34-13-08		
		FOR BREAKDOWN SEE:		
		34-13-01-02		

MISSING ITEM NUMBERS NOT APPLICABLE

- ITEM NOT ILLUSTRATED

BOEING PROPRIETARY - Copyright © - Unpublished Work - See title page for details.

	FIG ITEM	PART NUMBER	1 2 3 4 5 6 7 NOMENCLATURE	EFFECT FROM TO	UNITS PER ASSY
	10				
	10	4039893-902	.INDICATOR-VERT SPEED SUPPLIER CODE: V58960 SPECIFICATION NUMBER: S231T102-1 ELECTRICAL EQUIP NUMBER: N00049 COMPONENT MAINT MANUAL REF: 34-13-07 FOR BREAKDOWN SEE: 34-22-06-01	101102 108120 504903	RF
R	15	2610-08-1	.CLOCK ASSY- SUPPLIER CODE: V52013 FUNCTIONAL DESCRIPTION: DIGITAL ELECTRONIC CHRONOMETER, SHOWS ELAPSED TIME, CHRONOGRAPH TIME, DATE AND GREENWICH MEAN TIME. SPECIFICATION NUMBER: 60B00303-107 ELECTRICAL EQUIP NUMBER: N00042 COMPONENT MAINT MANUAL REF: 31-21-08 QUALIFIED I/W DATA: 2610-08-1(60B00303-107) I/W 65806-002-1(S231T120-1) IN SHIPSETS, FOR ALL FMC EXCEPT S242T102-451 WITH S/W PS4052970-95X, WHERE X CAN BE ANY VALUE, AND S242T102-455. 65807-050-1 AND 2610-08-1 ARE INTERCHANGEABLE AS A SET ONLY FOR BREAKDOWN SEE: 31-25-01-03	101102 108120	RF

MISSING ITEM NUMBERS NOT APPLICABLE

– ITEM NOT ILLUSTRATED

BOEING PROPRIETARY - Copyright © - Unpublished Work - See title page for details.

FIG ITEM	PART NUMBER	1 2 3 4 5 6 7 NOMENCLATURE	EFFECT FROM TO	UNITS PER ASSY
10				
20	622-5002-203	.INDICATOR ASSY-RADIO MAGNETIC/DME SUPPLIER CODE: V4V792 SPECIFICATION NUMBER: S242T403-204 ELECTRICAL EQUIP NUMBER: N10026 COMPONENT MAINT MANUAL REF: 34-22-74 FOR BREAKDOWN SEE: 34-22-05-01B	504903	RF
25	622-6006-002	.ANNUNCIATOR ASSY-RADIO MAGNETIC IND BRG SUPPLIER CODE: V4V792 SPECIFICATION NUMBER: S242T403-401 ELECTRICAL EQUIP NUMBER: N10027 COMPONENT MAINT MANUAL REF: 34-22-77 FOR BREAKDOWN SEE: 34-22-07-01	504903	RF
30	233N2223-306	.MODULE ASSY- COMPONENT MAINT MANUAL REF: 31-11-50 QUALIFIED I/W DATA: 233N2223-338 CAN REPLACE 233N2223-306 FOR NT383-NT399 AIRCRAFT ONLY. FOR OTHER SYS DETAILS SEE: 31-25-01-03 33-13-57-01A 34-12-01-03 34-13-01-02 34-21-02-02 34-22-02-02 34-22-06-01 34-32-00-02 34-57-00-01 34-61-02-02	101102 108120	1

MISSING ITEM NUMBERS NOT APPLICABLE

– ITEM NOT ILLUSTRATED

BOEING PROPRIETARY - Copyright © - Unpublished Work - See title page for details.

	FIG ITEM	PART NUMBER	1 2 3 4 5 6 7 NOMENCLATURE	EFFECT FROM TO	UNITS PER ASSY
	10				
	30	233N2223-313	.MODULE ASSY-	504903	1
			COMPONENT MAINT MANUAL REF:		
			31-11-50		
			FOR OTHER SYS DETAILS SEE:		
			33-13-57-01A		
			34-12-01-03		
			34-13-01-02		
			34-21-02-02		
			34-22-02-02		
			34-22-06-01		
			34-32-00-02		
			34-57-00-01		
			34-61-02-02		
-	35	233N2223-22	..MODULE ASSY-	101102	RF
				108120	
-	35	233N2223-29	..MODULE ASSY	504903	RF
	40	BAC27NEL0341	...DECAL-	101102	1
			PLACARD CONTENT:	108120	
			AP0303	504903	
	45	BAC27NEL0187	...DECAL-	101102	1
			PLACARD CONTENT:	108120	
			1	504903	
	50	BAC27NEL0188	...DECAL-	101102	1
			PLACARD CONTENT:	108120	
			2	504903	
	65	233T2220-33	...CUP ASSY	101102	1
				108120	
				504903	
	67	233T2220-35	....SEAL	101102	1
				108120	
				504903	
	70	233T2220-4	...CUP ASSY	101102	1
				108120	
				504903	
	72	233T2220-6	....SEAL	101102	1
				108120	
				504903	
R	75	BACS21Y33R	...STUD ASSY	504903	1
R	75	BACS21EE33R	...STUD ASSY	101102	1
R				108120	
R	80	BACS21Y34R	...STUD ASSY	504903	3
R	80	BACS21EE34R	...STUD ASSY	101102	3
R				108120	

MISSING ITEM NUMBERS NOT APPLICABLE

- ITEM NOT ILLUSTRATED

BOEING PROPRIETARY - Copyright © - Unpublished Work - See title page for details.

FIG ITEM	PART NUMBER	1 2 3 4 5 6 7 NOMENCLATURE	EFFECT FROM TO	UNITS PER ASSY
10				
85	1127700	...WASHER	101102	4
		SUPPLIER CODE:	108120	
		V60119	504903	
		SPECIFICATION NUMBER:		
		BACW10X4		
		OPTIONAL PART:		
		2600LW		
		V71286		
100	350-1	...SPACER-	101102	6
		SUPPLIER CODE:	108120	
		V28277		
105	350-1	...SPACER-	504903	8
		SUPPLIER CODE:		
		V28277		
110	012001-101	...SPACER-CRIMP	101102	6
		SUPPLIER CODE:	108120	
		V28277		
115	012001-101	...SPACER-CRIMP	504903	8
		SUPPLIER CODE:		
		V28277		
R 120	BRH10A3	...NUT	504903	1
R		SUPPLIER CODE:		
R		V52828		
R		SPECIFICATION NUMBER:		
R		BACN10JC3		
R		OPTIONAL PART:		
R		H10-3BAC		
R		V15653		
R		NS202101-02		
R		V80539		
R		RMLH9075-3W		
R		V72962		
R		VN303A02		
R		V92215		
R		96-02		
R		V80539		
R		T6S1032J		
R		V11815		

MISSING ITEM NUMBERS NOT APPLICABLE

– ITEM NOT ILLUSTRATED

BOEING PROPRIETARY - Copyright © - Unpublished Work - See title page for details.

	FIG ITEM	PART NUMBER	1 2 3 4 5 6 7 NOMENCLATURE	EFFECT FROM TO	UNITS PER ASSY
	10				
R	120	BRH10C3D	...NUT	101102	1
R			SUPPLIER CODE:	108120	
R			V52828		
R			SPECIFICATION NUMBER:		
R			BACN10JC3CD		
R			OPTIONAL PART:		
R			T6C1032JCD		
R			V11815		
R			NS202486-02		
R			V80539		
R			102LH9075-3W		
R			V72962		
R			H51650-3BAC		
R			V15653		
	125	VNS1924CA2-8	...STUD	101102	1
			SUPPLIER CODE:	108120	
			V5M902	504903	
			SPECIFICATION NUMBER:		
			BACS53B1EA2		
			OPTIONAL PART:		
			VNS1924CA3-2-8		
			V92215		
	130	WSI4-22	...NUT	101102	1
			SUPPLIER CODE:	108120	
			V04169	504903	
			SPECIFICATION NUMBER:		
			BACN10TL3-22		
			ATTACHING PARTS		
-	135	BACR15BB3AD	...RIVET-	504903	2
			SIZE DETERMINED ON INSTL.		
-	135	BACR15BB3ADC	...RIVET-	101102	2
			SIZE DETERMINED ON INSTL.	108120	
			-------*-------		
	140	WSI4-6	...NUTPLATE	101102	2
			SUPPLIER CODE:	108120	
			V04169	504903	
			SPECIFICATION NUMBER:		
			BACN10TL3-6		
			ATTACHING PARTS		
-	145	BACR15BA3AD	...RIVET-	504903	4
			SIZE DETERMINED ON INSTL.		
-	145	BACR15BA3ADC	...RIVET-	101102	4
			SIZE DETERMINED ON INSTL.	108120	
			-------*-------		
	150	233T2218-2	...FOOTREST ASSY	101102	1
				108120	
				504903	

MISSING ITEM NUMBERS NOT APPLICABLE

- ITEM NOT ILLUSTRATED

BOEING PROPRIETARY - Copyright © - Unpublished Work - See title page for details.

	FIG ITEM	PART NUMBER	1 2 3 4 5 6 7 NOMENCLATURE	EFFECT FROM TO	UNITS PER ASSY
	10				
			ATTACHING PARTS		
	- 155	NAS514P1032-24	...SCREW	101102 108120	2
R	- 155	MS24693C280	...SCREW	504903	2
			-------*-------		
	156	MS21209F1-30	....INSERT	101102 108120 504903	2
	157	233T2218-4	....FOOTREST	101102 108120 504903	1
	160	233N2227-19	...PANEL ASSY-FWD	101102 108120	1
	160	233N2227-16	...PANEL ASSY-FWD	504903	1
			ATTACHING PARTS		
	- 165	NAS514P832-8	...SCREW	101102 108120	4
R	- 165	MS24693C50	...SCREW	504903	4
			-------*-------		
	170	GR1003	....NUT-INSERT SUPPLIER CODE: V0625B OPTIONAL PART: NAS1330A06K106	101102 108120 504903	5
	170	NAS1330A06K106	....NUT- OPTIONAL PART: GR1003 V0625B	101102 108120	5
	185	233N2227-21	....BACKPLATE- ALTERED FROM PART NUMBER: 233N2243-1 V89954	101102 108120	1
	185	233N2227-18	....BACKPLATE- ALTERED FROM PART NUMBER: 233N2243-1 V89954	504903	1
	190	233N2227-20	....FRAME ASSY- ALTERED FROM PART NUMBER: 233N2231-1 V89954	101102 108120	1
	190	233N2227-17	....FRAME ASSY- ALTERED FROM PART NUMBER: 233N2231-1 V89954	504903	1
	- 502	286N0033-347	WIRE BUNDLE ASSY	504903	RF
	- 502	286N0033-349	WIRE BUNDLE ASSY	101101	RF
	- 502	286N0033-351	WIRE BUNDLE ASSY	102102	RF
	- 505	286N0033-377	WIRE BUNDLE ASSY	108120	RF

MISSING ITEM NUMBERS NOT APPLICABLE

- ITEM NOT ILLUSTRATED

BOEING PROPRIETARY - Copyright © - Unpublished Work - See title page for details.

FIG ITEM	PART NUMBER	1 2 3 4 5 6 7 NOMENCLATURE	EFFECT FROM TO	UNITS PER ASSY
10				
510	BACC45FN16-24P7	.CONNECTOR- ELECTRICAL EQUIP NUMBER: D40249J WIRING DIAGRAM REF: 331312	101102 108120 504903	1
515	BACC45FN22-55P	.CONNECTOR- ELECTRICAL EQUIP NUMBER: D40525J WIRING DIAGRAM REF: 342227	101102 108120 504903	1
- 550	286N0003-323	WIRE BUNDLE ASSY- REWORKED BY ALERT SB: 34A0222	101101	RF
- 552	286N0003-355	WIRE BUNDLE ASSY- REWORKED BY ALERT SB: 34A0222	504903	RF
- 553	286N0003-359	WIRE BUNDLE ASSY- REWORKED BY ALERT SB: 34A0222	102102	RF
- 553	286N0003-384	WIRE BUNDLE ASSY- REWORKED BY ALERT SB: 34A0222	108120	RF
560	BACC45FT16A24S7	.CONNECTOR- POSITION DATA: POSITION 01 ELECTRICAL EQUIP NUMBER: D40249P WIRING DIAGRAM REF: 342228 REWORKED BY ALERT SB: 34A0222	101102 108120 504903	1
565	BACC45FT22A55S	.CONNECTOR- ELECTRICAL EQUIP NUMBER: D40525P WIRING DIAGRAM REF: 342228 REWORKED BY ALERT SB: 34A0222	101102 108120 504903	1

MISSING ITEM NUMBERS NOT APPLICABLE

- ITEM NOT ILLUSTRATED

BOEING PROPRIETARY - Copyright © - Unpublished Work - See title page for details.

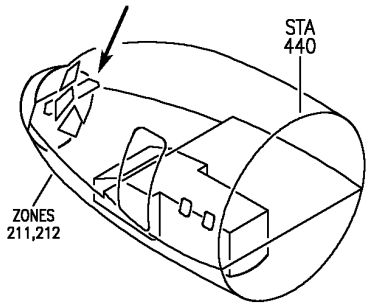

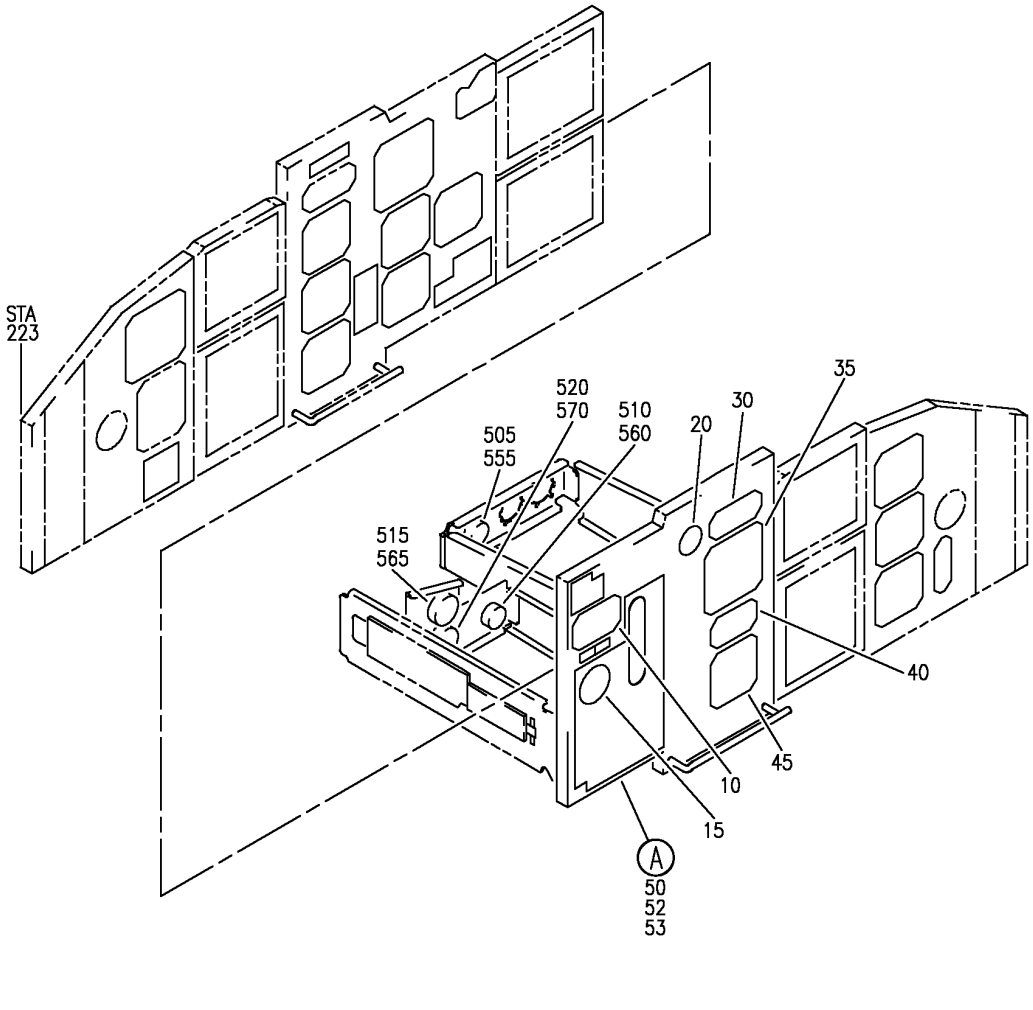

PANEL INSTL-FIRST OFFICERS P3-1 FWD (INDICATING AND RECORDING ONLY)
FIGURE 27 (SHEET 1)

BOEING PROPRIETARY - Copyright © - Unpublished Work - See title page for details.

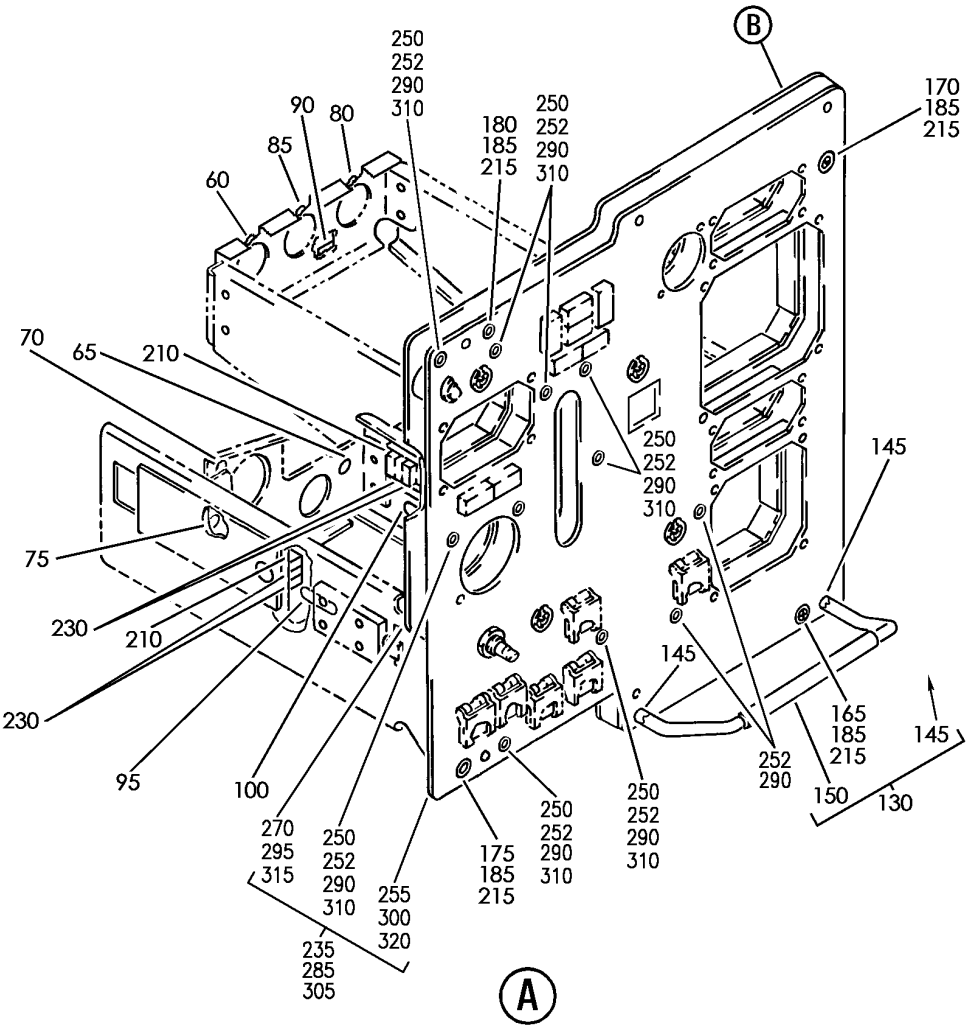

Y 31112627 SHT 2 REV 271

PANEL INSTL-FIRST OFFICERS P3-1 FWD (INDICATING AND RECORDING ONLY)
FIGURE 27 (SHEET 2)

BOEING PROPRIETARY - Copyright © - Unpublished Work - See title page for details.

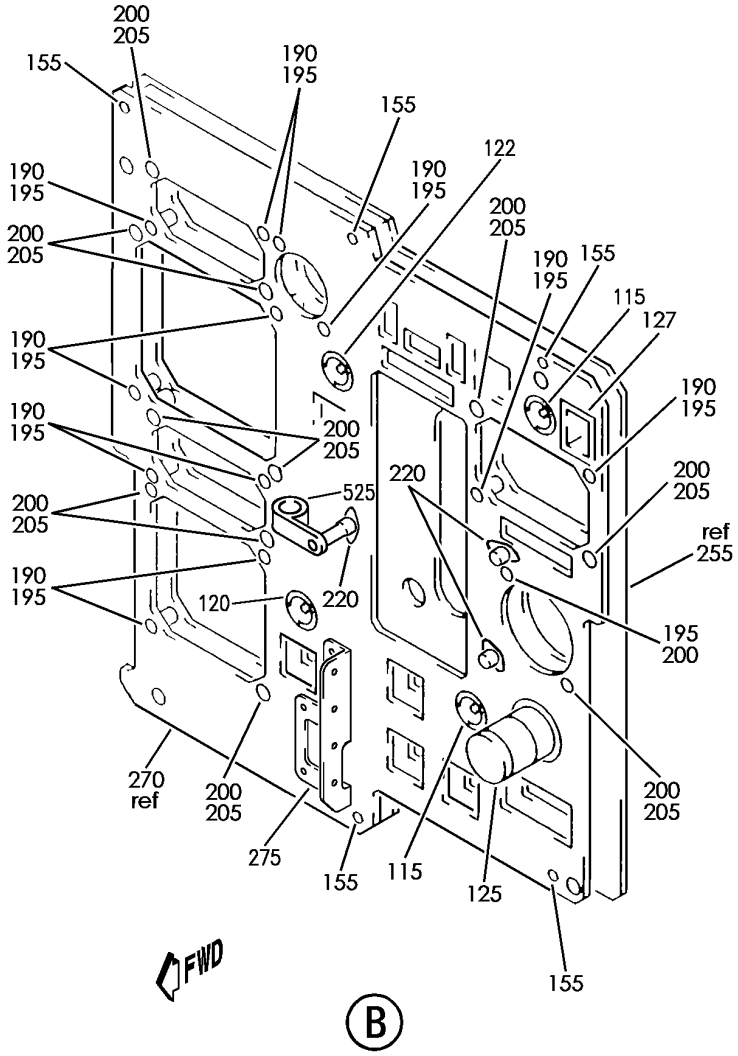

Y 31112627 SHT 3 REV 271

PANEL INSTL-FIRST OFFICERS P3-1 FWD (INDICATING AND RECORDING ONLY)
FIGURE 27 (SHEET 3)

BOEING PROPRIETARY - Copyright © - Unpublished Work - See title page for details.

FIG ITEM	PART NUMBER	1 2 3 4 5 6 7 NOMENCLATURE	EFFECT FROM TO	UNITS PER ASSY
27				
		PANEL INSTL-FIRST OFFICERS P3-1 FWD (INDICATING AND RECORDING ONLY)	121503 904949	
- 1	233N2101-1	PANEL INSTL-FIRST OFFICERS P3-1 (INDICATING AND RECORDING ONLY) POSITION DATA: FWD VARIABLE DRAWING REF: 233N2101-5003 FOR NHA/OTHER SYS DET SEE: 25-10-00-05A	121503 904949	RF
10	143D6354G2	.PANEL ASSY-THRUST MODE SELECT SUPPLIER CODE: V89954 FUNCTIONAL DESCRIPTION: ALLOWS CREW TO SELECT THRUST LIMIT COMPUTATION MODES SPECIFICATION NUMBER: S241T200-154 ELECTRICAL EQUIP NUMBER: M10258 COMPONENT MAINT MANUAL REF: 22-31-24 FOR BREAKDOWN SEE: 22-31-02-02	121503 904949	RF
15	215-016-001	.INDICATOR-FLAP POSITION SUPPLIER CODE: V26055 SPECIFICATION NUMBER: S231T280-1 ELECTRICAL EQUIP NUMBER: N00015 COMPONENT MAINT MANUAL REF: 27-50-01 FOR BREAKDOWN SEE: 27-58-00-03	121503 904949	RF

MISSING ITEM NUMBERS NOT APPLICABLE

- ITEM NOT ILLUSTRATED

BOEING PROPRIETARY - Copyright © - Unpublished Work - See title page for details.

FIG ITEM	PART NUMBER	1 2 3 4 5 6 7 NOMENCLATURE	EFFECT FROM TO	UNITS PER ASSY
27				
20	115-099-9	.INDICATOR ASSY-BRAKE PRESSURE SUPPLIER CODE: V34830 SPECIFICATION NUMBER: S231T231-9 ELECTRICAL EQUIP NUMBER: N00010 COMPONENT MAINT MANUAL REF: 29-31-01 OPTIONAL PART: 163LCP77 V35918 FOR BREAKDOWN SEE: 32-41-52-01	121503 904949	RF
20	115-099-7	.INDICATOR ASSY-BRAKE PRESSURE SUPPLIER CODE: V34830 SPECIFICATION NUMBER: S231T231-5 ELECTRICAL EQUIP NUMBER: N00010 COMPONENT MAINT MANUAL REF: 29-31-01 FOR BREAKDOWN SEE: 32-41-52-01	121503 904949	RF
20	163LCP77	.INDICATOR ASSY-BRAKE PRESSURE SUPPLIER CODE: V35918 SPECIFICATION NUMBER: S231N212-9 ELECTRICAL EQUIP NUMBER: N00010 COMPONENT MAINT MANUAL REF: 32-41-69 OPTIONAL PART: 115-099-9 V34830 FOR BREAKDOWN SEE: 32-41-52-01	121503 904949	RF

MISSING ITEM NUMBERS NOT APPLICABLE

– ITEM NOT ILLUSTRATED

BOEING PROPRIETARY - Copyright © - Unpublished Work - See title page for details.

FIG ITEM	PART NUMBER	1 2 3 4 5 6 7 NOMENCLATURE	EFFECT FROM TO	UNITS PER ASSY
27				
30	622-5374-003	.INDICATOR ASSY-AUTOLAND STATUS SUPPLIER CODE: V4V792 SPECIFICATION NUMBER: S241T120-2 ELECTRICAL EQUIP NUMBER: N00071 COMPONENT MAINT MANUAL REF: 22-14-70 FOR BREAKDOWN SEE: 22-14-01-01	121503 904949	RF
35	4039891-904	.INDICATOR-MACH AIRSPEED SUPPLIER CODE: V58960 SPECIFICATION NUMBER: S231T100-2 ELECTRICAL EQUIP NUMBER: N00041 COMPONENT MAINT MANUAL REF: 34-13-09 QUALIFIED I/W DATA: S231T100-2/4039891-904 DISPLAY HAS MORE GRADUATIONS ON DIAL FACE THAN S231T100-1/ 4039891-903 REPLACE IN SHIP SHIPSETS ONLY FOR BREAKDOWN SEE: 34-13-01-01	121503 904949	RF
40	622-5990-001	.INDICATOR-DUAL DISTANCE SUPPLIER CODE: V4V792 SPECIFICATION NUMBER: S242T403-301 ELECTRICAL EQUIP NUMBER: N10031 COMPONENT MAINT MANUAL REF: 34-22-76 FOR BREAKDOWN SEE: 34-55-03-02	121503 904949	RF

MISSING ITEM NUMBERS NOT APPLICABLE

– ITEM NOT ILLUSTRATED

BOEING PROPRIETARY - Copyright © - Unpublished Work - See title page for details.

FIG ITEM	PART NUMBER	1 2 3 4 5 6 7 NOMENCLATURE	EFFECT FROM TO	UNITS PER ASSY
27				
40	622-5990-302	.INDICATOR-DUAL DISTANCE SUPPLIER CODE: V4V792 SPECIFICATION NUMBER: S242T403-302 ELECTRICAL EQUIP NUMBER: N10031 COMPONENT MAINT MANUAL REF: 34-22-76 FOR BREAKDOWN SEE: 34-55-03-02	121503 904949	RF
45	65806-002-1	.CLOCK ASSY- SUPPLIER CODE: VF0216 SPECIFICATION NUMBER: S231T120-1 ELECTRICAL EQUIP NUMBER: N00042 COMPONENT MAINT MANUAL REF: 31-25-01 QUALIFIED I/W DATA: 2610-08-1(60B00303-107) I/W 65806-002-1(S231T120-1) IN SHIPSETS, FOR ALL FMC EXCEPT S242T102-451 WITH S/W PS4052970-95X, WHERE X CAN BE ANY VALUE, AND S242T102-455. FOR BREAKDOWN SEE: 31-25-01-01	121503 904949	RF
45	2600-06-1	.CLOCK ASSY- SUPPLIER CODE: V52013 ELECTRICAL EQUIP NUMBER: N00042 COMPONENT MAINT MANUAL REF: 31-20-01 QUALIFIED I/W DATA: 2600-06-1 I/W 2610-08-1 SUBJECT TO CUSTOMER PREFERENCE FOR BREAKDOWN SEE: 31-25-01-01	121503 904949	RF

MISSING ITEM NUMBERS NOT APPLICABLE

– ITEM NOT ILLUSTRATED

BOEING PROPRIETARY - Copyright © - Unpublished Work - See title page for details.

FIG ITEM	PART NUMBER	1 2 3 4 5 6 7 NOMENCLATURE	EFFECT FROM TO	UNITS PER ASSY
27				
50	233N2222-85	.MODULE ASSY-	121503	1
		PRE ALERT SB:	904949	
		33A0044R1		
		FOR OTHER SYS DETAILS SEE:		
		11-31-01-01		
		22-14-01-01		
		22-31-02-02		
		26-17-51-01		
		27-51-57-01		
		27-58-00-03		
		27-81-00-02		
		31-25-01-01		
		32-35-52-01		
		32-41-52-01		
		32-46-00-02		
		32-61-51-01		
		33-13-57-01		
		34-13-01-01		
		34-22-05-01		
		34-46-51-01		
		34-55-03-02		
50	233N2222-1085	.MODULE ASSY-	121503	1
		POST ALERT SB:	904949	
		33A0044R1		
		FOR OTHER SYS DETAILS SEE:		
		11-31-01-01		
		22-14-01-01		
		22-31-02-02		
		26-17-51-01		
		27-51-57-01		
		27-58-00-03		
		27-81-00-02		
		31-25-01-01		
		32-35-52-01		
		32-41-52-01		
		32-46-00-02		
		32-61-51-01		
		33-13-57-01		
		34-13-01-01		
		34-22-05-01		
		34-46-51-01		
		34-55-03-02		
60	BAC27NEL0187	..DECAL-	121503	1
		PLACARD CONTENT:	904949	
		1		
65	BAC27NEL0188	..DECAL-	121503	1
		PLACARD CONTENT:	904949	
		2		

MISSING ITEM NUMBERS NOT APPLICABLE

— ITEM NOT ILLUSTRATED

BOEING PROPRIETARY - Copyright © - Unpublished Work - See title page for details.

FIG ITEM	PART NUMBER	1 2 3 4 5 6 7 NOMENCLATURE	EFFECT FROM TO	UNITS PER ASSY
27				
70	BAC27NEL0189	..DECAL-	121503	1
		PLACARD CONTENT:	904949	
		3		
75	BAC27NEL0190	..DECAL-	121503	1
		PLACARD CONTENT:	904949	
		4		
80	BAC27NEL0191	..DECAL-	121503	1
		PLACARD CONTENT:	904949	
		5		
85	BAC27NEL0192	..DECAL-	121503	1
		PLACARD CONTENT:	904949	
		6		
90	BAC27NEL0340	..DECAL-	121503	1
		PLACARD CONTENT:	904949	
		AP0301		
95	BAC27NFDE0093	..DECAL-	121503	1
		PLACARD CONTENT:	904949	
		TB0070		
100	BAC27NFDE0094	..DECAL-	121503	1
		PLACARD CONTENT:	904949	
		TB0071		
115	233T2220-10	..CUP ASSY	121503	2
			904949	
125	233T2220-24	..CUP ASSY	121503	1
			904949	
130	233T2218-6	..FOOTREST ASSY	121503	1
			904949	
		ATTACHING PARTS		
- 135	NAS514P1032-24	..SCREW-	121503	2
			904949	
		-------*-------		
145	MS21209F1-30	...INSERT	121503	2
			904949	
150	233T2218-8	...FOOTREST	121503	1
			904949	
155	NAS514P832-8	..SCREW-	121503	5
			904949	
165	BACS21Y33R	..STUD ASSY-	121503	1
			904949	
170	BACS21Y35R	..STUD ASSY-	121503	1
			904949	
175	BACS21Y36R	..STUD ASSY-	121503	1
			904949	
180	BACS21Y37R	..STUD ASSY-	121503	1
			904949	
190	012001-101	..SPACER-CRIMP	121503	12
		SUPPLIER CODE:	904949	
		V28277		

MISSING ITEM NUMBERS NOT APPLICABLE

- ITEM NOT ILLUSTRATED

BOEING PROPRIETARY - Copyright © - Unpublished Work - See title page for details.

FIG ITEM	PART NUMBER	1 2 3 4 5 6 7 NOMENCLATURE	EFFECT FROM TO	UNITS PER ASSY
27				
200	350-1	..SPACER-	121503	12
		SUPPLIER CODE:	904949	
		V28277		
210	H21-1	..SPACER	121503	2
		SUPPLIER CODE:	904949	
		V34941		
		SPECIFICATION NUMBER:		
		BACS18AR1		
		OPTIONAL PART:		
		FAB276A		
		V15805		
		YHLZ1C2		
		V09922		
215	1127700	..WASHER	121503	4
		SUPPLIER CODE:	904949	
		V60119		
		SPECIFICATION NUMBER:		
		BACW10X4		
		OPTIONAL PART:		
		2600LW		
		V71286		
220	WS1-4A6	..NUT	121503	3
		SUPPLIER CODE:	904949	
		V04169		
		SPECIFICATION NUMBER:		
		BACN10TL3A6		
		ATTACHING PARTS		
- 225	BACR15BB4D	..RIVET-	121503	6
		SIZE DETERMINED ON INSTL.	904949	
		-------*-------		
230	BACC49A1	..CLAMP-	121503	4
		SUPPLIER CODE:	904949	
		V09922		
		SPECIFICATION NUMBER:		
		BACC49A1		
		OPTIONAL PART:		
		FAB278		
		V15805		
		H28-1		
		V34941		
		UP103		
		V6E102		
235	233N2226-90	..PANEL ASSY-	121503	1
			904949	
250	GR1003	...NUT-INSERT	121503	8
		SUPPLIER CODE:	904949	
		V0625B		

MISSING ITEM NUMBERS NOT APPLICABLE

- ITEM NOT ILLUSTRATED

BOEING PROPRIETARY - Copyright © - Unpublished Work - See title page for details.

FIG ITEM	PART NUMBER	1 2 3 4 5 6 7 NOMENCLATURE	EFFECT FROM TO	UNITS PER ASSY
27				
255	233N2226-91	...FRAME ASSY- ALTERED FROM PART NUMBER: 233N2230-1	121503 904949	1
270	233N2226-78	...BACKPLATE- ALTERED FROM PART NUMBER: 233N2242-1	121503 904949	1
- 500	286N0002-001	WIRE BUNDLE ASSY-	121503 904949	RF
510	BACC45FN14-15P6	.CONNECTOR- ELECTRICAL EQUIP NUMBER: D42174J WIRING DIAGRAM REF: 323511	121503 904949	1
515	BACC45FN22-55P8	.RECEPTACLE- ELECTRICAL EQUIP NUMBER: D40834J WIRING DIAGRAM REF: 323111	121503 904949	1
520	BACC45FN22-55P	.CONNECTOR- ELECTRICAL EQUIP NUMBER: D40836J WIRING DIAGRAM REF: 326112	121503 904949	1
- 550	286N0003-002	WIRE BUNDLE ASSY- REWORKED BY ALERT SB: 34A0222	121503 904949	RF
560	BACC45FT14A15S6	.CONNECTOR- ELECTRICAL EQUIP NUMBER: D42174P WIRING DIAGRAM REF: 323511	904949	1
560	BACC45FT14D15S6	.CONNECTOR- ELECTRICAL EQUIP NUMBER: D42174P WIRING DIAGRAM REF: 323511	121503	1
565	BACC45FT22A55S8	.CONNECTOR- ELECTRICAL EQUIP NUMBER: D40834P WIRING DIAGRAM REF: 223112	904949	1
565	BACC45FT22D55S8	.PLUG- ELECTRICAL EQUIP NUMBER: D40834P WIRING DIAGRAM REF: 223112	121503	1

MISSING ITEM NUMBERS NOT APPLICABLE

- ITEM NOT ILLUSTRATED

BOEING PROPRIETARY - Copyright © - Unpublished Work - See title page for details.

FIG ITEM	PART NUMBER	1 2 3 4 5 6 7 NOMENCLATURE	EFFECT FROM TO	UNITS PER ASSY
27				
570	BACC45FT22A55S	.CONNECTOR- ELECTRICAL EQUIP NUMBER: D40836P WIRING DIAGRAM REF: 223211	904949	1
570	BACC45FT22D55S	.CONNECTOR- ELECTRICAL EQUIP NUMBER: D40836P WIRING DIAGRAM REF: 223211	121503	1

MISSING ITEM NUMBERS NOT APPLICABLE

– ITEM NOT ILLUSTRATED

BOEING PROPRIETARY - Copyright © - Unpublished Work - See title page for details.

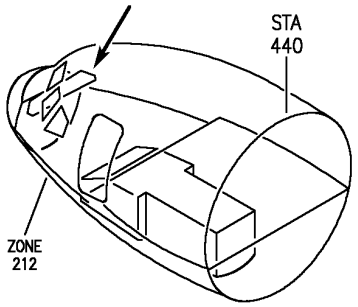

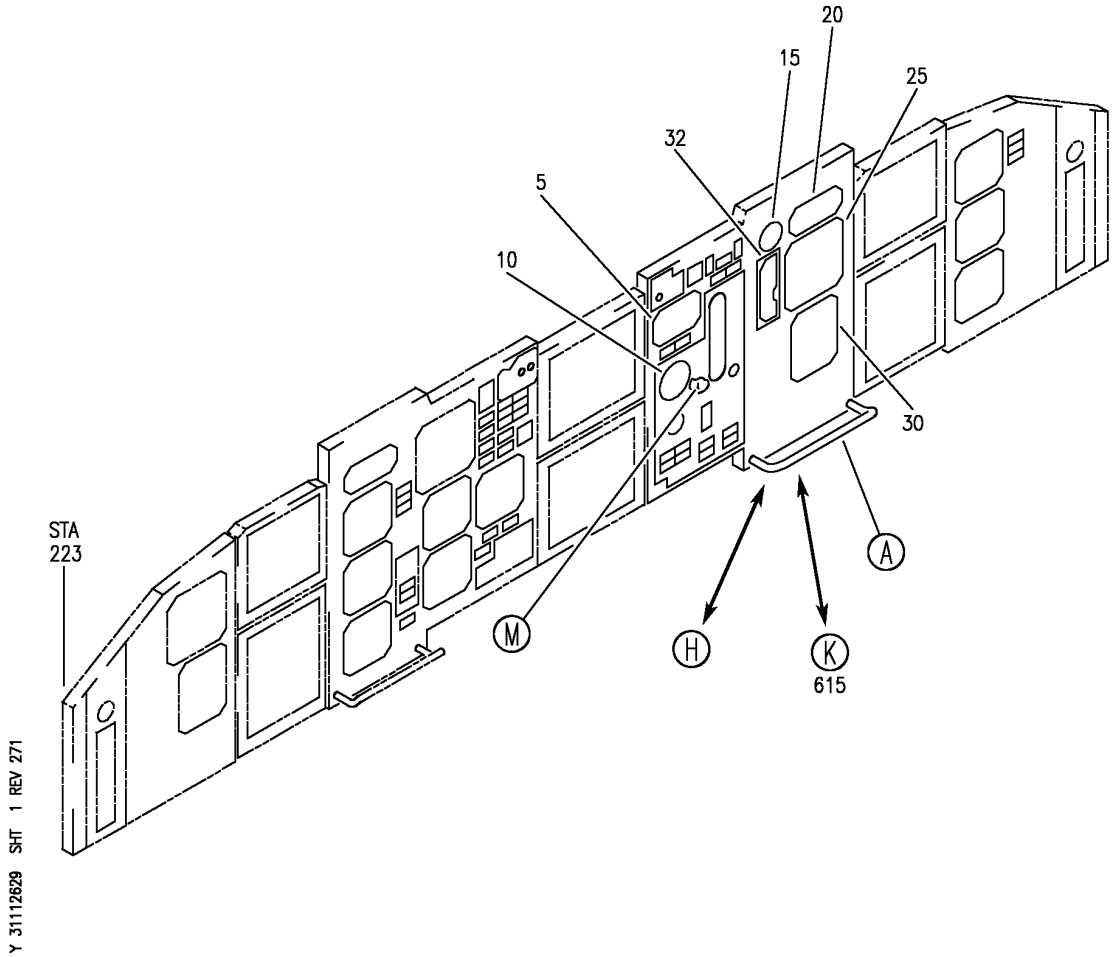

PANEL INSTL-FIRST OFFICERS P3-1 FWD (INDICATING AND RECORDING ONLY)
FIGURE 29 (SHEET 1)

BOEING PROPRIETARY - Copyright © - Unpublished Work - See title page for details.

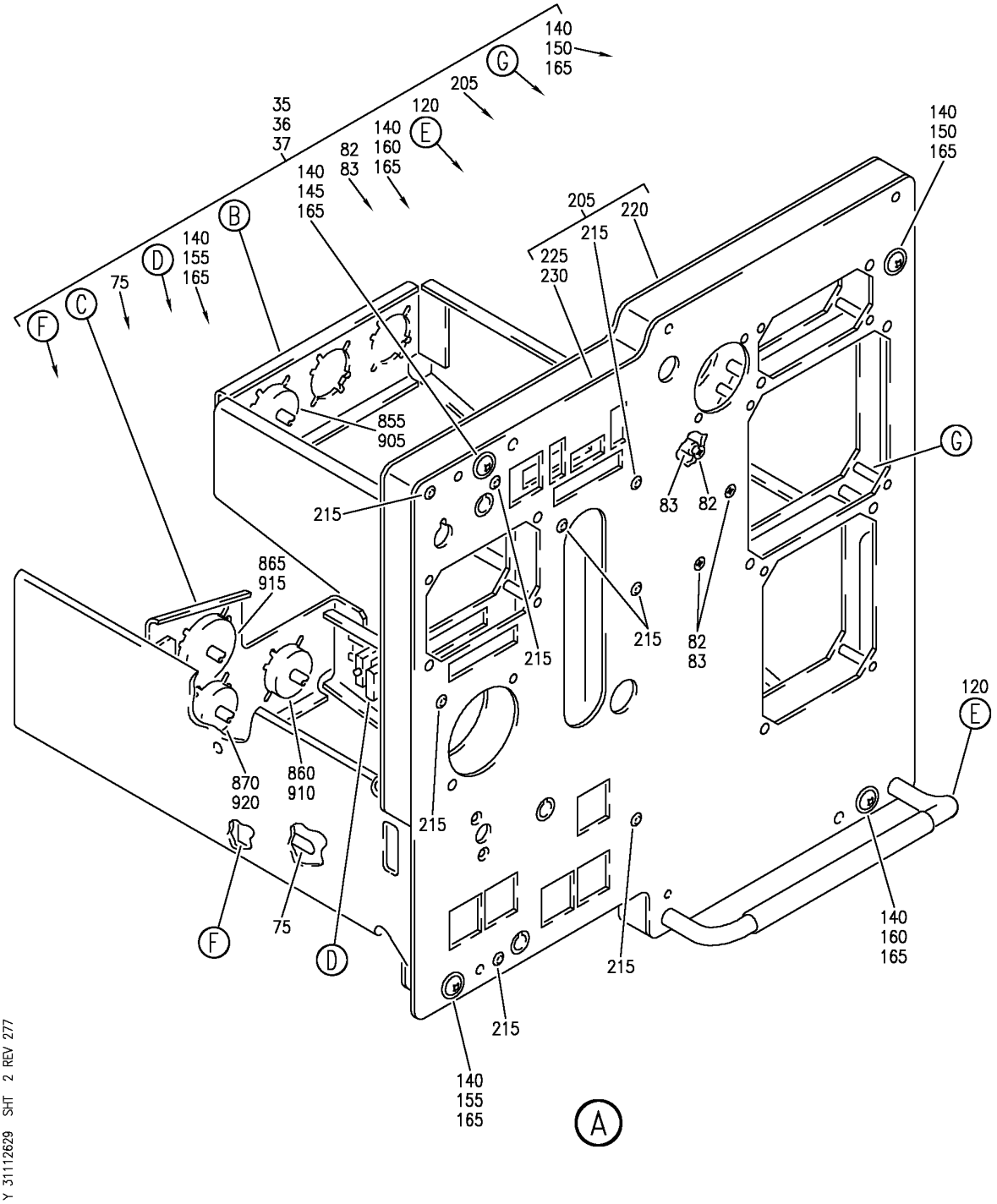

PANEL INSTL-FIRST OFFICERS P3-1 FWD (INDICATING AND RECORDING ONLY)
FIGURE 29 (SHEET 2)

BOEING PROPRIETARY - Copyright © - Unpublished Work - See title page for details.

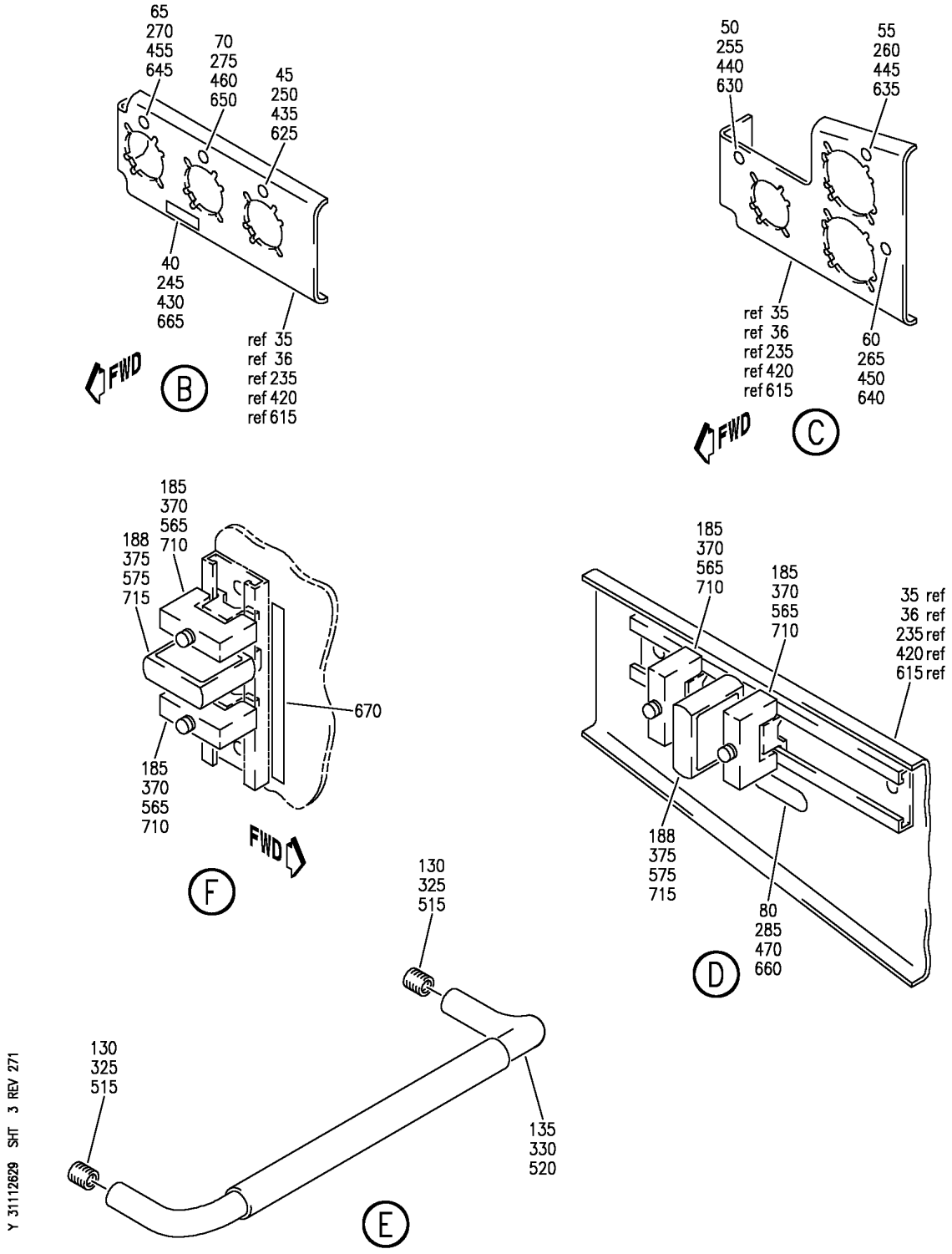

PANEL INSTL-FIRST OFFICERS P3-1 FWD (INDICATING AND RECORDING ONLY)
FIGURE 29 (SHEET 3)

BOEING PROPRIETARY - Copyright © - Unpublished Work - See title page for details.

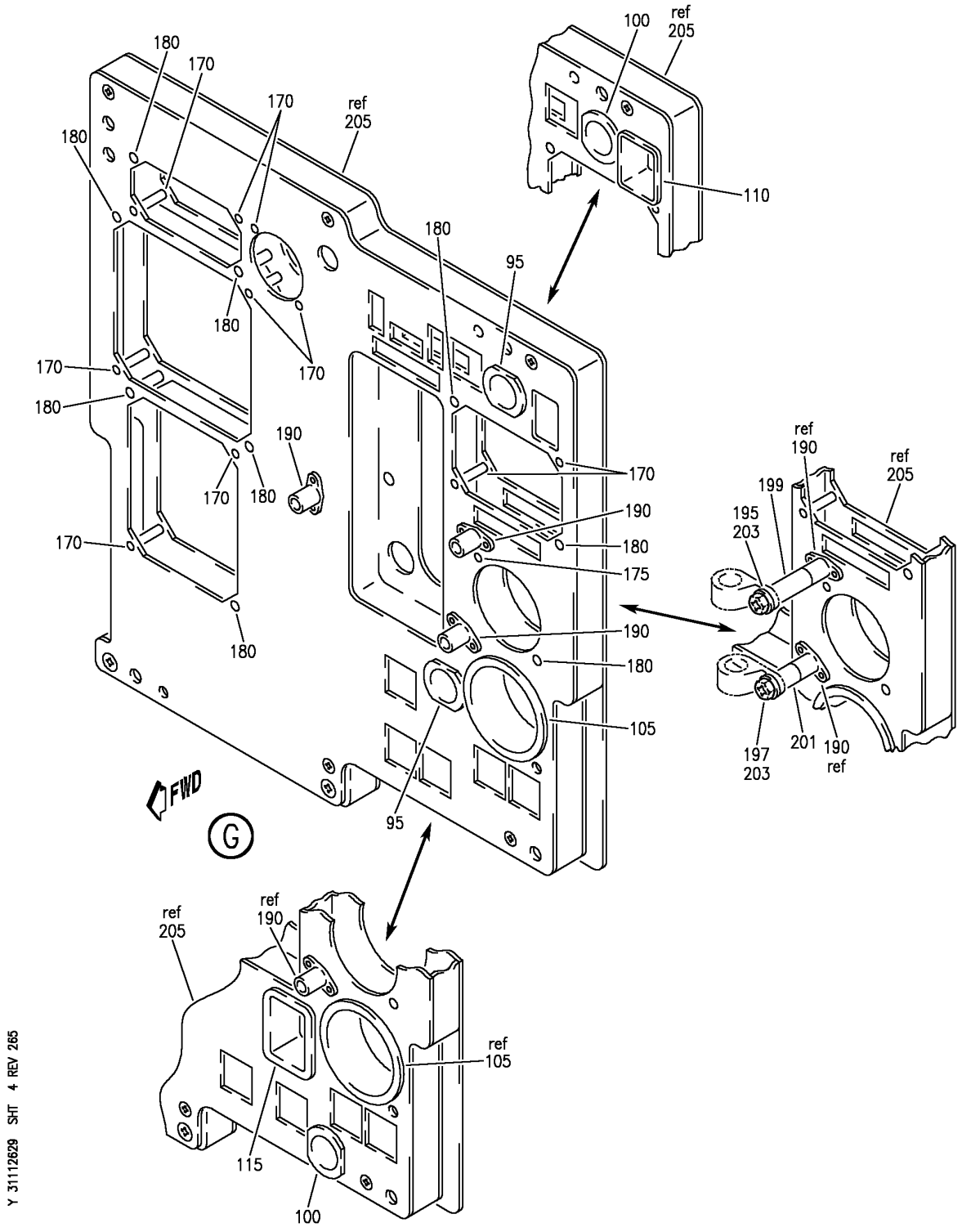

PANEL INSTL-FIRST OFFICERS P3-1 FWD (INDICATING AND RECORDING ONLY)
FIGURE 29 (SHEET 4)

BOEING PROPRIETARY - Copyright © - Unpublished Work - See title page for details.

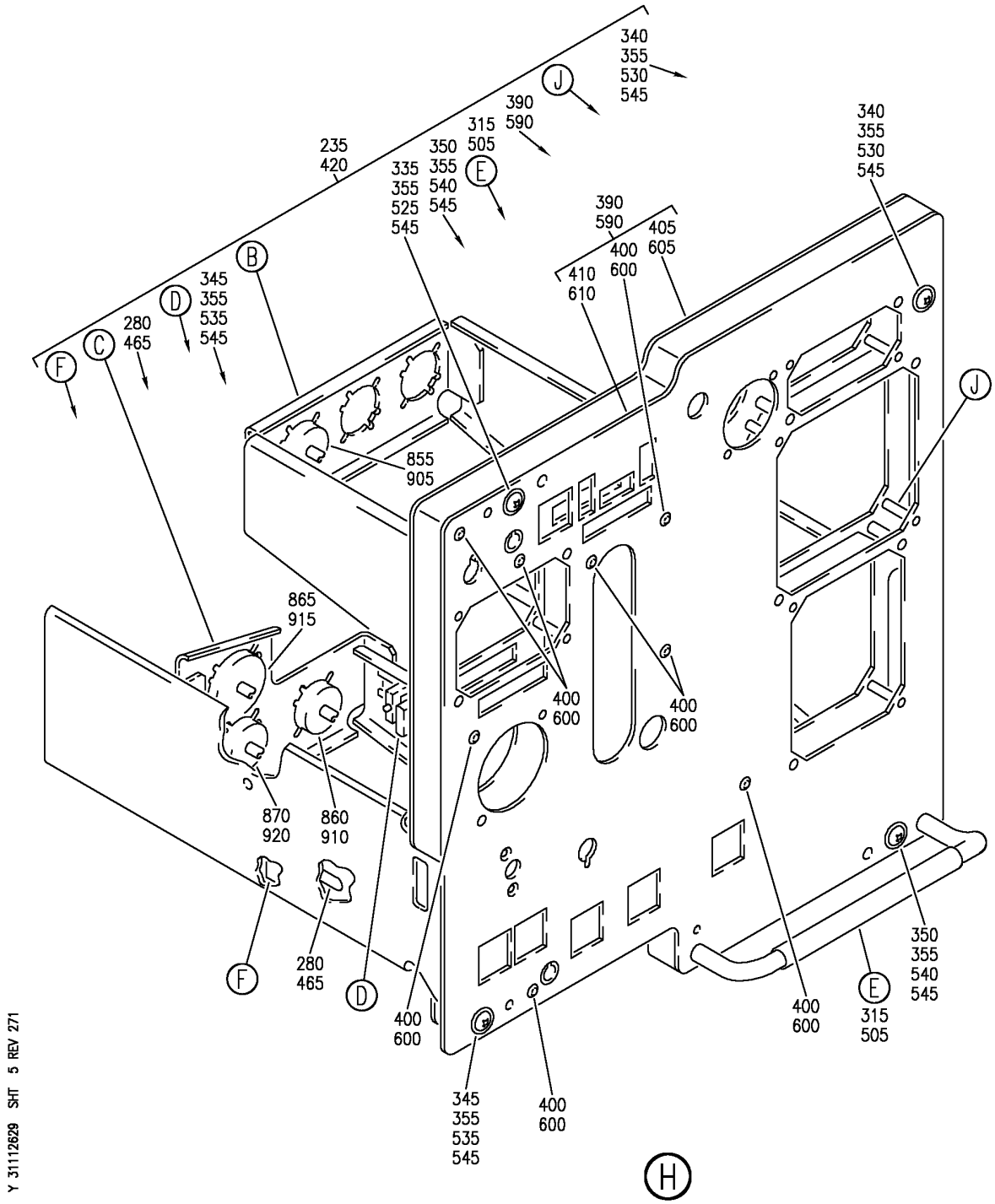

PANEL INSTL-FIRST OFFICERS P3-1 FWD (INDICATING AND RECORDING ONLY)
FIGURE 29 (SHEET 5)

BOEING PROPRIETARY - Copyright © - Unpublished Work - See title page for details.

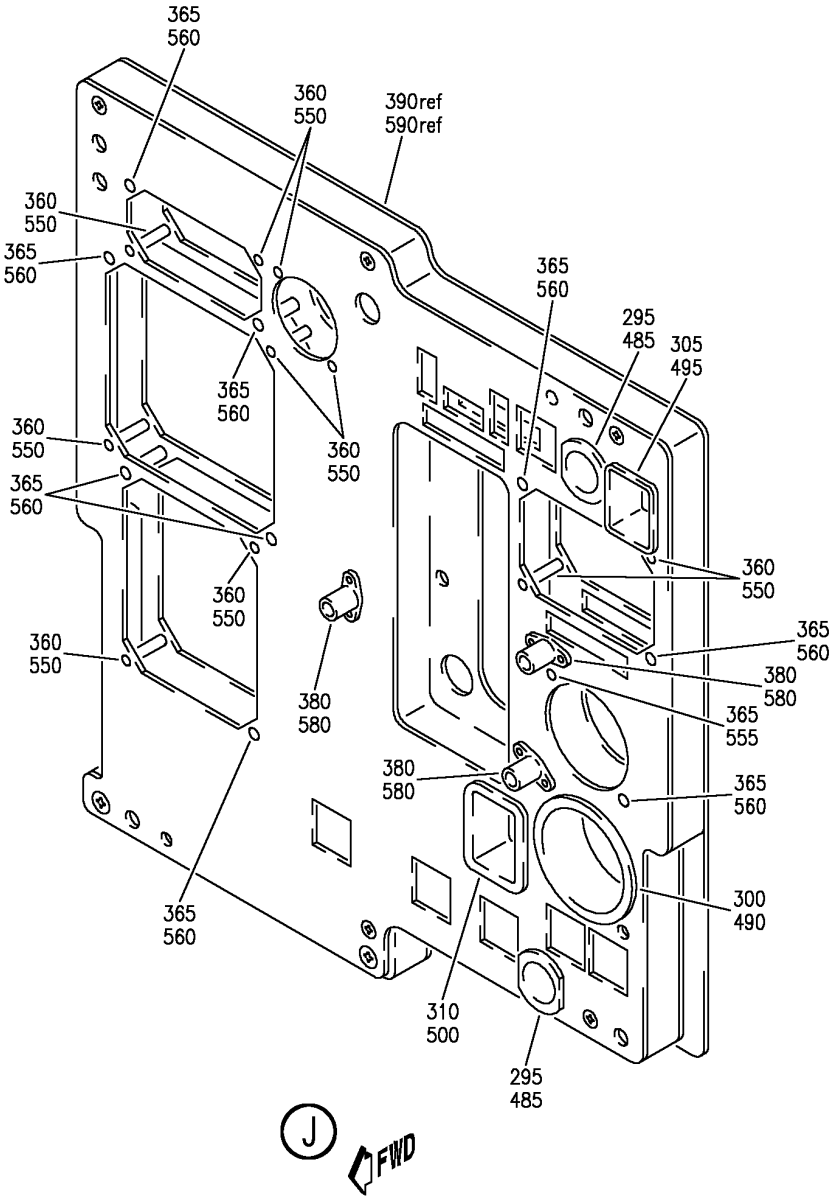

Y 31112629 SHT 6 REV 265

PANEL INSTL-FIRST OFFICERS P3-1 FWD (INDICATING AND RECORDING ONLY)
FIGURE 29 (SHEET 6)

BOEING PROPRIETARY - Copyright © - Unpublished Work - See title page for details.

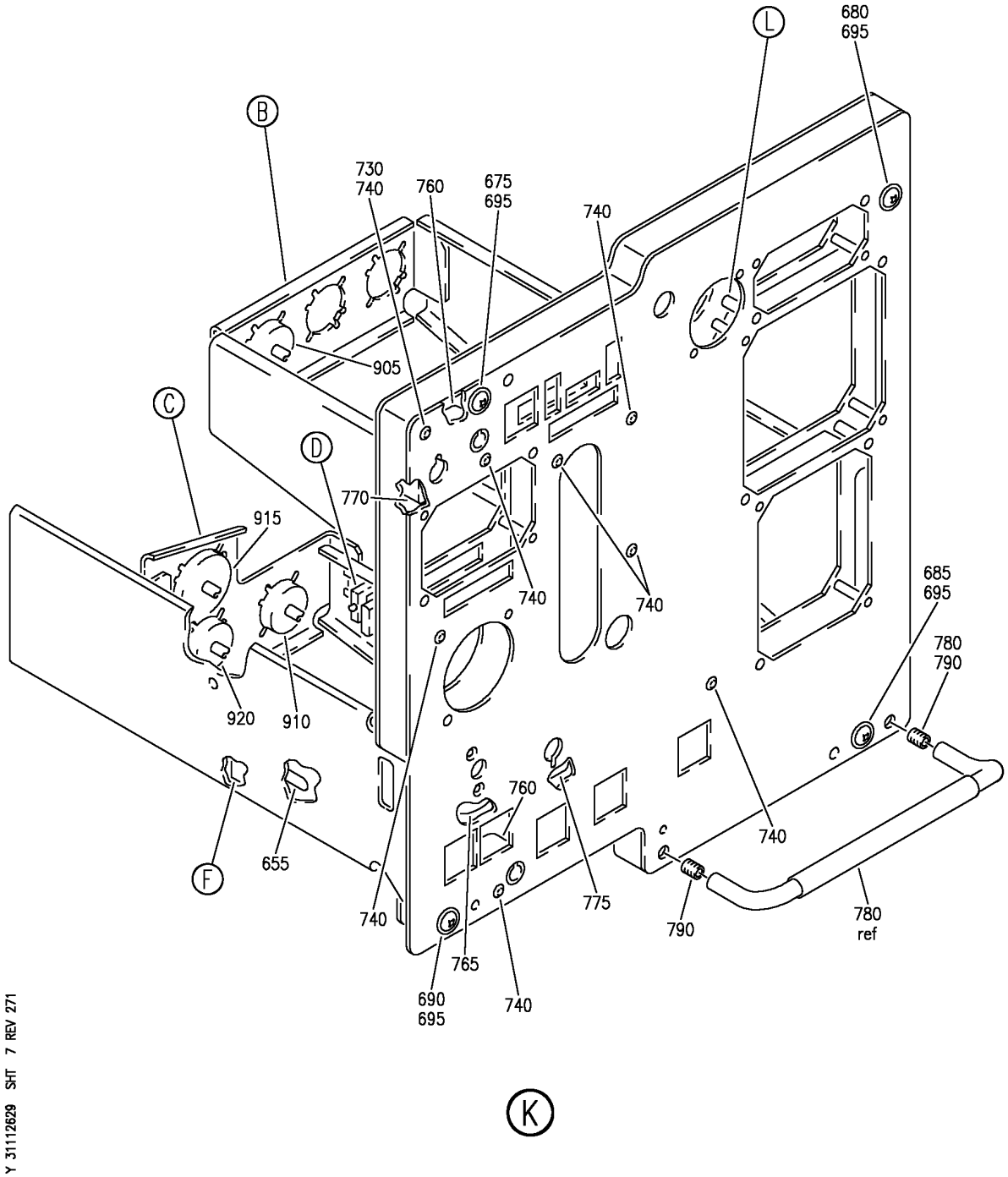

PANEL INSTL-FIRST OFFICERS P3-1 FWD (INDICATING AND RECORDING ONLY)
FIGURE 29 (SHEET 7)

BOEING PROPRIETARY - Copyright © - Unpublished Work - See title page for details.

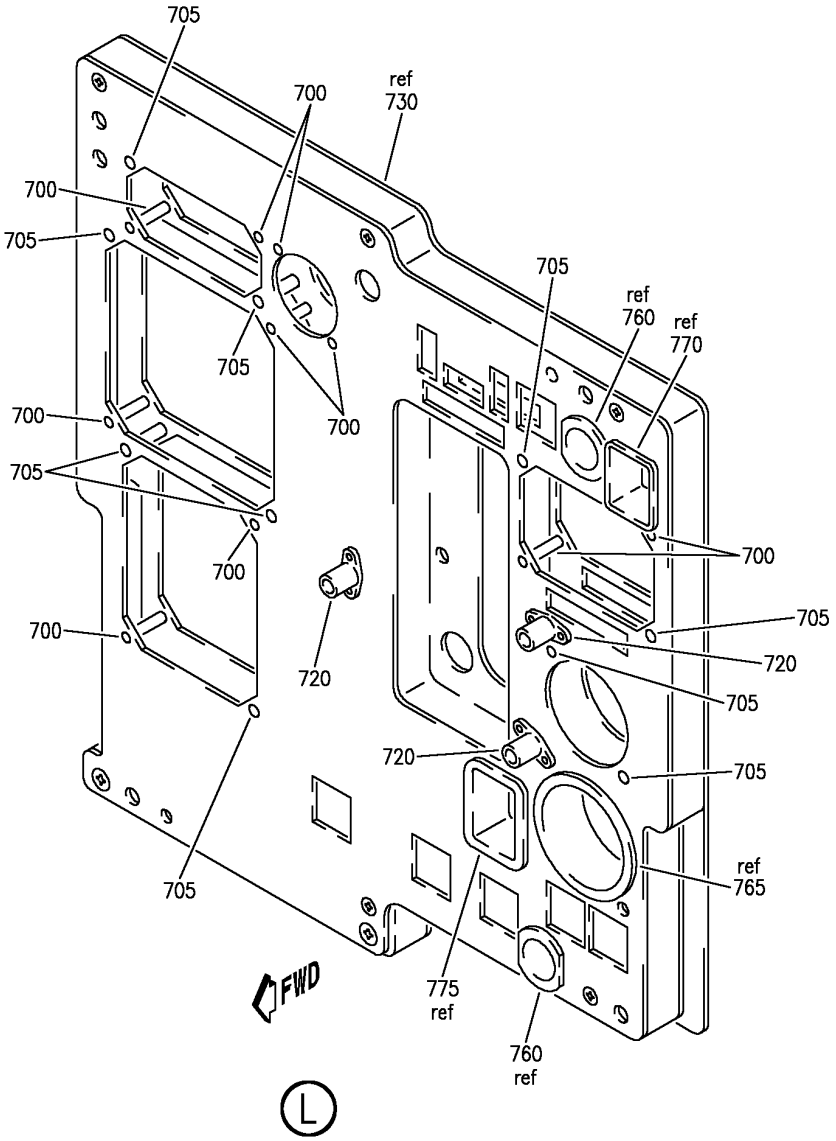

Y 31112629 SHT 8 REV 265

PANEL INSTL-FIRST OFFICERS P3-1 FWD (INDICATING AND RECORDING ONLY)
FIGURE 29 (SHEET 8)

BOEING PROPRIETARY - Copyright © - Unpublished Work - See title page for details.

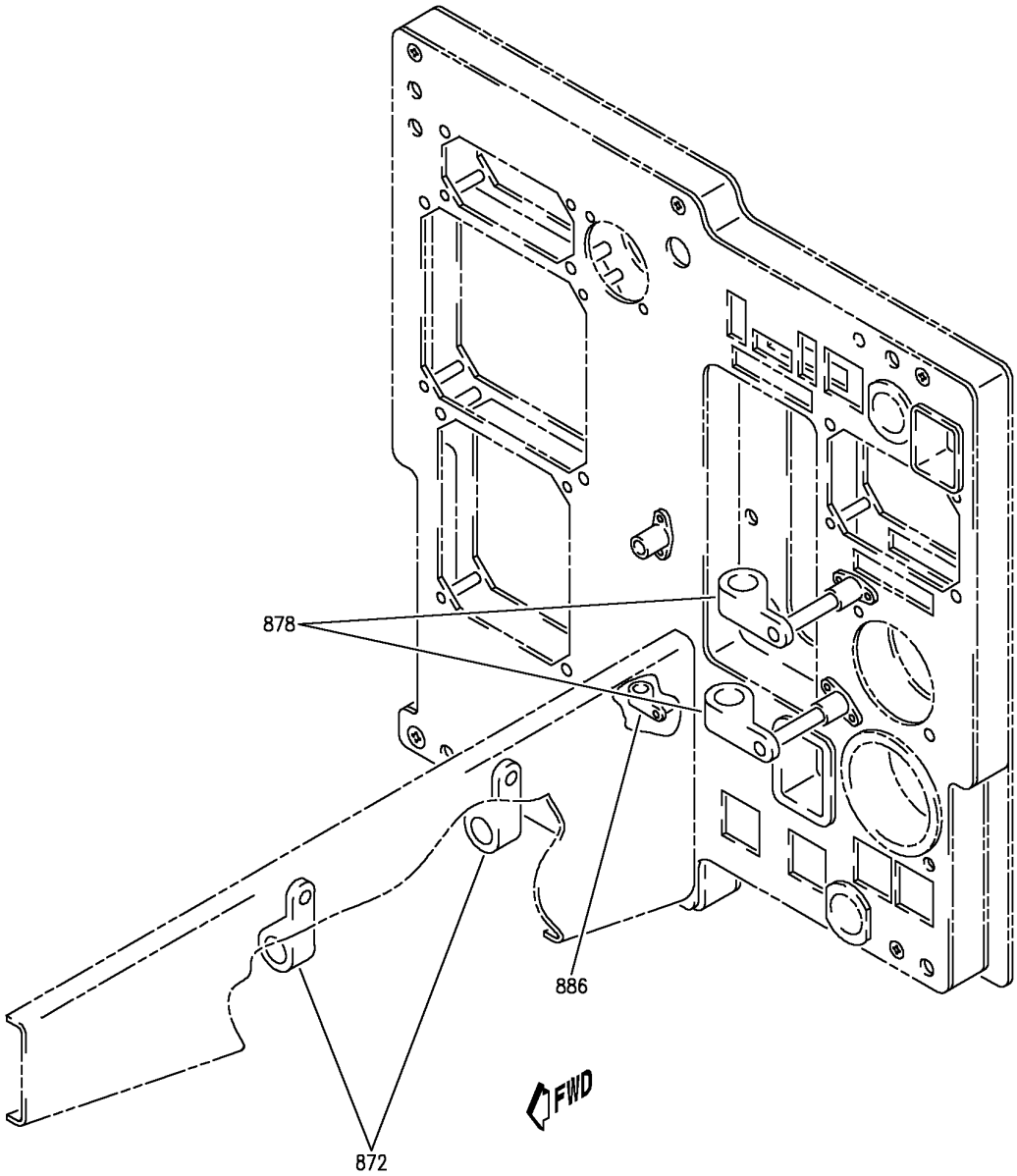

Y 31112629 SHT 9 REV 271

PANEL INSTL-FIRST OFFICERS P3-1 FWD (INDICATING AND RECORDING ONLY)
FIGURE 29 (SHEET 9)

BOEING PROPRIETARY - Copyright © - Unpublished Work - See title page for details.

FIG ITEM	PART NUMBER	1 2 3 4 5 6 7 NOMENCLATURE	EFFECT FROM TO	UNITS PER ASSY
29				
		PANEL INSTL-FIRST OFFICERS P3-1 FWD (INDICATING AND RECORDING ONLY)	002004 006010 107107 950999	
- 1	233N2101-1	PANEL INSTL-FIRST OFFICER P3-1 (INDICATING AND RECORDING ONLY) POSITION DATA: FWD VARIABLE DRAWING REF: 233N2101-5004 233N2101-5037 233N2101-5039 233N2101-5041 FOR NHA/OTHER SYS DET SEE: 25-10-00-05A	002004 006010 107107 950999	RF
5	143D6354G2	.PANEL ASSY-THRUST MODE SELECT SUPPLIER CODE: V89954 FUNCTIONAL DESCRIPTION: ALLOWS CREW TO SELECT THRUST LIMIT COMPUTATION MODES SPECIFICATION NUMBER: S241T200-154 ELECTRICAL EQUIP NUMBER: M10258 COMPONENT MAINT MANUAL REF: 22-31-24 FOR BREAKDOWN SEE: 22-31-02-02	002004 006010 107107 950999	RF
10	215-016-001	.INDICATOR-FLAP POSITION SUPPLIER CODE: V26055 SPECIFICATION NUMBER: S231T280-1 ELECTRICAL EQUIP NUMBER: N00015 COMPONENT MAINT MANUAL REF: 27-50-01 FOR BREAKDOWN SEE: 27-58-00-03	002004 006010 107107 950999	RF

MISSING ITEM NUMBERS NOT APPLICABLE

- ITEM NOT ILLUSTRATED

BOEING PROPRIETARY - Copyright © - Unpublished Work - See title page for details.

FIG ITEM	PART NUMBER	1 2 3 4 5 6 7 NOMENCLATURE	EFFECT FROM TO	UNITS PER ASSY
29				
15	115-099-7	.INDICATOR ASSY-BRAKE PRESSURE SUPPLIER CODE: V34830 SPECIFICATION NUMBER: S231T231-5 ELECTRICAL EQUIP NUMBER: N00010 COMPONENT MAINT MANUAL REF: 29-31-01 FOR BREAKDOWN SEE: 32-41-52-01	002004 006010 107107 950999	RF
15	115-099-9	.INDICATOR ASSY-BRAKE PRESSURE SUPPLIER CODE: V34830 SPECIFICATION NUMBER: S231T231-9 ELECTRICAL EQUIP NUMBER: N00010 COMPONENT MAINT MANUAL REF: 29-31-01 OPTIONAL PART: 163LCP77 V35918 FOR BREAKDOWN SEE: 32-41-52-01	002004 006010 107107 950999	RF
15	163LCP77	.INDICATOR ASSY-BRAKE PRESSURE SUPPLIER CODE: V35918 SPECIFICATION NUMBER: S231N212-9 ELECTRICAL EQUIP NUMBER: N00010 COMPONENT MAINT MANUAL REF: 32-41-69 OPTIONAL PART: 115-099-9 V34830 FOR BREAKDOWN SEE: 32-41-52-01	002004 006010 107107 950999	RF

MISSING ITEM NUMBERS NOT APPLICABLE

– ITEM NOT ILLUSTRATED

BOEING PROPRIETARY - Copyright © - Unpublished Work - See title page for details.

FIG ITEM	PART NUMBER	1 2 3 4 5 6 7 NOMENCLATURE	EFFECT FROM TO	UNITS PER ASSY
29				
20	622-5374-002	.INDICATOR ASSY-AUTOLAND STATUS SUPPLIER CODE: V4V792 SPECIFICATION NUMBER: S241T120-1 ELECTRICAL EQUIP NUMBER: N00071 COMPONENT MAINT MANUAL REF: 22-14-70 FOR BREAKDOWN SEE: 22-14-01-01	002004 006010 107107 950999	RF
25	4039891-903	.INDICATOR-MACH AIRSPEED SUPPLIER CODE: V58960 SPECIFICATION NUMBER: S231T100-1 ELECTRICAL EQUIP NUMBER: N00041 COMPONENT MAINT MANUAL REF: 34-13-09 FOR BREAKDOWN SEE: 34-13-01-01	002004 006010 107107 950999	RF
30	622-5001-109	.INDICATOR ASSY-DME/RADIO MAGNETIC SUPPLIER CODE: V4V792 SPECIFICATION NUMBER: S242T403-109 ELECTRICAL EQUIP NUMBER: N00043 COMPONENT MAINT MANUAL REF: 34-22-73 QUALIFIED I/W DATA: S242T403-107 (622-5007-107) RB S242T403-109 (622-5007-109) WITH THE INCORPORATION OF S/B 757-34-0018 AND VENDOR S/B (ROCKWELL COLLINS) RDM1 743-34-10(R1) FOR BREAKDOWN SEE: 34-22-05-01	002004 006010 107107 950999	RF

MISSING ITEM NUMBERS NOT APPLICABLE

– ITEM NOT ILLUSTRATED

BOEING PROPRIETARY - Copyright © - Unpublished Work - See title page for details.

FIG ITEM	PART NUMBER	1 2 3 4 5 6 7 NOMENCLATURE	EFFECT FROM TO	UNITS PER ASSY
29				
35	233N2222-53	.MODULE ASSY- PRE ALERT SB: 33A0044 FOR OTHER SYS DETAILS SEE: 11-31-01-01 22-14-01-01 22-31-02-02 26-17-51-01 27-51-57-01 27-58-00-03 27-81-00-02 32-35-52-01 32-41-52-01 32-61-51-01 33-13-57-01 34-13-01-01 34-22-05-01 34-46-51-01	107107	1
36	233N2222-77	.MODULE ASSY- PRE SERVICE BULLETIN: 34-0200 PRE ALERT SB: 33A0044 FOR OTHER SYS DETAILS SEE: 11-31-01-01 22-14-01-01 22-31-02-02 26-17-51-01 27-51-57-01 27-58-00-03 27-81-00-02 32-35-52-01 32-41-52-01 32-61-51-01 33-13-57-01 34-13-01-01 34-22-05-01 34-46-51-01	002004 006010 950999	1

MISSING ITEM NUMBERS NOT APPLICABLE

– ITEM NOT ILLUSTRATED

BOEING PROPRIETARY - Copyright © - Unpublished Work - See title page for details.

FIG ITEM	PART NUMBER	1 2 3 4 5 6 7 NOMENCLATURE	EFFECT FROM TO	UNITS PER ASSY
29				
36	233N2222-1077	.MODULE ASSY-	002004	1
		POST ALERT SB:	006010	
		33A0044	950951	
		FOR OTHER SYS DETAILS SEE:	953999	
		11-31-01-01		
		22-14-01-01		
		22-31-02-02		
		26-17-51-01		
		27-51-57-01		
		27-58-00-03		
		27-81-00-02		
		32-35-52-01		
		32-41-52-01		
		32-61-51-01		
		33-13-57-01		
		34-13-01-01		
		34-22-05-01		
		34-46-51-01		
37	233N2222-1053	.MODULE ASSY-	107107	1
		POST ALERT SB:		
		33A0044		
		FOR OTHER SYS DETAILS SEE:		
		11-31-01-01		
		22-14-01-01		
		22-31-02-02		
		26-17-51-01		
		27-51-57-01		
		27-58-00-03		
		27-81-00-02		
		32-35-52-01		
		32-41-52-01		
		32-61-51-01		
		33-13-57-01		
		34-13-01-01		
		34-22-05-01		
		34-46-51-01		
40	BAC27NEL0340	..DECAL-	002004	1
		PLACARD CONTENT:	006010	
		AP0301	107107	
			950999	
45	BAC27NEL0187	..DECAL-	002004	1
		PLACARD CONTENT:	006010	
		1	107107	
			950999	
50	BAC27NEL0188	..DECAL-	002004	1
		PLACARD CONTENT:	006010	
		2	107107	
			950999	

MISSING ITEM NUMBERS NOT APPLICABLE

— ITEM NOT ILLUSTRATED

BOEING PROPRIETARY - Copyright © - Unpublished Work - See title page for details.

FIG ITEM	PART NUMBER	1 2 3 4 5 6 7 NOMENCLATURE	EFFECT FROM TO	UNITS PER ASSY
29				
55	BAC27NEL0189	..DECAL- PLACARD CONTENT: 3	002004 006010 107107 950999	1
60	BAC27NEL0190	..DECAL- PLACARD CONTENT: 4	002004 006010 107107 950999	1
65	BAC27NEL0191	..DECAL- PLACARD CONTENT: 5	002004 006010 107107 950999	1
70	BAC27NEL0192	..DECAL- PLACARD CONTENT: 6	002004 006010 107107 950999	1
75	BAC27NFDE0093	..DECAL- PLACARD CONTENT: TB0070	002004 006010 107107 950999	1
80	BAC27NFDE0094	..DECAL- PLACARD CONTENT: TB0071	002004 006010 107107 950999	1
95	233T2220-10	..CUP ASSY	107107	2
100	233T2220-10	..CUP ASSY	002004 006010 950999	2
105	233T2220-24	..CUP ASSY	002004 006010 107107 950999	1
110	233T2220-30	..CUP ASSY	002004 006010 950999	1
115	233T2220-19	..CUP ASSY	002004 006010 950999	1
120	233T2218-6	..FOOTREST ASSY	002004 006010 107107 950999	1
		ATTACHING PARTS		
- 125	NAS514P1032-24	..SCREW	002004 006010 107107 950999	2
		-------*-------		

MISSING ITEM NUMBERS NOT APPLICABLE

- ITEM NOT ILLUSTRATED

BOEING PROPRIETARY - Copyright © - Unpublished Work - See title page for details.

FIG ITEM	PART NUMBER	1 2 3 4 5 6 7 NOMENCLATURE	EFFECT FROM TO	UNITS PER ASSY
29				
130	MS21209F1-30	...INSERT	002004 006010 107107 950999	2
135	233T2218-8	...FOOTREST	002004 006010 107107 950999	1
145	BACS21Y37R	..STUD ASSY	002004 006010 107107 950999	1
150	BACS21Y35R	..STUD ASSY	002004 006010 107107 950999	1
155	BACS21Y36R	..STUD ASSY	002004 006010 107107 950999	1
160	BACS21Y33R	..STUD ASSY	002004 006010 107107 950999	1
165	1127700	..WASHER SUPPLIER CODE: V60119 SPECIFICATION NUMBER: BACW10X4 OPTIONAL PART: 2600LW V71286	002004 006010 107107 950999	4
170	012001-101	..SPACER-CRIMP SUPPLIER CODE: V28277	002004 006010 107107 950999	10
175	012001-101	..SPACER-CRIMP SUPPLIER CODE: V28277	107107	1
175	350-1	..SPACER- SUPPLIER CODE: V28277	002004 006010 950999	1
180	350-1	..SPACER- SUPPLIER CODE: V28277	002004 006010 107107 950999	9

MISSING ITEM NUMBERS NOT APPLICABLE

– ITEM NOT ILLUSTRATED

BOEING PROPRIETARY - Copyright © - Unpublished Work - See title page for details.

FIG ITEM	PART NUMBER	1 2 3 4 5 6 7 NOMENCLATURE	EFFECT FROM TO	UNITS PER ASSY
29				
185	BACC49A1	..CLAMP SUPPLIER CODE: V09922 SPECIFICATION NUMBER: BACC49A1 OPTIONAL PART: FAB278 V15805 H28-1 V34941 UP103 V6E102	002004 006010 107107 950999	4
188	H21-1	..SPACER SUPPLIER CODE: V34941 SPECIFICATION NUMBER: BACS18AR1 OPTIONAL PART: FAB276A V15805 YHLZ1C2 V09922	002004 006010 107107 950999	2
190	WS1-4A6	..NUT-PLATE SUPPLIER CODE: V04169 SPECIFICATION NUMBER: BACN10TL3A6 ATTACHING PARTS	002004 006010 107107 950999	3
- 193	BACR15BB4D	..RIVET	002004 006010 107107 950999	6
		-------*-------		
205	233N2226-67	..PANEL ASSY- POSITION DATA: FWD	107107	1
205	233N2226-94	..PANEL ASSY- POSITION DATA: FWD ATTACHING PARTS	002004 006010 950999	1
- 210	NAS514P832-8	..SCREW-	002004 006010 107107 950999	5
		-------*-------		
215	GR1003	...NUT-INSERT SUPPLIER CODE: V0625B	002004 006010 107107 950999	8

MISSING ITEM NUMBERS NOT APPLICABLE

- ITEM NOT ILLUSTRATED

BOEING PROPRIETARY - Copyright © - Unpublished Work - See title page for details.

FIG ITEM	PART NUMBER	1 2 3 4 5 6 7 NOMENCLATURE	EFFECT FROM TO	UNITS PER ASSY
29				
220	233N2226-79	...BACKPLATE-	107107	1
		ALTERED FROM PART NUMBER:		
		233N2242-1		
220	233N2226-80	...BACKPLATE-	002004	1
		ALTERED FROM PART NUMBER:	006010	
		233N2242-1	950999	
225	233N2226-68	...FRAME ASSY-	107107	1
		ALTERED FROM PART NUMBER:		
		233N2230-1		
230	233N2226-95	...FRAME-	002004	1
		ALTERED FROM PART NUMBER:	006010	
		233N2230-1	950999	
235	233N2222-329	.MODULE ASSY-	952952	1
		COMPONENT MAINT MANUAL REF:		
		31-11-49		
		POST SERVICE BULLETIN:		
		34-0200		
		PRE ALERT SB:		
		33A0044		
		FOR OTHER SYS DETAILS SEE:		
		11-31-01-01		
		22-14-01-01		
		22-31-02-02		
		26-17-51-01		
		27-51-57-01		
		27-58-00-03		
		27-81-00-02		
		32-35-52-01		
		32-41-52-01		
		32-61-51-01		
		33-13-57-01		
		34-13-01-01		
		34-22-05-01		
		34-46-51-01		

MISSING ITEM NUMBERS NOT APPLICABLE

– ITEM NOT ILLUSTRATED

BOEING PROPRIETARY - Copyright © - Unpublished Work - See title page for details.

FIG ITEM	PART NUMBER	1 2 3 4 5 6 7 NOMENCLATURE	EFFECT FROM TO	UNITS PER ASSY
29				
235	233N2222-1329	.MODULE ASSY- COMPONENT MAINT MANUAL REF: 31-11-49 POST ALERT SB: 33A0044 FOR OTHER SYS DETAILS SEE: 11-31-01-01 22-14-01-01 22-31-02-02 26-17-51-01 27-51-57-01 27-58-00-03 27-81-00-02 32-35-52-01 32-41-52-01 32-61-51-01 33-13-57-01 34-13-01-01 34-22-05-01 34-46-51-01	952952	1
- 240	233N2222-111	..MODULE ASSY- PRE ALERT SB: 33A0044	952952	RF
- 240	233N2222-1111	..MODULE ASSY- POST ALERT SB: 33A0044	952952	RF
245	BAC27NEL0340	...DECAL- PLACARD CONTENT: AP0301	952952	1
250	BAC27NEL0187	...DECAL- PLACARD CONTENT: 1	952952	1
255	BAC27NEL0188	...DECAL- PLACARD CONTENT: 2	952952	1
260	BAC27NEL0189	...DECAL- PLACARD CONTENT: 3	952952	1
265	BAC27NEL0190	...DECAL- PLACARD CONTENT: 4	952952	1
270	BAC27NEL0191	...DECAL- PLACARD CONTENT: 5	952952	1
275	BAC27NEL0192	...DECAL- PLACARD CONTENT: 6	952952	1

MISSING ITEM NUMBERS NOT APPLICABLE

- ITEM NOT ILLUSTRATED

BOEING PROPRIETARY - Copyright © - Unpublished Work - See title page for details.

FIG ITEM	PART NUMBER	1 2 3 4 5 6 7 NOMENCLATURE	EFFECT FROM TO	UNITS PER ASSY
29				
280	BAC27NFDE0093	...DECAL-	952952	1
		PLACARD CONTENT:		
		TB0070		
285	BAC27NFDE0094	...DECAL-	952952	1
		PLACARD CONTENT:		
		TB0071		
295	233T2220-10	...CUP ASSY	952952	2
300	233T2220-24	...CUP ASSY	952952	1
305	233T2220-30	...CUP ASSY	952952	1
310	233T2220-19	...CUP ASSY	952952	1
315	233T2218-6	...FOOTREST ASSY	952952	1
		ATTACHING PARTS		
- 320	MS24693C280	...SCREW	952952	2
		-------*-------		
325	MS21209F1-30	....INSERT	952952	2
330	233T2218-8	....FOOTREST	952952	1
335	BACS21EE37R	...STUD ASSY	952952	1
340	BACS21EE35R	...STUD ASSY	952952	1
345	BACS21EE36R	...STUD ASSY	952952	1
350	BACS21EE33R	...STUD ASSY	952952	1
355	1127700	...WASHER	952952	4
		SUPPLIER CODE:		
		V60119		
		SPECIFICATION NUMBER:		
		BACW10X4		
		OPTIONAL PART:		
		2600LW		
		V71286		
360	012001-101	...SPACER-CRIMP	952952	10
		SUPPLIER CODE:		
		V28277		
365	350-1	...SPACER-	952952	10
		SUPPLIER CODE:		
		V28277		
370	BACC49A1	...CLAMP	952952	4
		SUPPLIER CODE:		
		V09922		
		SPECIFICATION NUMBER:		
		BACC49A1		
		OPTIONAL PART:		
		FAB278		
		V15805		
		H28-1		
		V34941		
		UP103		
		V6E102		

MISSING ITEM NUMBERS NOT APPLICABLE

- ITEM NOT ILLUSTRATED

BOEING PROPRIETARY - Copyright © - Unpublished Work - See title page for details.

FIG ITEM	PART NUMBER	1 2 3 4 5 6 7 NOMENCLATURE	EFFECT FROM TO	UNITS PER ASSY
29				
375	H21-1	...SPACER SUPPLIER CODE: V34941 SPECIFICATION NUMBER: BACS18AR1 OPTIONAL PART: FAB276A V15805 YHLZ1C2 V09922	952952	2
380	WS1-4A6	...NUT-PLATE SUPPLIER CODE: V04169 SPECIFICATION NUMBER: BACN10TL3A6 ATTACHING PARTS	952952	3
- 385	BACR15BB4D	...RIVET -------*-------	952952	6
390	233N2226-159	...PANEL ASSY- POSITION DATA: FWD ATTACHING PARTS	952952	1
- 395	MS24693C50	...SCREW -------*-------	952952	5
400	GR1003	....NUT-INSERT SUPPLIER CODE: V0625B SERVICE BULLETIN OPT DATA: NAS1330A06K106	952952	8
400	NAS1330A06K106	....NUT-INSERT SERVICE BULLETIN OPT DATA: GR1003 V0625B	952952	8
405	233N2226-130	....BACKPLATE- ALTERED FROM PART NUMBER: 233N2242-1	952952	1
410	233N2226-160	....FRAME- ALTERED FROM PART NUMBER: 233N2242-1	952952	1
- 850	286N0002-001	WIRE BUNDLE ASSY- REWORKED BY SB: 34-0200	002004 006010 107107 950999	RF
860	BACC45FN14-15P6	.CONNECTOR- ELECTRICAL EQUIP NUMBER: D42174J WIRING DIAGRAM REF: 323511	002004 006010 107107 950999	1

MISSING ITEM NUMBERS NOT APPLICABLE

- ITEM NOT ILLUSTRATED

BOEING PROPRIETARY - Copyright © - Unpublished Work - See title page for details.

FIG ITEM	PART NUMBER	1 2 3 4 5 6 7 NOMENCLATURE	EFFECT FROM TO	UNITS PER ASSY
29				
865	BACC45FN22-55P8	.RECEPTACLE-	002004	1
		ELECTRICAL EQUIP NUMBER:	006010	
		D40834J	107107	
		WIRING DIAGRAM REF:	950999	
		323111		
870	BACC45FN22-55P	.CONNECTOR-	002004	1
		ELECTRICAL EQUIP NUMBER:	006010	
		D40836J	107107	
		WIRING DIAGRAM REF:	950999	
		326112		
886	BACC10DK3	.CLAMP-	952952	1
		POST SERVICE BULLETIN:		
		34-0200		
		ATTACHING PARTS		
- 888	NAS1801-3-8	.SCREW	952952	1
- 890	NAS43DD3-8FC	.SPACER	952952	1
- 892	NAS1149D0316J	.WASHER	952952	1
		-------*-------		
- 900	286N0003-003	WIRE BUNDLE ASSY-	107107	RF
		REWORKED BY ALERT SB:		
		34A0222		
- 900	286N0003-005	WIRE BUNDLE ASSY-	002004	RF
		REWORKED BY ALERT SB:	006010	
		34A0222	950999	
910	BACC45FT14A15S6	.CONNECTOR-	107107	1
		ELECTRICAL EQUIP NUMBER:		
		D42174P		
		WIRING DIAGRAM REF:		
		323511		
910	BACC45FT14D15S6	.CONNECTOR-	002004	1
		ELECTRICAL EQUIP NUMBER:	006010	
		D42174P	950999	
		WIRING DIAGRAM REF:		
		323511		
915	BACC45FT22A55S8	.CONNECTOR-	107107	1
		ELECTRICAL EQUIP NUMBER:		
		D40834P		
		WIRING DIAGRAM REF:		
		223112		
915	BACC45FT22D55S8	.PLUG-	002004	1
		ELECTRICAL EQUIP NUMBER:	006010	
		D40834P	950999	
		WIRING DIAGRAM REF:		
		223112		
920	BACC45FT22A55S	.CONNECTOR-	107107	1
		ELECTRICAL EQUIP NUMBER:		
		D40836P		
		WIRING DIAGRAM REF:		
		223211		

MISSING ITEM NUMBERS NOT APPLICABLE

- ITEM NOT ILLUSTRATED

BOEING PROPRIETARY - Copyright © - Unpublished Work - See title page for details.

FIG ITEM	PART NUMBER	1 2 3 4 5 6 7 NOMENCLATURE	EFFECT FROM TO	UNITS PER ASSY
29 920	BACC45FT22D55S	.CONNECTOR- POSITION DATA: POSITION 04 ELECTRICAL EQUIP NUMBER: D40836P WIRING DIAGRAM REF: 223211	002004 006010 950999	1

MISSING ITEM NUMBERS NOT APPLICABLE

– ITEM NOT ILLUSTRATED

BOEING PROPRIETARY - Copyright © - Unpublished Work - See title page for details.

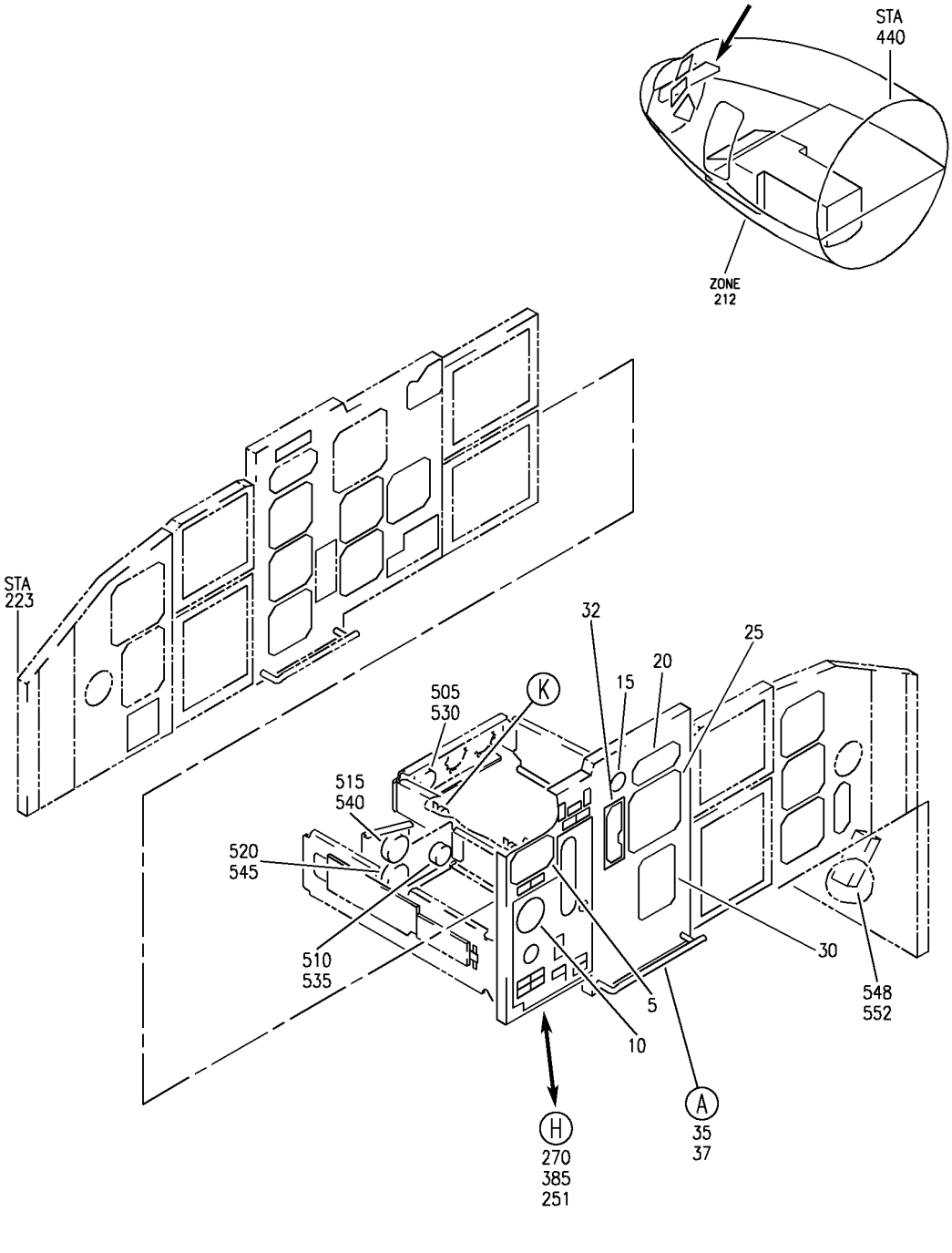

PANEL INSTL-P3-1 (FIRST OFFICER'S INSTRUMENT PANEL ONLY)
FIGURE 30 (SHEET 1)

BOEING PROPRIETARY - Copyright © - Unpublished Work - See title page for details.

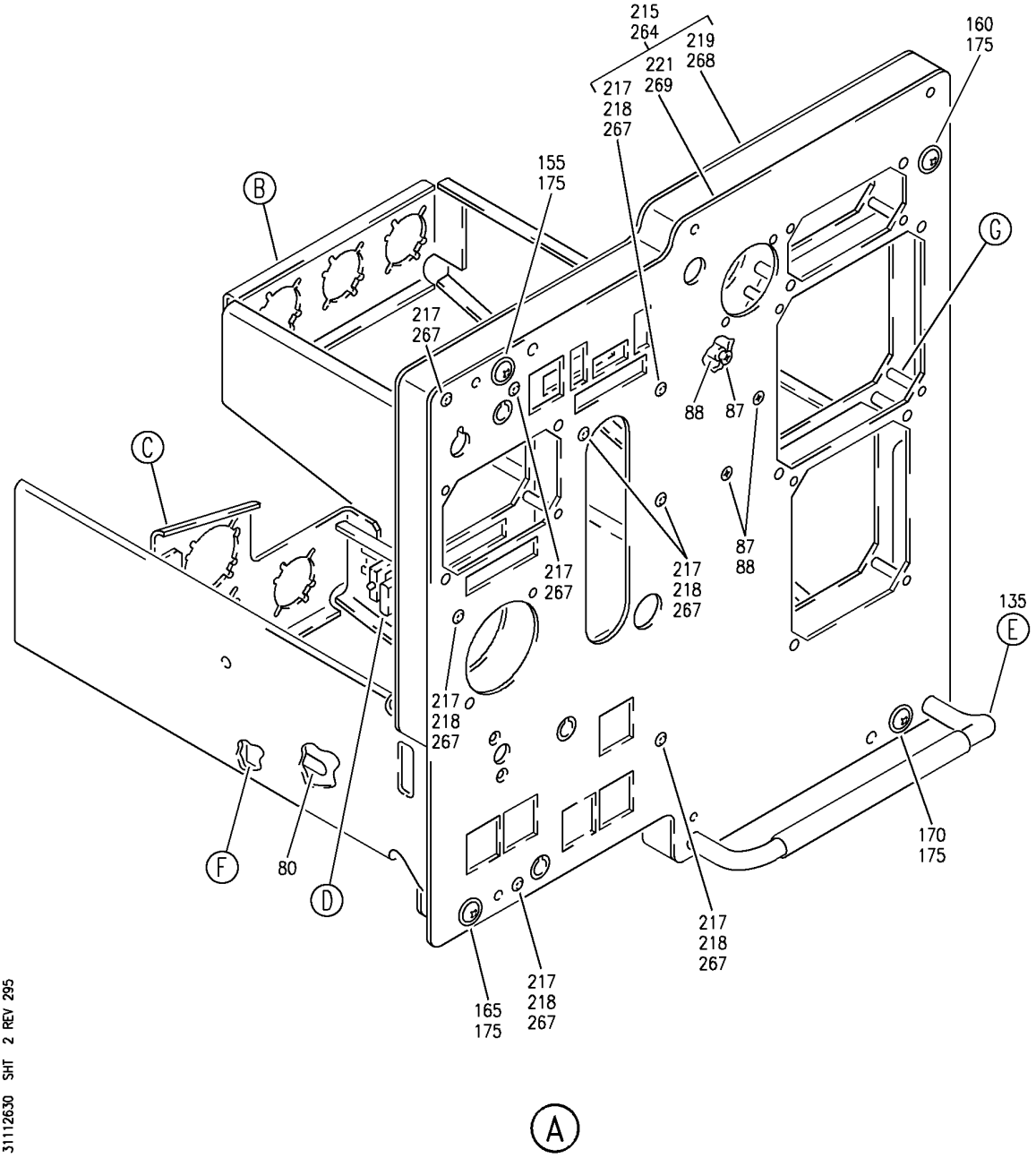

PANEL INSTL-P3-1 (FIRST OFFICER'S INSTRUMENT PANEL ONLY)
FIGURE 30 (SHEET 2)

BOEING PROPRIETARY - Copyright © - Unpublished Work - See title page for details.

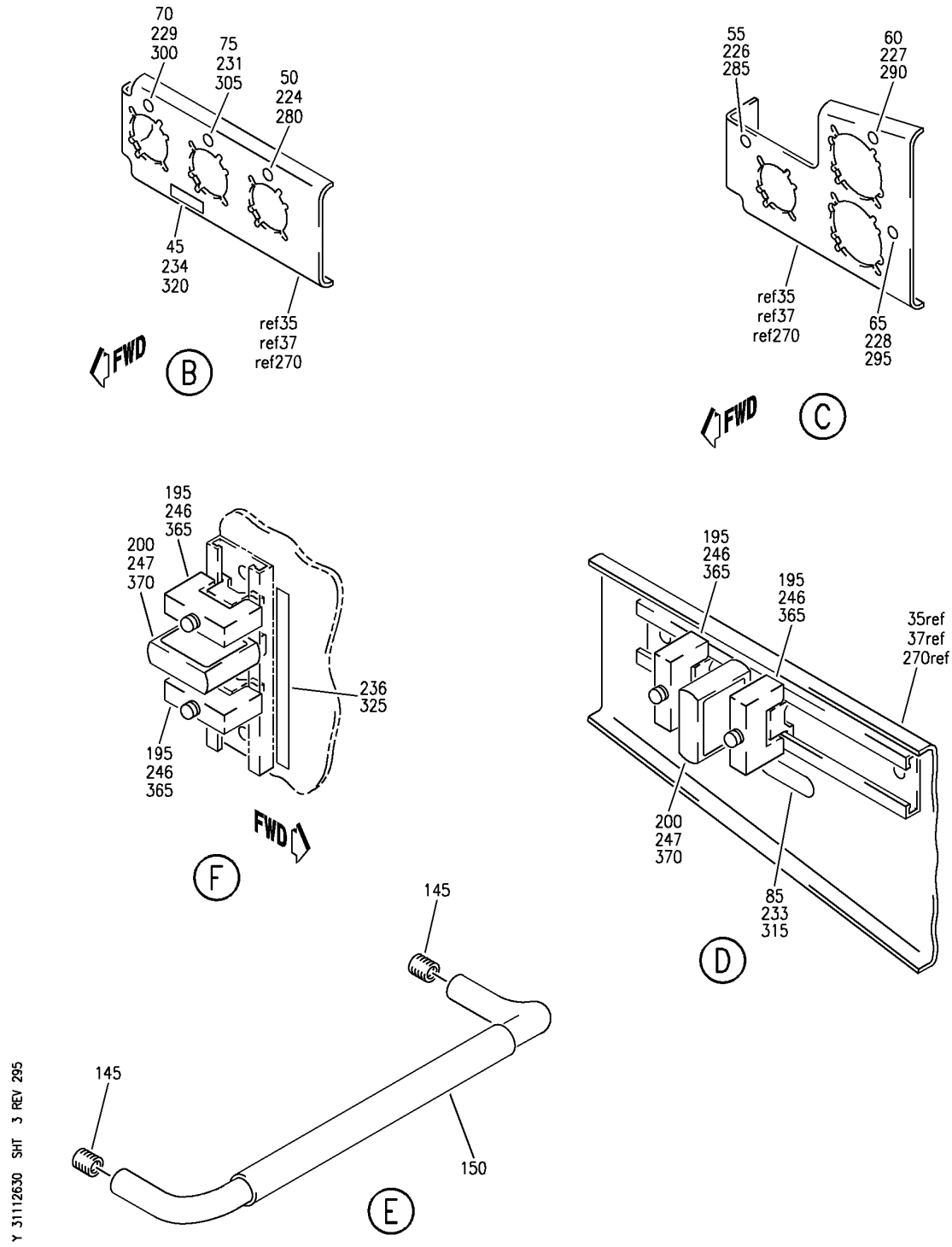

PANEL INSTL-P3-1 (FIRST OFFICER'S INSTRUMENT PANEL ONLY)
FIGURE 30 (SHEET 3)

BOEING PROPRIETARY - Copyright © - Unpublished Work - See title page for details.

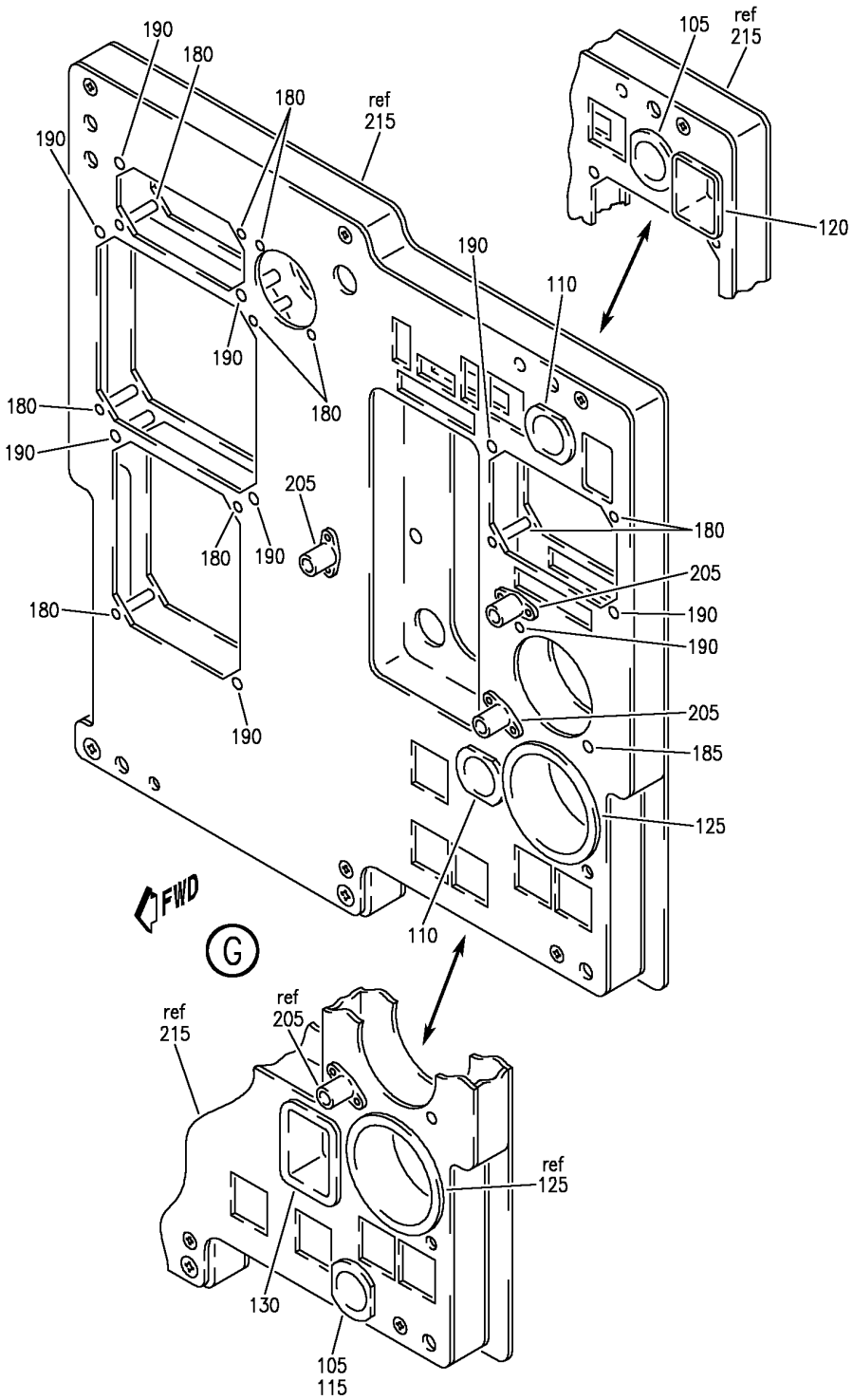

Y 31112630 SHT 4 REV 265

PANEL INSTL-P3-1 (FIRST OFFICER'S INSTRUMENT PANEL ONLY)
FIGURE 30 (SHEET 4)

BOEING PROPRIETARY - Copyright © - Unpublished Work - See title page for details.

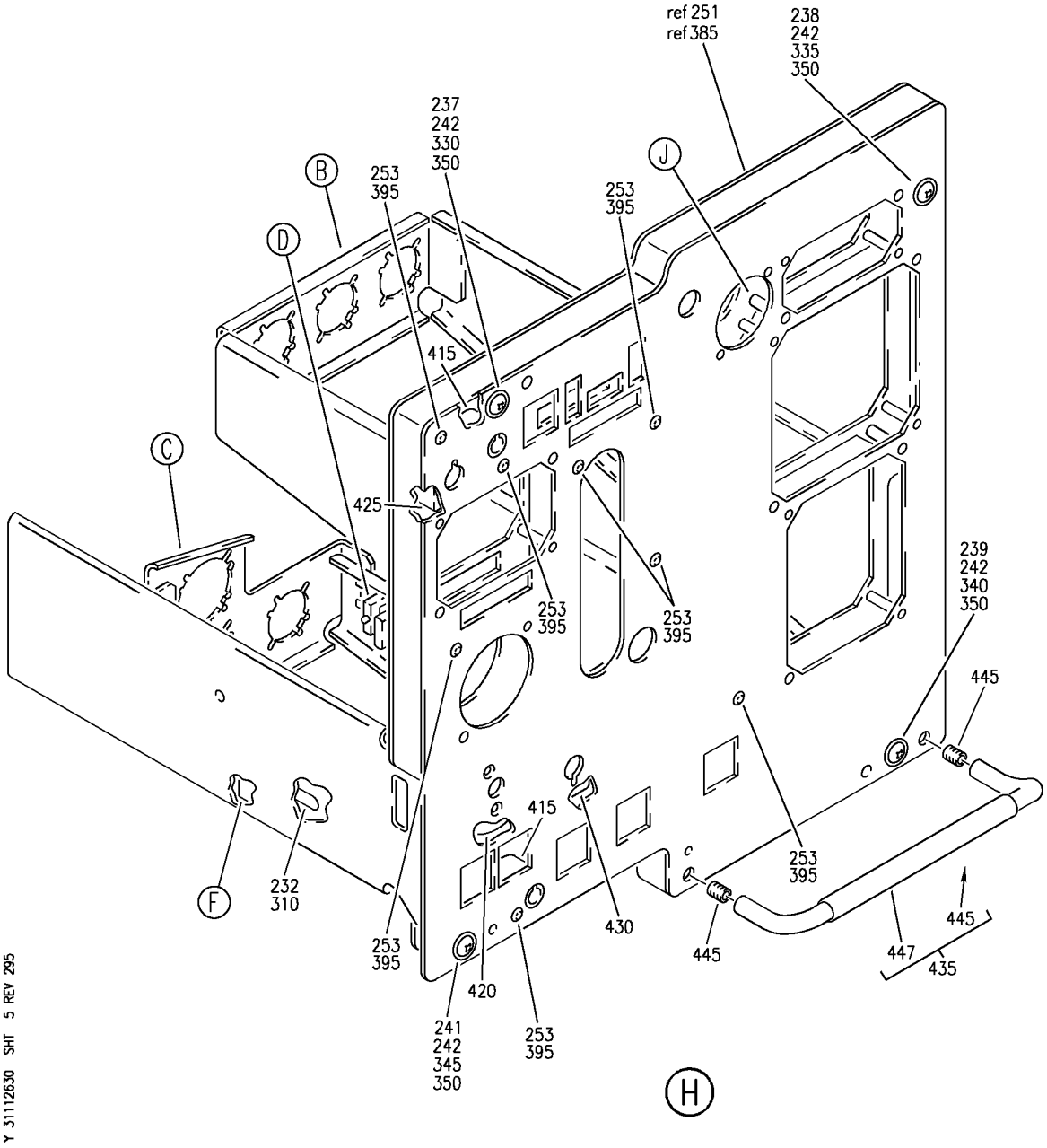

PANEL INSTL-P3-1 (FIRST OFFICER'S INSTRUMENT PANEL ONLY)
FIGURE 30 (SHEET 5)

BOEING PROPRIETARY - Copyright © - Unpublished Work - See title page for details.

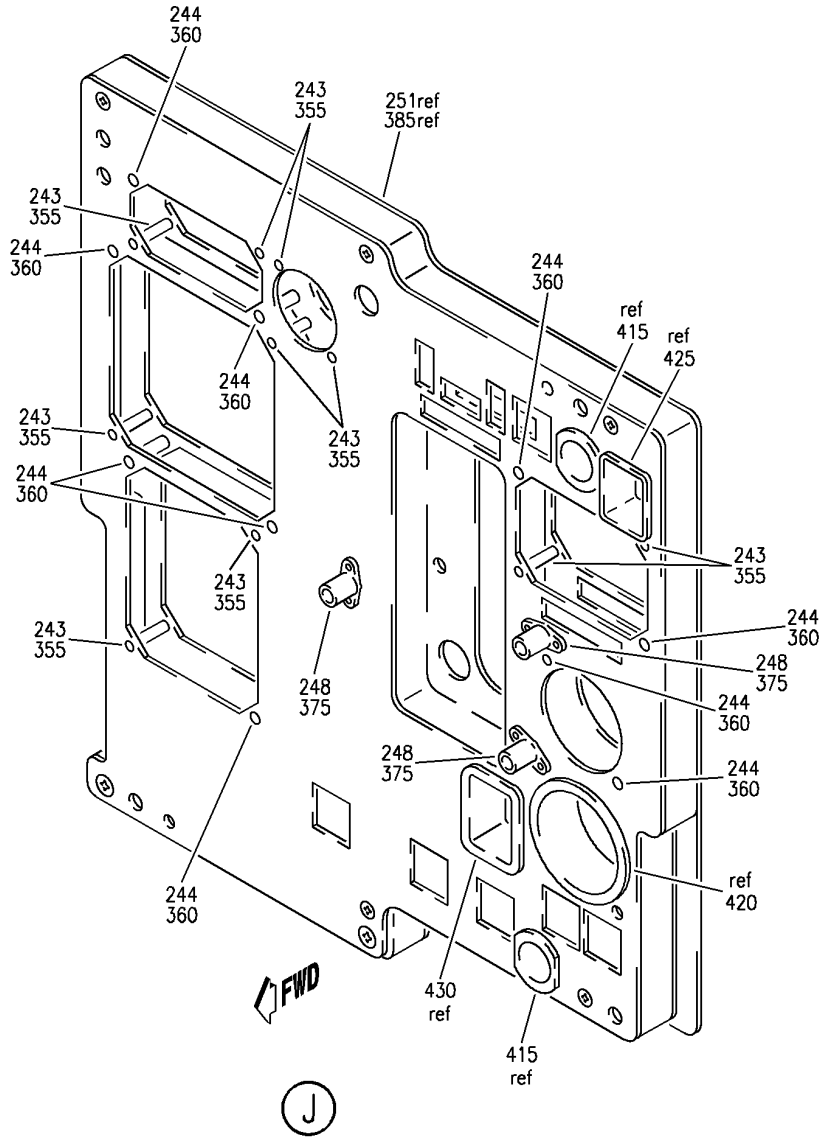

Y 31112630 SHT 6 REV 295

PANEL INSTL-P3-1 (FIRST OFFICER'S INSTRUMENT PANEL ONLY)
FIGURE 30 (SHEET 6)

BOEING PROPRIETARY - Copyright © - Unpublished Work - See title page for details.

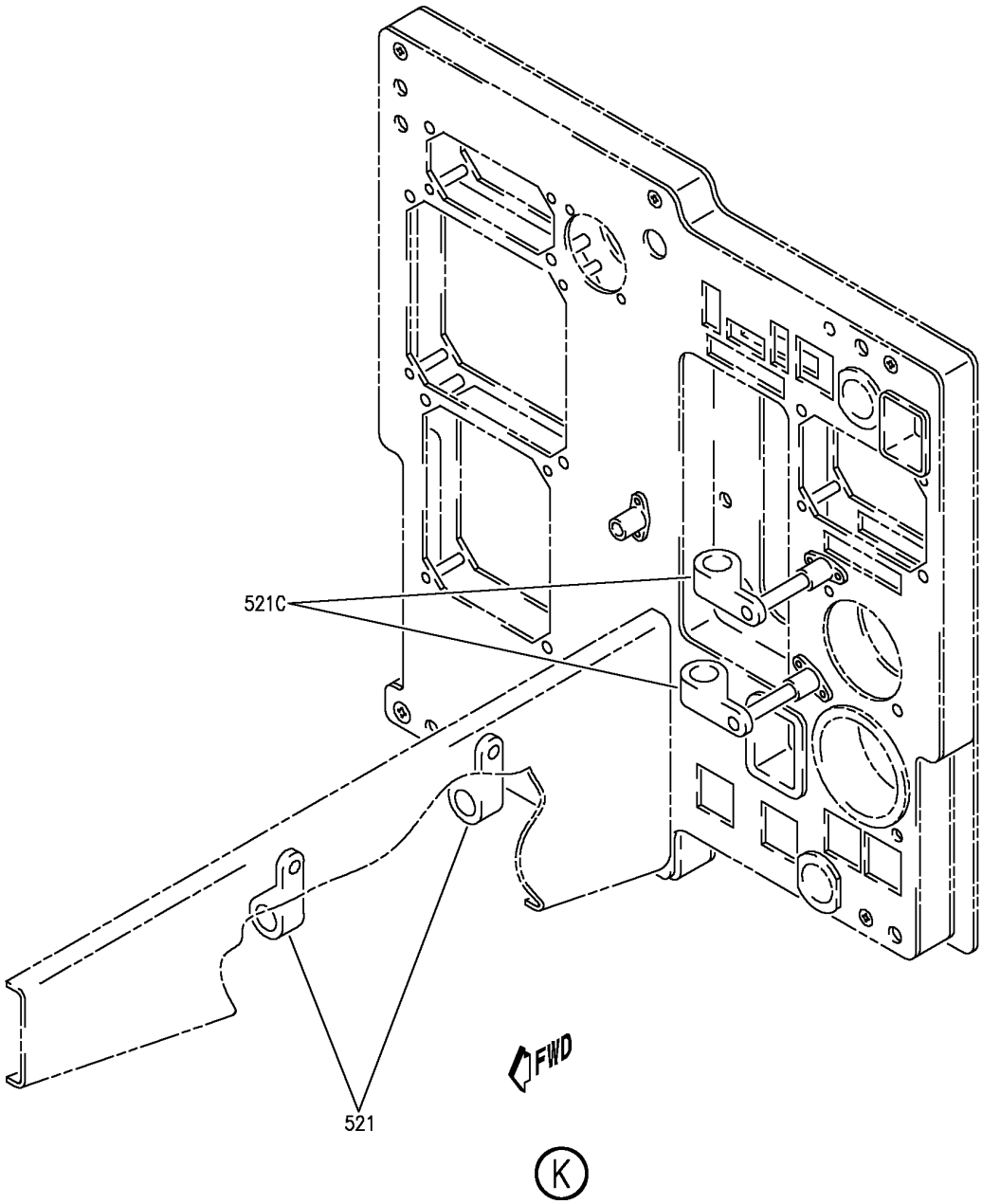

Y 31112630 SHT 7 REV 268

PANEL INSTL-P3-1 (FIRST OFFICER'S INSTRUMENT PANEL ONLY)
FIGURE 30 (SHEET 7)

BOEING PROPRIETARY - Copyright © - Unpublished Work - See title page for details.

FIG ITEM	PART NUMBER	1 2 3 4 5 6 7 NOMENCLATURE	EFFECT FROM TO	UNITS PER ASSY
30				
		PANEL INSTL-P3-1 (FIRST OFFICER'S INSTRUMENT PANEL ONLY)	011100	
- 1	233N2101-1	PANEL INSTL-P3-1 (FIRST OFFICER'S INSTRUMENT PANEL ONLY) VARIABLE DRAWING REF: 233N2101-5039 FOR NHA/OTHER SYS DET SEE: 25-10-00-05A	011100	RF
5	143D6354G2	.PANEL ASSY-THRUST MODE SELECT SUPPLIER CODE: V89954 FUNCTIONAL DESCRIPTION: ALLOWS CREW TO SELECT THRUST LIMIT COMPUTATION MODES SPECIFICATION NUMBER: S241T200-154 ELECTRICAL EQUIP NUMBER: M10258 COMPONENT MAINT MANUAL REF: 22-31-24 FOR BREAKDOWN SEE: 22-31-02-03	011100	RF
10	215-016-001	.INDICATOR-FLAP POSITION SUPPLIER CODE: V26055 SPECIFICATION NUMBER: S231T280-1 ELECTRICAL EQUIP NUMBER: N00015 COMPONENT MAINT MANUAL REF: 27-50-01 FOR BREAKDOWN SEE: 27-58-00-01	011100	RF

MISSING ITEM NUMBERS NOT APPLICABLE

– ITEM NOT ILLUSTRATED

BOEING PROPRIETARY - Copyright © - Unpublished Work - See title page for details.

FIG ITEM	PART NUMBER	1 2 3 4 5 6 7 NOMENCLATURE	EFFECT FROM TO	UNITS PER ASSY
30				
15	163LCP77	.INDICATOR ASSY-BRAKE PRESSURE SUPPLIER CODE: V35918 SPECIFICATION NUMBER: S231N212-9 ELECTRICAL EQUIP NUMBER: N00010 COMPONENT MAINT MANUAL REF: 32-41-69 OPTIONAL PART: 115-099-9 V34830 FOR BREAKDOWN SEE: 32-41-52-02	011100	RF
15	115-099-9	.INDICATOR ASSY-BRAKE PRESSURE SUPPLIER CODE: V34830 SPECIFICATION NUMBER: S231T231-9 ELECTRICAL EQUIP NUMBER: N00010 COMPONENT MAINT MANUAL REF: 29-31-01 OPTIONAL PART: 163LCP77 V35918 FOR BREAKDOWN SEE: 32-41-52-02	011100	RF
15	115-099-7	.INDICATOR ASSY-BRAKE PRESSURE SUPPLIER CODE: V34830 SPECIFICATION NUMBER: S231T231-5 ELECTRICAL EQUIP NUMBER: N00010 COMPONENT MAINT MANUAL REF: 29-31-01 FOR BREAKDOWN SEE: 32-41-52-02	011100	RF

MISSING ITEM NUMBERS NOT APPLICABLE

– ITEM NOT ILLUSTRATED

BOEING PROPRIETARY - Copyright © - Unpublished Work - See title page for details.

FIG ITEM	PART NUMBER	1 2 3 4 5 6 7 NOMENCLATURE	EFFECT FROM TO	UNITS PER ASSY
30				
20	622-5374-002	.INDICATOR ASSY-AUTOLAND STATUS SUPPLIER CODE: V4V792 SPECIFICATION NUMBER: S241T120-1 ELECTRICAL EQUIP NUMBER: N00071 COMPONENT MAINT MANUAL REF: 22-14-70 FOR BREAKDOWN SEE: 22-14-01-02	011100	RF
25	4039891-903	.INDICATOR-MACH AIRSPEED SUPPLIER CODE: V58960 SPECIFICATION NUMBER: S231T100-1 ELECTRICAL EQUIP NUMBER: N00041 COMPONENT MAINT MANUAL REF: 34-13-09 FOR BREAKDOWN SEE: 34-13-02-01	011100	RF
30	622-5001-109	.INDICATOR ASSY-DME/RADIO MAGNETIC SUPPLIER CODE: V4V792 SPECIFICATION NUMBER: S242T403-109 ELECTRICAL EQUIP NUMBER: N00043 COMPONENT MAINT MANUAL REF: 34-22-73 QUALIFIED I/W DATA: S242T403-107 (622-5007-107) RB S242T403-109 (622-5007-109) WITH THE INCORPORATION OF S/B 757-34-0018 AND VENDOR S/B (ROCKWELL COLLINS) RDM1 743-34-10(R1) FOR BREAKDOWN SEE: 34-22-05-02	011100	RF

MISSING ITEM NUMBERS NOT APPLICABLE

– ITEM NOT ILLUSTRATED

BOEING PROPRIETARY - Copyright © - Unpublished Work - See title page for details.

FIG ITEM	PART NUMBER	1 2 3 4 5 6 7 NOMENCLATURE	EFFECT FROM TO	UNITS PER ASSY
30				
35	233N2222-301	.MODULE ASSY- COMPONENT MAINT MANUAL REF: 31-11-49 PRE ALERT SB: 33A0044 FOR OTHER SYS DETAILS SEE: 11-31-01-24 22-14-01-02 22-31-02-03 26-17-51-02 27-51-57-02 27-58-00-01 27-81-00-03 32-35-52-02 32-41-52-02 32-61-51-02 33-13-57-02 34-13-02-01 34-22-05-02 34-46-51-02	011100	1
35	233N2222-1301	.MODULE ASSY- COMPONENT MAINT MANUAL REF: 31-11-49 POST ALERT SB: 33A0044 FOR OTHER SYS DETAILS SEE: 11-31-01-24 22-14-01-02 22-31-02-03 26-17-51-02 27-51-57-02 27-58-00-01 27-81-00-03 32-35-52-02 32-41-52-02 32-61-51-02 33-13-57-02 34-13-02-01 34-22-05-02 34-46-51-02	011100	1
- 40	233N2222-77	..MODULE ASSY- PRE ALERT SB: 33A0044	011100	RF
- 40	233N2222-1077	..MODULE ASSY- POST ALERT SB: 33A0044	011100	RF
45	BAC27NEL0340	...DECAL- PLACARD CONTENT: AP0301	011100	1

MISSING ITEM NUMBERS NOT APPLICABLE

– ITEM NOT ILLUSTRATED

BOEING PROPRIETARY - Copyright © - Unpublished Work - See title page for details.

FIG ITEM	PART NUMBER	1 2 3 4 5 6 7 NOMENCLATURE	EFFECT FROM TO	UNITS PER ASSY
30				
50	BAC27NEL0187	...DECAL-	011100	1
		PLACARD CONTENT:		
		1		
55	BAC27NEL0188	...DECAL-	011100	1
		PLACARD CONTENT:		
		2		
60	BAC27NEL0189	...DECAL-	011100	1
		PLACARD CONTENT:		
		3		
65	BAC27NEL0190	...DECAL-	011100	1
		PLACARD CONTENT:		
		4		
70	BAC27NEL0191	...DECAL-	011100	1
		PLACARD CONTENT:		
		5		
75	BAC27NEL0192	...DECAL-	011100	1
		PLACARD CONTENT:		
		6		
80	BAC27NFDE0093	...DECAL-	011100	1
		PLACARD CONTENT:		
		TB0070		
85	BAC27NFDE0094	...DECAL-	011100	1
		PLACARD CONTENT:		
		TB0071		
105	233T2220-10	...CUP ASSY	011100	2
120	233T2220-30	...CUP ASSY	011100	1
125	233T2220-24	...CUP ASSY	011100	1
130	233T2220-19	...CUP ASSY	011100	1
135	233T2218-6	...FOOTREST ASSY	011100	1
		ATTACHING PARTS		
- 140	NAS514P1032-24	...SCREW-	011100	2
		-------*-------		
145	MS21209F1-30	....INSERT	011100	2
150	233T2218-8	....FOOTREST	011100	1
155	BACS21Y37R	...STUD ASSY-	011100	1
160	BACS21Y35R	...STUD ASSY-	011100	1
165	BACS21Y36R	...STUD ASSY-	011100	1
170	BACS21Y33R	...STUD ASSY-	011100	1
175	1127700	...WASHER-	011100	4
		SUPPLIER CODE:		
		V60119		
		SPECIFICATION NUMBER:		
		BACW10X4		
		OPTIONAL PART:		
		2600LW		
		V71286		
180	012001-101	...SPACER-CRIMP	011100	10
		SUPPLIER CODE:		
		V28277		

MISSING ITEM NUMBERS NOT APPLICABLE

- ITEM NOT ILLUSTRATED

BOEING PROPRIETARY - Copyright © - Unpublished Work - See title page for details.

FIG ITEM	PART NUMBER	1 2 3 4 5 6 7 NOMENCLATURE	EFFECT FROM TO	UNITS PER ASSY
30				
185	350-1	...SPACER-	011100	1
		SUPPLIER CODE:		
		V28277		
190	350-1	...SPACER-	011100	9
		SUPPLIER CODE:		
		V28277		
195	BACC49A1	...CLAMP-	011100	4
200	H21-1	...SPACER-	011100	2
		SUPPLIER CODE:		
		V34941		
		SPECIFICATION NUMBER:		
		BACS18AR1		
		OPTIONAL PART:		
		FAB276A		
		V15805		
		YHLZ1C2		
		V09922		
205	WS1-4A6	...NUT-PLATE	011100	3
		SUPPLIER CODE:		
		V04169		
		SPECIFICATION NUMBER:		
		BACN10TL3A6		
		ATTACHING PARTS		
- 210	BACR15BB4D	...RIVET-	011100	6
		-------*-------		
215	233N2226-94	...PANEL ASSY-	011100	1
		POSITION DATA:		
		FWD		
		ATTACHING PARTS		
- 216	NAS514P832-8	...SCREW-	011100	5
		-------*-------		
217	GR1003	....NUT-INSERT	011100	8
		SUPPLIER CODE:		
		V0625B		
219	233N2226-80	....BACKPLATE-	011100	1
		ALTERED FROM PART NUMBER:		
		233N2242-1		
221	233N2226-95	....FRAME-	011100	1
		ALTERED FROM PART NUMBER:		
		233N2230-1		
- 500	286N0002-001	WIRE BUNDLE ASSY-	011100	RF
510	BACC45FN14-15P6	.CONNECTOR-	011100	1
		ELECTRICAL EQUIP NUMBER:		
		D42174J		
		WIRING DIAGRAM REF:		
		323511		

MISSING ITEM NUMBERS NOT APPLICABLE

- ITEM NOT ILLUSTRATED

BOEING PROPRIETARY - Copyright © - Unpublished Work - See title page for details.

FIG ITEM	PART NUMBER	1 2 3 4 5 6 7 NOMENCLATURE	EFFECT FROM TO	UNITS PER ASSY
30				
515	BACC45FN22-55P8	.RECEPTACLE- ELECTRICAL EQUIP NUMBER: D40834J WIRING DIAGRAM REF: 323111	011100	1
520	BACC45FN22-55P	.CONNECTOR- ELECTRICAL EQUIP NUMBER: D40836J WIRING DIAGRAM REF: 326112	011100	1
- 525	286N0003-005	WIRE BUNDLE ASSY- REWORKED BY ALERT SB: 34A0222	011100	RF
535	BACC45FT14D15S6	.CONNECTOR- ELECTRICAL EQUIP NUMBER: D42174P WIRING DIAGRAM REF: 323511	011100	1
- 540	BACC45FT22D55S8	.PLUG- ELECTRICAL EQUIP NUMBER: D40834P WIRING DIAGRAM REF: 223112	011100	1
545	BACC45FT22D55S	.CONNECTOR- ELECTRICAL EQUIP NUMBER: D40836P WIRING DIAGRAM REF: 223211	011100	1

MISSING ITEM NUMBERS NOT APPLICABLE

- ITEM NOT ILLUSTRATED

BOEING PROPRIETARY - Copyright © - Unpublished Work - See title page for details.

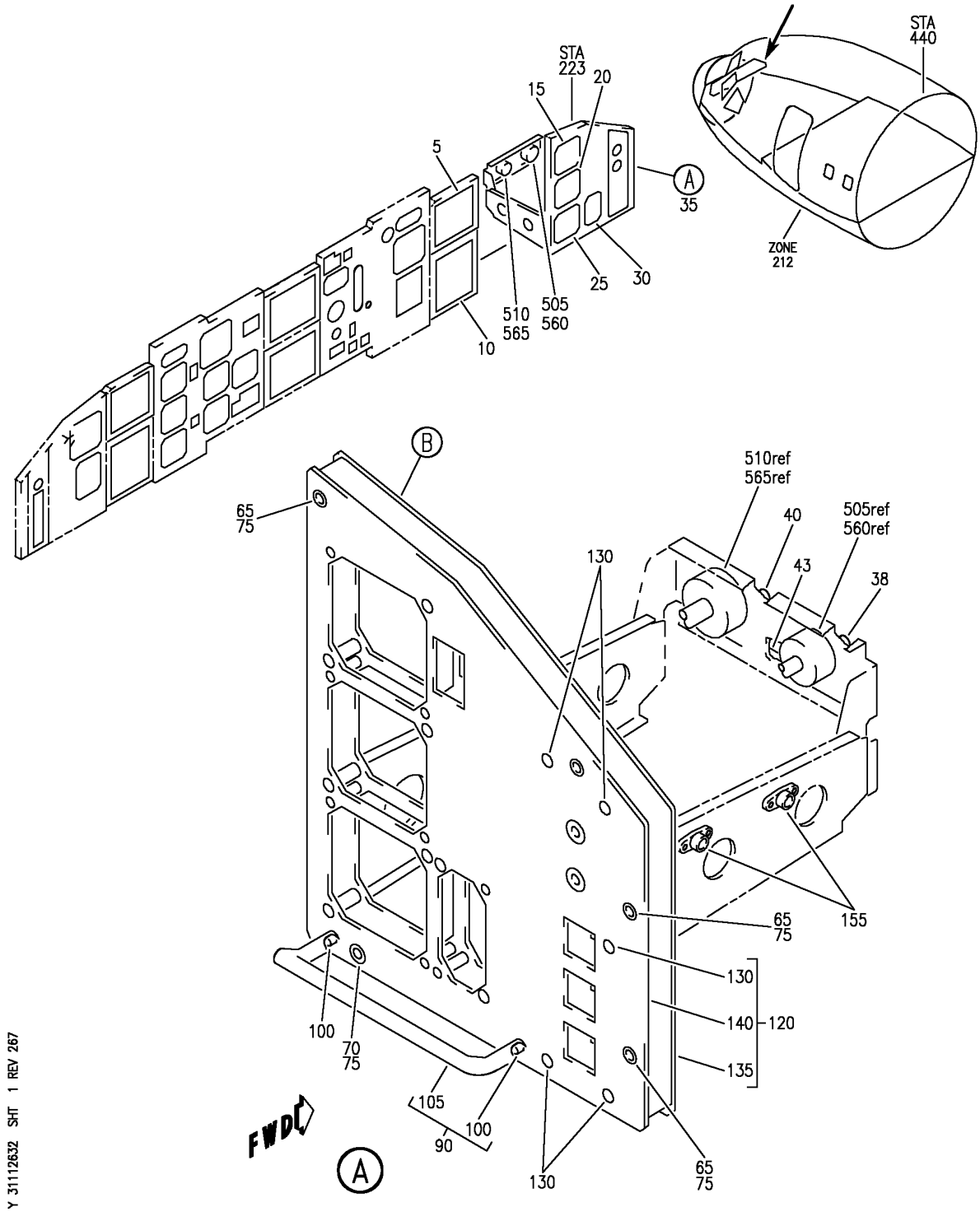

PANEL INSTL-FIRST OFFICERS P3-3 (INDICATING AND RECORDING ONLY) FWD
FIGURE 32 (SHEET 1)

BOEING PROPRIETARY - Copyright © - Unpublished Work - See title page for details.

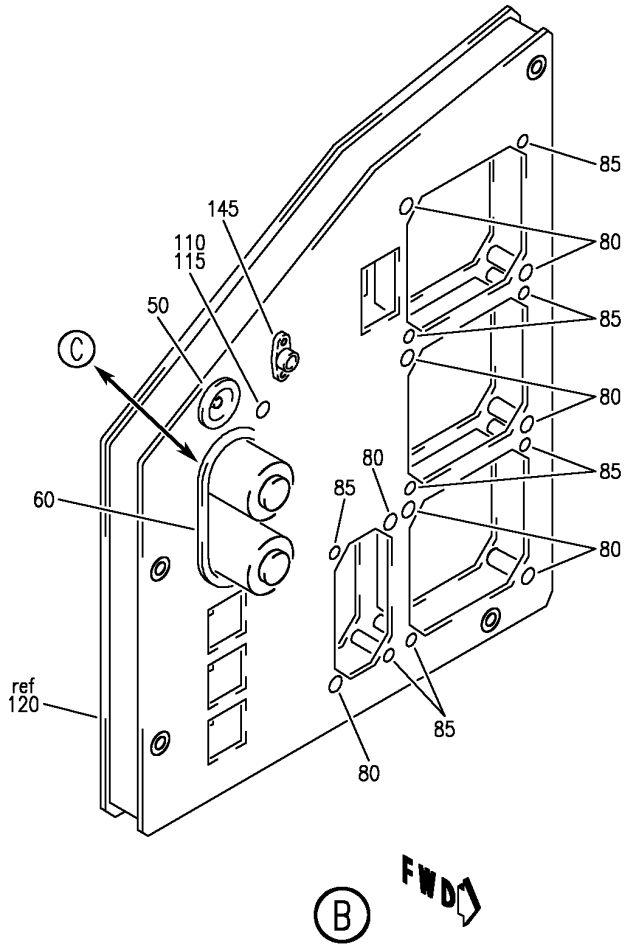

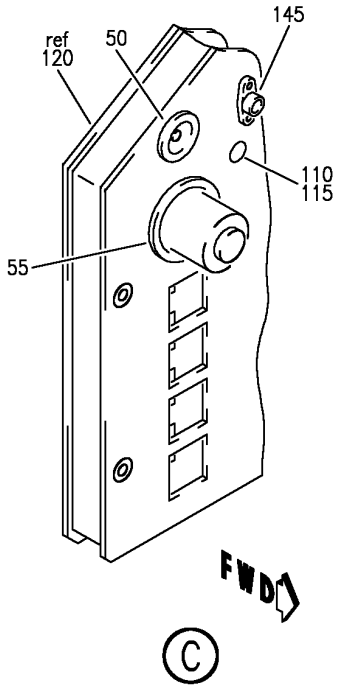

Y 31112632 SHT 2 REV 271

PANEL INSTL-FIRST OFFICERS P3-3 (INDICATING AND RECORDING ONLY) FWD
FIGURE 32 (SHEET 2)

BOEING PROPRIETARY - Copyright © - Unpublished Work - See title page for details.

FIG ITEM	PART NUMBER	1 2 3 4 5 6 7 NOMENCLATURE	EFFECT FROM TO	UNITS PER ASSY
32				
		PANEL INSTL-FIRST OFFICERS P3-3 (INDICATING AND RECORDING ONLY) FWD	121503 904949	
- 1	233N2101-1	PANEL INSTL-FIRST OFFICERS P3-3 (INDICATING AND RECORDING ONLY) POSITION DATA: FWD VARIABLE DRAWING REF: 233N2101-5003 FOR NHA/OTHER SYS DET SEE: 25-10-00-05A	121503 904949	RF
5	622-5047-101	.INDICATOR ASSY-ELECTRONIC ATTITUDE DIRECTOR MULTICOLOR DISPLAY UNIT SUPPLIER CODE: V4V792 SPECIFICATION NUMBER: S242T404-502 ELECTRICAL EQUIP NUMBER: N00044 COMPONENT MAINT MANUAL REF: 34-22-71 FOR BREAKDOWN SEE: 34-22-03-03	121503 904949	RF
5	622-5047-100	.INDICATOR ASSY-ELECTRONIC ATTITUDE DIRECTOR MULTICOLOR DISPLAY UNIT SUPPLIER CODE: V4V792 SPECIFICATION NUMBER: S242T404-501 ELECTRICAL EQUIP NUMBER: N00044 COMPONENT MAINT MANUAL REF: 34-22-71 FOR BREAKDOWN SEE: 34-22-03-03	121503 904949	RF

MISSING ITEM NUMBERS NOT APPLICABLE

- ITEM NOT ILLUSTRATED

BOEING PROPRIETARY - Copyright © - Unpublished Work - See title page for details.

FIG ITEM	PART NUMBER	1 2 3 4 5 6 7 NOMENCLATURE	EFFECT FROM TO	UNITS PER ASSY
32				
5	622-7998-002	.INDICATOR ASSY-ELECTRONIC ATTITUDE DIRECTOR MULTICOLOR DISPLAY UNIT SUPPLIER CODE: V4V792 SPECIFICATION NUMBER: S242T404-510 ELECTRICAL EQUIP NUMBER: N00044 COMPONENT MAINT MANUAL REF: 34-22-60 OPTIONAL PART: 622-7998-003 V4V792 FOR BREAKDOWN SEE: 34-22-03-03	121503 904949	RF
5	622-7998-003	.INDICATOR ASSY-ELECTRONIC ATTITUDE DIRECTOR MULTICOLOR DISPLAY UNIT SUPPLIER CODE: V4V792 SPECIFICATION NUMBER: S242T404-511 ELECTRICAL EQUIP NUMBER: N00044 COMPONENT MAINT MANUAL REF: 34-22-60 FOR BREAKDOWN SEE: 34-22-03-03	121503 904949	RF
10	622-5046-101	.INDICATOR ASSY-ELECTRONIC HORIZ SITUATION MULTICOLOR DISPLAY UNIT SUPPLIER CODE: V4V792 SPECIFICATION NUMBER: S242T404-602 ELECTRICAL EQUIP NUMBER: N00045 COMPONENT MAINT MANUAL REF: 34-22-71 FOR BREAKDOWN SEE: 34-22-04-01	121503 904949	RF

MISSING ITEM NUMBERS NOT APPLICABLE

– ITEM NOT ILLUSTRATED

BOEING PROPRIETARY - Copyright © - Unpublished Work - See title page for details.

FIG ITEM	PART NUMBER	1 2 3 4 5 6 7 NOMENCLATURE	EFFECT FROM TO	UNITS PER ASSY
32				
10	622-5046-100	.INDICATOR ASSY-ELECTRONIC HORIZ SITUATION MULTICOLOR DISPLAY UNIT SUPPLIER CODE: V4V792 SPECIFICATION NUMBER: S242T404-601 ELECTRICAL EQUIP NUMBER: N00045 COMPONENT MAINT MANUAL REF: 34-22-71 FOR BREAKDOWN SEE: 34-22-04-01	121503 904949	RF
10	622-7999-002	.INDICATOR ASSY-ELECTRONIC HORIZ SITUATION MULTICOLOR DISPLAY UNIT SUPPLIER CODE: V4V792 FUNCTIONAL DESCRIPTION: CATHODE RAY TUBE USED AS AN HSI TO DISPLAY INERTIAL REFERENCE SYSTEM GENERATED TRACK AND HEADING AND AS A DISPLAY UNIT FOR THE EICAS SYSTEM SPECIFICATION NUMBER: S242T404-610 ELECTRICAL EQUIP NUMBER: N00045 COMPONENT MAINT MANUAL REF: 34-22-61 OPTIONAL PART: 622-5046-101 V4V792 FOR BREAKDOWN SEE: 34-22-04-01	121503 904949	RF

MISSING ITEM NUMBERS NOT APPLICABLE

– ITEM NOT ILLUSTRATED

BOEING PROPRIETARY - Copyright © - Unpublished Work - See title page for details.

FIG ITEM	PART NUMBER	1 2 3 4 5 6 7 NOMENCLATURE	EFFECT FROM TO	UNITS PER ASSY
32				
10	622-7999-003	.INDICATOR ASSY-ELECTRONIC HORIZ SITUATION MULTICOLOR DISPLAY UNIT SUPPLIER CODE: V4V792 SPECIFICATION NUMBER: S242T404-611 MISCELLANEOUS DATA: 622-7999-013 IS IDENTICAL TO 622-7999-003 EXCEPT THAT THE BEZEL COLOR IS GRAY INSTEAD OF BROWN. 622-7999-013 IS INTERCHANGEABLE WITH 622-7999-003 SUBJECT TO CUSTOMER PREFERENCE SEE SPARES DWG. 242N5002 FOR 757 INTERCHANGEABILITY FOR 767 SEE 242T4213 ELECTRICAL EQUIP NUMBER: N00045 COMPONENT MAINT MANUAL REF: 34-22-60 OPTIONAL PART: 622-5046-101 V4V792 622-7999-002 V4V792 FOR BREAKDOWN SEE: 34-22-04-01	121503 904949	RF
15	4039892-904	.INDICATOR ASSY-ALTM SUPPLIER CODE: V58960 SPECIFICATION NUMBER: S231T101-1 ELECTRICAL EQUIP NUMBER: N00048 COMPONENT MAINT MANUAL REF: 34-13-08 QUALIFIED I/W DATA: INTERCHANGEABLE AS A SHIPSET FOR BREAKDOWN SEE: 34-13-01-01	121503 904949	RF

MISSING ITEM NUMBERS NOT APPLICABLE

– ITEM NOT ILLUSTRATED

BOEING PROPRIETARY - Copyright © - Unpublished Work - See title page for details.

FIG ITEM	PART NUMBER	1 2 3 4 5 6 7 NOMENCLATURE	EFFECT FROM TO	UNITS PER ASSY
32				
20	4039893-902	.INDICATOR-VERT. SPEED SUPPLIER CODE: V58960 SPECIFICATION NUMBER: S231T102-1 ELECTRICAL EQUIP NUMBER: N00049 COMPONENT MAINT MANUAL REF: 34-13-07 FOR BREAKDOWN SEE: 34-22-06-03	121503 904949	RF
25	622-5002-203	.INDICATOR ASSY-RADIO MAGNETIC/DME SUPPLIER CODE: V4V792 SPECIFICATION NUMBER: S242T403-204 ELECTRICAL EQUIP NUMBER: N10026 COMPONENT MAINT MANUAL REF: 34-22-74 FOR BREAKDOWN SEE: 34-22-05-01	121503 904949	RF
30	622-6006-002	.ANNUNCIATOR ASSY-RADIO MAGNETIC IND BRG SUPPLIER CODE: V4V792 SPECIFICATION NUMBER: S242T403-401 ELECTRICAL EQUIP NUMBER: N10027 COMPONENT MAINT MANUAL REF: 34-22-77	121503 904949	RF
35	233N2223-15	.MODULE ASSY- FOR OTHER SYS DETAILS SEE: 33-13-57-01 34-12-01-04 34-13-01-01 34-21-02-04 34-22-00-02 34-22-02-06 34-22-06-03 34-22-07-03 34-32-00-01 34-61-02-15	121503 904949	1
38	BAC27NEL0187	..DECAL- PLACARD CONTENT: 1	121503 904949	1

MISSING ITEM NUMBERS NOT APPLICABLE

— ITEM NOT ILLUSTRATED

BOEING PROPRIETARY - Copyright © - Unpublished Work - See title page for details.

FIG ITEM	PART NUMBER	1 2 3 4 5 6 7 NOMENCLATURE	EFFECT FROM TO	UNITS PER ASSY
32				
40	BAC27NEL0188	..DECAL-	121503	1
		PLACARD CONTENT:	904949	
		2		
43	BAC27NEL0341	..DECAL-	121503	1
		PLACARD CONTENT:	904949	
		AP0303		
50	233T2220-4	..CUP ASSY	121503	1
			904949	
55	233T2220-1	..CUP ASSY-	121503	1
			904949	
65	BACS21Y34R	..STUD ASSY	121503	3
			904949	
70	BACS21Y33R	..STUD ASSY	121503	1
			904949	
75	1127700	..WASHER	121503	4
		SUPPLIER CODE:	904949	
		V60119		
		SPECIFICATION NUMBER:		
		BACW10X4		
		OPTIONAL PART:		
		2600LW		
		V71286		
80	350-1	..SPACER-	121503	8
		SUPPLIER CODE:	904949	
		V28277		
85	012001-101	..SPACER-CRIMP	121503	8
		SUPPLIER CODE:	904949	
		V28277		
90	233T2218-2	..FOOTREST ASSY	121503	1
			904949	
		ATTACHING PARTS		
- 95	NAS514P1032-24	..SCREW	121503	2
			904949	
		-------*-------		
100	MS21209F1-30	...INSERT	121503	2
			904949	
105	233T2218-4	...FOOTREST	121503	1
			904949	

MISSING ITEM NUMBERS NOT APPLICABLE

- ITEM NOT ILLUSTRATED

BOEING PROPRIETARY - Copyright © - Unpublished Work - See title page for details.

FIG ITEM	PART NUMBER	1 2 3 4 5 6 7 NOMENCLATURE	EFFECT FROM TO	UNITS PER ASSY
32				
110	BRH10A3	..NUT-	121503	1
		SUPPLIER CODE:	904949	
		V52828		
		SPECIFICATION NUMBER:		
		BACN10JC3		
		OPTIONAL PART:		
		H10-3BAC		
		V15653		
		NS202101-02		
		V80539		
		RMLH9075-3W		
		V72962		
		VN303A02		
		V92215		
		96-02		
		V80539		
		T6S1032J		
		V11815		
115	VNS1924CA1-8	..STUD-	121503	1
		SUPPLIER CODE:	904949	
		V5M902		
		SPECIFICATION NUMBER:		
		BACS53B1EA1		
		OPTIONAL PART:		
		VNS1924CA3-1-8		
		V92215		
120	233N2227-10	..PANEL ASSY-	121503	1
		POSITION DATA:	904949	
		FWD		
		ATTACHING PARTS		
- 125	NAS514P832-8	..SCREW	121503	4
			904949	
		-------*-------		
130	GR1003	...NUT-INSERT	121503	5
		SUPPLIER CODE:	904949	
		V0625B		
135	233N2227-12	...BACKPLATE-	121503	1
		ALTERED FROM PART NUMBER:	904949	
		233N2243-1		
		V89954		
140	233N2227-11	...FRAME ASSY-	121503	1
		ALTERED FROM PART NUMBER:	904949	
		233N2231-1		
		V89954		
145	WSI4-22	..NUT	121503	1
		SUPPLIER CODE:	904949	
		V04169		
		SPECIFICATION NUMBER:		
		BACN10TL3-22		

MISSING ITEM NUMBERS NOT APPLICABLE

- ITEM NOT ILLUSTRATED

BOEING PROPRIETARY - Copyright © - Unpublished Work - See title page for details.

FIG ITEM	PART NUMBER	1 2 3 4 5 6 7 NOMENCLATURE	EFFECT FROM TO	UNITS PER ASSY
32				
		ATTACHING PARTS		
- 150	BACR15BB3AD	..RIVET-	121503	2
		SIZE DETERMINED ON INSTL.	904949	
		-------*-------		
155	WSI4-6	..NUTPLATE	121503	2
		SUPPLIER CODE:	904949	
		V04169		
		SPECIFICATION NUMBER:		
		BACN10TL3-6		
		ATTACHING PARTS		
- 160	BACR15BA3AD	..RIVET-	121503	4
		SIZE DETERMINED ON INSTL.	904949	
		-------*-------		
- 500	286N0033-002	WIRE BUNDLE ASSY-	121503	RF
			904949	
505	BACC45FN16-24P7	.CONNECTOR-	121503	1
		ELECTRICAL EQUIP NUMBER:	904949	
		D40249J		
		WIRING DIAGRAM REF:		
		331312		
510	BACC45FN20-41P	.CONNECTOR-	121503	1
		ELECTRICAL EQUIP NUMBER:	904949	
		D40525J		
		WIRING DIAGRAM REF:		
		342227		
- 550	286N0003-002	WIRE BUNDLE ASSY-	121503	RF
		REWORKED BY ALERT SB:	904949	
		34A0222		
560	BACC45FT16A24S7	.CONNECTOR-	121503	1
		POSITION DATA:	904949	
		POSITION 01		
		ELECTRICAL EQUIP NUMBER:		
		D40249P		
		WIRING DIAGRAM REF:		
		342228		
		REWORKED BY ALERT SB:		
		34A0222		
565	BACC45FT20A41S	.CONNECTOR-	121503	1
		ELECTRICAL EQUIP NUMBER:	904949	
		D40525P		
		WIRING DIAGRAM REF:		
		342228		

MISSING ITEM NUMBERS NOT APPLICABLE

- ITEM NOT ILLUSTRATED

BOEING PROPRIETARY - Copyright © - Unpublished Work - See title page for details.

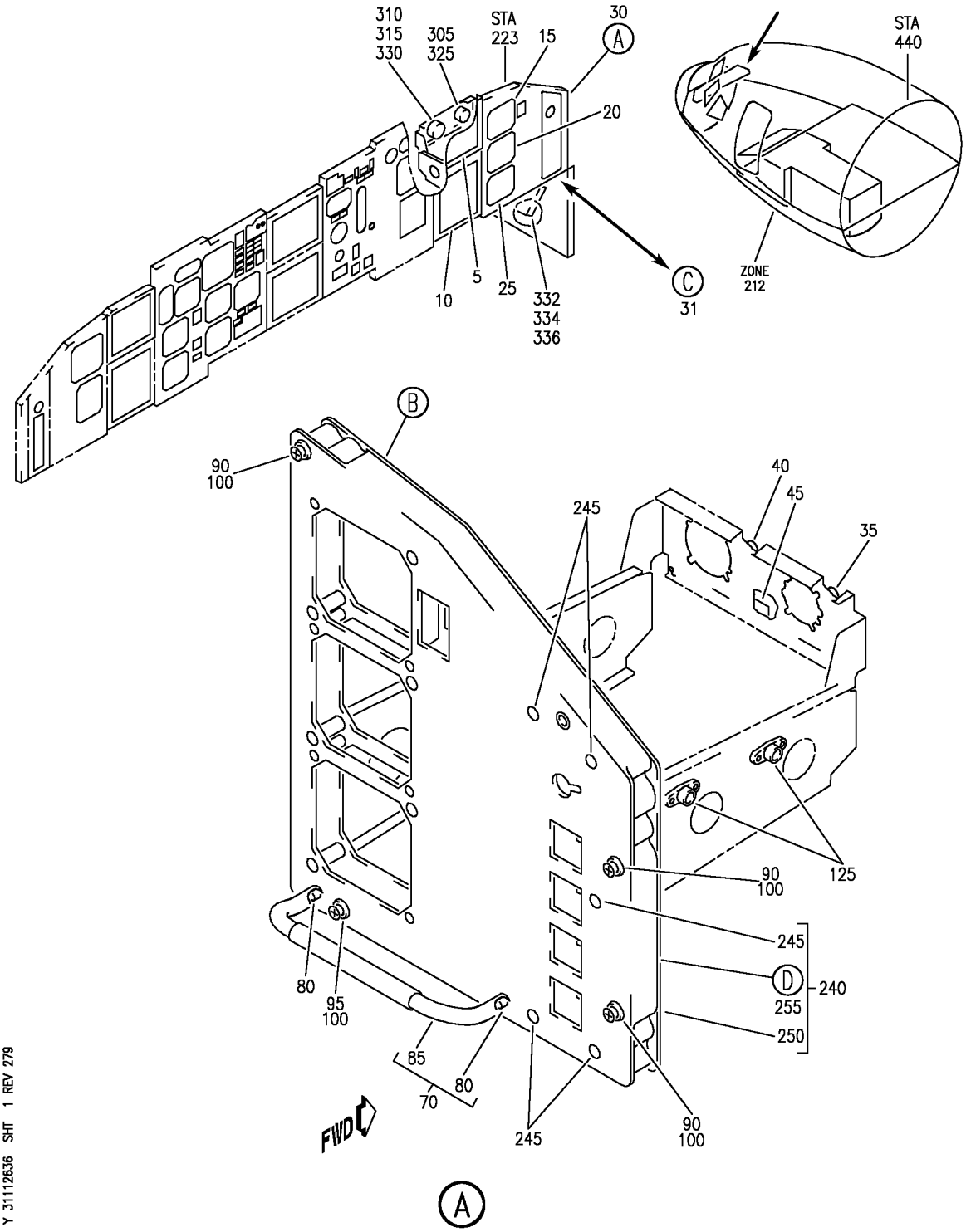

PANEL INSTL-P3-3 (FIRST OFFICER'S INSTRUMENT PANEL ONLY)
FIGURE 36 (SHEET 1)

BOEING PROPRIETARY - Copyright © - Unpublished Work - See title page for details.

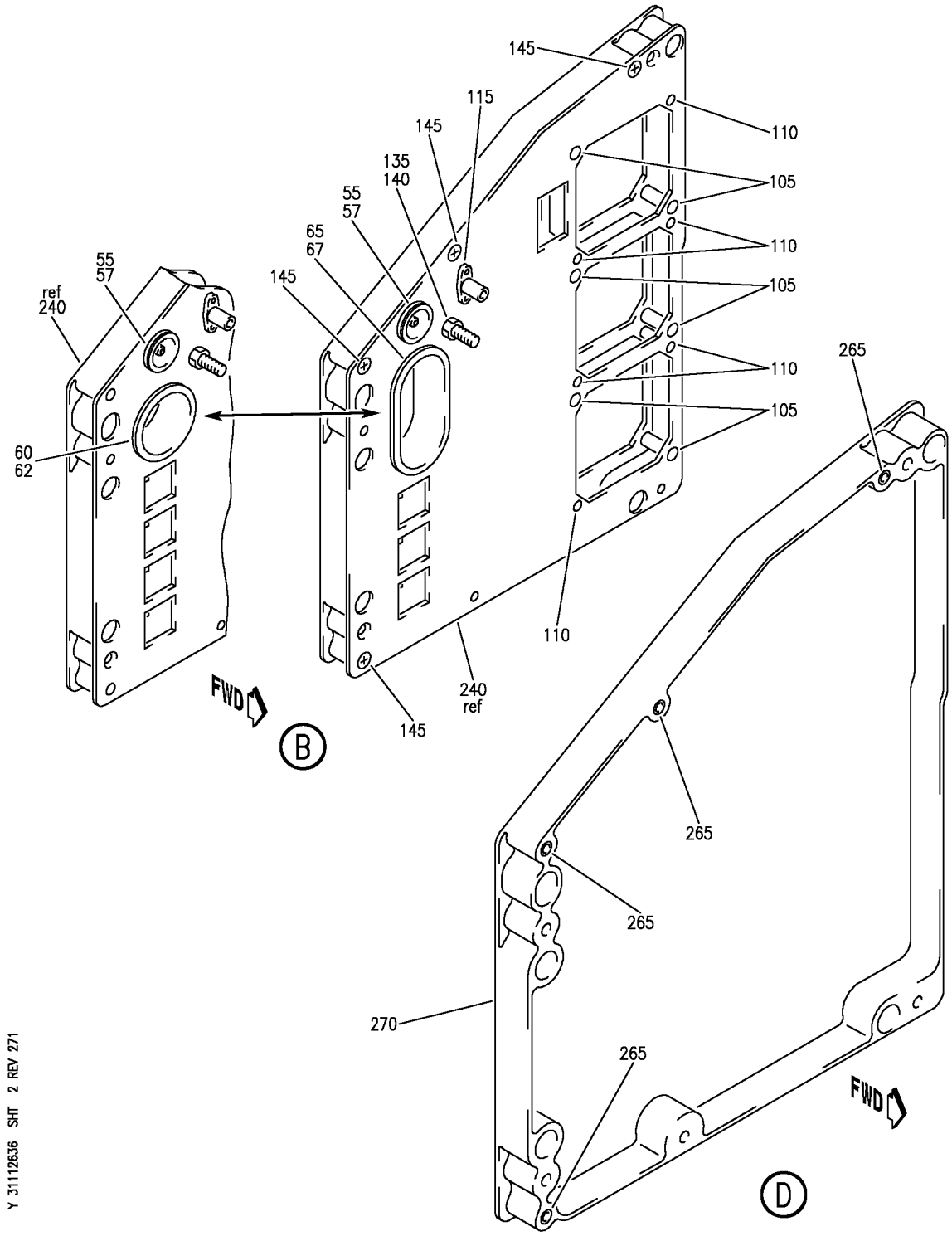

PANEL INSTL-P3-3 (FIRST OFFICER'S INSTRUMENT PANEL ONLY)
FIGURE 36 (SHEET 2)

BOEING PROPRIETARY - Copyright © - Unpublished Work - See title page for details.

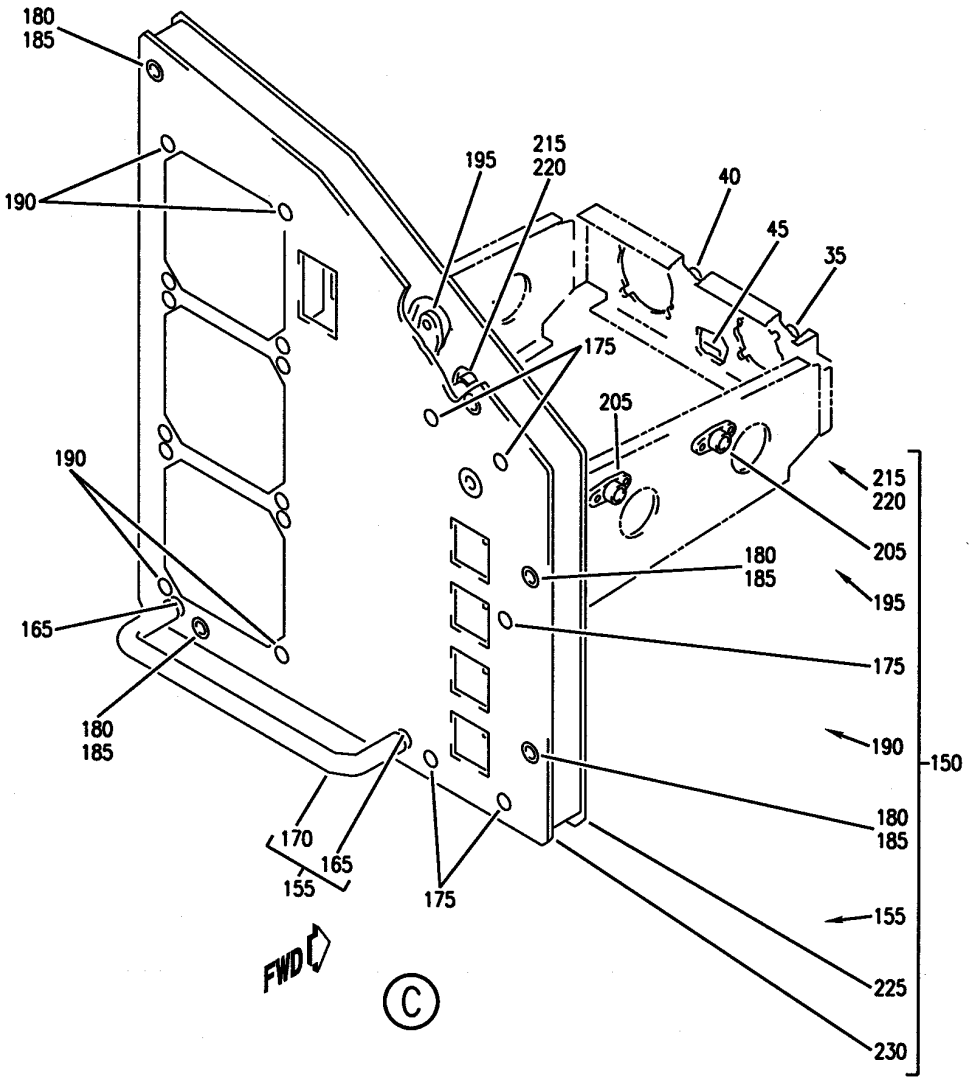

Y 31112636 SHT 3 REV 218

PANEL INSTL-P3-3 (FIRST OFFICER'S INSTRUMENT PANEL ONLY)
FIGURE 36 (SHEET 3)

BOEING PROPRIETARY - Copyright © - Unpublished Work - See title page for details.

FIG ITEM	PART NUMBER	1 2 3 4 5 6 7 NOMENCLATURE	EFFECT FROM TO	UNITS PER ASSY
36				
		PANEL INSTL-P3-3 (FIRST OFFICER'S INSTRUMENT PANEL ONLY)	002004 006010 107107 121503 950999	
- 1	233N2101-1	PANEL INSTL-P3-3 (FIRST OFFICER'S INSTRUMENT PANEL ONLY) VARIABLE DRAWING REF: 233N2101-5004 233N2101-5037 233N2101-5039 233N2101-5041 FOR NHA/OTHER SYS DET SEE: 25-10-00-05A	002004 006010 107107 950999	RF
5	622-5047-101	.INDICATOR ASSY-ELECT. ATTITUDE DIRECTOR MULTICOLOR DISPLAY UNIT SUPPLIER CODE: V4V792 SPECIFICATION NUMBER: S242T404-502 ELECTRICAL EQUIP NUMBER: N00044 COMPONENT MAINT MANUAL REF: 34-22-71 FOR BREAKDOWN SEE: 34-22-03-03	002004 006010 107107 950999	RF
5	622-5047-100	.INDICATOR ASSY-ELECT. ATTITUDE DIRECTOR MULTICOLOR DISPLAY UNIT SUPPLIER CODE: V4V792 SPECIFICATION NUMBER: S242T404-501 ELECTRICAL EQUIP NUMBER: N00044 COMPONENT MAINT MANUAL REF: 34-22-71 FOR BREAKDOWN SEE: 34-22-03-03	002004 006010 107107 950999	RF

MISSING ITEM NUMBERS NOT APPLICABLE

- ITEM NOT ILLUSTRATED

BOEING PROPRIETARY - Copyright © - Unpublished Work - See title page for details.

FIG ITEM	PART NUMBER	1 2 3 4 5 6 7 NOMENCLATURE	EFFECT FROM TO	UNITS PER ASSY
36				
5	622-7998-002	.INDICATOR ASSY-ELECT. ATTITUDE DIRECTOR MULTICOLOR DISPLAY UNIT SUPPLIER CODE: V4V792 SPECIFICATION NUMBER: S242T404-510 ELECTRICAL EQUIP NUMBER: N00044 COMPONENT MAINT MANUAL REF: 34-22-60 FOR BREAKDOWN SEE: 34-22-03-03	002004 006010 107107 950999	RF
5	622-7998-003	.INDICATOR ASSY-ELECT. ATTITUDE DIRECTOR MULTICOLOR DISPLAY UNIT SUPPLIER CODE: V4V792 SPECIFICATION NUMBER: S242T404-511 ELECTRICAL EQUIP NUMBER: N00044 COMPONENT MAINT MANUAL REF: 34-22-60 FOR BREAKDOWN SEE: 34-22-03-03	002004 006010 107107 950999	RF
10	622-5046-101	.INDICATOR ASSY-ELECT. HORIZ SITUATION MULTICOLOR DISPLAY UNIT SUPPLIER CODE: V4V792 SPECIFICATION NUMBER: S242T404-602 ELECTRICAL EQUIP NUMBER: N00045 COMPONENT MAINT MANUAL REF: 34-22-71 FOR BREAKDOWN SEE: 34-22-04-01	002004 006010 107107 950999	RF

MISSING ITEM NUMBERS NOT APPLICABLE

– ITEM NOT ILLUSTRATED

BOEING PROPRIETARY - Copyright © - Unpublished Work - See title page for details.

FIG ITEM	PART NUMBER	1 2 3 4 5 6 7 NOMENCLATURE	EFFECT FROM TO	UNITS PER ASSY
36				
10	622-5046-100	.INDICATOR ASSY-ELECT. HORIZ SITUATION MULTICOLOR DISPLAY UNIT SUPPLIER CODE: V4V792 SPECIFICATION NUMBER: S242T404-601 ELECTRICAL EQUIP NUMBER: N00045 COMPONENT MAINT MANUAL REF: 34-22-71 FOR BREAKDOWN SEE: 34-22-04-01	002004 006010 107107 950999	RF
10	622-7999-002	.INDICATOR ASSY-ELECT. HORIZ SITUATION MULTICOLOR DISPLAY UNIT SUPPLIER CODE: V4V792 FUNCTIONAL DESCRIPTION: CATHODE RAY TUBE USED AS AN HSI TO DISPLAY INERTIAL REFERENCE SYSTEM GENERATED TRACK AND HEADING AND AS A DISPLAY UNIT FOR THE EICAS SYSTEM SPECIFICATION NUMBER: S242T404-610 ELECTRICAL EQUIP NUMBER: N00045 COMPONENT MAINT MANUAL REF: 34-22-61 FOR BREAKDOWN SEE: 34-22-04-01	002004 006010 107107 950999	RF

MISSING ITEM NUMBERS NOT APPLICABLE

— ITEM NOT ILLUSTRATED

BOEING PROPRIETARY - Copyright © - Unpublished Work - See title page for details.

FIG ITEM	PART NUMBER	1 2 3 4 5 6 7 NOMENCLATURE	EFFECT FROM TO	UNITS PER ASSY
36				
10	622-7999-003	.INDICATOR ASSY-ELECT. HORIZ SITUATION MULTICOLOR DISPLAY UNIT SUPPLIER CODE: V4V792 SPECIFICATION NUMBER: S242T404-611 MISCELLANEOUS DATA: 622-7999-013 IS IDENTICAL TO 622-7999-003 EXCEPT THAT THE BEZEL COLOR IS GRAY INSTEAD OF BROWN. 622-7999-013 IS INTERCHANGEABLE WITH 622-7999-003 SUBJECT TO CUSTOMER PREFERENCE SEE SPARES DWG. 242N5002 FOR 757 INTERCHANGEABILITY FOR 767 SEE 242T4213 ELECTRICAL EQUIP NUMBER: N00045 COMPONENT MAINT MANUAL REF: 34-22-60 FOR BREAKDOWN SEE: 34-22-04-01	002004 006010 107107 950999	RF
15	4039892-904	.INDICATOR ASSY-ALTM SUPPLIER CODE: V58960 SPECIFICATION NUMBER: S231T101-1 ELECTRICAL EQUIP NUMBER: N00048 COMPONENT MAINT MANUAL REF: 34-13-08 QUALIFIED I/W DATA: INTERCHANGEABLE AS A SHIPSET FOR BREAKDOWN SEE: 34-13-01-01	107107 950999	RF

MISSING ITEM NUMBERS NOT APPLICABLE

– ITEM NOT ILLUSTRATED

BOEING PROPRIETARY - Copyright © - Unpublished Work - See title page for details.

FIG ITEM	PART NUMBER	1 2 3 4 5 6 7 NOMENCLATURE	EFFECT FROM TO	UNITS PER ASSY
36				
15	4039892-907	.INDICATOR ASSY-ALTM SUPPLIER CODE: V58960 SPECIFICATION NUMBER: S231T101-4 ELECTRICAL EQUIP NUMBER: N00048 COMPONENT MAINT MANUAL REF: 34-13-08 FOR BREAKDOWN SEE: 34-13-01-01	002004 006010	RF
20	4039893-902	.INDICATOR-VERT. SPEED SUPPLIER CODE: V58960 SPECIFICATION NUMBER: S231T102-1 ELECTRICAL EQUIP NUMBER: N00049 COMPONENT MAINT MANUAL REF: 34-13-07 FOR BREAKDOWN SEE: 34-22-06-03	002004 006010 107107 952999	RF
25	65806-002-1	.CLOCK ASSY- SUPPLIER CODE: VF0216 SPECIFICATION NUMBER: S231T120-1 ELECTRICAL EQUIP NUMBER: N00042 COMPONENT MAINT MANUAL REF: 31-25-01 QUALIFIED I/W DATA: 2610-08-1 (60B00303-107) I/W 65806-002-1 (S231T120-1) IN SHIPSETS, FOR ALL FMC EVCEPT S242T102-451 WITH S/W PS4052970-95X, WHERE X CAN BE ANY VALUE, AND S242T102-455. FOR BREAKDOWN SEE: 31-25-01-01	002004 107107 952952	RF

MISSING ITEM NUMBERS NOT APPLICABLE

– ITEM NOT ILLUSTRATED

BOEING PROPRIETARY - Copyright © - Unpublished Work - See title page for details.

	FIG ITEM	PART NUMBER	1 2 3 4 5 6 7 NOMENCLATURE	EFFECT FROM TO	UNITS PER ASSY
	36				
R	25	2610-08-1	.CLOCK ASSY-	006010	RF
R			SUPPLIER CODE:	950951	
R			V52013	953999	
R			FUNCTIONAL DESCRIPTION:		
R			DIGITAL ELECTRONIC		
R			CHRONOMETER, SHOWS		
R			ELAPSED TIME,		
R			CHRONOGRAPH TIME, DATE		
R			AND GREENWICH MEAN TIME.		
R			SPECIFICATION NUMBER:		
R			60B00303-107		
R			ELECTRICAL EQUIP NUMBER:		
R			N00042		
R			COMPONENT MAINT MANUAL REF:		
R			31-21-08		
R			QUALIFIED I/W DATA:		
R			2600-06-1 I/W 2610-08-1		
R			SUBJECT TO CUSTOMER		
R			PREFERENCE		
R			2610-08-1(60B00303-107)		
R			I/W		
R			65806-002-1(S231T120-1)		
R			IN SHIPSETS, FOR ALL FMC		
R			EXCEPT S242T102-451 WITH		
R			S/W PS4052970-95X, WHERE		
R			X CAN BE ANY VALUE, AND		
R			S242T102-455.		
R			FOR BREAKDOWN SEE:		
R			31-25-01-01		
	25	2600-06-1	.CLOCK ASSY-	002004	RF
			SUPPLIER CODE:	107107	
			V52013	952952	
			ELECTRICAL EQUIP NUMBER:		
			N00042		
			COMPONENT MAINT MANUAL REF:		
			31-20-01		
			QUALIFIED I/W DATA:		
			2600-06-1 I/W 2610-08-1		
			SUBJECT TO CUSTOMER		
			PREFERENCE.		
			FOR BREAKDOWN SEE:		
			31-25-01-01		

MISSING ITEM NUMBERS NOT APPLICABLE

– ITEM NOT ILLUSTRATED

BOEING PROPRIETARY - Copyright © - Unpublished Work - See title page for details.

FIG ITEM	PART NUMBER	1 2 3 4 5 6 7 NOMENCLATURE	EFFECT FROM TO	UNITS PER ASSY
36				
30	233N2223-8	.MODULE ASSY- PRE SERVICE BULLETIN: 34-0414 FOR OTHER SYS DETAILS SEE: 31-25-01-01 33-13-57-01 34-12-01-04 34-13-01-01 34-21-02-04 34-22-00-02 34-22-02-06 34-22-06-03 34-32-00-01 34-61-02-15	107107	1
30	233N2223-12	.MODULE ASSY- PRE SERVICE BULLETIN: 34-0416 FOR OTHER SYS DETAILS SEE: 31-25-01-01 33-13-57-01 34-12-01-04 34-13-01-01 34-21-02-04 34-22-00-02 34-22-02-06 34-22-06-03 34-32-00-01 34-61-02-15	002004 006010 950999	1
30	233N2223-61	.MODULE SUB ASSY-P3-3 POST SERVICE BULLETIN: 34-0414 34-0416 FOR OTHER SYS DETAILS SEE: 31-25-01-01 33-13-57-01 34-12-01-04 34-13-01-01 34-21-02-04 34-22-00-02 34-22-02-06 34-22-06-03 34-32-00-01 34-61-02-15	009009 107107	1
35	BAC27NEL0187	..DECAL- PLACARD CONTENT: 1	002004 006010 107107 950999	1

MISSING ITEM NUMBERS NOT APPLICABLE

– ITEM NOT ILLUSTRATED

BOEING PROPRIETARY - Copyright © - Unpublished Work - See title page for details.

FIG ITEM	PART NUMBER	1 2 3 4 5 6 7 NOMENCLATURE	EFFECT FROM TO	UNITS PER ASSY
36				
40	BAC27NEL0188	..DECAL- PLACARD CONTENT: 2	002004 006010 107107 950999	1
45	BAC27NEL0341	..DECAL- PLACARD CONTENT: AP0303	002004 006010 107107 950999	1
55	233T2220-4	..CUP ASSY	002004 006010 107107 950999	1
57	233T2220-6	...SEAL	002004 006010 107107 950999	1
60	233T2220-1	..CUP ASSY- PRE SERVICE BULLETIN: 34-0416	002004 006010 107107 950999	1
62	233T2220-3	...SEAL	002004 006010 107107 950999	1
65	233T2220-33	..CUP ASSY- POST SERVICE BULLETIN: 34-0414 34-0416	009009 107107	1
67	233T2220-35	...SEAL	009009 107107	1
70	233T2218-2	..FOOTREST ASSY	002004 006010 107107 950999	1
		ATTACHING PARTS		
- 75	NAS514P1032-24	..SCREW	002004 006010 107107 950999	2
		-------*-------		
80	MS21209F1-30	...INSERT	002004 006010 107107 950999	2
85	233T2218-4	...FOOTREST	002004 006010 107107 950999	1

MISSING ITEM NUMBERS NOT APPLICABLE

- ITEM NOT ILLUSTRATED

BOEING PROPRIETARY - Copyright © - Unpublished Work - See title page for details.

FIG ITEM	PART NUMBER	1 2 3 4 5 6 7 NOMENCLATURE	EFFECT FROM TO	UNITS PER ASSY
36				
90	BACS21Y34R	..STUD ASSY- PRE SERVICE BULLETIN: 34-0416	002004 006010 107107 950999	3
90	BACS21EE34R	..STUD ASSY- POST SERVICE BULLETIN: 34-0414 34-0416	009009	3
95	BACS21Y33R	..STUD ASSY- PRE SERVICE BULLETIN: 34-0416	002004 006010 107107 950999	1
95	BACS21EE33R	..STUD ASSY- POST SERVICE BULLETIN: 34-0414 34-0416	009009	1
100	1127700	..WASHER SUPPLIER CODE: V60119 SPECIFICATION NUMBER: BACW10X4 OPTIONAL PART: 2600LW V71286	002004 006010 107107 950999	4
105	350-1	..SPACER- SUPPLIER CODE: V28277	002004 006010 107107 950999	6
110	012001-101	..SPACER-CRIMP SUPPLIER CODE: V28277	002004 006010 107107 950999	6
115	WSI4-22	..NUT SUPPLIER CODE: V04169 SPECIFICATION NUMBER: BACN10TL3-22 ATTACHING PARTS	002004 006010 107107 950999	1
- 120	BACR15BB3AD	..RIVET- SIZE DETERMINED ON INSTL. -------*-------	002004 006010 107107 950999	2
125	WSI4-6	..NUTPLATE SUPPLIER CODE: V04169 SPECIFICATION NUMBER: BACN10TL3-6	002004 006010 107107 950999	2

MISSING ITEM NUMBERS NOT APPLICABLE

- ITEM NOT ILLUSTRATED

BOEING PROPRIETARY - Copyright © - Unpublished Work - See title page for details.

FIG ITEM	PART NUMBER	1 2 3 4 5 6 7 NOMENCLATURE	EFFECT FROM TO	UNITS PER ASSY
36				
		ATTACHING PARTS		
- 130	BACR15BA3AD	..RIVET-	002004	4
		SIZE DETERMINED ON INSTL.	006010	
			107107	
			950999	
		-------*-------		
135	BRH10A3	..NUT-	002004	1
		SUPPLIER CODE:	006010	
		V52828	107107	
		SPECIFICATION NUMBER:	950999	
		BACN10JC3		
		OPTIONAL PART:		
		H10-3BAC		
		V15653		
		NS202101-02		
		V80539		
		RMLH9075-3W		
		V72962		
		VN303A02		
		V92215		
		96-02		
		V80539		
		T6S1032J		
		V11815		
140	VNS1924CA2-8	..STUD	002004	1
		SUPPLIER CODE:	006010	
		V5M902	107107	
		SPECIFICATION NUMBER:	950999	
		BACS53B1EA2		
		OPTIONAL PART:		
		VNS1924CA3-2-8		
		V92215		
145	NAS514P832-8	..SCREW	002004	4
			006010	
			107107	
			950999	
240	233N2227-7	..PANEL ASSY-FWD	002004	1
		PRE SERVICE BULLETIN:	006010	
		34-0416	107107	
			950999	
240	233N2227-19	..PANEL ASSY-FWD	009009	1
		POST SERVICE BULLETIN:	107107	
		34-0414		
		34-0416		
245	GR1003	...NUT-INSERT	002004	5
		SUPPLIER CODE:	006010	
		V0625B	107107	
		PRE SERVICE BULLETIN:	950999	
		34-0416		

MISSING ITEM NUMBERS NOT APPLICABLE

– ITEM NOT ILLUSTRATED

BOEING PROPRIETARY - Copyright © - Unpublished Work - See title page for details.

FIG ITEM	PART NUMBER	1 2 3 4 5 6 7 NOMENCLATURE	EFFECT FROM TO	UNITS PER ASSY
36				
245	NAS1330A06K106	...NUT-	009009	5
		OPTIONAL PART:	107107	
		GR1003		
		V0625B		
		POST SERVICE BULLETIN:		
		34-0414		
		34-0416		
245	GR1003	...NUT-INSERT	009009	5
		SUPPLIER CODE:	107107	
		V0625B		
		OPTIONAL PART:		
		NAS1330A06K106		
		POST SERVICE BULLETIN:		
		34-0414		
		34-0416		
250	233N2227-9	...BACKPLATE-	002004	1
		ALTERED FROM PART NUMBER:	006010	
		233N2243-1	107107	
		V89954	950999	
		PRE SERVICE BULLETIN:		
		34-0416		
250	233N2227-21	...BACKPLATE-	009009	1
		ALTERED FROM PART NUMBER:	107107	
		233N2243-1		
		V89954		
		POST SERVICE BULLETIN:		
		34-0414		
		34-0416		
255	233N2227-8	...FRAME ASSY-	002004	1
		ALTERED FROM PART NUMBER:	006010	
		233N2231-1	107107	
		V89954	950999	
		PRE SERVICE BULLETIN:		
		34-0416		
255	233N2227-20	...FRAME ASSY-	009009	1
		ALTERED FROM PART NUMBER:	107107	
		233N2231-1		
		V89954		
		POST SERVICE BULLETIN:		
		34-0414		
		34-0416		
- 260	233N2231-1	....FRAME ASSY-	002004	1
		SUPPLIER CODE:	006010	
		V89954	107107	
			950999	
265	MS21209C0825P	.....INSERT	002004	4
			006010	
			107107	
			950999	

MISSING ITEM NUMBERS NOT APPLICABLE

- ITEM NOT ILLUSTRATED

BOEING PROPRIETARY - Copyright © - Unpublished Work - See title page for details.

FIG ITEM	PART NUMBER	1 2 3 4 5 6 7 NOMENCLATURE	EFFECT FROM TO	UNITS PER ASSY
36				
270	233N2231-2	.....FRAME- SUPPLIER CODE: V89954	002004 006010 107107 950999	1
- 300	286N0033-002	WIRE BUNDLE ASSY-	002004 006010 107107 121503 950999	RF
305	BACC45FN16-24P7	.CONNECTOR- ELECTRICAL EQUIP NUMBER: D40249J WIRING DIAGRAM REF: 331312	002004 006010 107107 121503 950999	1
315	BACC45FN20-41P	.CONNECTOR- ELECTRICAL EQUIP NUMBER: D40525J WIRING DIAGRAM REF: 342227	002004 006010 107107 121503 950999	1
- 320	286N0003-002	WIRE BUNDLE ASSY- REWORKED BY ALERT SB: 34A0222	121503	RF
- 320	286N0003-003	WIRE BUNDLE ASSY- REWORKED BY ALERT SB: 34A0222	107107	RF
- 320	286N0003-005	WIRE BUNDLE ASSY- REWORKED BY ALERT SB: 34A0222	002004 006010 950999	RF
325	BACC45FT16A24S7	.CONNECTOR- POSITION DATA: POSITION 01 ELECTRICAL EQUIP NUMBER: D40249P WIRING DIAGRAM REF: 342228 REWORKED BY ALERT SB: 34A0222	002004 006010 107107 121503 950999	1
330	BACC45FT20A41S	.CONNECTOR- POSITION DATA: POSITION 02 ELECTRICAL EQUIP NUMBER: D40525P WIRING DIAGRAM REF: 342228 REWORKED BY ALERT SB: 34A0222	002004 006010 107107 121503 950999	1

MISSING ITEM NUMBERS NOT APPLICABLE

- ITEM NOT ILLUSTRATED

BOEING PROPRIETARY - Copyright © - Unpublished Work - See title page for details.

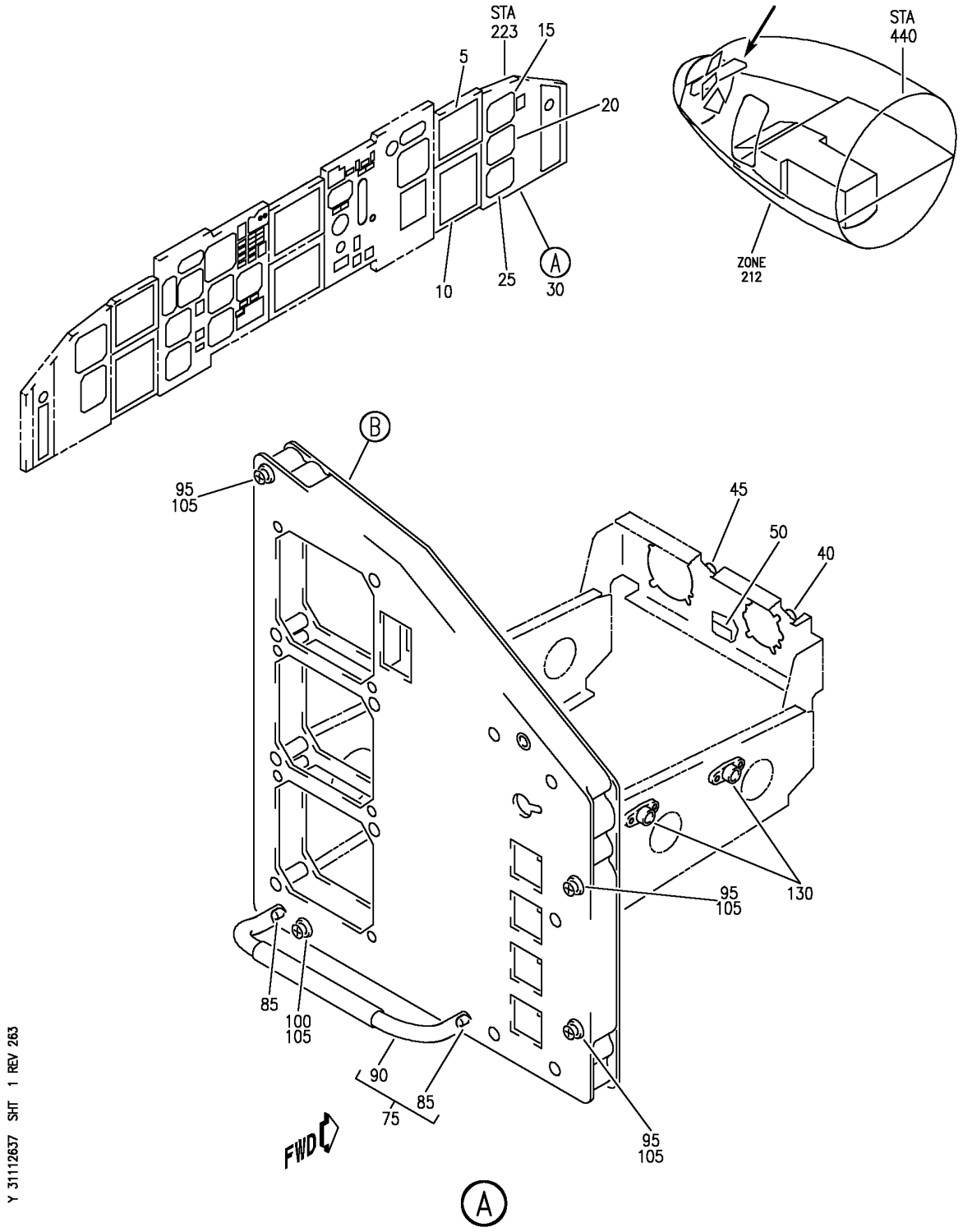

PANEL INSTL-P3-3 (FIRST OFFICER'S INSTRUMENT PANEL ONLY)
FIGURE 37 (SHEET 1)

BOEING PROPRIETARY - Copyright © - Unpublished Work - See title page for details.

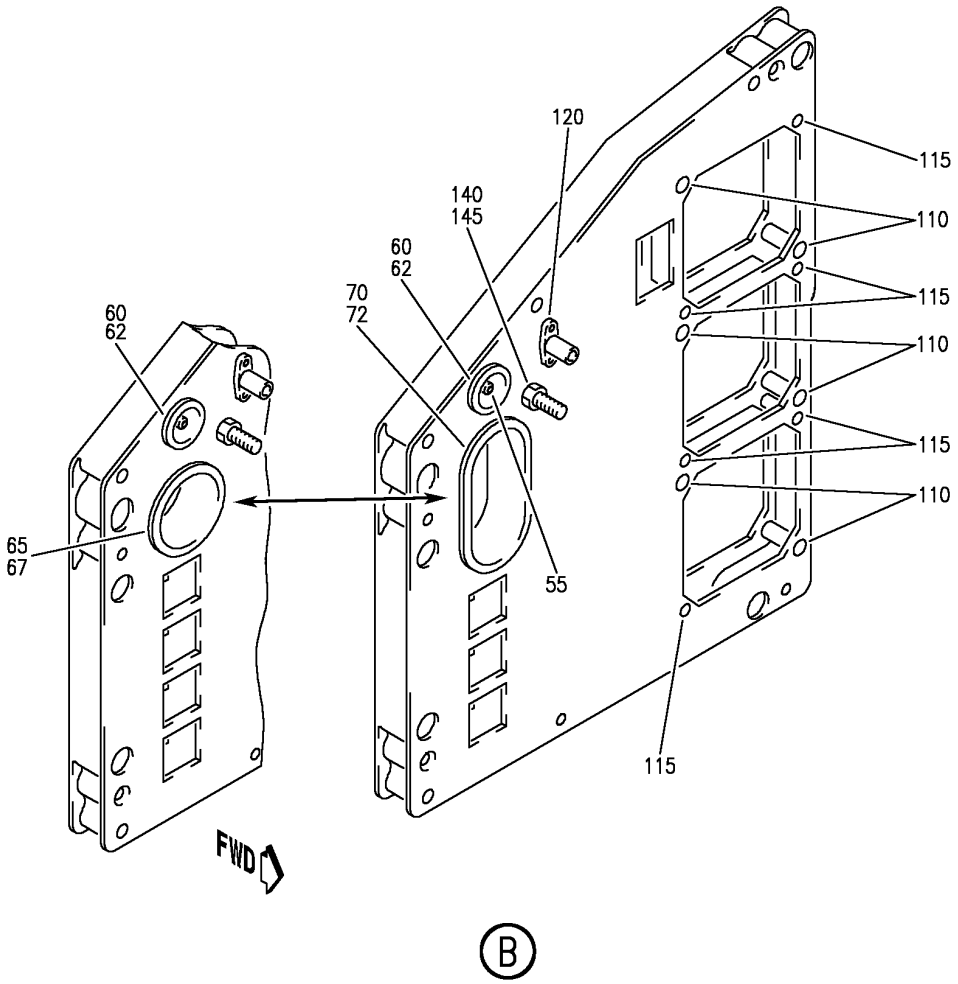

Y 31112637 SHT 2 REV 263

PANEL INSTL-P3-3 (FIRST OFFICER'S INSTRUMENT PANEL ONLY)
FIGURE 37 (SHEET 2)

BOEING PROPRIETARY - Copyright © - Unpublished Work - See title page for details.

FIG ITEM	PART NUMBER	1 2 3 4 5 6 7 NOMENCLATURE	EFFECT FROM TO	UNITS PER ASSY
37				
		PANEL INSTL-P3-3 (FIRST OFFICER'S INSTRUMENT PANEL ONLY)	011100	
- 1	233N2101-1	PANEL INSTL-P3-3 (FIRST OFFICER'S INSTRUMENT PANEL ONLY) VARIABLE DRAWING REF: 233N2101-5039 FOR NHA/OTHER SYS DET SEE: 25-10-00-05A	011100	RF
5	622-7998-003	.INDICATOR ASSY-ELECT. ATTITUDE DIRECTOR MULTICOLOR DISPLAY UNIT SUPPLIER CODE: V4V792 SPECIFICATION NUMBER: S242T404-511 ELECTRICAL EQUIP NUMBER: N00044 COMPONENT MAINT MANUAL REF: 34-22-60 FOR BREAKDOWN SEE: 34-22-03-03	011100	RF
5	622-5047-101	.INDICATOR ASSY-ELECT. ATTITUDE DIRECTOR MULTICOLOR DISPLAY UNIT SUPPLIER CODE: V4V792 SPECIFICATION NUMBER: S242T404-502 ELECTRICAL EQUIP NUMBER: N00044 COMPONENT MAINT MANUAL REF: 34-22-71 FOR BREAKDOWN SEE: 34-22-03-03	011100	RF
5	622-5047-100	.INDICATOR ASSY-ELECT. ATTITUDE DIRECTOR MULTICOLOR DISPLAY UNIT SUPPLIER CODE: V4V792 SPECIFICATION NUMBER: S242T404-501 ELECTRICAL EQUIP NUMBER: N00044 COMPONENT MAINT MANUAL REF: 34-22-71 FOR BREAKDOWN SEE: 34-22-03-03	011100	RF

MISSING ITEM NUMBERS NOT APPLICABLE

- ITEM NOT ILLUSTRATED

BOEING PROPRIETARY - Copyright © - Unpublished Work - See title page for details.

FIG ITEM	PART NUMBER	1 2 3 4 5 6 7 NOMENCLATURE	EFFECT FROM TO	UNITS PER ASSY
37				
5	622-7998-002	.INDICATOR ASSY-ELECT. ATTITUDE DIRECTOR MULTICOLOR DISPLAY UNIT SUPPLIER CODE: V4V792 SPECIFICATION NUMBER: S242T404-510 ELECTRICAL EQUIP NUMBER: N00044 COMPONENT MAINT MANUAL REF: 34-22-60 FOR BREAKDOWN SEE: 34-22-03-03	011100	RF
10	622-7999-003	.INDICATOR ASSY-ELECT. HORIZ SITUATION MULTICOLOR DISPLAY UNIT SUPPLIER CODE: V4V792 SPECIFICATION NUMBER: S242T404-611 MISCELLANEOUS DATA: 622-7999-013 IS IDENTICAL TO 622-7999-003 EXCEPT THAT THE BEZEL COLOR IS GRAY INSTEAD OF BROWN. 622-7999-013 IS INTERCHANGEABLE WITH 622-7999-003 SUBJECT TO CUSTOMER PREFERENCE SEE SPARES DWG. 242N5002 FOR 757 INTERCHANGEABILITY FOR 767 SEE 242T4213 ELECTRICAL EQUIP NUMBER: N00045 COMPONENT MAINT MANUAL REF: 34-22-60 FOR BREAKDOWN SEE: 34-22-04-01	011100	RF

MISSING ITEM NUMBERS NOT APPLICABLE

– ITEM NOT ILLUSTRATED

BOEING PROPRIETARY - Copyright © - Unpublished Work - See title page for details.

FIG ITEM	PART NUMBER	1 2 3 4 5 6 7 NOMENCLATURE	EFFECT FROM TO	UNITS PER ASSY
37				
10	622-5046-101	.INDICATOR ASSY-ELECT. HORIZ SITUATION MULTICOLOR DISPLAY UNIT SUPPLIER CODE: V4V792 SPECIFICATION NUMBER: S242T404-602 ELECTRICAL EQUIP NUMBER: N00045 COMPONENT MAINT MANUAL REF: 34-22-71 FOR BREAKDOWN SEE: 34-22-04-01	011100	RF
10	622-5046-100	.INDICATOR ASSY-ELECT. HORIZ SITUATION MULTICOLOR DISPLAY UNIT SUPPLIER CODE: V4V792 SPECIFICATION NUMBER: S242T404-601 ELECTRICAL EQUIP NUMBER: N00045 COMPONENT MAINT MANUAL REF: 34-22-71 FOR BREAKDOWN SEE: 34-22-04-01	011100	RF
10	622-7999-002	.INDICATOR ASSY-ELECT. HORIZ SITUATION MULTICOLOR DISPLAY UNIT SUPPLIER CODE: V4V792 FUNCTIONAL DESCRIPTION: CATHODE RAY TUBE USED AS AN HSI TO DISPLAY INERTIAL REFERENCE SYSTEM GENERATED TRACK AND HEADING AND AS A DISPLAY UNIT FOR THE EICAS SYSTEM SPECIFICATION NUMBER: S242T404-610 ELECTRICAL EQUIP NUMBER: N00045 COMPONENT MAINT MANUAL REF: 34-22-61 FOR BREAKDOWN SEE: 34-22-04-01	011100	RF

MISSING ITEM NUMBERS NOT APPLICABLE

– ITEM NOT ILLUSTRATED

BOEING PROPRIETARY - Copyright © - Unpublished Work - See title page for details.

FIG ITEM	PART NUMBER	1 2 3 4 5 6 7 NOMENCLATURE	EFFECT FROM TO	UNITS PER ASSY
37				
15	4039892-907	.INDICATOR ASSY-ALTM SUPPLIER CODE: V58960 SPECIFICATION NUMBER: S231T101-4 ELECTRICAL EQUIP NUMBER: N00048 COMPONENT MAINT MANUAL REF: 34-13-08 FOR BREAKDOWN SEE: 34-13-01-02	011100	RF
20	4039893-902	.INDICATOR-VERT. SPEED SUPPLIER CODE: V58960 SPECIFICATION NUMBER: S231T102-1 ELECTRICAL EQUIP NUMBER: N00049 COMPONENT MAINT MANUAL REF: 34-13-07 FOR BREAKDOWN SEE: 34-22-06-02	011100	RF

MISSING ITEM NUMBERS NOT APPLICABLE

– ITEM NOT ILLUSTRATED

BOEING PROPRIETARY - Copyright © - Unpublished Work - See title page for details.

	FIG ITEM	PART NUMBER	1 2 3 4 5 6 7 NOMENCLATURE	EFFECT FROM TO	UNITS PER ASSY
	37				
R	25	2610-08-1	.CLOCK ASSY-	011100	RF
R			SUPPLIER CODE:		
R			V52013		
R			FUNCTIONAL DESCRIPTION:		
R			DIGITAL ELECTRONIC		
R			CHRONOMETER, SHOWS		
R			ELAPSED TIME,		
R			CHRONOGRAPH TIME, DATE		
R			AND GREENWICH MEAN TIME.		
R			SPECIFICATION NUMBER:		
R			60B00303-107		
R			ELECTRICAL EQUIP NUMBER:		
R			N00042		
R			COMPONENT MAINT MANUAL REF:		
R			31-21-08		
R			QUALIFIED I/W DATA:		
R			2600-06-1 I/W		
R			2610-08-1 SUBJECT TO		
R			CUSTOMER PREFERENCE		
R			2610-08-1(60B00303-107)		
R			I/W		
R			65806-002-1(S231T120-1)		
R			IN SHIPSETS, FOR ALL FMC		
R			EXCEPT S242T102-451 WITH		
R			S/W PS4052970-95X, WHERE		
R			X CAN BE ANY VALUE, AND		
R			S242T102-455.		
R			FOR BREAKDOWN SEE:		
R			31-25-01-02		
	30	233N2223-301	.MODULE ASSY-	011100	1
			COMPONENT MAINT MANUAL REF:		
			31-11-50		
			FOR OTHER SYS DETAILS SEE:		
			31-25-01-02		
			33-13-57-02		
			34-12-01-05		
			34-13-01-02		
			34-21-02-03		
			34-22-00-01		
			34-22-02-05		
			34-22-06-02		
			34-32-00-02		
			34-61-02-14		
-	35	233N2223-12	..MODULE ASSY-	011100	RF
	40	BAC27NEL0187	...DECAL-	011100	1
			PLACARD CONTENT:		
			1		

MISSING ITEM NUMBERS NOT APPLICABLE

– ITEM NOT ILLUSTRATED

BOEING PROPRIETARY - Copyright © - Unpublished Work - See title page for details.

FIG ITEM	PART NUMBER	1 2 3 4 5 6 7 NOMENCLATURE	EFFECT FROM TO	UNITS PER ASSY
37				
45	BAC27NEL0188	...DECAL-	011100	1
		PLACARD CONTENT:		
		2		
50	BAC27NEL0341	...DECAL-	011100	1
		PLACARD CONTENT:		
		AP0303		
60	233T2220-4	...CUP ASSY	011100	1
62	233T2220-6	....SEAL	011100	1
65	233T2220-1	...CUP ASSY-	011100	1
67	233T2220-3	....SEAL	011100	1
75	233T2218-2	...FOOTREST ASSY	011100	1
		ATTACHING PARTS		
- 80	NAS514P1032-24	...SCREW-	011100	2
		-------*-------		
85	MS21209F1-30	....INSERT	011100	2
90	233T2218-4	....FOOTREST	011100	1
95	BACS21Y34R	...STUD ASSY-	011100	3
100	BACS21Y33R	...STUD ASSY-	011100	1
105	1127700	...WASHER	011100	4
		SUPPLIER CODE:		
		V60119		
		SPECIFICATION NUMBER:		
		BACW10X4		
		OPTIONAL PART:		
		2600LW		
		V71286		
110	350-1	...SPACER-	011100	6
		SUPPLIER CODE:		
		V28277		
115	012001-101	...SPACER-CRIMP	011100	6
		SUPPLIER CODE:		
		V28277		
120	WSI4-22	...NUT	011100	1
		SUPPLIER CODE:		
		V04169		
		SPECIFICATION NUMBER:		
		BACN10TL3-22		
		ATTACHING PARTS		
- 125	BACR15BB3AD	...RIVET-	011100	2
		SIZE DETERMINED ON INSTL.		
		-------*-------		
130	WSI4-6	...NUTPLATE	011100	2
		SUPPLIER CODE:		
		V04169		
		SPECIFICATION NUMBER:		
		BACN10TL3-6		

MISSING ITEM NUMBERS NOT APPLICABLE

- ITEM NOT ILLUSTRATED

BOEING PROPRIETARY - Copyright © - Unpublished Work - See title page for details.

FIG ITEM	PART NUMBER	1 2 3 4 5 6 7 NOMENCLATURE	EFFECT FROM TO	UNITS PER ASSY
37				
		ATTACHING PARTS		
- 135	BACR15BA3AD	...RIVET-	011100	4
		SIZE DETERMINED ON INSTL.		
		-------*-------		
140	BRH10A3	...NUT-	011100	1
		SUPPLIER CODE:		
		V52828		
		SPECIFICATION NUMBER:		
		BACN10JC3		
		OPTIONAL PART:		
		H10-3BAC		
		V15653		
		NS202101-02		
		V80539		
		RMLH9075-3W		
		V72962		
		VN303A02		
		V92215		
		96-02		
		V80539		
		T6S1032J		
		V11815		
145	VNS1924CA2-8	...STUD	011100	1
		SUPPLIER CODE:		
		V5M902		
		SPECIFICATION NUMBER:		
		BACS53B1EA2		
		OPTIONAL PART:		
		VNS1924CA3-2-8		
		V92215		

MISSING ITEM NUMBERS NOT APPLICABLE

- ITEM NOT ILLUSTRATED

BOEING PROPRIETARY - Copyright © - Unpublished Work - See title page for details.

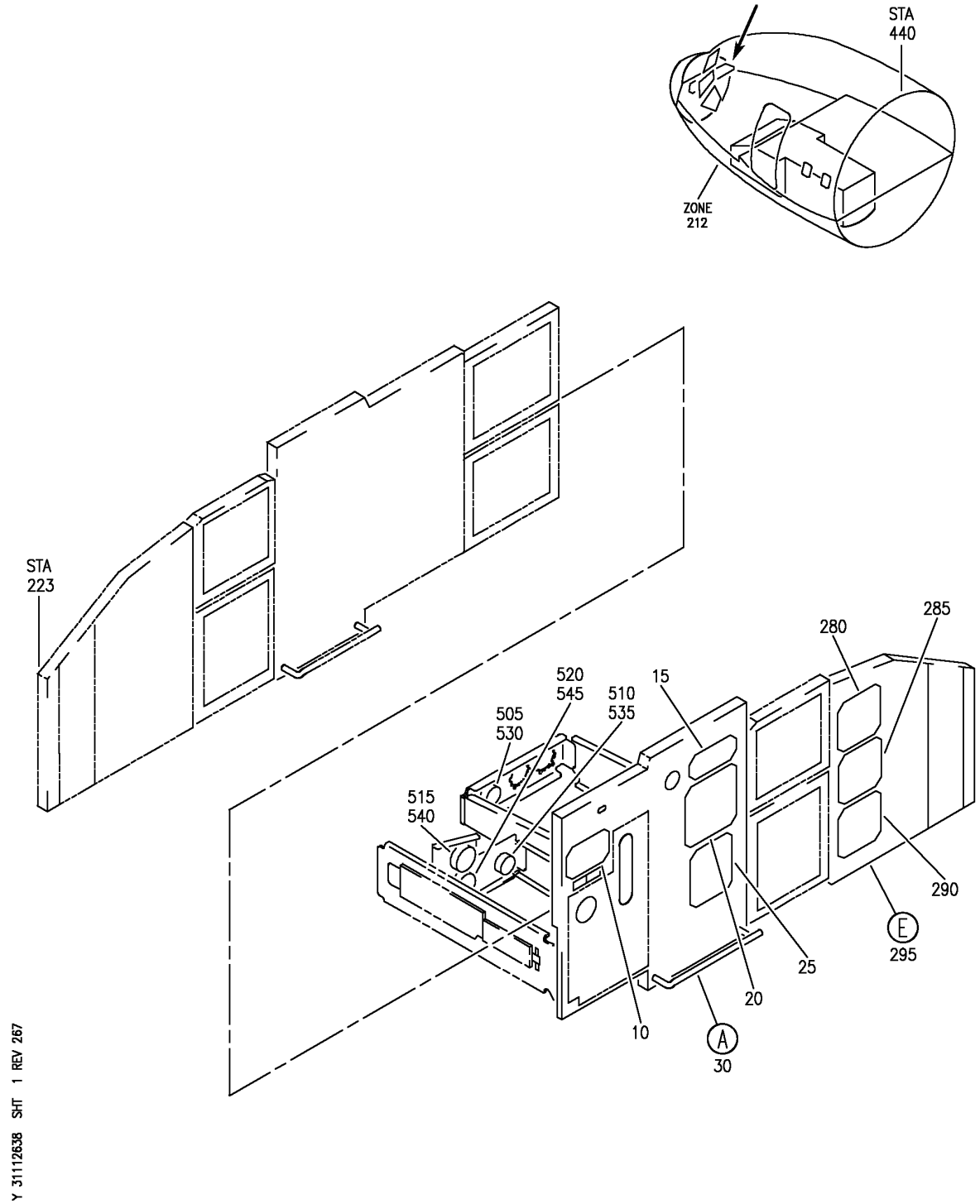

PANEL INSTL-P3-1 AND P3-3 (FIRST OFFICER'S INSTRUMENT PANEL ONLY)
FIGURE 38 (SHEET 1)

BOEING PROPRIETARY - Copyright © - Unpublished Work - See title page for details.

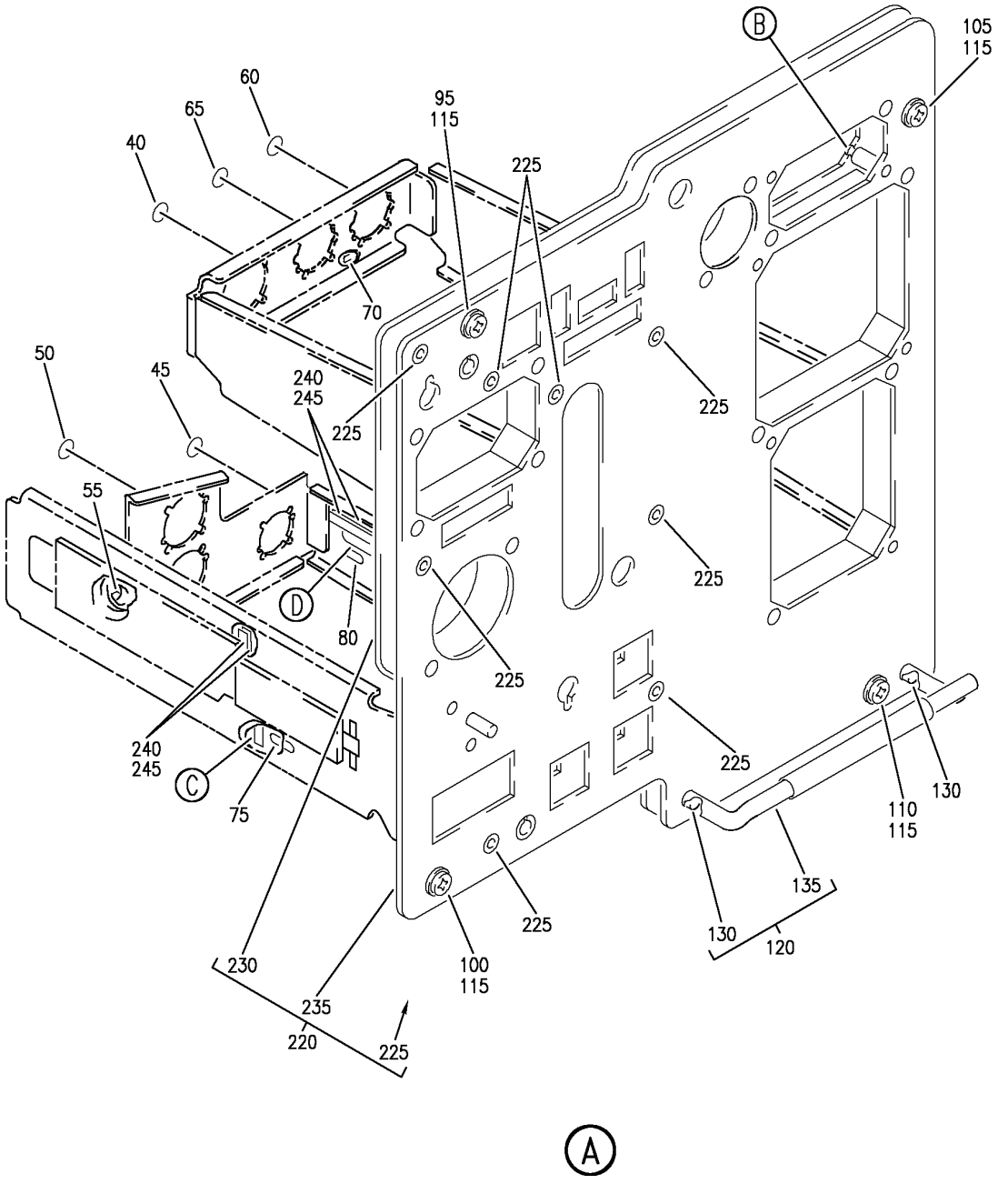

PANEL INSTL-P3-1 AND P3-3 (FIRST OFFICER'S INSTRUMENT PANEL ONLY)
FIGURE 38 (SHEET 2)

BOEING PROPRIETARY - Copyright © - Unpublished Work - See title page for details.

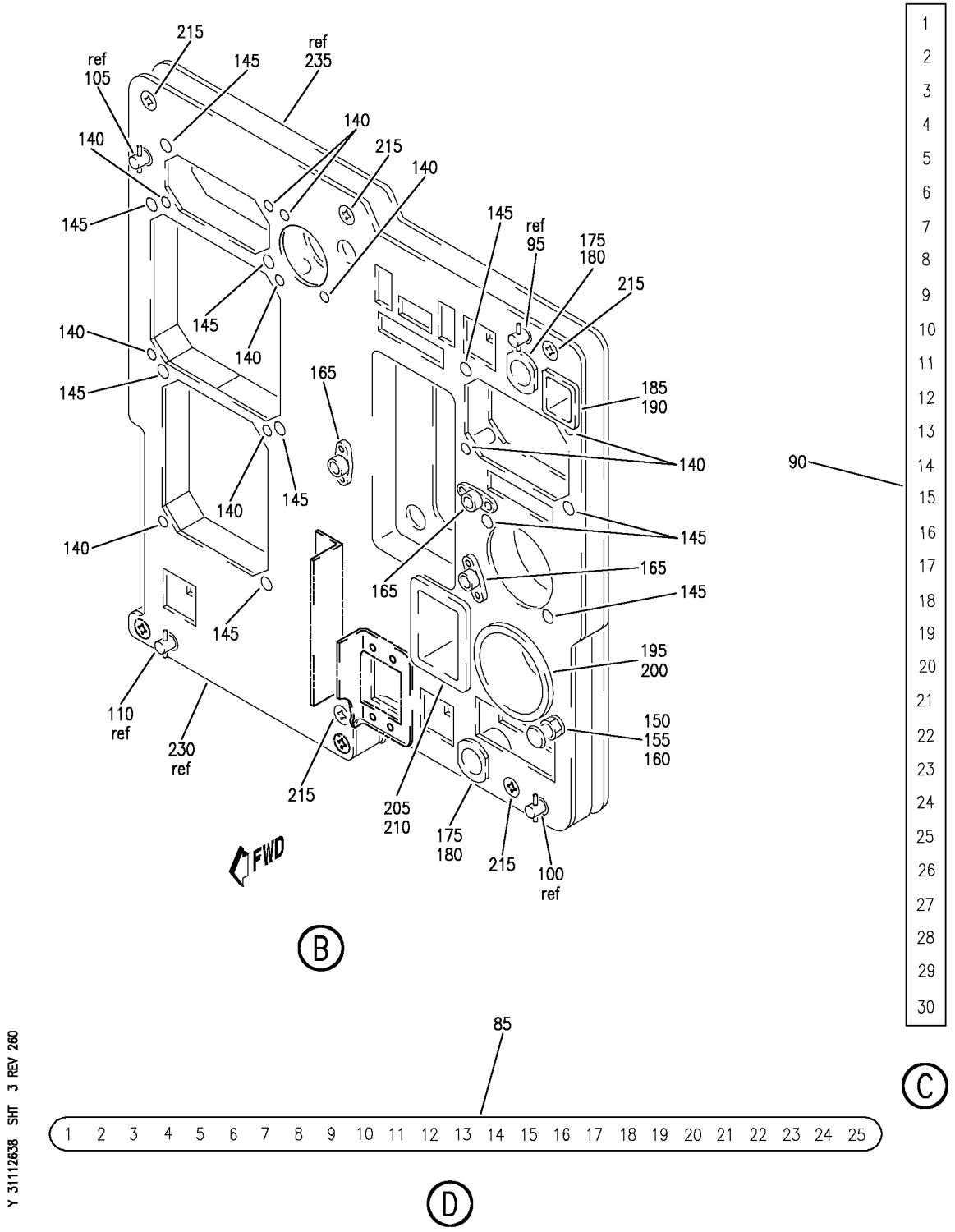

PANEL INSTL-P3-1 AND P3-3 (FIRST OFFICER'S INSTRUMENT PANEL ONLY)
FIGURE 38 (SHEET 3)

BOEING PROPRIETARY - Copyright © - Unpublished Work - See title page for details.

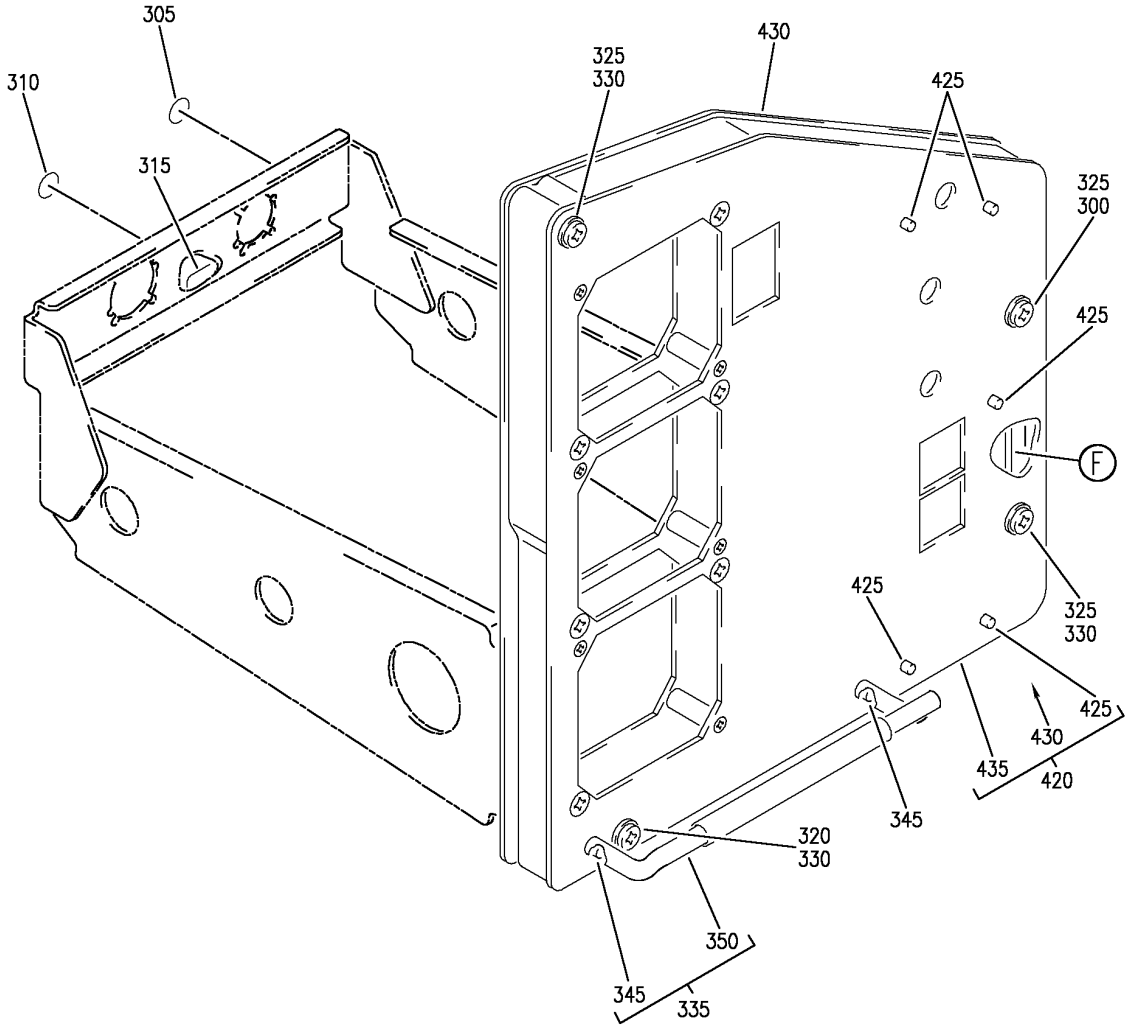

Y 31112638 SHT 4 REV 260

E

PANEL INSTL-P3-1 AND P3-3 (FIRST OFFICER'S INSTRUMENT PANEL ONLY)
FIGURE 38 (SHEET 4)

BOEING PROPRIETARY - Copyright © - Unpublished Work - See title page for details.

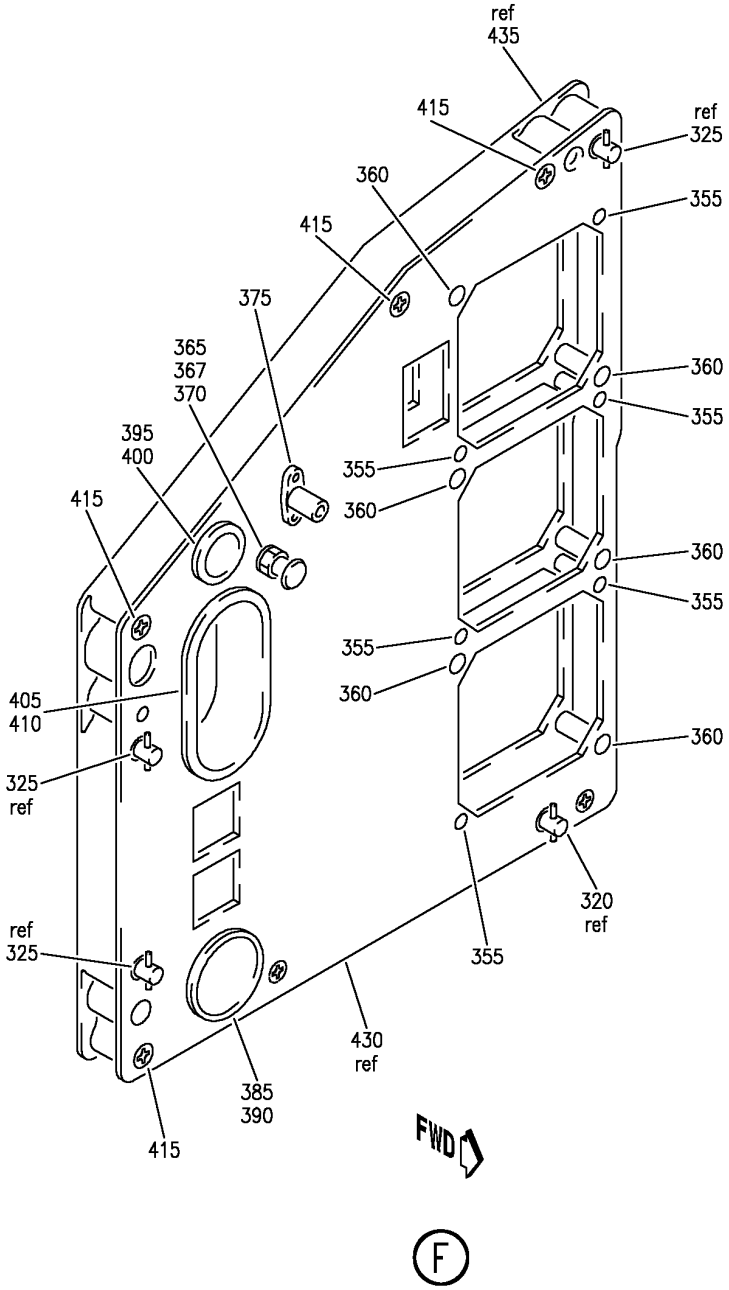

Y 31112638 SHT 5 REV 266

PANEL INSTL-P3-1 AND P3-3 (FIRST OFFICER'S INSTRUMENT PANEL ONLY)
FIGURE 38 (SHEET 5)

BOEING PROPRIETARY - Copyright © - Unpublished Work - See title page for details.

FIG ITEM	PART NUMBER	1 2 3 4 5 6 7 NOMENCLATURE	EFFECT FROM TO	UNITS PER ASSY
38		PANEL INSTL-P3-1 AND P3-3 (FIRST OFFICER'S INSTRUMENT PANEL ONLY)	103106	RF

MISSING ITEM NUMBERS NOT APPLICABLE

– ITEM NOT ILLUSTRATED

BOEING PROPRIETARY - Copyright © - Unpublished Work - See title page for details.

FIG ITEM	PART NUMBER	1 2 3 4 5 6 7 NOMENCLATURE	EFFECT FROM TO	UNITS PER ASSY
38				
- 1	MODREF31741	PANEL INSTL-P3-1 AND P3-3 (FIRST OFFICER'S INSTRUMENT PANEL ONLY) MODULE NUMBER: 233N2103-425 REV A FOR OTHER SYS DETAILS SEE: 11-31-01-38 22-11-02-03 22-14-01-03 22-31-02-01 22-34-51-02 26-17-51-05 27-51-57-03 27-58-00-02 27-81-00-01 29-21-55-02 31-25-01-03 31-41-52-02 31-51-52-02 32-35-52-03 32-41-52-02 32-42-55-03 32-46-00-01 32-61-51-03 33-13-57-01A 33-16-52-03 34-12-01-03 34-13-01-03 34-13-02-01 34-13-05-01 34-13-06-01 34-16-51-03 34-21-02-02 34-22-02-02 34-22-05-01A 34-22-06-01 34-24-01-03 34-32-00-02 34-46-51-02 34-51-02-02 34-57-00-01 34-61-01-07 34-61-02-02 77-41-01-01 79-33-51-05 FOR ADDITIONAL DETAILS SEE: 31-11-11-19 31-11-16-01	103105	1

MISSING ITEM NUMBERS NOT APPLICABLE

– ITEM NOT ILLUSTRATED

BOEING PROPRIETARY - Copyright © - Unpublished Work - See title page for details.

FIG ITEM	PART NUMBER	1 2 3 4 5 6 7 NOMENCLATURE	EFFECT FROM TO	UNITS PER ASSY
38				
- 1	MODREF104335	PANEL INSTL-P3-1 AND P3-3 (FIRST OFFICER'S INSTRUMENT PANEL ONLY) MODULE NUMBER: 233N2103-425 REV B FOR OTHER SYS DETAILS SEE: 11-31-01-38 22-11-02-03 22-14-01-03 22-31-02-01 22-34-51-02 26-17-51-05 27-51-57-03 27-58-00-02 27-81-00-01 29-21-55-02 31-25-01-03 31-41-52-02 31-51-52-02 32-35-52-03 32-41-52-02 32-42-55-03 32-46-00-01 32-61-51-03 33-13-57-01A 33-16-52-03 34-12-01-03 34-13-01-03 34-13-02-01 34-13-05-01 34-13-06-01 34-16-51-03 34-21-02-02 34-22-02-02 34-22-05-01A 34-22-06-01 34-24-01-03 34-32-00-02 34-46-51-02 34-51-02-02 34-57-00-01 34-61-01-07 34-61-02-02 77-41-01-01 79-33-51-05 FOR ADDITIONAL DETAILS SEE: 31-11-11-19 31-11-16-01	106106	1

MISSING ITEM NUMBERS NOT APPLICABLE

– ITEM NOT ILLUSTRATED

BOEING PROPRIETARY - Copyright © - Unpublished Work - See title page for details.

FIG ITEM	PART NUMBER	1 2 3 4 5 6 7 NOMENCLATURE	EFFECT FROM TO	UNITS PER ASSY
38				
10	143D6354G2	.PANEL ASSY-THRUST MODE SELECTOR SUPPLIER CODE: V89954 FUNCTIONAL DESCRIPTION: ALLOWS CREW TO SELECT THRUST LIMIT COMPUTATION MODES SPECIFICATION NUMBER: S241T200-154 ELECTRICAL EQUIP NUMBER: M10258 COMPONENT MAINT MANUAL REF: 22-31-24 FOR OTHER SYS DETAILS SEE: 22-31-02-01 33-13-57-01A	103106	RF
15	622-5374-002	.INDICATOR ASSY-AUTOLAND STATUS SUPPLIER CODE: V4V792 SPECIFICATION NUMBER: S241T120-1 ELECTRICAL EQUIP NUMBER: N00071 COMPONENT MAINT MANUAL REF: 22-14-70 FOR BREAKDOWN SEE: 22-14-01-03	103106	RF
20	4039891-906	.INDICATOR-MACH AIRSPEED SUPPLIER CODE: V58960 SPECIFICATION NUMBER: S231T100-4 ELECTRICAL EQUIP NUMBER: N00041 COMPONENT MAINT MANUAL REF: 34-13-09 FOR BREAKDOWN SEE: 34-13-02-01	103106	RF

MISSING ITEM NUMBERS NOT APPLICABLE

– ITEM NOT ILLUSTRATED

BOEING PROPRIETARY - Copyright © - Unpublished Work - See title page for details.

FIG ITEM	PART NUMBER	1 2 3 4 5 6 7 NOMENCLATURE	EFFECT FROM TO	UNITS PER ASSY
38				
25	622-5001-109	.INDICATOR ASSY-RDMI	103106	RF
		SUPPLIER CODE:		
		V4V792		
		POSITION DATA:		
		R		
		SPECIFICATION NUMBER:		
		S242T403-109		
		ELECTRICAL EQUIP NUMBER:		
		N00043		
		COMPONENT MAINT MANUAL REF:		
		34-22-73		
		QUALIFIED I/W DATA:		
		S242T403-107		
		(622-5001-107) RB		
		S242T403-109		
		(622-5001-109) WITH THE		
		INCORPORATION OF S/B		
		757-34-0018 AND VENDOR		
		S/B (ROCKWELL COLLINS)		
		RDM1 743-34-10(R1)		
		FOR BREAKDOWN SEE:		
		34-22-05-01A		
30	233N2222-379	.MODULE ASSY-P3-1	103106	1
		COMPONENT MAINT MANUAL REF:		
		31-11-49		
		FOR OTHER SYS DETAILS SEE:		
		22-14-01-03		
		22-31-02-01		
		26-17-51-05		
		27-51-57-03		
		27-58-00-02		
		27-81-00-01		
		32-35-52-03		
		32-41-52-02		
		32-46-00-01		
		32-61-51-03		
		33-13-57-01A		
		34-13-02-01		
		34-22-05-01A		
- 35	233N2222-153	..MODULE ASSY	103106	RF
40	BAC27NEL0187	...DECAL-	103106	1
		PLACARD CONTENT:		
		1		
45	BAC27NEL0188	...DECAL-	103106	1
		PLACARD CONTENT:		
		2		
50	BAC27NEL0189	...DECAL-	103106	1
		PLACARD CONTENT:		
		3		

MISSING ITEM NUMBERS NOT APPLICABLE

- ITEM NOT ILLUSTRATED

BOEING PROPRIETARY - Copyright © - Unpublished Work - See title page for details.

FIG ITEM	PART NUMBER	1 2 3 4 5 6 7 NOMENCLATURE	EFFECT FROM TO	UNITS PER ASSY
38				
55	BAC27NEL0190	...DECAL-	103106	1
		PLACARD CONTENT:		
		4		
60	BAC27NEL0191	...DECAL-	103106	1
		PLACARD CONTENT:		
		5		
65	BAC27NEL0192	...DECAL-	103106	1
		PLACARD CONTENT:		
		6		
70	BAC27NEL0340	...DECAL-	103106	1
		PLACARD CONTENT:		
		AP0301		
75	BAC27NFDE0093	...DECAL-	103106	1
		PLACARD CONTENT:		
		TB0070		
80	BAC27NFDE0094	...DECAL-	103106	1
		PLACARD CONTENT:		
		TB0071		
85	BAC27TEX8	...DECAL	103106	1
90	BAC27TEX0384	...DECAL	103106	1
95	BACS21EE37R	...STUD ASSY	103106	1
100	BACS21EE36R	...STUD ASSY	103106	1
105	BACS21EE35R	...STUD ASSY	103106	1
110	BACS21EE33R	...STUD ASSY	103106	1
115	1127700	...WASHER	103106	4
		SUPPLIER CODE:		
		V60119		
		SPECIFICATION NUMBER:		
		BACW10X4		
		OPTIONAL PART:		
		2600LW		
		V71286		
120	233T2218-6	...FOOTREST ASSY	103106	1
		ATTACHING PARTS		
- 125	MS24693C280	...SCREW	103106	2
		-------*-------		
130	MS21209F1-30	....INSERT	103106	2
135	233T2218-8	....FOOTREST	103106	1
140	012001-101	...SPACER-CRIMP	103106	10
		SUPPLIER CODE:		
		V28277		
145	350-1	...SPACER-	103106	10
		SUPPLIER CODE:		
		V28277		

MISSING ITEM NUMBERS NOT APPLICABLE

- ITEM NOT ILLUSTRATED

BOEING PROPRIETARY - Copyright © - Unpublished Work - See title page for details.

FIG ITEM	PART NUMBER	1 2 3 4 5 6 7 NOMENCLATURE	EFFECT FROM TO	UNITS PER ASSY
38				
150	VNS1924CA2-8	...STUD	103106	1
		SUPPLIER CODE:		
		V5M902		
		SPECIFICATION NUMBER:		
		BACS53B1EA2		
		OPTIONAL PART:		
		VNS1924CA3-2-8		
		V92215		
155	NAS1149D0316H	...WASHER	103106	1
160	PLH53CD	...NUT	103106	1
		SUPPLIER CODE:		
		VF0224		
		SPECIFICATION NUMBER:		
		BACN10YR3CD		
		OPTIONAL PART:		
		H52732-3CD		
		V15653		
165	WS1-4A6	...NUT	103106	3
		SUPPLIER CODE:		
		V04169		
		SPECIFICATION NUMBER:		
		BACN10TL3A6		
		ATTACHING PARTS		
- 170	BACR15BB4DC	...RIVET-	103106	6
		SIZE DETERMINED ON INSTL.		
		-------*-------		
175	233T2220-10	...CUP ASSY	103106	2
180	233T2220-12	....SEAL	103106	1
185	233T2220-30	...CUP ASSY	103106	1
190	233T2220-32	....SEAL	103106	1
195	233T2220-24	...CUP ASSY	103106	1
200	233T2220-26	....SEAL	103106	1
205	233T2220-19	...CUP ASSY	103106	1
210	233T2220-21	....SEAL	103106	1
215	MS24693C50	...SCREW	103106	5
220	233N2226-182	...PANEL ASSY-FWD	103106	1
225	GR1003	....NUT-INSERT	103106	8
		SUPPLIER CODE:		
		V0625B		
		OPTIONAL PART:		
		NAS1330A06K106		
225	NAS1330A06K106	....NUT-	103106	8
		OPTIONAL PART:		
		GR1003		
		V0625B		
230	233N2226-139	....BACKPLATE	103106	1
235	233N2226-183	....FRAME-	103106	1
		ALTERED FROM PART NUMBER:		
		233N2230-1		

MISSING ITEM NUMBERS NOT APPLICABLE

- ITEM NOT ILLUSTRATED

BOEING PROPRIETARY - Copyright © - Unpublished Work - See title page for details.

FIG ITEM	PART NUMBER	1 2 3 4 5 6 7 NOMENCLATURE	EFFECT FROM TO	UNITS PER ASSY
38				
240	H49-1	...CLAMP SUPPLIER CODE: V34941 SPECIFICATION NUMBER: BACC49A1A OPTIONAL PART: MF104-1 V6E102	103106	4
245	H21-1	...SPACER SUPPLIER CODE: V34941 SPECIFICATION NUMBER: BACS18AR1 OPTIONAL PART: FAB276A V15805 YHLZ1C2 V09922	103106	2
280	4039892-904	.INDICATOR ASSY-ALTM SUPPLIER CODE: V58960 SPECIFICATION NUMBER: S231T101-1 ELECTRICAL EQUIP NUMBER: N00048 COMPONENT MAINT MANUAL REF: 34-13-08 FOR BREAKDOWN SEE: 34-13-01-03	103106	RF
285	4039893-902	.INDICATOR-VERT SPEED SUPPLIER CODE: V58960 POSITION DATA: R SPECIFICATION NUMBER: S231T102-1 ELECTRICAL EQUIP NUMBER: N00049 COMPONENT MAINT MANUAL REF: 34-13-07 FOR BREAKDOWN SEE: 34-22-06-01	103106	RF

MISSING ITEM NUMBERS NOT APPLICABLE

– ITEM NOT ILLUSTRATED

BOEING PROPRIETARY - Copyright © - Unpublished Work - See title page for details.

	FIG ITEM	PART NUMBER	1 2 3 4 5 6 7 NOMENCLATURE	EFFECT FROM TO	UNITS PER ASSY
	38				
R	290	2610-08-1	.CLOCK ASSY-	103106	RF
R			SUPPLIER CODE:		
R			V52013		
R			FUNCTIONAL DESCRIPTION:		
R			DIGITAL ELECTRONIC		
R			CHRONOMETER, SHOWS		
R			ELAPSED TIME,		
R			CHRONOGRAPH TIME, DATE		
R			AND GREENWICH MEAN TIME.		
R			SPECIFICATION NUMBER:		
R			60B00303-107		
R			ELECTRICAL EQUIP NUMBER:		
R			N00042		
R			COMPONENT MAINT MANUAL REF:		
R			31-21-08		
R			QUALIFIED I/W DATA:		
R			2610-08-1(60B00303-107)		
R			I/W		
R			65806-002-1(S231T120-1)		
R			IN SHIPSETS, FOR ALL FMC		
R			EXCEPT S242T102-451 WITH		
R			S/W PS4052970-95X, WHERE		
R			X CAN BE ANY VALUE, AND		
R			S242T102-455.		
R			65807-050-1 AND		
R			2610-08-1 ARE		
R			INTERCHANGEABLE AS A		
R			SET ONLY		
R			FOR BREAKDOWN SEE:		
R			31-25-01-03		
	295	233N2223-337	.MODULE ASSY-P3-3	103106	1
			COMPONENT MAINT MANUAL REF:		
			31-11-50		
			FOR OTHER SYS DETAILS SEE:		
			31-25-01-03		
			33-13-57-01A		
			34-12-01-03		
			34-13-01-03		
			34-21-02-02		
			34-22-02-02		
			34-22-06-01		
			34-32-00-02		
			34-57-00-01		
			34-61-02-02		
-	300	233N2223-62	..MODULE ASSY	103106	RF
	305	BAC27NEL0187	...DECAL-	103106	1
			PLACARD CONTENT:		
			1		

MISSING ITEM NUMBERS NOT APPLICABLE

- ITEM NOT ILLUSTRATED

BOEING PROPRIETARY - Copyright © - Unpublished Work - See title page for details.

FIG ITEM	PART NUMBER	1 2 3 4 5 6 7 NOMENCLATURE	EFFECT FROM TO	UNITS PER ASSY
38				
310	BAC27NEL0188	...DECAL-	103106	1
		PLACARD CONTENT:		
		2		
315	BAC27NEL0341	...DECAL-	103106	1
		PLACARD CONTENT:		
		AP0303		
320	BACS21EE33R	...STUD ASSY	103106	1
325	BACS21EE34R	...STUD ASSY	103106	3
330	1127700	...WASHER	103106	4
		SUPPLIER CODE:		
		V60119		
		SPECIFICATION NUMBER:		
		BACW10X4		
		OPTIONAL PART:		
		2600LW		
		V71286		
335	233T2218-2	...FOOTREST ASSY	103106	1
		ATTACHING PARTS		
- 340	MS24693C280	...SCREW	103106	2
		-------*-------		
345	MS21209F1-30	....INSERT	103106	2
350	233T2218-4	....FOOTREST	103106	1
355	012001-101	...SPACER-CRIMP	103106	6
		SUPPLIER CODE:		
		V28277		
360	350-1	...SPACER-	103106	6
		SUPPLIER CODE:		
		V28277		
365	VNS1924CA2-8	...STUD	103106	1
		SUPPLIER CODE:		
		V5M902		
		SPECIFICATION NUMBER:		
		BACS53B1EA2		
		OPTIONAL PART:		
		VNS1924CA3-2-8		
		V92215		
367	NAS1149D0316H	...WASHER	103106	1
370	PLH53C	...NUT	103106	1
		SUPPLIER CODE:		
		V62554		
		SPECIFICATION NUMBER:		
		BACN10YR3C		
		OPTIONAL PART:		
		H52732-3C		
		V15653		

MISSING ITEM NUMBERS NOT APPLICABLE

- ITEM NOT ILLUSTRATED

BOEING PROPRIETARY - Copyright © - Unpublished Work - See title page for details.

FIG ITEM	PART NUMBER	1 2 3 4 5 6 7 NOMENCLATURE	EFFECT FROM TO	UNITS PER ASSY
38				
375	WSI4-22	...NUT	103106	1
		SUPPLIER CODE:		
		V04169		
		SPECIFICATION NUMBER:		
		BACN10TL3-22		
		ATTACHING PARTS		
- 380	BACR15BB3AD	...RIVET-	103106	2
		SIZE DETERMINED ON INSTL.		
		-------*-------		
385	233T2220-1	...CUP ASSY	103106	1
390	233T2220-3	....SEAL	103106	1
395	233T2220-4	...CUP ASSY	103106	1
400	233T2220-6	....SEAL	103106	1
405	233T2220-33	...CUP ASSY	103106	1
410	233T2220-35	....SEAL	103106	1
415	MS24693C50	...SCREW	103106	4
420	233N2227-59	...PANEL ASSY-FWD	103106	1
425	GR1003	....NUT-INSERT	103106	5
		SUPPLIER CODE:		
		V0625B		
		OPTIONAL PART:		
		NAS1330A06K106		
425	NAS1330A06K106	....NUT-	103106	5
		OPTIONAL PART:		
		GR1003		
		V0625B		
430	233N2227-30	....BACKPLATE-	103106	1
		ALTERED FROM PART NUMBER:		
		233N2243-1		
		V89954		
435	233N2227-60	....FRAME ASSY-	103106	1
		ALTERED FROM PART NUMBER:		
		233N2231-1		
		V89954		
- 500	286N0004-601	WIRE BUNDLE ASSY	103106	1
505	BACC45FN12A12P9	.RECEPTACLE-	103106	1
		ELECTRICAL EQUIP NUMBER:		
		D40832J		
		WIRING DIAGRAM REF:		
		344611		
510	BACC45FN14-15P6	.CONNECTOR-	103106	1
		ELECTRICAL EQUIP NUMBER:		
		D42174J		
		WIRING DIAGRAM REF:		
		323511		

MISSING ITEM NUMBERS NOT APPLICABLE

- ITEM NOT ILLUSTRATED

BOEING PROPRIETARY - Copyright © - Unpublished Work - See title page for details.

FIG ITEM	PART NUMBER	1 2 3 4 5 6 7 NOMENCLATURE	EFFECT FROM TO	UNITS PER ASSY
38				
515	BACC45FN22-55P8	.RECEPTACLE-	103106	1
		ELECTRICAL EQUIP NUMBER:		
		D40834J		
		WIRING DIAGRAM REF:		
		323111		
520	BACC45FN22-55P	.CONNECTOR-	103106	1
		ELECTRICAL EQUIP NUMBER:		
		D40836J		
		WIRING DIAGRAM REF:		
		326112		
- 525	286N0003-601	WIRE BUNDLE ASSY	103106	RF
530	BACC45FT12A12S9	.CONNECTOR-	103106	1
		ELECTRICAL EQUIP NUMBER:		
		D40832P		
		WIRING DIAGRAM REF:		
		344611		
535	BACC45FT14D15S6	.CONNECTOR-	103106	1
		ELECTRICAL EQUIP NUMBER:		
		D42174P		
		WIRING DIAGRAM REF:		
		323511		
540	BACC45FT22D55S8	.PLUG-	103106	1
		ELECTRICAL EQUIP NUMBER:		
		D40834P		
		WIRING DIAGRAM REF:		
		223112		
545	BACC45FT22D55S	.CONNECTOR-	103106	1
		ELECTRICAL EQUIP NUMBER:		
		D40836P		
		WIRING DIAGRAM REF:		
		223211		

MISSING ITEM NUMBERS NOT APPLICABLE

- ITEM NOT ILLUSTRATED

BOEING PROPRIETARY - Copyright © - Unpublished Work - See title page for details.

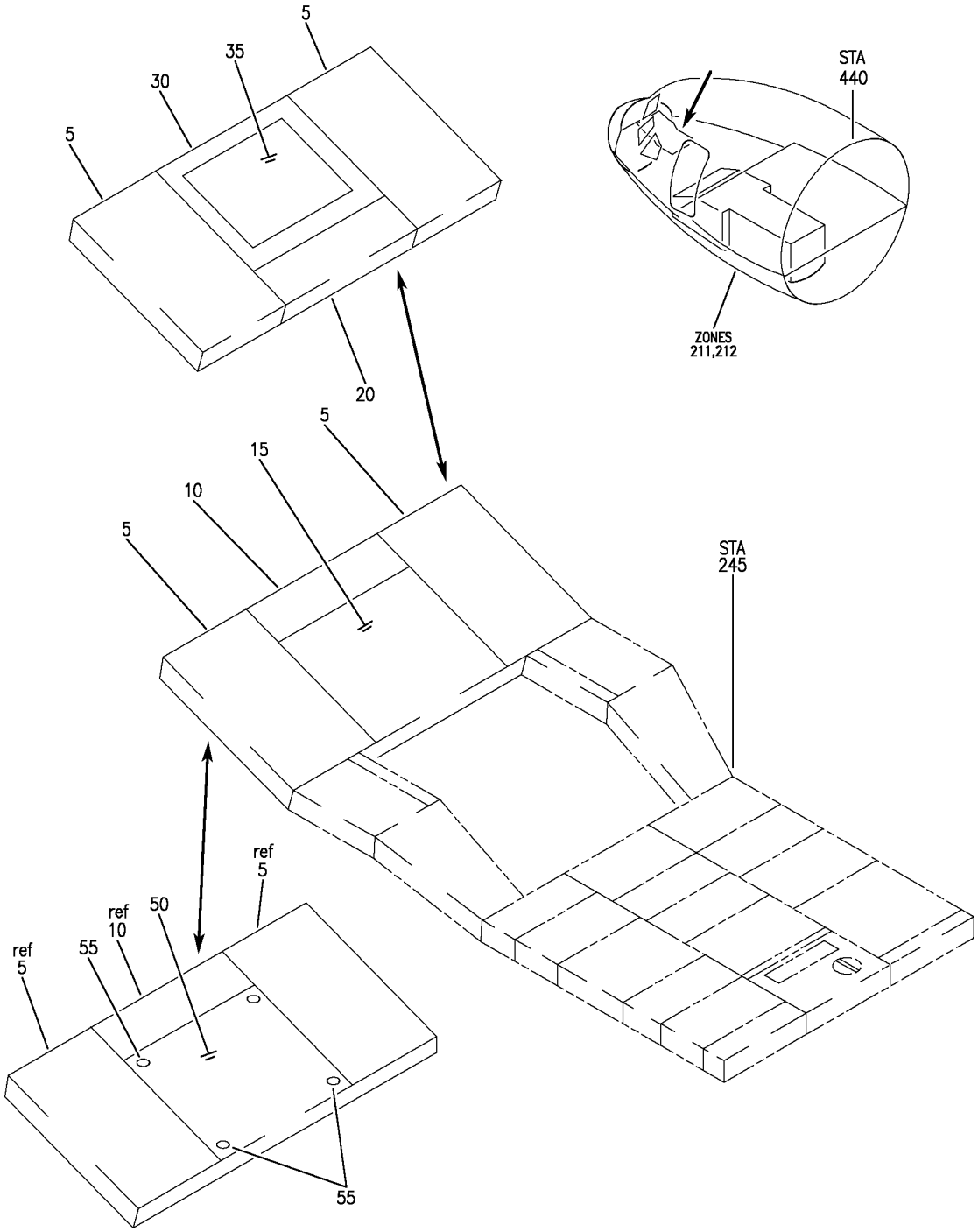

PANEL INSTL-FWD P9 ELECTRONICS (INDICATING/RECORDING ONLY)
FIGURE 1

BOEING PROPRIETARY - Copyright © - Unpublished Work - See title page for details.

FIG ITEM	PART NUMBER	1 2 3 4 5 6 7 NOMENCLATURE	EFFECT FROM TO	UNITS PER ASSY
1		PANEL INSTL-FWD P9 ELECTRONICS (INDICATING/RECORDING ONLY)	002004 006100 107107 121503 904999	
- 1	233N6101-1	PANEL INSTL-P9 ELECTRONICS (INDICATING/RECORDING ONLY) POSITION DATA: FWD VARIABLE DRAWING REF: 233N6101-5004 233N6101-5028 233N6101-5041 233N6101-5042 233N6101-5046 FOR NHA/OTHER SYS DET SEE: 25-10-00-05A	002004 006100 107107 121503 904999	RF
5	4038170-905	.PANEL ASSY-FLIGHT MANAGEMENT COMPUTER CONT SUPPLIER CODE: V58960 SPECIFICATION NUMBER: S242T102-103 ELECTRICAL EQUIP NUMBER: M00076 M00077 COMPONENT MAINT MANUAL REF: 34-61-20 PRE SERVICE BULLETIN: 34-0414 34-0416 POST SERVICE BULLETIN: 4038170-34-SW1 V13604 FOR BREAKDOWN SEE: 34-61-02-01	002004 006100 107107 121503 904999	RF

MISSING ITEM NUMBERS NOT APPLICABLE

- ITEM NOT ILLUSTRATED

BOEING PROPRIETARY - Copyright © - Unpublished Work - See title page for details.

FIG ITEM	PART NUMBER	1 2 3 4 5 6 7 NOMENCLATURE	EFFECT FROM TO	UNITS PER ASSY
1				
5	4038170-904	.PANEL ASSY-FLIGHT MANAGEMENT COMPUTER CONT SUPPLIER CODE: V58960 SPECIFICATION NUMBER: S242T102-102 ELECTRICAL EQUIP NUMBER: M00076 M00077 COMPONENT MAINT MANUAL REF: 34-61-20 PRE SERVICE BULLETIN: 34-0414 34-0416 FOR BREAKDOWN SEE: 34-61-02-01	002004 006100 107107 121503 904999	RF
R 5	4077880-908	.PANEL ASSY-FLIGHT MANAGEMENT CDU SUPPLIER CODE: V58960 FUNCTIONAL DESCRIPTION: OPERATE CONTROL PANEL FOR SUBSYSTEMS AND PROVIDE BACKUP FUNCTIONS FOR NAVIGATION, FLIGHT PLANNING, RADIO TUNING AND EFIS/EICAS PANEL CONTROL SPECIFICATION NUMBER: S242T102-161 ELECTRICAL EQUIP NUMBER: M00076 M00077 COMPONENT MAINT MANUAL REF: 34-61-57 POST SERVICE BULLETIN: 34-0414 34-0416 FOR BREAKDOWN SEE: 34-61-02-01	009009 107107	RF

MISSING ITEM NUMBERS NOT APPLICABLE

– ITEM NOT ILLUSTRATED

BOEING PROPRIETARY - Copyright © - Unpublished Work - See title page for details.

FIG ITEM	PART NUMBER	1 2 3 4 5 6 7 NOMENCLATURE	EFFECT FROM TO	UNITS PER ASSY
1				
10	622-6089-102	.PANEL ASSY-ENG INDICATING AND CREW ALERTING SYS CONT SUPPLIER CODE: V4V792 FUNCTIONAL DESCRIPTION: PROVIDES ANALOG AND DIGITAL MODE/CONTROL SIGNALS TO THE EICAS COMPUTER AND DISPLAY UNITS SPECIFICATION NUMBER: S242N701-206 ELECTRICAL EQUIP NUMBER: M10195 COMPONENT MAINT MANUAL REF: 31-41-75 FOR BREAKDOWN SEE: 31-41-03-01	002004 006100 107107 121503 904999	RF
10	622-6089-101	.PANEL ASSY-ENG INDICATING AND CREW ALERTING SYS CONT SUPPLIER CODE: V4V792 SPECIFICATION NUMBER: S242N701-205 ELECTRICAL EQUIP NUMBER: M10195 COMPONENT MAINT MANUAL REF: 31-41-75 FOR BREAKDOWN SEE: 31-41-03-01	002004 006100 107107 121503 904999	RF
R R R R R R R 15	2041222-2454	.PANEL-WEATHER RDR IND SUPPLIER CODE: V27914 ELECTRICAL EQUIP NUMBER: N00110 COMPONENT MAINT MANUAL REF: 34-41-23	950951	RF

MISSING ITEM NUMBERS NOT APPLICABLE

— ITEM NOT ILLUSTRATED

BOEING PROPRIETARY - Copyright © - Unpublished Work - See title page for details.

FIG ITEM	PART NUMBER	1 2 3 4 5 6 7 NOMENCLATURE	EFFECT FROM TO	UNITS PER ASSY
1				
15	2041222-0403	.PANEL-WEATHER RDR IND CONT SUPPLIER CODE: V97896 SPECIFICATION NUMBER: S220T109-301 ELECTRICAL EQUIP NUMBER: N00110 COMPONENT MAINT MANUAL REF: 34-41-22 PRE SERVICE BULLETIN: 34-0394	107107	RF
50	233N2310-7	.PLATE-TOP POST SERVICE BULLETIN: 34-0394 ATTACHING PARTS	107107	1
55	PS10F8DL12BN	.SCREW- SUPPLIER CODE: V12324 SERVICE BULLETIN OPT DATA: NAS623-3-5	107107	4
55	NAS623-3-5	.SCREW- SERVICE BULLETIN OPT DATA: PS10F8DL12BN V12324 -------*-------	107107	4

MISSING ITEM NUMBERS NOT APPLICABLE

– ITEM NOT ILLUSTRATED

BOEING PROPRIETARY - Copyright © - Unpublished Work - See title page for details.

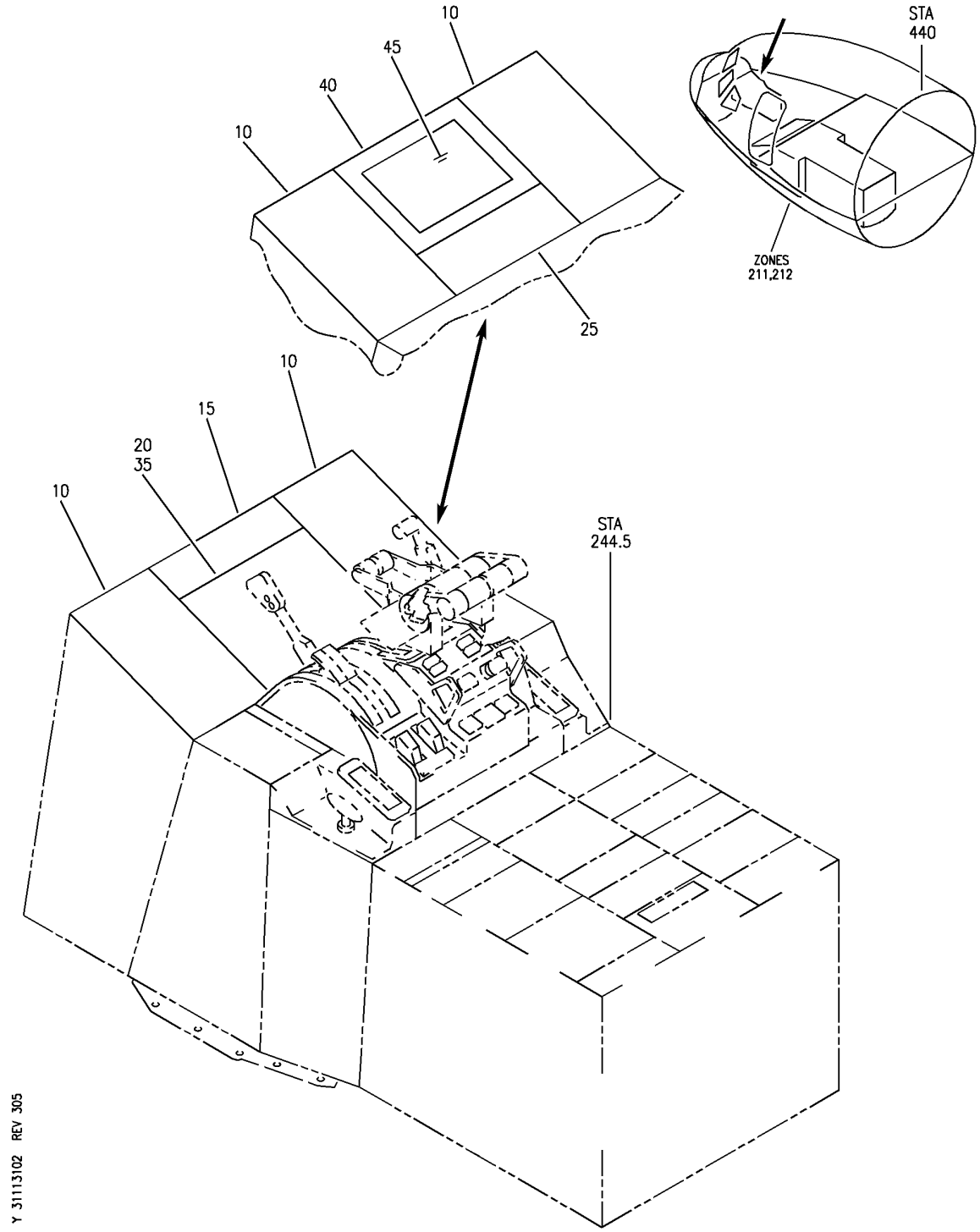

PANEL INSTL-P9 ELECTRONICS (CONTROL STAND FORWARD ELECTRONIC PANEL ONLY)
FIGURE 2

BOEING PROPRIETARY - Copyright © - Unpublished Work - See title page for details.

FIG ITEM	PART NUMBER	1 2 3 4 5 6 7 NOMENCLATURE	EFFECT FROM TO	UNITS PER ASSY
2		PANEL INSTL-P9 ELECTRONICS (CONTROL STAND FORWARD ELECTRONIC PANEL ONLY)	101106 108120 504903	
- 2	233N6103-28	PANEL INSTL-P9 ELECTRONICS (CONTROL STAND FORWARD ELECTRONIC PANEL ONLY) FOR NHA/OTHER SYS DET SEE: 25-10-00-15B	101101	RF
- 2	233N6103-128	PANEL INSTL-P9 ELECTRONICS (CONTROL STAND FORWARD ELECTRONIC PANEL ONLY) FOR NHA/OTHER SYS DET SEE: 25-10-00-15B	102102	RF
- 4	233N6103-122	PANEL INSTL-P9 ELECTRONICS (CONTROL STAND FORWARD ELECTRONIC PANEL ONLY) FOR NHA/OTHER SYS DET SEE: 25-10-00-15B	504903	RF
- 6	233N6103-62	PANEL INSTL-P9 ELECTRONICS (CONTROL STAND FORWARD ELECTRONIC PANEL ONLY) FOR NHA/OTHER SYS DET SEE: 25-10-00-15B	108120	RF

MISSING ITEM NUMBERS NOT APPLICABLE

- ITEM NOT ILLUSTRATED

BOEING PROPRIETARY - Copyright © - Unpublished Work - See title page for details.

FIG ITEM	PART NUMBER	1 2 3 4 5 6 7 NOMENCLATURE	EFFECT FROM TO	UNITS PER ASSY
2				
- 7	MODREF33990	PANEL INSTL-P9 ELECTRONICS (CONTROL STAND FORWARD ELECTRONIC PANEL ONLY) MODULE NUMBER: 233N6103-253 REV B FOR OTHER SYS DETAILS SEE: 11-31-05-66F 23-12-02-03 23-51-01-05 26-11-02-01 26-11-54-02A 26-12-51-03 26-17-51-06 26-21-01-02 26-22-03-03 26-23-52-04A 27-11-23-03 27-21-23-03 27-28-02-01A 31-41-03-02 33-13-01-07 34-22-02-03 34-31-02-02 34-43-02-02 34-53-02-02 34-57-02-03 34-61-02-03 FOR ADDITIONAL DETAILS SEE: 31-11-36-78 31-11-41-02	103106	1

MISSING ITEM NUMBERS NOT APPLICABLE

- ITEM NOT ILLUSTRATED

BOEING PROPRIETARY - Copyright © - Unpublished Work - See title page for details.

FIG ITEM	PART NUMBER	1 2 3 4 5 6 7 NOMENCLATURE	EFFECT FROM TO	UNITS PER ASSY
2				
10	4077880-902	.PANEL ASSY-FLIGHT MANAGEMENT CDU SUPPLIER CODE: V58960 FUNCTIONAL DESCRIPTION: OPERATE CONTROL PANEL FOR SUBSYSTEMS AND PROVIDE BACKUP FUNCTIONS FOR NAVIGATION, FLIGHT PLANNING, RADIO TUNING AND EFIS/EICAS PANEL CONTROL SPECIFICATION NUMBER: S242T102-155 ELECTRICAL EQUIP NUMBER: M00076 M00077 COMPONENT MAINT MANUAL REF: 34-61-57 FOR BREAKDOWN SEE: 34-61-02-03	101101	RF
10	4077880-903	.PANEL ASSY-FLIGHT MANAGEMENT CDU SUPPLIER CODE: V58960 FUNCTIONAL DESCRIPTION: OPERATE CONTROL PANEL FOR SUBSYSTEMS AND PROVIDE BACKUP FUNCTIONS FOR NAVIGATION, FLIGHT PLANNING, RADIO TUNING AND EFIS/EICAS PANEL CONTROL SPECIFICATION NUMBER: S242T102-156 ELECTRICAL EQUIP NUMBER: M00076 M00077 COMPONENT MAINT MANUAL REF: 34-61-57 FOR BREAKDOWN SEE: 34-61-02-03	101106 108120 504903	RF

MISSING ITEM NUMBERS NOT APPLICABLE

– ITEM NOT ILLUSTRATED

BOEING PROPRIETARY - Copyright © - Unpublished Work - See title page for details.

FIG ITEM	PART NUMBER	1 2 3 4 5 6 7 NOMENCLATURE	EFFECT FROM TO	UNITS PER ASSY
2				
10	4058650-950	.PANEL ASSY-FLIGHT MANAGEMENT CDU SUPPLIER CODE: V58960 FUNCTIONAL DESCRIPTION: OPERATE CONTROL PANEL FOR SUBSYSTEMS AND PROVIDE BACKUP FUNCTIONS FOR NAVIGATION, FLIGHT PLANNING, RADIO TUNING AND EFIS/EICAS PANEL CONTROL SPECIFICATION NUMBER: S242T102-153 ELECTRICAL EQUIP NUMBER: M00076 M00077 COMPONENT MAINT MANUAL REF: 34-61-37 FOR BREAKDOWN SEE: 34-61-02-03	101106 108120 504903	RF
10	4077880-908	.PANEL ASSY-FLIGHT MANAGEMENT CDU SUPPLIER CODE: V58960 FUNCTIONAL DESCRIPTION: OPERATE CONTROL PANEL FOR SUBSYSTEMS AND PROVIDE BACKUP FUNCTIONS FOR NAVIGATION, FLIGHT PLANNING, RADIO TUNING AND EFIS/EICAS PANEL CONTROL SPECIFICATION NUMBER: S242T102-161 ELECTRICAL EQUIP NUMBER: M00076 M00077 COMPONENT MAINT MANUAL REF: 34-61-58 FOR BREAKDOWN SEE: 34-61-02-03	101106 108120 504903	RF

MISSING ITEM NUMBERS NOT APPLICABLE

– ITEM NOT ILLUSTRATED

BOEING PROPRIETARY - Copyright © - Unpublished Work - See title page for details.

FIG ITEM	PART NUMBER	1 2 3 4 5 6 7 NOMENCLATURE	EFFECT FROM TO	UNITS PER ASSY
2				
15	622-6089-102	.PANEL ASSY-ENG INDICATING AND CREW ALERTING SYS DISPLAY SELECTOR SUPPLIER CODE: V4V792 FUNCTIONAL DESCRIPTION: PROVIDES ANALOG AND DIGITAL MODE/CONTROL SIGNALS TO THE EICAS COMPUTER AND DISPLAY UNITS SPECIFICATION NUMBER: S242N701-206 ELECTRICAL EQUIP NUMBER: M10195 COMPONENT MAINT MANUAL REF: 31-41-75 FOR BREAKDOWN SEE: 31-41-03-02	101106 108120 504903	RF
15	622-6089-101	.PANEL ASSY-ENG INDICATING AND CREW ALERTING SYS DISPLAY SELECTOR SUPPLIER CODE: V4V792 SPECIFICATION NUMBER: S242N701-205 ELECTRICAL EQUIP NUMBER: M10195 COMPONENT MAINT MANUAL REF: 31-41-75 FOR BREAKDOWN SEE: 31-41-03-02	101106 108120 504903	RF

MISSING ITEM NUMBERS NOT APPLICABLE

– ITEM NOT ILLUSTRATED

BOEING PROPRIETARY - Copyright © - Unpublished Work - See title page for details.

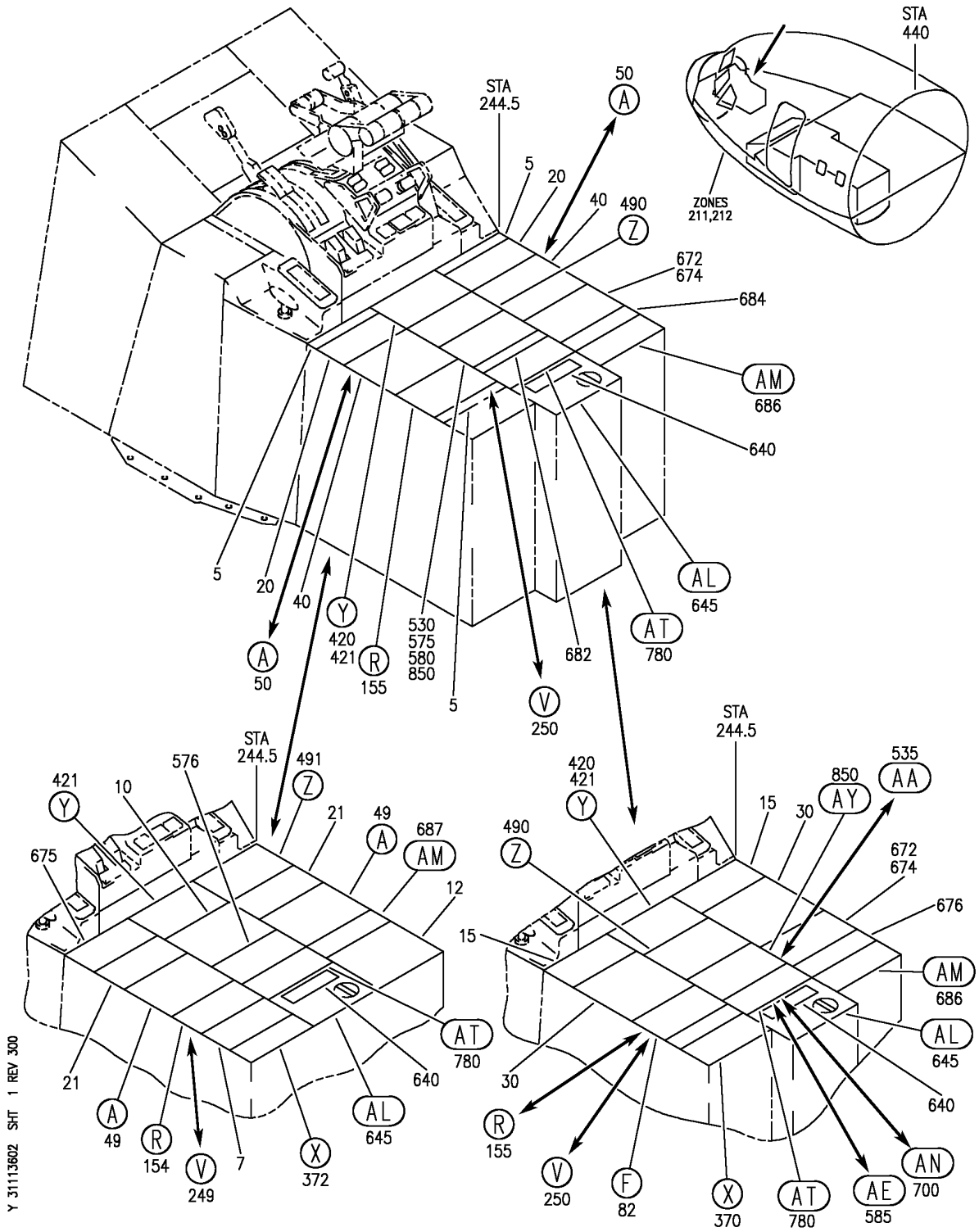

PANEL INSTL-P8 ELECTRONICS (CONTROL STAND AFT ELECTRONIC PANEL ONLY)
FIGURE 2 (SHEET 1)

BOEING PROPRIETARY - Copyright © - Unpublished Work - See title page for details.

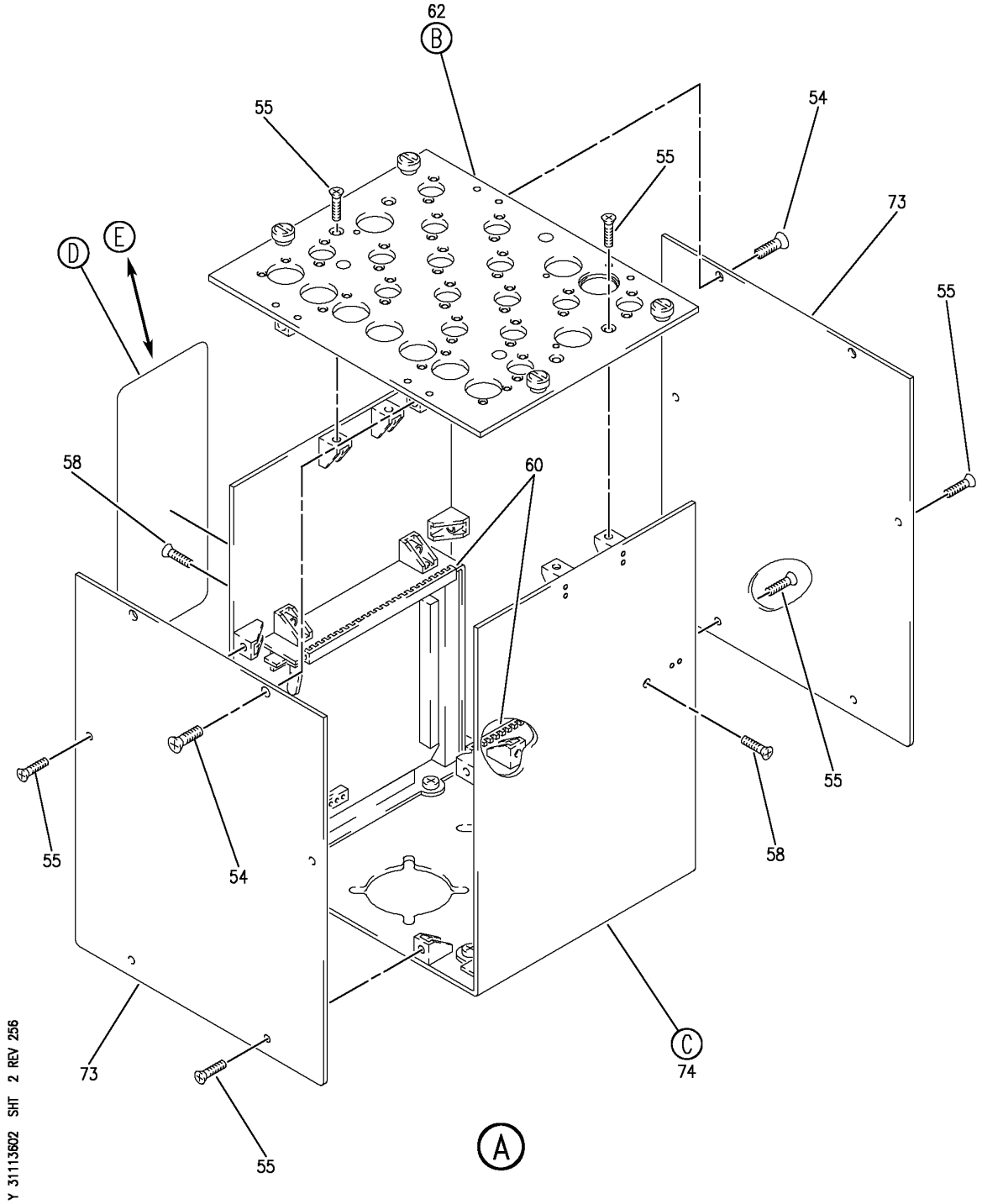

PANEL INSTL-P8 ELECTRONICS (CONTROL STAND AFT ELECTRONIC PANEL ONLY)
FIGURE 2 (SHEET 2)

BOEING PROPRIETARY - Copyright © - Unpublished Work - See title page for details.

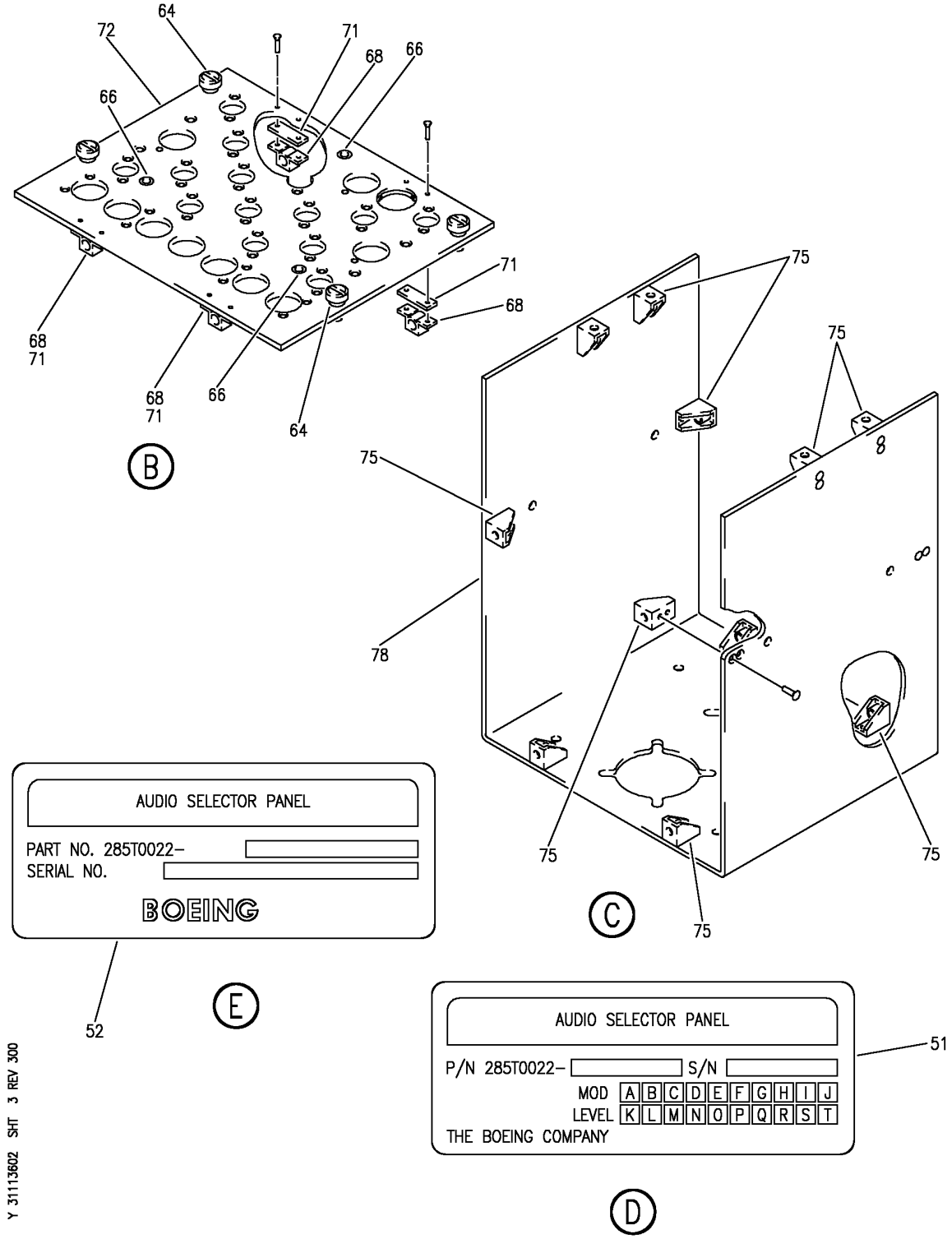

PANEL INSTL-P8 ELECTRONICS (CONTROL STAND AFT ELECTRONIC PANEL ONLY)
FIGURE 2 (SHEET 3)

BOEING PROPRIETARY - Copyright © - Unpublished Work - See title page for details.

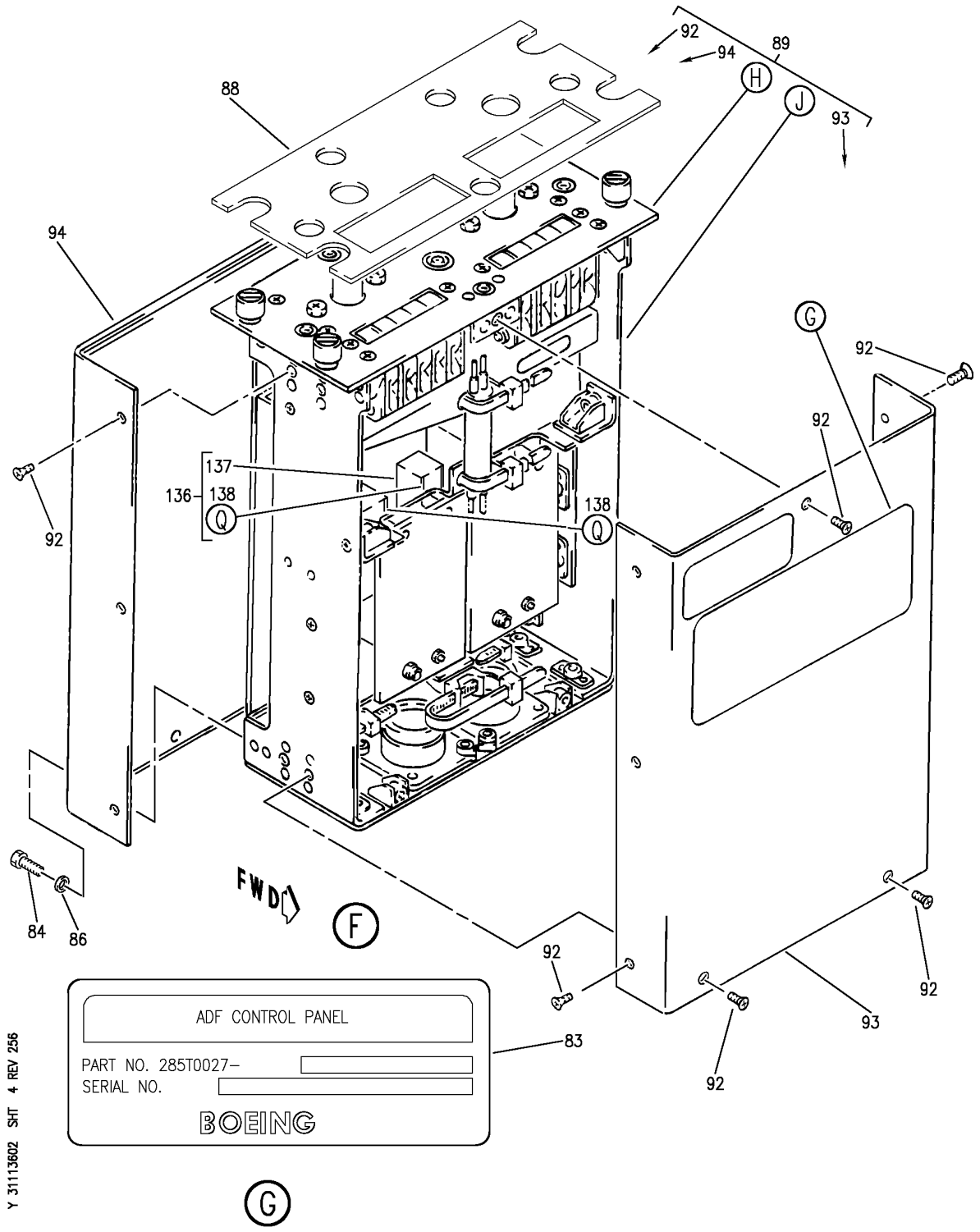

PANEL INSTL-P8 ELECTRONICS (CONTROL STAND AFT ELECTRONIC PANEL ONLY)
FIGURE 2 (SHEET 4)

BOEING PROPRIETARY - Copyright © - Unpublished Work - See title page for details.

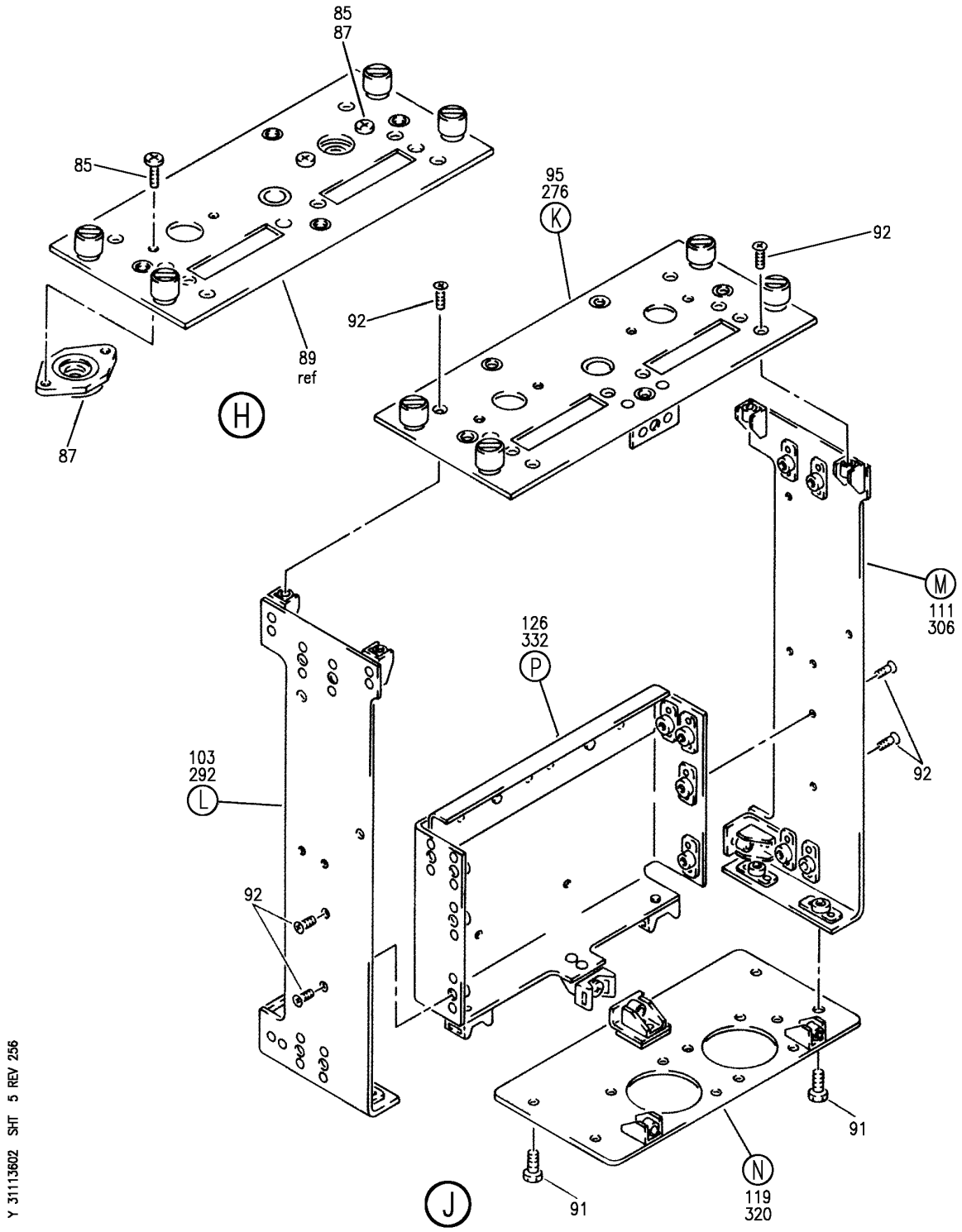

PANEL INSTL-P8 ELECTRONICS (CONTROL STAND AFT ELECTRONIC PANEL ONLY)
FIGURE 2 (SHEET 5)

BOEING PROPRIETARY - Copyright © - Unpublished Work - See title page for details.

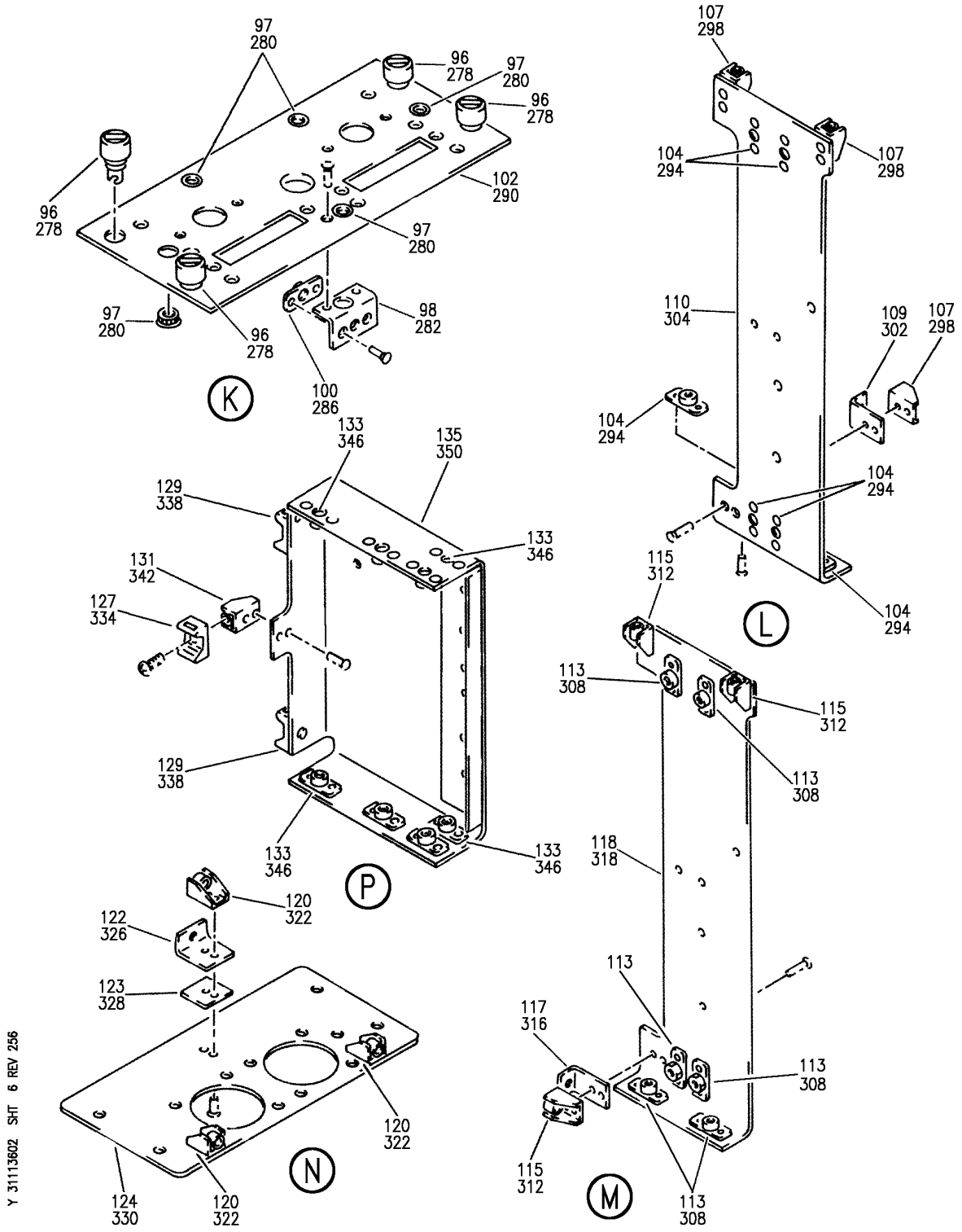

PANEL INSTL-P8 ELECTRONICS (CONTROL STAND AFT ELECTRONIC PANEL ONLY)
FIGURE 2 (SHEET 6)

BOEING PROPRIETARY - Copyright © - Unpublished Work - See title page for details.

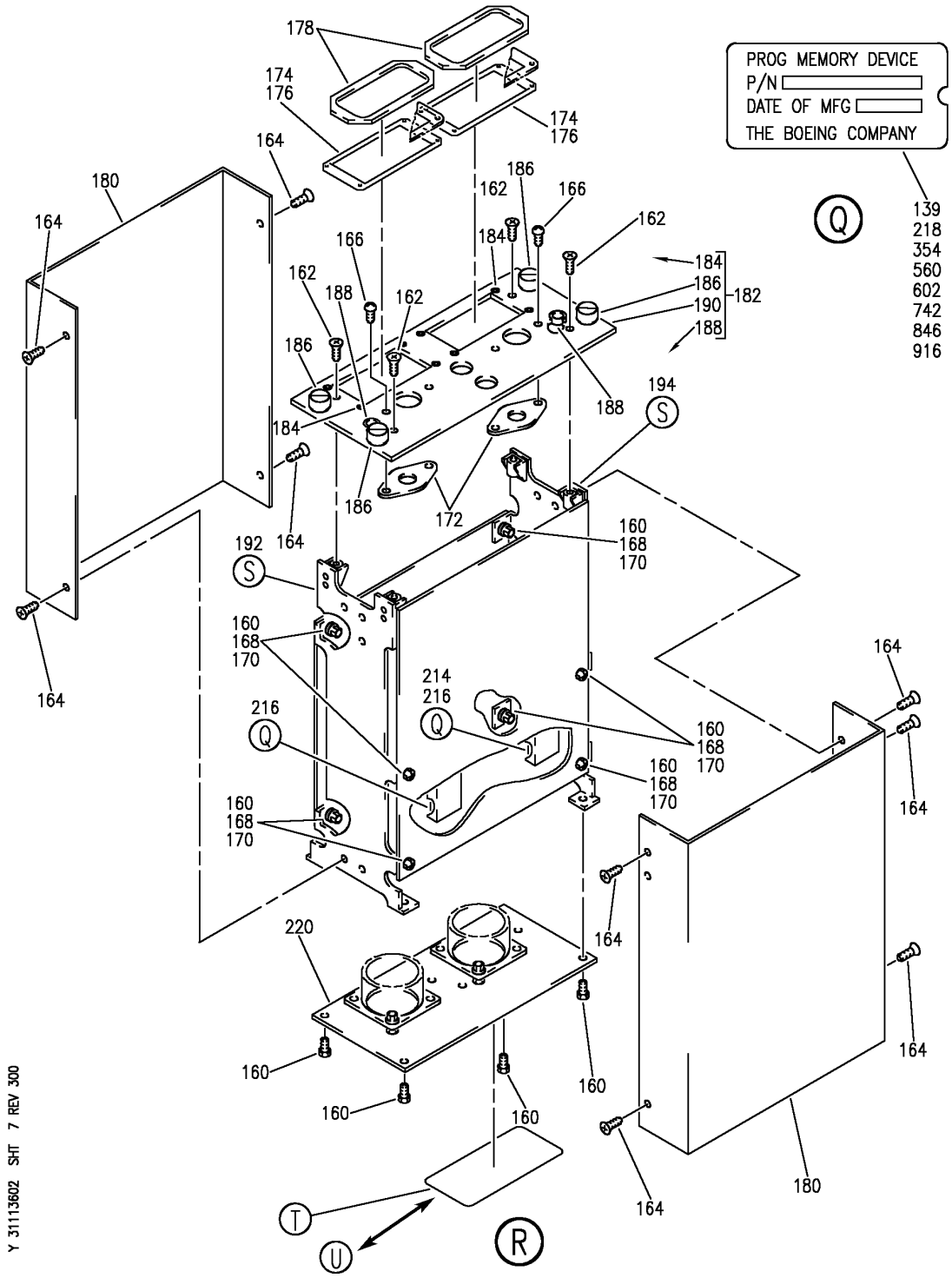

PANEL INSTL-P8 ELECTRONICS (CONTROL STAND AFT ELECTRONIC PANEL ONLY)
FIGURE 2 (SHEET 7)

BOEING PROPRIETARY - Copyright © - Unpublished Work - See title page for details.

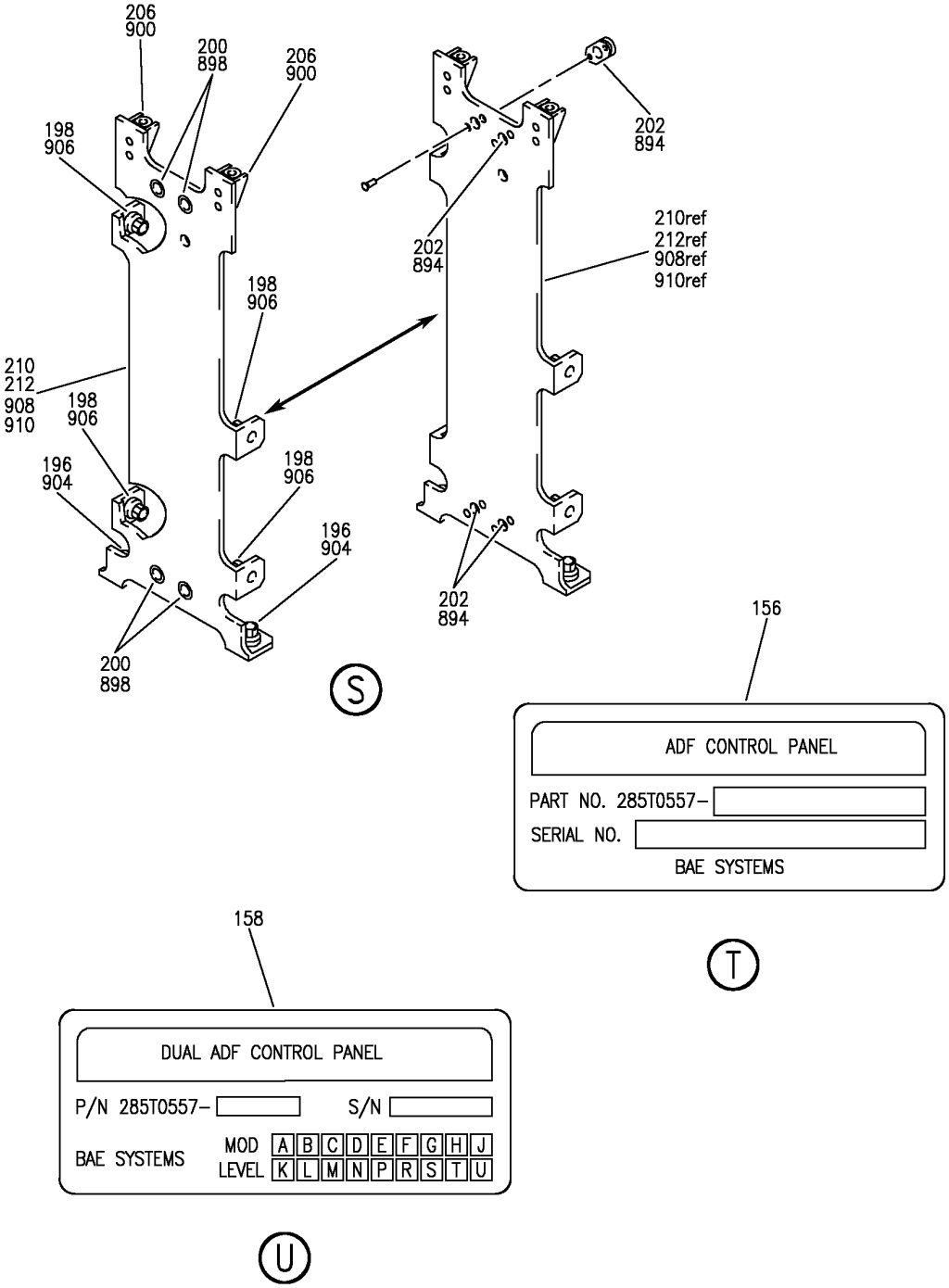

Y 31113602 SHT 8 REV 300

PANEL INSTL-P8 ELECTRONICS (CONTROL STAND AFT ELECTRONIC PANEL ONLY)
FIGURE 2 (SHEET 8)

BOEING PROPRIETARY - Copyright © - Unpublished Work - See title page for details.

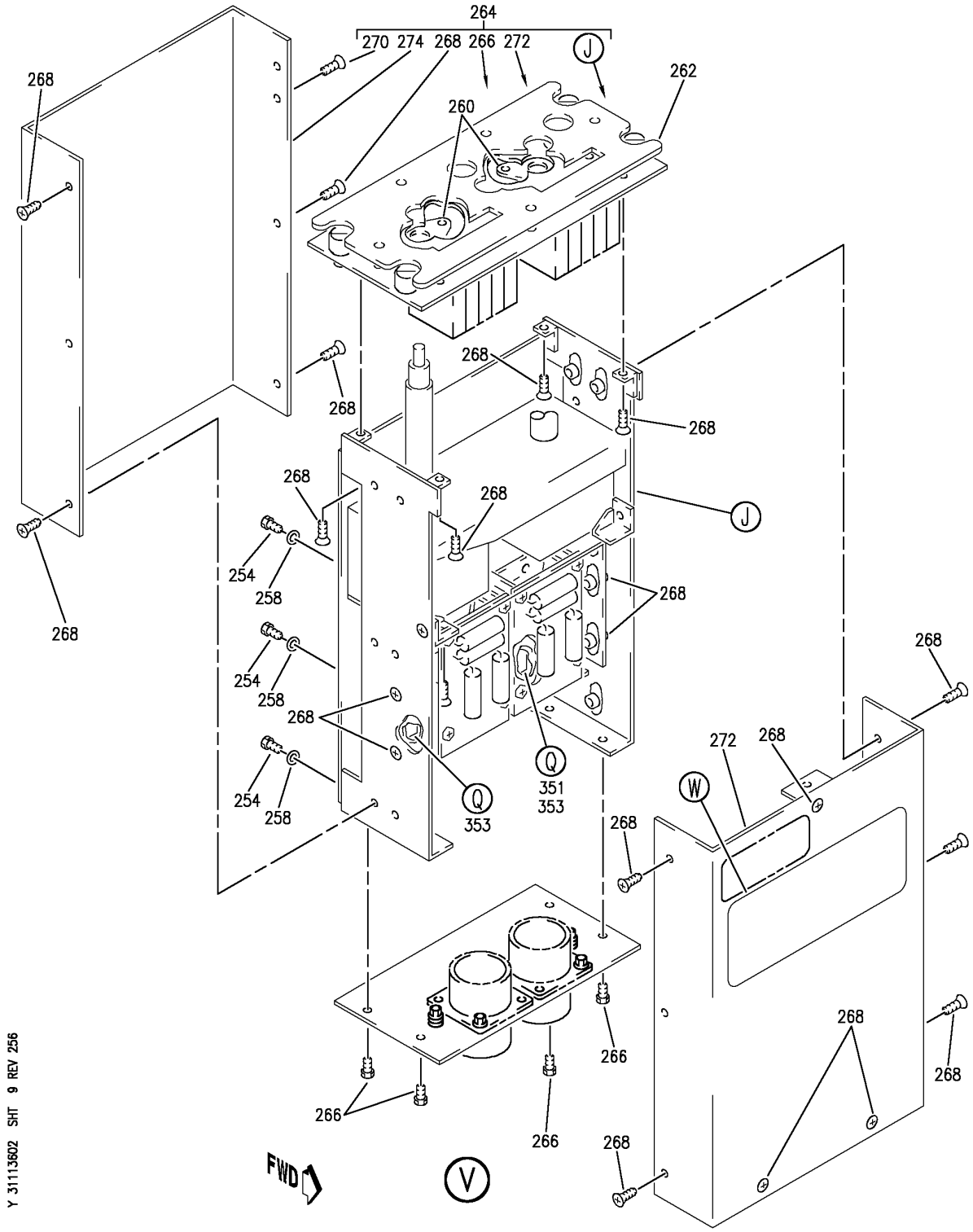

PANEL INSTL-P8 ELECTRONICS (CONTROL STAND AFT ELECTRONIC PANEL ONLY)
FIGURE 2 (SHEET 9)

BOEING PROPRIETARY - Copyright © - Unpublished Work - See title page for details.

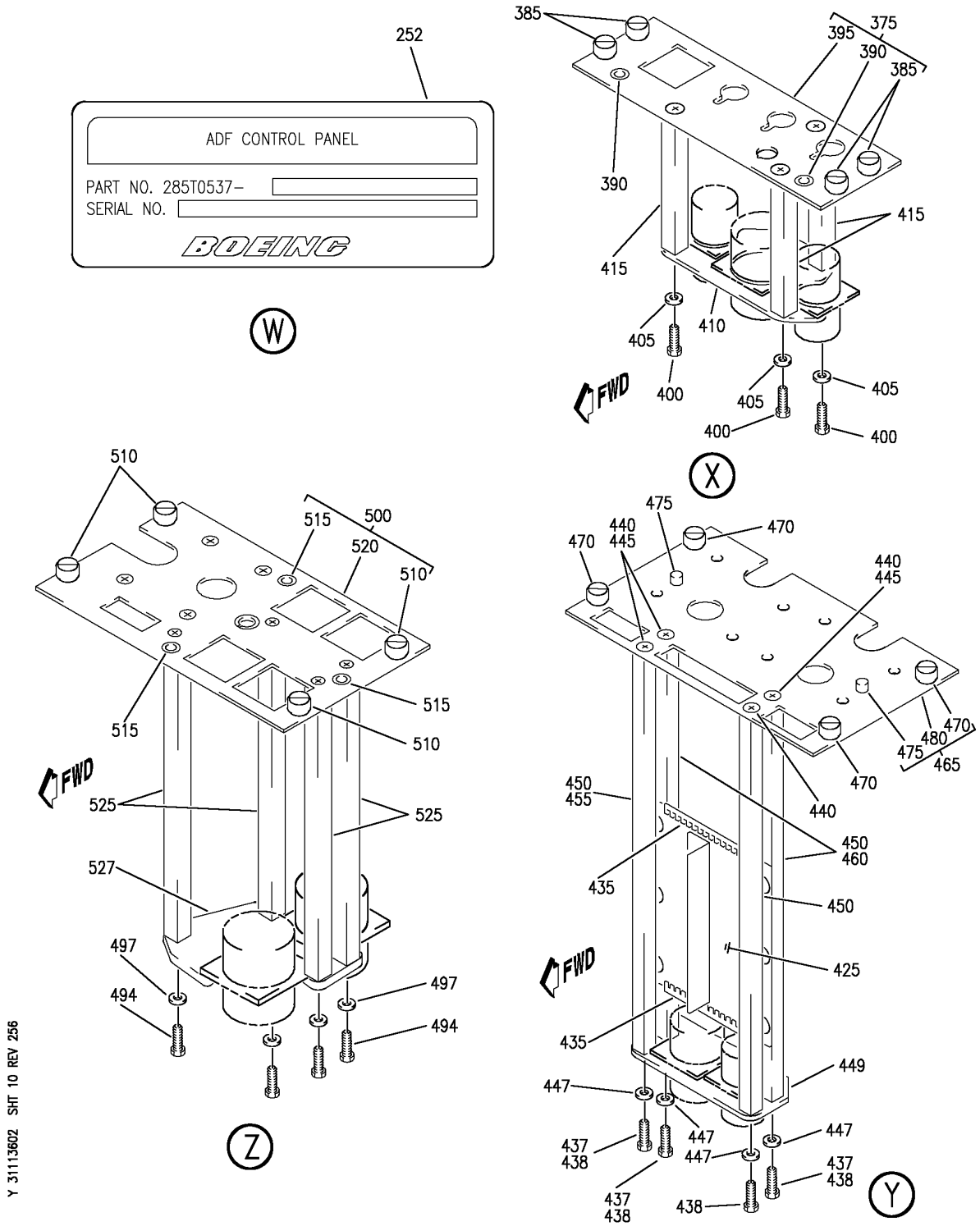

Y 31113602 SHT 10 REV 256

PANEL INSTL-P8 ELECTRONICS (CONTROL STAND AFT ELECTRONIC PANEL ONLY)
FIGURE 2 (SHEET 10)

BOEING PROPRIETARY - Copyright © - Unpublished Work - See title page for details.

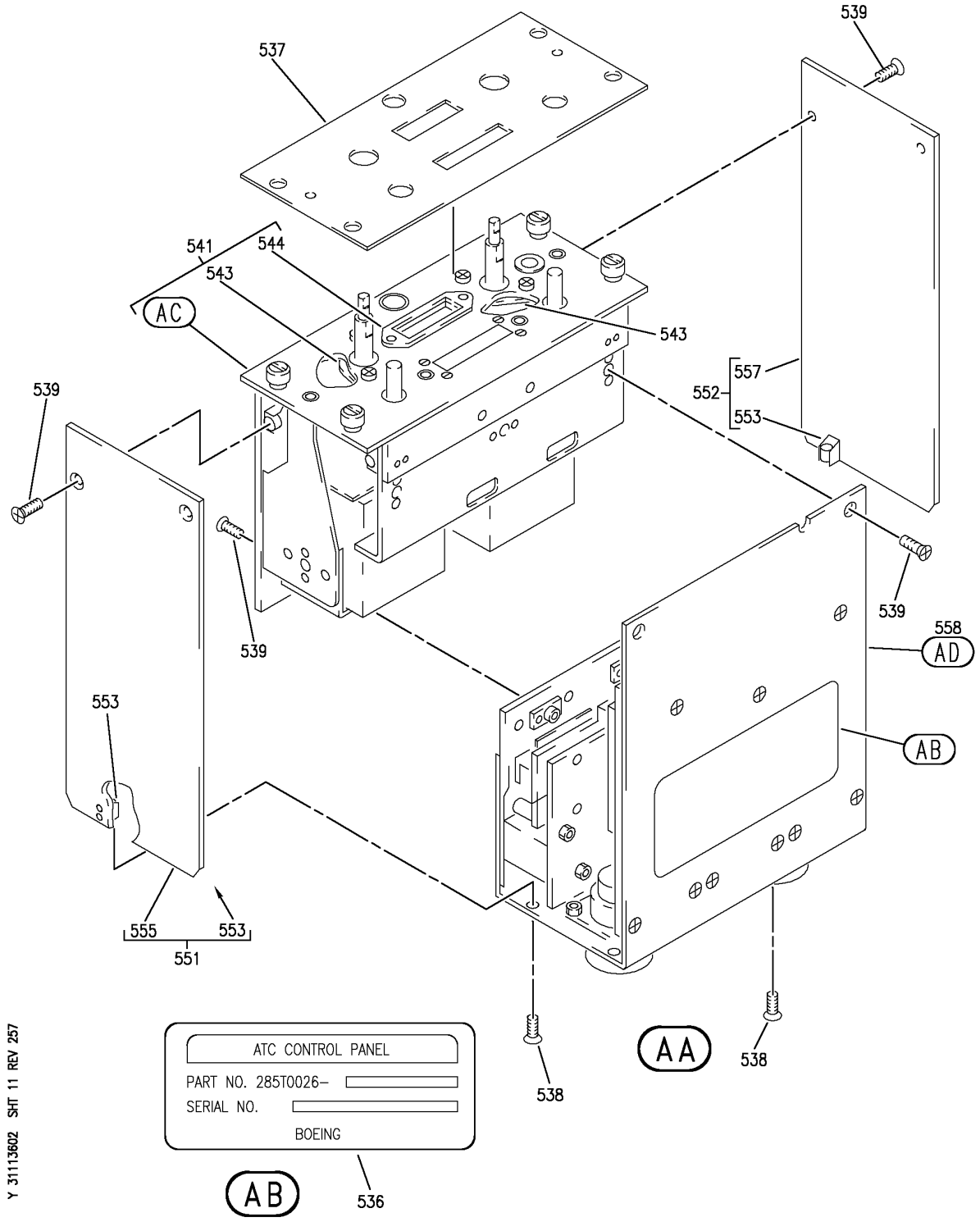

PANEL INSTL-P8 ELECTRONICS (CONTROL STAND AFT ELECTRONIC PANEL ONLY)
FIGURE 2 (SHEET 11)

BOEING PROPRIETARY - Copyright © - Unpublished Work - See title page for details.

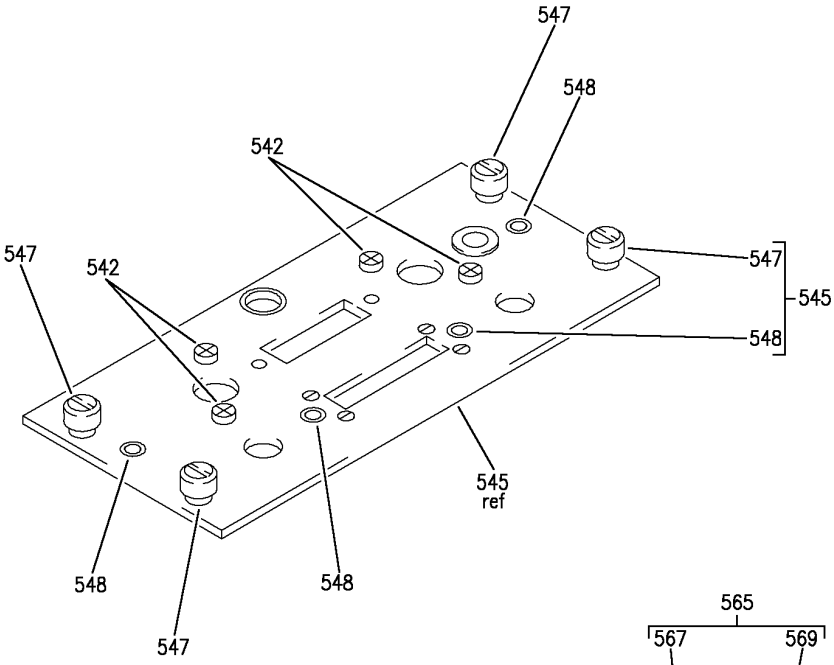

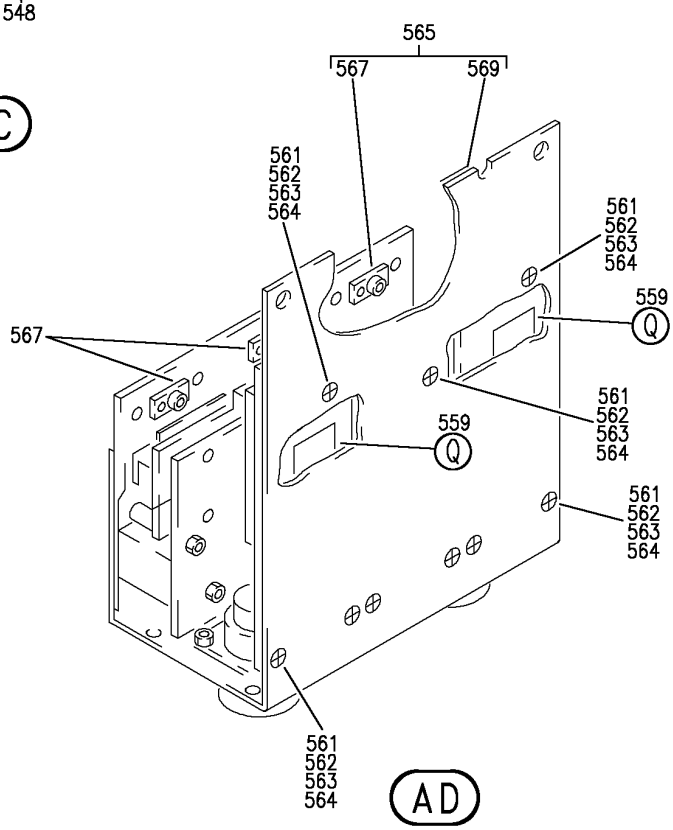

Y 31113602 SHT 12 REV 256

PANEL INSTL-P8 ELECTRONICS (CONTROL STAND AFT ELECTRONIC PANEL ONLY)
FIGURE 2 (SHEET 12)

BOEING PROPRIETARY - Copyright © - Unpublished Work - See title page for details.

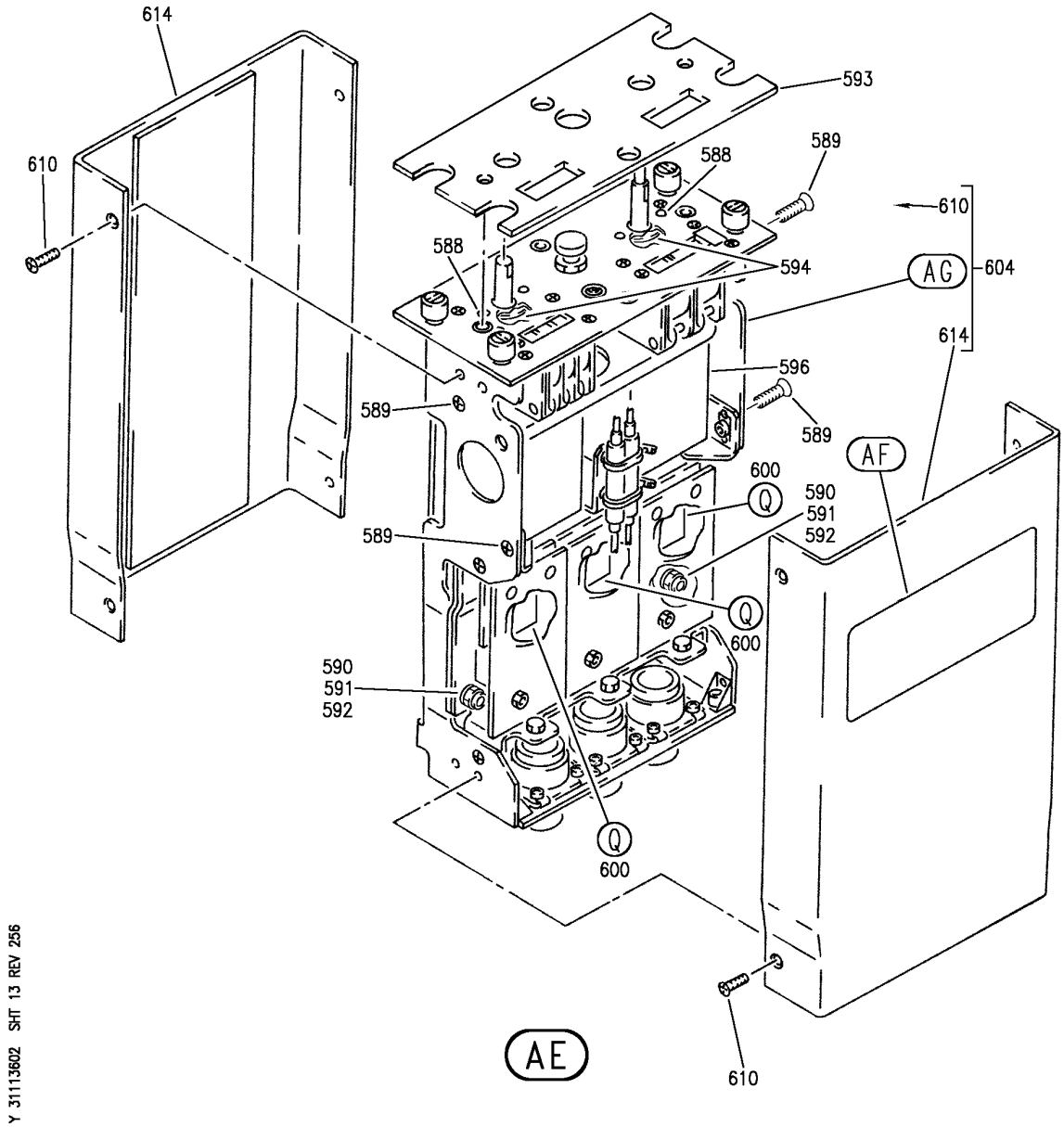

PANEL INSTL-P8 ELECTRONICS (CONTROL STAND AFT ELECTRONIC PANEL ONLY)
FIGURE 2 (SHEET 13)

BOEING PROPRIETARY - Copyright © - Unpublished Work - See title page for details.

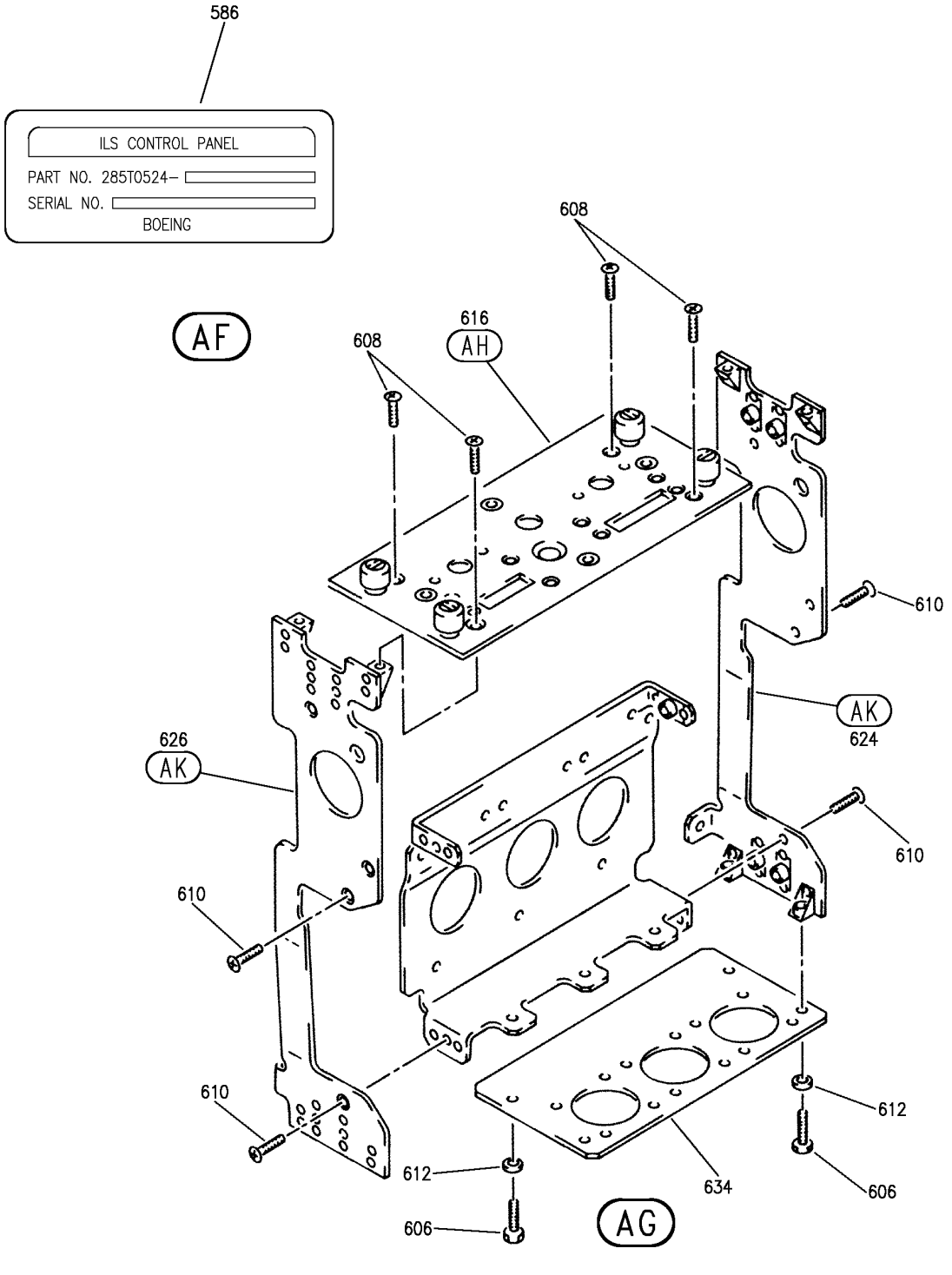

PANEL INSTL-P8 ELECTRONICS (CONTROL STAND AFT ELECTRONIC PANEL ONLY)
FIGURE 2 (SHEET 14)

BOEING PROPRIETARY - Copyright © - Unpublished Work - See title page for details.

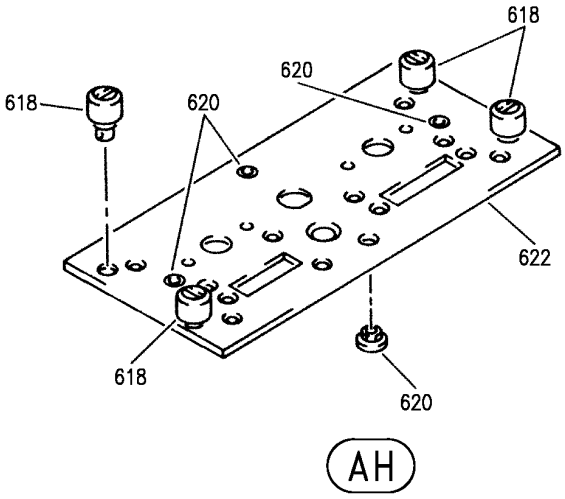

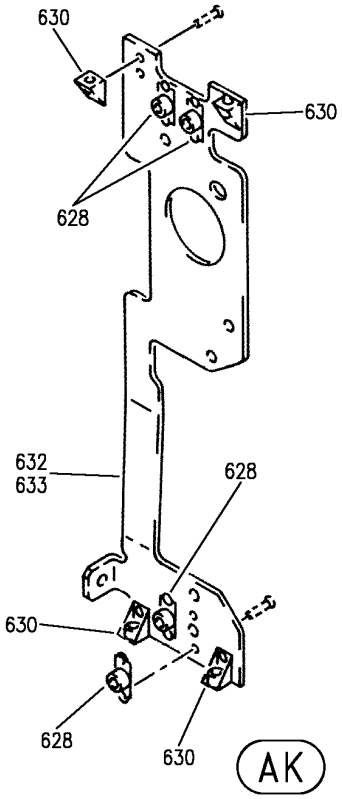

Y 31113602 SHT 15 REV 257

PANEL INSTL-P8 ELECTRONICS (CONTROL STAND AFT ELECTRONIC PANEL ONLY)
FIGURE 2 (SHEET 15)

BOEING PROPRIETARY - Copyright © - Unpublished Work - See title page for details.

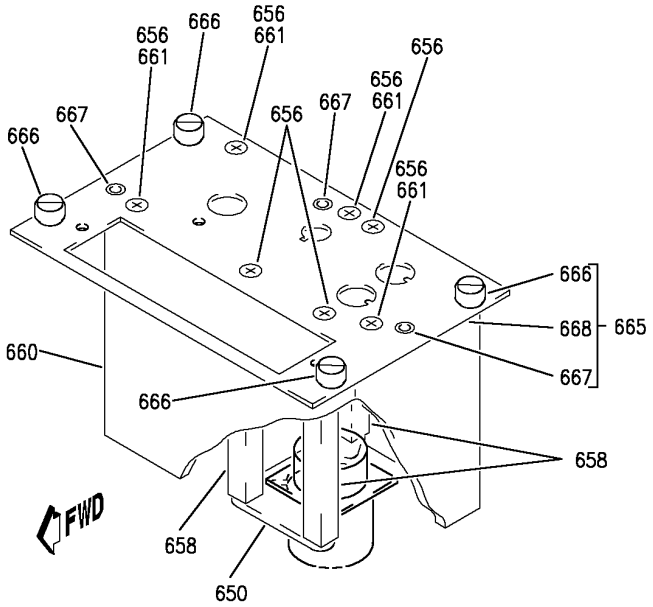

AL

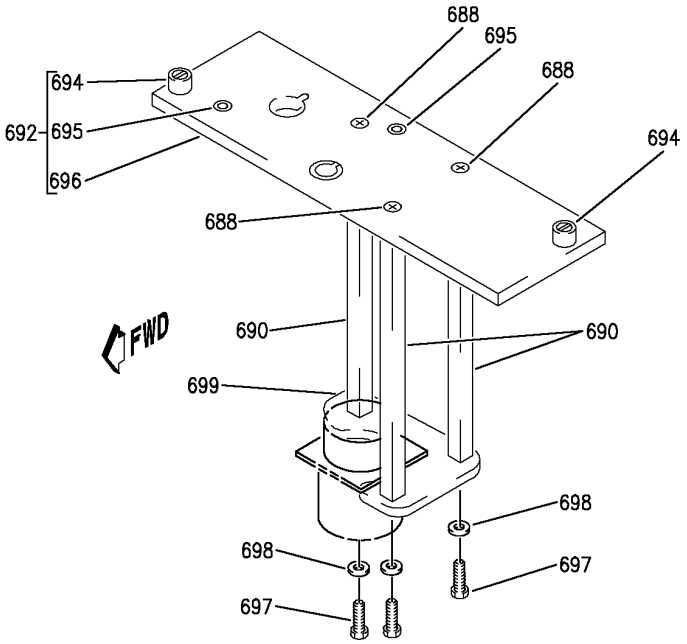

AM

Y 31113602 SHT 16 REV 256

PANEL INSTL-P8 ELECTRONICS (CONTROL STAND AFT ELECTRONIC PANEL ONLY)
FIGURE 2 (SHEET 16)

BOEING PROPRIETARY - Copyright © - Unpublished Work - See title page for details.

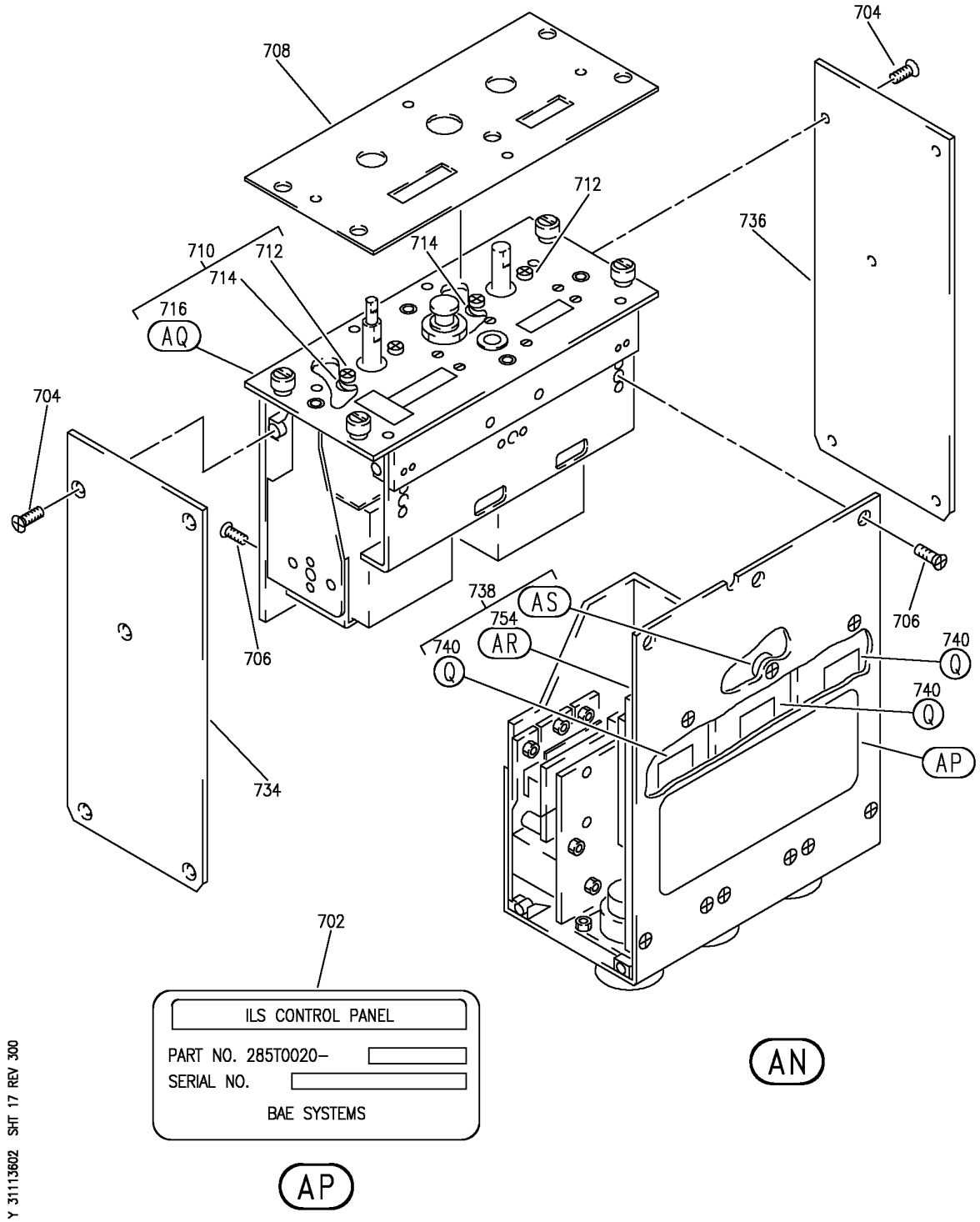

PANEL INSTL-P8 ELECTRONICS (CONTROL STAND AFT ELECTRONIC PANEL ONLY)
FIGURE 2 (SHEET 17)

BOEING PROPRIETARY - Copyright © - Unpublished Work - See title page for details.

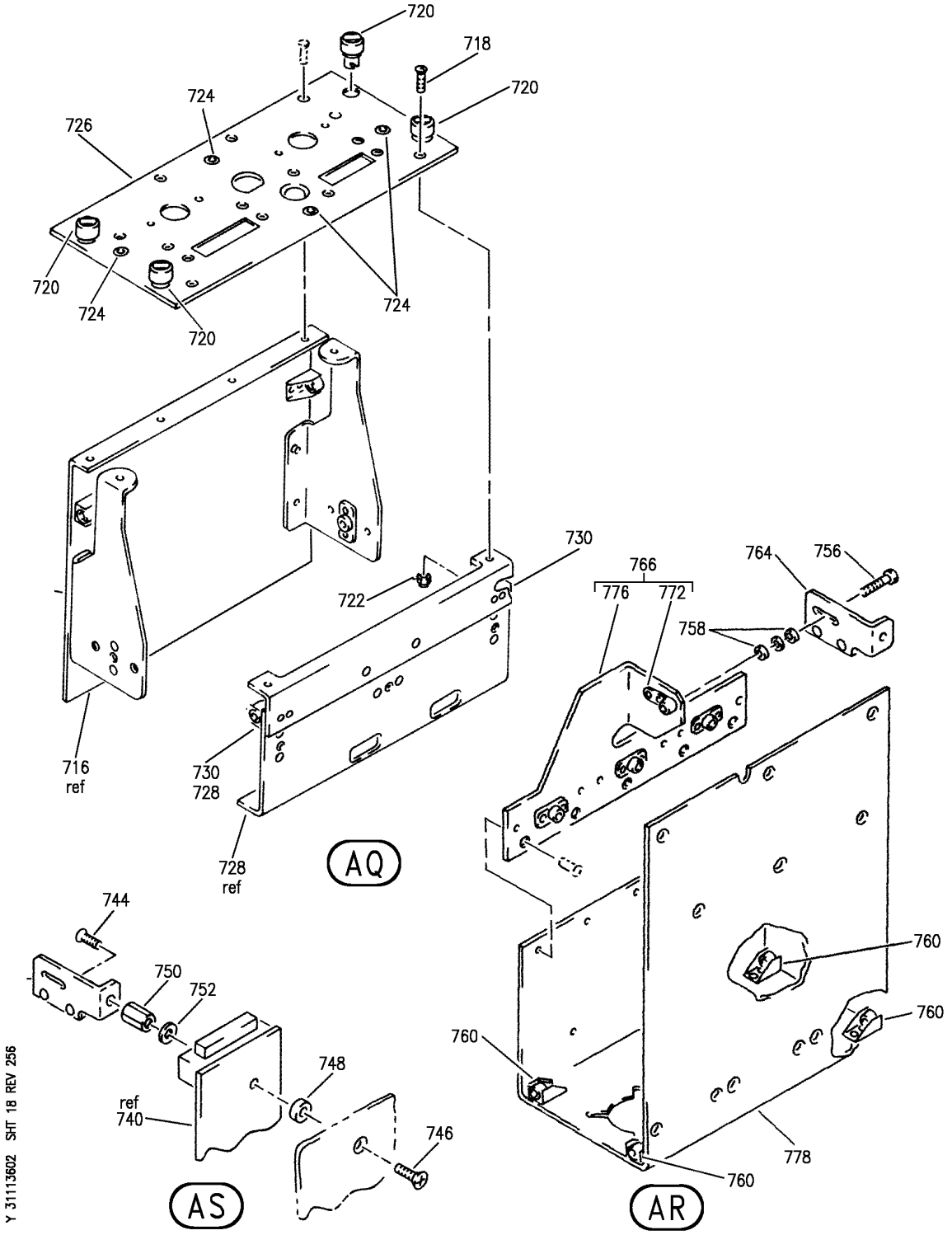

PANEL INSTL-P8 ELECTRONICS (CONTROL STAND AFT ELECTRONIC PANEL ONLY)
FIGURE 2 (SHEET 18)

BOEING PROPRIETARY - Copyright © - Unpublished Work - See title page for details.

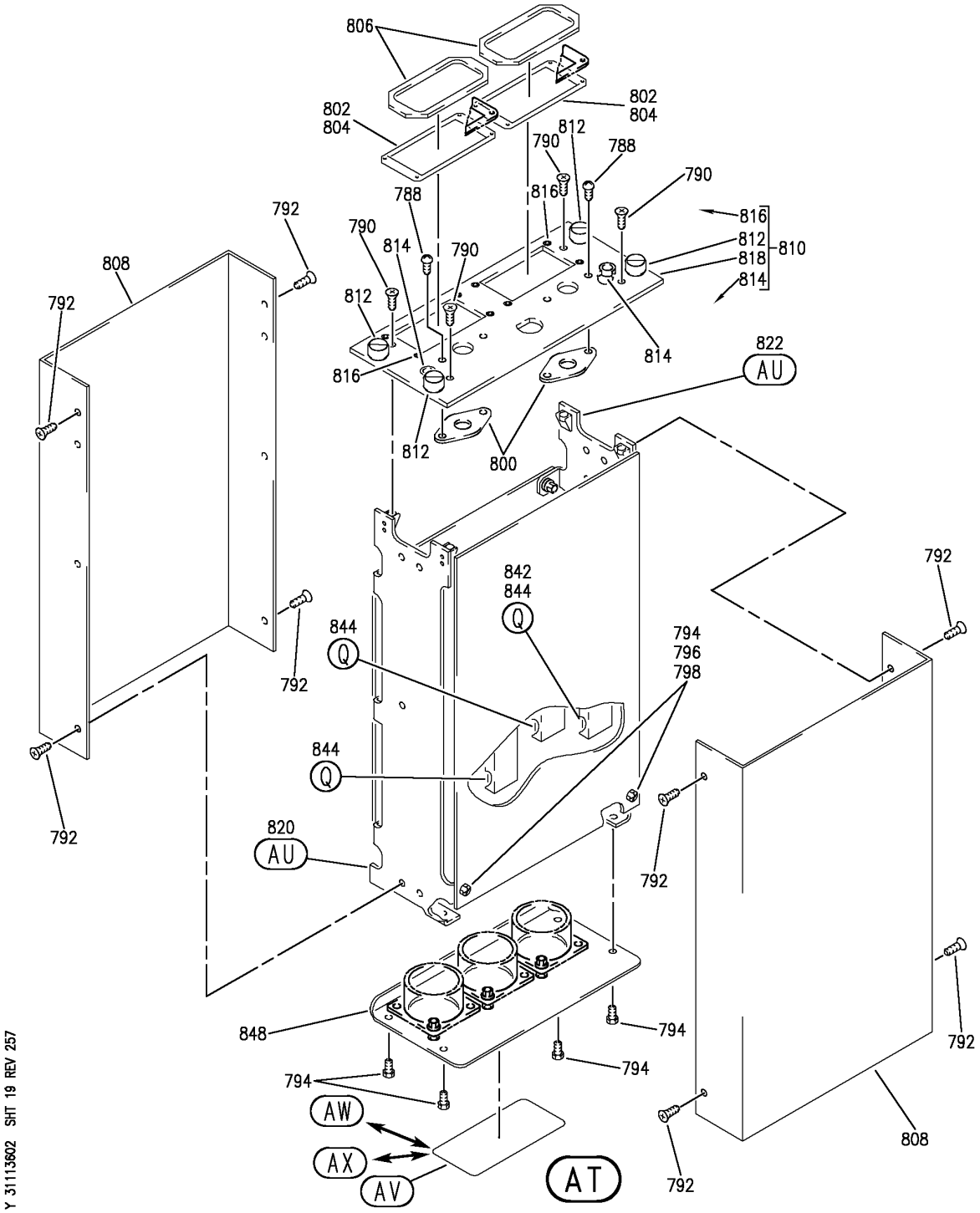

PANEL INSTL-P8 ELECTRONICS (CONTROL STAND AFT ELECTRONIC PANEL ONLY)
FIGURE 2 (SHEET 19)

BOEING PROPRIETARY - Copyright © - Unpublished Work - See title page for details.

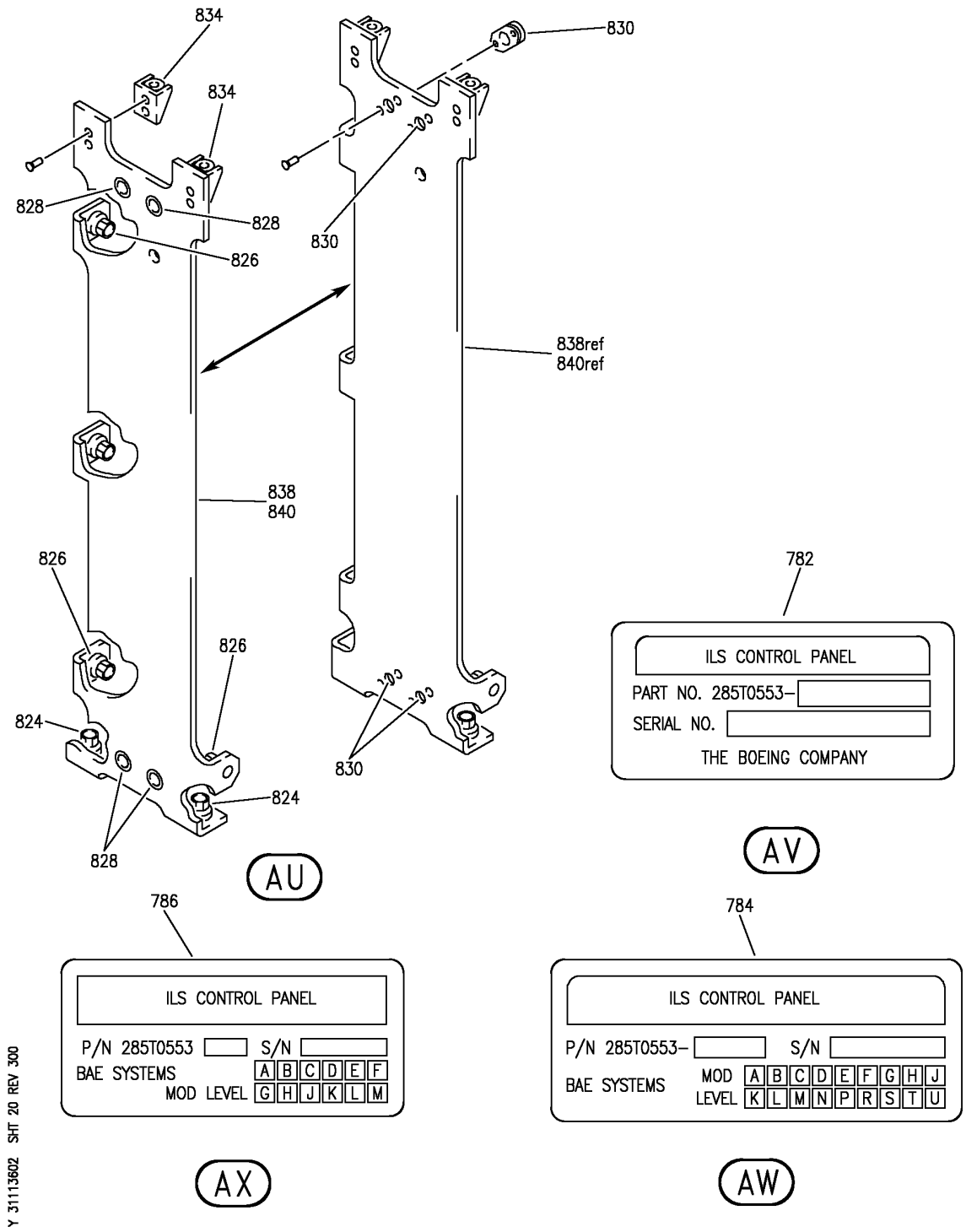

PANEL INSTL-P8 ELECTRONICS (CONTROL STAND AFT ELECTRONIC PANEL ONLY)
FIGURE 2 (SHEET 20)

BOEING PROPRIETARY - Copyright © - Unpublished Work - See title page for details.

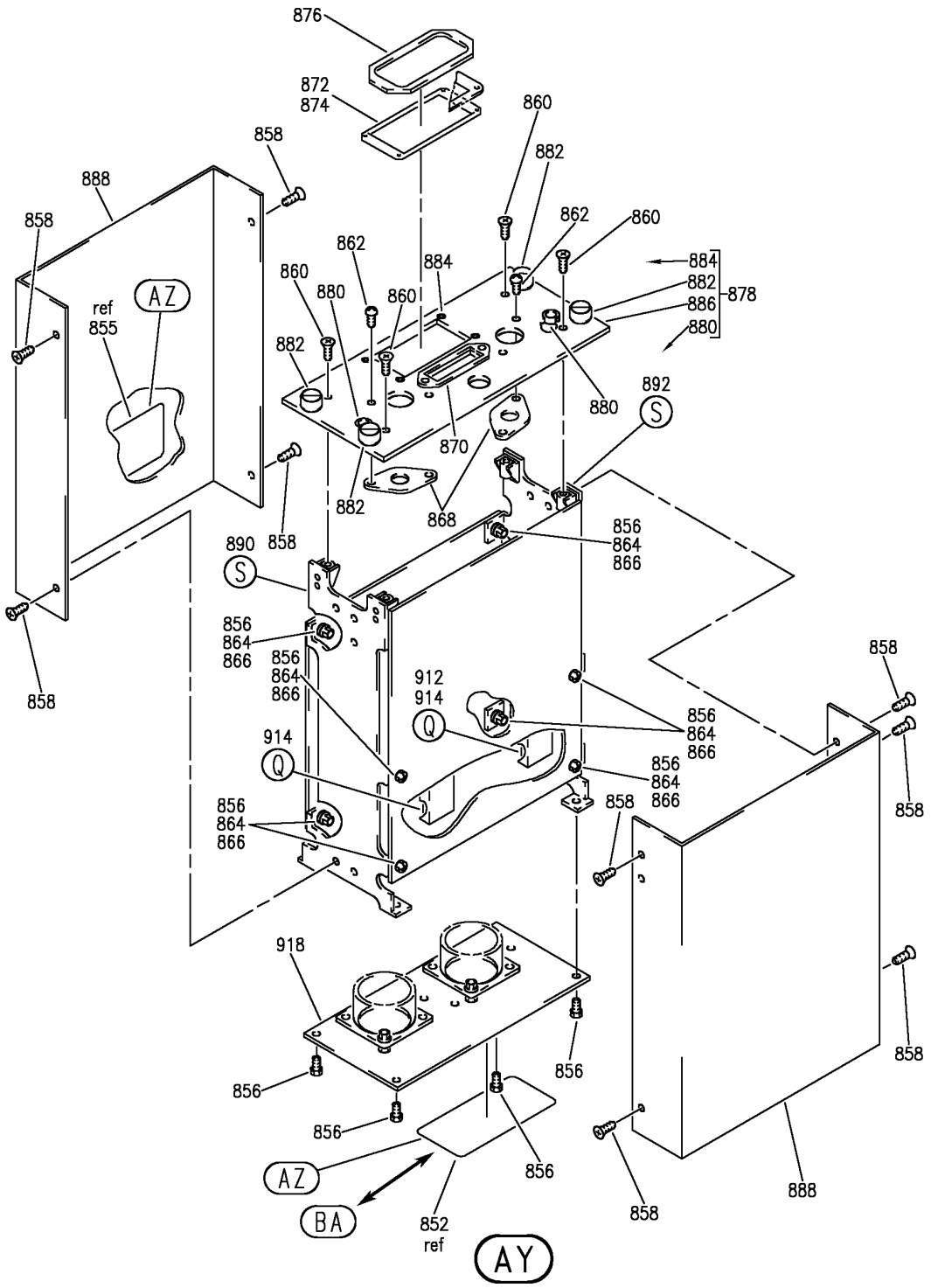

PANEL INSTL-P8 ELECTRONICS (CONTROL STAND AFT ELECTRONIC PANEL ONLY)
FIGURE 2 (SHEET 21)

BOEING PROPRIETARY - Copyright © - Unpublished Work - See title page for details.

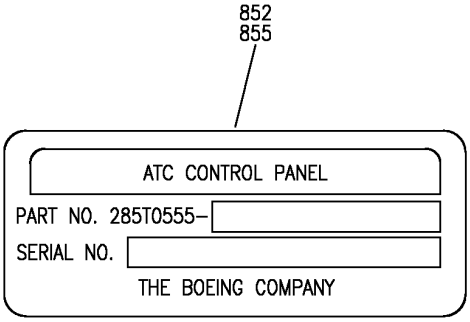

AZ

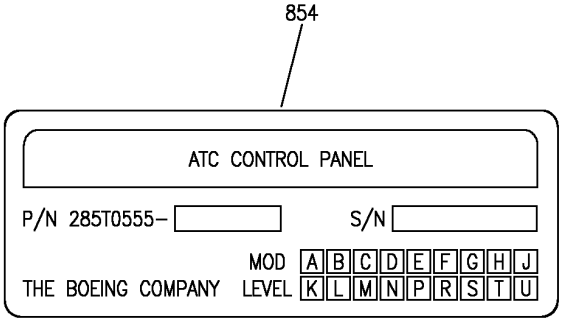

BA

Y 31113602 SHT 22 REV 300

PANEL INSTL-P8 ELECTRONICS (CONTROL STAND AFT ELECTRONIC PANEL ONLY)
FIGURE 2 (SHEET 22)

BOEING PROPRIETARY - Copyright © - Unpublished Work - See title page for details.

	FIG ITEM	PART NUMBER	1 2 3 4 5 6 7 NOMENCLATURE	EFFECT FROM TO	UNITS PER ASSY
	2				
			PANEL INSTL-P8 ELECTRONICS (CONTROL STAND AFT ELECTRONIC PANEL ONLY)	121503 904949	
-	1	233N6101-1	PANEL INSTL-P8 ELECTRONICS (CONTROL STAND AFT ELECTRONIC PANEL ONLY) VARIABLE DRAWING REF: 233N6101-5028 FOR NHA/OTHER SYS DET SEE: 25-10-00-05A	121503 904949	RF
	5	BACP10U0075T	.PANEL ASSY-	121503 904949	3
R	20	G6317-04	.PANEL-VHF CONT SUPPLIER CODE: V99837 ELECTRICAL EQUIP NUMBER: M00078 M00079 COMPONENT MAINT MANUAL REF: 23-11-07 QUALIFIED I/W DATA: G6317-04 MAY REPLACE GG6317 SUBJECT TO CUSTOMER PREFERENCE FOR BREAKDOWN SEE: 23-12-02-01	904949	RF
	20	G6317-04	.PANEL-VHF CONT SUPPLIER CODE: V99837 ELECTRICAL EQUIP NUMBER: M00078 M00079 COMPONENT MAINT MANUAL REF: 23-11-07 QUALIFIED I/W DATA: G6317-04 MAY REPLACE GG6317 SUBJECT TO CUSTOMER PREFERENCE FOR BREAKDOWN SEE: 23-12-02-01	121503	RF

MISSING ITEM NUMBERS NOT APPLICABLE

- ITEM NOT ILLUSTRATED

BOEING PROPRIETARY - Copyright © - Unpublished Work - See title page for details.

	FIG ITEM	PART NUMBER	1 2 3 4 5 6 7 NOMENCLATURE	EFFECT FROM TO	UNITS PER ASSY
	2				
R	50	285T0022-38	.PANEL ASSY-AUDIO SELECTOR	904949	2
R			SUPPLIER CODE:		
R			V89954		
R			ELECTRICAL EQUIP NUMBER:		
R			M00070		
R			M00071		
R			COMPONENT MAINT MANUAL REF:		
R			23-51-54		
R			FOR OTHER SYS DETAILS SEE:		
R			23-51-01-01		
R			33-13-58-01		
R	50	285T0022-44	.PANEL ASSY-AUDIO SELECTOR	904949	2
R			SUPPLIER CODE:		
R			V89954		
R			ELECTRICAL EQUIP NUMBER:		
R			M00070		
R			M00071		
R			COMPONENT MAINT MANUAL REF:		
R			23-51-54		
R			FOR OTHER SYS DETAILS SEE:		
R			23-51-01-01		
R			33-13-58-01		
	50	285T0022-44	.PANEL ASSY-AUDIO SELECTOR	121503	2
			SUPPLIER CODE:		
			V89954		
			ELECTRICAL EQUIP NUMBER:		
			M00070		
			M00071		
			COMPONENT MAINT MANUAL REF:		
			23-51-54		
			FOR OTHER SYS DETAILS SEE:		
			23-51-01-01		
			33-13-58-01		
	50	285T0022-38	.PANEL ASSY-AUDIO SELECTOR	121503	2
			SUPPLIER CODE:		
			V89954		
			ELECTRICAL EQUIP NUMBER:		
			M00070		
			M00071		
			COMPONENT MAINT MANUAL REF:		
			23-51-54		
			FOR OTHER SYS DETAILS SEE:		
			23-51-01-01		
			33-13-58-01		

MISSING ITEM NUMBERS NOT APPLICABLE

– ITEM NOT ILLUSTRATED

BOEING PROPRIETARY - Copyright © - Unpublished Work - See title page for details.

	FIG ITEM	PART NUMBER	1 2 3 4 5 6 7 NOMENCLATURE	EFFECT FROM TO	UNITS PER ASSY
	2				
	50	285T0022-28	.PANEL ASSY-AUDIO SELECTOR SUPPLIER CODE: V89954 ELECTRICAL EQUIP NUMBER: M00070 M00071 COMPONENT MAINT MANUAL REF: 23-51-51 FOR OTHER SYS DETAILS SEE: 23-51-01-01 33-13-58-01	121503	2
R	50	285T0022-28	.PANEL ASSY-AUDIO SELECTOR SUPPLIER CODE: V89954 ELECTRICAL EQUIP NUMBER: M00070 M00071 COMPONENT MAINT MANUAL REF: 23-51-51 FOR OTHER SYS DETAILS SEE: 23-51-01-01 33-13-58-01	904949	2
	51	BAC27TEX4053	..MARKER-ALUMINUM FOIL SUPPLIER CODE: V89954 QUALIFIED OPTIONAL DATA: BAC27TEX4053 OPTIONAL BAC27TEX1992 WHEN USED ASSOCIATED PARTS USED ON: 285T0022-44 285T0022-38	121503 904949	1
	52	BAC27TEX1992	..MARKER-ALUMINUM FOIL QUALIFIED OPTIONAL DATA: BAC27TEX4053 OPTIONAL BAC27TEX1992 WHEN USED ASSOCIATED PARTS USED ON: 285T0022-44 285T0022-38	121503 904949	1
	52	BAC27TEX1992	..MARKER-ALUMINUM FOIL USED ON: 285T0022-28	904949	1
	54	NAS514P632-5	..SCREW	121503 904949	4
	55	NAS514P440-5	..SCREW	121503 904949	12
	58	NAS514P440-4	..SCREW	121503 904949	4

MISSING ITEM NUMBERS NOT APPLICABLE

– ITEM NOT ILLUSTRATED

BOEING PROPRIETARY - Copyright © - Unpublished Work - See title page for details.

FIG ITEM	PART NUMBER	1 2 3 4 5 6 7 NOMENCLATURE	EFFECT FROM TO	UNITS PER ASSY
2				
60	BACG20ZA350	..GROMMET-	121503	2
		USED ON:	904949	
		285T0022-28		
		285T0022-38		
60	BACG20ZA350	..GROMMET-	121503	2
		OPTIONAL PART:	904949	
		BACG20ZA000350		
		USED ON:		
		285T0022-44		
60	BACG20ZA000350	..GROMMET-	121503	2
		OPTIONAL PART:	904949	
		BACG20ZA350		
		USED ON:		
		285T0022-44		
62	285T0179-43	..PANEL ASSY-FRONT	121503	1
		SUPPLIER CODE:	904949	
		V89954		
64	D1400-6A1	...STUD ASSY	121503	4
		SUPPLIER CODE:	904949	
		V08524		
		SPECIFICATION NUMBER:		
		BACS21DD1		
66	SF6G6CBB5D	...NUT	121503	3
		SUPPLIER CODE:	904949	
		V12324		
		SPECIFICATION NUMBER:		
		BACN10PA06-6		
68	F19716-06	...NUT-ANCHOR	121503	4
		SUPPLIER CODE:	904949	
		V15653		
		ATTACHING PARTS		
- 70	BACR15BA2AD	...RIVET-	121503	8
		SIZE DETERMINED ON INSTL.	904949	
		-------*-------		
71	285T0179-45	...SPACER-	121503	4
		SUPPLIER CODE:	904949	
		V89954		
72	285T0179-44	...PANEL-	121503	1
		SUPPLIER CODE:	904949	
		V89954		
73	285T0179-47	..PANEL-	121503	2
		SUPPLIER CODE:	904949	
		V89954		
74	285T0179-48	..CHASSIS ASSY-	121503	1
		SUPPLIER CODE:	904949	
		V89954		

MISSING ITEM NUMBERS NOT APPLICABLE

- ITEM NOT ILLUSTRATED

BOEING PROPRIETARY - Copyright © - Unpublished Work - See title page for details.

FIG ITEM	PART NUMBER	1 2 3 4 5 6 7 NOMENCLATURE	EFFECT FROM TO	UNITS PER ASSY
2				
75	F22A27M22-40	...NUT-ANCHOR SUPPLIER CODE: V0217B OPTIONAL PART: A27M88-04 V62554	121503 904949	12
75	A27M88-04	...NUT-ANCHOR SUPPLIER CODE: V62554 OPTIONAL PART: F22A27M22-40 V0217B ATTACHING PARTS	121503 904949	12
- 77	BACR15BA2AD	...RIVET- SIZE DETERMINED ON INSTL. -------*-------	121503 904949	24
78	285T0179-24	...CHASSIS- SUPPLIER CODE: V89954	121503 904949	1
155	285T0557-1	.PANEL ASSY-DUAL ADF CONT SUPPLIER CODE: V89954 ELECTRICAL EQUIP NUMBER: M01046 COMPONENT MAINT MANUAL REF: 34-57-62 FOR OTHER SYS DETAILS SEE: 11-31-05-01 33-13-58-01 34-57-02-02	121503	1
R 155	285T0557-1	.PANEL ASSY-DUAL ADF CONT SUPPLIER CODE: V89954 ELECTRICAL EQUIP NUMBER: M01046 COMPONENT MAINT MANUAL REF: 34-57-62 FOR OTHER SYS DETAILS SEE: 11-31-05-01 33-13-58-01 34-57-02-02	904949	1
156	BAC27TEX3471	..MARKER- SUPPLIER CODE: V89954 QUALIFIED OPTIONAL DATA: BAC27TEX3471 IS OPT TO BAC27TEX4182 WHEN USED WITH ASSOCIATED PARTS	121503 904949	1

MISSING ITEM NUMBERS NOT APPLICABLE

- ITEM NOT ILLUSTRATED

BOEING PROPRIETARY - Copyright © - Unpublished Work - See title page for details.

FIG ITEM	PART NUMBER	1 2 3 4 5 6 7 NOMENCLATURE	EFFECT FROM TO	UNITS PER ASSY
2				
158	BAC27TEX4182	..MARKER- SUPPLIER CODE: V89954 QUALIFIED OPTIONAL DATA: BAC27TEX3471 IS OPT TO BAC27TEX4182 WHEN USED WITH ASSOCIATED PARTS	121503 904949	1
160	NAS1801-04-5	..SCREW	121503 904949	12
162	NAS514P440-4P	..SCREW	121503 904949	4
164	NAS514P440-5P	..SCREW	121503 904949	10
166	MS35206-202	..SCREW	121503 904949	4
168	MS35338-40	..WASHER	121503 904949	8
170	AN960-4L	..WASHER	121503 904949	8
172	WCS225-5	..SEAL ASSY-SHAFT SUPPLIER CODE: V51074 QUALIFIED OPTIONAL DATA: WCS225-5 OPT TO WCS225-9 WHEN USED WITH ASSOCIATED ITEMS	121503 904949	2
172	WCS225-9	..SEAL ASSY-SHAFT SUPPLIER CODE: V51074 QUALIFIED OPTIONAL DATA: WCS225-5 OPT TO WCS225-9 WHEN USED WITH ASSOCIATED ITEMS	121503 904949	2
174	285T0580-1	..GASKET-LCD MODULE SUPPLIER CODE: V89954 OPTIONAL PART: 285T0580-2 V89954	121503 904949	2
176	285T0580-2	..GASKET ASSY-LCD MODULE SUPPLIER CODE: V89954 OPTIONAL PART: 285T0580-1 V89954	121503 904949	2

MISSING ITEM NUMBERS NOT APPLICABLE

– ITEM NOT ILLUSTRATED

BOEING PROPRIETARY - Copyright © - Unpublished Work - See title page for details.

FIG ITEM	PART NUMBER	1 2 3 4 5 6 7 NOMENCLATURE	EFFECT FROM TO	UNITS PER ASSY
2				
178	285T1151-2	..GASKET- SUPPLIER CODE: V89954 QUALIFIED OPTIONAL DATA: 285T1151-1 OPT TO 285T1151-2 WHEN USED WITH ASSOCIATED ITEMS	121503 904949	2
178	285T1151-1	..GASKET- SUPPLIER CODE: V89954 QUALIFIED OPTIONAL DATA: 285T1151-1 OPT TO 285T1151-2 WHEN USED WITH ASSOCIATED ITEMS	121503 904949	2
180	285T0549-2	..COVER ASSY- SUPPLIER CODE: V89954	121503 904949	2
182	285T0548-6	..PANEL ASSY-FRONT SUPPLIER CODE: V89954	121503 904949	1
184	U256-1	...NUT-PRESS SUPPLIER CODE: V46384	121503 904949	8
186	BACS21DD1B	...STUD ASSY SUPPLIER CODE: V08524 SPECIFICATION NUMBER: BACS21DD1B	121503 904949	4
188	SF6G6CBB5D	...NUT SUPPLIER CODE: V12324 SPECIFICATION NUMBER: BACN10PA06-6	121503 904949	2
190	285T0548-16	...PANEL- SUPPLIER CODE: V89954	121503 904949	1
192	285T0550-15	..PANEL ASSY-SIDE SUPPLIER CODE: V89954 OPTIONAL PART: 285T0550-3 V89954 285T0550-11 V89954	121503 904949	1

MISSING ITEM NUMBERS NOT APPLICABLE

– ITEM NOT ILLUSTRATED

BOEING PROPRIETARY - Copyright © - Unpublished Work - See title page for details.

FIG ITEM	PART NUMBER	1 2 3 4 5 6 7 NOMENCLATURE	EFFECT FROM TO	UNITS PER ASSY
2				
192	285T0550-11	..PANEL ASSY-SIDE SUPPLIER CODE: V89954 OPTIONAL PART: 285T0550-3 V89954 285T0550-15 V89954	121503 904949	1
192	285T0550-3	..PANEL ASSY-SIDE SUPPLIER CODE: V89954 OPTIONAL PART: 285T0550-11 V89954 285T0550-15 V89954	121503 904949	1
194	285T0550-16	..PANEL ASSY-SIDE SUPPLIER CODE: V89954 OPTIONAL PART: 285T0550-4 V89954 285T0550-12 V89954	121503 904949	1
194	285T0550-12	..PANEL ASSY-SIDE SUPPLIER CODE: V89954 OPTIONAL PART: 285T0550-4 V89954 285T0550-16 V89954	121503 904949	1
194	285T0550-4	..PANEL ASSY-SIDE SUPPLIER CODE: V89954 OPTIONAL PART: 285T0550-12 V89954 285T0550-16 V89954	121503 904949	1
196	FE0440EF	...NUT-PRESS SUPPLIER CODE: V46384	121503 904949	2

MISSING ITEM NUMBERS NOT APPLICABLE

– ITEM NOT ILLUSTRATED

BOEING PROPRIETARY - Copyright © - Unpublished Work - See title page for details.

FIG ITEM	PART NUMBER	1 2 3 4 5 6 7 NOMENCLATURE	EFFECT FROM TO	UNITS PER ASSY
2				
198	FE0440EF	...NUT-PRESS SUPPLIER CODE: V46384 USED ON: 285T0550-11 285T0550-12 285T0550-15 285T0550-16	121503 904949	4
198	FE0X440	...NUT-PRESS SUPPLIER CODE: V46384 USED ON: 285T0550-3 285T0550-4	121503 904949	4
200	LAC440-1	...NUT-PRESS SUPPLIER CODE: V46384 USED ON: 285T0550-3 285T0550-4 285T0550-11 285T0550-12	121503 904949	4
202	BACN10XR04	...NUTPLATE- USED ON: 285T0550-15 285T0550-16 ATTACHING PARTS	121503 904949	4
- 204	BACR15BA2AD	...RIVET- SIZE DETERMINED ON INSTL. USED ON: 285T0550-15 285T0550-16 -------*-------	121503 904949	8
206	F22A27M22-40	...NUT-ANCHOR SUPPLIER CODE: V0217B ATTACHING PARTS	121503 904949	2
- 208	BACR15BA2AD	...RIVET- SIZE DETERMINED ON INSTL. -------*-------	121503 904949	4
210	285T0550-19	...PANEL- SUPPLIER CODE: V89954 USED ON: 285T0550-15	121503 904949	1

MISSING ITEM NUMBERS NOT APPLICABLE

- ITEM NOT ILLUSTRATED

BOEING PROPRIETARY - Copyright © - Unpublished Work - See title page for details.

FIG ITEM	PART NUMBER	1 2 3 4 5 6 7 NOMENCLATURE	EFFECT FROM TO	UNITS PER ASSY
2				
210	285T0550-7	...PANEL- SUPPLIER CODE: V89954 USED ON: 285T0550-3 285T0550-11	121503 904949	1
212	285T0550-20	...PANEL- SUPPLIER CODE: V89954 USED ON: 285T0550-16	121503 904949	1
212	285T0550-8	...PANEL- SUPPLIER CODE: V89954 USED ON: 285T0550-4 285T0550-12	121503 904949	1
214	285T0561-1	..MODULE ASSY-ELECT. SUPPLIER CODE: V89954	121503 904949	1
216	285T0569-1	...DEVICE ASSY-PROGRAMMED MEMORY SUPPLIER CODE: V89954	121503 904949	2
218	BAC27TEX2007	....DECAL- OPTIONAL PART: WHB673-1D0X0D5 V85480	121503 904949	1
218	WHB673-1D0X0D5	....DECAL- SUPPLIER CODE: V85480 OPTIONAL PART: BAC27TEX2007	121503 904949	1
220	285T0546-3	..PANEL-REAR SUPPLIER CODE: V89954	121503 904949	1
250	285T0537-1	.PANEL ASSY-DUAL ADF CONT SUPPLIER CODE: V89954 ELECTRICAL EQUIP NUMBER: M01046 COMPONENT MAINT MANUAL REF: 34-57-53 FOR OTHER SYS DETAILS SEE: 11-31-05-01 33-13-58-01 34-57-02-02	121503	1

MISSING ITEM NUMBERS NOT APPLICABLE

– ITEM NOT ILLUSTRATED

BOEING PROPRIETARY - Copyright © - Unpublished Work - See title page for details.

	FIG ITEM	PART NUMBER	1 2 3 4 5 6 7 NOMENCLATURE	EFFECT FROM TO	UNITS PER ASSY
	2				
R	250	285T0537-1	.PANEL ASSY-DUAL ADF CONT	904949	1
R			SUPPLIER CODE:		
R			V89954		
R			ELECTRICAL EQUIP NUMBER:		
R			M01046		
R			COMPONENT MAINT MANUAL REF:		
R			34-57-53		
R			FOR OTHER SYS DETAILS SEE:		
R			11-31-05-01		
R			33-13-58-01		
R			34-57-02-02		
	252	BAC27TEX3153	..MARKER-	121503	1
			SUPPLIER CODE:	904949	
			V89954		
	254	NAS1801-04-6	..SCREW	121503	3
				904949	
			ATTACHING PARTS		
-	256	MS35206-202	..SCREW	121503	4
				904949	
			-------*-------		
	258	AN960-4L	..WASHER	121503	3
				904949	
	260	WCS225-5	..SEAL ASSY-	121503	2
			SUPPLIER CODE:	904949	
			V51074		
	262	S233-7	..SEAL-	121503	1
			SUPPLIER CODE:	904949	
			V51896		
			OPTIONAL PART:		
			S233-14		
			V51896		
	262	S233-14	..SEAL-	121503	1
			SUPPLIER CODE:	904949	
			V51896		
			OPTIONAL PART:		
			S233-7		
			V51896		
	264	285T0450-2	..ENCLOSURE ASSY-	121503	1
			SUPPLIER CODE:	904949	
			V89954		
			OPTIONAL PART:		
			285T0450-4		
			V89954		
	264	285T0450-4	..ENCLOSURE ASSY-	121503	1
			SUPPLIER CODE:	904949	
			V89954		
			OPTIONAL PART:		
			285T0450-2		
			V89954		

MISSING ITEM NUMBERS NOT APPLICABLE

- ITEM NOT ILLUSTRATED

BOEING PROPRIETARY - Copyright © - Unpublished Work - See title page for details.

FIG ITEM	PART NUMBER	1 2 3 4 5 6 7 NOMENCLATURE	EFFECT FROM TO	UNITS PER ASSY
2				
266	NAS1801-04-5	...SCREW	121503 904949	4
268	NAS514P440-5P	...SCREW	121503 904949	22
270	NAS514P440-7P	...SCREW	121503 904949	1
272	285T0449-1	...COVER-UPR SUPPLIER CODE: V89954	121503 904949	1
274	285T0449-9	...COVER ASSY-LWR SUPPLIER CODE: V89954	121503 904949	1
276	285T0448-9	...PANEL ASSY-FRONT SUPPLIER CODE: V89954 USED ON: 285T0450-4	121503 904949	1
276	285T0448-4	...PANEL ASSY-FRONT SUPPLIER CODE: V89954 USED ON: 285T0450-2	121503 904949	1
278	BACS21DD1B	....STUD ASSY SUPPLIER CODE: V08524 SPECIFICATION NUMBER: BACS21DD1B	121503 904949	4
280	SF6G6CBB5D	....NUT SUPPLIER CODE: V12324 SPECIFICATION NUMBER: BACN10PA06-6	121503 904949	5
282	285T0451-1	....CLIP- SUPPLIER CODE: V89954 ATTACHING PARTS	121503 904949	1
- 284	BACR15BA2AD	....RIVET- SIZE DETERMINED ON INSTL. -------*-------	121503 904949	2

MISSING ITEM NUMBERS NOT APPLICABLE

- ITEM NOT ILLUSTRATED

BOEING PROPRIETARY - Copyright © - Unpublished Work - See title page for details.

FIG ITEM	PART NUMBER	1 2 3 4 5 6 7 NOMENCLATURE	EFFECT FROM TO	UNITS PER ASSY
2				
286	RMF9201M40	....NUTPLATE SUPPLIER CODE: V72962 SPECIFICATION NUMBER: BACN10JN04 OPTIONAL PART: BRFM20A04L V52828 MF1000-04BAC V15653 NS103218-40 V80539 MF53049-04 V15653 T8124S04S V11815 VN252A40L V92215 ATTACHING PARTS	121503 904949	1
- 288	BACR15BA3AD	....RIVET- SIZE DETERMINED ON INSTL. -------*-------	121503 904949	2
290	285T0448-10	....PANEL- SUPPLIER CODE: V89954 USED ON: 285T0448-9	121503 904949	1
290	285T0448-5	....PANEL- SUPPLIER CODE: V89954 USED ON: 285T0448-4	121503 904949	1
292	285T0449-4	...PANEL ASSY-SIDE SUPPLIER CODE: V89954	121503 904949	1

MISSING ITEM NUMBERS NOT APPLICABLE

- ITEM NOT ILLUSTRATED

BOEING PROPRIETARY - Copyright © - Unpublished Work - See title page for details.

FIG ITEM	PART NUMBER	1 2 3 4 5 6 7 NOMENCLATURE	EFFECT FROM TO	UNITS PER ASSY
2				
294	RMF9201M40	....NUTPLATE SUPPLIER CODE: V72962 SPECIFICATION NUMBER: BACN10JN04 OPTIONAL PART: BRFM20A04L V52828 MF1000-04BAC V15653 NS103218-40 V80539 MF53049-04 V15653 T8124S04S V11815 VN252A40L V92215 ATTACHING PARTS	121503 904949	6
- 296	BACR15BA3AD	....RIVET- SIZE DETERMINED ON INSTL. -------*-------	121503 904949	12
298	F22A27M22-40	....NUT-ANCHOR SUPPLIER CODE: V0217B ATTACHING PARTS	121503 904949	3
- 300	BACR15BA2AD	....RIVET- SIZE DETERMINED ON INSTL. -------*-------	121503 904949	6
302	285T0447-5	....CLIP- SUPPLIER CODE: V89954	121503 904949	1
304	285T0449-8	....PANEL- SUPPLIER CODE: V89954	121503 904949	1
306	285T0449-11	...PANEL ASSY-SIDE SUPPLIER CODE: V89954	121503 904949	1

MISSING ITEM NUMBERS NOT APPLICABLE

- ITEM NOT ILLUSTRATED

BOEING PROPRIETARY - Copyright © - Unpublished Work - See title page for details.

FIG ITEM	PART NUMBER	1 2 3 4 5 6 7 NOMENCLATURE	EFFECT FROM TO	UNITS PER ASSY
2				
308	RMF9201M40	....NUTPLATE SUPPLIER CODE: V72962 SPECIFICATION NUMBER: BACN10JN04 OPTIONAL PART: BRFM20A04L V52828 MF1000-04BAC V15653 NS103218-40 V80539 MF53049-04 V15653 T8124S04S V11815 VN252A40L V92215 ATTACHING PARTS	121503 904949	5
- 310	BACR15BA3AD	....RIVET- SIZE DETERMINED ON INSTL. -------*-------	121503 904949	10
312	F22A27M22-40	....NUT-ANCHOR SUPPLIER CODE: V0217B ATTACHING PARTS	121503 904949	3
- 314	BACR15BA2AD	....RIVET- SIZE DETERMINED ON INSTL. -------*-------	121503 904949	6
316	285T0447-5	....CLIP- SUPPLIER CODE: V89954	121503 904949	1
318	285T0449-12	....PANEL- SUPPLIER CODE: V89954	121503 904949	1
320	285T0447-1	...PANEL ASSY-REAR SUPPLIER CODE: V89954	121503 904949	1
322	F22A27M22-40	....NUT-ANCHOR SUPPLIER CODE: V0217B ATTACHING PARTS	121503 904949	3
- 324	BACR15BB2AD	....RIVET- SIZE DETERMINED ON INSTL. -------*-------	121503 904949	6
326	285T0447-4	....CLIP- SUPPLIER CODE: V89954	121503 904949	1

MISSING ITEM NUMBERS NOT APPLICABLE

- ITEM NOT ILLUSTRATED

BOEING PROPRIETARY - Copyright © - Unpublished Work - See title page for details.

FIG ITEM	PART NUMBER	1 2 3 4 5 6 7 NOMENCLATURE	EFFECT FROM TO	UNITS PER ASSY
2				
328	285T0447-3	....SPACER-	121503 904949	1
		SUPPLIER CODE: V89954		
330	285T0447-2	....PANEL-	121503 904949	1
		SUPPLIER CODE: V89954		
332	285T0446-1	...SUPPORT ASSY-PWR SUPPLY	121503 904949	1
		SUPPLIER CODE: V89954		
334	TC140	....PLATE-MTG	121503 904949	1
		SUPPLIER CODE: V59730		
		SPECIFICATION NUMBER: STBP19M1		
		ATTACHING PARTS		
- 336	NAS600-6P	....SCREW	121503 904949	1
		-------*-------		
338	TC140	....PLATE-MTG	121503 904949	2
		SUPPLIER CODE: V59730		
		SPECIFICATION NUMBER: STBP19M1		
		ATTACHING PARTS		
- 340	MS20470A4-6	....RIVET	121503 904949	2
		-------*-------		
342	F22A27M22-40	....NUT-ANCHOR	121503 904949	1
		SUPPLIER CODE: V0217B		
		ATTACHING PARTS		
- 344	BACR15BB2AD	....RIVET-	121503 904949	2
		SIZE DETERMINED ON INSTL.		
		-------*-------		

MISSING ITEM NUMBERS NOT APPLICABLE

- ITEM NOT ILLUSTRATED

BOEING PROPRIETARY - Copyright © - Unpublished Work - See title page for details.

FIG ITEM	PART NUMBER	1 2 3 4 5 6 7 NOMENCLATURE	EFFECT FROM TO	UNITS PER ASSY
2				
346	RMF9201M40	....NUTPLATE SUPPLIER CODE: V72962 SPECIFICATION NUMBER: BACN10JN04 OPTIONAL PART: BRFM20A04L V52828 MF1000-04BAC V15653 NS103218-40 V80539 MF53049-04 V15653 T8124S04S V11815 VN252A40L V92215 ATTACHING PARTS	121503 904949	8
- 348	BACR15BA3AD	....RIVET- SIZE DETERMINED ON INSTL. -------*-------	121503 904949	16
350	285T0446-2	....BRACKET-SPRT SUPPLIER CODE: V89954	121503 904949	1
351	285T0445-5	..MODULE ASSY-ELECT. SUPPLIER CODE: V89954	121503 904949	1
- 352	285T0445-6	...MODULE ASSY- SUPPLIER CODE: V89954	121503 904949	RF
353	285T0253-5	....PMD ASSY- SUPPLIER CODE: V89954	121503 904949	2
354	BAC27TEX2007	.....DECAL- OPTIONAL PART: WHB673-10X05 V85480	121503 904949	1
354	WHB673-10X05	.....DECAL- SUPPLIER CODE: V85480 OPTIONAL PART: BAC27TEX2007	121503 904949	1

MISSING ITEM NUMBERS NOT APPLICABLE

- ITEM NOT ILLUSTRATED

BOEING PROPRIETARY - Copyright © - Unpublished Work - See title page for details.

FIG ITEM	PART NUMBER	1 2 3 4 5 6 7 NOMENCLATURE	EFFECT FROM TO	UNITS PER ASSY
2				
370	233N6204-17	.PANEL ASSY-FIRE/OVERHEAT TEST SUPPLIER CODE: V89954 ELECTRICAL EQUIP NUMBER: M10445 COMPONENT MAINT MANUAL REF: 26-11-52 QUALIFIED I/W DATA: 233N6204-13, -14, -15, -16, -17 ARE ALL INTERCHANGEABLE EXCEPT SUBJECT TO CUSTOMER PREFERENCE FOR OTHER SYS DETAILS SEE: 26-11-02-02, 26-12-51-01, 26-17-51-03, 33-13-58-01	121503 904949	1
375	233N6204-11	..BASEPLATE ASSY- SUPPLIER CODE: V89954 ATTACHING PARTS	121503 904949	1
- 380	NAS514P632-5	..SCREW -------*-------	121503 904949	3
385	PFSC35-38ASEMB	...STUD ASSY- SUPPLIER CODE: V72794 SPECIFICATION NUMBER: BACS21DX1B	121503 904949	4
390	SF6G6CBB5D	...NUT SUPPLIER CODE: V12324 SPECIFICATION NUMBER: BACN10PA06-6	121503 904949	2
395	233N6204-12	...BASEPLATE- SUPPLIER CODE: V89954	121503 904949	1
400	NAS1801-06-5	..SCREW	121503 904949	3
405	MS35338-41	..WASHER	121503 904949	3
410	233N3250-40	..BRACKET-SPRT	121503 904949	1
415	69B46200-14	..STANDOFF	121503 904949	3

MISSING ITEM NUMBERS NOT APPLICABLE

- ITEM NOT ILLUSTRATED

BOEING PROPRIETARY - Copyright © - Unpublished Work - See title page for details.

FIG ITEM	PART NUMBER	1 2 3 4 5 6 7 NOMENCLATURE	EFFECT FROM TO	UNITS PER ASSY
2				
420	233N6205-1	.PANEL ASSY-ENG FIRE CONT CONT SUPPLIER CODE: V89954 ELECTRICAL EQUIP NUMBER: M10443 COMPONENT MAINT MANUAL REF: 26-15-41 OPTIONAL PART: 233N6205-8 V89954 233N6205-6 V89954 FOR OTHER SYS DETAILS SEE: 26-11-54-01 26-21-01-01	904949	1
420	233N6205-6	.PANEL ASSY-ENG FIRE CONT SUPPLIER CODE: V89954 ELECTRICAL EQUIP NUMBER: M10443 COMPONENT MAINT MANUAL REF: 26-15-41 OPTIONAL PART: 233N6205-8 V89954 233N6205-1 V89954 FOR OTHER SYS DETAILS SEE: 26-11-54-01 26-21-01-01	904949	1
420	233N6205-8	.PANEL ASSY-ENG FIRE CONT SUPPLIER CODE: V89954 ELECTRICAL EQUIP NUMBER: M10443 COMPONENT MAINT MANUAL REF: 26-15-41 OPTIONAL PART: 233N6205-1 V89954 233N6205-6 V89954 FOR OTHER SYS DETAILS SEE: 26-11-54-01 26-21-01-01	904949	1

MISSING ITEM NUMBERS NOT APPLICABLE

– ITEM NOT ILLUSTRATED

BOEING PROPRIETARY - Copyright © - Unpublished Work - See title page for details.

	FIG ITEM	PART NUMBER	1 2 3 4 5 6 7 NOMENCLATURE	EFFECT FROM TO	UNITS PER ASSY
	2				
R	421	233N6205-12	.PANEL ASSY-ENG FIRE CONT	121503	1
R			SUPPLIER CODE:		
R			V89954		
R			ELECTRICAL EQUIP NUMBER:		
R			M10443		
R			COMPONENT MAINT MANUAL REF:		
R			26-15-41		
R			QUALIFIED I/W DATA:		
R			233N6205-12 MAY REPLACE		
R			BUT MAY NOT BE REPLACED		
R			BY 233N6205-8 OR		
R			233N6205-6 OR 233N6205-1		
R			IN ACCORDANCE WITH		
R			SERVICE BULLETIN		
R			757-26-0023 FOR 757		
R			AIRCRAFTS ONLY.		
R			FOR OTHER SYS DETAILS SEE:		
R			26-11-54-01		
R			26-21-01-01		
	425	233N6205-16	..BRACKET ASSY-	121503	1
			SUPPLIER CODE:		
			V89954		
			ATTACHING PARTS		
-	430	NAS1801-04-4	..SCREW	121503	6
			-------*-------		
	435	BACG20ZA0208	...GROMMET	121503	2
	437	NAS1801-06-5	..SCREW-	121503	3
			USED ON:		
			233N6205-12		
	438	BACS12CB06-5	..SCREW-	904949	4
			USED ON:		
			233N6205-1		
			233N6205-6		
			233N6205-8		
	440	NAS514P632-5	..SCREW	904949	4
	445	NAS514P632-5	..SCREW	121503	3
	447	MS35338-41	..WASHER	904949	4
	449	233N3250-61	..BRACKET-SPRT	121503	1
			USED ON:		
			233N6205-12		
	449	233N3250-26	..BRACKET-SPRT	904949	1
			USED ON:		
			233N6205-1		
			233N6205-6		
			233N6205-8		
	450	69B46200-29	..STANDOFF	904949	4
	455	69B46200-29	..STANDOFF	121503	1

MISSING ITEM NUMBERS NOT APPLICABLE

- ITEM NOT ILLUSTRATED

BOEING PROPRIETARY - Copyright © - Unpublished Work - See title page for details.

FIG ITEM	PART NUMBER	1 2 3 4 5 6 7 NOMENCLATURE	EFFECT FROM TO	UNITS PER ASSY
2				
460	233N6205-17	..STANDOFF- SUPPLIER CODE: V89954	121503	2
465	233N6205-2	..BASEPLATE ASSY- SUPPLIER CODE: V89954	904949	1
465	233N6205-13	..BASEPLATE ASSY- SUPPLIER CODE: V89954	121503	1
470	BACS21DD1B	...STUD ASSY SUPPLIER CODE: V08524 SPECIFICATION NUMBER: BACS21DD1B	904949	4
475	SF6GXBAS8D	...PIN- SUPPLIER CODE: V12324	121503	2
480	233N6205-3	...BASEPLATE- SUPPLIER CODE: V89954	904949	1
490	233N6203-105	.PANEL ASSY-APU/CARGO FIRE CONT SUPPLIER CODE: V89954 ELECTRICAL EQUIP NUMBER: M10444 COMPONENT MAINT MANUAL REF: 26-15-51 QUALIFIED I/W DATA: 233N6203-9/-23/-45/-104/ -105/-161 ARE ALL INTERCHANGEABLE EXCEPT SUBJECT TO CUSTOMER PREFERENCE PRE ALERT SB: 33A0044R1 FOR OTHER SYS DETAILS SEE: 26-22-03-02 26-23-52-02 33-13-58-01	121503 904949	1

MISSING ITEM NUMBERS NOT APPLICABLE

– ITEM NOT ILLUSTRATED

BOEING PROPRIETARY - Copyright © - Unpublished Work - See title page for details.

FIG ITEM	PART NUMBER	1 2 3 4 5 6 7 NOMENCLATURE	EFFECT FROM TO	UNITS PER ASSY
2				
490	233N6203-1105	.PANEL ASSY-APU/CARGO FIRE CONT ELECTRICAL EQUIP NUMBER: M10444 COMPONENT MAINT MANUAL REF: 26-15-51 POST ALERT SB: 33A0044R1 FOR OTHER SYS DETAILS SEE: 26-22-03-02 26-23-52-02 33-13-58-01	121503 904949	1
494	NAS1801-06-5	..SCREW	121503 904949	4
497	MS35338-41	..WASHER	121503 904949	4
500	233N6203-2	..BASEPLATE ASSY- SUPPLIER CODE: V89954 ATTACHING PARTS	121503 904949	1
- 505	NAS514P632-5	..SCREW -------*-------	121503 904949	4
510	PFSC35-38ASEMB	...STUD ASSY- SUPPLIER CODE: V72794 SPECIFICATION NUMBER: BACS21DX1B	121503 904949	4
515	SF6G6CBB5D	...NUT SUPPLIER CODE: V12324 SPECIFICATION NUMBER: BACN10PA06-6	121503 904949	3
520	233N6203-3	...BASEPLATE- SUPPLIER CODE: V89954	121503 904949	1
525	69B46200-15	..STANDOFF	121503 904949	4
527	233N6203-6	..BRACKET ASSY- SUPPLIER CODE: V89954	121503 904949	RF
R 575	071-01478-0002	.PANEL ASSY-DUAL AIR TRAFFIC CONT SUPPLIER CODE: V97896 ELECTRICAL EQUIP NUMBER: M10140	904949	1

MISSING ITEM NUMBERS NOT APPLICABLE

- ITEM NOT ILLUSTRATED

BOEING PROPRIETARY - Copyright © - Unpublished Work - See title page for details.

FIG ITEM	PART NUMBER	1 2 3 4 5 6 7 NOMENCLATURE	EFFECT FROM TO	UNITS PER ASSY
2				
575	071-01478-0002	.PANEL ASSY-DUAL AIR TRAFFIC CONT SUPPLIER CODE: V97896 ELECTRICAL EQUIP NUMBER: M10140	121503	1
585	285T0524-6	.PANEL ASSY-ILS CONT SUPPLIER CODE: V89954 ELECTRICAL EQUIP NUMBER: M00087 COMPONENT MAINT MANUAL REF: 34-31-52 FOR OTHER SYS DETAILS SEE: 11-31-05-01 33-13-58-01 34-31-02-01	121503 904949	1
586	BAC27TEX2825	..MARKER-ALUMINUM FOIL SUPPLIER CODE: V89954	121503 904949	1
588	MS35206-202	..SCREW	121503 904949	4
589	NAS514P440-6P	..SCREW	121503 904949	4
590	NAS1801-04-5	..SCREW	121503 904949	2
591	AN960-4L	..WASHER	121503 904949	2
592	92-1660-40	..NUT SUPPLIER CODE: V72962 SPECIFICATION NUMBER: BACN10DN40 OPTIONAL PART: 92-1660-440 V15653	121503 904949	2
593	S233-6	..SEAL- SUPPLIER CODE: V51896	121503 904949	1
593	S233-13	..SEAL- SUPPLIER CODE: V51896	121503 904949	1
594	WCS225-7	..SEAL ASSY-SHAFT SUPPLIER CODE: V51074	121503 904949	2
596	285T0525-3	..MODULE ASSY-ELECT. SUPPLIER CODE: V89954	121503 904949	1

MISSING ITEM NUMBERS NOT APPLICABLE

– ITEM NOT ILLUSTRATED

BOEING PROPRIETARY - Copyright © - Unpublished Work - See title page for details.

FIG ITEM	PART NUMBER	1 2 3 4 5 6 7 NOMENCLATURE	EFFECT FROM TO	UNITS PER ASSY
2				
- 598	285T0525-4	...MODULE ASSY- SUPPLIER CODE: V89954	121503 904949	1
600	285T0250-4	....PMD ASSY- SUPPLIER CODE: V89954	121503 904949	3
602	BAC27TEX2007	.....DECAL- OPTIONAL PART: WHB673-1D0X0D5 V85480	121503 904949	1
602	WHB673-1D0X0D5	.....DECAL- SUPPLIER CODE: V85480 OPTIONAL PART: BAC27TEX2007	121503 904949	1
604	285T0530-1	..ENCLOSURE ASSY- SUPPLIER CODE: V89954 OPTIONAL PART: 285T0530-2 V89954	121503 904949	1
604	285T0530-2	..ENCLOSURE ASSY- SUPPLIER CODE: V89954 OPTIONAL PART: 285T0530-1 V89954	121503 904949	1
606	NAS1801-04-5	...SCREW	121503 904949	4
608	NAS514P440-4P	...SCREW	121503 904949	4
610	NAS514P440-5P	...SCREW	121503 904949	12
612	AN960D4	...WASHER	121503 904949	4
614	285T0529-1	...COVER ASSY-SHELL SUPPLIER CODE: V89954	121503 904949	2
616	285T0528-1	...PANEL ASSY-FRONT SUPPLIER CODE: V89954 USED ON: 285T0530-1	121503 904949	1
616	285T0528-3	...PANEL ASSY-FRONT SUPPLIER CODE: V89954 USED ON: 285T0530-2	121503 904949	1

MISSING ITEM NUMBERS NOT APPLICABLE

- ITEM NOT ILLUSTRATED

BOEING PROPRIETARY - Copyright © - Unpublished Work - See title page for details.

FIG ITEM	PART NUMBER	1 2 3 4 5 6 7 NOMENCLATURE	EFFECT FROM TO	UNITS PER ASSY
2				
618	BACS21DD1B	....STUD ASSY SUPPLIER CODE: V08524 SPECIFICATION NUMBER: BACS21DD1B	121503 904949	4
620	SF6G6CBB5D	....NUT SUPPLIER CODE: V12324 SPECIFICATION NUMBER: BACN10PA06-6	121503 904949	4
622	285T0528-2	....PANEL- SUPPLIER CODE: V89954 USED ON: 285T0528-1	121503 904949	1
622	285T0528-4	....PANEL- SUPPLIER CODE: V89954 USED ON: 285T0528-3	121503 904949	1
624	285T0529-3	...PANEL ASSY-SIDE SUPPLIER CODE: V89954	121503 904949	1
626	285T0529-4	...PANEL ASSY-SIDE SUPPLIER CODE: V89954	121503 904949	1
628	RMF9201M40	....NUTPLATE SUPPLIER CODE: V72962 SPECIFICATION NUMBER: BACN10JN04 OPTIONAL PART: BRFM20A04L V52828 MF1000-04BAC V15653 NS103218-40 V80539 MF53049-04 V15653 T8124S04S V11815 VN252A40L V92215 ATTACHING PARTS	121503 904949	4
- 629	BACR15BA3AD	....RIVET- SIZE DETERMINED ON INSTL. -------*-------	121503 904949	8

MISSING ITEM NUMBERS NOT APPLICABLE

- ITEM NOT ILLUSTRATED

BOEING PROPRIETARY - Copyright © - Unpublished Work - See title page for details.

FIG ITEM	PART NUMBER	1 2 3 4 5 6 7 NOMENCLATURE	EFFECT FROM TO	UNITS PER ASSY
2				
630	F22A27M22-40	....NUT-ANCHOR SUPPLIER CODE: V0217B ATTACHING PARTS	121503 904949	4
- 631	BACR15BA2AD	....RIVET- SIZE DETERMINED ON INSTL. -------*-------	121503 904949	8
632	285T0529-5	....PANEL- SUPPLIER CODE: V89954 USED ON: 285T0529-3	121503 904949	1
633	285T0529-6	....PANEL- SUPPLIER CODE: V89954 USED ON: 285T0529-4	121503 904949	1
634	285T0527-1	...PANEL-REAR SUPPLIER CODE: V89954	121503 904949	1
640	362-021-001	.INDICATOR ASSY-RUD TRIM SUPPLIER CODE: V26055 SPECIFICATION NUMBER: S231T282-1 ELECTRICAL EQUIP NUMBER: N00083 COMPONENT MAINT MANUAL REF: 27-20-01	121503 904949	RF
640	362-021-002	.INDICATOR ASSY-RUD TRIM SUPPLIER CODE: V26055 FUNCTIONAL DESCRIPTION: DISPLAYS RUDDER TRIM POSITION AS NOSE LEFT AND RIGHT UNITS SPECIFICATION NUMBER: S231T282-2 ELECTRICAL EQUIP NUMBER: N00083 COMPONENT MAINT MANUAL REF: 27-20-01	121503 904949	RF

MISSING ITEM NUMBERS NOT APPLICABLE

- ITEM NOT ILLUSTRATED

BOEING PROPRIETARY - Copyright © - Unpublished Work - See title page for details.

FIG ITEM	PART NUMBER	1 2 3 4 5 6 7 NOMENCLATURE	EFFECT FROM TO	UNITS PER ASSY
2				
645	233T6201-21	.PANEL ASSY-AIL. RUD TRIM CONT SUPPLIER CODE: V89954 ELECTRICAL EQUIP NUMBER: M00074 COMPONENT MAINT MANUAL REF: 27-21-63 QUALIFIED I/W DATA: 233T6201-19 I/W 233T6201-21 EXCEPT FOR ETOPS WHERE 233T6201-21 MUST BE INSTALLED. FOR OTHER SYS DETAILS SEE: 27-11-23-01 27-21-23-01	121503 904949	1
645	233T6201-22	.PANEL ASSY-AIL. RUD TRIM CONT SUPPLIER CODE: V89954 ELECTRICAL EQUIP NUMBER: M00074 FOR OTHER SYS DETAILS SEE: 27-11-23-01 27-21-23-01	121503 904949	1
650	233T6200-38	..BRACKET-SPRT ATTACHING PARTS	121503 904949	1
- 652	NAS1801-06-5	..SCREW-	121503 904949	3
- 654	MS35338-41	..WASHER -------*-------	121503 904949	3
656	NAS514P632-5	..SCREW	121503 904949	7
658	69B46200-7	..STANDOFF	121503 904949	3
660	233T6201-20	..SHROUD ASSY- SUPPLIER CODE: V89954 USED ON: 233T6201-19 233T6201-21	121503 904949	1
661	MF6001-06	...NUTPLATE SUPPLIER CODE: V15653 SPECIFICATION NUMBER: BACN10KJ06CM	121503 904949	4

MISSING ITEM NUMBERS NOT APPLICABLE

- ITEM NOT ILLUSTRATED

BOEING PROPRIETARY - Copyright © - Unpublished Work - See title page for details.

FIG ITEM	PART NUMBER	1 2 3 4 5 6 7 NOMENCLATURE	EFFECT FROM TO	UNITS PER ASSY
2				
		ATTACHING PARTS		
- 663	BACR15BB3AD	...RIVET-	121503	8
		SIZE DETERMINED ON INSTL.	904949	
		USED ON:		
		233T6201-17		
- 663	BACR15BA3AD	...RIVET-	121503	8
		SIZE DETERMINED ON INSTL.	904949	
		USED ON:		
		233T6201-20		
		-------*-------		
665	233T6201-15	..BASEPLATE ASSY-	121503	1
		SUPPLIER CODE:	904949	
		V89954		
666	BACS21DD1B	...STUD ASSY	121503	4
		SUPPLIER CODE:	904949	
		V08524		
		SPECIFICATION NUMBER:		
		BACS21DD1B		
667	SF6G6CBB5D	...NUT	121503	3
		SUPPLIER CODE:	904949	
		V12324		
		SPECIFICATION NUMBER:		
		BACN10PA06-6		
668	233T6201-16	...BASEPLATE-	121503	1
		SUPPLIER CODE:	904949	
		V89954		
R 674	2041223-0402	.PANEL-WEATHER RDR CONT	121503	RF
R		SUPPLIER CODE:	904949	
R		V97896		
R		SPECIFICATION NUMBER:		
R		S220T109-401		
R		ELECTRICAL EQUIP NUMBER:		
R		M00075		
R		COMPONENT MAINT MANUAL REF:		
R		34-41-12		
R		FOR BREAKDOWN SEE:		
R		34-43-02-01		
682	BACP10U0037T	.PANEL ASSY-	121503	1
			904949	
684	BACP10U0112T	.PANEL ASSY-	121503	1
			904949	
686	233N6202-1	.PANEL ASSY-RADIO TRANSMIT	121503	1
		INTERCOM SWITCH	904949	
		ELECTRICAL EQUIP NUMBER:		
		M10370		
		FOR OTHER SYS DETAILS SEE:		
		23-51-52-01		
688	NAS514P632-5	..SCREW	121503	3
			904949	

MISSING ITEM NUMBERS NOT APPLICABLE

– ITEM NOT ILLUSTRATED

BOEING PROPRIETARY - Copyright © - Unpublished Work - See title page for details.

FIG ITEM	PART NUMBER	1 2 3 4 5 6 7 NOMENCLATURE	EFFECT FROM TO	UNITS PER ASSY
2				
690	69B46200-5	..STANDOFF	121503 904949	3
692	233N6202-2	..BASEPLATE ASSY	121503 904949	1
694	BACS21DD1B	...STUD ASSY SUPPLIER CODE: V08524 SPECIFICATION NUMBER: BACS21DD1B	121503 904949	2
695	SF6G6CBB5D	...NUT SUPPLIER CODE: V12324 SPECIFICATION NUMBER: BACN10PA06-6	121503 904949	2
696	233N6202-3	...BASEPLATE	121503 904949	1
697	BACS12CB06-5	..SCREW	121503 904949	3
698	MS35338-41	..WASHER	121503 904949	3
699	233N3250-17	..BRACKET-SPRT	121503 904949	1
700	285T0020-8	.PANEL ASSY-ILS CONT SUPPLIER CODE: V89954 ELECTRICAL EQUIP NUMBER: M00087 COMPONENT MAINT MANUAL REF: 34-31-51 FOR OTHER SYS DETAILS SEE: 11-31-05-01 33-13-58-01 34-31-02-01	121503 904949	1
702	BAC27TEX0934	..MARKER-ALUMINUM FOIL SUPPLIER CODE: V89954	121503 904949	1
704	NAS514P440-4P	..SCREW	121503 904949	10
706	NAS514P440-5P	..SCREW	121503 904949	6
708	S233-2	..SEAL- SUPPLIER CODE: V51896 OPTIONAL PART: S233-9 V51896	121503 904949	1

MISSING ITEM NUMBERS NOT APPLICABLE

— ITEM NOT ILLUSTRATED

BOEING PROPRIETARY - Copyright © - Unpublished Work - See title page for details.

FIG ITEM	PART NUMBER	1 2 3 4 5 6 7 NOMENCLATURE	EFFECT FROM TO	UNITS PER ASSY
2				
708	S233-9	..SEAL- SUPPLIER CODE: V51896 OPTIONAL PART: S233-2 V51896	121503 904949	1
710	285T0082-10	..MODULE ASSY-FRONT SUPPLIER CODE: V89954 OPTIONAL PART: 285T0082-14 V89954	121503 904949	1
710	285T0082-14	..MODULE ASSY-FRONT SUPPLIER CODE: V89954 OPTIONAL PART: 285T0082-10 V89954	121503 904949	1
712	MS35206-202	...SCREW	121503 904949	4
714	WCS225-3	...SEAL ASSY- SUPPLIER CODE: V51074 OPTIONAL PART: WCS225-7 V51074	121503 904949	2
714	WCS225-7	...SEAL ASSY- SUPPLIER CODE: V51074 OPTIONAL PART: WCS225-3 V51074	121503 904949	2
716	285T0440-1	...PANEL ASSY- SUPPLIER CODE: V89954 USED ON: 285T0082-10	121503 904949	1
716	285T0440-22	...PANEL ASSY- SUPPLIER CODE: V89954 USED ON: 285T0082-14	121503 904949	1
718	NAS514P440-5P	....SCREW	121503 904949	2
720	BACS21DD1B	....STUD ASSY SUPPLIER CODE: V08524 SPECIFICATION NUMBER: BACS21DD1B	121503 904949	4

MISSING ITEM NUMBERS NOT APPLICABLE

– ITEM NOT ILLUSTRATED

BOEING PROPRIETARY - Copyright © - Unpublished Work - See title page for details.

FIG ITEM	PART NUMBER	1 2 3 4 5 6 7 NOMENCLATURE	EFFECT FROM TO	UNITS PER ASSY
2				
722	92-1660-40	....NUT SUPPLIER CODE: V72962 SPECIFICATION NUMBER: BACN10DN40 OPTIONAL PART: 92-1660-440 V15653	121503 904949	2
724	SF6G6CBB5D	....NUT SUPPLIER CODE: V12324 SPECIFICATION NUMBER: BACN10PA06-6	121503 904949	4
726	285T0440-5	....PANEL- SUPPLIER CODE: V89954 USED ON: 285T0440-1	121503 904949	1
726	285T0440-23	....PANEL- SUPPLIER CODE: V89954 USED ON: 285T0440-22	121503 904949	1
728	285T0438-1	....CHASSIS ASSY-UPR SUPPLIER CODE: V89954	121503 904949	1
730	F22A27M22-40	.....NUT-ANCHOR SUPPLIER CODE: V0217B ATTACHING PARTS	121503 904949	2
- 732	BACR15BA2AD	.....RIVET- SIZE DETERMINED ON INSTL. -------*-------	121503 904949	4
734	285T0439-3	..PANEL-SIDE SUPPLIER CODE: V89954	121503 904949	1
736	285T0439-4	..PANEL-SIDE SUPPLIER CODE: V89954	121503 904949	1
738	285T0081-10	..MODULE ASSY-REAR SUPPLIER CODE: V89954	121503 904949	1
740	285T0250-4	...PMD ASSY- SUPPLIER CODE: V89954	121503 904949	3
742	BAC27TEX2007	....DECAL- OPTIONAL PART: WHB673-1D0X0D5 V85480	121503 904949	1

MISSING ITEM NUMBERS NOT APPLICABLE

- ITEM NOT ILLUSTRATED

BOEING PROPRIETARY - Copyright © - Unpublished Work - See title page for details.

FIG ITEM	PART NUMBER	1 2 3 4 5 6 7 NOMENCLATURE	EFFECT FROM TO	UNITS PER ASSY
2				
742	WHB673-1D0X0D5	....DECAL-	121503	1
		SUPPLIER CODE:	904949	
		V85480		
		OPTIONAL PART:		
		BAC27TEX2007		
744	NAS514P440-4P	...SCREW	121503	1
			904949	
746	NAS514P440-7P	...SCREW	121503	1
			904949	
748	NAS43DD0-8	...SPACER	121503	1
			904949	
750	8214B0440HL	...SPACER-THREADED	121503	1
		SUPPLIER CODE:	904949	
		V06540		
752	NAS620-4L	...WASHER	121503	1
			904949	
754	285T0439-1	...CHASSIS ASSY-	121503	1
		SUPPLIER CODE:	904949	
		V89954		
756	NAS1801-04-5	....SCREW	121503	1
			904949	
758	AN960D4L	....WASHER	121503	3
			904949	
760	F22A27M22-40	....NUT-ANCHOR	121503	4
		SUPPLIER CODE:	904949	
		V0217B		
		ATTACHING PARTS		
- 762	BACR15BB2AD	....RIVET-	121503	8
		SIZE DETERMINED ON INSTL.	904949	
		-------*-------		
764	285T0439-6	....BRACKET ASSY-	121503	1
		SUPPLIER CODE:	904949	
		V89954		
766	285T0439-2	....SUPPORT ASSY-	121503	1
		SUPPLIER CODE:	904949	
		V89954		
		ATTACHING PARTS		
- 768	BACR15BA3AD	....RIVET-	121503	5
		SIZE DETERMINED ON INSTL.	904949	
- 770	BACR15BA3AD	....RIVET-	121503	5
		SIZE DETERMINED ON INSTL.	904949	
		-------*-------		

MISSING ITEM NUMBERS NOT APPLICABLE

- ITEM NOT ILLUSTRATED

BOEING PROPRIETARY - Copyright © - Unpublished Work - See title page for details.

FIG ITEM	PART NUMBER	1 2 3 4 5 6 7 NOMENCLATURE	EFFECT FROM TO	UNITS PER ASSY
2				
772	T8077S440	.....NUTPLATE SUPPLIER CODE: V11815 SPECIFICATION NUMBER: BACN10JP04B OPTIONAL PART: MK2000-04BAC V15653 NS103198-40 V80539 RMA9207M40 V72962 VN201A1-40L V92215 BRM100A04L V52828 ATTACHING PARTS	121503 904949	1
- 774	BACR15BA3AD	.....RIVET- SIZE DETERMINED ON INSTL. -------*-------	121503 904949	8
776	285T0439-17	.....SUPPORT- SUPPLIER CODE: V89954	121503 904949	1
778	285T0439-5	....CHASSIS- SUPPLIER CODE: V89954	121503 904949	1
780	285T0553-4	.PANEL ASSY-ILS CONT SUPPLIER CODE: V89954 ELECTRICAL EQUIP NUMBER: M00087 COMPONENT MAINT MANUAL REF: 34-31-61 FOR OTHER SYS DETAILS SEE: 11-31-05-01 33-13-58-01 34-31-02-01	121503 904949	1
780	285T0553-1	.PANEL ASSY-ILS CONT SUPPLIER CODE: V89954 ELECTRICAL EQUIP NUMBER: M00087 COMPONENT MAINT MANUAL REF: 34-31-61 FOR OTHER SYS DETAILS SEE: 11-31-05-01 33-13-58-01 34-31-02-01	121503 904949	1

MISSING ITEM NUMBERS NOT APPLICABLE

- ITEM NOT ILLUSTRATED

BOEING PROPRIETARY - Copyright © - Unpublished Work - See title page for details.

FIG ITEM	PART NUMBER	1 2 3 4 5 6 7 NOMENCLATURE	EFFECT FROM TO	UNITS PER ASSY
2				
780	285T0553-2	.PANEL ASSY-ILS CONT SUPPLIER CODE: V89954 ELECTRICAL EQUIP NUMBER: M00087 COMPONENT MAINT MANUAL REF: 34-31-61 FOR OTHER SYS DETAILS SEE: 11-31-05-01 33-13-58-01 34-31-02-01	121503 904949	1
780	285T0553-3	.PANEL ASSY-ILS CONT SUPPLIER CODE: V89954 ELECTRICAL EQUIP NUMBER: M00087 FOR OTHER SYS DETAILS SEE: 11-31-05-01 33-13-58-01 34-31-02-01	121503 904949	1
782	BAC27TEX3465	..MARKER-ALUMINUM FOIL SUPPLIER CODE: V89954 QUALIFIED OPTIONAL DATA: BAC27TEX3465 OR BAC27TEX4173 OR BAC27TEX4812 ARE ALL OPT WHEN USED WITH ASSOCIATED ITEMS USED ON: 285T0553-4	121503 904949	1
782	BAC27TEX3465	..MARKER-ALUMINUM FOIL SUPPLIER CODE: V89954 USED ON: 285T0553-1 285T0553-2 285T0553-3	121503 904949	1
784	BAC27TEX4173	..MARKER-ALUMINUM FOIL SUPPLIER CODE: V89954 QUALIFIED OPTIONAL DATA: BAC27TEX3465 OR BAC27TEX4173 OR BAC27TEX4812 ARE ALL OPT WHEN USED WITH ASSOCIATED ITEMS USED ON: 285T0553-4	121503 904949	1

MISSING ITEM NUMBERS NOT APPLICABLE

– ITEM NOT ILLUSTRATED

BOEING PROPRIETARY - Copyright © - Unpublished Work - See title page for details.

FIG ITEM	PART NUMBER	1 2 3 4 5 6 7 NOMENCLATURE	EFFECT FROM TO	UNITS PER ASSY
2				
786	BAC27TEX4812	..MARKER-ALUMINUM FOIL SUPPLIER CODE: V89954 QUALIFIED OPTIONAL DATA: BAC27TEX3465 OR BAC27TEX4173 OR BAC27TEX4812 ARE ALL OPT WHEN USED WITH ASSOCIATED ITEMS USED ON: 285T0553-4	121503 904949	1
788	MS35206-202	..SCREW	121503 904949	4
790	NAS514P440-4P	..SCREW	121503 904949	4
792	NAS514P440-5P	..SCREW	121503 904949	12
794	NAS1801-04-5	..SCREW	121503 904949	6
796	MS35338-40	..WASHER	121503 904949	2
798	AN960-4L	..WASHER	121503 904949	2
800	WCS225-7	..SEAL ASSY-SHAFT SUPPLIER CODE: V51074	121503 904949	2
802	285T0580-1	..GASKET-LCD MODULE SUPPLIER CODE: V89954 QUALIFIED OPTIONAL DATA: 285T0580-1 OPT TO 285T0580-2 WHEN USED WITH ASSOCIATED ITEMS USED ON: 285T0553-4	121503 904949	2
802	285T0580-1	..GASKET-LCD MODULE SUPPLIER CODE: V89954 USED ON: 285T0553-1 285T0553-2 285T0553-3	121503 904949	2

MISSING ITEM NUMBERS NOT APPLICABLE

– ITEM NOT ILLUSTRATED

BOEING PROPRIETARY - Copyright © - Unpublished Work - See title page for details.

FIG ITEM	PART NUMBER	1 2 3 4 5 6 7 NOMENCLATURE	EFFECT FROM TO	UNITS PER ASSY
2				
804	285T0580-2	..GASKET ASSY-LCD MODULE SUPPLIER CODE: V89954 QUALIFIED OPTIONAL DATA: 285T0580-1 OPT TO 285T0580-2 WHEN USED WITH ASSOCIATED ITEMS USED ON: 285T0553-4	121503 904949	2
806	285T1151-1	..GASKET- SUPPLIER CODE: V89954 QUALIFIED OPTIONAL DATA: 285T1151-1 OPT TO 285T1151-2 WHEN USED WITH ASSOCIATED ITEMS USED ON: 285T0553-4	121503 904949	2
806	285T1151-2	..GASKET- SUPPLIER CODE: V89954 QUALIFIED OPTIONAL DATA: 285T1151-1 OPT TO 285T1151-2 WHEN USED WITH ASSOCIATED ITEMS USED ON: 285T0553-4	121503 904949	2
808	285T0549-1	..COVER ASSY- SUPPLIER CODE: V89954	121503 904949	2
810	285T0548-1	..PANEL ASSY-FRONT SUPPLIER CODE: V89954	121503 904949	1
812	BACS21DD1B	...STUD ASSY SUPPLIER CODE: V08524 SPECIFICATION NUMBER: BACS21DD1B	121503 904949	4
814	SF6G6CBB5D	...NUT SUPPLIER CODE: V12324 SPECIFICATION NUMBER: BACN10PA06-6	121503 904949	2
816	U256-1	...NUT-PRESS SUPPLIER CODE: V46384	121503 904949	8
818	285T0548-11	...PANEL- SUPPLIER CODE: V89954	121503 904949	1

MISSING ITEM NUMBERS NOT APPLICABLE

– ITEM NOT ILLUSTRATED

BOEING PROPRIETARY - Copyright © - Unpublished Work - See title page for details.

FIG ITEM	PART NUMBER	1 2 3 4 5 6 7 NOMENCLATURE	EFFECT FROM TO	UNITS PER ASSY
2				
820	285T0550-1	..PANEL ASSY-SIDE SUPPLIER CODE: V89954 OPTIONAL PART: 285T0550-9 V89954 285T0550-13 V89954	121503 904949	1
820	285T0550-9	..PANEL ASSY-SIDE SUPPLIER CODE: V89954 OPTIONAL PART: 285T0550-1 V89954 285T0550-13 V89954	121503 904949	1
820	285T0550-14	..PANEL ASSY-SIDE SUPPLIER CODE: V89954 OPTIONAL PART: 285T0550-2 V89954 285T0550-10 V89954	121503 904949	1
822	285T0550-2	..PANEL ASSY-SIDE SUPPLIER CODE: V89954 OPTIONAL PART: 285T0550-10 V89954 285T0550-14 V89954	121503 904949	1
822	285T0550-10	..PANEL ASSY-SIDE SUPPLIER CODE: V89954 OPTIONAL PART: 285T0550-2 V89954 285T0550-14 V89954	121503 904949	1
822	285T0550-14	..PANEL ASSY-SIDE SUPPLIER CODE: V89954 OPTIONAL PART: 285T0550-2 V89954 285T0550-10 V89954	121503 904949	1

MISSING ITEM NUMBERS NOT APPLICABLE

– ITEM NOT ILLUSTRATED

BOEING PROPRIETARY - Copyright © - Unpublished Work - See title page for details.

FIG ITEM	PART NUMBER	1 2 3 4 5 6 7 NOMENCLATURE	EFFECT FROM TO	UNITS PER ASSY
2				
824	FE0440EF	...NUT-PRESS SUPPLIER CODE: V46384	121503 904949	2
826	FE0440EF	...NUT-PRESS SUPPLIER CODE: V46384 USED ON: 285T0550-9 285T0550-13 285T0550-10 285T0550-14	121503 904949	4
826	FE0X440	...NUT-PRESS SUPPLIER CODE: V46384 USED ON: 285T0550-1 285T0550-2	121503 904949	4
828	LAC440-1	...NUT-PRESS SUPPLIER CODE: V46384 USED ON: 285T0550-1 285T0550-9 285T0550-2 285T0550-10	121503 904949	4
830	BACN10XR04	...NUTPLATE- USED ON: 285T0550-13 285T0550-14 ATTACHING PARTS	121503 904949	4
- 832	BACR15BA2AD	...RIVET- SIZE DETERMINED ON INSTL. -------*-------	121503 904949	8
834	F22A27M22-40	...NUT-ANCHOR SUPPLIER CODE: V0217B	121503 904949	2
- 836	BACR15BA2AD	...RIVET- SIZE DETERMINED ON INSTL.	121503 904949	4
838	285T0550-5	...PANEL- SUPPLIER CODE: V89954 USED ON: 285T0550-1 285T0550-9	121503 904949	1
838	285T0550-17	...PANEL- SUPPLIER CODE: V89954 USED ON: 285T0550-13	121503 904949	1

MISSING ITEM NUMBERS NOT APPLICABLE

- ITEM NOT ILLUSTRATED

BOEING PROPRIETARY - Copyright © - Unpublished Work - See title page for details.

FIG ITEM	PART NUMBER	1 2 3 4 5 6 7 NOMENCLATURE	EFFECT FROM TO	UNITS PER ASSY
2				
840	285T0550-6	...PANEL- SUPPLIER CODE: V89954 USED ON: 285T0550-2 285T0550-10	121503 904949	1
840	285T0550-18	...PANEL- SUPPLIER CODE: V89954 USED ON: 285T0550-14	121503 904949	1
842	285T0558-3	..MODULE ASSY-ELECT. SUPPLIER CODE: V89954 QUALIFIED OPTIONAL DATA: 285T0558-3 OPT TO 285T0558-10 WHEN USED WITH ASSOCIATED ITEMS USED ON: 285T0553-4	121503 904949	1
842	285T0558-10	..MODULE ASSY-ELECT. SUPPLIER CODE: V89954 QUALIFIED OPTIONAL DATA: 285T0558-3 OPT TO 285T0558-10 WHEN USED WITH ASSOCIATED ITEMS USED ON: 285T0553-4	121503 904949	1
842	285T0558-1	..MODULE ASSY-ELECT. SUPPLIER CODE: V89954 USED ON: 285T0553-4	121503 904949	1
842	285T0558-2	..MODULE ASSY-ELECT. SUPPLIER CODE: V89954 USED ON: 285T0553-4	121503 904949	1
842	285T0558-1	..MODULE ASSY-ELECT. SUPPLIER CODE: V89954 USED ON: 285T0553-1 285T0553-3	121503 904949	1

MISSING ITEM NUMBERS NOT APPLICABLE

– ITEM NOT ILLUSTRATED

BOEING PROPRIETARY - Copyright © - Unpublished Work - See title page for details.

FIG ITEM	PART NUMBER	1 2 3 4 5 6 7 NOMENCLATURE	EFFECT FROM TO	UNITS PER ASSY
2				
842	285T0558-2	..MODULE ASSY-ELECT. SUPPLIER CODE: V89954 QUALIFIED OPTIONAL DATA: 285T0558-2 OPT TO 285T0558-9 WHEN USED WITH ASSOCIATED ITEMS USED ON: 285T0553-2	121503 904949	1
842	285T0558-9	..MODULE ASSY-ELECT. SUPPLIER CODE: V89954 QUALIFIED OPTIONAL DATA: 285T0558-2 OPT TO 285T0558-9 WHEN USED WITH ASSOCIATED ITEMS USED ON: 285T0553-2	121503 904949	1
842	285T0558-1	..MODULE ASSY-ELECT. SUPPLIER CODE: V89954 USED ON: 285T0553-2	121503 904949	1
844	285T0566-1	...PMD ASSY- SUPPLIER CODE: V89954	121503 904949	3
846	BAC27TEX2007	....DECAL- OPTIONAL PART: WHB673-1-0X0-5 V85480 DAT59-652 V85480	121503 904949	1
846	WHB673-1-0X0-5	....DECAL- SUPPLIER CODE: V85480 OPTIONAL PART: BAC27TEX2007 DAT59-652 V85480	121503 904949	1
846	DAT59-652	....DECAL- SUPPLIER CODE: V85480 OPTIONAL PART: BAC27TEX2007 WHB673-1-0X0-5 V85480	121503 904949	1
848	285T0546-1	..PANEL-REAR SUPPLIER CODE: V89954	121503 904949	1

MISSING ITEM NUMBERS NOT APPLICABLE

– ITEM NOT ILLUSTRATED

BOEING PROPRIETARY - Copyright © - Unpublished Work - See title page for details.

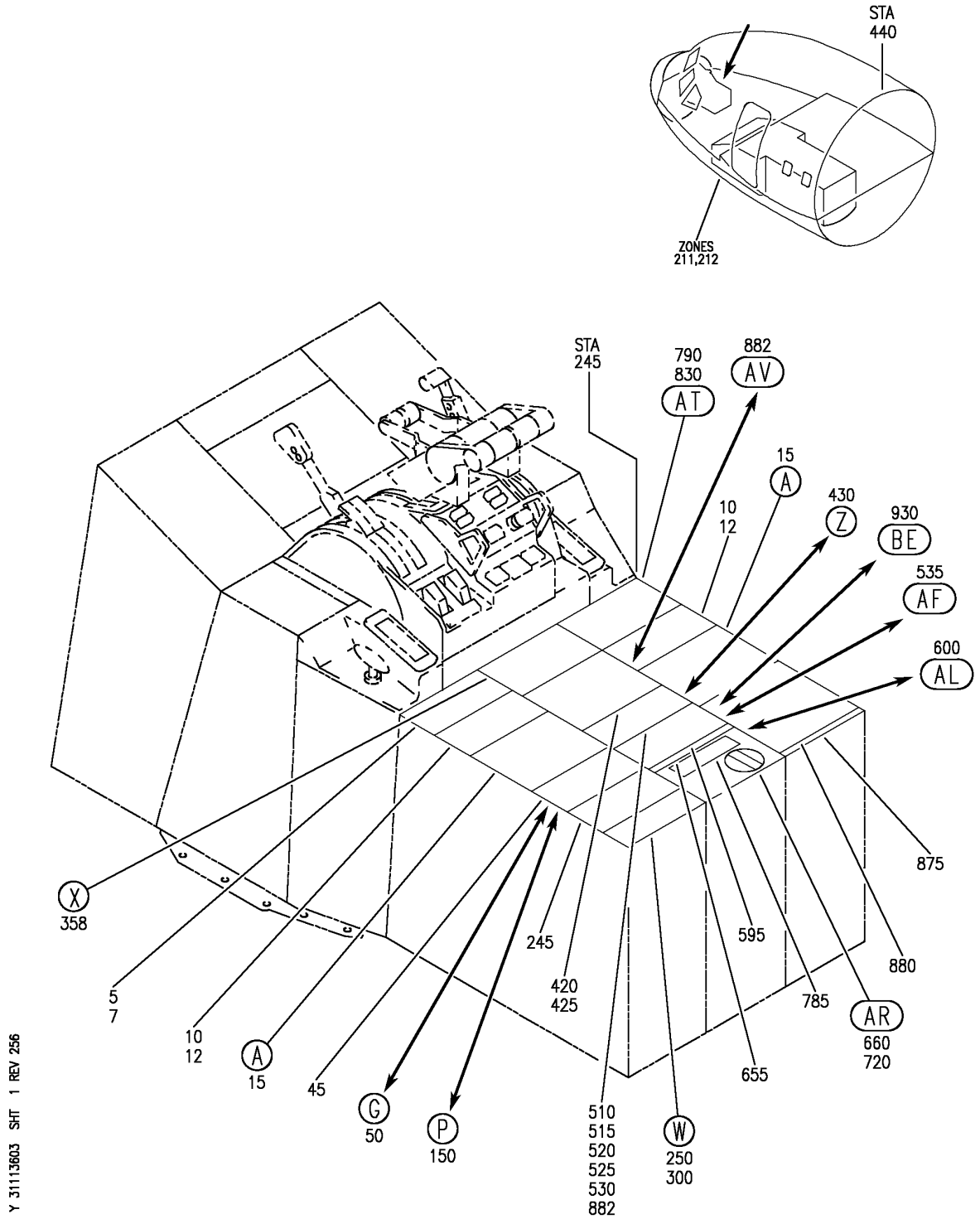

PANEL INSTL-P8 ELECTRONICS (CONTROL STAND AFT ELECTRONIC PANEL ONLY)
FIGURE 3 (SHEET 1)

BOEING PROPRIETARY - Copyright © - Unpublished Work - See title page for details.

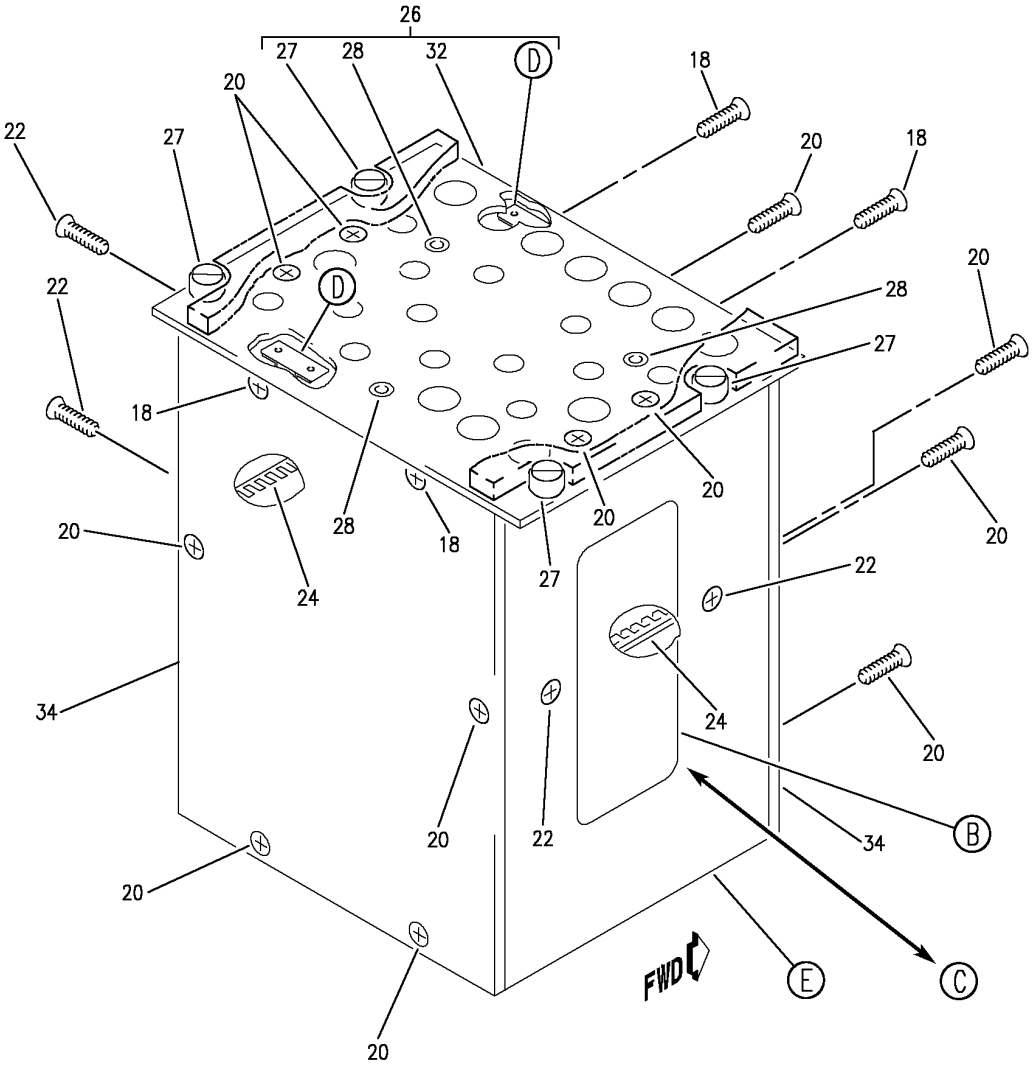

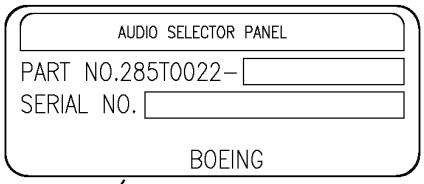

C

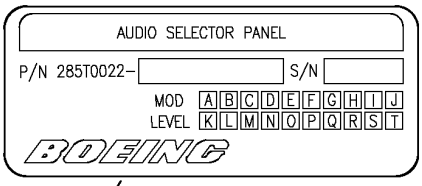

B

Y 31113603 SHT 2 REV 256

PANEL INSTL-P8 ELECTRONICS (CONTROL STAND AFT ELECTRONIC PANEL ONLY)
FIGURE 3 (SHEET 2)

BOEING PROPRIETARY - Copyright © - Unpublished Work - See title page for details.

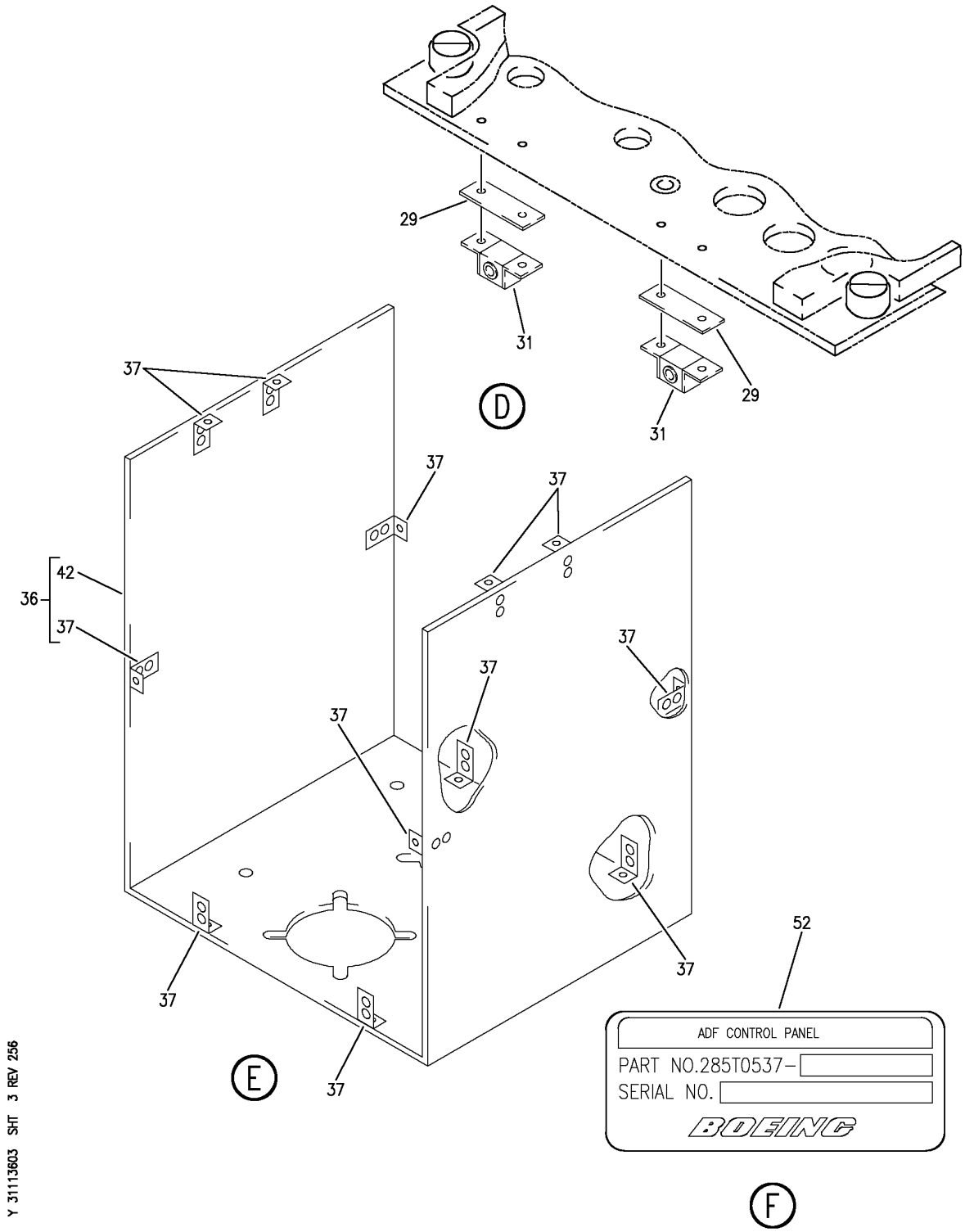

PANEL INSTL-P8 ELECTRONICS (CONTROL STAND AFT ELECTRONIC PANEL ONLY)
FIGURE 3 (SHEET 3)

BOEING PROPRIETARY - Copyright © - Unpublished Work - See title page for details.

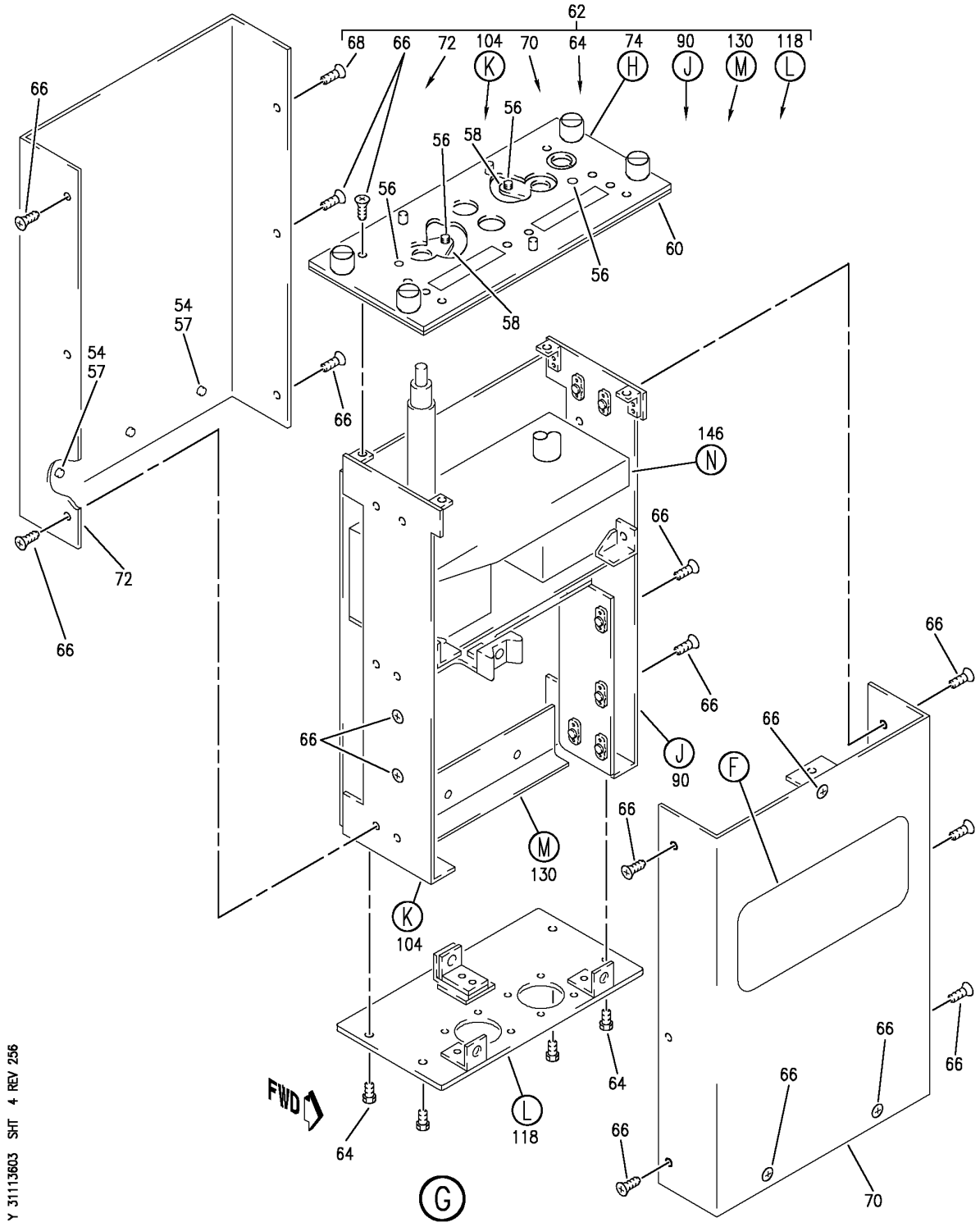

PANEL INSTL-P8 ELECTRONICS (CONTROL STAND AFT ELECTRONIC PANEL ONLY)
FIGURE 3 (SHEET 4)

BOEING PROPRIETARY - Copyright © - Unpublished Work - See title page for details.

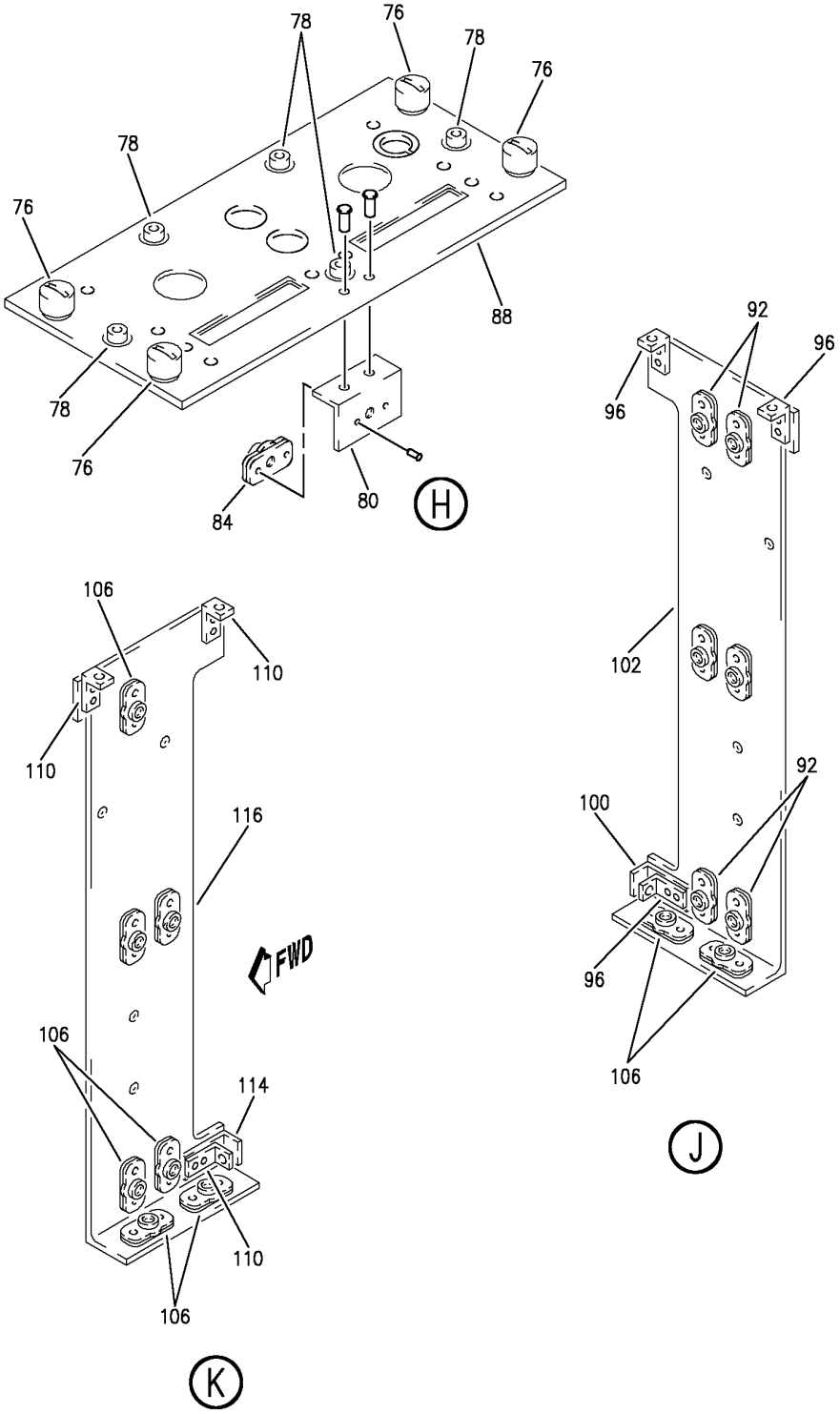

PANEL INSTL-P8 ELECTRONICS (CONTROL STAND AFT ELECTRONIC PANEL ONLY)
FIGURE 3 (SHEET 5)

BOEING PROPRIETARY - Copyright © - Unpublished Work - See title page for details.

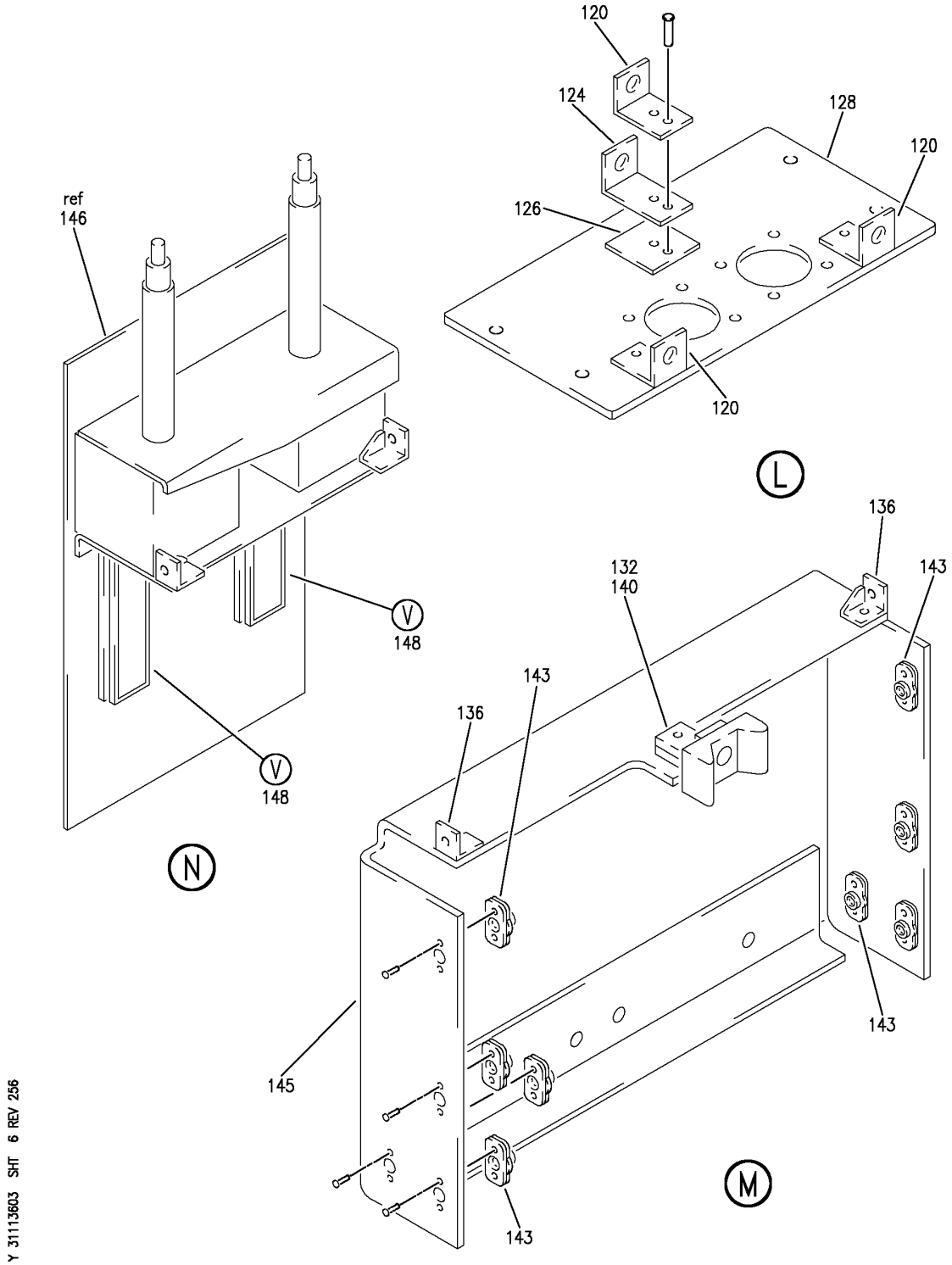

PANEL INSTL-P8 ELECTRONICS (CONTROL STAND AFT ELECTRONIC PANEL ONLY)
FIGURE 3 (SHEET 6)

BOEING PROPRIETARY - Copyright © - Unpublished Work - See title page for details.

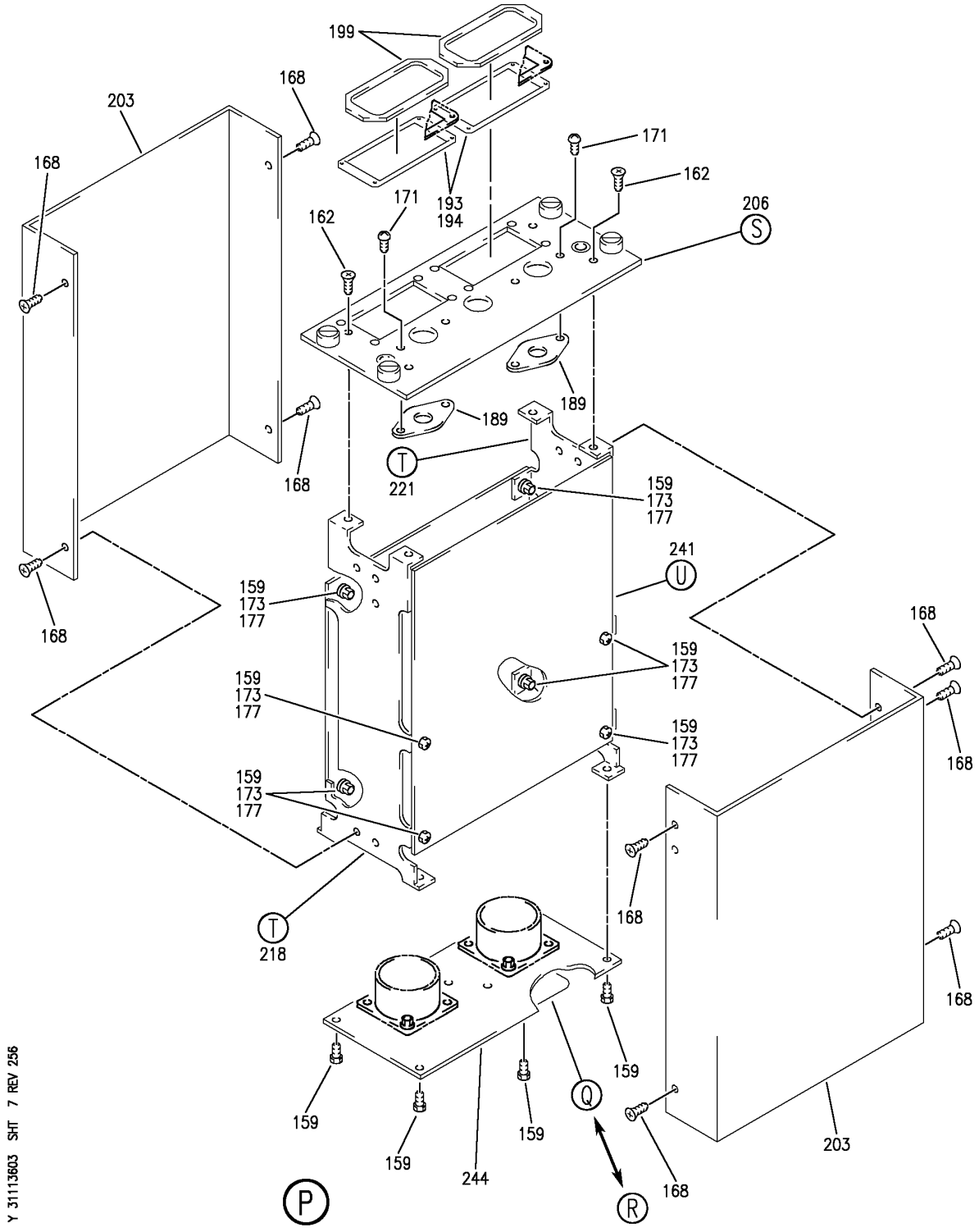

PANEL INSTL-P8 ELECTRONICS (CONTROL STAND AFT ELECTRONIC PANEL ONLY)
FIGURE 3 (SHEET 7)

BOEING PROPRIETARY - Copyright © - Unpublished Work - See title page for details.

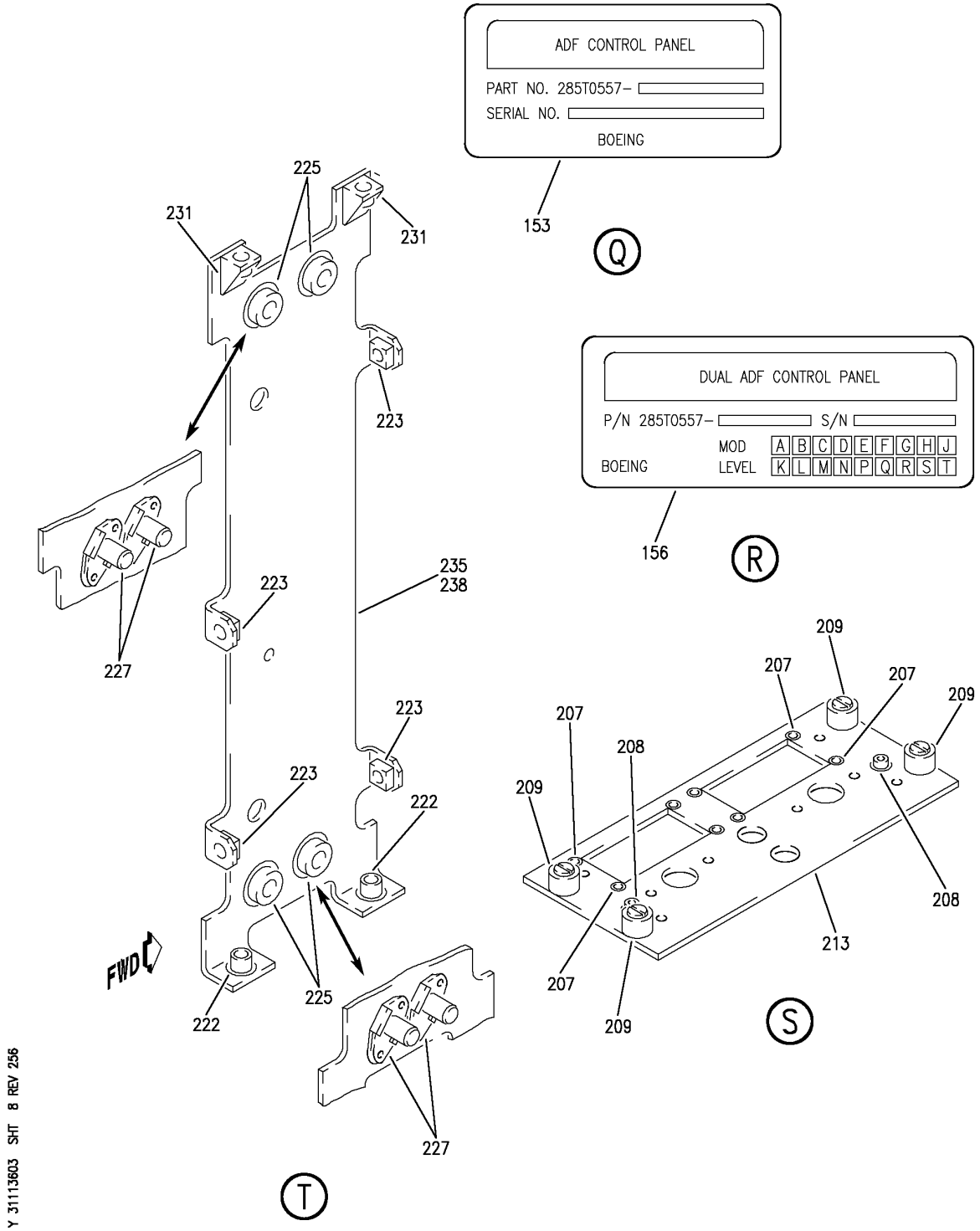

PANEL INSTL-P8 ELECTRONICS (CONTROL STAND AFT ELECTRONIC PANEL ONLY)
FIGURE 3 (SHEET 8)

BOEING PROPRIETARY - Copyright © - Unpublished Work - See title page for details.

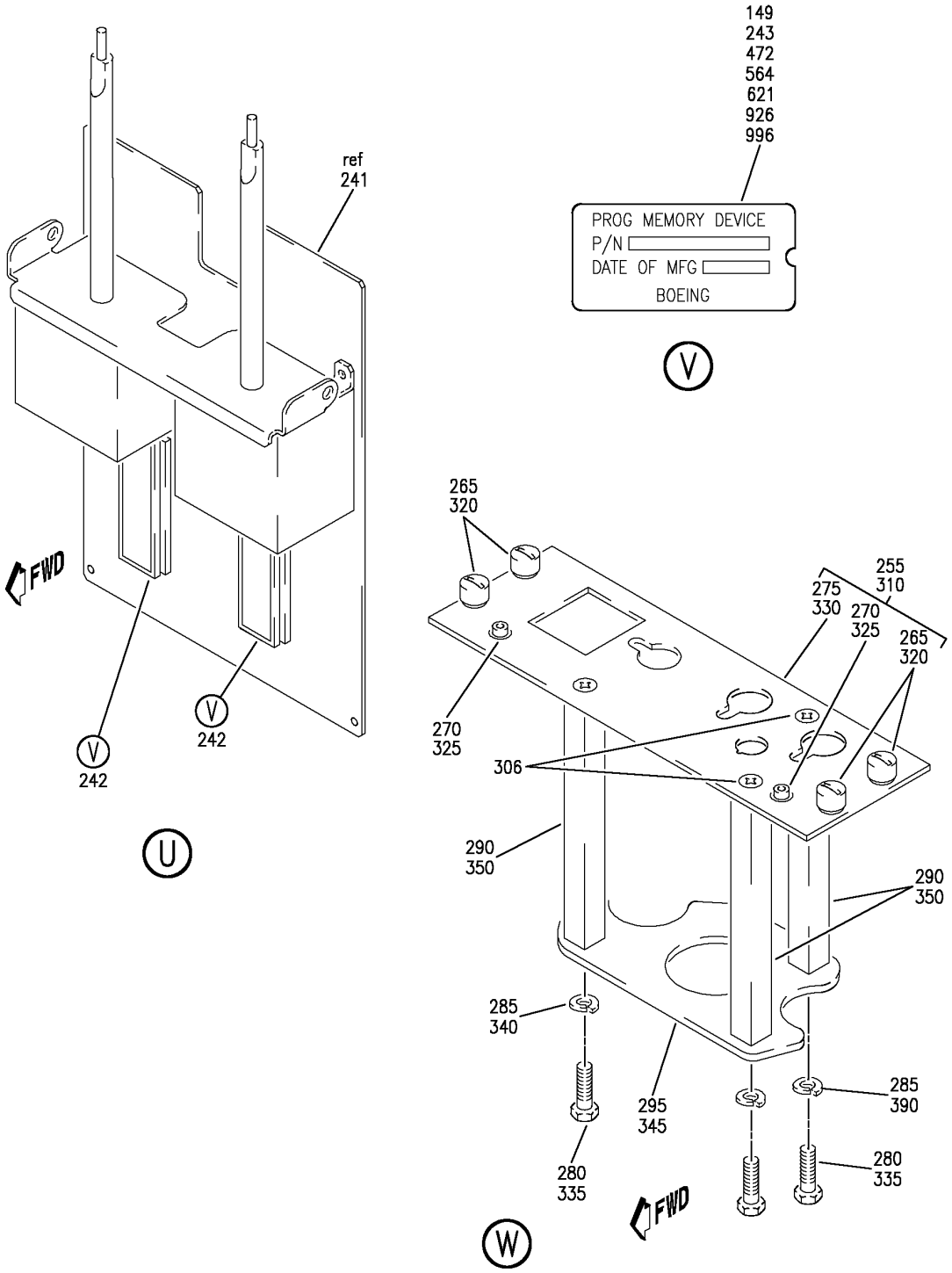

PANEL INSTL-P8 ELECTRONICS (CONTROL STAND AFT ELECTRONIC PANEL ONLY)
FIGURE 3 (SHEET 9)

BOEING PROPRIETARY - Copyright © - Unpublished Work - See title page for details.

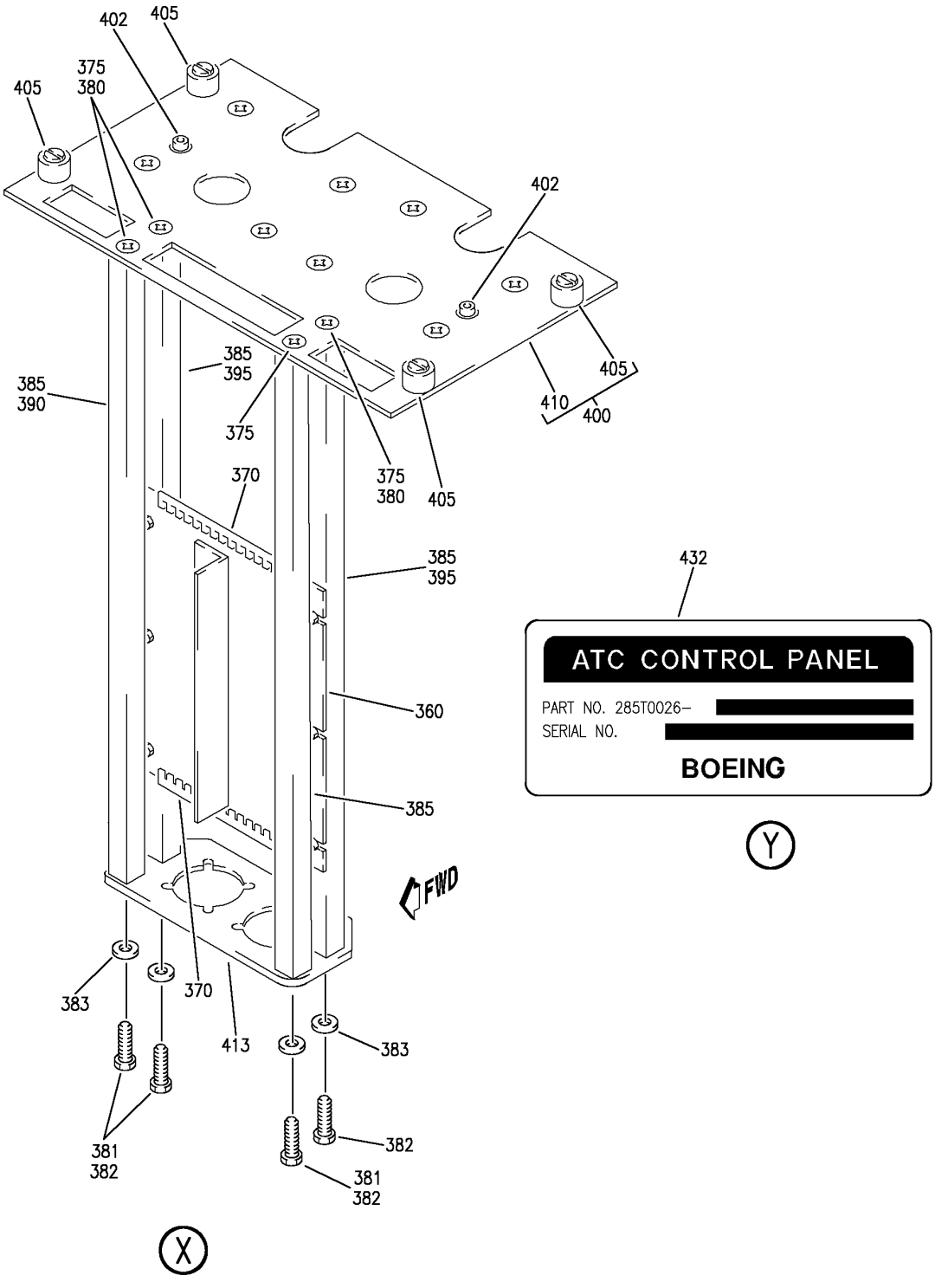

PANEL INSTL-P8 ELECTRONICS (CONTROL STAND AFT ELECTRONIC PANEL ONLY)
FIGURE 3 (SHEET 10)

BOEING PROPRIETARY - Copyright © - Unpublished Work - See title page for details.

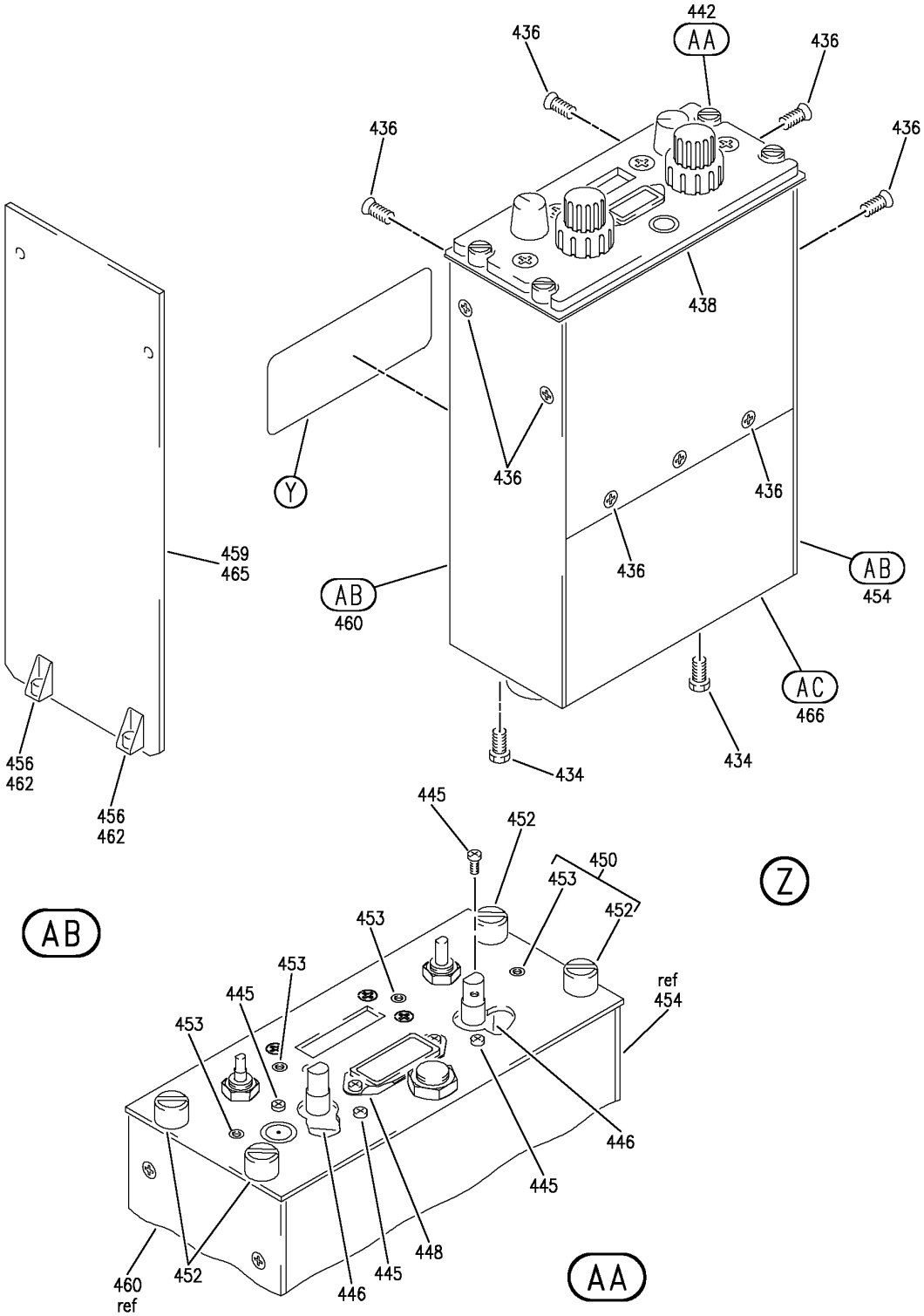

PANEL INSTL-P8 ELECTRONICS (CONTROL STAND AFT ELECTRONIC PANEL ONLY)
FIGURE 3 (SHEET 11)

BOEING PROPRIETARY - Copyright © - Unpublished Work - See title page for details.

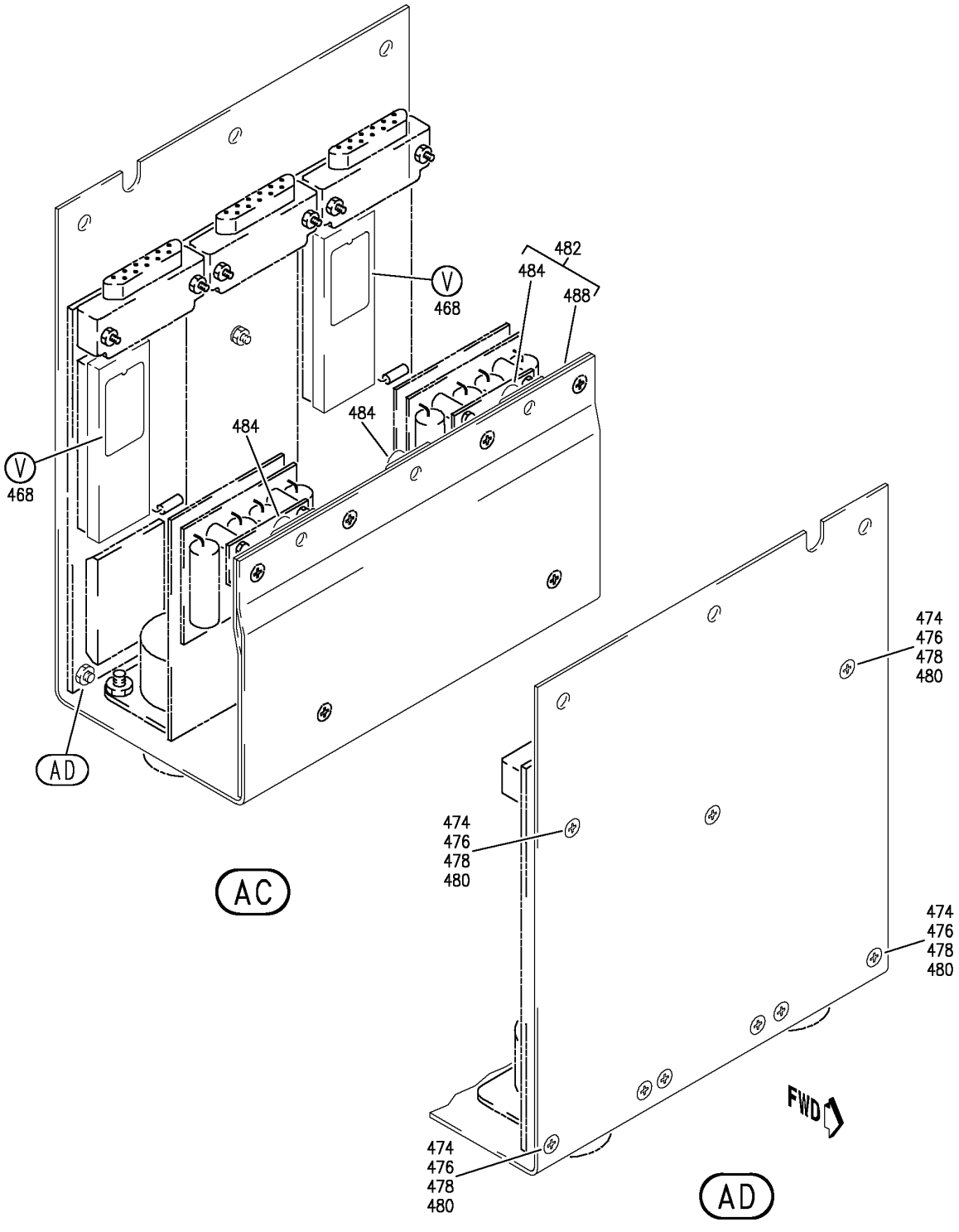

PANEL INSTL-P8 ELECTRONICS (CONTROL STAND AFT ELECTRONIC PANEL ONLY)
FIGURE 3 (SHEET 12)

BOEING PROPRIETARY - Copyright © - Unpublished Work - See title page for details.

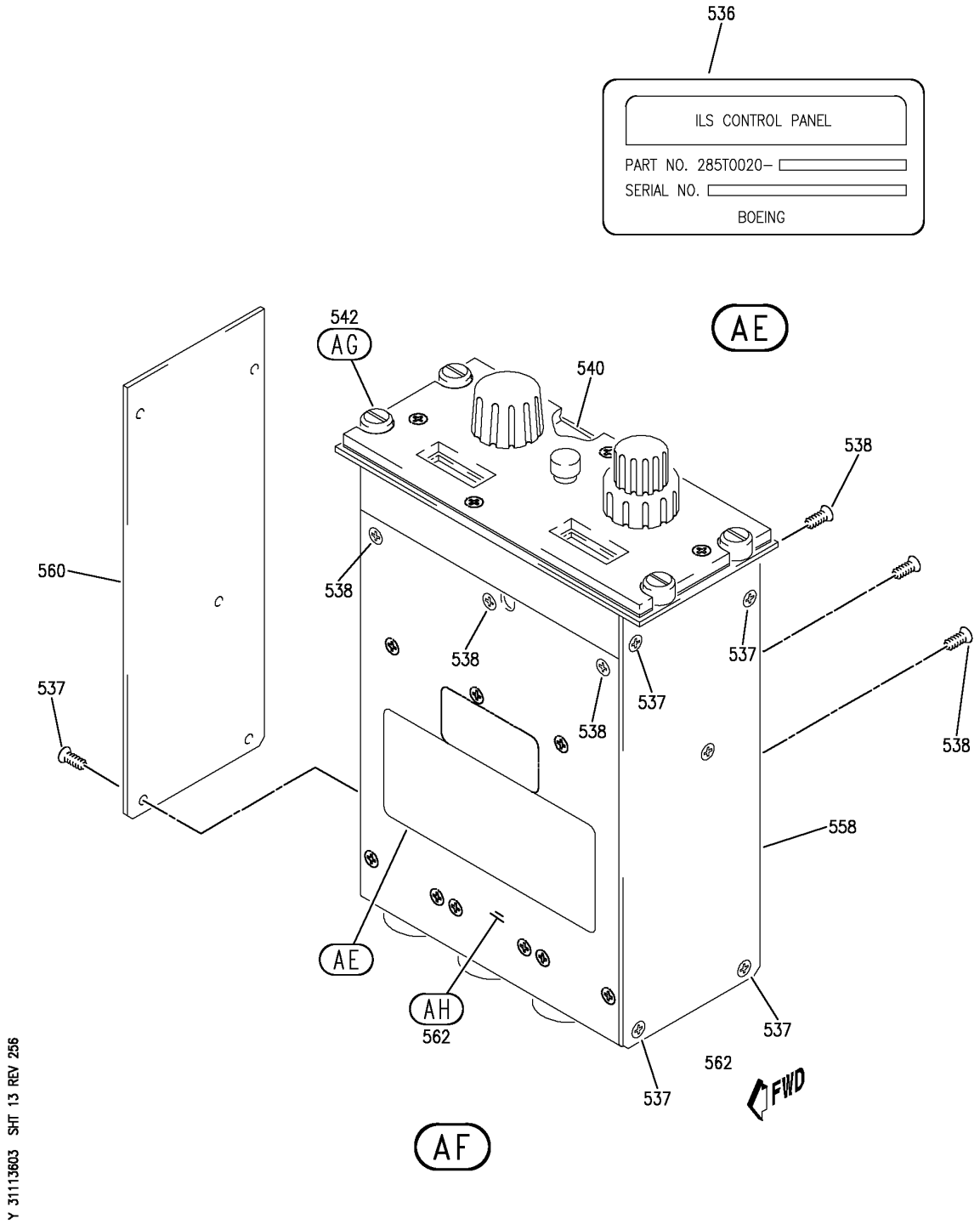

PANEL INSTL-P8 ELECTRONICS (CONTROL STAND AFT ELECTRONIC PANEL ONLY)
FIGURE 3 (SHEET 13)

BOEING PROPRIETARY - Copyright © - Unpublished Work - See title page for details.

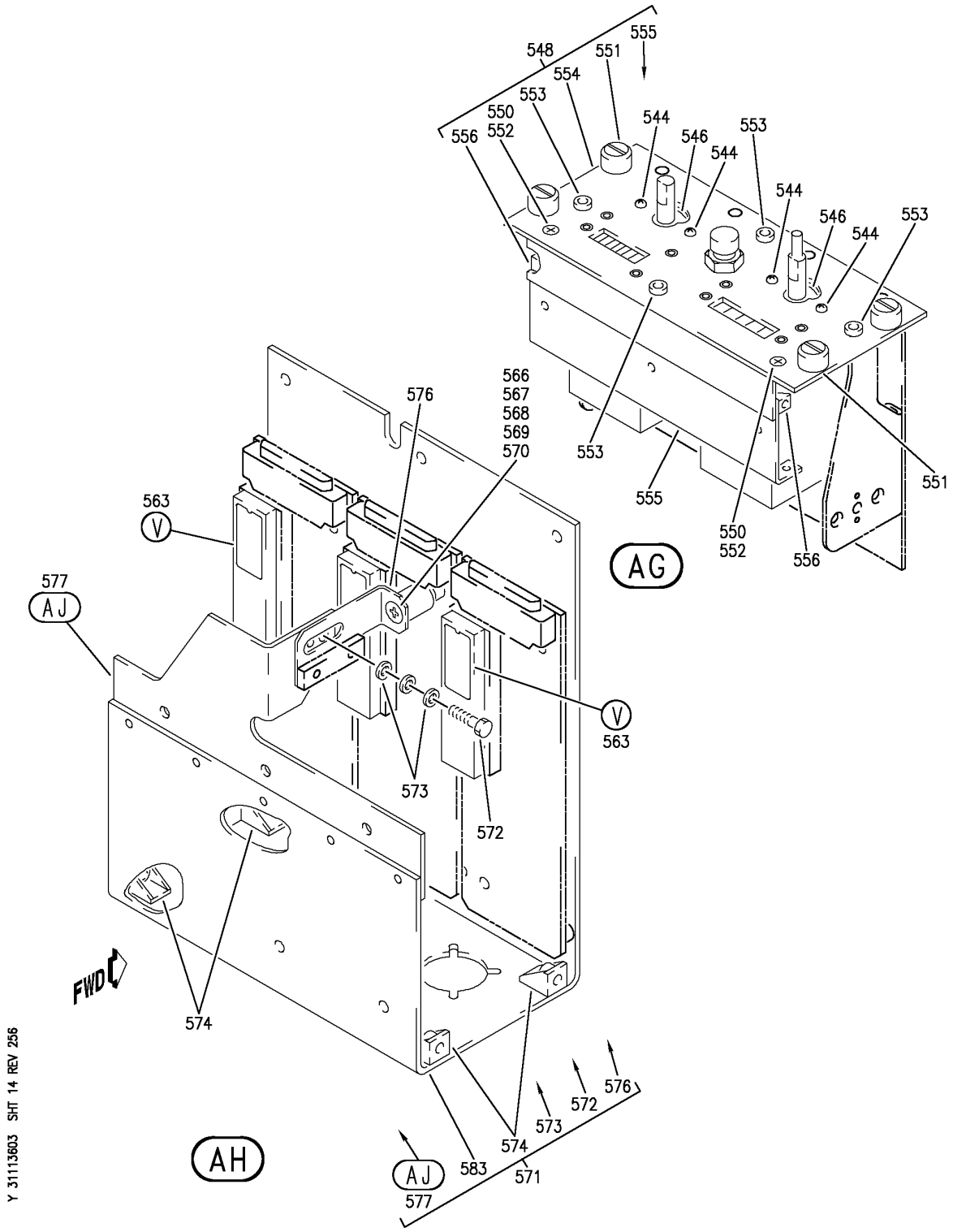

PANEL INSTL-P8 ELECTRONICS (CONTROL STAND AFT ELECTRONIC PANEL ONLY)
FIGURE 3 (SHEET 14)

BOEING PROPRIETARY - Copyright © - Unpublished Work - See title page for details.

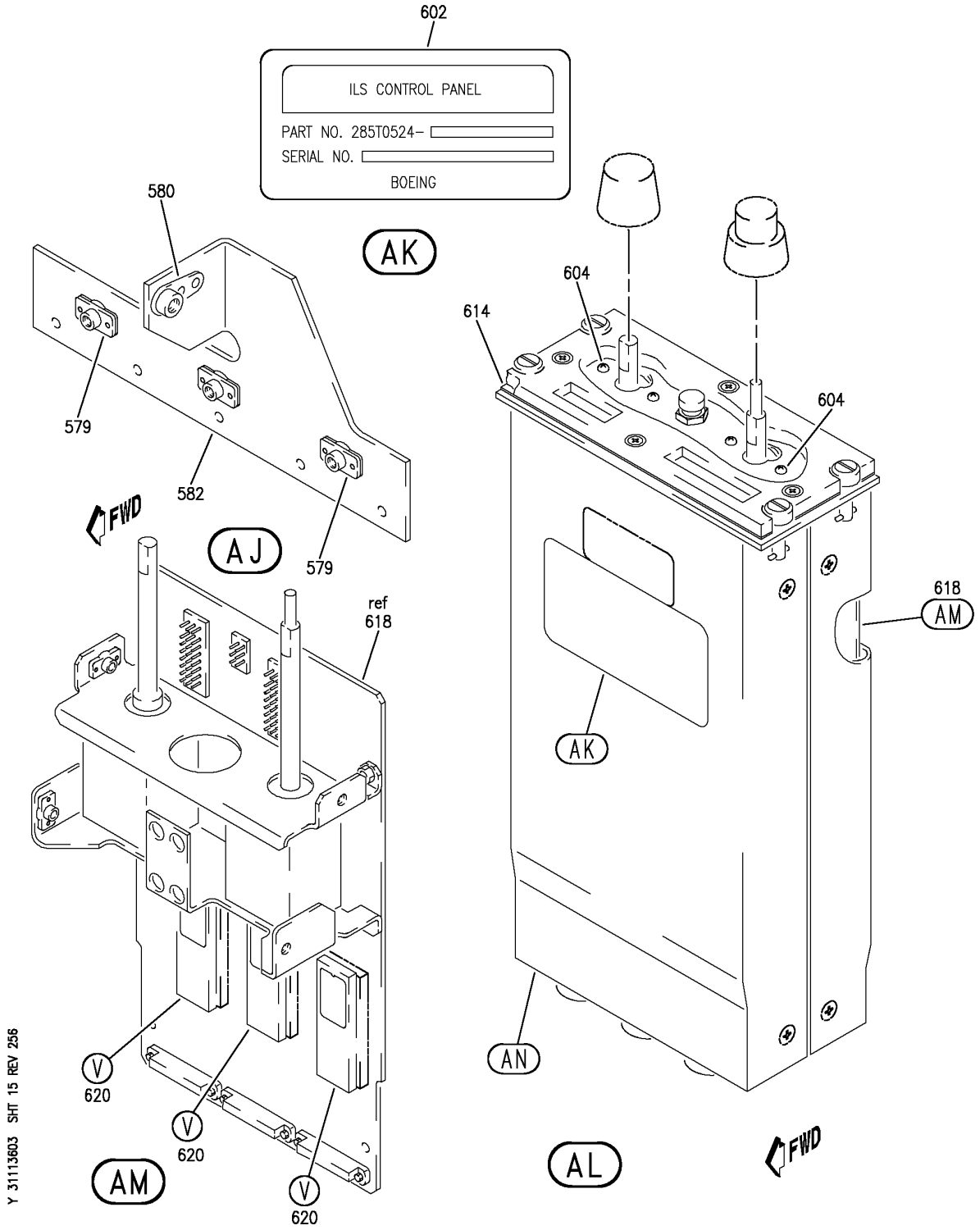

PANEL INSTL-P8 ELECTRONICS (CONTROL STAND AFT ELECTRONIC PANEL ONLY)
FIGURE 3 (SHEET 15)

BOEING PROPRIETARY - Copyright © - Unpublished Work - See title page for details.

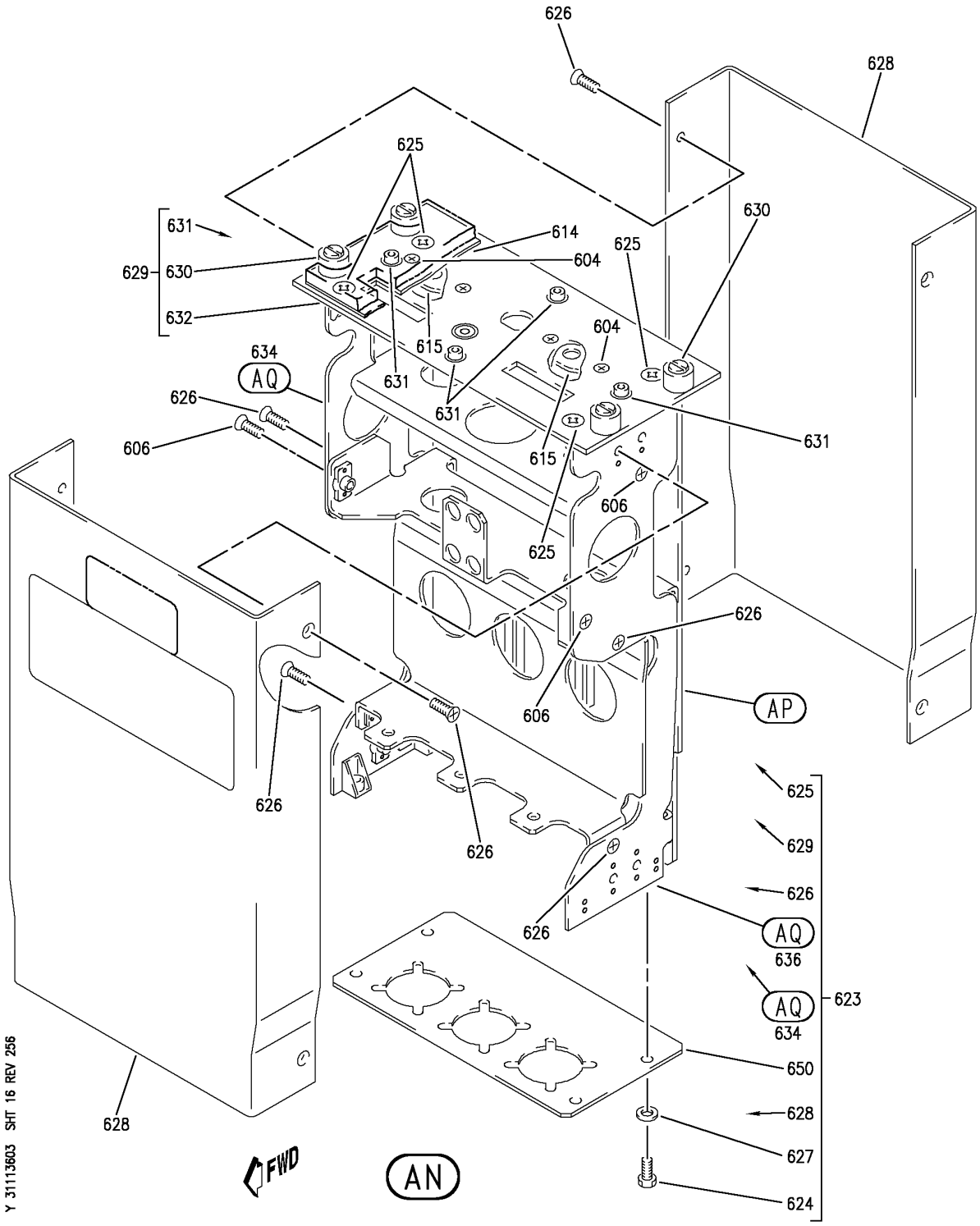

PANEL INSTL-P8 ELECTRONICS (CONTROL STAND AFT ELECTRONIC PANEL ONLY)
FIGURE 3 (SHEET 16)

BOEING PROPRIETARY - Copyright © - Unpublished Work - See title page for details.

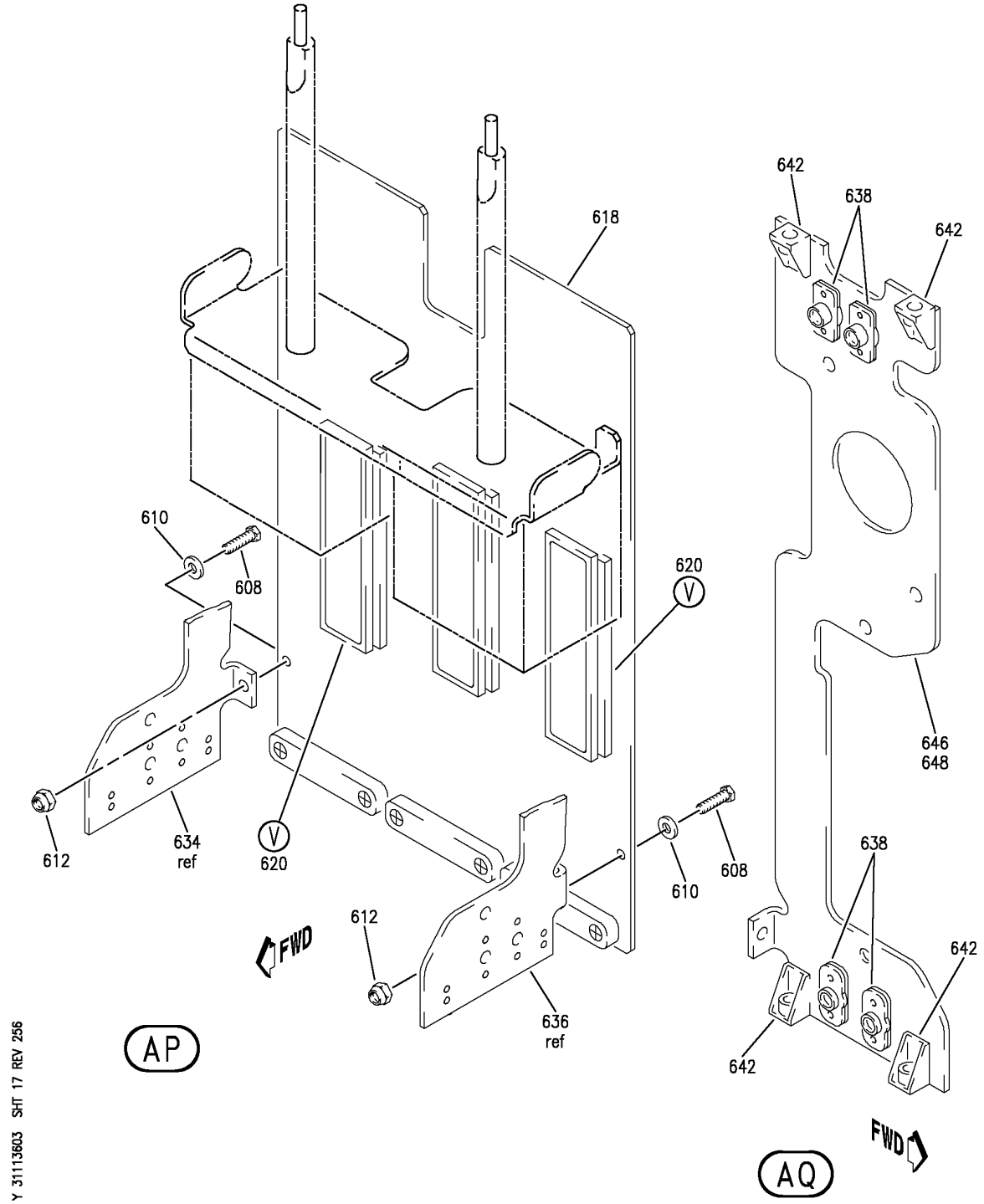

PANEL INSTL-P8 ELECTRONICS (CONTROL STAND AFT ELECTRONIC PANEL ONLY)
FIGURE 3 (SHEET 17)

BOEING PROPRIETARY - Copyright © - Unpublished Work - See title page for details.

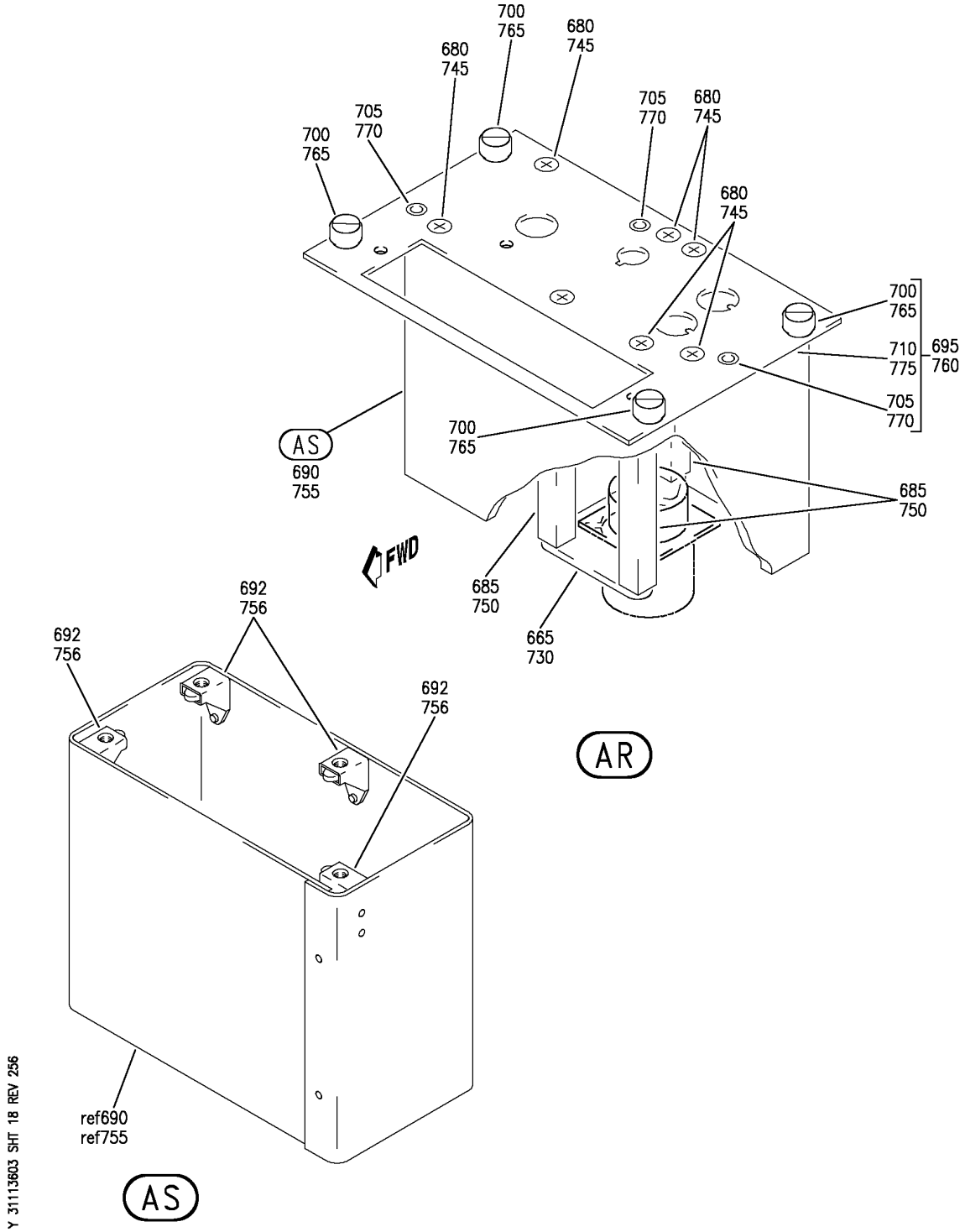

PANEL INSTL-P8 ELECTRONICS (CONTROL STAND AFT ELECTRONIC PANEL ONLY)
FIGURE 3 (SHEET 18)

BOEING PROPRIETARY - Copyright © - Unpublished Work - See title page for details.

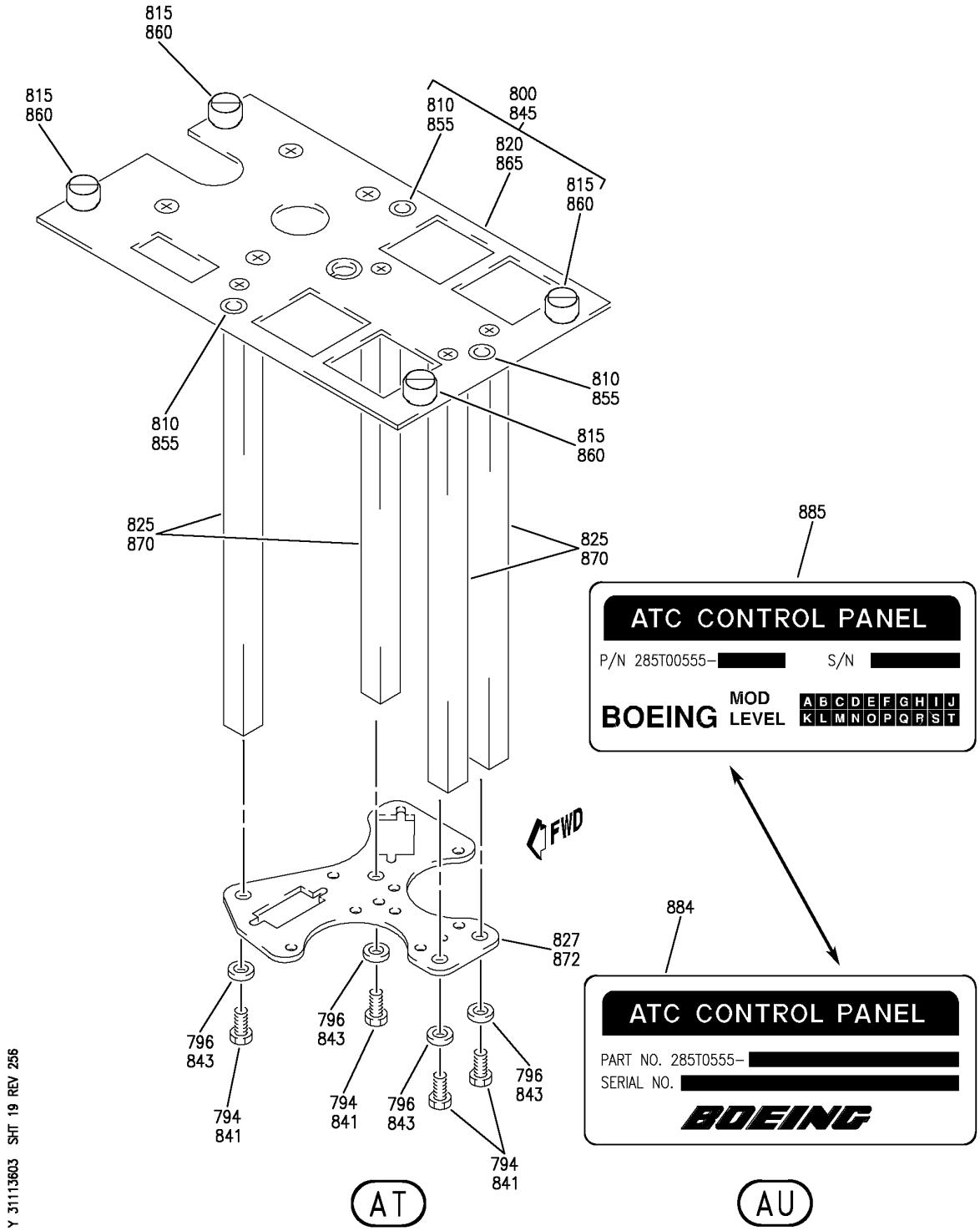

PANEL INSTL-P8 ELECTRONICS (CONTROL STAND AFT ELECTRONIC PANEL ONLY)
FIGURE 3 (SHEET 19)

BOEING PROPRIETARY - Copyright © - Unpublished Work - See title page for details.

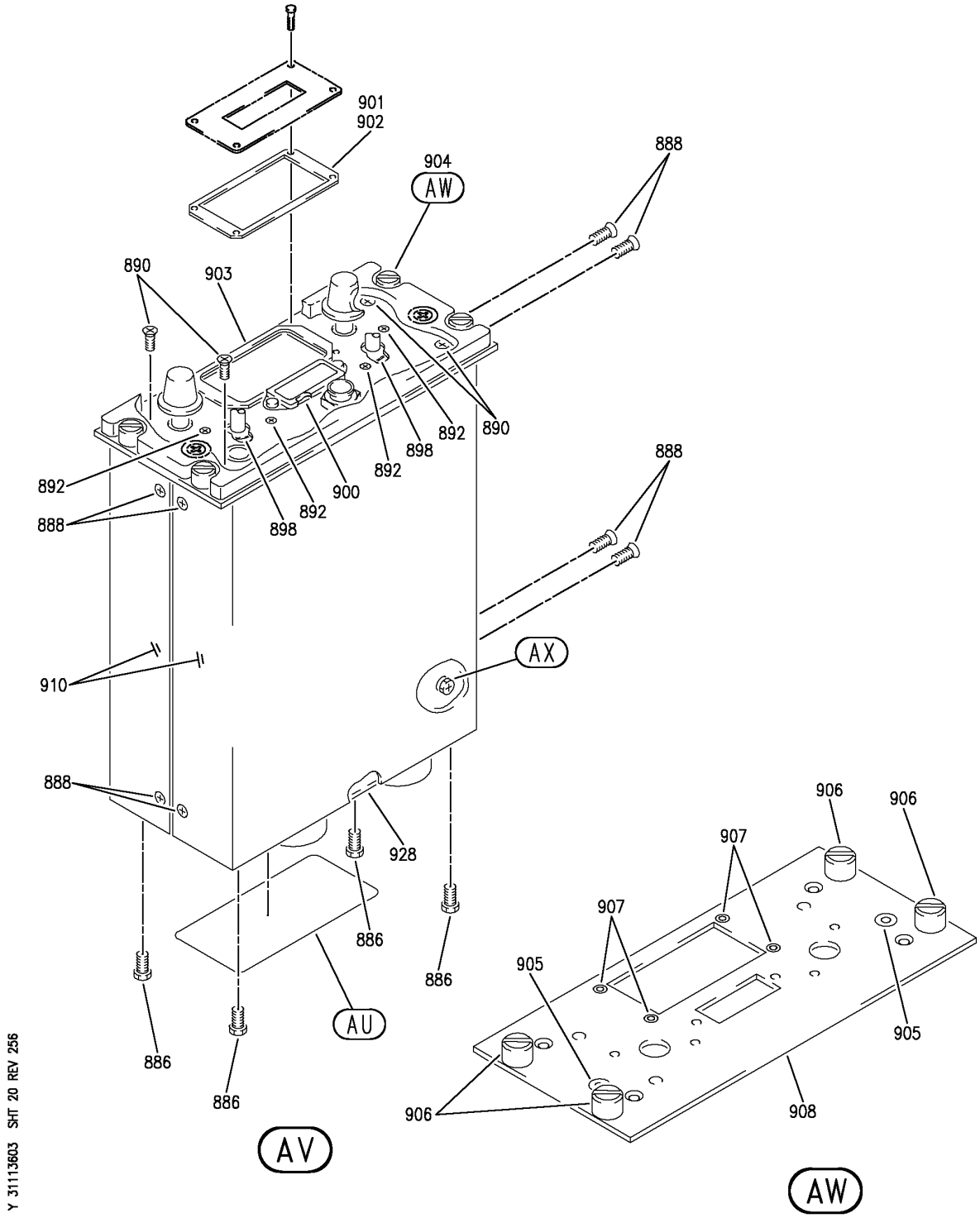

PANEL INSTL-P8 ELECTRONICS (CONTROL STAND AFT ELECTRONIC PANEL ONLY)
FIGURE 3 (SHEET 20)

BOEING PROPRIETARY - Copyright © - Unpublished Work - See title page for details.

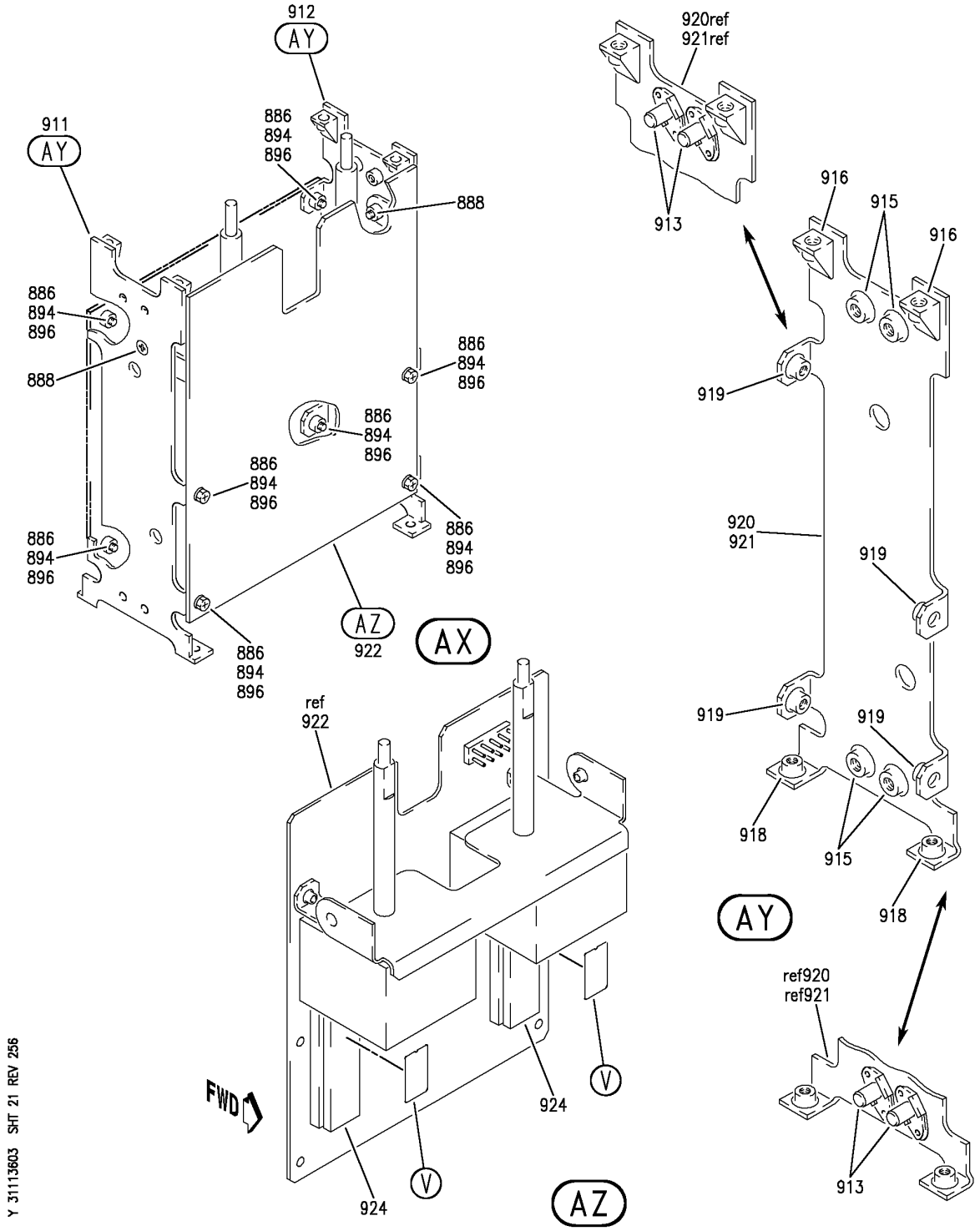

PANEL INSTL-P8 ELECTRONICS (CONTROL STAND AFT ELECTRONIC PANEL ONLY)
FIGURE 3 (SHEET 21)

BOEING PROPRIETARY - Copyright © - Unpublished Work - See title page for details.

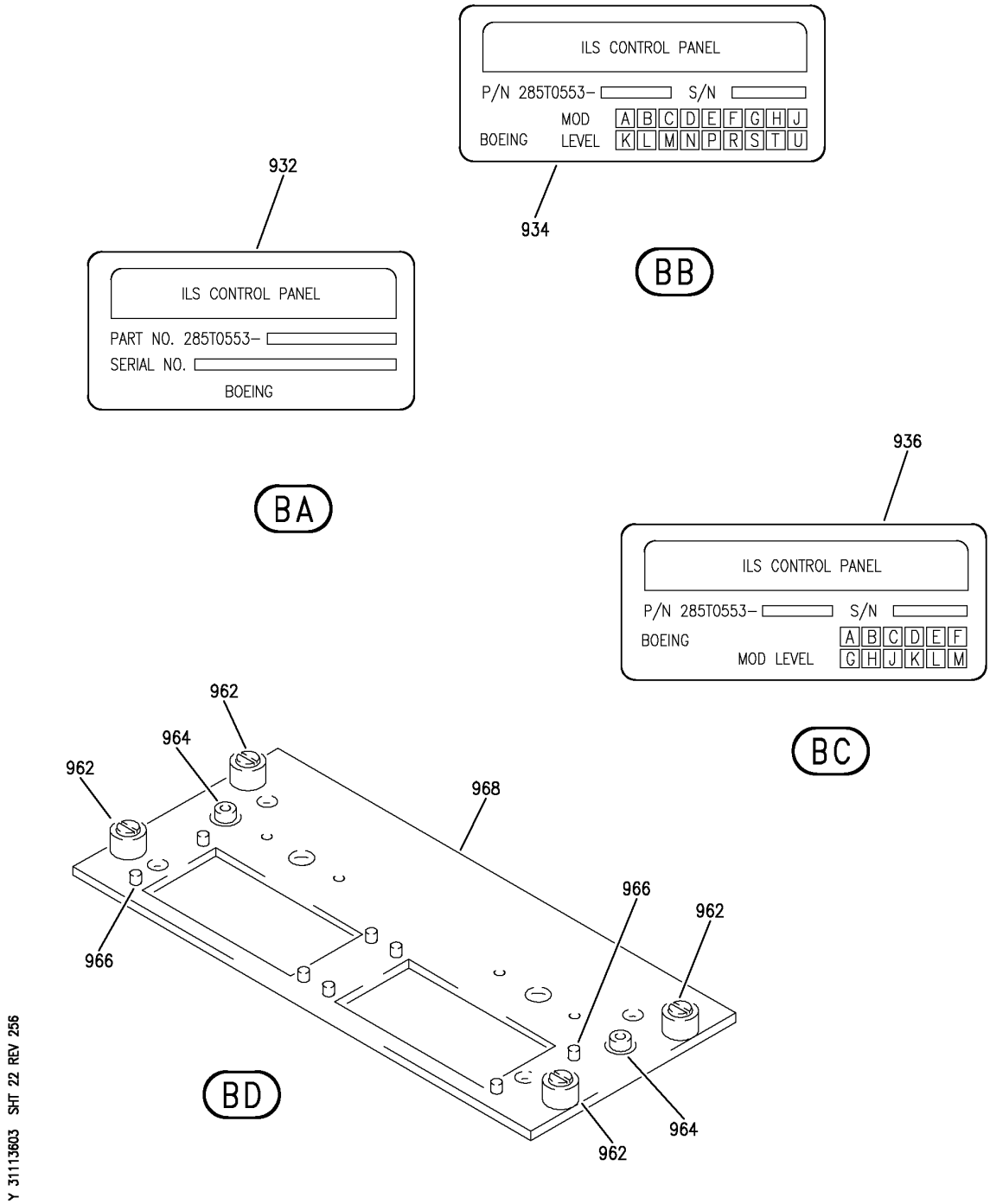

PANEL INSTL-P8 ELECTRONICS (CONTROL STAND AFT ELECTRONIC PANEL ONLY)
FIGURE 3 (SHEET 22)

BOEING PROPRIETARY - Copyright © - Unpublished Work - See title page for details.

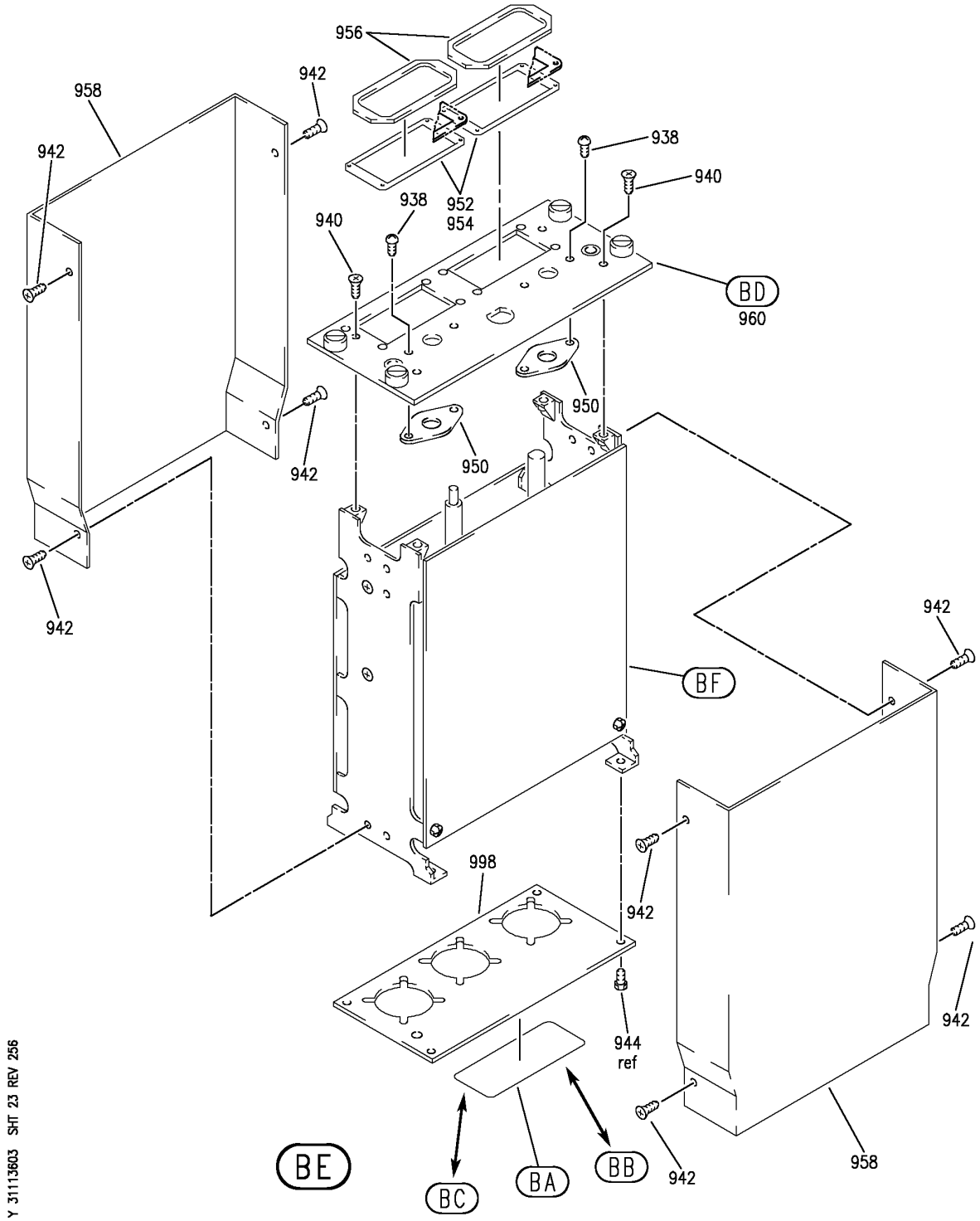

PANEL INSTL-P8 ELECTRONICS (CONTROL STAND AFT ELECTRONIC PANEL ONLY)
FIGURE 3 (SHEET 23)

BOEING PROPRIETARY - Copyright © - Unpublished Work - See title page for details.

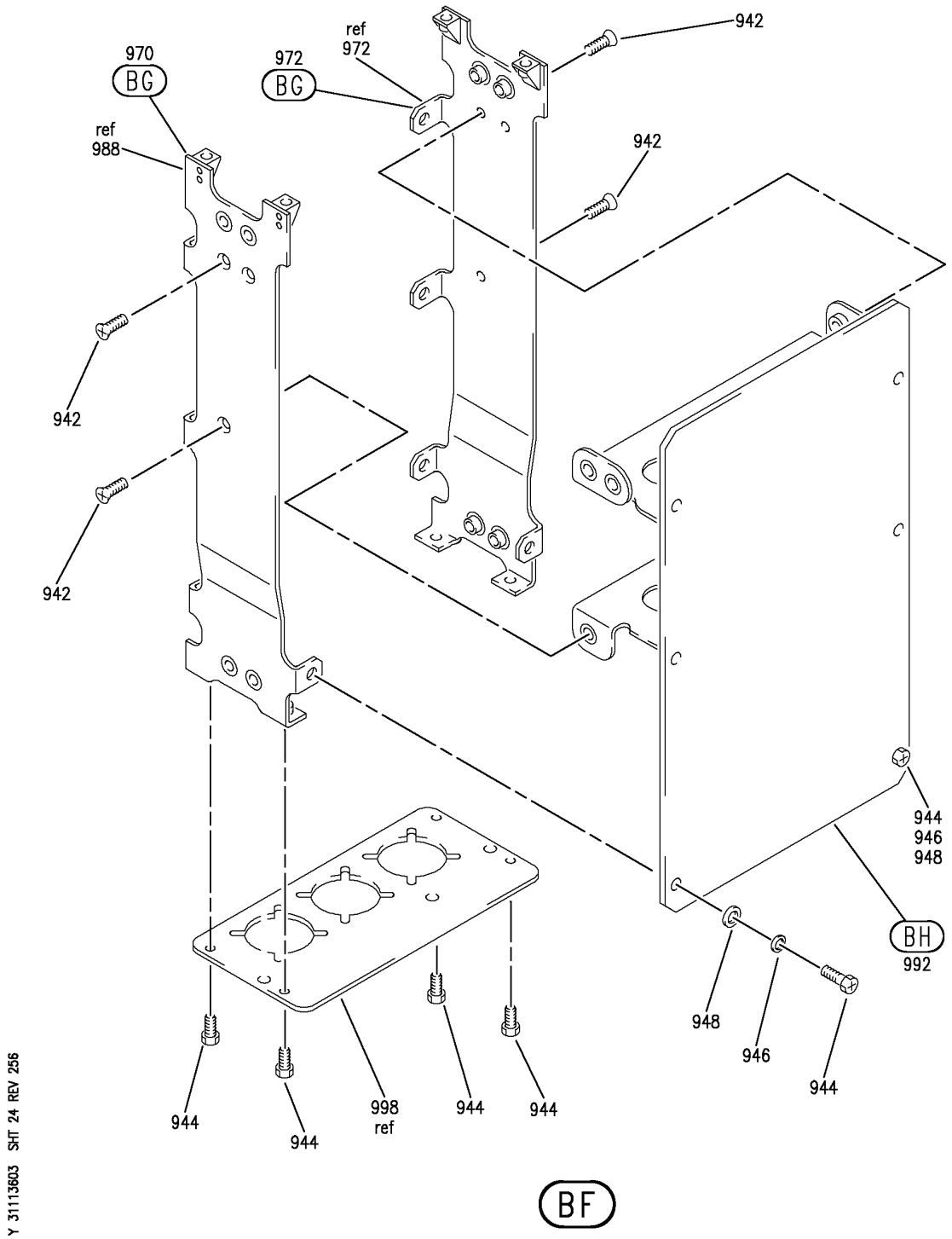

PANEL INSTL-P8 ELECTRONICS (CONTROL STAND AFT ELECTRONIC PANEL ONLY)
FIGURE 3 (SHEET 24)

BOEING PROPRIETARY - Copyright © - Unpublished Work - See title page for details.

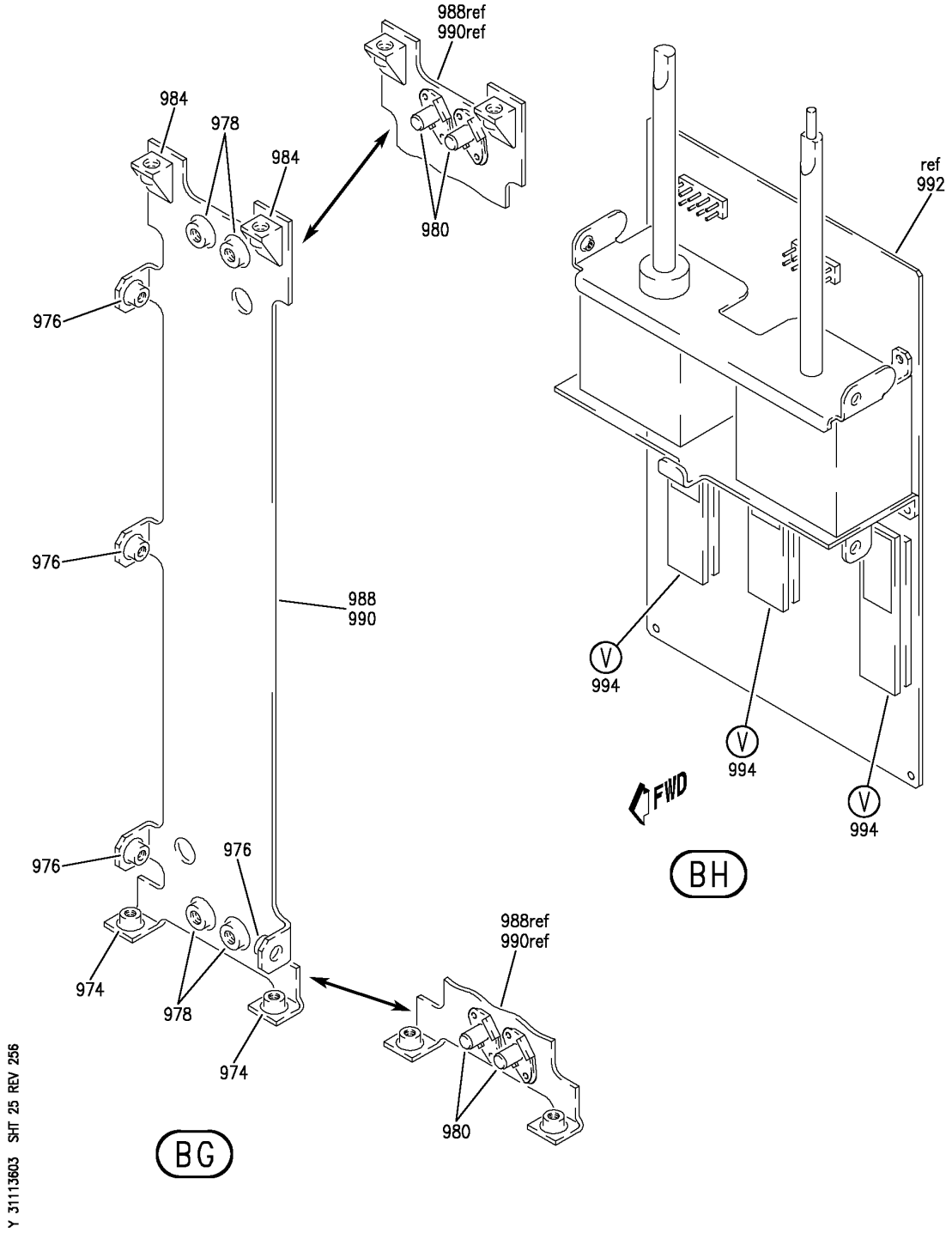

PANEL INSTL-P8 ELECTRONICS (CONTROL STAND AFT ELECTRONIC PANEL ONLY)
FIGURE 3 (SHEET 25)

BOEING PROPRIETARY - Copyright © - Unpublished Work - See title page for details.

	FIG ITEM	PART NUMBER	1 2 3 4 5 6 7 NOMENCLATURE	EFFECT FROM TO	UNITS PER ASSY
	3				
			PANEL INSTL-P8 ELECTRONICS (CONTROL STAND AFT ELECTRONIC PANEL ONLY)	107107	
	- 1	233N6101-1	PANEL INSTL-P8 ELECTRONICS (CONTROL STAND AFT ELECTRONIC PANEL ONLY) VARIABLE DRAWING REF: 233N6101-5004 FOR NHA/OTHER SYS DET SEE: 25-10-00-05A	107107	RF
R	5	2041223-0402	.PANEL-WEATHER RDR CONT SUPPLIER CODE: V97896 SPECIFICATION NUMBER: S220T109-401 ELECTRICAL EQUIP NUMBER: M00075 COMPONENT MAINT MANUAL REF: 34-41-12 PRE SERVICE BULLETIN: 34-0394 FOR BREAKDOWN SEE: 34-43-02-01	107107	RF
	7	2041223-0418	.PANEL-WEATHER RDR CONT SUPPLIER CODE: V97896 ELECTRICAL EQUIP NUMBER: M00075 COMPONENT MAINT MANUAL REF: 34-41-12 POST SERVICE BULLETIN: 34-0394 FOR BREAKDOWN SEE: 34-43-02-01	107107	RF
R	12	G6317	.PANEL-VHF CONT SUPPLIER CODE: V99837 ELECTRICAL EQUIP NUMBER: M00078 M00079 COMPONENT MAINT MANUAL REF: 23-11-07 QUALIFIED I/W DATA: 622-6831-001 IS INTERCHANGEABLE WITH G6317 AS A SET ONLY. FOR OTHER SYS DETAILS SEE: 23-12-02-01	107107	RF

MISSING ITEM NUMBERS NOT APPLICABLE

- ITEM NOT ILLUSTRATED

BOEING PROPRIETARY - Copyright © - Unpublished Work - See title page for details.

FIG ITEM	PART NUMBER	1 2 3 4 5 6 7 NOMENCLATURE	EFFECT FROM TO	UNITS PER ASSY
3				
15	285T0022-44	.PANEL ASSY-AUDIO SELECTOR SUPPLIER CODE: V89954 ELECTRICAL EQUIP NUMBER: M00070 M00071 COMPONENT MAINT MANUAL REF: 23-51-54 FOR OTHER SYS DETAILS SEE: 23-51-01-01 33-13-58-01	107107	2
15	285T0022-38	.PANEL ASSY-AUDIO SELECTOR SUPPLIER CODE: V89954 ELECTRICAL EQUIP NUMBER: M00070 M00071 COMPONENT MAINT MANUAL REF: 23-51-54 FOR OTHER SYS DETAILS SEE: 23-51-01-01 33-13-58-01	107107	2
15	285T0022-28	.PANEL ASSY-AUDIO SELECTOR SUPPLIER CODE: V89954 ELECTRICAL EQUIP NUMBER: M00070 M00071 COMPONENT MAINT MANUAL REF: 23-51-51 FOR OTHER SYS DETAILS SEE: 23-51-01-01 33-13-58-01	107107	2
15	285T0022-22	.PANEL ASSY-AUDIO SELECTOR SUPPLIER CODE: V89954 ELECTRICAL EQUIP NUMBER: M00070 M00071 COMPONENT MAINT MANUAL REF: 23-51-51 FOR OTHER SYS DETAILS SEE: 23-51-01-01 33-13-58-01	107107	2

MISSING ITEM NUMBERS NOT APPLICABLE

– ITEM NOT ILLUSTRATED

BOEING PROPRIETARY - Copyright © - Unpublished Work - See title page for details.

FIG ITEM	PART NUMBER	1 2 3 4 5 6 7 NOMENCLATURE	EFFECT FROM TO	UNITS PER ASSY
3				
16	BAC27TEX4053	..MARKER-ALUMINUM FOIL SUPPLIER CODE: V89954 QUALIFIED OPTIONAL DATA: BAC27TEX4053 OPTIONAL BAC27TEX1992 WHEN USED ASSOCIATED PARTS USED ON: 285T0022-44 285T0022-43 285T0022-38 285T0022-37	107107	1
17	BAC27TEX1992	..MARKER-ALUMINUM FOIL QUALIFIED OPTIONAL DATA: BAC27TEX4053 OPTIONAL BAC27TEX1992 WHEN USED ASSOCIATED PARTS USED ON: 285T0022-44 285T0022-43 285T0022-38 285T0022-37	107107	1
17	BAC27TEX1992	..MARKER-ALUMINUM FOIL USED ON: 285T0022-28 285T0022-27 285T0022-22	107107	1
18	NAS514P632-5	..SCREW	107107	4
20	NAS514P440-5	..SCREW	107107	12
22	NAS514P440-4	..SCREW	107107	4
24	BACG20ZA350	..GROMMET- USED ON: 285T0022-22 285T0022-27 285T0022-28 285T0022-37 285T0022-38	107107	2
24	BACG20ZA350	..GROMMET- OPTIONAL PART: BACG20ZA000350 USED ON: 285T0022-44 285T0022-43	107107	2
24	BACG20ZA000350	..GROMMET- OPTIONAL PART: BACG20ZA350 USED ON: 285T0022-44 285T0022-43	107107	2

MISSING ITEM NUMBERS NOT APPLICABLE

– ITEM NOT ILLUSTRATED

BOEING PROPRIETARY - Copyright © - Unpublished Work - See title page for details.

FIG ITEM	PART NUMBER	1 2 3 4 5 6 7 NOMENCLATURE	EFFECT FROM TO	UNITS PER ASSY
3				
26	285T0179-43	..PANEL ASSY-FRONT SUPPLIER CODE: V89954	107107	1
27	D1400-6A1	...STUD ASSY SUPPLIER CODE: V08524 SPECIFICATION NUMBER: BACS21DD1	107107	4
28	SF6G6CBB5D	...NUT SUPPLIER CODE: V12324 SPECIFICATION NUMBER: BACN10PA06-6	107107	3
29	F19716-06	...NUT-ANCHOR SUPPLIER CODE: V15653 ATTACHING PARTS	107107	4
- 30	BACR15BA2AD	...RIVET- SIZE DETERMINED ON INSTL. -------*-------	107107	8
31	285T0179-45	...SPACER- SUPPLIER CODE: V89954	107107	4
32	285T0179-44	...PANEL- SUPPLIER CODE: V89954	107107	1
34	285T0179-47	..PANEL- SUPPLIER CODE: V89954	107107	2
36	285T0179-48	..CHASSIS ASSY- SUPPLIER CODE: V89954	107107	1
37	F22A27M22-40	...NUT-ANCHOR SUPPLIER CODE: V0217B OPTIONAL PART: A27M88-04 V62554	107107	12
37	A27M88-04	...NUT-ANCHOR SUPPLIER CODE: V62554 OPTIONAL PART: F22A27M22-40 V0217B ATTACHING PARTS	107107	12
- 38	BACR15BA2AD	...RIVET- SIZE DETERMINED ON INSTL. -------*-------	107107	24

MISSING ITEM NUMBERS NOT APPLICABLE

- ITEM NOT ILLUSTRATED

BOEING PROPRIETARY - Copyright © - Unpublished Work - See title page for details.

FIG ITEM	PART NUMBER	1 2 3 4 5 6 7 NOMENCLATURE	EFFECT FROM TO	UNITS PER ASSY
3				
42	285T0179-24	...CHASSIS- SUPPLIER CODE: V89954	107107	1
50	285T0537-1	.PANEL ASSY-ADF CONT SUPPLIER CODE: V89954 ELECTRICAL EQUIP NUMBER: M01046 COMPONENT MAINT MANUAL REF: 34-57-53 FOR OTHER SYS DETAILS SEE: 11-31-05-04 33-13-58-01 34-57-02-02	107107	1
52	BAC27TEX3153	..MARKER- SUPPLIER CODE: V89954	107107	1
54	NAS1801-04-6	..SCREW	107107	3
56	MS35206-202	..SCREW	107107	4
57	AN960-4L	..WASHER	107107	3
58	WCS225-5	..SEAL ASSY- SUPPLIER CODE: V51074	107107	2
60	S233-7	..SEAL- SUPPLIER CODE: V51896 OPTIONAL PART: S233-14 V51896	107107	1
60	S233-14	..SEAL- SUPPLIER CODE: V51896 OPTIONAL PART: S233-7 V51896	107107	1
62	285T0450-4	..ENCLOSURE ASSY- SUPPLIER CODE: V89954 OPTIONAL PART: 285T0450-2 V89954	107107	1
62	285T0450-2	..ENCLOSURE ASSY- SUPPLIER CODE: V89954 OPTIONAL PART: 285T0450-4 V89954	107107	1
64	NAS1801-04-5	...SCREW	107107	4
66	NAS514P440-5P	...SCREW	107107	22

MISSING ITEM NUMBERS NOT APPLICABLE

— ITEM NOT ILLUSTRATED

BOEING PROPRIETARY - Copyright © - Unpublished Work - See title page for details.

FIG ITEM	PART NUMBER	1 2 3 4 5 6 7 NOMENCLATURE	EFFECT FROM TO	UNITS PER ASSY
3				
68	NAS514P440-7P	...SCREW	107107	1
70	285T0449-1	...COVER-UPR	107107	1
		SUPPLIER CODE:		
		V89954		
72	285T0449-9	...COVER ASSY-LWR	107107	1
		SUPPLIER CODE:		
		V89954		
74	285T0448-9	...PANEL ASSY-FRONT	107107	1
		SUPPLIER CODE:		
		V89954		
		USED ON:		
		285T0450-4		
74	285T0448-4	...PANEL ASSY-FRONT	107107	1
		SUPPLIER CODE:		
		V89954		
		USED ON:		
		285T0450-2		
76	BACS21DD1B	....STUD ASSY	107107	4
		SUPPLIER CODE:		
		V08524		
		SPECIFICATION NUMBER:		
		BACS21DD1B		
78	SF6G6CBB5D	....NUT	107107	5
		SUPPLIER CODE:		
		V12324		
		SPECIFICATION NUMBER:		
		BACN10PA06-6		
80	285T0451-1	....CLIP-	107107	1
		SUPPLIER CODE:		
		V89954		
		ATTACHING PARTS		
- 82	BACR15BA2AD	....RIVET-	107107	2
		SIZE DETERMINED ON INSTL.		
		-------*-------		

MISSING ITEM NUMBERS NOT APPLICABLE

- ITEM NOT ILLUSTRATED

BOEING PROPRIETARY - Copyright © - Unpublished Work - See title page for details.

FIG ITEM	PART NUMBER	1 2 3 4 5 6 7 NOMENCLATURE	EFFECT FROM TO	UNITS PER ASSY
3				
84	RMF9201M40	....NUTPLATE SUPPLIER CODE: V72962 SPECIFICATION NUMBER: BACN10JN04 OPTIONAL PART: BRFM20A04L V52828 MF1000-04BAC V15653 NS103218-40 V80539 MF53049-04 V15653 T8124S04S V11815 VN252A40L V92215 ATTACHING PARTS	107107	1
- 86	BACR15BA3AD	....RIVET- SIZE DETERMINED ON INSTL. -------*-------	107107	2
88	285T0448-10	....PANEL- SUPPLIER CODE: V89954 USED ON: 285T0448-9	107107	1
88	285T0448-5	....PANEL- SUPPLIER CODE: V89954 USED ON: 285T0448-4	107107	1
90	285T0449-4	...PANEL ASSY-SIDE SUPPLIER CODE: V89954	107107	1

MISSING ITEM NUMBERS NOT APPLICABLE

- ITEM NOT ILLUSTRATED

BOEING PROPRIETARY - Copyright © - Unpublished Work - See title page for details.

FIG ITEM	PART NUMBER	1 2 3 4 5 6 7 NOMENCLATURE	EFFECT FROM TO	UNITS PER ASSY
3				
92	RMF9201M40	....NUTPLATE SUPPLIER CODE: V72962 SPECIFICATION NUMBER: BACN10JN04 OPTIONAL PART: BRFM20A04L V52828 MF1000-04BAC V15653 NS103218-40 V80539 MF53049-04 V15653 T8124S04S V11815 VN252A40L V92215 ATTACHING PARTS	107107	6
- 94	BACR15BA3AD	....RIVET- SIZE DETERMINED ON INSTL. -------*-------	107107	12
96	F22A27M22-40	....NUT-ANCHOR SUPPLIER CODE: V0217B ATTACHING PARTS	107107	3
- 98	BACR15BA2AD	....RIVET- SIZE DETERMINED ON INSTL. -------*-------	107107	6
100	285T0447-5	....CLIP- SUPPLIER CODE: V89954	107107	1
102	285T0449-8	....PANEL- SUPPLIER CODE: V89954	107107	1
104	285T0449-11	...PANEL ASSY-SIDE SUPPLIER CODE: V89954	107107	1

MISSING ITEM NUMBERS NOT APPLICABLE

- ITEM NOT ILLUSTRATED

BOEING PROPRIETARY - Copyright © - Unpublished Work - See title page for details.

FIG ITEM	PART NUMBER	1 2 3 4 5 6 7 NOMENCLATURE	EFFECT FROM TO	UNITS PER ASSY
3				
106	RMF9201M40	....NUTPLATE SUPPLIER CODE: V72962 SPECIFICATION NUMBER: BACN10JN04 OPTIONAL PART: BRFM20A04L V52828 MF1000-04BAC V15653 NS103218-40 V80539 MF53049-04 V15653 T8124S04S V11815 VN252A40L V92215 ATTACHING PARTS	107107	5
- 108	BACR15BA3AD	....RIVET- SIZE DETERMINED ON INSTL. -------*-------	107107	10
110	F22A27M22-40	....NUT-ANCHOR SUPPLIER CODE: V0217B ATTACHING PARTS	107107	3
- 112	BACR15BA2AD	....RIVET- SIZE DETERMINED ON INSTL. -------*-------	107107	6
114	285T0447-5	....CLIP- SUPPLIER CODE: V89954	107107	1
116	285T0449-12	....PANEL- SUPPLIER CODE: V89954	107107	1
118	285T0447-1	...PANEL ASSY-REAR SUPPLIER CODE: V89954	107107	1
120	F22A27M22-40	....NUT-ANCHOR SUPPLIER CODE: V0217B ATTACHING PARTS	107107	3
- 122	BACR15BB2AD	....RIVET- SIZE DETERMINED ON INSTL. -------*-------	107107	6
124	285T0447-4	....CLIP- SUPPLIER CODE: V89954	107107	1

MISSING ITEM NUMBERS NOT APPLICABLE

- ITEM NOT ILLUSTRATED

BOEING PROPRIETARY - Copyright © - Unpublished Work - See title page for details.

FIG ITEM	PART NUMBER	1 2 3 4 5 6 7 NOMENCLATURE	EFFECT FROM TO	UNITS PER ASSY
3				
126	285T0447-3	....SPACER- SUPPLIER CODE: V89954	107107	1
128	285T0447-2	....PANEL- SUPPLIER CODE: V89954	107107	1
130	285T0446-1	...SUPPORT ASSY-PWR SUPPLY SUPPLIER CODE: V89954	107107	1
132	TC140	....PLATE-MTG SUPPLIER CODE: V59730 SPECIFICATION NUMBER: STBP19M1 ATTACHING PARTS	107107	1
- 134	NAS600-6P	....SCREW -------*-------	107107	1
136	TC140	....PLATE-MTG SUPPLIER CODE: V59730 SPECIFICATION NUMBER: STBP19M1 ATTACHING PARTS	107107	2
- 138	MS20470A4-6	....RIVET -------*-------	107107	2
140	F22A27M22-40	....NUT-ANCHOR SUPPLIER CODE: V0217B ATTACHING PARTS	107107	1
- 142	BACR15BB2AD	....RIVET- SIZE DETERMINED ON INSTL. -------*-------	107107	2

MISSING ITEM NUMBERS NOT APPLICABLE

- ITEM NOT ILLUSTRATED

BOEING PROPRIETARY - Copyright © - Unpublished Work - See title page for details.

FIG ITEM	PART NUMBER	1 2 3 4 5 6 7 NOMENCLATURE	EFFECT FROM TO	UNITS PER ASSY
3				
143	RMF9201M40	....NUTPLATE SUPPLIER CODE: V72962 SPECIFICATION NUMBER: BACN10JN04 OPTIONAL PART: BRFM20A04L V52828 MF1000-04BAC V15653 NS103218-40 V80539 MF53049-04 V15653 T8124S04S V11815 VN252A40L V92215 ATTACHING PARTS	107107	8
- 144	BACR15BA3AD	....RIVET- SIZE DETERMINED ON INSTL. -------*-------	107107	16
145	285T0446-2	....BRACKET-SPRT SUPPLIER CODE: V89954	107107	1
146	285T0445-5	..MODULE ASSY-ELECT. SUPPLIER CODE: V89954	107107	1
- 147	285T0445-6	...MODULE ASSY- SUPPLIER CODE: V89954	107107	RF
148	285T0253-5	....PMD ASSY- SUPPLIER CODE: V89954	107107	2
149	BAC27TEX2007	.....DECAL- OPTIONAL PART: WHB673-10X05 V85480	107107	1
149	WHB673-10X05	.....DECAL- SUPPLIER CODE: V85480 OPTIONAL PART: BAC27TEX2007	107107	1

MISSING ITEM NUMBERS NOT APPLICABLE

- ITEM NOT ILLUSTRATED

BOEING PROPRIETARY - Copyright © - Unpublished Work - See title page for details.

FIG ITEM	PART NUMBER	1 2 3 4 5 6 7 NOMENCLATURE	EFFECT FROM TO	UNITS PER ASSY
3				
150	285T0557-1	.PANEL ASSY-DUAL ADF CONT SUPPLIER CODE: V89954 ELECTRICAL EQUIP NUMBER: M01046 COMPONENT MAINT MANUAL REF: 34-57-62 FOR OTHER SYS DETAILS SEE: 11-31-05-04 33-13-58-01 34-57-02-02	107107	1
153	BAC27TEX3471	..MARKER- SUPPLIER CODE: V89954 QUALIFIED OPTIONAL DATA: BAC27TEX3471 IS OPT TO BAC27TEX4182 WHEN USED WITH ASSOCIATED PARTS	107107	1
156	BAC27TEX4182	..MARKER- SUPPLIER CODE: V89954 QUALIFIED OPTIONAL DATA: BAC27TEX3471 IS OPT TO BAC27TEX4182 WHEN USED WITH ASSOCIATED PARTS	107107	1
159	NAS1801-04-5	..SCREW	107107	12
162	NAS514P440-4P	..SCREW	107107	4
168	NAS514P440-5P	..SCREW	107107	10
171	MS35206-202	..SCREW	107107	4
173	MS35338-40	..WASHER	107107	8
177	AN960-4L	..WASHER	107107	8
189	WCS225-5	..SEAL ASSY-SHAFT SUPPLIER CODE: V51074 QUALIFIED OPTIONAL DATA: WCS225-5 OPT TO WCS225-9 WHEN USED WITH ASSOCIATED ITEMS	107107	2
189	WCS225-9	..SEAL ASSY-SHAFT SUPPLIER CODE: V51074 QUALIFIED OPTIONAL DATA: WCS225-5 OPT TO WCS225-9 WHEN USED WITH ASSOCIATED ITEMS	107107	2

MISSING ITEM NUMBERS NOT APPLICABLE

– ITEM NOT ILLUSTRATED

BOEING PROPRIETARY - Copyright © - Unpublished Work - See title page for details.

FIG ITEM	PART NUMBER	1 2 3 4 5 6 7 NOMENCLATURE	EFFECT FROM TO	UNITS PER ASSY
3				
193	285T0580-1	..GASKET-LCD MODULE SUPPLIER CODE: V89954 OPTIONAL PART: 285T0580-2 V89954	107107	2
194	285T0580-2	..GASKET ASSY-LCD MODULE SUPPLIER CODE: V89954 OPTIONAL PART: 285T0580-1 V89954	107107	2
199	285T1151-2	..GASKET- SUPPLIER CODE: V89954 QUALIFIED OPTIONAL DATA: 285T1151-1 OPT TO 285T1151-2 WHEN USED WITH ASSOCIATED ITEMS	107107	2
199	285T1151-1	..GASKET- SUPPLIER CODE: V89954 QUALIFIED OPTIONAL DATA: 285T1151-1 OPT TO 285T1151-2 WHEN USED WITH ASSOCIATED ITEMS	107107	2
203	285T0549-2	..COVER ASSY- SUPPLIER CODE: V89954	107107	2
206	285T0548-6	..PANEL ASSY-FRONT SUPPLIER CODE: V89954	107107	1
207	U256-1	...NUT-PRESS SUPPLIER CODE: V46384	107107	8
209	BACS21DD1B	...STUD ASSY SUPPLIER CODE: V08524 SPECIFICATION NUMBER: BACS21DD1B	107107	4
212	SF6G6CBB5D	...NUT SUPPLIER CODE: V12324 SPECIFICATION NUMBER: BACN10PA06-6	107107	2
213	285T0548-16	...PANEL- SUPPLIER CODE: V89954	107107	1

MISSING ITEM NUMBERS NOT APPLICABLE

– ITEM NOT ILLUSTRATED

BOEING PROPRIETARY - Copyright © - Unpublished Work - See title page for details.

FIG ITEM	PART NUMBER	1 2 3 4 5 6 7 NOMENCLATURE	EFFECT FROM TO	UNITS PER ASSY
3				
218	285T0550-15	..PANEL ASSY-SIDE SUPPLIER CODE: V89954 OPTIONAL PART: 285T0550-3 V89954 285T0550-11 V89954	107107	1
218	285T0550-11	..PANEL ASSY-SIDE SUPPLIER CODE: V89954 OPTIONAL PART: 285T0550-3 V89954 285T0550-15 V89954	107107	1
218	285T0550-3	..PANEL ASSY-SIDE SUPPLIER CODE: V89954 OPTIONAL PART: 285T0550-11 V89954 285T0550-15 V89954	107107	1
221	285T0550-16	..PANEL ASSY-SIDE SUPPLIER CODE: V89954 OPTIONAL PART: 285T0550-4 V89954 285T0550-12 V89954	107107	1
221	285T0550-12	..PANEL ASSY-SIDE SUPPLIER CODE: V89954 OPTIONAL PART: 285T0550-4 V89954 285T0550-16 V89954	107107	1
221	285T0550-4	..PANEL ASSY-SIDE SUPPLIER CODE: V89954 OPTIONAL PART: 285T0550-12 V89954 285T0550-16 V89954	107107	1

MISSING ITEM NUMBERS NOT APPLICABLE

– ITEM NOT ILLUSTRATED

BOEING PROPRIETARY - Copyright © - Unpublished Work - See title page for details.

FIG ITEM	PART NUMBER	1 2 3 4 5 6 7 NOMENCLATURE	EFFECT FROM TO	UNITS PER ASSY
3				
222	FE0440EF	...NUT-PRESS SUPPLIER CODE: V46384	107107	2
223	FE0440EF	...NUT-PRESS SUPPLIER CODE: V46384 USED ON: 285T0550-11 285T0550-12 285T0550-15 285T0550-16	107107	4
223	FE0X440	...NUT-PRESS SUPPLIER CODE: V46384 USED ON: 285T0550-3 285T0550-4	107107	4
225	LAC440-1	...NUT-PRESS SUPPLIER CODE: V46384 USED ON: 285T0550-3 285T0550-4 285T0550-11 285T0550-12	107107	4
227	BACN10XR04	...NUTPLATE- USED ON: 285T0550-15 285T0550-16 ATTACHING PARTS	107107	4
- 229	BACR15BA2AD	...RIVET- SIZE DETERMINED ON INSTL. USED ON: 285T0550-15 285T0550-16 -------*-------	107107	8
231	F22A27M22-40	...NUT-ANCHOR SUPPLIER CODE: V0217B ATTACHING PARTS	107107	2
- 233	BACR15BA2AD	...RIVET- SIZE DETERMINED ON INSTL. -------*-------	107107	4
235	285T0550-19	...PANEL- SUPPLIER CODE: V89954 USED ON: 285T0550-15	107107	1

MISSING ITEM NUMBERS NOT APPLICABLE

- ITEM NOT ILLUSTRATED

BOEING PROPRIETARY - Copyright © - Unpublished Work - See title page for details.

FIG ITEM	PART NUMBER	1 2 3 4 5 6 7 NOMENCLATURE	EFFECT FROM TO	UNITS PER ASSY
3				
235	285T0550-7	...PANEL- SUPPLIER CODE: V89954 USED ON: 285T0550-3 285T0550-11	107107	1
238	285T0550-20	...PANEL- SUPPLIER CODE: V89954 USED ON: 285T0550-16	107107	1
238	285T0550-8	...PANEL- SUPPLIER CODE: V89954 USED ON: 285T0550-4 285T0550-12	107107	1
241	285T0561-1	..MODULE ASSY-ELECT. SUPPLIER CODE: V89954	107107	1
242	285T0569-1	...DEVICE ASSY-PROGRAMMED MEMORY SUPPLIER CODE: V89954	107107	2
243	BAC27TEX2007	....DECAL- OPTIONAL PART: WHB673-1D0X0D5 V85480	107107	1
243	WHB673-1D0X0D5	....DECAL- SUPPLIER CODE: V85480 OPTIONAL PART: BAC27TEX2007	107107	1
244	285T0546-3	..PANEL-REAR SUPPLIER CODE: V89954	107107	1
245	BACP10U0262T	.PANEL	107107	1

MISSING ITEM NUMBERS NOT APPLICABLE

– ITEM NOT ILLUSTRATED

BOEING PROPRIETARY - Copyright © - Unpublished Work - See title page for details.

FIG ITEM	PART NUMBER	1 2 3 4 5 6 7 NOMENCLATURE	EFFECT FROM TO	UNITS PER ASSY
3				
250	233N6204-14	.PANEL ASSY-FIRE/OVERHEAT TEST SUPPLIER CODE: V89954 ELECTRICAL EQUIP NUMBER: M10445 COMPONENT MAINT MANUAL REF: 26-11-52 QUALIFIED I/W DATA: 233N6204-13 -14 -15 -16 -17 ARE ALL INTERCHANGEABLE EXCEPT SUBJECT TO CUSTOMER PREFERENCE FOR OTHER SYS DETAILS SEE: 26-11-02-02 26-12-51-01 26-17-51-03 33-13-58-01	107107	1
255	233N6204-11	..BASEPLATE ASSY- SUPPLIER CODE: V89954 ATTACHING PARTS	107107	1
- 260	NAS514P632-5	..SCREW -------*-------	107107	3
265	PFSC35-38ASEMB	...STUD ASSY- SUPPLIER CODE: V72794 SPECIFICATION NUMBER: BACS21DX1B	107107	4
270	SF6G6CBB5D	...NUT SUPPLIER CODE: V12324 SPECIFICATION NUMBER: BACN10PA06-6	107107	2
275	233N6204-12	...BASEPLATE- SUPPLIER CODE: V89954	107107	1
280	NAS1801-06-5	..SCREW-	107107	3
285	MS35338-41	..WASHER-	107107	3
290	69B46200-14	..STANDOFF	107107	3
295	233N3250-40	..BRACKET	107107	1
420	BACP10U0450T	.PANEL ASSY	107107	1

MISSING ITEM NUMBERS NOT APPLICABLE

- ITEM NOT ILLUSTRATED

BOEING PROPRIETARY - Copyright © - Unpublished Work - See title page for details.

FIG ITEM	PART NUMBER	1 2 3 4 5 6 7 NOMENCLATURE	EFFECT FROM TO	UNITS PER ASSY
3				
430	285T0026-10	.PANEL ASSY-AIR TRAFFIC CONT SUPPLIER CODE: V89954 ELECTRICAL EQUIP NUMBER: M10140 COMPONENT MAINT MANUAL REF: 34-53-51 FOR OTHER SYS DETAILS SEE: 33-13-58-01 34-53-02-01	107107	1
432	BAC27TEX1109	..MARKER-ALUMINUM FOIL	107107	1
434	NAS1801-04-4	..SCREW	107107	2
436	NAS514P440-4P	..SCREW	107107	9
438	S233-10	..SEAL- SUPPLIER CODE: V51896 OPTIONAL PART: S233-3 V51896	107107	1
438	S233-3	..SEAL- SUPPLIER CODE: V51896 OPTIONAL PART: S233-10 V51896	107107	1
442	285T0229-13	..MODULE ASSY-FRONT SUPPLIER CODE: V89954 OPTIONAL PART: 285T0229-18 V89954	107107	1
442	285T0229-18	..MODULE ASSY-FRONT SUPPLIER CODE: V89954 OPTIONAL PART: 285T0229-13 V89954	107107	1
445	MS35206-202	...SCREW	107107	4
446	WCS225-7	...SEAL ASSY-SHAFT SUPPLIER CODE: V51074	107107	2
448	WCS233-1	...SEAL- SUPPLIER CODE: V51074	107107	1

MISSING ITEM NUMBERS NOT APPLICABLE

– ITEM NOT ILLUSTRATED

BOEING PROPRIETARY - Copyright © - Unpublished Work - See title page for details.

FIG ITEM	PART NUMBER	1 2 3 4 5 6 7 NOMENCLATURE	EFFECT FROM TO	UNITS PER ASSY
3				
450	285T0440-24	...PANEL ASSY- SUPPLIER CODE: V89954 USED ON: 285T0229-18	107107	1
450	285T0440-13	...PANEL ASSY- SUPPLIER CODE: V89954 USED ON: 285T0229-13	107107	1
452	BACS21DD1B	....STUD ASSY SUPPLIER CODE: V08524 SPECIFICATION NUMBER: BACS21DD1B	107107	4
453	SF6G6CBB5D	....NUT SUPPLIER CODE: V12324 SPECIFICATION NUMBER: BACN10PA06-6	107107	4
454	285T0439-11	..PANEL ASSY-SIDE SUPPLIER CODE: V89954	107107	1
456	F22A27M22-40	...NUT-ANCHOR SUPPLIER CODE: V0217B ATTACHING PARTS	107107	2
- 458	BACR15BA2AD	...RIVET- SIZE DETERMINED ON INSTL. -------*-------	107107	4
459	285T0439-15	...PANEL-SIDE SUPPLIER CODE: V89954	107107	1
460	285T0439-12	..PANEL ASSY-SIDE SUPPLIER CODE: V89954	107107	1
462	F22A27M22-40	...NUT-ANCHOR SUPPLIER CODE: V0217B ATTACHING PARTS	107107	2
- 464	BACR15BA2AD	...RIVET- SIZE DETERMINED ON INSTL. -------*-------	107107	4
465	285T0439-16	...PANEL-SIDE SUPPLIER CODE: V89954	107107	1
466	285T0228-3	..REAR MOD ASSY- SUPPLIER CODE: V89954	107107	1

MISSING ITEM NUMBERS NOT APPLICABLE

- ITEM NOT ILLUSTRATED

BOEING PROPRIETARY - Copyright © - Unpublished Work - See title page for details.

FIG ITEM	PART NUMBER	1 2 3 4 5 6 7 NOMENCLATURE	EFFECT FROM TO	UNITS PER ASSY
3				
468	285T0251-3	...PMD ASSY-	107107	2
		SUPPLIER CODE:		
		V89954		
472	BAC27TEX2007	....DECAL	107107	1
474	NAS514P440-5P	...SCREW	107107	9
476	NAS43DD0-8	...SPACER	107107	9
478	NAS620-4L	...WASHER	107107	9
480	92-1660-40	...NUT	107107	9
		SUPPLIER CODE:		
		V72962		
		SPECIFICATION NUMBER:		
		BACN10DN40		
		OPTIONAL PART:		
		92-1660-440		
		V15653		
482	285T0083-77	...CHASSIS ASSY-	107107	1
		SUPPLIER CODE:		
		V89954		
484	RMF9201M40	....NUTPLATE	107107	3
		SUPPLIER CODE:		
		V72962		
		SPECIFICATION NUMBER:		
		BACN10JN04		
		OPTIONAL PART:		
		BRFM20A04L		
		V52828		
		MF1000-04BAC		
		V15653		
		NS103218-40		
		V80539		
		MF53049-04		
		V15653		
		T8124S04S		
		V11815		
		VN252A40L		
		V92215		
		ATTACHING PARTS		
- 486	BACR15BA3AD	....RIVET-	107107	6
		SIZE DETERMINED ON INSTL.		
		-------*-------		
488	285T0083-37	....CHASSIS-	107107	1
		SUPPLIER CODE:		
		V89954		

MISSING ITEM NUMBERS NOT APPLICABLE

- ITEM NOT ILLUSTRATED

BOEING PROPRIETARY - Copyright © - Unpublished Work - See title page for details.

FIG ITEM	PART NUMBER	1 2 3 4 5 6 7 NOMENCLATURE	EFFECT FROM TO	UNITS PER ASSY
3				
535	285T0020-8	.PANEL ASSY-ILS CONT CONT SUPPLIER CODE: V89954 ELECTRICAL EQUIP NUMBER: M00087 COMPONENT MAINT MANUAL REF: 34-31-51 FOR OTHER SYS DETAILS SEE: 11-31-05-04 33-13-58-01 34-31-02-01	107107	1
536	BAC27TEX0934	..MARKER-ALUMINUM FOIL SUPPLIER CODE: V89954	107107	1
537	NAS514P440-4P	..SCREW	107107	10
538	NAS514P440-5P	..SCREW	107107	6
540	S233-2	..SEAL- SUPPLIER CODE: V51896 OPTIONAL PART: S233-9 V51896	107107	1
540	S233-9	..SEAL- SUPPLIER CODE: V51896 OPTIONAL PART: S233-2 V51896	107107	1
542	285T0082-10	..MODULE ASSY-FRONT SUPPLIER CODE: V89954 OPTIONAL PART: 285T0082-14 V89954	107107	1
542	285T0082-14	..MODULE ASSY-FRONT SUPPLIER CODE: V89954 OPTIONAL PART: 285T0082-10 V89954	107107	1
544	MS35206-202	...SCREW	107107	4
546	WCS225-3	...SEAL ASSY- SUPPLIER CODE: V51074 OPTIONAL PART: WCS225-7 V51074	107107	2

MISSING ITEM NUMBERS NOT APPLICABLE

– ITEM NOT ILLUSTRATED

BOEING PROPRIETARY - Copyright © - Unpublished Work - See title page for details.

FIG ITEM	PART NUMBER	1 2 3 4 5 6 7 NOMENCLATURE	EFFECT FROM TO	UNITS PER ASSY
3				
546	WCS225-7	...SEAL ASSY-	107107	2
		SUPPLIER CODE:		
		V51074		
		OPTIONAL PART:		
		WCS225-3		
		V51074		
548	285T0440-1	...PANEL ASSY-	107107	1
		SUPPLIER CODE:		
		V89954		
		USED ON:		
		285T0082-10		
548	285T0440-22	...PANEL ASSY-	107107	1
		SUPPLIER CODE:		
		V89954		
		USED ON:		
		285T0082-14		
550	NAS514P440-5P	....SCREW	107107	2
551	BACS21DD1B	....STUD ASSY	107107	4
		SUPPLIER CODE:		
		V08524		
		SPECIFICATION NUMBER:		
		BACS21DD1B		
552	92-1660-40	....NUT	107107	2
		SUPPLIER CODE:		
		V72962		
		SPECIFICATION NUMBER:		
		BACN10DN40		
		OPTIONAL PART:		
		92-1660-440		
		V15653		
553	SF6G6CBB5D	....NUT	107107	4
		SUPPLIER CODE:		
		V12324		
		SPECIFICATION NUMBER:		
		BACN10PA06-6		
554	285T0440-5	....PANEL-	107107	1
		SUPPLIER CODE:		
		V89954		
		USED ON:		
		285T0440-1		
554	285T0440-23	....PANEL-	107107	1
		SUPPLIER CODE:		
		V89954		
		USED ON:		
		285T0440-22		
555	285T0438-1	....CHASSIS ASSY-UPR	107107	1
		SUPPLIER CODE:		
		V89954		

MISSING ITEM NUMBERS NOT APPLICABLE

– ITEM NOT ILLUSTRATED

BOEING PROPRIETARY - Copyright © - Unpublished Work - See title page for details.

FIG ITEM	PART NUMBER	1 2 3 4 5 6 7 NOMENCLATURE	EFFECT FROM TO	UNITS PER ASSY
3				
556	F22A27M22-40	.....NUT-ANCHOR SUPPLIER CODE: V0217B ATTACHING PARTS	107107	2
- 557	BACR15BA2AD	.....RIVET- SIZE DETERMINED ON INSTL. -------*-------	107107	4
558	285T0439-3	..PANEL-SIDE SUPPLIER CODE: V89954	107107	1
560	285T0439-4	..PANEL-SIDE SUPPLIER CODE: V89954	107107	1
562	285T0081-10	..MODULE ASSY-REAR SUPPLIER CODE: V89954	107107	1
563	285T0250-4	...PMD ASSY- SUPPLIER CODE: V89954	107107	3
564	BAC27TEX2007	....DECAL- OPTIONAL PART: WHB673-1D0X0D5 V85480	107107	1
564	WHB673-1D0X0D5	....DECAL- SUPPLIER CODE: V85480 OPTIONAL PART: BAC27TEX2007	107107	1
566	NAS514P440-4P	...SCREW	107107	1
567	NAS514P440-7P	...SCREW	107107	1
568	NAS43DD0-8	...SPACER	107107	1
569	8214B0440HL	...SPACER-THREADED SUPPLIER CODE: V06540	107107	1
570	NAS620-4L	...WASHER	107107	1
571	285T0439-1	...CHASSIS ASSY- SUPPLIER CODE: V89954	107107	1
572	NAS1801-04-5	....SCREW	107107	1
573	AN960D4L	....WASHER	107107	3
574	F22A27M22-40	....NUT-ANCHOR SUPPLIER CODE: V0217B ATTACHING PARTS	107107	4
- 575	BACR15BB2AD	....RIVET- SIZE DETERMINED ON INSTL. -------*-------	107107	8

MISSING ITEM NUMBERS NOT APPLICABLE

- ITEM NOT ILLUSTRATED

BOEING PROPRIETARY - Copyright © - Unpublished Work - See title page for details.

FIG ITEM	PART NUMBER	1 2 3 4 5 6 7 NOMENCLATURE	EFFECT FROM TO	UNITS PER ASSY
3				
576	285T0439-6	....BRACKET ASSY- SUPPLIER CODE: V89954	107107	1
577	285T0439-2	....SUPPORT ASSY- SUPPLIER CODE: V89954 ATTACHING PARTS	107107	1
- 578	BACR15BA3AD	....RIVET- SIZE DETERMINED ON INSTL. -------*-------	107107	5
579	RMF9201M40	.....NUTPLATE SUPPLIER CODE: V72962 SPECIFICATION NUMBER: BACN10JN04 OPTIONAL PART: BRFM20A04L V52828 MF1000-04BAC V15653 NS103218-40 V80539 MF53049-04 V15653 T8124S04S V11815 VN252A40L V92215	107107	3
580	T8077S440	.....NUTPLATE SUPPLIER CODE: V11815 SPECIFICATION NUMBER: BACN10JP04B OPTIONAL PART: MK2000-04BAC V15653 NS103198-40 V80539 RMA9207M40 V72962 VN201A1-40L V92215 BRM100A04L V52828 ATTACHING PARTS	107107	1
- 581	BACR15BA3AD	.....RIVET- SIZE DETERMINED ON INSTL. -------*-------	107107	8

MISSING ITEM NUMBERS NOT APPLICABLE

- ITEM NOT ILLUSTRATED

BOEING PROPRIETARY - Copyright © - Unpublished Work - See title page for details.

FIG ITEM	PART NUMBER	1 2 3 4 5 6 7 NOMENCLATURE	EFFECT FROM TO	UNITS PER ASSY
3				
582	285T0439-17	.....SUPPORT- SUPPLIER CODE: V89954	107107	1
583	285T0439-5	....CHASSIS- SUPPLIER CODE: V89954	107107	1
600	285T0524-6	.PANEL ASSY-ILS CONT SUPPLIER CODE: V89954 ELECTRICAL EQUIP NUMBER: M00087 COMPONENT MAINT MANUAL REF: 34-31-52 FOR OTHER SYS DETAILS SEE: 11-31-05-04 33-13-58-01 34-31-02-01	107107	1
602	BAC27TEX2825	..MARKER-ALUMINUM FOIL SUPPLIER CODE: V89954	107107	1
604	MS35206-202	..SCREW	107107	4
606	NAS514P440-6P	..SCREW	107107	4
608	NAS1801-04-5	..SCREW	107107	2
610	AN960-4L	..WASHER	107107	2
612	92-1660-40	..NUT SUPPLIER CODE: V72962 SPECIFICATION NUMBER: BACN10DN40 OPTIONAL PART: 92-1660-440 V15653	107107	2
614	S233-6	..SEAL- SUPPLIER CODE: V51896 OPTIONAL PART: S233-13 V51896	107107	1
614	S233-13	..SEAL- SUPPLIER CODE: V51896 OPTIONAL PART: S233-6 V51896	107107	1
615	WCS225-7	..SEAL ASSY-SHAFT SUPPLIER CODE: V51074	107107	2

MISSING ITEM NUMBERS NOT APPLICABLE

– ITEM NOT ILLUSTRATED

BOEING PROPRIETARY - Copyright © - Unpublished Work - See title page for details.

FIG ITEM	PART NUMBER	1 2 3 4 5 6 7 NOMENCLATURE	EFFECT FROM TO	UNITS PER ASSY
3				
618	285T0525-3	..MODULE ASSY-ELECT. SUPPLIER CODE: V89954	107107	1
- 619	285T0525-4	...MODULE ASSY- SUPPLIER CODE: V89954	107107	1
620	285T0250-4	....PMD ASSY- SUPPLIER CODE: V89954	107107	3
621	BAC27TEX2007	.....DECAL- OPTIONAL PART: WHB673-1D0X0D5 V85480	107107	1
621	WHB673-1D0X0D5	.....DECAL- SUPPLIER CODE: V85480 OPTIONAL PART: BAC27TEX2007	107107	1
623	285T0530-1	..ENCLOSURE ASSY- SUPPLIER CODE: V89954 OPTIONAL PART: 285T0530-2 V89954	107107	1
623	285T0530-2	..ENCLOSURE ASSY- SUPPLIER CODE: V89954 OPTIONAL PART: 285T0530-1 V89954	107107	1
624	NAS1801-04-5	...SCREW	107107	4
625	NAS514P440-4P	...SCREW	107107	4
626	NAS514P440-5P	...SCREW	107107	12
627	AN960D4	...WASHER	107107	4
628	285T0529-1	...COVER ASSY-SHELL SUPPLIER CODE: V89954	107107	2
629	285T0528-1	...PANEL ASSY-FRONT SUPPLIER CODE: V89954 USED ON: 285T0530-1	107107	1
629	285T0528-3	...PANEL ASSY-FRONT SUPPLIER CODE: V89954 USED ON: 285T0530-2	107107	1

MISSING ITEM NUMBERS NOT APPLICABLE

- ITEM NOT ILLUSTRATED

BOEING PROPRIETARY - Copyright © - Unpublished Work - See title page for details.

FIG ITEM	PART NUMBER	1 2 3 4 5 6 7 NOMENCLATURE	EFFECT FROM TO	UNITS PER ASSY
3				
630	BACS21DD1B	....STUD ASSY SUPPLIER CODE: V08524 SPECIFICATION NUMBER: BACS21DD1B	107107	4
631	SF6G6CBB5D	....NUT SUPPLIER CODE: V12324 SPECIFICATION NUMBER: BACN10PA06-6	107107	4
632	285T0528-2	....PANEL- SUPPLIER CODE: V89954 USED ON: 285T0528-1	107107	1
632	285T0528-4	....PANEL- SUPPLIER CODE: V89954 USED ON: 285T0528-3	107107	1
634	285T0529-3	...PANEL ASSY-SIDE SUPPLIER CODE: V89954	107107	1
636	285T0529-4	...PANEL ASSY-SIDE SUPPLIER CODE: V89954	107107	1
638	RMF9201M40	....NUTPLATE SUPPLIER CODE: V72962 SPECIFICATION NUMBER: BACN10JN04 OPTIONAL PART: BRFM20A04L V52828 MF1000-04BAC V15653 NS103218-40 V80539 MF53049-04 V15653 T8124S04S V11815 VN252A40L V92215 ATTACHING PARTS	107107	4
- 640	BACR15BA3AD	....RIVET- SIZE DETERMINED ON INSTL. -------*-------	107107	8

MISSING ITEM NUMBERS NOT APPLICABLE

- ITEM NOT ILLUSTRATED

BOEING PROPRIETARY - Copyright © - Unpublished Work - See title page for details.

FIG ITEM	PART NUMBER	1 2 3 4 5 6 7 NOMENCLATURE	EFFECT FROM TO	UNITS PER ASSY
3				
642	F22A27M22-40	....NUT-ANCHOR SUPPLIER CODE: V0217B ATTACHING PARTS	107107	4
- 644	BACR15BA2AD	....RIVET- SIZE DETERMINED ON INSTL. -------*-------	107107	8
646	285T0529-5	....PANEL- SUPPLIER CODE: V89954 USED ON: 285T0529-3	107107	1
648	285T0529-6	....PANEL- SUPPLIER CODE: V89954 USED ON: 285T0529-4	107107	1
650	285T0527-1	...PANEL-REAR SUPPLIER CODE: V89954	107107	1
660	233T6201-21	.PANEL ASSY-AIL. RUD TRIM CONT SUPPLIER CODE: V89954 ELECTRICAL EQUIP NUMBER: M00074 COMPONENT MAINT MANUAL REF: 27-21-63 QUALIFIED I/W DATA: 233T6201-19 I/W 233T6201-21 EXCEPT FOR ETOPS WHERE 233T6201-21 MUST BE INSTALLED. THE 233T6201-324 PANEL ASSY IS I/W THE 233T6201-21 PANEL ASSY T/W THE S233T100-528 LIGHTPLATE AND SA808-101 KNOB FOR OTHER SYS DETAILS SEE: 27-11-23-01 27-21-23-01 33-13-58-01	107107	1

MISSING ITEM NUMBERS NOT APPLICABLE

- ITEM NOT ILLUSTRATED

BOEING PROPRIETARY - Copyright © - Unpublished Work - See title page for details.

FIG ITEM	PART NUMBER	1 2 3 4 5 6 7 NOMENCLATURE	EFFECT FROM TO	UNITS PER ASSY
3				
660	233T6201-22	.PANEL ASSY-AIL. RUD TRIM CONT SUPPLIER CODE: V89954 ELECTRICAL EQUIP NUMBER: M00074 FOR OTHER SYS DETAILS SEE: 27-11-23-01 27-21-23-01 33-13-58-01	107107	1
665	233T6200-38	..BRACKET-SPRT 01 MUST BE INSTALLED. ATTACHING PARTS	107107	1
- 670	NAS1801-06-5	..SCREW	107107	3
- 675	MS35338-41	..WASHER -------*-------	107107	3
680	NAS514P632-5	..SCREW	107107	7
685	69B46200-7	..STANDOFF	107107	3
690	233T6201-20	..SHROUD ASSY- SUPPLIER CODE: V89954 USED ON: 233T6201-21 233T6201-19	107107	1
692	MF6001-06	...NUTPLATE SUPPLIER CODE: V15653 SPECIFICATION NUMBER: BACN10KJ06CM ATTACHING PARTS	107107	4
- 693	BACR15BA3AD	...RIVET- SIZE DETERMINED ON INSTL. USED ON: 233T6201-20 -------*-------	107107	8
695	233T6201-15	..BASEPLATE ASSY- SUPPLIER CODE: V89954	107107	1
700	BACS21DD1B	...STUD ASSY SUPPLIER CODE: V08524 SPECIFICATION NUMBER: BACS21DD1B	107107	4
705	SF6G6CBB5D	...NUT SUPPLIER CODE: V12324 SPECIFICATION NUMBER: BACN10PA06-6	107107	3

MISSING ITEM NUMBERS NOT APPLICABLE

- ITEM NOT ILLUSTRATED

BOEING PROPRIETARY - Copyright © - Unpublished Work - See title page for details.

FIG ITEM	PART NUMBER	1 2 3 4 5 6 7 NOMENCLATURE	EFFECT FROM TO	UNITS PER ASSY
3				
710	233T6201-16	...BASEPLATE- SUPPLIER CODE: V89954	107107	1
785	362-021-001	.INDICATOR ASSY-RUD TRIM SUPPLIER CODE: V26055 SPECIFICATION NUMBER: S231T282-1 ELECTRICAL EQUIP NUMBER: N00083 COMPONENT MAINT MANUAL REF: 27-20-01 FOR BREAKDOWN SEE: 27-28-02-01	107107	RF
785	362-021-002	.INDICATOR ASSY-RUD TRIM SUPPLIER CODE: V26055 FUNCTIONAL DESCRIPTION: DISPLAYS RUDDER TRIM POSITION AS NOSE LEFT AND RIGHT UNITS SPECIFICATION NUMBER: S231T282-2 ELECTRICAL EQUIP NUMBER: N00083 COMPONENT MAINT MANUAL REF: 27-20-01 FOR BREAKDOWN SEE: 27-28-02-01	107107	RF

MISSING ITEM NUMBERS NOT APPLICABLE

– ITEM NOT ILLUSTRATED

BOEING PROPRIETARY - Copyright © - Unpublished Work - See title page for details.

FIG ITEM	PART NUMBER	1 2 3 4 5 6 7 NOMENCLATURE	EFFECT FROM TO	UNITS PER ASSY
3				
790	233N6203-45	.PANEL ASSY-APU/CARGO FIRE CONT SUPPLIER CODE: V89954 ELECTRICAL EQUIP NUMBER: M10444 COMPONENT MAINT MANUAL REF: 26-15-51 QUALIFIED I/W DATA: 233N6203-9 -23 -45 -103 -104 -105 ARE ALL I/W EXCEPT SUBJECT TO CUSTOMER PREFERENCE 233N6203-9/-23/-45/-104/ -105/-161 ARE ALL INTERCHANGEABLE EXCEPT SUBJECT TO CUSTOMER PREFERENCE PRE ALERT SB: 33A0044 FOR OTHER SYS DETAILS SEE: 26-22-03-02 26-23-52-02 33-13-58-01	107107	1
790	233N6203-1045	.PANEL ASSY-APU/CARGO FIRE CONT SUPPLIER CODE: V89954 ELECTRICAL EQUIP NUMBER: M10444 COMPONENT MAINT MANUAL REF: 26-15-51 POST ALERT SB: 33A0044 FOR OTHER SYS DETAILS SEE: 26-22-03-02 26-23-52-02 33-13-58-01	107107	1
794	BACS12CB06-5	..SCREW	107107	4
796	MS35338-41	..WASHER	107107	4
800	233N6203-2	..BASEPLATE ASSY- SUPPLIER CODE: V89954 ATTACHING PARTS	107107	1
R - 805	NAS514P632-5	..SCREW -------*-------	107107	4

MISSING ITEM NUMBERS NOT APPLICABLE

– ITEM NOT ILLUSTRATED

BOEING PROPRIETARY - Copyright © - Unpublished Work - See title page for details.

	FIG ITEM	PART NUMBER	1 2 3 4 5 6 7 NOMENCLATURE	EFFECT FROM TO	UNITS PER ASSY
	3				
	810	SF6G6CBB5D	...NUT SUPPLIER CODE: V12324 SPECIFICATION NUMBER: BACN10PA06-6	107107	3
R R R R R	815	PFSC35-38ASEMB	...STUD ASSY SUPPLIER CODE: V72794 SPECIFICATION NUMBER: BACS21DX1B	107107	4
	820	233N6203-3	...BASEPLATE- SUPPLIER CODE: V89954	107107	1
	825	69B46200-15	..STANDOFF	107107	4
	827	233N6203-6	..BRACKET ASSY- SUPPLIER CODE: V89954	107107	RF
	875	BACP10U0600T	.PANEL ASSY	107107	1
	880	BACP10U0037T	.PANEL ASSY	107107	1
	882	285T0555-1	.PANEL ASSY-AIR TRAFFIC CONT SUPPLIER CODE: V89954 ELECTRICAL EQUIP NUMBER: M10140 COMPONENT MAINT MANUAL REF: 34-53-61 FOR OTHER SYS DETAILS SEE: 11-31-05-04 33-13-58-01 34-53-02-01	107107	1
	882	285T0555-3	.PANEL ASSY-AIR TRAFFIC CONT SUPPLIER CODE: V89954 ELECTRICAL EQUIP NUMBER: M10140 COMPONENT MAINT MANUAL REF: 34-53-61 FOR OTHER SYS DETAILS SEE: 11-31-05-04 33-13-58-01 34-53-02-01	107107	1
	884	BAC27TEX3467	..MARKER- USED ON: 285T0555-1	107107	1

MISSING ITEM NUMBERS NOT APPLICABLE

– ITEM NOT ILLUSTRATED

BOEING PROPRIETARY - Copyright © - Unpublished Work - See title page for details.

FIG ITEM	PART NUMBER	1 2 3 4 5 6 7 NOMENCLATURE	EFFECT FROM TO	UNITS PER ASSY
3				
884	BAC27TEX3467	..MARKER- QUALIFIED OPTIONAL DATA: BAC27TEX3467 IS OPT TO BAC27TEX4174 WHEN USED WITH ASSOCIATED ITEMS USED ON: 285T0555-3	107107	1
885	BAC27TEX4174	..MARKER- QUALIFIED OPTIONAL DATA: BAC27TEX3467 IS OPT TO BAC27TEX4174 WHEN USED WITH ASSOCIATED ITEMS USED ON: 285T0555-3	107107	1
886	NAS1801-04-5	..SCREW	107107	12
888	NAS514P440-5P	..SCREW	107107	10
890	NAS514P440-4P	..SCREW	107107	4
892	MS35206-202	..SCREW	107107	4
894	MS35338-40	..WASHER	107107	8
896	AN960-4L	..WASHER	107107	8
898	WCS225-7	..SEAL ASSY-SHAFT SUPPLIER CODE: V51074	107107	2
900	WCS233-1	..SEAL- SUPPLIER CODE: V51074	107107	1
901	285T0580-2	..GASKET ASSY-LCD MODULE SUPPLIER CODE: V89954 OPTIONAL PART: 285T0580-1 V89954 USED ON: 285T0555-3	107107	1
902	285T0580-1	..GASKET-LCD MODULE SUPPLIER CODE: V89954 USED ON: 285T0555-1	107107	1
902	285T0580-1	..GASKET-LCD MODULE SUPPLIER CODE: V89954 OPTIONAL PART: 285T0580-2 V89954 USED ON: 285T0555-3	107107	1

MISSING ITEM NUMBERS NOT APPLICABLE

– ITEM NOT ILLUSTRATED

BOEING PROPRIETARY - Copyright © - Unpublished Work - See title page for details.

FIG ITEM	PART NUMBER	1 2 3 4 5 6 7 NOMENCLATURE	EFFECT FROM TO	UNITS PER ASSY
3				
903	285T1151-1	..GASKET- SUPPLIER CODE: V89954 OPTIONAL PART: 285T1151-2 V89954 USED ON: 285T0555-3	107107	1
903	285T1151-2	..GASKET- SUPPLIER CODE: V89954 OPTIONAL PART: 285T1151-1 V89954 USED ON: 285T0555-3	107107	1
904	285T0548-3	..PANEL ASSY-FRONT SUPPLIER CODE: V89954	107107	1
905	SF6G6CBB5D	...NUT SUPPLIER CODE: V12324 SPECIFICATION NUMBER: BACN10PA06-6	107107	2
906	BACS21DD1B	...STUD ASSY SUPPLIER CODE: V08524 SPECIFICATION NUMBER: BACS21DD1B	107107	4
907	U256-1	...NUT-PRESS SUPPLIER CODE: V46384	107107	4
908	285T0548-13	...PANEL- SUPPLIER CODE: V89954	107107	1
910	285T0549-2	..COVER ASSY- SUPPLIER CODE: V89954	107107	2
911	285T0550-15	..PANEL ASSY-SIDE SUPPLIER CODE: V89954 OPTIONAL PART: 285T0550-3 V89954 285T0550-11 V89954 USED ON: 285T0555-1	107107	1

MISSING ITEM NUMBERS NOT APPLICABLE

– ITEM NOT ILLUSTRATED

BOEING PROPRIETARY - Copyright © - Unpublished Work - See title page for details.

FIG ITEM	PART NUMBER	1 2 3 4 5 6 7 NOMENCLATURE	EFFECT FROM TO	UNITS PER ASSY
3				
911	285T0550-3	..PANEL ASSY-SIDE SUPPLIER CODE: V89954 OPTIONAL PART: 285T0550-11 V89954 285T0550-15 V89954 USED ON: 285T0555-1	107107	1
911	285T0550-11	..PANEL ASSY-SIDE SUPPLIER CODE: V89954 OPTIONAL PART: 285T0550-15 V89954 285T0550-3 V89954 USED ON: 285T0555-1	107107	1
911	285T0550-21	..PANEL ASSY-SIDE SUPPLIER CODE: V89954 OPTIONAL PART: 285T0550-25 V89954 285T0550-27 V89954 USED ON: 285T0555-3	107107	1
911	285T0550-25	..PANEL ASSY-SIDE SUPPLIER CODE: V89954 OPTIONAL PART: 285T0550-21 V89954 285T0550-27 V89954 USED ON: 285T0555-3	107107	1

MISSING ITEM NUMBERS NOT APPLICABLE

– ITEM NOT ILLUSTRATED

BOEING PROPRIETARY - Copyright © - Unpublished Work - See title page for details.

FIG ITEM	PART NUMBER	1 2 3 4 5 6 7 NOMENCLATURE	EFFECT FROM TO	UNITS PER ASSY
3				
911	285T0550-27	..PANEL ASSY-SIDE SUPPLIER CODE: V89954 OPTIONAL PART: 285T0550-21 V89954 285T0550-25 V89954 USED ON: 285T0555-3	107107	1
912	285T0550-12	..PANEL ASSY-SIDE SUPPLIER CODE: V89954 OPTIONAL PART: 285T0550-4 V89954 285T0550-16 V89954 USED ON: 285T0555-1	107107	1
912	285T0550-4	..PANEL ASSY-SIDE SUPPLIER CODE: V89954 OPTIONAL PART: 285T0550-12 V89954 285T0550-16 V89954 USED ON: 285T0555-1	107107	1
912	285T0550-16	..PANEL ASSY-SIDE SUPPLIER CODE: V89954 OPTIONAL PART: 285T0550-4 V89954 285T0550-12 V89954 USED ON: 285T0555-1	107107	1

MISSING ITEM NUMBERS NOT APPLICABLE

– ITEM NOT ILLUSTRATED

BOEING PROPRIETARY - Copyright © - Unpublished Work - See title page for details.

FIG ITEM	PART NUMBER	1 2 3 4 5 6 7 NOMENCLATURE	EFFECT FROM TO	UNITS PER ASSY
3				
912	285T0550-22	..PANEL ASSY-SIDE SUPPLIER CODE: V89954 OPTIONAL PART: 285T0550-26 V89954 285T0550-28 V89954 USED ON: 285T0555-3	107107	1
912	285T0550-26	..PANEL ASSY-SIDE SUPPLIER CODE: V89954 OPTIONAL PART: 285T0550-22 V89954 285T0550-28 V89954 USED ON: 285T0555-3	107107	1
912	285T0550-28	..PANEL ASSY-SIDE SUPPLIER CODE: V89954 OPTIONAL PART: 285T0550-22 V89954 285T0550-26 V89954 USED ON: 285T0555-3	107107	1
913	BACN10XR04	...NUTPLATE- USED ON: 285T0550-15 285T0550-16	107107	4
913	BACN10XR04	...NUTPLATE- USED ON: 285T0550-21 285T0550-22 ATTACHING PARTS	107107	4
- 914	BACR15BA2AD	...RIVET- SIZE DETERMINED ON INSTL. USED ON: 285T0550-15 285T0550-16	107107	8

MISSING ITEM NUMBERS NOT APPLICABLE

- ITEM NOT ILLUSTRATED

BOEING PROPRIETARY - Copyright © - Unpublished Work - See title page for details.

FIG ITEM	PART NUMBER	1 2 3 4 5 6 7 NOMENCLATURE	EFFECT FROM TO	UNITS PER ASSY
3				
- 914	BACR15BA2AD	...RIVET- SIZE DETERMINED ON INSTL. USED ON: 285T0550-21 285T0550-22 -------*-------	107107	8
915	LAC440-1	...NUT-PRESS SUPPLIER CODE: V46384 USED ON: 285T0550-3 285T0550-4 285T0550-11 285T0550-12	107107	4
915	LAC440-1	...NUT-PRESS SUPPLIER CODE: V46384 USED ON: 285T0550-21 285T0550-22	107107	4
916	F22A27M22-40	...NUT- SUPPLIER CODE: V72962 USED ON: 285T0550-3 285T0550-4 285T0550-11 285T0550-12 285T0550-15 285T0550-16 285T0550-21 285T0550-22 ATTACHING PARTS	107107	2
- 917	BACR15BA2AD	...RIVET- SIZE DETERMINED ON INSTL. -------*-------	107107	4
918	FE0440EF	...NUT-PRESS SUPPLIER CODE: V46384 USED ON: 285T0550-3 285T0550-4 285T0550-11 285T0550-12 285T0550-15 285T0550-16 285T0550-21 285T0550-22	107107	2

MISSING ITEM NUMBERS NOT APPLICABLE

- ITEM NOT ILLUSTRATED

BOEING PROPRIETARY - Copyright © - Unpublished Work - See title page for details.

FIG ITEM	PART NUMBER	1 2 3 4 5 6 7 NOMENCLATURE	EFFECT FROM TO	UNITS PER ASSY
3				
919	FE0440EF	...NUT-PRESS SUPPLIER CODE: V46384 USED ON: 285T0550-11 285T0550-12 285T0550-15 285T0550-16	107107	4
919	FE0440EF	...NUT-PRESS SUPPLIER CODE: V46384 USED ON: 285T0550-21 285T0550-22	107107	4
919	FE0X440	...NUT-PRESS SUPPLIER CODE: V46384 USED ON: 285T0550-3 285T0550-4	107107	4
920	285T0550-7	...PANEL- SUPPLIER CODE: V89954 USED ON: 285T0550-3 285T0550-11	107107	1
920	285T0550-19	...PANEL- SUPPLIER CODE: V89954 USED ON: 285T0550-15	107107	1
920	285T0550-23	...PANEL- SUPPLIER CODE: V89954 USED ON: 285T0550-21	107107	1
921	285T0550-8	...PANEL- SUPPLIER CODE: V89954 USED ON: 285T0550-4 285T0550-12	107107	1
921	285T0550-20	...PANEL- SUPPLIER CODE: V89954 USED ON: 285T0550-16	107107	1

MISSING ITEM NUMBERS NOT APPLICABLE

— ITEM NOT ILLUSTRATED

BOEING PROPRIETARY - Copyright © - Unpublished Work - See title page for details.

FIG ITEM	PART NUMBER	1 2 3 4 5 6 7 NOMENCLATURE	EFFECT FROM TO	UNITS PER ASSY
3				
921	285T0550-24	...PANEL- SUPPLIER CODE: V89954 USED ON: 285T0550-22	107107	1
922	285T0560-1	..MODULE ASSY-ELECT. SUPPLIER CODE: V89954 OPTIONAL PART: 285T0560-2 V89954	107107	1
922	285T0560-2	..MODULE ASSY-ELECT. SUPPLIER CODE: V89954 OPTIONAL PART: 285T0560-1 V89954	107107	1
924	285T0568-1	...DEVICE ASSY-PROGRAMMED MEMORY SUPPLIER CODE: V89954	107107	2
926	BAC27TEX2007	....DECAL- OPTIONAL PART: WHB673-1D0X0D5 V85480	107107	1
926	WHB673-1D0X0D5	....DECAL- SUPPLIER CODE: V85480 OPTIONAL PART: BAC27TEX2007	107107	1
928	285T0546-3	..PANEL-REAR SUPPLIER CODE: V89954	107107	1
930	285T0553-4	.PANEL ASSY-ILS CONT SUPPLIER CODE: V89954 ELECTRICAL EQUIP NUMBER: M00087 COMPONENT MAINT MANUAL REF: 34-31-61 FOR OTHER SYS DETAILS SEE: 11-31-05-04 33-13-58-01 34-31-02-01	107107	1

MISSING ITEM NUMBERS NOT APPLICABLE

– ITEM NOT ILLUSTRATED

BOEING PROPRIETARY - Copyright © - Unpublished Work - See title page for details.

FIG ITEM	PART NUMBER	1 2 3 4 5 6 7 NOMENCLATURE	EFFECT FROM TO	UNITS PER ASSY
3				
930	285T0553-2	.PANEL ASSY-ILS CONT SUPPLIER CODE: V89954 ELECTRICAL EQUIP NUMBER: M00087 COMPONENT MAINT MANUAL REF: 34-31-61 FOR OTHER SYS DETAILS SEE: 11-31-05-04 33-13-58-01 34-31-02-01	107107	1
930	285T0553-1	.PANEL ASSY-ILS CONT SUPPLIER CODE: V89954 ELECTRICAL EQUIP NUMBER: M00087 COMPONENT MAINT MANUAL REF: 34-31-61 FOR OTHER SYS DETAILS SEE: 11-31-05-04 33-13-58-01 34-31-02-01	107107	1
930	285T0553-3	.PANEL ASSY-ILS CONT SUPPLIER CODE: V89954 ELECTRICAL EQUIP NUMBER: M00087 FOR OTHER SYS DETAILS SEE: 11-31-05-04 33-13-58-01 34-31-02-01	107107	1
932	BAC27TEX3465	..MARKER-ALUMINUM FOIL SUPPLIER CODE: V89954 QUALIFIED OPTIONAL DATA: BAC27TEX3465 OR BAC27TEX4173 OR BAC27TEX4812 ARE ALL OPT WHEN USED WITH ASSOCIATED ITEMS USED ON: 285T0553-4	107107	1
932	BAC27TEX3465	..MARKER-ALUMINUM FOIL SUPPLIER CODE: V89954 USED ON: 285T0553-1 285T0553-2 285T0553-3	107107	1

MISSING ITEM NUMBERS NOT APPLICABLE

– ITEM NOT ILLUSTRATED

BOEING PROPRIETARY - Copyright © - Unpublished Work - See title page for details.

FIG ITEM	PART NUMBER	1 2 3 4 5 6 7 NOMENCLATURE	EFFECT FROM TO	UNITS PER ASSY
3				
934	BAC27TEX4173	..MARKER-ALUMINUM FOIL SUPPLIER CODE: V89954 QUALIFIED OPTIONAL DATA: BAC27TEX3465 OR BAC27TEX4173 OR BAC27TEX4812 ARE ALL OPT WHEN USED WITH ASSOCIATED ITEMS USED ON: 285T0553-4	107107	1
936	BAC27TEX4812	..MARKER-ALUMINUM FOIL SUPPLIER CODE: V89954 QUALIFIED OPTIONAL DATA: BAC27TEX3465 OR BAC27TEX4173 OR BAC27TEX4812 ARE ALL OPT WHEN USED WITH ASSOCIATED ITEMS USED ON: 285T0553-4	107107	1
938	MS35206-202	..SCREW	107107	4
940	NAS514P440-4P	..SCREW	107107	4
942	NAS514P440-5P	..SCREW	107107	12
944	NAS1801-04-5	..SCREW	107107	6
946	MS35338-40	..WASHER	107107	2
948	AN960-4L	..WASHER	107107	2
950	WCS225-7	..SEAL ASSY-SHAFT SUPPLIER CODE: V51074	107107	2
952	285T0580-1	..GASKET-LCD MODULE SUPPLIER CODE: V89954 QUALIFIED OPTIONAL DATA: 285T0580-1 OPT TO 285T0580-2 WHEN USED WITH ASSOCIATED ITEMS USED ON: 285T0553-4	107107	2
952	285T0580-1	..GASKET-LCD MODULE SUPPLIER CODE: V89954 USED ON: 285T0553-1 285T0553-2 285T0553-3	107107	2

MISSING ITEM NUMBERS NOT APPLICABLE

– ITEM NOT ILLUSTRATED

BOEING PROPRIETARY - Copyright © - Unpublished Work - See title page for details.

FIG ITEM	PART NUMBER	1 2 3 4 5 6 7 NOMENCLATURE	EFFECT FROM TO	UNITS PER ASSY
3				
954	285T0580-2	..GASKET ASSY-LCD MODULE SUPPLIER CODE: V89954 QUALIFIED OPTIONAL DATA: 285T0580-1 OPT TO 285T0580-2 WHEN USED WITH ASSOCIATED ITEMS USED ON: 285T0553-4	107107	2
956	285T1151-1	..GASKET- SUPPLIER CODE: V89954 QUALIFIED OPTIONAL DATA: 285T1151-1 OPT TO 285T1151-2 WHEN USED WITH ASSOCIATED ITEMS USED ON: 285T0553-4	107107	2
956	285T1151-2	..GASKET- SUPPLIER CODE: V89954 QUALIFIED OPTIONAL DATA: 285T1151-1 OPT TO 285T1151-2 WHEN USED WITH ASSOCIATED ITEMS USED ON: 285T0553-4	107107	2
958	285T0549-1	..COVER ASSY- SUPPLIER CODE: V89954	107107	2
960	285T0548-1	..PANEL ASSY-FRONT SUPPLIER CODE: V89954	107107	1
962	BACS21DD1B	...STUD ASSY SUPPLIER CODE: V08524 SPECIFICATION NUMBER: BACS21DD1B	107107	4
964	SF6G6CBB5D	...NUT SUPPLIER CODE: V12324 SPECIFICATION NUMBER: BACN10PA06-6	107107	2
966	U256-1	...NUT-PRESS SUPPLIER CODE: V46384	107107	8
968	285T0548-11	...PANEL- SUPPLIER CODE: V89954	107107	1

MISSING ITEM NUMBERS NOT APPLICABLE

— ITEM NOT ILLUSTRATED

BOEING PROPRIETARY - Copyright © - Unpublished Work - See title page for details.

FIG ITEM	PART NUMBER	1 2 3 4 5 6 7 NOMENCLATURE	EFFECT FROM TO	UNITS PER ASSY
3				
970	285T0550-1	..PANEL ASSY-SIDE SUPPLIER CODE: V89954 OPTIONAL PART: 285T0550-9 V89954 285T0550-13 V89954	107107	1
970	285T0550-9	..PANEL ASSY-SIDE SUPPLIER CODE: V89954 OPTIONAL PART: 285T0550-1 V89954 285T0550-13 V89954	107107	1
970	285T0550-13	..PANEL ASSY-SIDE SUPPLIER CODE: V89954 OPTIONAL PART: 285T0550-1 V89954 285T0550-9 V89954	107107	1
972	285T0550-2	..PANEL ASSY-SIDE SUPPLIER CODE: V89954 OPTIONAL PART: 285T0550-10 V89954 285T0550-14 V89954	107107	1
972	285T0550-10	..PANEL ASSY-SIDE SUPPLIER CODE: V89954 OPTIONAL PART: 285T0550-2 V89954 285T0550-14 V89954	107107	1
972	285T0550-14	..PANEL ASSY-SIDE SUPPLIER CODE: V89954 OPTIONAL PART: 285T0550-2 V89954 285T0550-10 V89954	107107	1

MISSING ITEM NUMBERS NOT APPLICABLE

– ITEM NOT ILLUSTRATED

BOEING PROPRIETARY - Copyright © - Unpublished Work - See title page for details.

FIG ITEM	PART NUMBER	1 2 3 4 5 6 7 NOMENCLATURE	EFFECT FROM TO	UNITS PER ASSY
3				
974	FE0440EF	...NUT-PRESS SUPPLIER CODE: V46384	107107	2
976	FE0440EF	...NUT-PRESS SUPPLIER CODE: V46384 USED ON: 285T0550-9 285T0550-13 285T0550-10 285T0550-14	107107	4
976	FE0X440	...NUT-PRESS SUPPLIER CODE: V46384 USED ON: 285T0550-1 285T0550-2	107107	4
978	LAC440-1	...NUT-PRESS SUPPLIER CODE: V46384 USED ON: 285T0550-1 285T0550-9 285T0550-2 285T0550-10	107107	4
980	BACN10XR04	...NUTPLATE- USED ON: 285T0550-13 285T0550-14 ATTACHING PARTS	107107	4
- 982	BACR15BA2AD	...RIVET- SIZE DETERMINED ON INSTL. -------*-------	107107	8
984	F22A27M22-40	...NUT-ANCHOR SUPPLIER CODE: V0217B ATTACHING PARTS	107107	2
- 986	BACR15BA2AD	...RIVET- SIZE DETERMINED ON INSTL. -------*-------	107107	4
988	285T0550-5	...PANEL- SUPPLIER CODE: V89954 USED ON: 285T0550-1 285T0550-9	107107	1

MISSING ITEM NUMBERS NOT APPLICABLE

- ITEM NOT ILLUSTRATED

BOEING PROPRIETARY - Copyright © - Unpublished Work - See title page for details.

FIG ITEM	PART NUMBER	1 2 3 4 5 6 7 NOMENCLATURE	EFFECT FROM TO	UNITS PER ASSY
3				
988	285T0550-17	...PANEL- SUPPLIER CODE: V89954 USED ON: 285T0550-13	107107	1
990	285T0550-6	...PANEL- SUPPLIER CODE: V89954 USED ON: 285T0550-2 285T0550-10	107107	1
990	285T0550-18	...PANEL- SUPPLIER CODE: V89954 USED ON: 285T0550-14	107107	1
992	285T0558-3	..MODULE ASSY-ELECT. SUPPLIER CODE: V89954 QUALIFIED OPTIONAL DATA: 285T0558-3 OPT TO 285T0558-10 WHEN USED WITH ASSOCIATED ITEMS USED ON: 285T0553-4	107107	1
992	285T0558-10	..MODULE ASSY-ELECT. SUPPLIER CODE: V89954 QUALIFIED OPTIONAL DATA: 285T0558-3 OPT TO 285T0558-10 WHEN USED WITH ASSOCIATED ITEMS USED ON: 285T0553-4	107107	1
992	285T0558-1	..MODULE ASSY-ELECT. SUPPLIER CODE: V89954 USED ON: 285T0553-4	107107	1
992	285T0558-2	..MODULE ASSY-ELECT. SUPPLIER CODE: V89954 USED ON: 285T0553-4	107107	1

MISSING ITEM NUMBERS NOT APPLICABLE

— ITEM NOT ILLUSTRATED

BOEING PROPRIETARY - Copyright © - Unpublished Work - See title page for details.

FIG ITEM	PART NUMBER	1 2 3 4 5 6 7 NOMENCLATURE	EFFECT FROM TO	UNITS PER ASSY
3				
992	285T0558-1	..MODULE ASSY-ELECT. SUPPLIER CODE: V89954 USED ON: 285T0553-1 285T0553-3	107107	1
992	285T0558-2	..MODULE ASSY-ELECT. SUPPLIER CODE: V89954 QUALIFIED OPTIONAL DATA: 285T0558-2 OPT TO 285T0558-9 WHEN USED WITH ASSOCIATED ITEMS USED ON: 285T0553-2	107107	1
992	285T0558-9	..MODULE ASSY-ELECT. SUPPLIER CODE: V89954 QUALIFIED OPTIONAL DATA: 285T0558-2 OPT TO 285T0558-9 WHEN USED WITH ASSOCIATED ITEMS USED ON: 285T0553-2	107107	1
992	285T0558-1	..MODULE ASSY-ELECT. SUPPLIER CODE: V89954 USED ON: 285T0553-2	107107	1
994	285T0566-1	...PMD ASSY- SUPPLIER CODE: V89954	107107	3
996	BAC27TEX2007	....DECAL- OPTIONAL PART: WHB673-1-0X0-5 V85480 DAT59-652 V85480	107107	1
996	WHB673-1-0X0-5	....DECAL- SUPPLIER CODE: V85480 OPTIONAL PART: BAC27TEX2007 DAT59-652 V85480	107107	1

MISSING ITEM NUMBERS NOT APPLICABLE

– ITEM NOT ILLUSTRATED

BOEING PROPRIETARY - Copyright © - Unpublished Work - See title page for details.

FIG ITEM	PART NUMBER	1 2 3 4 5 6 7 NOMENCLATURE	EFFECT FROM TO	UNITS PER ASSY
3				
996	DAT59-652	....DECAL- SUPPLIER CODE: V85480 OPTIONAL PART: BAC27TEX2007 WHB673-1-0X0-5 V85480	107107	1
998	285T0546-1	..PANEL-REAR SUPPLIER CODE: V89954	107107	1

MISSING ITEM NUMBERS NOT APPLICABLE

– ITEM NOT ILLUSTRATED

BOEING PROPRIETARY - Copyright © - Unpublished Work - See title page for details.

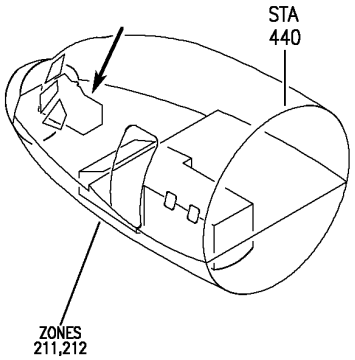

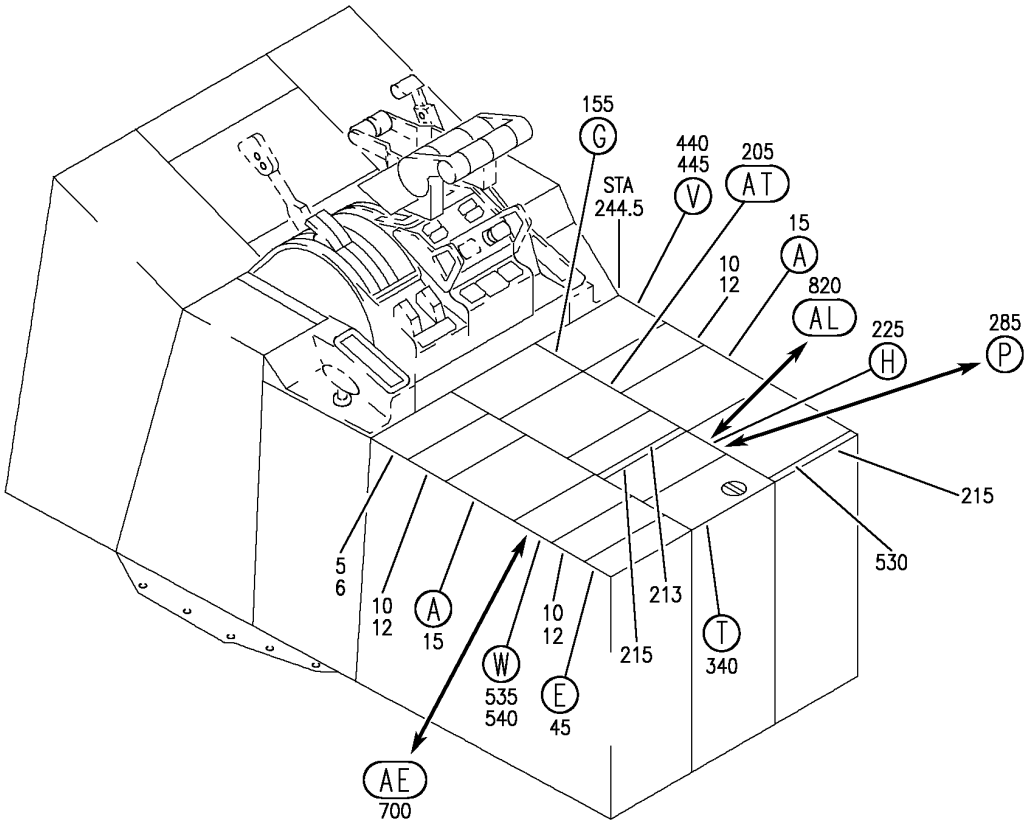

Y 31113625 SHT 1 REV 331

PANEL INSTL-P8 ELECTRONICS (CONTROL STAND AFT ELECTRONIC PANEL ONLY)
FIGURE 25 (SHEET 1)

BOEING PROPRIETARY - Copyright © - Unpublished Work - See title page for details.

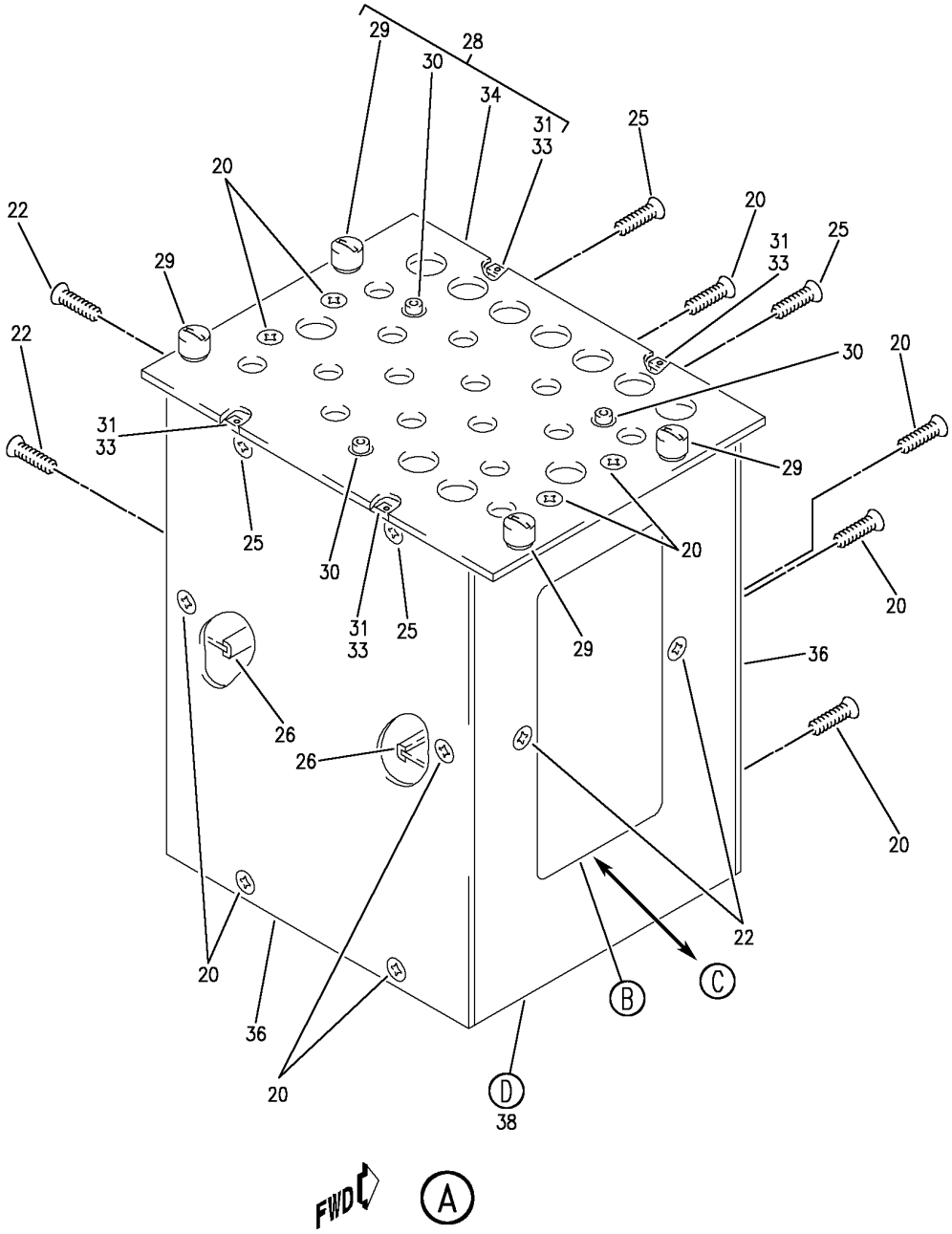

Y 31113625 SHT 2 REV 256

PANEL INSTL-P8 ELECTRONICS (CONTROL STAND AFT ELECTRONIC PANEL ONLY)
FIGURE 25 (SHEET 2)

BOEING PROPRIETARY - Copyright © - Unpublished Work - See title page for details.

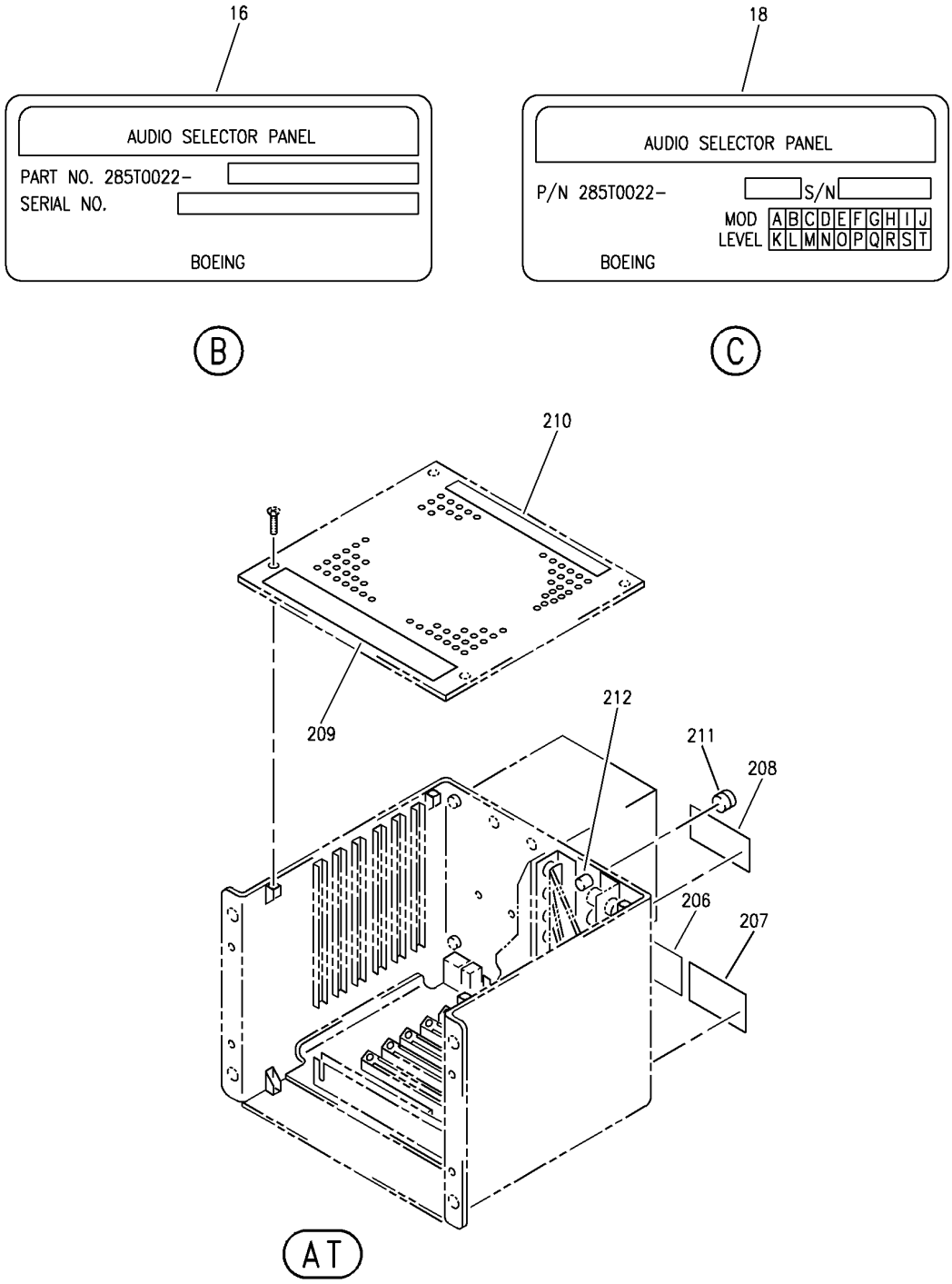

Y 31113625 SHT 3 REV 288

PANEL INSTL-P8 ELECTRONICS (CONTROL STAND AFT ELECTRONIC PANEL ONLY)
FIGURE 25 (SHEET 3)

BOEING PROPRIETARY - Copyright © - Unpublished Work - See title page for details.

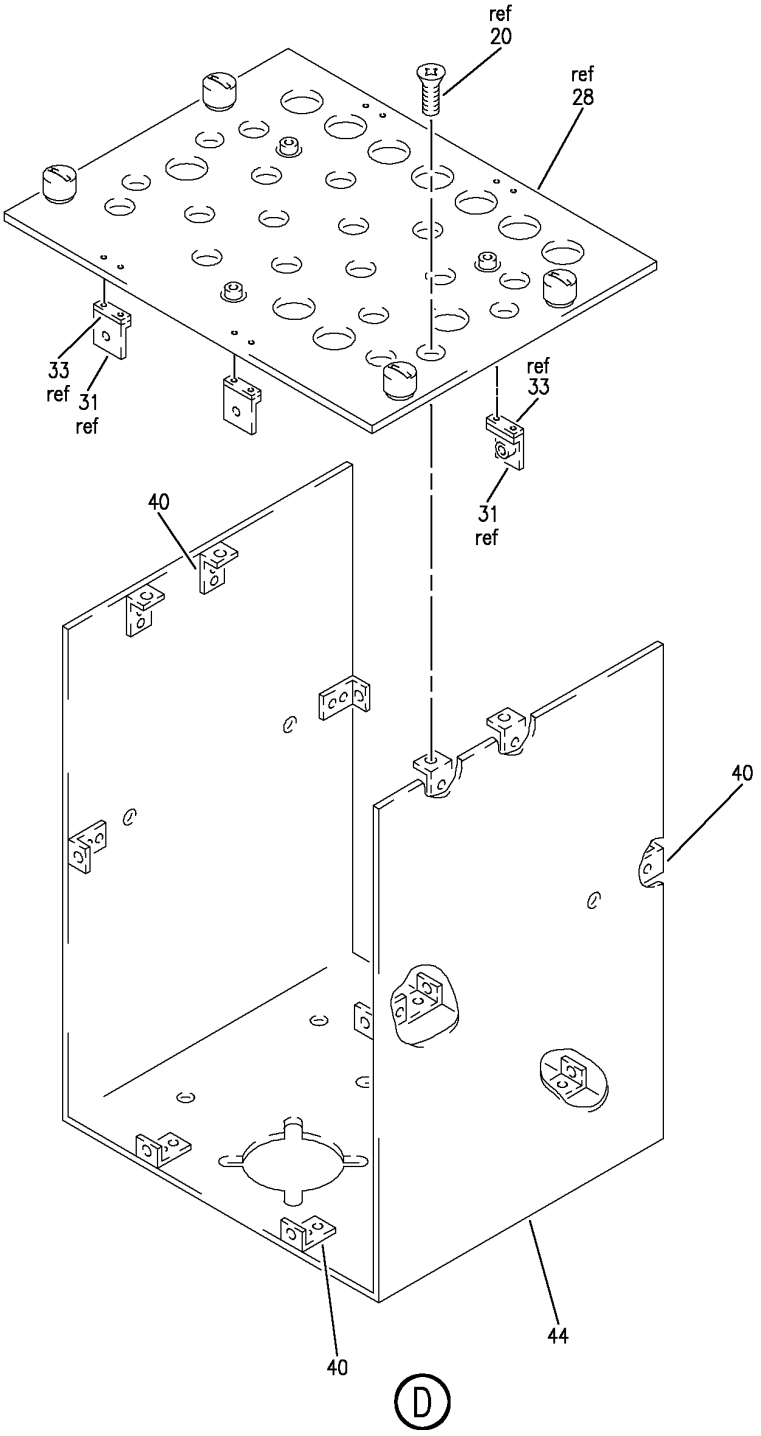

Y 31113625 SHT 4 REV 256

PANEL INSTL-P8 ELECTRONICS (CONTROL STAND AFT ELECTRONIC PANEL ONLY)
FIGURE 25 (SHEET 4)

BOEING PROPRIETARY - Copyright © - Unpublished Work - See title page for details.

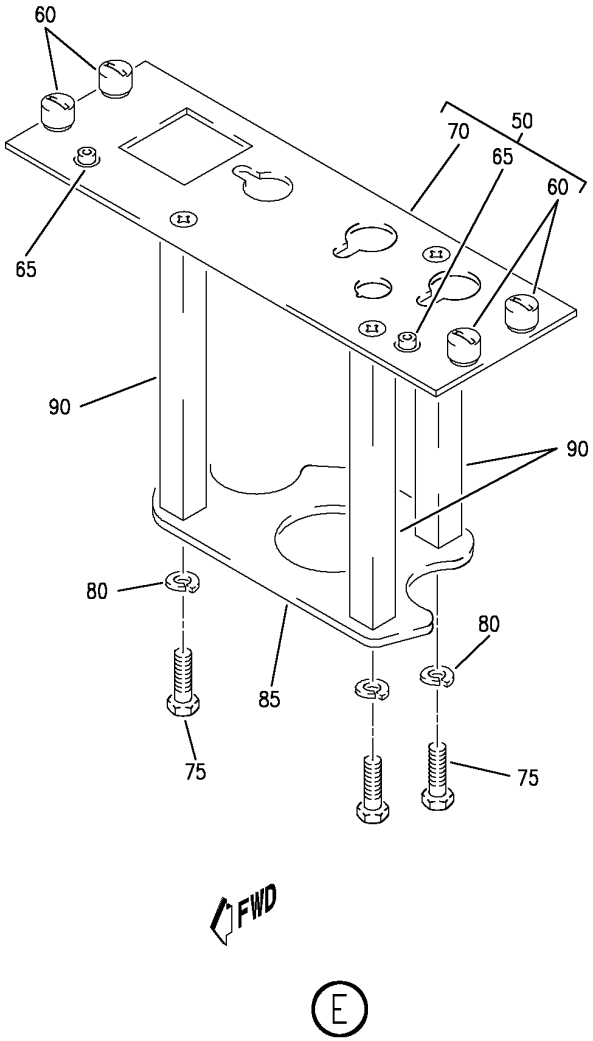

Y 31113625 SHT 5 REV 331

PANEL INSTL-P8 ELECTRONICS (CONTROL STAND AFT ELECTRONIC PANEL ONLY)
FIGURE 25 (SHEET 5)

BOEING PROPRIETARY - Copyright © - Unpublished Work - See title page for details.

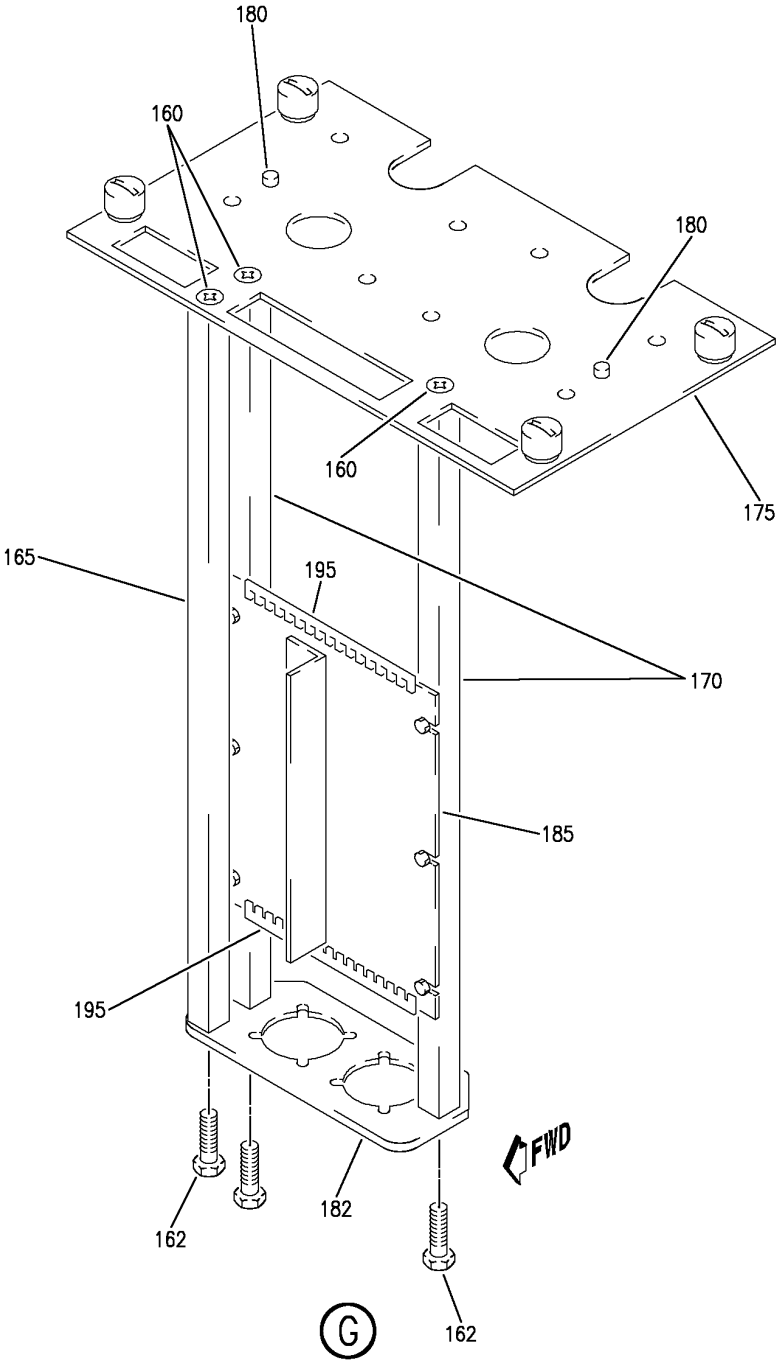

Y 31113625 SHT 6 REV 256

PANEL INSTL-P8 ELECTRONICS (CONTROL STAND AFT ELECTRONIC PANEL ONLY)
FIGURE 25 (SHEET 6)

BOEING PROPRIETARY - Copyright © - Unpublished Work - See title page for details.

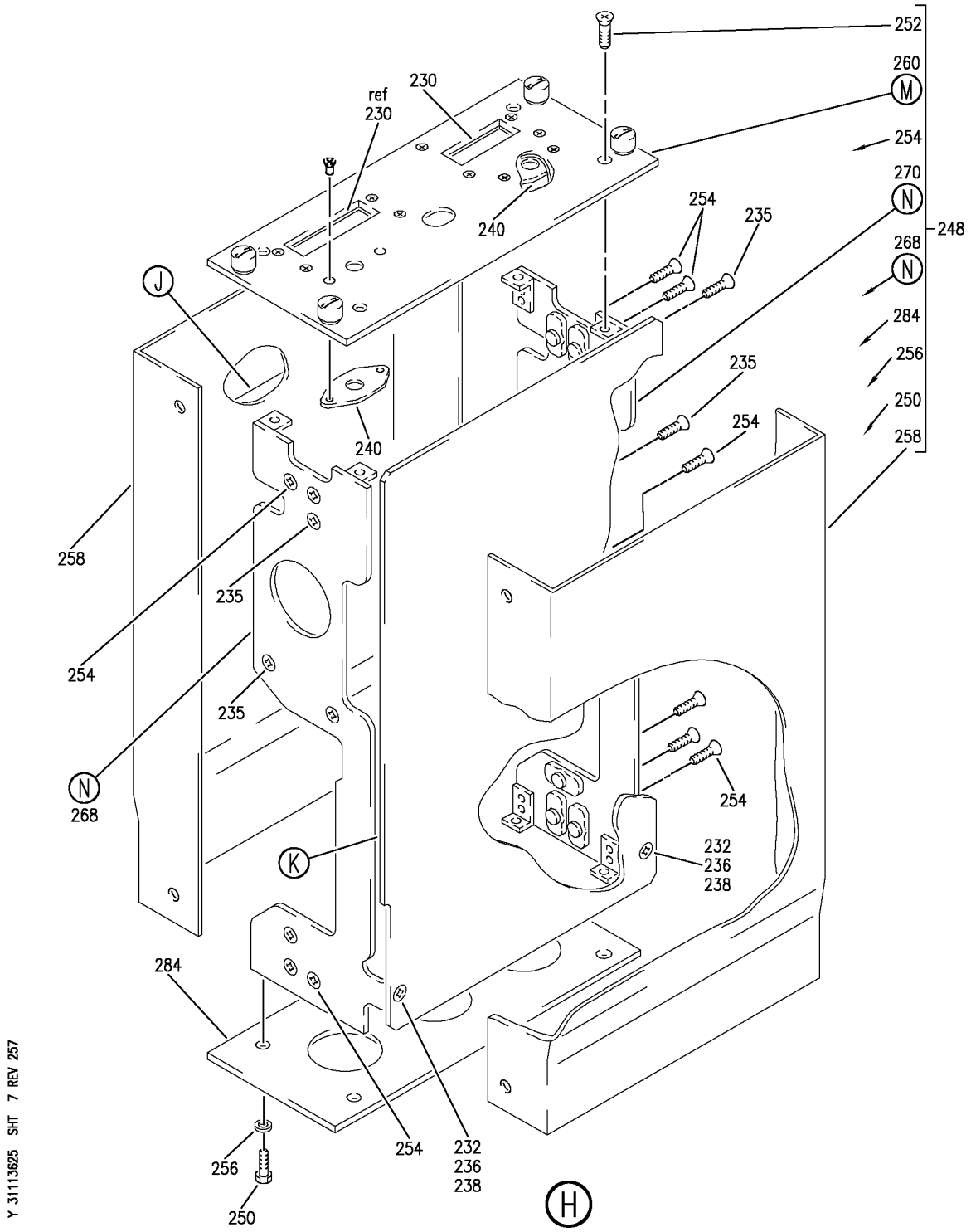

PANEL INSTL-P8 ELECTRONICS (CONTROL STAND AFT ELECTRONIC PANEL ONLY)
FIGURE 25 (SHEET 7)

BOEING PROPRIETARY - Copyright © - Unpublished Work - See title page for details.

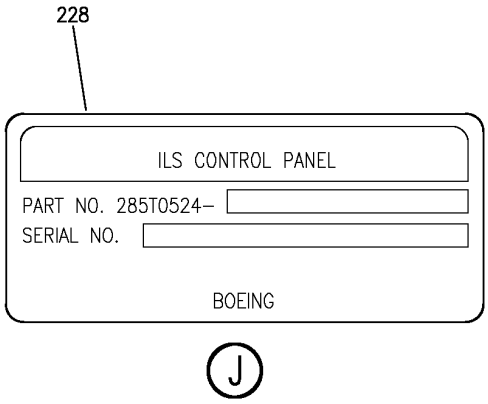

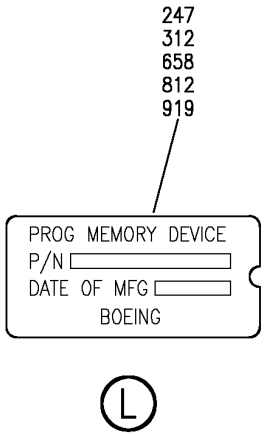

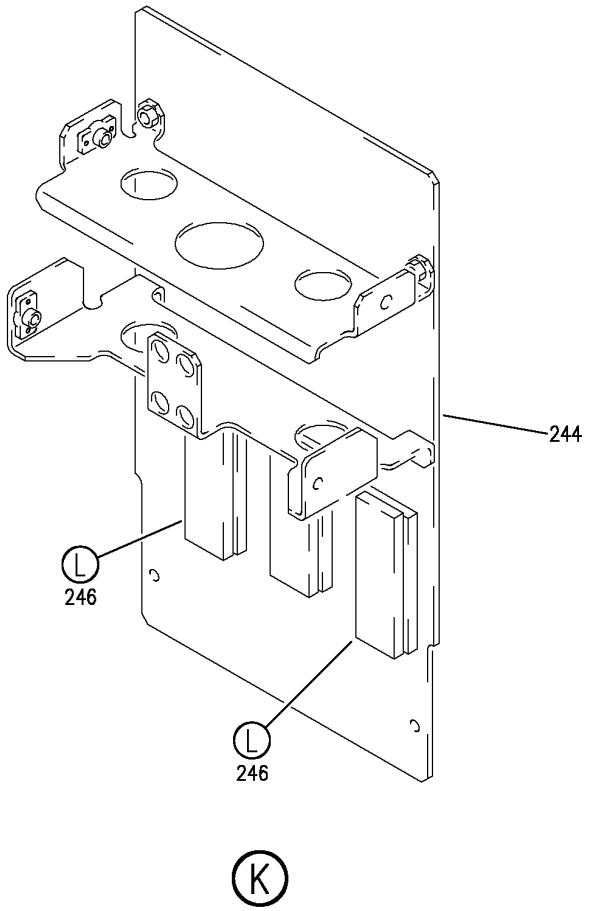

Y 31113625 SHT 8 REV 256

PANEL INSTL-P8 ELECTRONICS (CONTROL STAND AFT ELECTRONIC PANEL ONLY)
FIGURE 25 (SHEET 8)

BOEING PROPRIETARY - Copyright © - Unpublished Work - See title page for details.

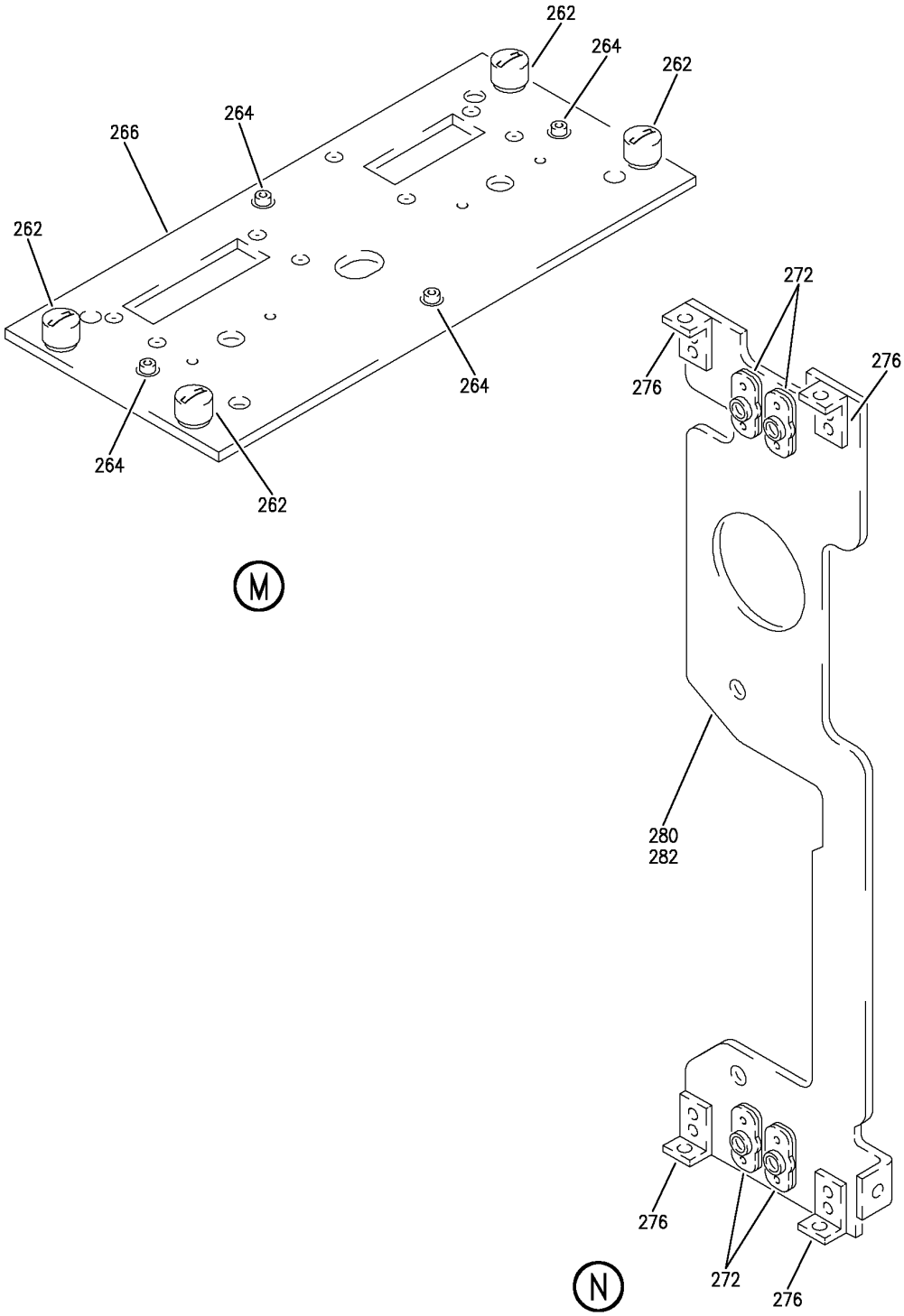

PANEL INSTL-P8 ELECTRONICS (CONTROL STAND AFT ELECTRONIC PANEL ONLY)
FIGURE 25 (SHEET 9)

BOEING PROPRIETARY - Copyright © - Unpublished Work - See title page for details.

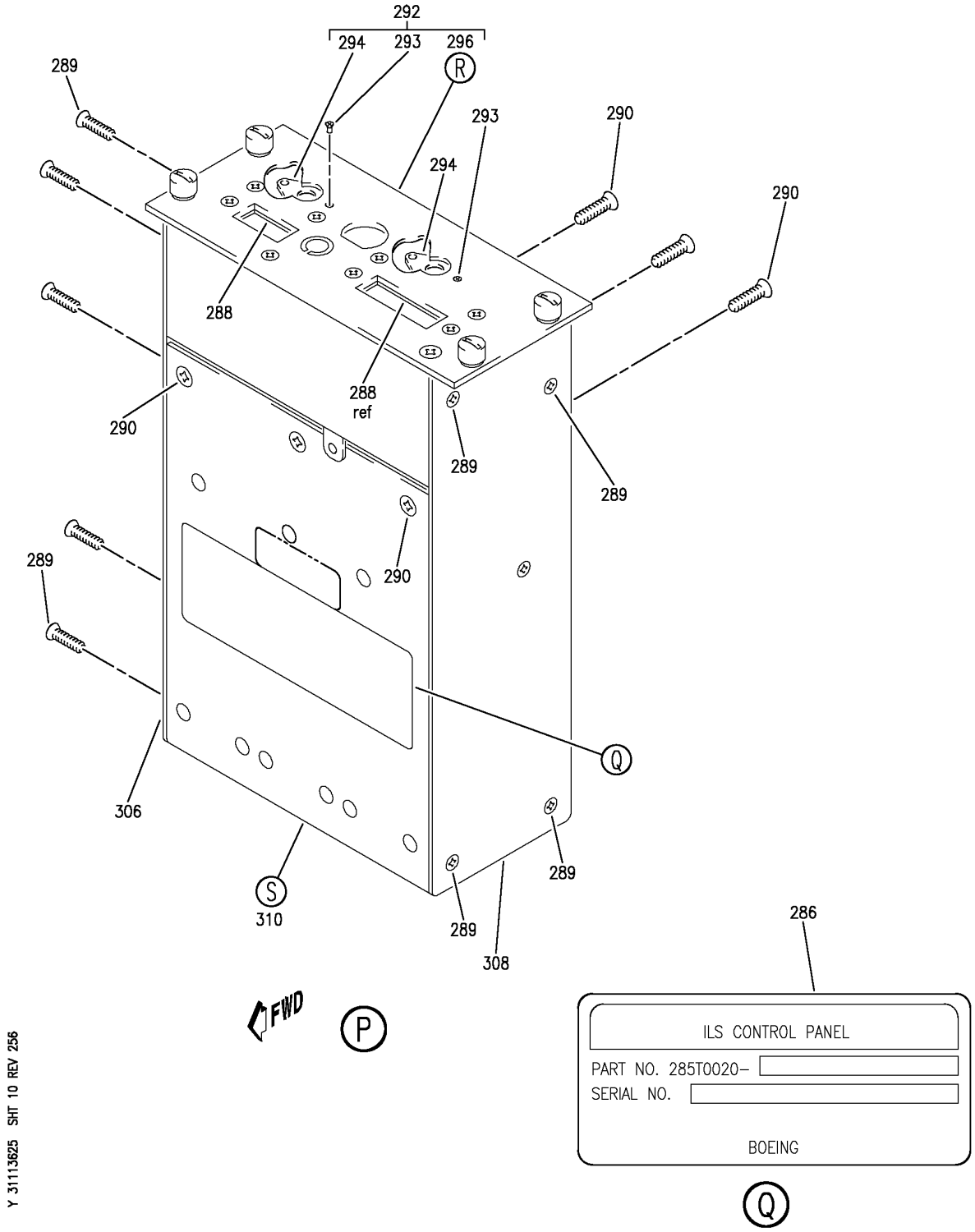

PANEL INSTL-P8 ELECTRONICS (CONTROL STAND AFT ELECTRONIC PANEL ONLY)
FIGURE 25 (SHEET 10)

BOEING PROPRIETARY - Copyright © - Unpublished Work - See title page for details.

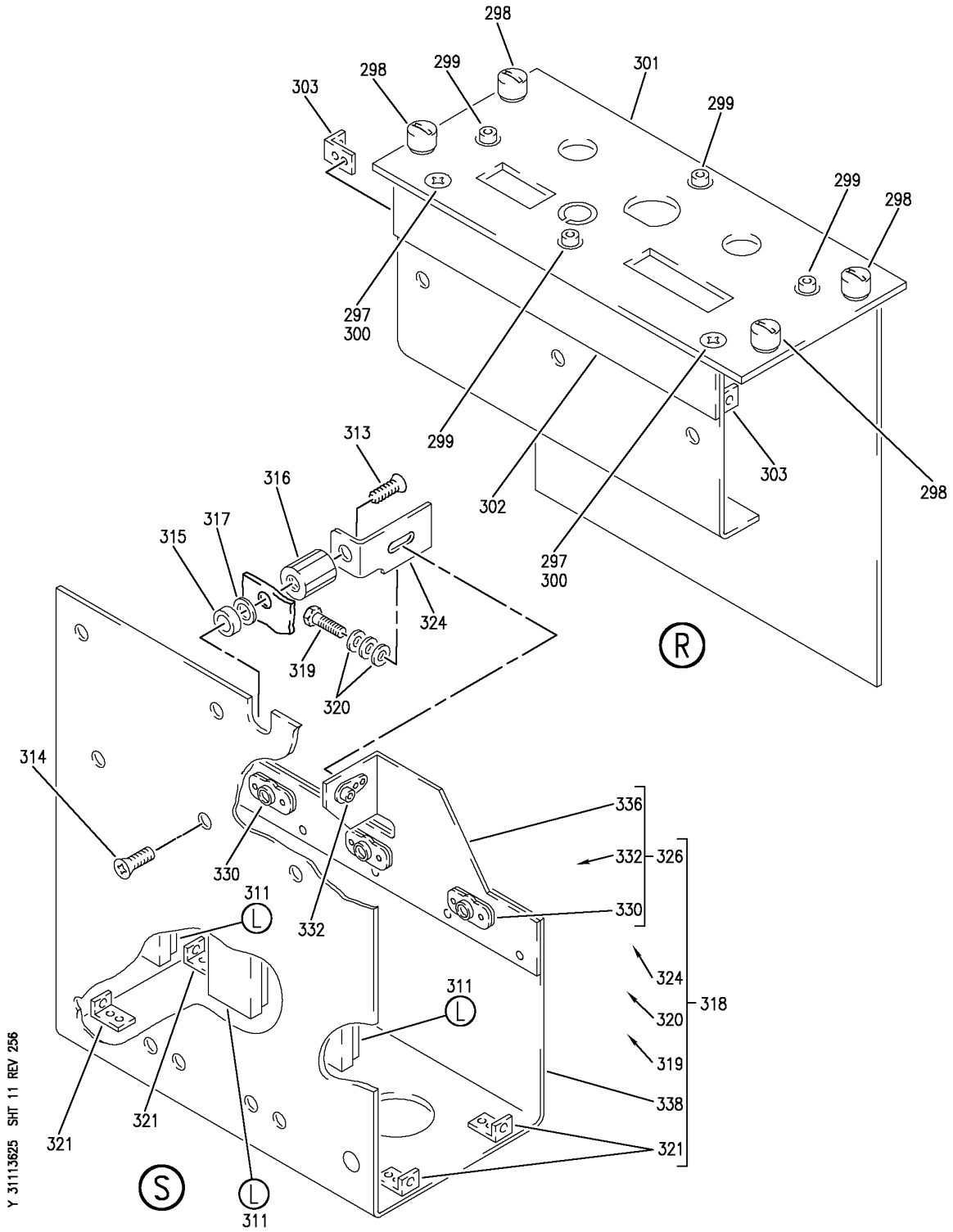

PANEL INSTL-P8 ELECTRONICS (CONTROL STAND AFT ELECTRONIC PANEL ONLY)
FIGURE 25 (SHEET 11)

BOEING PROPRIETARY - Copyright © - Unpublished Work - See title page for details.

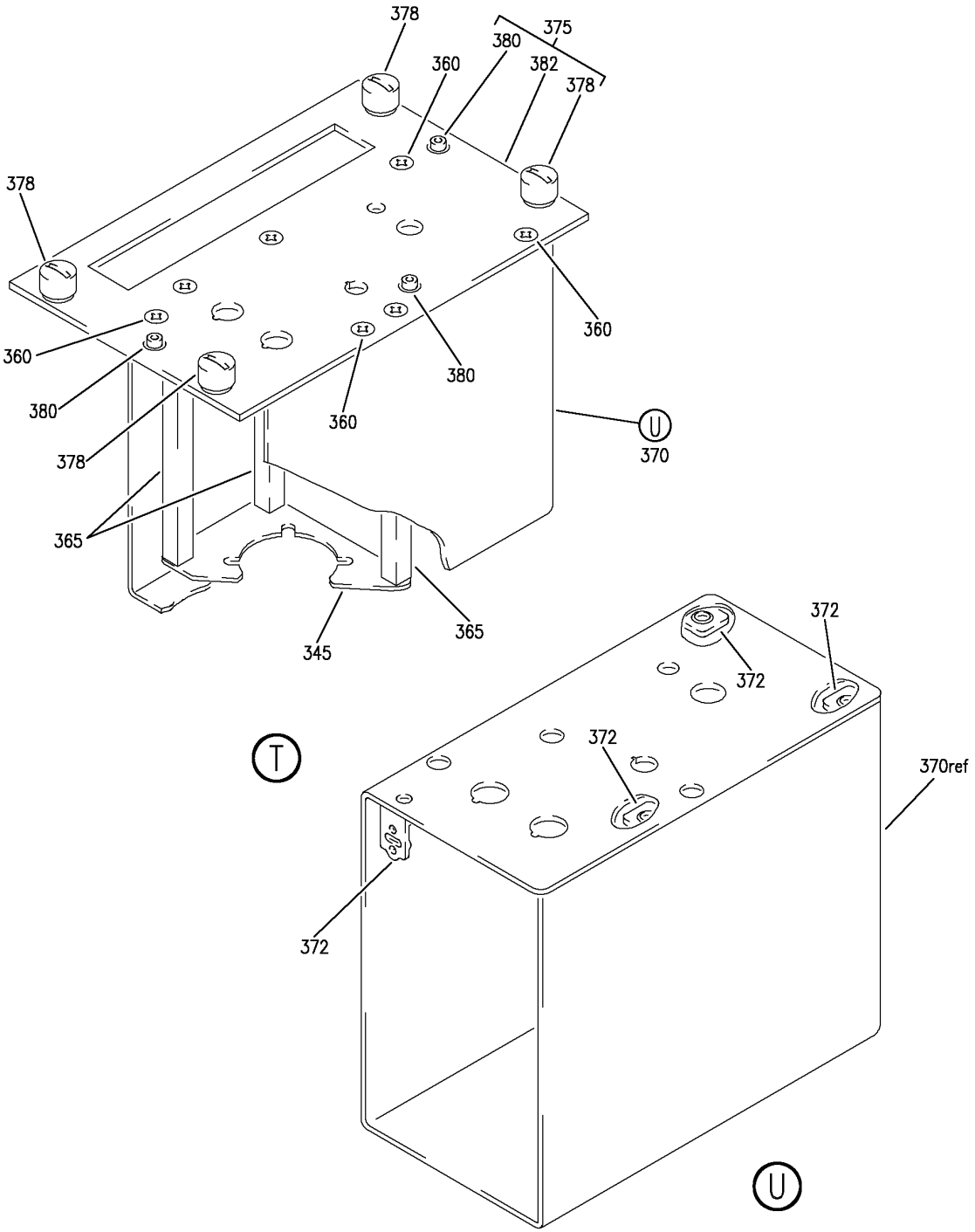

PANEL INSTL-P8 ELECTRONICS (CONTROL STAND AFT ELECTRONIC PANEL ONLY)
FIGURE 25 (SHEET 12)

BOEING PROPRIETARY - Copyright © - Unpublished Work - See title page for details.

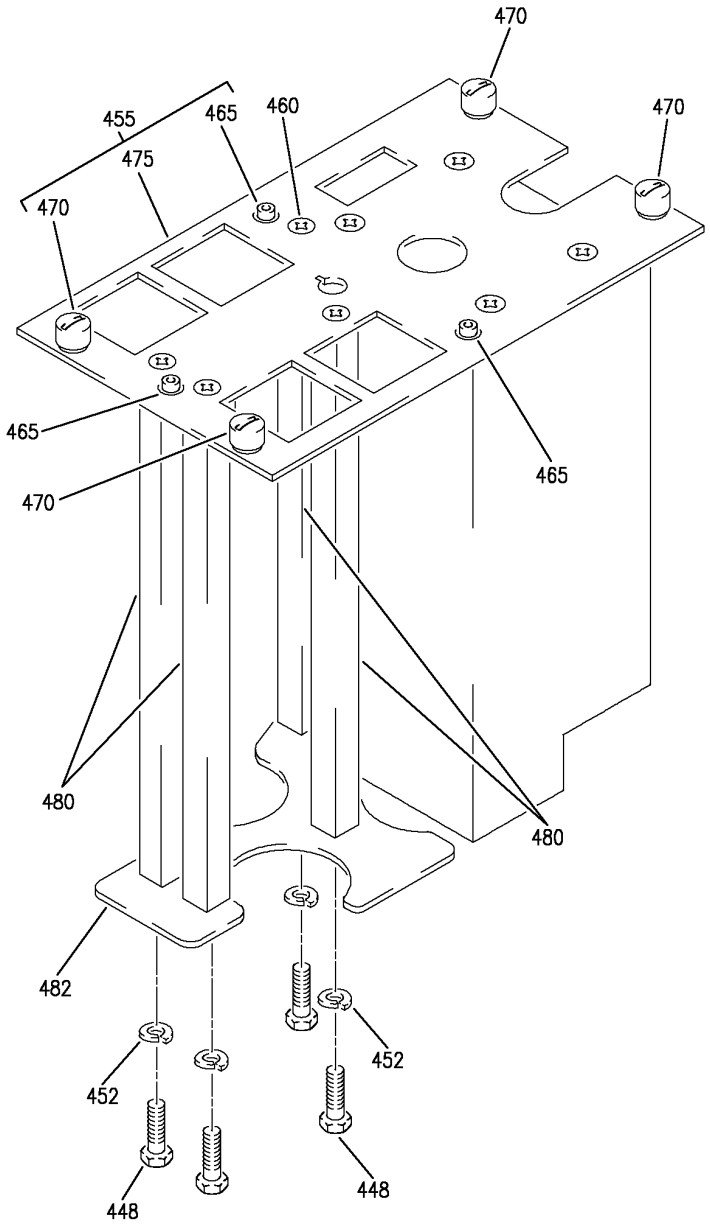

Y 31113625 SHT 13 REV 331

PANEL INSTL-P8 ELECTRONICS (CONTROL STAND AFT ELECTRONIC PANEL ONLY)
FIGURE 25 (SHEET 13)

BOEING PROPRIETARY - Copyright © - Unpublished Work - See title page for details.

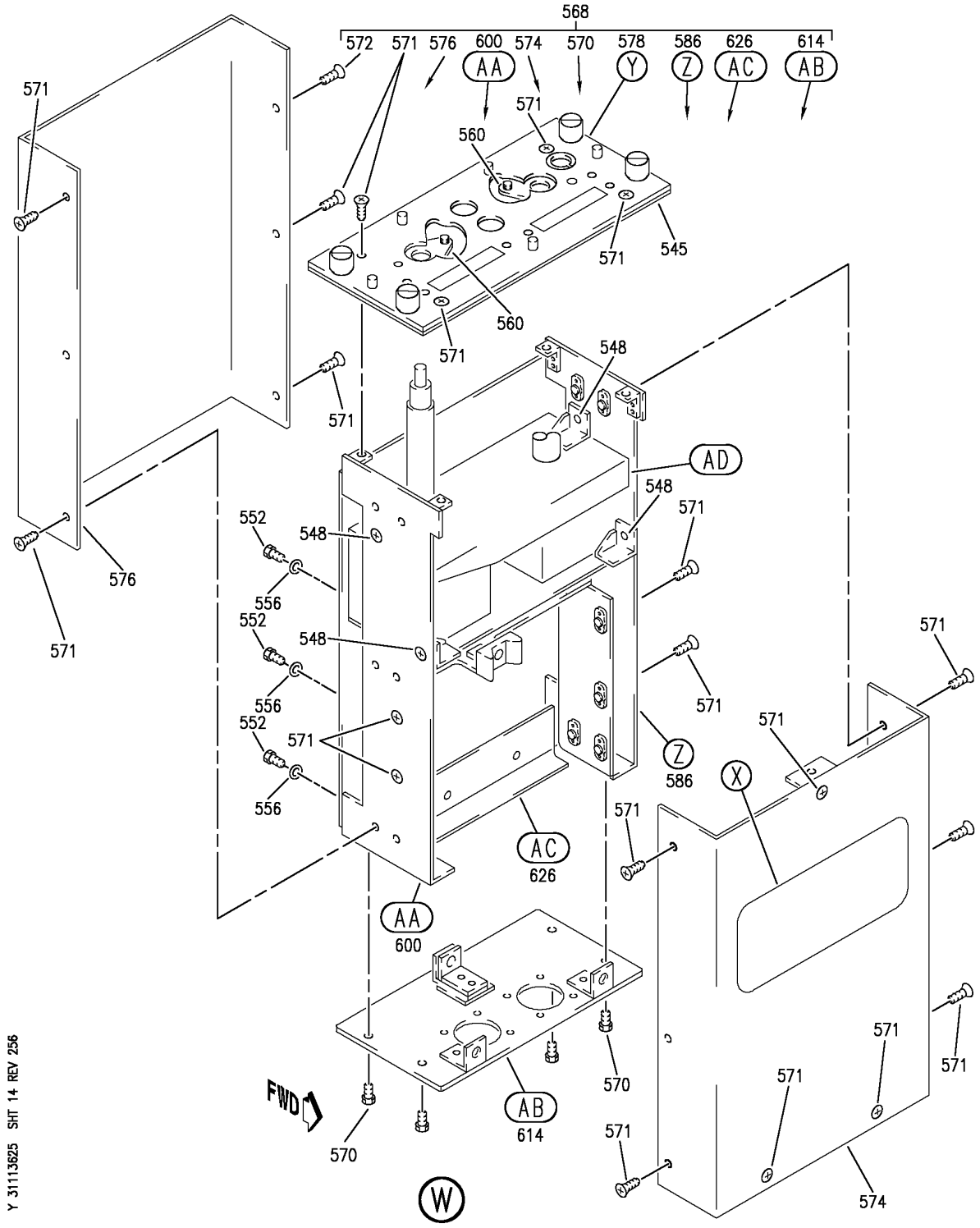

PANEL INSTL-P8 ELECTRONICS (CONTROL STAND AFT ELECTRONIC PANEL ONLY)
FIGURE 25 (SHEET 14)

BOEING PROPRIETARY - Copyright © - Unpublished Work - See title page for details.

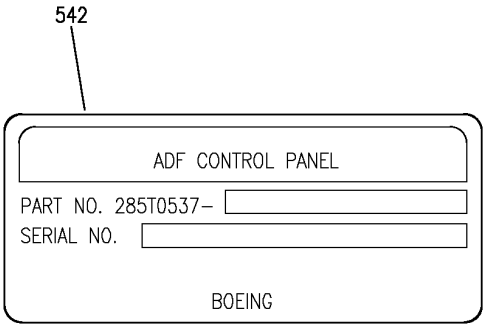

X

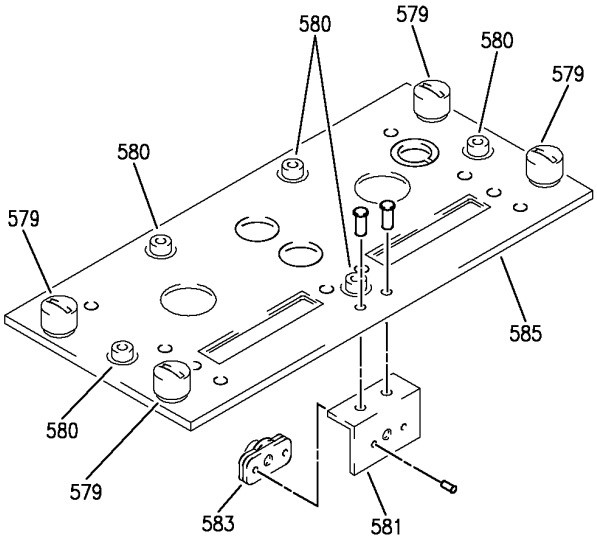

Y

Y 31113625 SHT 15 REV 256

PANEL INSTL-P8 ELECTRONICS (CONTROL STAND AFT ELECTRONIC PANEL ONLY)
FIGURE 25 (SHEET 15)

BOEING PROPRIETARY - Copyright © - Unpublished Work - See title page for details.

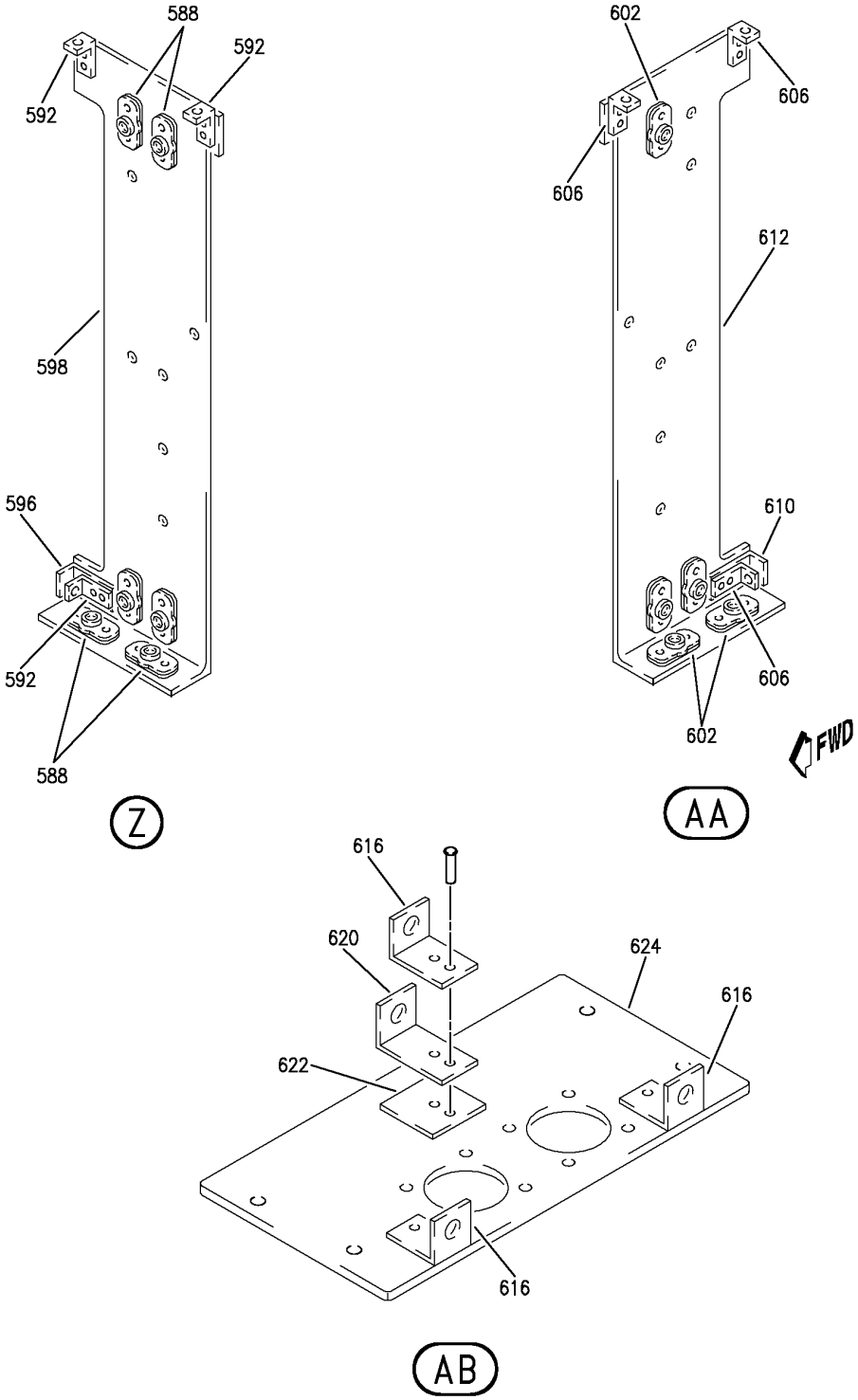

Y 31113625 SHT 16 REV 256

PANEL INSTL-P8 ELECTRONICS (CONTROL STAND AFT ELECTRONIC PANEL ONLY)
FIGURE 25 (SHEET 16)

BOEING PROPRIETARY - Copyright © - Unpublished Work - See title page for details.

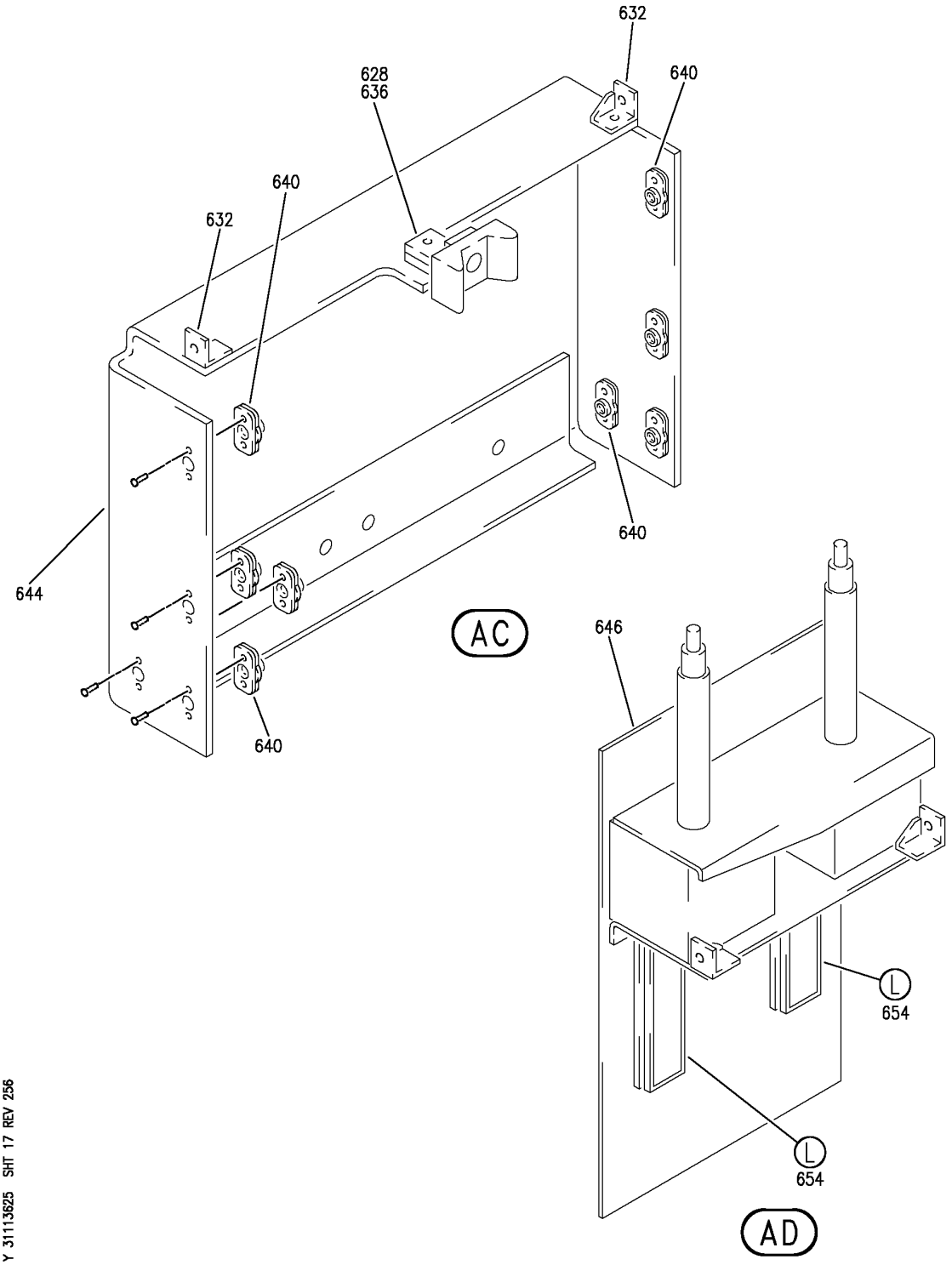

PANEL INSTL-P8 ELECTRONICS (CONTROL STAND AFT ELECTRONIC PANEL ONLY)
FIGURE 25 (SHEET 17)

BOEING PROPRIETARY - Copyright © - Unpublished Work - See title page for details.

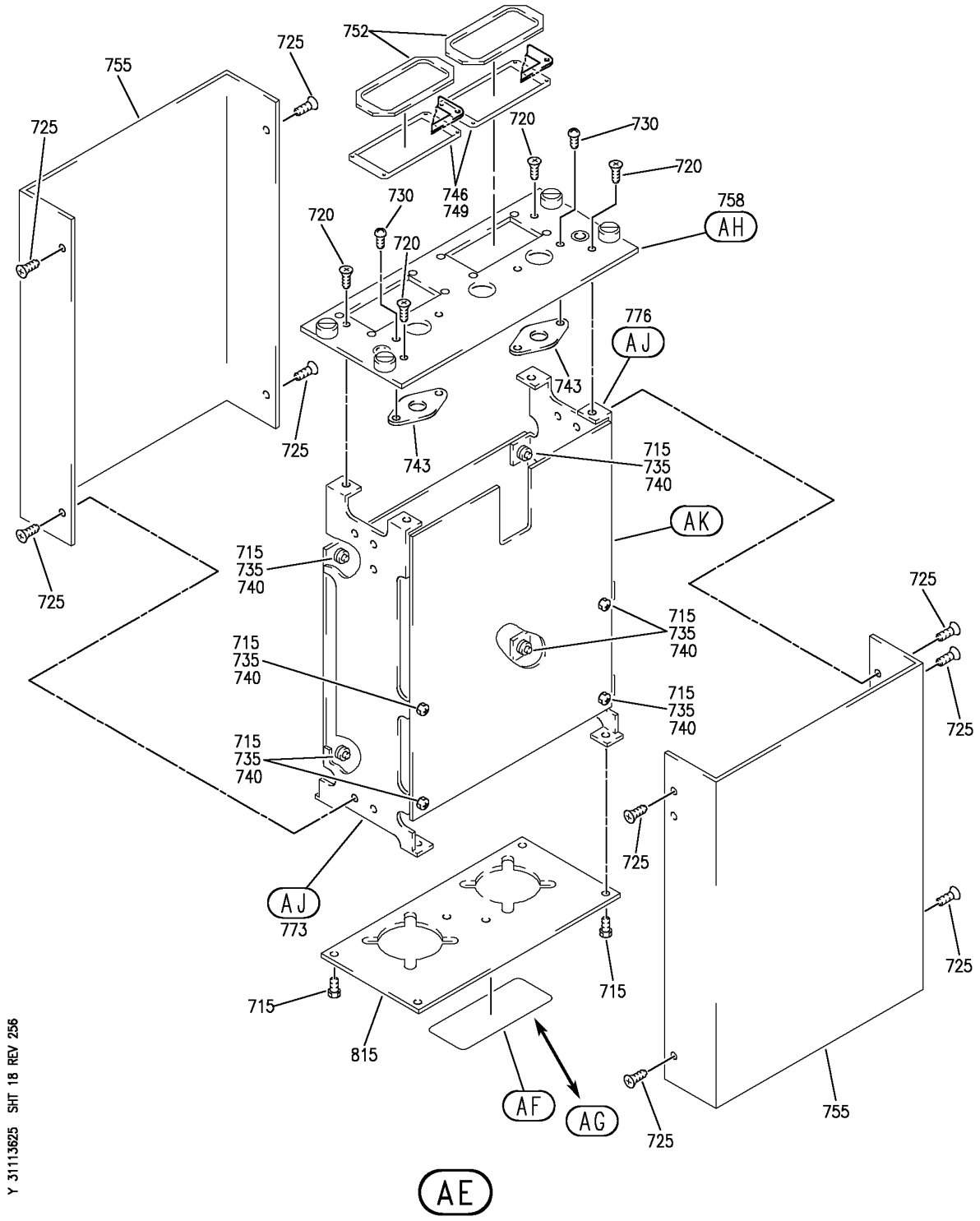

PANEL INSTL-P8 ELECTRONICS (CONTROL STAND AFT ELECTRONIC PANEL ONLY)
FIGURE 25 (SHEET 18)

BOEING PROPRIETARY - Copyright © - Unpublished Work - See title page for details.

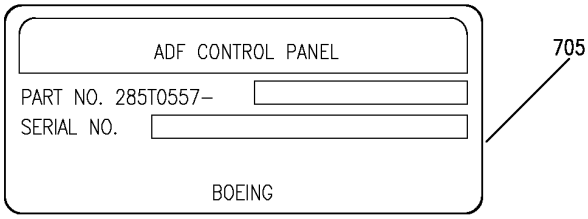

AF

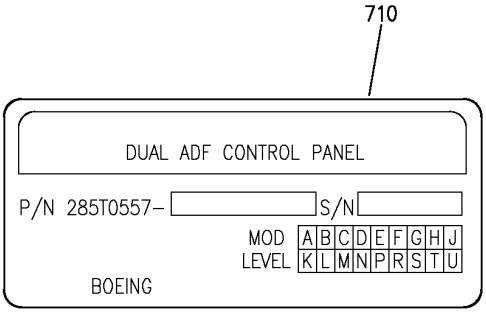

AG

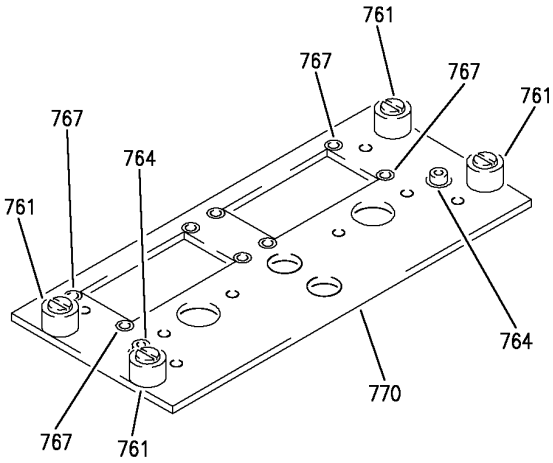

AH

Y 31113625 SHT 19 REV 256

PANEL INSTL-P8 ELECTRONICS (CONTROL STAND AFT ELECTRONIC PANEL ONLY)
FIGURE 25 (SHEET 19)

BOEING PROPRIETARY - Copyright © - Unpublished Work - See title page for details.

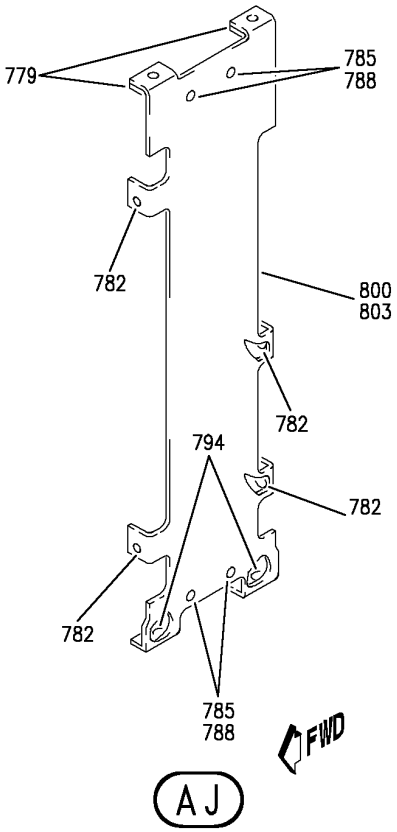

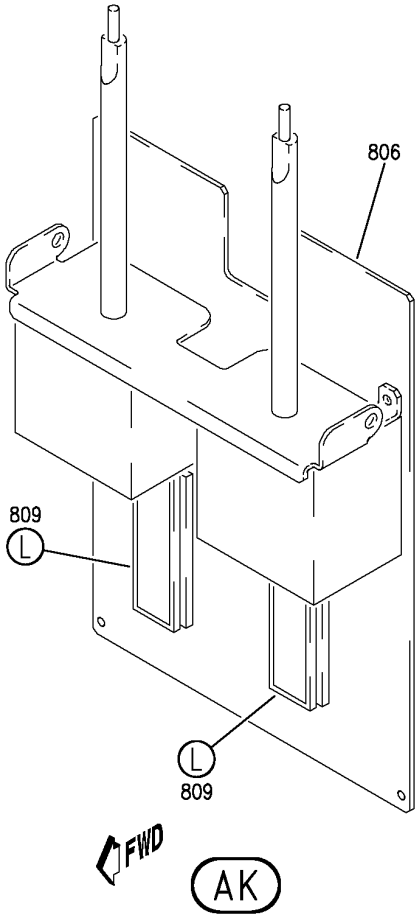

Y 31113625 SHT 20 REV 256

PANEL INSTL-P8 ELECTRONICS (CONTROL STAND AFT ELECTRONIC PANEL ONLY)
FIGURE 25 (SHEET 20)

BOEING PROPRIETARY - Copyright © - Unpublished Work - See title page for details.

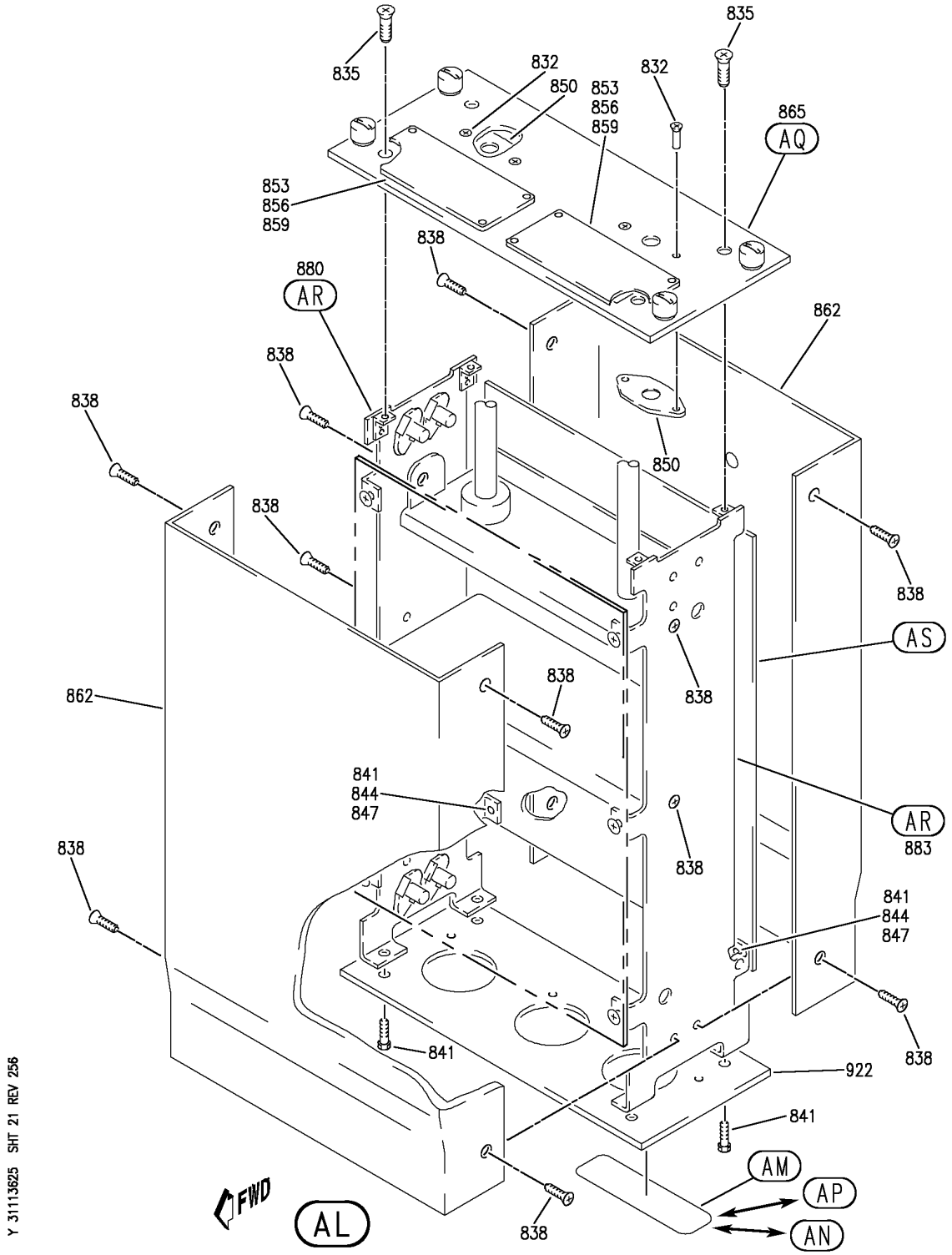

PANEL INSTL-P8 ELECTRONICS (CONTROL STAND AFT ELECTRONIC PANEL ONLY)
FIGURE 25 (SHEET 21)

BOEING PROPRIETARY - Copyright © - Unpublished Work - See title page for details.

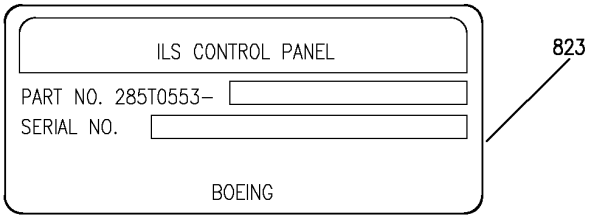

AM

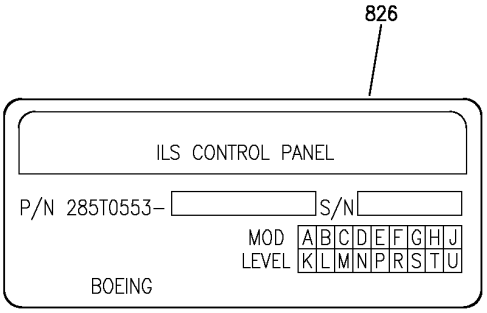

AN

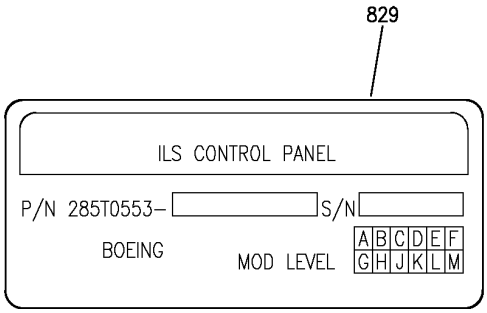

AP

Y 31113625 SHT 22 REV 256

PANEL INSTL-P8 ELECTRONICS (CONTROL STAND AFT ELECTRONIC PANEL ONLY)
FIGURE 25 (SHEET 22)

BOEING PROPRIETARY - Copyright © - Unpublished Work - See title page for details.

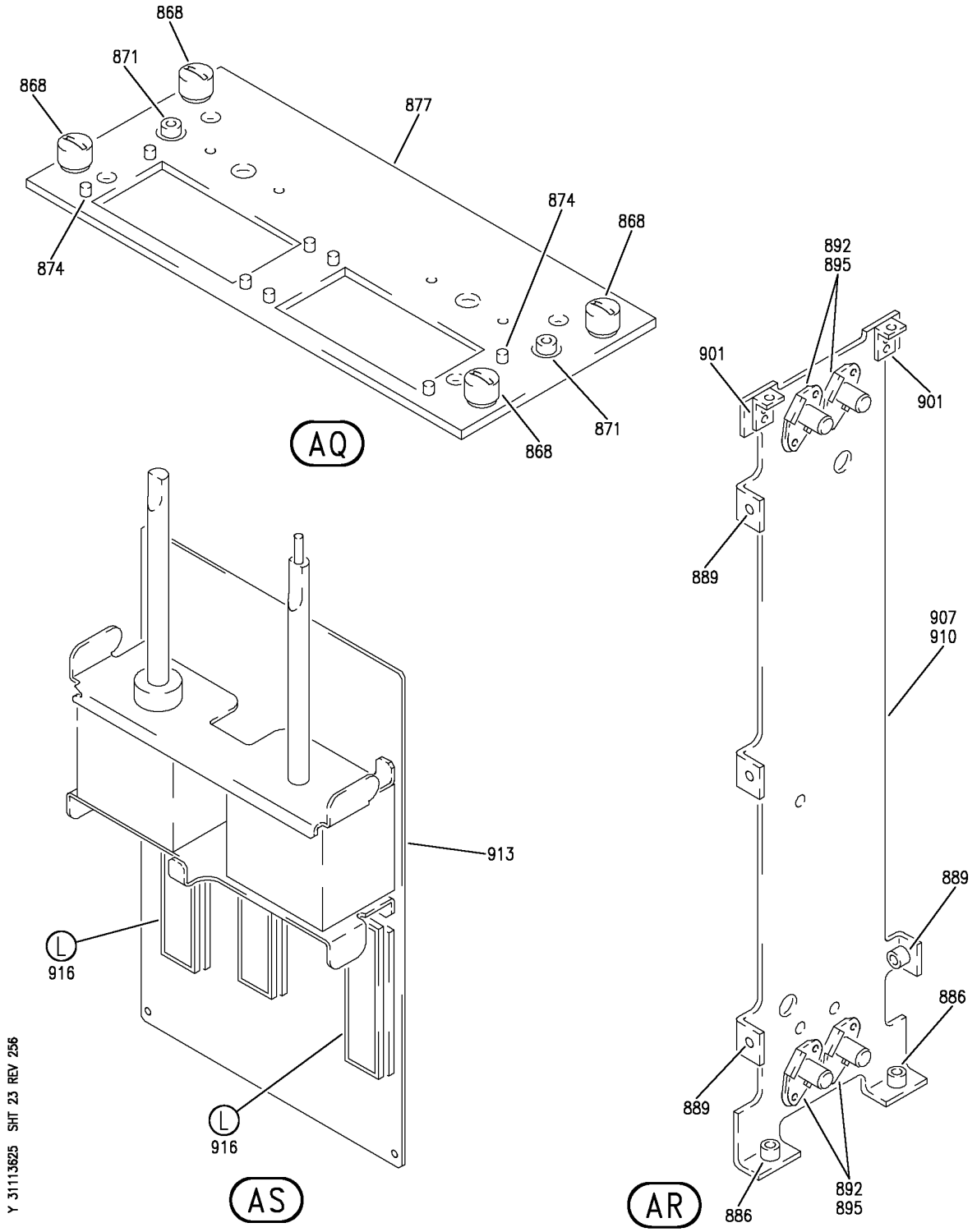

PANEL INSTL-P8 ELECTRONICS (CONTROL STAND AFT ELECTRONIC PANEL ONLY)
FIGURE 25 (SHEET 23)

BOEING PROPRIETARY - Copyright © - Unpublished Work - See title page for details.

FIG ITEM	PART NUMBER	1 2 3 4 5 6 7 NOMENCLATURE	EFFECT FROM TO	UNITS PER ASSY
25				
		PANEL INSTL-P8 ELECTRONICS (CONTROL STAND AFT ELECTRONIC PANEL ONLY)	952999	
- 1	233N6101-1	PANEL INSTL-P8 ELECTRONICS (CONTROL STAND AFT ELECTRONIC PANEL ONLY) VARIABLE DRAWING REF: 233N6101-5041 FOR NHA/OTHER SYS DET SEE: 25-10-00-05A	952999	RF
5	2041223-0402	.PANEL-WEATHER RDR CONT (CUSTOMER FURNISHED) SUPPLIER CODE: V97896 SPECIFICATION NUMBER: S220T109-401 ELECTRICAL EQUIP NUMBER: M00075 COMPONENT MAINT MANUAL REF: 34-41-12 FOR BREAKDOWN SEE: 34-43-02-01	953999	RF
6	622-5129-108	.PANEL ASSY-WEATHER RDR CONT (CUSTOMER FURNISHED) SUPPLIER CODE: V4V792 ELECTRICAL EQUIP NUMBER: M00075 COMPONENT MAINT MANUAL REF: 34-45-40 FOR BREAKDOWN SEE: 34-43-02-01	952952	RF

MISSING ITEM NUMBERS NOT APPLICABLE

- ITEM NOT ILLUSTRATED

BOEING PROPRIETARY - Copyright © - Unpublished Work - See title page for details.

FIG ITEM	PART NUMBER	1 2 3 4 5 6 7 NOMENCLATURE	EFFECT FROM TO	UNITS PER ASSY
25				
10	G6317	.PANEL-VHF CONT (CUSTOMER FURNISHED) SUPPLIER CODE: V99837 ELECTRICAL EQUIP NUMBER: M00078 M00079 M00080 COMPONENT MAINT MANUAL REF: 23-11-07 QUALIFIED I/W DATA: 622-6831-001 IS INTERCHANGEABLE WITH G6317 AS A SET ONLY. FOR BREAKDOWN SEE: 23-12-02-01	953999	RF
12	622-6831-002	.PANEL ASSY-VHF CONT (CUSTOMER FURNISHED) SUPPLIER CODE: V4V792 ELECTRICAL EQUIP NUMBER: M00078 M00079 M00080 COMPONENT MAINT MANUAL REF: 23-12-73 FOR BREAKDOWN SEE: 23-12-02-01	952952	RF
15	285T0022-43	.PANEL ASSY-AUDIO SELECTOR SUPPLIER CODE: V89954 ELECTRICAL EQUIP NUMBER: M00070 M00071 COMPONENT MAINT MANUAL REF: 23-51-54 FOR OTHER SYS DETAILS SEE: 23-51-01-01 33-13-58-01	952952	2

MISSING ITEM NUMBERS NOT APPLICABLE

– ITEM NOT ILLUSTRATED

BOEING PROPRIETARY - Copyright © - Unpublished Work - See title page for details.

FIG ITEM	PART NUMBER	1 2 3 4 5 6 7 NOMENCLATURE	EFFECT FROM TO	UNITS PER ASSY
25				
15	285T0022-27	.PANEL ASSY-AUDIO SELECTOR SUPPLIER CODE: V89954 ELECTRICAL EQUIP NUMBER: M00070 M00071 COMPONENT MAINT MANUAL REF: 23-51-51 FOR OTHER SYS DETAILS SEE: 23-51-01-01 33-13-58-01	952952	2
15	285T0022-37	.PANEL ASSY-AUDIO SELECTOR SUPPLIER CODE: V89954 ELECTRICAL EQUIP NUMBER: M00070 M00071 COMPONENT MAINT MANUAL REF: 23-51-54 FOR OTHER SYS DETAILS SEE: 23-51-01-01 33-13-58-01	952952	2
15	285T0022-41	.PANEL ASSY-AUDIO SELECTOR SUPPLIER CODE: V89954 ELECTRICAL EQUIP NUMBER: M00070 M00071 COMPONENT MAINT MANUAL REF: 23-51-54 FOR OTHER SYS DETAILS SEE: 23-51-01-01 33-13-58-01	953999	2
15	285T0022-31	.PANEL ASSY-AUDIO SELECTOR SUPPLIER CODE: V89954 ELECTRICAL EQUIP NUMBER: M00070 M00071 COMPONENT MAINT MANUAL REF: 23-51-54 FOR OTHER SYS DETAILS SEE: 23-51-01-01 33-13-58-01	953999	2

MISSING ITEM NUMBERS NOT APPLICABLE

– ITEM NOT ILLUSTRATED

BOEING PROPRIETARY - Copyright © - Unpublished Work - See title page for details.

FIG ITEM	PART NUMBER	1 2 3 4 5 6 7 NOMENCLATURE	EFFECT FROM TO	UNITS PER ASSY
25				
16	BAC27TEX1992	..MARKER-ALUMINUM FOIL QUALIFIED OPTIONAL DATA: BAC27TEX1992 OPT TO BAC27TEX4053 WHEN USED WITH ASSOCIATED PARTS USED ON: 285T0022-43 285T0022-41 285T0022-37	952999	1
16	BAC27TEX1992	..MARKER-ALUMINUM FOIL USED ON: 285T0022-31 285T0022-27	952999	1
18	BAC27TEX4053	..MARKER-ALUMINUM FOIL SUPPLIER CODE: V89954 QUALIFIED OPTIONAL DATA: BAC27TEX1992 OPT TO BAC27TEX4053 WHEN USED WITH ASSOCIATED PARTS USED ON: 285T0022-43 285T0022-41 285T0022-37	952999	1
20	NAS514P440-5	..SCREW	952999	12
22	NAS514P440-4	..SCREW	952999	4
25	NAS514P632-5	..SCREW	952999	4
26	BACG20ZA350	..GROMMET- OPTIONAL PART: BACG20ZA000350 USED ON: 285T0022-43 285T0022-41	952999	2
26	BACG20ZA350	..GROMMET- USED ON: 285T0022-37 285T0022-31 285T0022-27	952999	2
26	BACG20ZA000350	..GROMMET- OPTIONAL PART: BACG20ZA350 USED ON: 285T0022-43 285T0022-41	952999	2
28	285T0179-43	..PANEL ASSY-FRONT SUPPLIER CODE: V89954	952999	1

MISSING ITEM NUMBERS NOT APPLICABLE

– ITEM NOT ILLUSTRATED

BOEING PROPRIETARY - Copyright © - Unpublished Work - See title page for details.

FIG ITEM	PART NUMBER	1 2 3 4 5 6 7 NOMENCLATURE	EFFECT FROM TO	UNITS PER ASSY
25				
29	D1400-6A1	...STUD ASSY SUPPLIER CODE: V08524 SPECIFICATION NUMBER: BACS21DD1	952999	4
30	SF6G6CBB5D	...NUT SUPPLIER CODE: V12324 SPECIFICATION NUMBER: BACN10PA06-6	952999	3
31	F19716-06	...NUT-ANCHOR SUPPLIER CODE: V15653 ATTACHING PARTS	952999	4
- 32	BACR15BA2AD	...RIVET- SIZE DETERMINED ON INSTL. -------*-------	952999	8
33	285T0179-45	...SPACER- SUPPLIER CODE: V89954	952999	4
34	285T0179-44	...PANEL- SUPPLIER CODE: V89954	952999	1
36	285T0179-47	..PANEL- SUPPLIER CODE: V89954	952999	2
38	285T0179-48	..CHASSIS ASSY- SUPPLIER CODE: V89954	952999	1
40	F22A27M22-40	...NUT-ANCHOR SUPPLIER CODE: V0217B OPTIONAL PART: A27M88-04 V62554	952999	12
40	A27M88-04	...NUT-ANCHOR SUPPLIER CODE: V62554 OPTIONAL PART: F22A27M22-40 V0217B ATTACHING PARTS	952999	12
- 42	BACR15BA2AD	...RIVET- SIZE DETERMINED ON INSTL. -------*-------	952999	24
44	285T0179-24	...CHASSIS- SUPPLIER CODE: V89954	952999	1

MISSING ITEM NUMBERS NOT APPLICABLE

- ITEM NOT ILLUSTRATED

BOEING PROPRIETARY - Copyright © - Unpublished Work - See title page for details.

FIG ITEM	PART NUMBER	1 2 3 4 5 6 7 NOMENCLATURE	EFFECT FROM TO	UNITS PER ASSY
25				
45	233N6204-15	.PANEL ASSY-FIRE/OVERHEAT TEST SUPPLIER CODE: V89954 ELECTRICAL EQUIP NUMBER: M10445 COMPONENT MAINT MANUAL REF: 26-11-52 QUALIFIED I/W DATA: 233N6204-13-14-15-17 ARE ALL INTERCHANGEABLE EXCEPT SUBJECT TO CUSTOMER PREFERENCE THE 233N6204-301 PANEL ASSY IS I/W THE 233N6204-15 PANEL ASSY T/W THE S233T100-5508 LIGHTPLATE FOR OTHER SYS DETAILS SEE: 26-11-02-02 26-12-51-01 26-17-51-03 33-13-58-01	952999	1
50	233N6204-11	..BASEPLATE ASSY- SUPPLIER CODE: V89954 ATTACHING PARTS	952999	1
- 55	NAS514P632-5	..SCREW -------*-------	952999	3
60	PFSC35-38ASEMB	...STUD ASSY- SUPPLIER CODE: V72794 SPECIFICATION NUMBER: BACS21DX1B	952999	4
65	SF6G6CBB5D	...NUT SUPPLIER CODE: V12324 SPECIFICATION NUMBER: BACN10PA06-6	952999	2
70	233N6204-12	...BASEPLATE- SUPPLIER CODE: V89954	952999	1
75	NAS1801-06-5	..SCREW- OPTIONAL PART: BACS12HN06-5	952999	3
75	BACS12HN06-5	..SCREW- OPTIONAL PART: NAS1801-06-5	952999	3

MISSING ITEM NUMBERS NOT APPLICABLE

- ITEM NOT ILLUSTRATED

BOEING PROPRIETARY - Copyright © - Unpublished Work - See title page for details.

	FIG ITEM	PART NUMBER	1 2 3 4 5 6 7 NOMENCLATURE	EFFECT FROM TO	UNITS PER ASSY
	25				
	80	MS35338-41	..WASHER-	952999	3
			OPTIONAL PART:		
			BACW10EC06S		
	80	BACW10EC06S	..WASHER-	952999	3
			OPTIONAL PART:		
			MS35338-41		
	85	233N3250-40	..BRACKET-SPRT	952999	1
	90	69B46200-14	..STANDOFF	952999	3
R	155	233N6205-12	.PANEL ASSY-ENG FIRE CONT	952999	1
R			SUPPLIER CODE:		
R			V89954		
R			ELECTRICAL EQUIP NUMBER:		
R			M10443		
R			COMPONENT MAINT MANUAL REF:		
R			26-15-41		
R			QUALIFIED I/W DATA:		
R			233N6205-12 MAY REPLACE		
R			BUT MAY NOT BE REPLACED		
R			BY 233N6205-8 OR		
R			233N6205-6 OR 233N6205-1		
R			IN ACCORDANCE WITH		
R			SERVICE BULLETIN		
R			757-26-0023 FOR 757		
R			AIRCRAFTS ONLY.		
R			FOR OTHER SYS DETAILS SEE:		
R			26-11-54-01		
R			26-21-01-01		
	160	NAS514P632-5	..SCREW	952999	3
	162	NAS1801-06-5	..SCREW	952999	3
	165	69B46200-29	..STANDOFF	952999	1
	170	233N6205-17	..STANDOFF-	952999	2
			SUPPLIER CODE:		
			V89954		
	175	233N6205-13	..BASEPLATE ASSY-	952999	1
			SUPPLIER CODE:		
			V89954		
	180	SF6GXBAS8D	...PIN-	952999	2
			SUPPLIER CODE:		
			V12324		
	182	233N3250-61	..BRACKET-SPRT	952999	1
	185	233N6205-16	..BRACKET ASSY-	952999	1
			SUPPLIER CODE:		
			V89954		
			ATTACHING PARTS		
-	190	NAS1801-04-4	..SCREW	952999	6
			-------*-------		
	195	BACG20ZA0208	...GROMMET	952999	2

MISSING ITEM NUMBERS NOT APPLICABLE

- ITEM NOT ILLUSTRATED

BOEING PROPRIETARY - Copyright © - Unpublished Work - See title page for details.

FIG ITEM	PART NUMBER	1 2 3 4 5 6 7 NOMENCLATURE	EFFECT FROM TO	UNITS PER ASSY
25				
205	2229346-5	.PANEL ASSY-INTERACTIVE DISPLAY UNIT/ACARS (CUSTOMER FURNISHED) SUPPLIER CODE: V98571 ELECTRICAL EQUIP NUMBER: M10893 COMPONENT MAINT MANUAL REF: 31-60-00	952999	1
206	2229919	..PLATE-IDENT SUPPLIER CODE: V98571	952999	1
207	2228514	..LABEL-STATIC SENSITIVE SUPPLIER CODE: V98571	952999	1
208	2227276	..LABEL-PROGRAM REVISION SUPPLIER CODE: V98571	952999	1
209	2230281	..LABEL-CAUTION SUPPLIER CODE: V98571	952999	1
210	2223781-30	..LABEL-PMA SUPPLIER CODE: V98571 CONFIG CHG DATA FROM A CMM: REPLD BY 2223781-65	952999	1
210	2223781-65	..LABEL-PMA SUPPLIER CODE: V98571 CONFIG CHG DATA FROM A CMM: REPLACES 2223781-30	952999	1
211	272002	..FUSE-F1 SUPPLIER CODE: V75915	952999	1
212	282008A	..FUSE-HOLDER XF1 SUPPLIER CODE: V75915	952999	1
213	622-8594-001	.PANEL ASSY-ATC CONT DUAL (CUSTOMER FURNISHED) SUPPLIER CODE: V4V792 ELECTRICAL EQUIP NUMBER: M10140 COMPONENT MAINT MANUAL REF: 34-50-76 FOR BREAKDOWN SEE: 34-53-02-01	952952	RF

MISSING ITEM NUMBERS NOT APPLICABLE

– ITEM NOT ILLUSTRATED

BOEING PROPRIETARY - Copyright © - Unpublished Work - See title page for details.

FIG ITEM	PART NUMBER	1 2 3 4 5 6 7 NOMENCLATURE	EFFECT FROM TO	UNITS PER ASSY
25				
213	622-8974-314	.PANEL ASSY-ATC CONT DUAL (CUSTOMER FURNISHED) SUPPLIER CODE: V4V792 ELECTRICAL EQUIP NUMBER: M10140 COMPONENT MAINT MANUAL REF: 34-40-78 FOR BREAKDOWN SEE: 34-53-02-01	953999	RF
215	BACP10U0037T	.PANEL ASSY	952999	2
225	285T0524-6	.PANEL ASSY-ILS CONT SUPPLIER CODE: V89954 ELECTRICAL EQUIP NUMBER: M00087 COMPONENT MAINT MANUAL REF: 34-31-52 FOR OTHER SYS DETAILS SEE: 11-31-05-44 33-13-58-01 34-31-02-01	952999	1
228	BAC27TEX2825	..MARKER-ALUMINUM FOIL SUPPLIER CODE: V89954	952999	1
230	S233-6	..SEAL- SUPPLIER CODE: V51896 OPTIONAL PART: S233-13 V51896	952999	1
230	S233-13	..SEAL- SUPPLIER CODE: V51896 OPTIONAL PART: S233-6 V51896	952999	1
232	NAS1801-04-5	..SCREW	952999	2
235	NAS514P440-6P	..SCREW	952999	4
236	AN960-4L	..WASHER	952999	2
238	92-1660-40	..NUT SUPPLIER CODE: V72962 SPECIFICATION NUMBER: BACN10DN40 OPTIONAL PART: 92-1660-440 V15653	952999	2

MISSING ITEM NUMBERS NOT APPLICABLE

– ITEM NOT ILLUSTRATED

BOEING PROPRIETARY - Copyright © - Unpublished Work - See title page for details.

FIG ITEM	PART NUMBER	1 2 3 4 5 6 7 NOMENCLATURE	EFFECT FROM TO	UNITS PER ASSY
25				
240	WCS225-7	..SEAL ASSY-SHAFT SUPPLIER CODE: V51074 ATTACHING PARTS	952999	2
- 242	MS35206-202	..SCREW -------*-------	952999	4
244	285T0525-3	..MODULE ASSY-ELECT. SUPPLIER CODE: V89954	952999	1
- 245	285T0525-4	...MODULE ASSY- SUPPLIER CODE: V89954	952999	1
246	285T0250-4	....PMD ASSY- SUPPLIER CODE: V89954	952999	3
247	BAC27TEX2007	.....DECAL- OPTIONAL PART: WHB673-1D0X0D5 V85480	952999	1
247	WHB673-1D0X0D5	.....DECAL- SUPPLIER CODE: V85480 OPTIONAL PART: BAC27TEX2007	952999	1
248	285T0530-1	..ENCLOSURE ASSY- SUPPLIER CODE: V89954 OPTIONAL PART: 285T0530-2 V89954	952999	1
248	285T0530-2	..ENCLOSURE ASSY- SUPPLIER CODE: V89954 OPTIONAL PART: 285T0530-1 V89954	952999	1
250	NAS1801-04-5	...SCREW	952999	4
252	NAS514P440-4P	...SCREW	952999	4
254	NAS514P440-5P	...SCREW	952999	12
256	AN960D4	...WASHER	952999	4
258	285T0529-1	...COVER ASSY-SHELL SUPPLIER CODE: V89954	952999	2
260	285T0528-1	...PANEL ASSY-FRONT SUPPLIER CODE: V89954 USED ON: 285T0530-1	952999	1

MISSING ITEM NUMBERS NOT APPLICABLE

- ITEM NOT ILLUSTRATED

BOEING PROPRIETARY - Copyright © - Unpublished Work - See title page for details.

FIG ITEM	PART NUMBER	1 2 3 4 5 6 7 NOMENCLATURE	EFFECT FROM TO	UNITS PER ASSY
25				
260	285T0528-3	...PANEL ASSY-FRONT SUPPLIER CODE: V89954 USED ON: 285T0530-2	952999	1
262	BACS21DD1B	....STUD ASSY SUPPLIER CODE: V08524 SPECIFICATION NUMBER: BACS21DD1B	952999	4
264	SF6G6CBB5D	....NUT SUPPLIER CODE: V12324 SPECIFICATION NUMBER: BACN10PA06-6	952999	4
266	285T0528-2	....PANEL- SUPPLIER CODE: V89954 USED ON: 285T0528-1	952999	1
266	285T0528-4	....PANEL- SUPPLIER CODE: V89954 USED ON: 285T0528-3	952999	1
268	285T0529-3	...PANEL ASSY-SIDE SUPPLIER CODE: V89954	952999	1
270	285T0529-4	...PANEL ASSY-SIDE SUPPLIER CODE: V89954	952999	1
272	RMF9201M40	....NUTPLATE SUPPLIER CODE: V72962 SPECIFICATION NUMBER: BACN10JN04 OPTIONAL PART: BRFM20A04L V52828 MF1000-04BAC V15653 NS103218-40 V80539 MF53049-04 V15653 T8124S04S V11815 VN252A40L V92215	952999	4

MISSING ITEM NUMBERS NOT APPLICABLE

– ITEM NOT ILLUSTRATED

BOEING PROPRIETARY - Copyright © - Unpublished Work - See title page for details.

FIG ITEM	PART NUMBER	1 2 3 4 5 6 7 NOMENCLATURE	EFFECT FROM TO	UNITS PER ASSY
25				
		ATTACHING PARTS		
- 274	BACR15BA3AD	....RIVET-	952999	8
		SIZE DETERMINED ON INSTL.		
		-------*-------		
276	F22A27M22-40	....NUT-ANCHOR	952999	4
		SUPPLIER CODE:		
		V0217B		
		ATTACHING PARTS		
- 278	BACR15BA2AD	....RIVET-	952999	8
		SIZE DETERMINED ON INSTL.		
		-------*-------		
280	285T0529-5	....PANEL-	952999	1
		SUPPLIER CODE:		
		V89954		
		USED ON:		
		285T0529-3		
282	285T0529-6	....PANEL-	952999	1
		SUPPLIER CODE:		
		V89954		
		USED ON:		
		285T0529-4		
284	285T0527-1	...PANEL-REAR	952999	1
		SUPPLIER CODE:		
		V89954		
285	285T0020-8	.PANEL ASSY-ILS CONT	952999	1
		SUPPLIER CODE:		
		V89954		
		ELECTRICAL EQUIP NUMBER:		
		M00087		
		COMPONENT MAINT MANUAL REF:		
		34-31-51		
		FOR OTHER SYS DETAILS SEE:		
		11-31-05-44		
		33-13-58-01		
		34-31-02-01		
286	BAC27TEX0934	..MARKER-ALUMINUM FOIL	952999	1
		SUPPLIER CODE:		
		V89954		
288	S233-2	..SEAL-	952999	1
		SUPPLIER CODE:		
		V51896		
		OPTIONAL PART:		
		S233-9		
		V51896		

MISSING ITEM NUMBERS NOT APPLICABLE

- ITEM NOT ILLUSTRATED

BOEING PROPRIETARY - Copyright © - Unpublished Work - See title page for details.

FIG ITEM	PART NUMBER	1 2 3 4 5 6 7 NOMENCLATURE	EFFECT FROM TO	UNITS PER ASSY
25				
288	S233-9	..SEAL-	952999	1
		SUPPLIER CODE:		
		V51896		
		OPTIONAL PART:		
		S233-2		
		V51896		
289	NAS514P440-4P	..SCREW	952999	10
290	NAS514P440-5P	..SCREW	952999	6
292	285T0082-10	..MODULE ASSY-FRONT	952999	1
		SUPPLIER CODE:		
		V89954		
		OPTIONAL PART:		
		285T0082-14		
		V89954		
292	285T0082-14	..MODULE ASSY-FRONT	952999	1
		SUPPLIER CODE:		
		V89954		
		OPTIONAL PART:		
		285T0082-10		
		V89954		
293	MS35206-202	...SCREW	952999	4
294	WCS225-3	...SEAL ASSY-	952999	2
		SUPPLIER CODE:		
		V51074		
		OPTIONAL PART:		
		WCS225-7		
		V51074		
294	WCS225-7	...SEAL ASSY-	952999	2
		SUPPLIER CODE:		
		V51074		
		OPTIONAL PART:		
		WCS225-3		
		V51074		
296	285T0440-1	...PANEL ASSY-	952999	1
		SUPPLIER CODE:		
		V89954		
		USED ON:		
		285T0082-10		
296	285T0440-22	...PANEL ASSY-	952999	1
		SUPPLIER CODE:		
		V89954		
		USED ON:		
		285T0082-14		
297	NAS514P440-5P	....SCREW	952999	2
298	BACS21DD1B	....STUD ASSY	952999	4
		SUPPLIER CODE:		
		V08524		
		SPECIFICATION NUMBER:		
		BACS21DD1B		

MISSING ITEM NUMBERS NOT APPLICABLE

– ITEM NOT ILLUSTRATED

BOEING PROPRIETARY - Copyright © - Unpublished Work - See title page for details.

FIG ITEM	PART NUMBER	1 2 3 4 5 6 7 NOMENCLATURE	EFFECT FROM TO	UNITS PER ASSY
25				
299	SF6G6CBB5D	....NUT SUPPLIER CODE: V12324 SPECIFICATION NUMBER: BACN10PA06-6	952999	4
300	92-1660-40	....NUT SUPPLIER CODE: V72962 SPECIFICATION NUMBER: BACN10DN40 OPTIONAL PART: 92-1660-440 V15653	952999	2
301	285T0440-5	....PANEL- SUPPLIER CODE: V89954 USED ON: 285T0440-1	952999	1
301	285T0440-23	....PANEL- SUPPLIER CODE: V89954 USED ON: 285T0440-22	952999	1
302	285T0438-1	....CHASSIS ASSY-UPR SUPPLIER CODE: V89954	952999	1
303	F22A27M22-40	.....NUT-ANCHOR SUPPLIER CODE: V0217B ATTACHING PARTS	952999	2
- 304	BACR15BA2AD	.....RIVET- SIZE DETERMINED ON INSTL. -------*-------	952999	4
306	285T0439-3	..PANEL-SIDE SUPPLIER CODE: V89954	952999	1
308	285T0439-4	..PANEL-SIDE SUPPLIER CODE: V89954	952999	1
310	285T0081-10	..MODULE ASSY-REAR SUPPLIER CODE: V89954	952999	1
311	285T0250-4	...PMD ASSY- SUPPLIER CODE: V89954	952999	3
312	BAC27TEX2007	....DECAL- OPTIONAL PART: WHB673-1D0X0D5 V85480	952999	1

MISSING ITEM NUMBERS NOT APPLICABLE

- ITEM NOT ILLUSTRATED

BOEING PROPRIETARY - Copyright © - Unpublished Work - See title page for details.

FIG ITEM	PART NUMBER	1 2 3 4 5 6 7 NOMENCLATURE	EFFECT FROM TO	UNITS PER ASSY
25				
312	WHB673-1D0X0D5	....DECAL-	952999	1
		SUPPLIER CODE:		
		V85480		
		OPTIONAL PART:		
		BAC27TEX2007		
313	NAS514P440-4P	...SCREW	952999	1
314	NAS514P440-7P	...SCREW	952999	1
315	NAS43DD0-8	...SPACER	952999	1
316	8214B0440HL	...SPACER-THREADED	952999	1
		SUPPLIER CODE:		
		V06540		
317	NAS620-4L	...WASHER	952999	1
318	285T0439-1	...CHASSIS ASSY-	952999	1
		SUPPLIER CODE:		
		V89954		
319	NAS1801-04-5	....SCREW	952999	1
320	AN960D4L	....WASHER	952999	3
321	F22A27M22-40	....NUT-ANCHOR	952999	4
		SUPPLIER CODE:		
		V0217B		
		ATTACHING PARTS		
- 322	BACR15BB2AD	....RIVET-	952999	8
		SIZE DETERMINED ON INSTL.		
		-------*-------		
324	285T0439-6	....BRACKET ASSY-	952999	1
		SUPPLIER CODE:		
		V89954		
326	285T0439-2	....SUPPORT ASSY-	952999	1
		SUPPLIER CODE:		
		V89954		
		ATTACHING PARTS		
- 328	BACR15BA3AD	....RIVET-	952999	5
		SIZE DETERMINED ON INSTL.		
		-------*-------		

MISSING ITEM NUMBERS NOT APPLICABLE

- ITEM NOT ILLUSTRATED

BOEING PROPRIETARY - Copyright © - Unpublished Work - See title page for details.

FIG ITEM	PART NUMBER	1 2 3 4 5 6 7 NOMENCLATURE	EFFECT FROM TO	UNITS PER ASSY
25				
330	RMF9201M40	.....NUTPLATE SUPPLIER CODE: V72962 SPECIFICATION NUMBER: BACN10JN04 OPTIONAL PART: BRFM20A04L V52828 MF1000-04BAC V15653 NS103218-40 V80539 MF53049-04 V15653 T8124S04S V11815 VN252A40L V92215	952999	3
332	T8077S440	.....NUTPLATE SUPPLIER CODE: V11815 SPECIFICATION NUMBER: BACN10JP04B OPTIONAL PART: MK2000-04BAC V15653 NS103198-40 V80539 RMA9207M40 V72962 VN201A1-40L V92215 BRM100A04L V52828 ATTACHING PARTS	952999	1
- 334	BACR15BA3AD	.....RIVET- SIZE DETERMINED ON INSTL. -------*-------	952999	8
336	285T0439-17	.....SUPPORT- SUPPLIER CODE: V89954	952999	1
338	285T0439-5	....CHASSIS- SUPPLIER CODE: V89954	952999	1

MISSING ITEM NUMBERS NOT APPLICABLE

- ITEM NOT ILLUSTRATED

BOEING PROPRIETARY - Copyright © - Unpublished Work - See title page for details.

FIG ITEM	PART NUMBER	1 2 3 4 5 6 7 NOMENCLATURE	EFFECT FROM TO	UNITS PER ASSY
25				
340	233T6201-21	.PANEL ASSY-AIL. RUD TRIM CONT SUPPLIER CODE: V89954 ELECTRICAL EQUIP NUMBER: M00074 COMPONENT MAINT MANUAL REF: 27-21-63 QUALIFIED I/W DATA: THE 233T6201-324 PANEL ASSY IS I/W THE 233T6201-21 PANEL ASSY T/W THE S233T100-528 LIGHTPLATE AND SA808-101 KNOB 233T6201-19 I/W 233T6201-21 EXCEPT FOR ETOPS WHERE 233T6201-21 INSTALLED FOR OTHER SYS DETAILS SEE: 27-11-23-01 27-21-23-01 33-13-58-01	952999	1
340	233T6201-22	.PANEL ASSY-AIL. RUD TRIM CONT SUPPLIER CODE: V89954 ELECTRICAL EQUIP NUMBER: M00074 FOR OTHER SYS DETAILS SEE: 27-11-23-01 27-21-23-01 33-13-58-01	952999	1
345	233T6200-38	..BRACKET-SPRT ATTACHING PARTS	952999	1
- 350	NAS1801-06-5	..SCREW	952999	3
- 355	MS35338-41	..WASHER -------*-------	952999	3
360	NAS514P632-5	..SCREW	952999	7
365	69B46200-7	..STANDOFF	952999	3
370	233T6201-20	..SHROUD ASSY- SUPPLIER CODE: V89954	952999	1
372	MF6001-06	...NUTPLATE SUPPLIER CODE: V15653 SPECIFICATION NUMBER: BACN10KJ06CM	952999	4

MISSING ITEM NUMBERS NOT APPLICABLE

– ITEM NOT ILLUSTRATED

BOEING PROPRIETARY - Copyright © - Unpublished Work - See title page for details.

FIG ITEM	PART NUMBER	1 2 3 4 5 6 7 NOMENCLATURE	EFFECT FROM TO	UNITS PER ASSY
25				
		ATTACHING PARTS		
- 374	BACR15BA3AD	...RIVET-	952999	8
		SIZE DETERMINED ON INSTL.		
		-------*-------		
375	233T6201-15	..BASEPLATE ASSY-	952999	1
		SUPPLIER CODE:		
		V89954		
378	BACS21DD1B	...STUD ASSY	952999	4
380	SF6G6CBB5D	...NUT	952999	3
		SUPPLIER CODE:		
		V12324		
		SPECIFICATION NUMBER:		
		BACN10PA06-6		
382	233T6201-16	...BASEPLATE-	952999	1
		SUPPLIER CODE:		
		V89954		
435	362-021-002	.INDICATOR ASSY-RUD	952999	RF
		TRIM		
		SUPPLIER CODE:		
		V26055		
		FUNCTIONAL DESCRIPTION:		
		DISPLAYS RUDDER TRIM		
		POSITION AS NOSE LEFT		
		AND RIGHT UNITS		
		SPECIFICATION NUMBER:		
		S231T282-2		
		ELECTRICAL EQUIP NUMBER:		
		N00083		
		COMPONENT MAINT MANUAL REF:		
		27-20-01		
		FOR BREAKDOWN SEE:		
		27-28-02-01		

MISSING ITEM NUMBERS NOT APPLICABLE

- ITEM NOT ILLUSTRATED

BOEING PROPRIETARY - Copyright © - Unpublished Work - See title page for details.

FIG ITEM	PART NUMBER	1 2 3 4 5 6 7 NOMENCLATURE	EFFECT FROM TO	UNITS PER ASSY
25				
440	233N6203-103	.PANEL ASSY-APU/CARGO FIRE CONT SUPPLIER CODE: V89954 ELECTRICAL EQUIP NUMBER: M10444 COMPONENT MAINT MANUAL REF: 26-15-51 QUALIFIED I/W DATA: 233N6203-9-23-45-103-104 -105 ARE ALL I/W EXCEPT SUBJECT TO CUSTOMER PREFERENCE PRE ALERT SB: 33A0044 FOR OTHER SYS DETAILS SEE: 26-22-03-02 26-23-52-02 33-13-58-01	952999	1
440	233N6203-1103	.PANEL ASSY-APU/CARGO FIRE CONT SUPPLIER CODE: V89954 ELECTRICAL EQUIP NUMBER: M10444 COMPONENT MAINT MANUAL REF: 26-15-51 POST ALERT SB: 33A0044 FOR OTHER SYS DETAILS SEE: 26-22-03-02 26-23-52-02 33-13-58-01	952999	1

MISSING ITEM NUMBERS NOT APPLICABLE

– ITEM NOT ILLUSTRATED

BOEING PROPRIETARY - Copyright © - Unpublished Work - See title page for details.

FIG ITEM	PART NUMBER	1 2 3 4 5 6 7 NOMENCLATURE	EFFECT FROM TO	UNITS PER ASSY
25				
445	233N6203-161	.PANEL ASSY-APU/CARGO FIRE CONT SUPPLIER CODE: V89954 ELECTRICAL EQUIP NUMBER: M10444 COMPONENT MAINT MANUAL REF: 26-15-51 QUALIFIED I/W DATA: THE 233N6203-301 PANEL ASSY IS I/W THE 233N6203-161 PANEL ASSY T/W THE S233T100-573 LIGHTPLATE 233N6203-9/-23/-45/-104/-105/-161 ARE ALL INTERCHANGEABLE EXCEPT SUBJECT TO CUSTOMER PREFERENCE PRE ALERT SB: 33A0044 FOR OTHER SYS DETAILS SEE: 26-22-03-02 26-23-52-02 33-13-58-01	952999	1
445	233N6203-1161	.PANEL ASSY-APU/CARGO FIRE CONT SUPPLIER CODE: V89954 ELECTRICAL EQUIP NUMBER: M10444 COMPONENT MAINT MANUAL REF: 26-15-51 POST ALERT SB: 33A0044 FOR OTHER SYS DETAILS SEE: 26-22-03-02 26-23-52-02 33-13-58-01	952999	1
448	NAS1801-06-5	..SCREW	952999	4
452	MS35338-41	..WASHER	952999	4
455	233N6203-2	..BASEPLATE ASSY- SUPPLIER CODE: V89954 ATTACHING PARTS	952999	1
- 460	NAS514P632-5	..SCREW -------*-------	952999	4

MISSING ITEM NUMBERS NOT APPLICABLE

- ITEM NOT ILLUSTRATED

BOEING PROPRIETARY - Copyright © - Unpublished Work - See title page for details.

FIG ITEM	PART NUMBER	1 2 3 4 5 6 7 NOMENCLATURE	EFFECT FROM TO	UNITS PER ASSY
25				
465	SF6G6CBB5D	...NUT SUPPLIER CODE: V12324 SPECIFICATION NUMBER: BACN10PA06-6	952999	3
470	PFSC35-38ASEMB	...STUD ASSY SUPPLIER CODE: V72794 SPECIFICATION NUMBER: BACS21DX1B	952999	4
475	233N6203-3	...BASEPLATE- SUPPLIER CODE: V89954	952999	1
480	69B46200-15	..STANDOFF	952999	4
482	233N6203-6	..BRACKET ASSY- SUPPLIER CODE: V89954	952999	RF
530	2228472-4	.PRINTER-ACARS (CUSTOMER FURNISHED) SUPPLIER CODE: V98571 ELECTRICAL EQUIP NUMBER: M10386	952999	1
535	622-6830-001	.PANEL ASSY-ADF CONT DUAL (CUSTOMER FURNISHED) SUPPLIER CODE: V4V792 ELECTRICAL EQUIP NUMBER: M01046 COMPONENT MAINT MANUAL REF: 34-53-76 FOR BREAKDOWN SEE: 34-57-02-02	952952	RF
540	285T0537-1	.PANEL ASSY-ADF CONT SUPPLIER CODE: V89954 ELECTRICAL EQUIP NUMBER: M01046 COMPONENT MAINT MANUAL REF: 34-57-53 FOR OTHER SYS DETAILS SEE: 11-31-05-44 33-13-58-01 34-57-02-02	953999	RF
542	BAC27TEX3153	..MARKER- SUPPLIER CODE: V89954	953999	1

MISSING ITEM NUMBERS NOT APPLICABLE

– ITEM NOT ILLUSTRATED

BOEING PROPRIETARY - Copyright © - Unpublished Work - See title page for details.

FIG ITEM	PART NUMBER	1 2 3 4 5 6 7 NOMENCLATURE	EFFECT FROM TO	UNITS PER ASSY
25				
545	S233-7	..SEAL- SUPPLIER CODE: V51896 OPTIONAL PART: S233-14 V51896	953999	1
545	S233-14	..SEAL- SUPPLIER CODE: V51896 OPTIONAL PART: S233-7 V51896	953999	1
548	NAS514P440-6P	..SCREW	953999	4
552	NAS1801-04-6	..SCREW	953999	3
556	AN960-4L	..WASHER	953999	3
560	WCS225-5	..SEAL ASSY- SUPPLIER CODE: V51074 ATTACHING PARTS	953999	2
- 565	MS35206-202	..SCREW -------*-------	953999	4
568	285T0450-2	..ENCLOSURE ASSY- SUPPLIER CODE: V89954 OPTIONAL PART: 285T0450-4 V89954	953999	1
568	285T0450-4	..ENCLOSURE ASSY- SUPPLIER CODE: V89954 OPTIONAL PART: 285T0450-2 V89954	953999	1
570	NAS1801-04-5	...SCREW	953999	4
571	NAS514P440-5P	...SCREW	953999	22
572	NAS514P440-7P	...SCREW	953999	1
574	285T0449-1	...COVER-UPR SUPPLIER CODE: V89954	953999	1
576	285T0449-9	...COVER ASSY-LWR SUPPLIER CODE: V89954	953999	1
578	285T0448-9	...PANEL ASSY-FRONT SUPPLIER CODE: V89954 USED ON: 285T0450-4	953999	1

MISSING ITEM NUMBERS NOT APPLICABLE

- ITEM NOT ILLUSTRATED

BOEING PROPRIETARY - Copyright © - Unpublished Work - See title page for details.

FIG ITEM	PART NUMBER	1 2 3 4 5 6 7 NOMENCLATURE	EFFECT FROM TO	UNITS PER ASSY
25				
578	285T0448-4	...PANEL ASSY-FRONT SUPPLIER CODE: V89954 USED ON: 285T0450-2	953999	1
579	BACS21DD1B	....STUD ASSY SUPPLIER CODE: V08524 SPECIFICATION NUMBER: BACS21DD1B	953999	4
580	SF6G6CBB5D	....NUT SUPPLIER CODE: V12324 SPECIFICATION NUMBER: BACN10PA06-6	953999	5
581	285T0451-1	....CLIP- SUPPLIER CODE: V89954 ATTACHING PARTS	953999	1
- 582	BACR15BA2AD	....RIVET- SIZE DETERMINED ON INSTL. -------*-------	953999	2
583	RMF9201M40	....NUTPLATE SUPPLIER CODE: V72962 SPECIFICATION NUMBER: BACN10JN04 OPTIONAL PART: BRFM20A04L V52828 MF1000-04BAC V15653 NS103218-40 V80539 MF53049-04 V15653 T8124S04S V11815 VN252A40L V92215 ATTACHING PARTS	953999	1
- 584	BACR15BA3AD	....RIVET- SIZE DETERMINED ON INSTL. -------*-------	953999	2
585	285T0448-10	....PANEL- SUPPLIER CODE: V89954 USED ON: 285T0448-9	953999	1

MISSING ITEM NUMBERS NOT APPLICABLE

- ITEM NOT ILLUSTRATED

BOEING PROPRIETARY - Copyright © - Unpublished Work - See title page for details.

FIG ITEM	PART NUMBER	1 2 3 4 5 6 7 NOMENCLATURE	EFFECT FROM TO	UNITS PER ASSY
25				
585	285T0448-5	....PANEL- SUPPLIER CODE: V89954 USED ON: 285T0448-4	953999	1
586	285T0449-4	...PANEL ASSY-SIDE SUPPLIER CODE: V89954	953999	1
588	RMF9201M40	....NUTPLATE SUPPLIER CODE: V72962 SPECIFICATION NUMBER: BACN10JN04 OPTIONAL PART: BRFM20A04L V52828 MF1000-04BAC V15653 NS103218-40 V80539 MF53049-04 V15653 T8124S04S V11815 VN252A40L V92215 ATTACHING PARTS	953999	6
- 590	BACR15BA3AD	....RIVET- SIZE DETERMINED ON INSTL. -------*-------	953999	12
592	F22A27M22-40	....NUT-ANCHOR SUPPLIER CODE: V0217B ATTACHING PARTS	953999	3
- 594	BACR15BA2AD	....RIVET- SIZE DETERMINED ON INSTL. -------*-------	953999	6
596	285T0447-5	....CLIP- SUPPLIER CODE: V89954	953999	1
598	285T0449-8	....PANEL- SUPPLIER CODE: V89954	953999	1
600	285T0449-11	...PANEL ASSY-SIDE SUPPLIER CODE: V89954	953999	1

MISSING ITEM NUMBERS NOT APPLICABLE

- ITEM NOT ILLUSTRATED

BOEING PROPRIETARY - Copyright © - Unpublished Work - See title page for details.

FIG ITEM	PART NUMBER	1 2 3 4 5 6 7 NOMENCLATURE	EFFECT FROM TO	UNITS PER ASSY
25				
602	RMF9201M40	....NUTPLATE SUPPLIER CODE: V72962 SPECIFICATION NUMBER: BACN10JN04 OPTIONAL PART: BRFM20A04L V52828 MF1000-04BAC V15653 NS103218-40 V80539 MF53049-04 V15653 T8124S04S V11815 VN252A40L V92215 ATTACHING PARTS	953999	5
- 604	BACR15BA3AD	....RIVET- SIZE DETERMINED ON INSTL. -------*-------	953999	10
606	F22A27M22-40	....NUT-ANCHOR SUPPLIER CODE: V0217B ATTACHING PARTS	953999	3
- 608	BACR15BA2AD	....RIVET- SIZE DETERMINED ON INSTL. -------*-------	953999	6
610	285T0447-5	....CLIP- SUPPLIER CODE: V89954	953999	1
612	285T0449-12	....PANEL- SUPPLIER CODE: V89954	953999	1
614	285T0447-1	...PANEL ASSY-REAR SUPPLIER CODE: V89954	953999	1
616	F22A27M22-40	....NUT-ANCHOR SUPPLIER CODE: V0217B ATTACHING PARTS	953999	3
- 618	BACR15BB2AD	....RIVET- SIZE DETERMINED ON INSTL. -------*-------	953999	6
620	285T0447-4	....CLIP- SUPPLIER CODE: V89954	953999	1

MISSING ITEM NUMBERS NOT APPLICABLE

- ITEM NOT ILLUSTRATED

BOEING PROPRIETARY - Copyright © - Unpublished Work - See title page for details.

FIG ITEM	PART NUMBER	1 2 3 4 5 6 7 NOMENCLATURE	EFFECT FROM TO	UNITS PER ASSY
25				
622	285T0447-3	....SPACER- SUPPLIER CODE: V89954	953999	1
624	285T0447-2	....PANEL- SUPPLIER CODE: V89954	953999	1
626	285T0446-1	...SUPPORT ASSY-PWR SUPPLY SUPPLIER CODE: V89954	953999	1
628	TC140	....PLATE-MTG SUPPLIER CODE: V59730 SPECIFICATION NUMBER: STBP19M1 ATTACHING PARTS	953999	1
- 630	NAS600-6P	....SCREW -------*-------	953999	1
632	TC140	....PLATE-MTG SUPPLIER CODE: V59730 SPECIFICATION NUMBER: STBP19M1 ATTACHING PARTS	953999	2
- 634	MS20470A4-6	....RIVET -------*-------	953999	2
636	F22A27M22-40	....NUT-ANCHOR SUPPLIER CODE: V0217B ATTACHING PARTS	953999	1
- 638	BACR15BB2AD	....RIVET- SIZE DETERMINED ON INSTL. -------*-------	953999	2

MISSING ITEM NUMBERS NOT APPLICABLE

- ITEM NOT ILLUSTRATED

BOEING PROPRIETARY - Copyright © - Unpublished Work - See title page for details.

FIG ITEM	PART NUMBER	1 2 3 4 5 6 7 NOMENCLATURE	EFFECT FROM TO	UNITS PER ASSY
25				
640	RMF9201M40	....NUTPLATE SUPPLIER CODE: V72962 SPECIFICATION NUMBER: BACN10JN04 OPTIONAL PART: BRFM20A04L V52828 MF1000-04BAC V15653 NS103218-40 V80539 MF53049-04 V15653 T8124S04S V11815 VN252A40L V92215 ATTACHING PARTS	953999	8
- 642	BACR15BA3AD	....RIVET- SIZE DETERMINED ON INSTL. -------*-------	953999	16
644	285T0446-2	....BRACKET-SPRT SUPPLIER CODE: V89954	953999	1
646	285T0445-5	..MODULE ASSY-ELECT. SUPPLIER CODE: V89954	953999	1
- 650	285T0445-6	...MODULE ASSY- SUPPLIER CODE: V89954	953999	RF
654	285T0253-5	....PMD ASSY- SUPPLIER CODE: V89954	953999	2
658	BAC27TEX2007	.....DECAL- OPTIONAL PART: WHB673-10X05 V85480	953999	1
658	WHB673-10X05	.....DECAL- SUPPLIER CODE: V85480 OPTIONAL PART: BAC27TEX2007	953999	1

MISSING ITEM NUMBERS NOT APPLICABLE

- ITEM NOT ILLUSTRATED

BOEING PROPRIETARY - Copyright © - Unpublished Work - See title page for details.

FIG ITEM	PART NUMBER	1 2 3 4 5 6 7 NOMENCLATURE	EFFECT FROM TO	UNITS PER ASSY
25				
700	285T0557-1	.PANEL ASSY-DUAL ADF CONT SUPPLIER CODE: V89954 ELECTRICAL EQUIP NUMBER: M01046 COMPONENT MAINT MANUAL REF: 34-57-62 FOR OTHER SYS DETAILS SEE: 11-31-05-44 33-13-58-01 34-57-02-02	953999	1
705	BAC27TEX3471	..MARKER- SUPPLIER CODE: V89954 QUALIFIED OPTIONAL DATA: BAC27TEX3471 IS OPT TO BAC27TEX4182 WHEN USED WITH ASSOCIATED PARTS	953999	1
710	BAC27TEX4182	..MARKER- SUPPLIER CODE: V89954 QUALIFIED OPTIONAL DATA: BAC27TEX3471 IS OPT TO BAC27TEX4182 WHEN USED WITH ASSOCIATED PARTS	953999	1
715	NAS1801-04-5	..SCREW	953999	12
720	NAS514P440-4P	..SCREW	953999	4
725	NAS514P440-5P	..SCREW	953999	10
730	MS35206-202	..SCREW	953999	4
735	MS35338-40	..WASHER	953999	8
740	AN960-4L	..WASHER	953999	8
743	WCS225-5	..SEAL ASSY-SHAFT SUPPLIER CODE: V51074 QUALIFIED OPTIONAL DATA: (OPT WCS225-9 WHEN USED WITH ASSOCIATED ITEMS)	953999	2
743	WCS225-9	..SEAL ASSY-SHAFT SUPPLIER CODE: V51074 QUALIFIED OPTIONAL DATA: (OPT WCS225-5 WHEN USED WITH ASSOCIATED ITEMS)	953999	2
746	285T0580-2	..GASKET ASSY-LCD MODULE SUPPLIER CODE: V89954 OPTIONAL PART: 285T0580-1 V89954	953999	2

MISSING ITEM NUMBERS NOT APPLICABLE

— ITEM NOT ILLUSTRATED

BOEING PROPRIETARY - Copyright © - Unpublished Work - See title page for details.

FIG ITEM	PART NUMBER	1 2 3 4 5 6 7 NOMENCLATURE	EFFECT FROM TO	UNITS PER ASSY
25				
749	285T0580-1	..GASKET-LCD MODULE SUPPLIER CODE: V89954 OPTIONAL PART: 285T0580-2 V89954	953999	2
752	285T1151-2	..GASKET- SUPPLIER CODE: V89954 QUALIFIED OPTIONAL DATA: 285T1151-1 OPT TO 285T1151-2 WHEN USED WITH ASSOCIATED PARTS	953999	2
752	285T1151-1	..GASKET- SUPPLIER CODE: V89954 QUALIFIED OPTIONAL DATA: 285T1151-1 OPT TO 285T1151-2 WHEN USED WITH ASSOCIATED PARTS	953999	2
755	285T0549-2	..COVER ASSY- SUPPLIER CODE: V89954	953999	2
758	285T0548-6	..PANEL ASSY-FRONT SUPPLIER CODE: V89954	953999	1
761	BACS21DD1B	...STUD ASSY SUPPLIER CODE: V08524 SPECIFICATION NUMBER: BACS21DD1B	953999	4
764	SF6G6CBB5D	...NUT SUPPLIER CODE: V12324 SPECIFICATION NUMBER: BACN10PA06-6	953999	2
767	U256-1	...NUT-PRESS SUPPLIER CODE: V46384	953999	8
770	285T0548-16	...PANEL- SUPPLIER CODE: V89954	953999	1

MISSING ITEM NUMBERS NOT APPLICABLE

– ITEM NOT ILLUSTRATED

BOEING PROPRIETARY - Copyright © - Unpublished Work - See title page for details.

FIG ITEM	PART NUMBER	1 2 3 4 5 6 7 NOMENCLATURE	EFFECT FROM TO	UNITS PER ASSY
25				
773	285T0550-15	..PANEL ASSY-SIDE SUPPLIER CODE: V89954 OPTIONAL PART: 285T0550-3 V89954 285T0550-11 V89954	953999	1
773	285T0550-11	..PANEL ASSY-SIDE SUPPLIER CODE: V89954 OPTIONAL PART: 285T0550-3 V89954 285T0550-15 V89954	953999	1
773	285T0550-3	..PANEL ASSY-SIDE SUPPLIER CODE: V89954 OPTIONAL PART: 285T0550-11 V89954 285T0550-15 V89954	953999	1
776	285T0550-16	..PANEL ASSY-SIDE SUPPLIER CODE: V89954 OPTIONAL PART: 285T0550-4 V89954 285T0550-12 V89954	953999	1
776	285T0550-12	..PANEL ASSY-SIDE SUPPLIER CODE: V89954 OPTIONAL PART: 285T0550-4 V89954 285T0550-16 V89954	953999	1
776	285T0550-4	..PANEL ASSY-SIDE SUPPLIER CODE: V89954 OPTIONAL PART: 285T0550-12 V89954 285T0550-16 V89954	953999	1

MISSING ITEM NUMBERS NOT APPLICABLE

– ITEM NOT ILLUSTRATED

BOEING PROPRIETARY - Copyright © - Unpublished Work - See title page for details.

FIG ITEM	PART NUMBER	1 2 3 4 5 6 7 NOMENCLATURE	EFFECT FROM TO	UNITS PER ASSY
25				
779	FE0440EF	...NUT-PRESS SUPPLIER CODE: V46384	953999	2
782	FE0440EF	...NUT-PRESS SUPPLIER CODE: V46384 USED ON: 285T0550-11 285T0550-12 285T0550-15 285T0550-16	953999	4
782	FE0X440	...NUT-PRESS SUPPLIER CODE: V46384 USED ON: 285T0550-3 285T0550-4	953999	4
785	LAC440-1	...NUT-PRESS SUPPLIER CODE: V46384 USED ON: 285T0550-3 285T0550-4 285T0550-11 285T0550-12	953999	4
788	BACN10XR04	...NUTPLATE- USED ON: 285T0550-15 285T0550-16 ATTACHING PARTS	953999	4
- 791	BACR15BA2AD	...RIVET- SIZE DETERMINED ON INSTL. USED ON: 285T0550-15 285T0550-16 -------*-------	953999	8
794	F22A27M22-40	...NUT-ANCHOR SUPPLIER CODE: V0217B ATTACHING PARTS	953999	2
- 797	BACR15BA2AD	...RIVET- SIZE DETERMINED ON INSTL. -------*-------	953999	4
800	285T0550-19	...PANEL- SUPPLIER CODE: V89954 USED ON: 285T0550-15	953999	1

MISSING ITEM NUMBERS NOT APPLICABLE

- ITEM NOT ILLUSTRATED

BOEING PROPRIETARY - Copyright © - Unpublished Work - See title page for details.

FIG ITEM	PART NUMBER	1 2 3 4 5 6 7 NOMENCLATURE	EFFECT FROM TO	UNITS PER ASSY
25				
800	285T0550-7	...PANEL- SUPPLIER CODE: V89954 USED ON: 285T0550-3 285T0550-11	953999	1
803	285T0550-20	...PANEL- SUPPLIER CODE: V89954 USED ON: 285T0550-16	953999	1
803	285T0550-8	...PANEL- SUPPLIER CODE: V89954 USED ON: 285T0550-4 285T0550-12	953999	1
806	285T0561-1	..MODULE ASSY-ELECT. SUPPLIER CODE: V89954	953999	1
809	285T0569-1	...DEVICE ASSY-PROGRAMMED MEMORY SUPPLIER CODE: V89954	953999	2
812	BAC27TEX2007	....DECAL- OPTIONAL PART: WHB673-1D0X0D5 V85480	953999	1
812	WHB673-1D0X0D5	....DECAL- SUPPLIER CODE: V85480 OPTIONAL PART: BAC27TEX2007	953999	1
815	285T0546-3	..PANEL-REAR SUPPLIER CODE: V89954	953999	1
820	285T0553-4	.PANEL ASSY-ILS CONT SUPPLIER CODE: V89954 ELECTRICAL EQUIP NUMBER: M00087 COMPONENT MAINT MANUAL REF: 34-31-61 FOR OTHER SYS DETAILS SEE: 11-31-05-44 33-13-58-01 34-31-02-01	952999	1

MISSING ITEM NUMBERS NOT APPLICABLE

– ITEM NOT ILLUSTRATED

BOEING PROPRIETARY - Copyright © - Unpublished Work - See title page for details.

FIG ITEM	PART NUMBER	1 2 3 4 5 6 7 NOMENCLATURE	EFFECT FROM TO	UNITS PER ASSY
25				
820	285T0553-1	.PANEL ASSY-ILS CONT SUPPLIER CODE: V89954 ELECTRICAL EQUIP NUMBER: M00087 COMPONENT MAINT MANUAL REF: 34-31-61 FOR OTHER SYS DETAILS SEE: 11-31-05-44 33-13-58-01 34-31-02-01	952999	1
820	285T0553-2	.PANEL ASSY-ILS CONT SUPPLIER CODE: V89954 ELECTRICAL EQUIP NUMBER: M00087 COMPONENT MAINT MANUAL REF: 34-31-61 FOR OTHER SYS DETAILS SEE: 11-31-05-44 33-13-58-01 34-31-02-01	952999	1
820	285T0553-3	.PANEL ASSY-ILS CONT SUPPLIER CODE: V89954 ELECTRICAL EQUIP NUMBER: M00087 FOR OTHER SYS DETAILS SEE: 11-31-05-44 33-13-58-01 34-31-02-01	952999	1
823	BAC27TEX3465	..MARKER-ALUMINUM FOIL SUPPLIER CODE: V89954 QUALIFIED OPTIONAL DATA: BAC27TEX3465 OR BAC27TEX4173 OR BAC27TEX4812 ARE ALL OPT WHEN USED WITH ASSOCIATED PARTS USED ON: 285T0553-4	952999	1
823	BAC27TEX3465	..MARKER-ALUMINUM FOIL SUPPLIER CODE: V89954 USED ON: 285T0553-1 285T0553-2 285T0553-3	952999	1

MISSING ITEM NUMBERS NOT APPLICABLE

– ITEM NOT ILLUSTRATED

BOEING PROPRIETARY - Copyright © - Unpublished Work - See title page for details.

FIG ITEM	PART NUMBER	1 2 3 4 5 6 7 NOMENCLATURE	EFFECT FROM TO	UNITS PER ASSY
25				
826	BAC27TEX4173	..MARKER-ALUMINUM FOIL SUPPLIER CODE: V89954 QUALIFIED OPTIONAL DATA: BAC27TEX3465 OR BAC27TEX4173 OR BAC27TEX4812 ARE ALL OPT WHEN USED WITH ASSOCIATED PARTS USED ON: 285T0553-4	952999	1
829	BAC27TEX4812	..MARKER-ALUMINUM FOIL SUPPLIER CODE: V89954 QUALIFIED OPTIONAL DATA: BAC27TEX3465 OR BAC27TEX4173 OR BAC27TEX4812 ARE ALL OPT WHEN USED WITH ASSOCIATED PARTS USED ON: 285T0553-4	952999	1
832	MS35206-202	..SCREW	952999	4
835	NAS514P440-4P	..SCREW	952999	4
838	NAS514P440-5P	..SCREW	952999	12
841	NAS1801-04-5	..SCREW	952999	6
844	MS35338-40	..WASHER	952999	2
847	AN960-4L	..WASHER	952999	2
850	WCS225-7	..SEAL ASSY-SHAFT SUPPLIER CODE: V51074	952999	2
853	285T0580-1	..GASKET-LCD MODULE SUPPLIER CODE: V89954 QUALIFIED OPTIONAL DATA: 285T0580-1 OPT TO 285T0580-2 WHEN USED WITH ASSOCIATED PARTS USED ON: 285T0553-4	952999	2
853	285T0580-1	..GASKET-LCD MODULE SUPPLIER CODE: V89954 USED ON: 285T0553-1 285T0553-2 285T0553-3	952999	2

MISSING ITEM NUMBERS NOT APPLICABLE

– ITEM NOT ILLUSTRATED

BOEING PROPRIETARY - Copyright © - Unpublished Work - See title page for details.

FIG ITEM	PART NUMBER	1 2 3 4 5 6 7 NOMENCLATURE	EFFECT FROM TO	UNITS PER ASSY
25				
856	285T0580-2	..GASKET ASSY-LCD MODULE SUPPLIER CODE: V89954 QUALIFIED OPTIONAL DATA: 285T0580-1 OPT TO 285T0580-2 WHEN USED WITH ASSOCIATED PARTS USED ON: 285T0553-4	952999	2
859	285T1151-1	..GASKET- SUPPLIER CODE: V89954 QUALIFIED OPTIONAL DATA: 285T1151-1 OPT TO 285T1151-2 WHEN USED WITH ASSOCIATED PARTS USED ON: 285T0553-4	952999	2
859	285T1151-2	..GASKET- SUPPLIER CODE: V89954 QUALIFIED OPTIONAL DATA: 285T1151-1 OPT TO 285T1151-2 WHEN USED WITH ASSOCIATED PARTS USED ON: 285T0553-4	952999	2
862	285T0549-1	..COVER ASSY- SUPPLIER CODE: V89954	952999	2
865	285T0548-1	..PANEL ASSY-FRONT SUPPLIER CODE: V89954	952999	1
868	BACS21DD1B	...STUD ASSY SUPPLIER CODE: V08524 SPECIFICATION NUMBER: BACS21DD1B	952999	4
871	SF6G6CBB5D	...NUT SUPPLIER CODE: V12324 SPECIFICATION NUMBER: BACN10PA06-6	952999	2
874	U256-1	...NUT-PRESS SUPPLIER CODE: V46384	952999	8
877	285T0548-11	...PANEL- SUPPLIER CODE: V89954	952999	1

MISSING ITEM NUMBERS NOT APPLICABLE

– ITEM NOT ILLUSTRATED

BOEING PROPRIETARY - Copyright © - Unpublished Work - See title page for details.

FIG ITEM	PART NUMBER	1 2 3 4 5 6 7 NOMENCLATURE	EFFECT FROM TO	UNITS PER ASSY
25				
880	285T0550-13	..PANEL ASSY-SIDE SUPPLIER CODE: V89954 OPTIONAL PART: 285T0550-1 V89954 285T0550-9 V89954	952999	1
880	285T0550-9	..PANEL ASSY-SIDE SUPPLIER CODE: V89954 OPTIONAL PART: 285T0550-1 V89954 285T0550-13 V89954	952999	1
880	285T0550-1	..PANEL ASSY-SIDE SUPPLIER CODE: V89954 OPTIONAL PART: 285T0550-9 V89954 285T0550-13 V89954	952999	1
883	285T0550-14	..PANEL ASSY-SIDE SUPPLIER CODE: V89954 OPTIONAL PART: 285T0550-2 V89954 285T0550-10 V89954	952999	1
883	285T0550-10	..PANEL ASSY-SIDE SUPPLIER CODE: V89954 OPTIONAL PART: 285T0550-2 V89954 285T0550-14 V89954	952999	1
883	285T0550-2	..PANEL ASSY-SIDE SUPPLIER CODE: V89954 OPTIONAL PART: 285T0550-10 V89954 285T0550-14 V89954	952999	1

MISSING ITEM NUMBERS NOT APPLICABLE

– ITEM NOT ILLUSTRATED

BOEING PROPRIETARY - Copyright © - Unpublished Work - See title page for details.

FIG ITEM	PART NUMBER	1 2 3 4 5 6 7 NOMENCLATURE	EFFECT FROM TO	UNITS PER ASSY
25				
886	FE0440EF	...NUT-PRESS SUPPLIER CODE: V46384	952999	2
889	FE0440EF	...NUT-PRESS SUPPLIER CODE: V46384 USED ON: 285T0550-9 285T0550-13 285T0550-10 285T0550-14	952999	4
889	FE0X440	...NUT-PRESS SUPPLIER CODE: V46384 USED ON: 285T0550-1 285T0550-2	952999	4
892	LAC440-1	...NUT-PRESS SUPPLIER CODE: V46384 USED ON: 285T0550-1 285T0550-9 285T0550-2 285T0550-10	952999	4
895	BACN10XR04	...NUTPLATE- USED ON: 285T0550-13 285T0550-14 ATTACHING PARTS	952999	4
- 898	BACR15BA2AD	...RIVET- SIZE DETERMINED ON INSTL. -------*-------	952999	8
901	F22A27M22-40	...NUT-ANCHOR SUPPLIER CODE: V0217B ATTACHING PARTS	952999	2
- 904	BACR15BA2AD	...RIVET- SIZE DETERMINED ON INSTL. -------*-------	952999	4
907	285T0550-17	...PANEL- SUPPLIER CODE: V89954 USED ON: 285T0550-13	952999	1

MISSING ITEM NUMBERS NOT APPLICABLE

- ITEM NOT ILLUSTRATED

BOEING PROPRIETARY - Copyright © - Unpublished Work - See title page for details.

FIG ITEM	PART NUMBER	1 2 3 4 5 6 7 NOMENCLATURE	EFFECT FROM TO	UNITS PER ASSY
25				
907	285T0550-5	...PANEL- SUPPLIER CODE: V89954 USED ON: 285T0550-1 285T0550-9	952999	1
910	285T0550-18	...PANEL- SUPPLIER CODE: V89954 USED ON: 285T0550-14	952999	1
910	285T0550-6	...PANEL- SUPPLIER CODE: V89954 USED ON: 285T0550-2 285T0550-10	952999	1
913	285T0558-3	..MODULE ASSY-ELECT. SUPPLIER CODE: V89954 QUALIFIED OPTIONAL DATA: 285T0558-3 OPT TO 285T0558-10 WHEN USED WITH ASSOCIATED PARTS USED ON: 285T0553-4	952999	1
913	285T0558-10	..MODULE ASSY-ELECT. SUPPLIER CODE: V89954 QUALIFIED OPTIONAL DATA: 285T0558-3 OPT TO 285T0558-10 WHEN USED WITH ASSOCIATED PARTS USED ON: 285T0553-4	952999	1
913	285T0558-1	..MODULE ASSY-ELECT. SUPPLIER CODE: V89954 USED ON: 285T0553-4	952999	1
913	285T0558-2	..MODULE ASSY-ELECT. SUPPLIER CODE: V89954 USED ON: 285T0553-4	952999	1

MISSING ITEM NUMBERS NOT APPLICABLE

– ITEM NOT ILLUSTRATED

BOEING PROPRIETARY - Copyright © - Unpublished Work - See title page for details.

FIG ITEM	PART NUMBER	1 2 3 4 5 6 7 NOMENCLATURE	EFFECT FROM TO	UNITS PER ASSY
25				
913	285T0558-1	..MODULE ASSY-ELECT. SUPPLIER CODE: V89954 USED ON: 285T0553-1 285T0553-3	952999	1
913	285T0558-2	..MODULE ASSY-ELECT. SUPPLIER CODE: V89954 QUALIFIED OPTIONAL DATA: 285T0558-2 OPT TO 285T0558-9 WHEN USED WITH ASSOCIATED PARTS USED ON: 285T0553-2	952999	1
913	285T0558-9	..MODULE ASSY-ELECT. SUPPLIER CODE: V89954 QUALIFIED OPTIONAL DATA: 285T0558-2 OPT TO 285T0558-9 WHEN USED WITH ASSOCIATED PARTS USED ON: 285T0553-2	952999	1
913	285T0558-1	..MODULE ASSY-ELECT. SUPPLIER CODE: V89954 USED ON: 285T0553-2	952999	1
916	285T0566-1	...PMD ASSY- SUPPLIER CODE: V89954	952999	3
919	BAC27TEX2007	....DECAL- OPTIONAL PART: WHB673-1-0X0-5 V85480 DAT59-652 V85480	952999	1
919	WHB673-1-0X0-5	....DECAL- SUPPLIER CODE: V85480 OPTIONAL PART: BAC27TEX2007 DAT59-652 V85480	952999	1

MISSING ITEM NUMBERS NOT APPLICABLE

– ITEM NOT ILLUSTRATED

BOEING PROPRIETARY - Copyright © - Unpublished Work - See title page for details.

FIG ITEM	PART NUMBER	1 2 3 4 5 6 7 NOMENCLATURE	EFFECT FROM TO	UNITS PER ASSY
25				
919	DAT59-652	....DECAL-	952999	1
		SUPPLIER CODE:		
		V85480		
		OPTIONAL PART:		
		BAC27TEX2007		
		WHB673-1-0X0-5		
		V85480		
922	285T0546-1	..PANEL-REAR	952999	1
		SUPPLIER CODE:		
		V89954		

MISSING ITEM NUMBERS NOT APPLICABLE

– ITEM NOT ILLUSTRATED

BOEING PROPRIETARY - Copyright © - Unpublished Work - See title page for details.

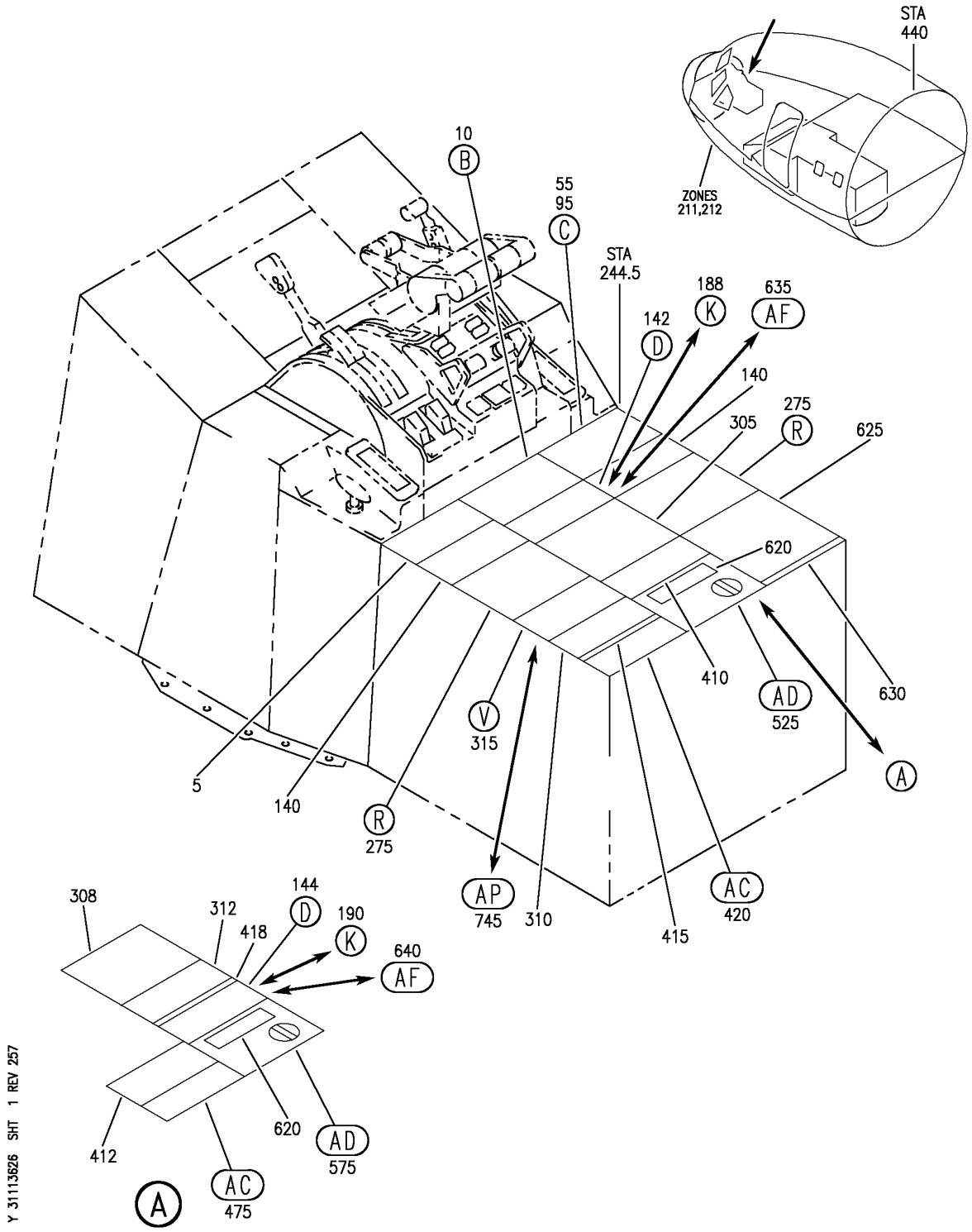

PANEL INSTL-P8 ELECTRONICS (CONTROL STAND AFT ELECTRONIC PANEL ONLY)
FIGURE 26 (SHEET 1)

BOEING PROPRIETARY - Copyright © - Unpublished Work - See title page for details.

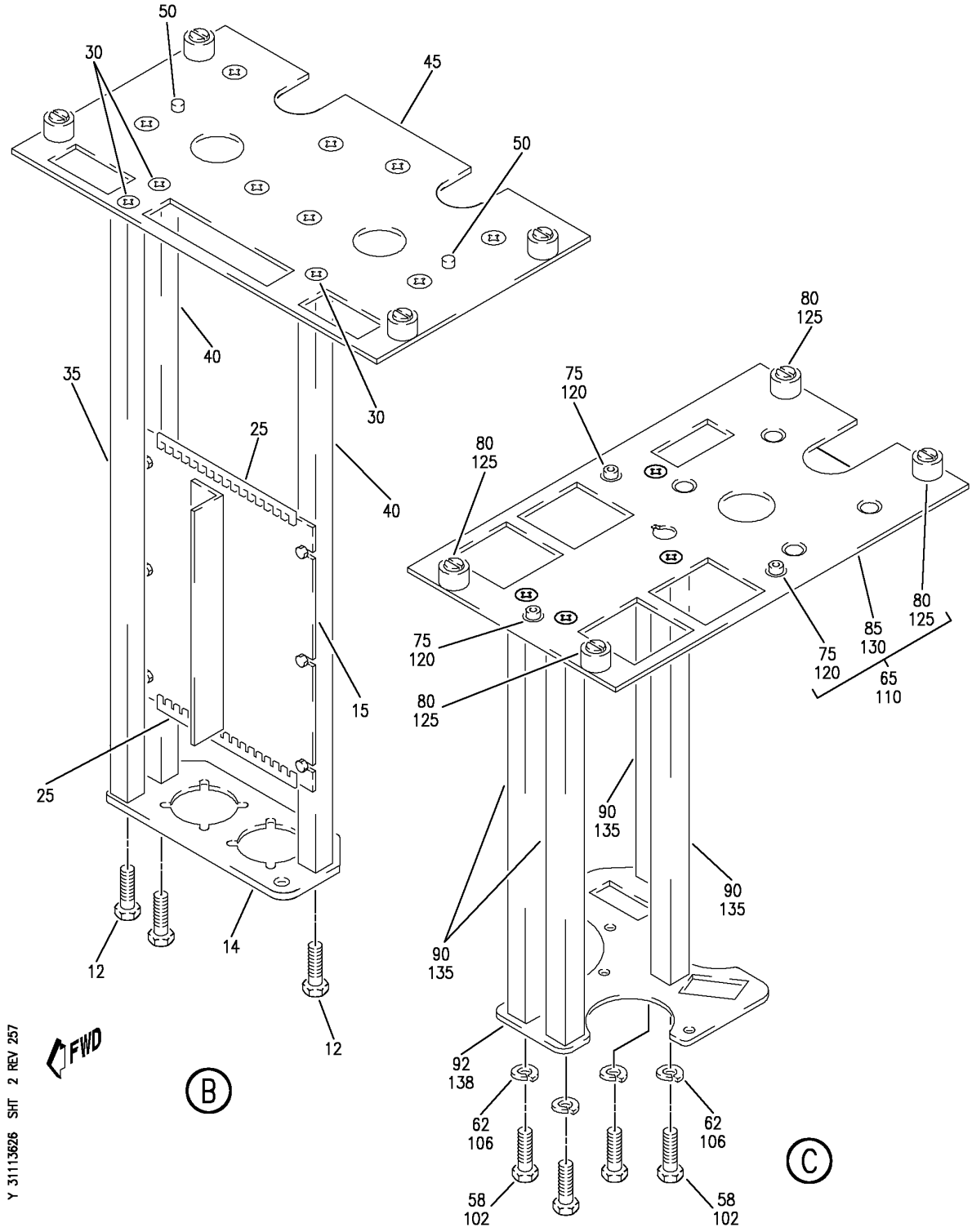

PANEL INSTL-P8 ELECTRONICS (CONTROL STAND AFT ELECTRONIC PANEL ONLY)
FIGURE 26 (SHEET 2)

BOEING PROPRIETARY - Copyright © - Unpublished Work - See title page for details.

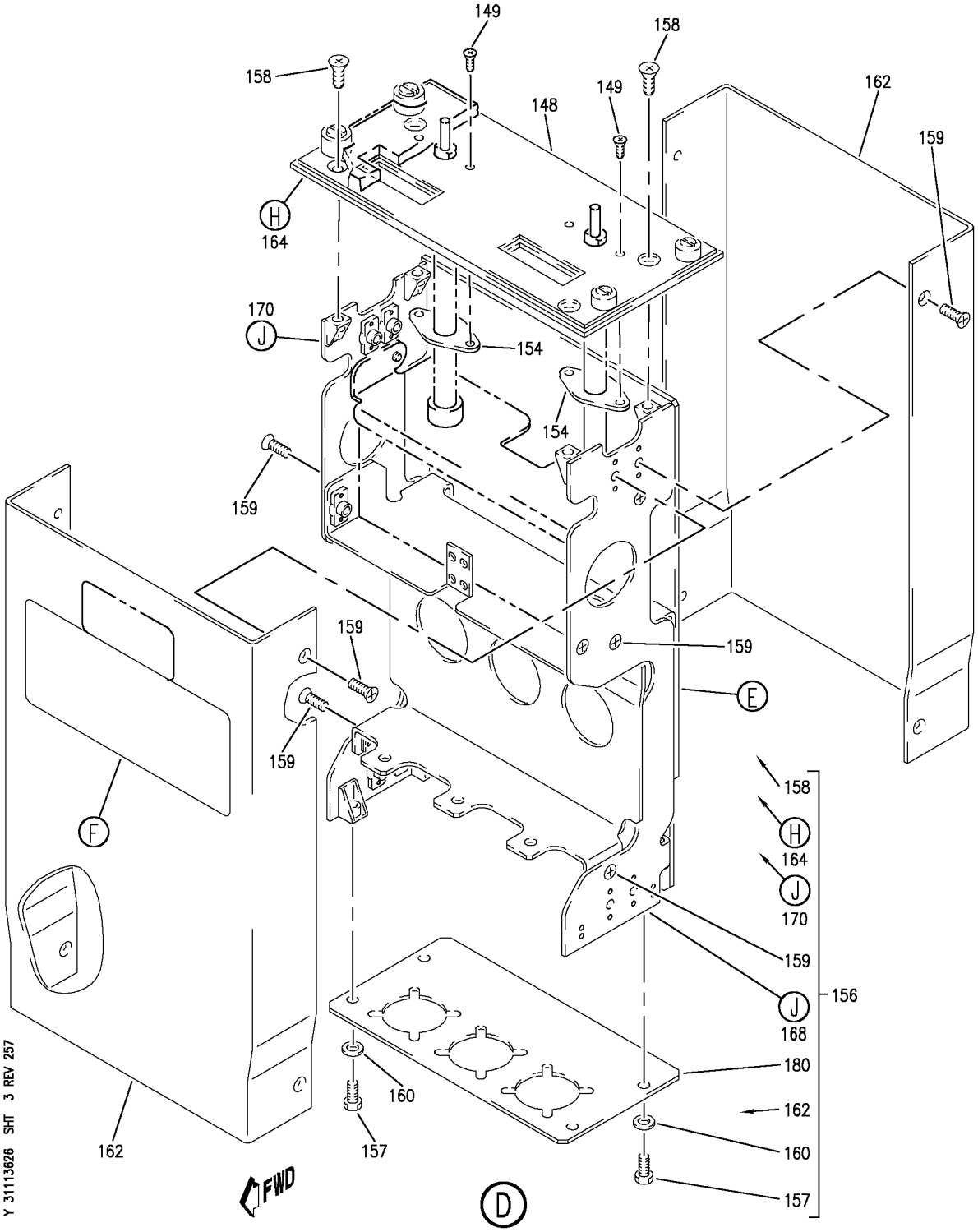

PANEL INSTL-P8 ELECTRONICS (CONTROL STAND AFT ELECTRONIC PANEL ONLY)
FIGURE 26 (SHEET 3)

BOEING PROPRIETARY - Copyright © - Unpublished Work - See title page for details.

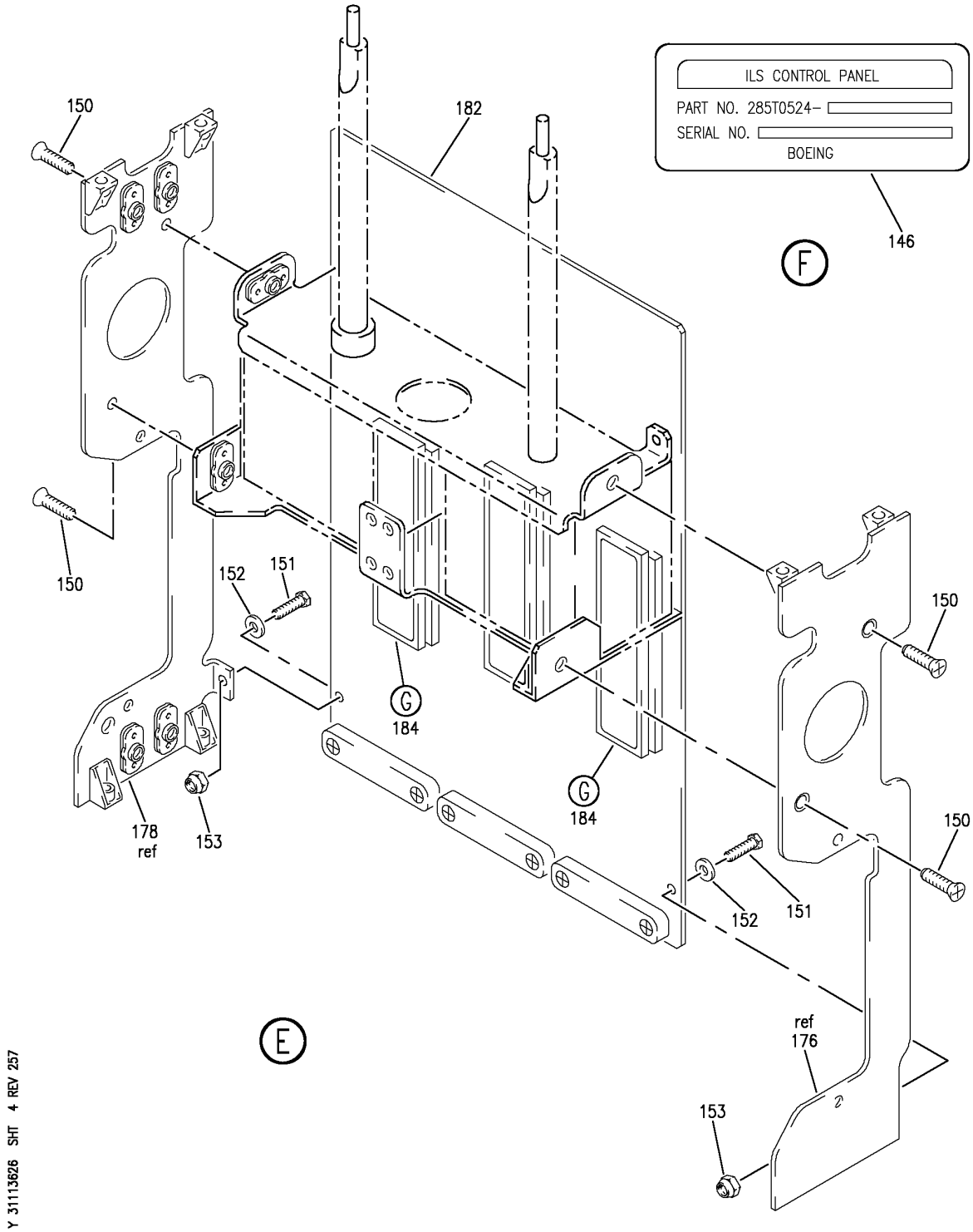

PANEL INSTL-P8 ELECTRONICS (CONTROL STAND AFT ELECTRONIC PANEL ONLY)
FIGURE 26 (SHEET 4)

BOEING PROPRIETARY - Copyright © - Unpublished Work - See title page for details.

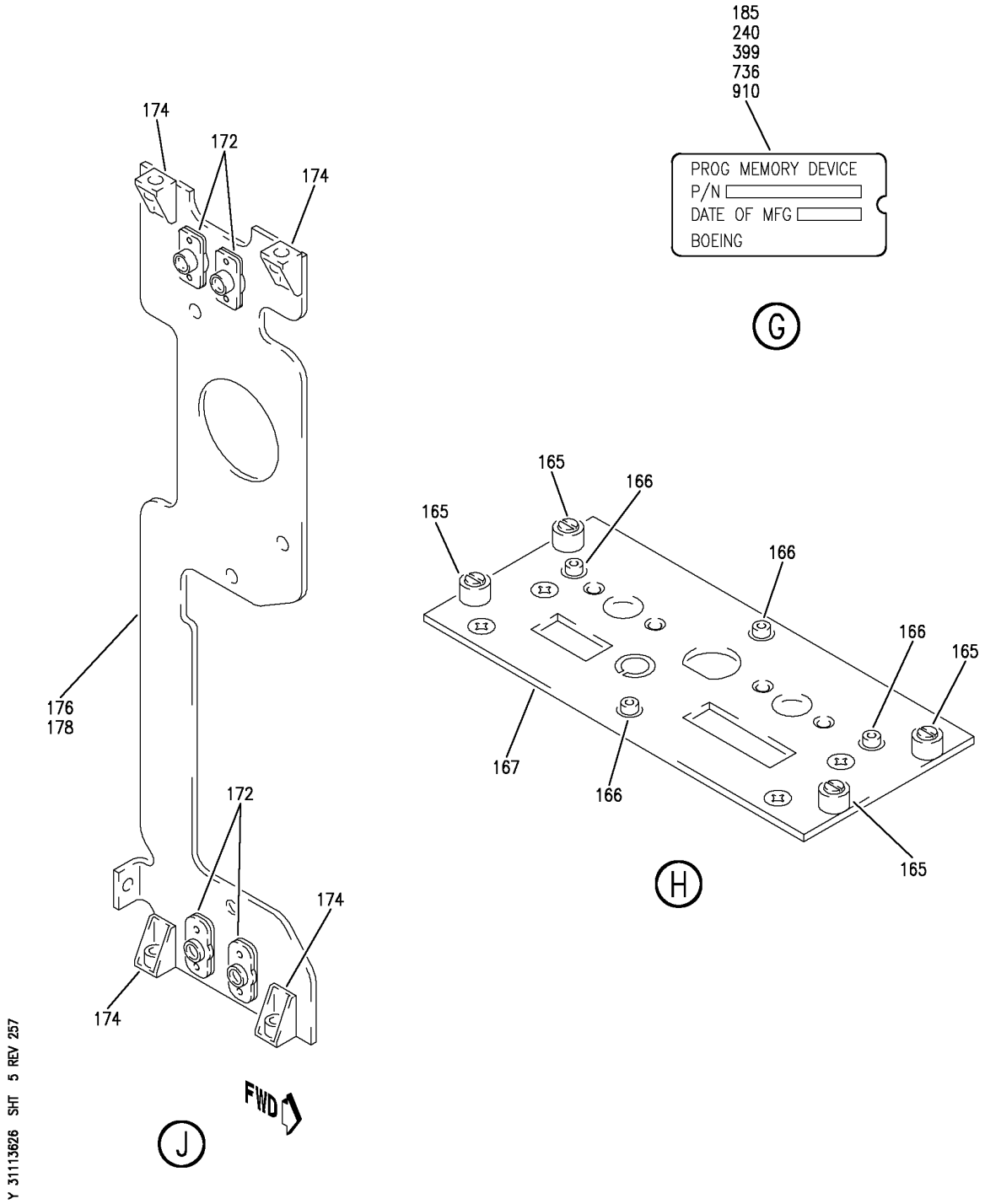

PANEL INSTL-P8 ELECTRONICS (CONTROL STAND AFT ELECTRONIC PANEL ONLY)
FIGURE 26 (SHEET 5)

BOEING PROPRIETARY - Copyright © - Unpublished Work - See title page for details.

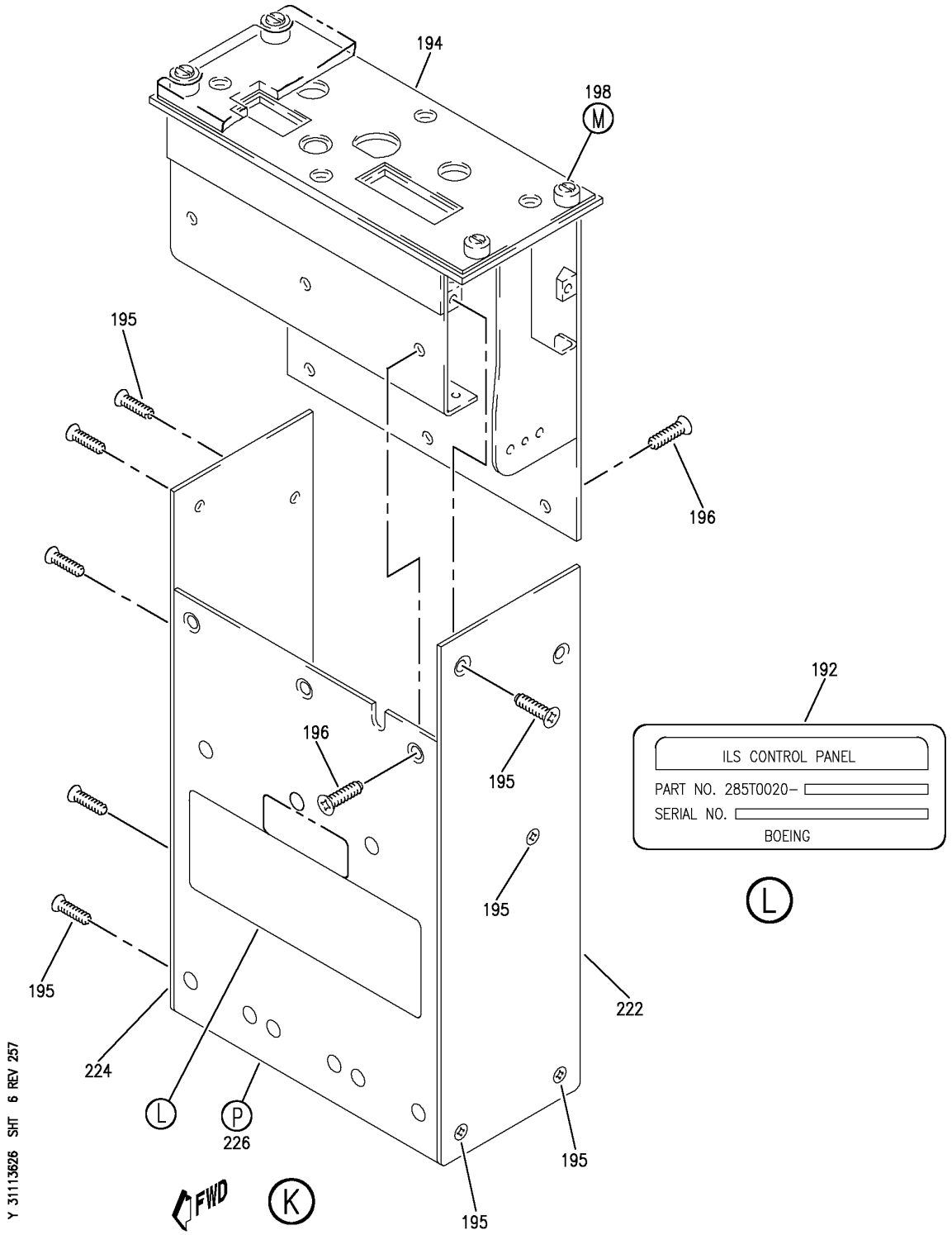

PANEL INSTL-P8 ELECTRONICS (CONTROL STAND AFT ELECTRONIC PANEL ONLY)
FIGURE 26 (SHEET 6)

BOEING PROPRIETARY - Copyright © - Unpublished Work - See title page for details.

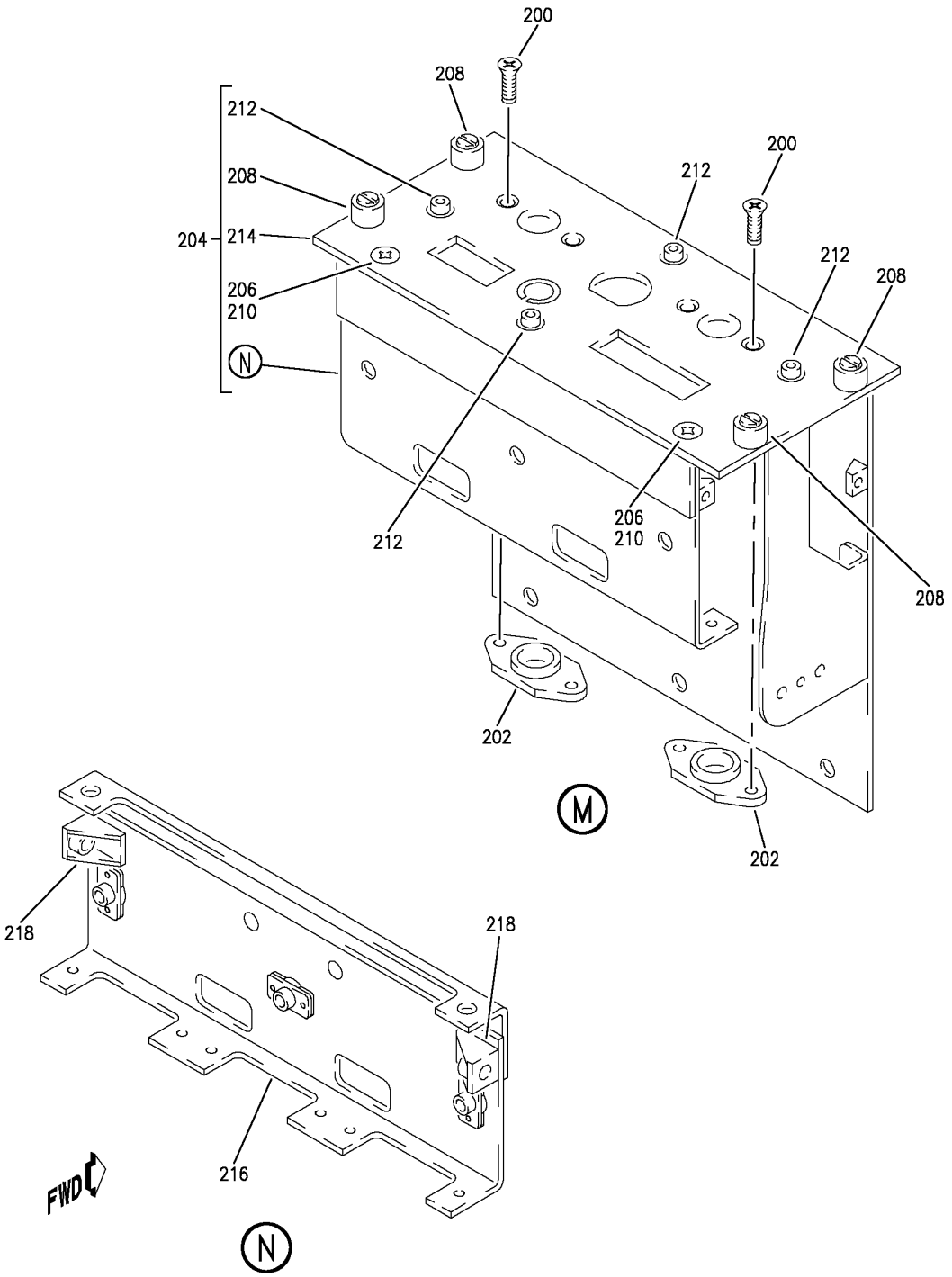

PANEL INSTL-P8 ELECTRONICS (CONTROL STAND AFT ELECTRONIC PANEL ONLY)
FIGURE 26 (SHEET 7)

BOEING PROPRIETARY - Copyright © - Unpublished Work - See title page for details.

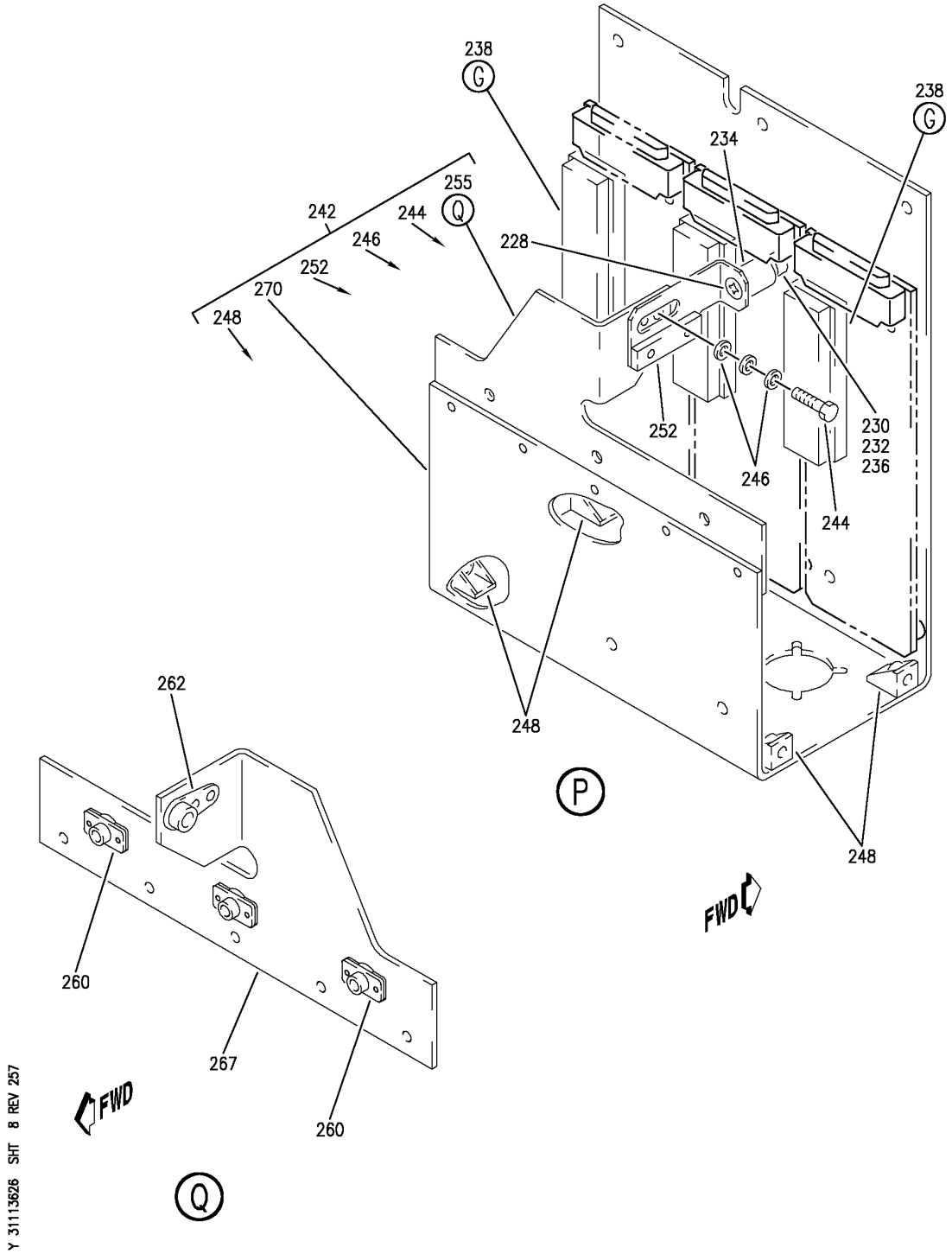

PANEL INSTL-P8 ELECTRONICS (CONTROL STAND AFT ELECTRONIC PANEL ONLY)
FIGURE 26 (SHEET 8)

BOEING PROPRIETARY - Copyright © - Unpublished Work - See title page for details.

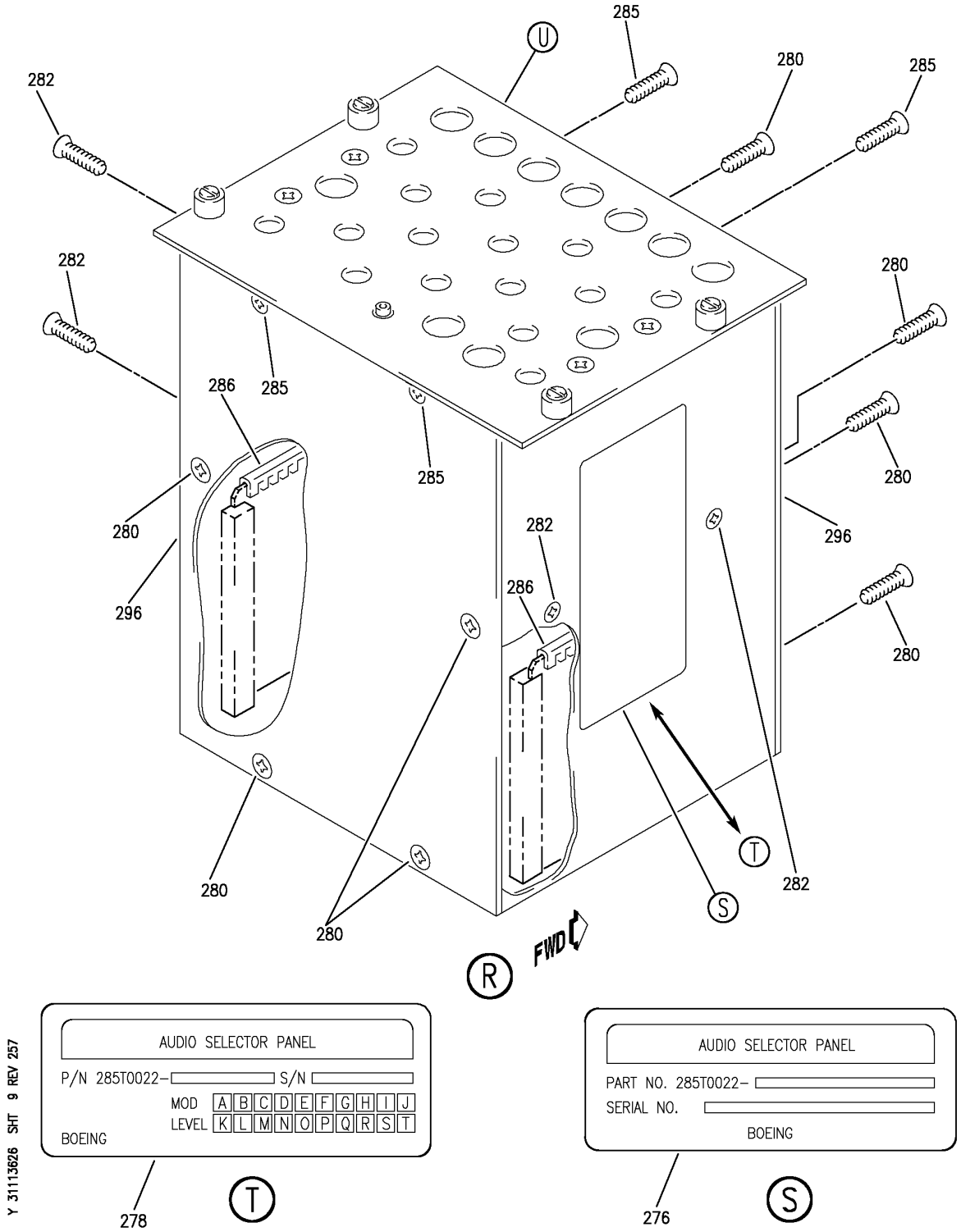

PANEL INSTL-P8 ELECTRONICS (CONTROL STAND AFT ELECTRONIC PANEL ONLY)
FIGURE 26 (SHEET 9)

BOEING PROPRIETARY - Copyright © - Unpublished Work - See title page for details.

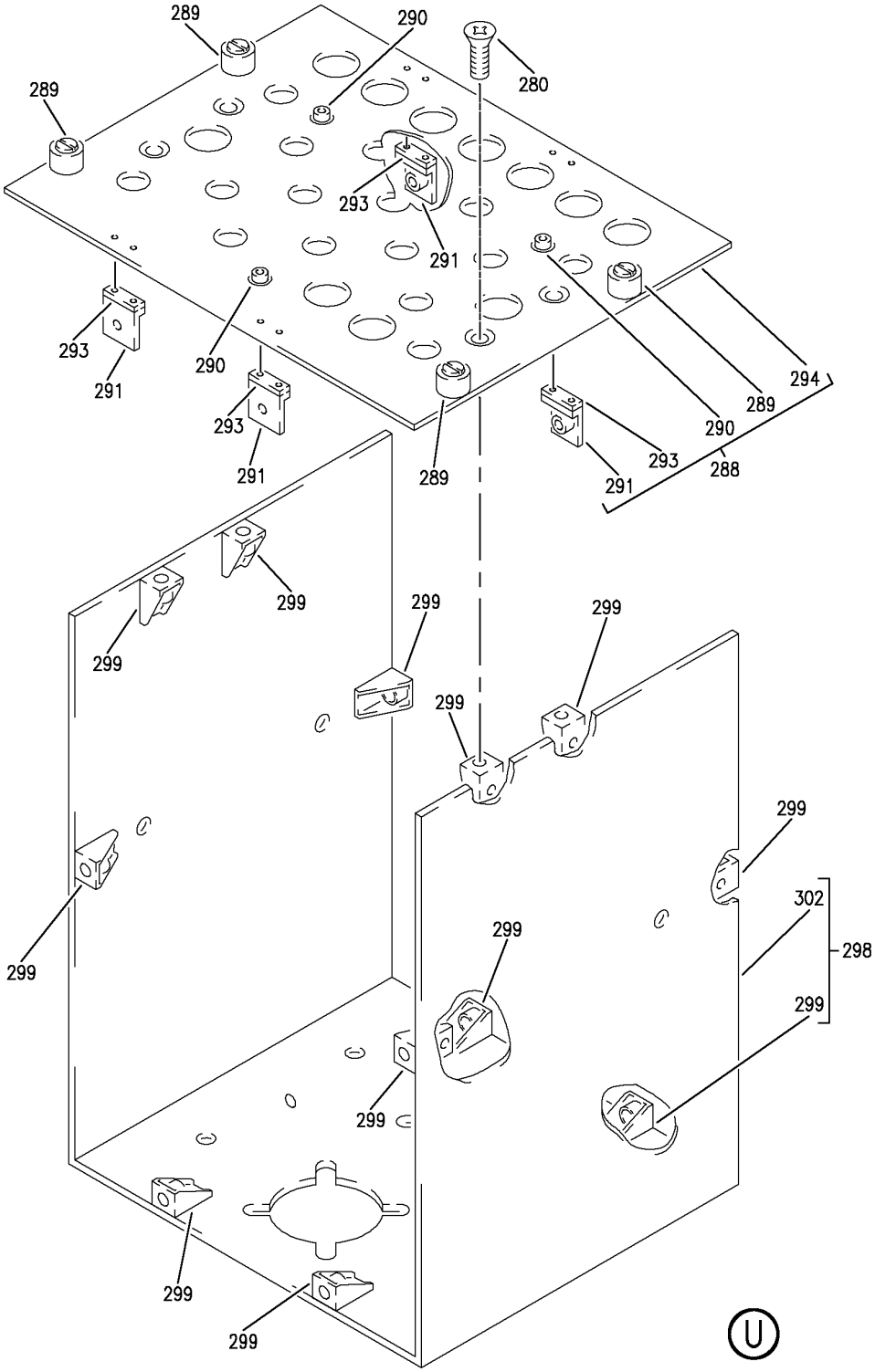

PANEL INSTL-P8 ELECTRONICS (CONTROL STAND AFT ELECTRONIC PANEL ONLY)
FIGURE 26 (SHEET 10)

BOEING PROPRIETARY - Copyright © - Unpublished Work - See title page for details.

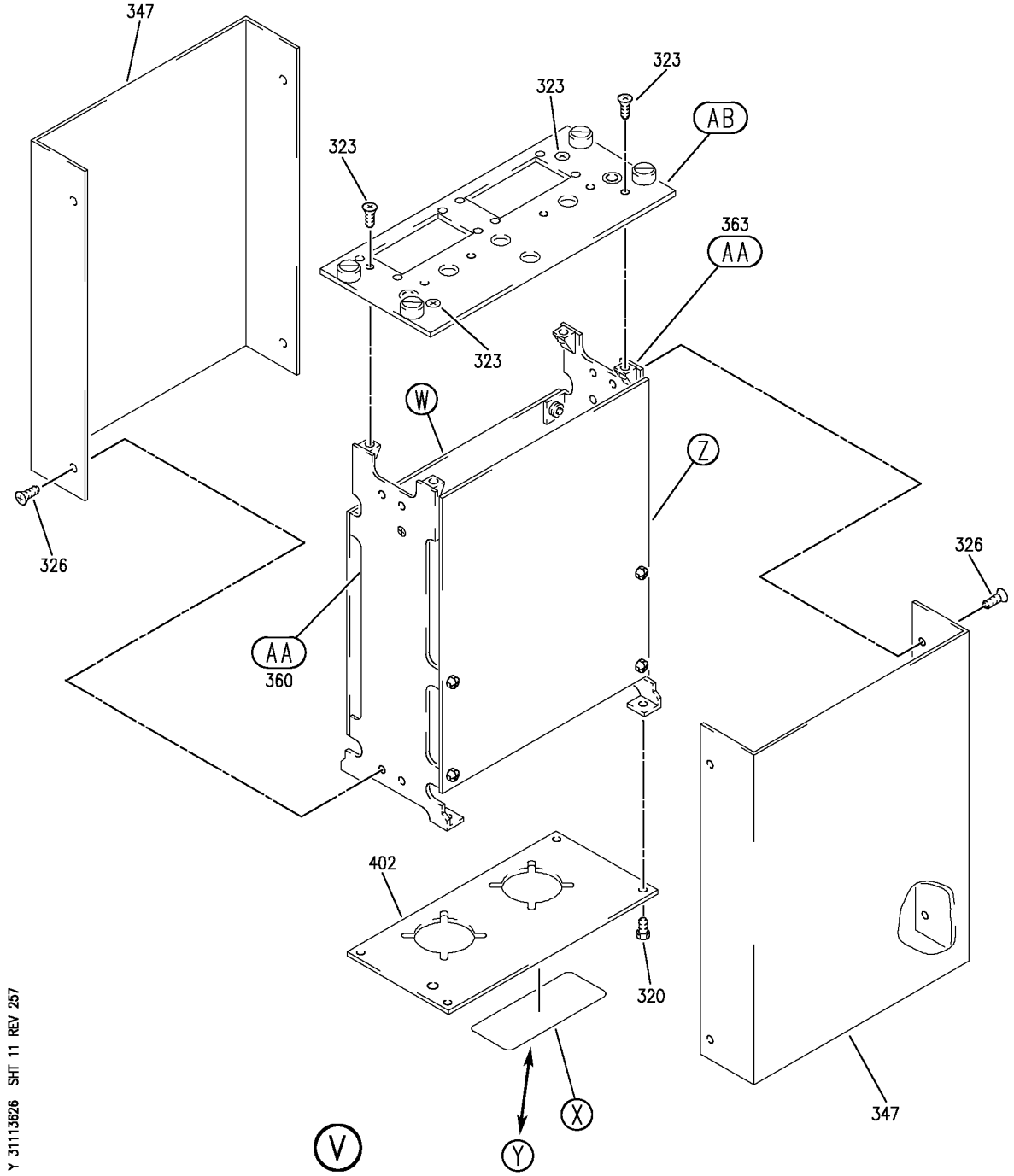

PANEL INSTL-P8 ELECTRONICS (CONTROL STAND AFT ELECTRONIC PANEL ONLY)
FIGURE 26 (SHEET 11)

BOEING PROPRIETARY - Copyright © - Unpublished Work - See title page for details.

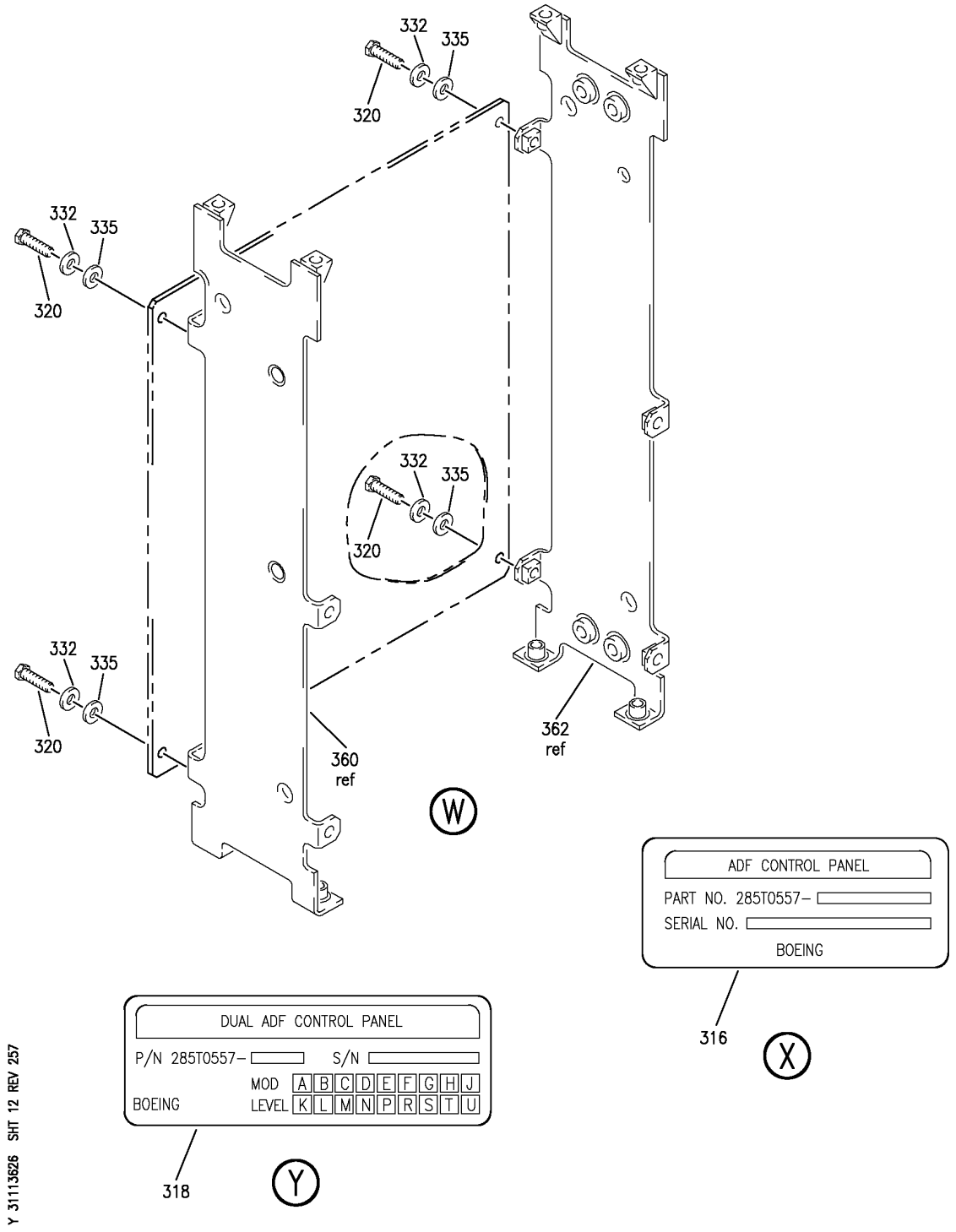

PANEL INSTL-P8 ELECTRONICS (CONTROL STAND AFT ELECTRONIC PANEL ONLY)
FIGURE 26 (SHEET 12)

BOEING PROPRIETARY - Copyright © - Unpublished Work - See title page for details.

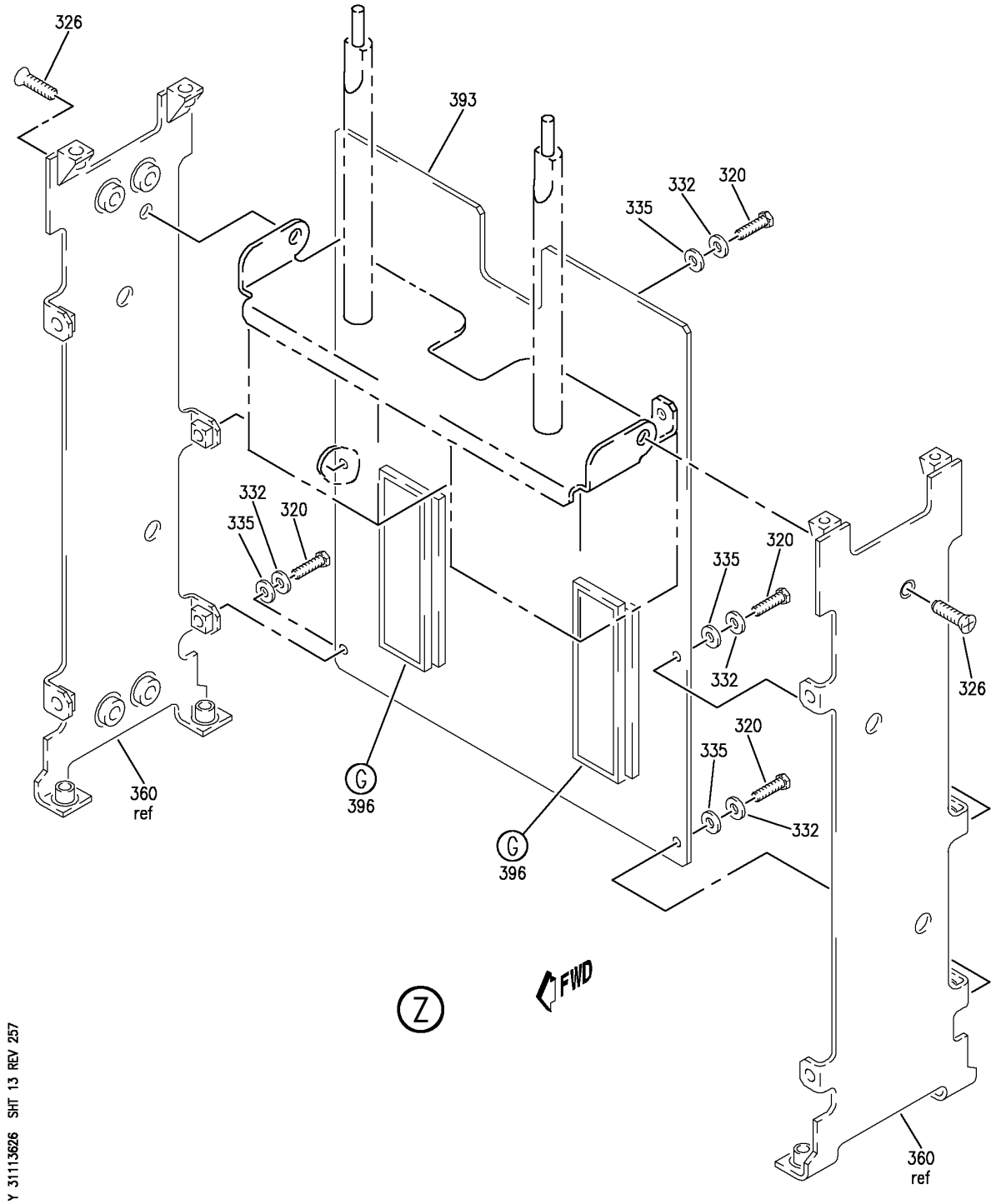

PANEL INSTL-P8 ELECTRONICS (CONTROL STAND AFT ELECTRONIC PANEL ONLY)
FIGURE 26 (SHEET 13)

BOEING PROPRIETARY - Copyright © - Unpublished Work - See title page for details.

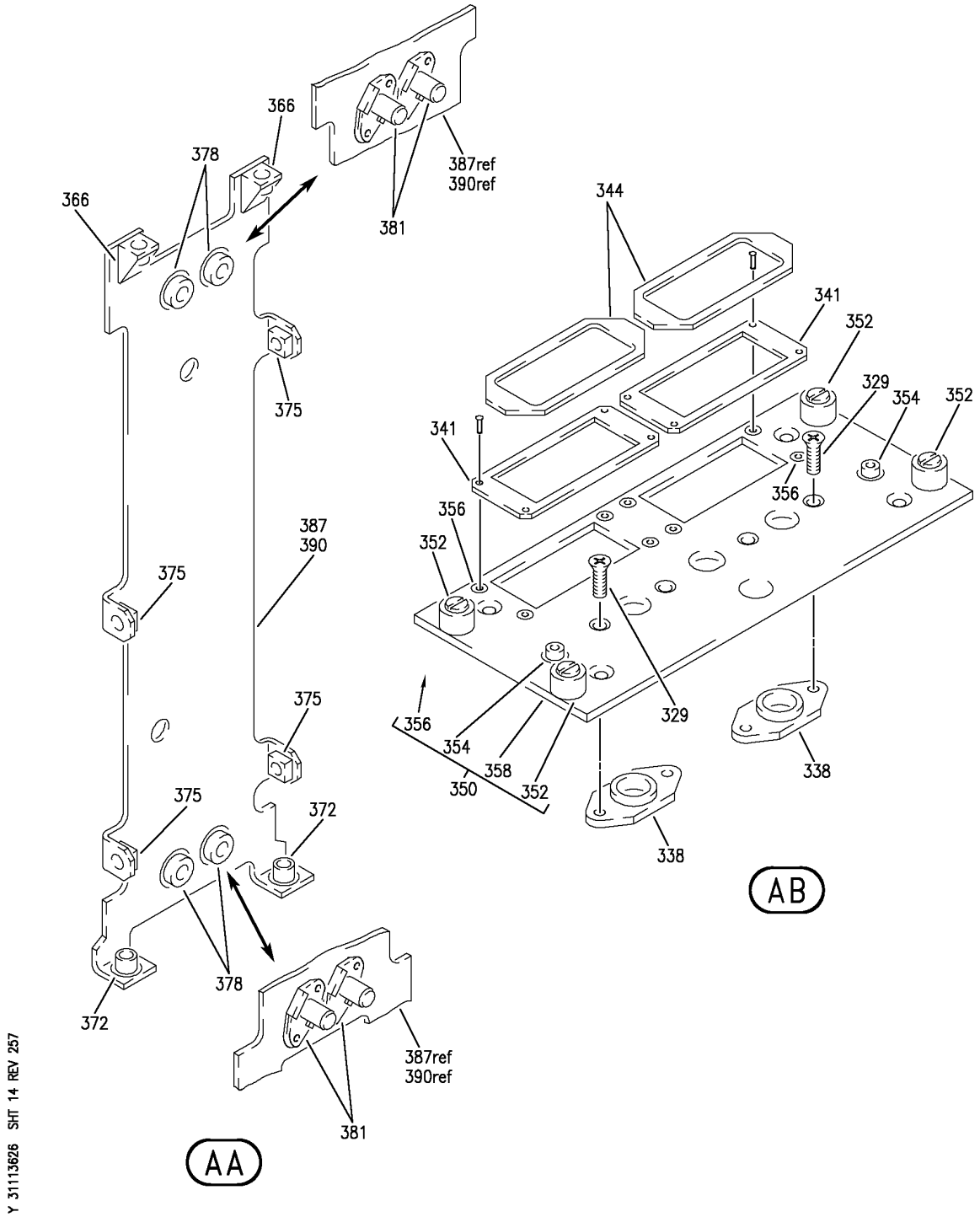

PANEL INSTL-P8 ELECTRONICS (CONTROL STAND AFT ELECTRONIC PANEL ONLY)
FIGURE 26 (SHEET 14)

BOEING PROPRIETARY - Copyright © - Unpublished Work - See title page for details.

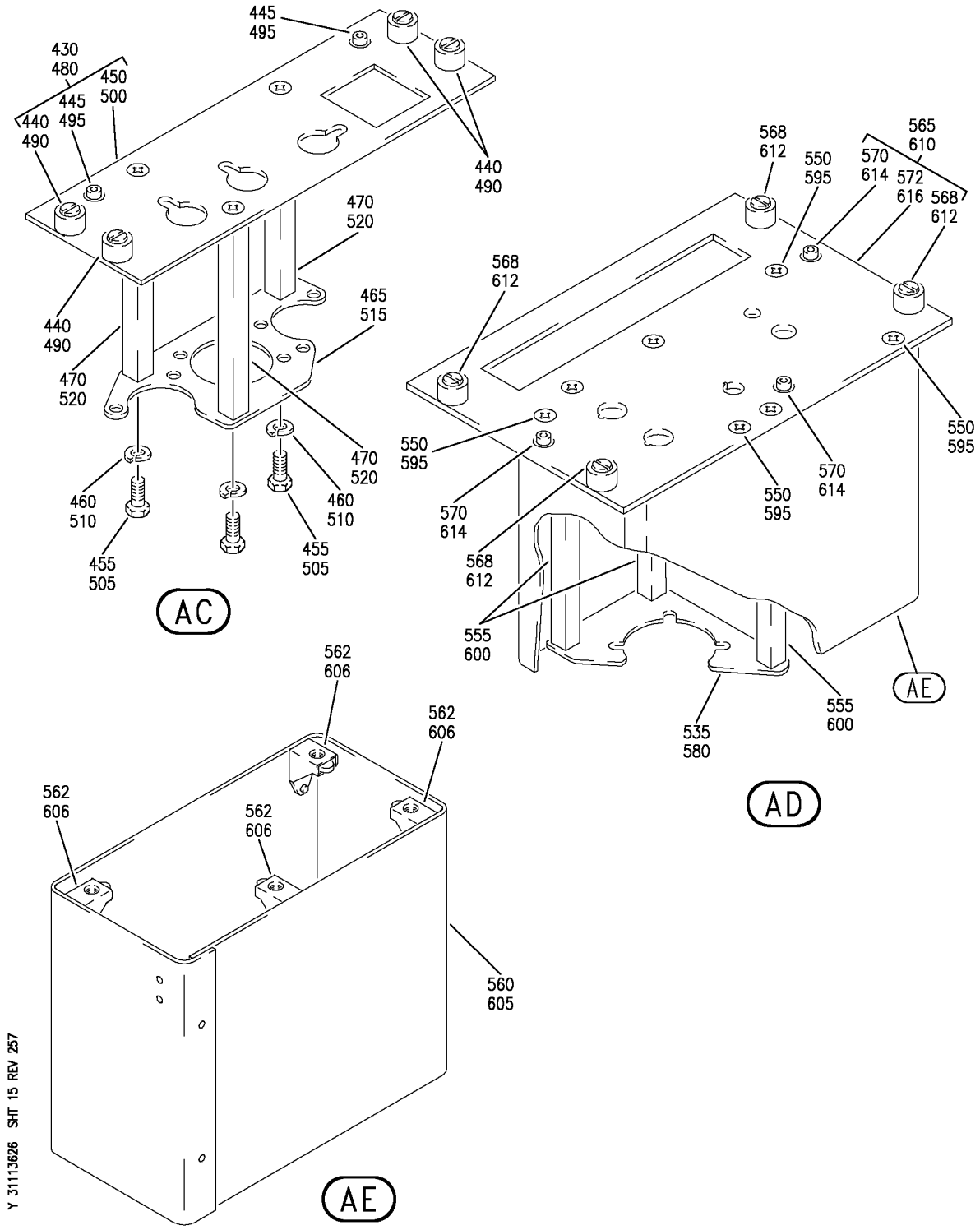

PANEL INSTL-P8 ELECTRONICS (CONTROL STAND AFT ELECTRONIC PANEL ONLY)
FIGURE 26 (SHEET 15)

BOEING PROPRIETARY - Copyright © - Unpublished Work - See title page for details.

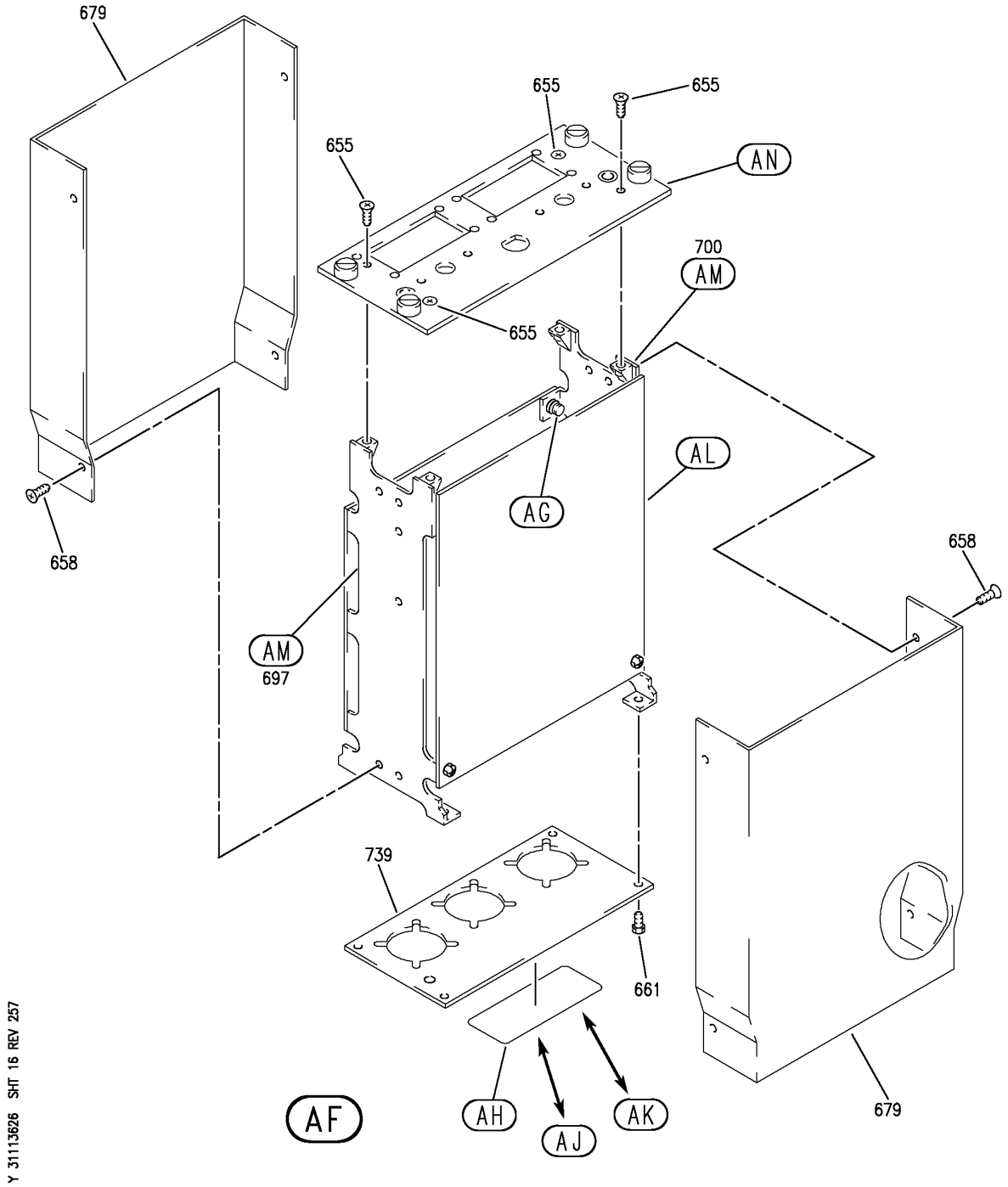

PANEL INSTL-P8 ELECTRONICS (CONTROL STAND AFT ELECTRONIC PANEL ONLY)
FIGURE 26 (SHEET 16)

BOEING PROPRIETARY - Copyright © - Unpublished Work - See title page for details.

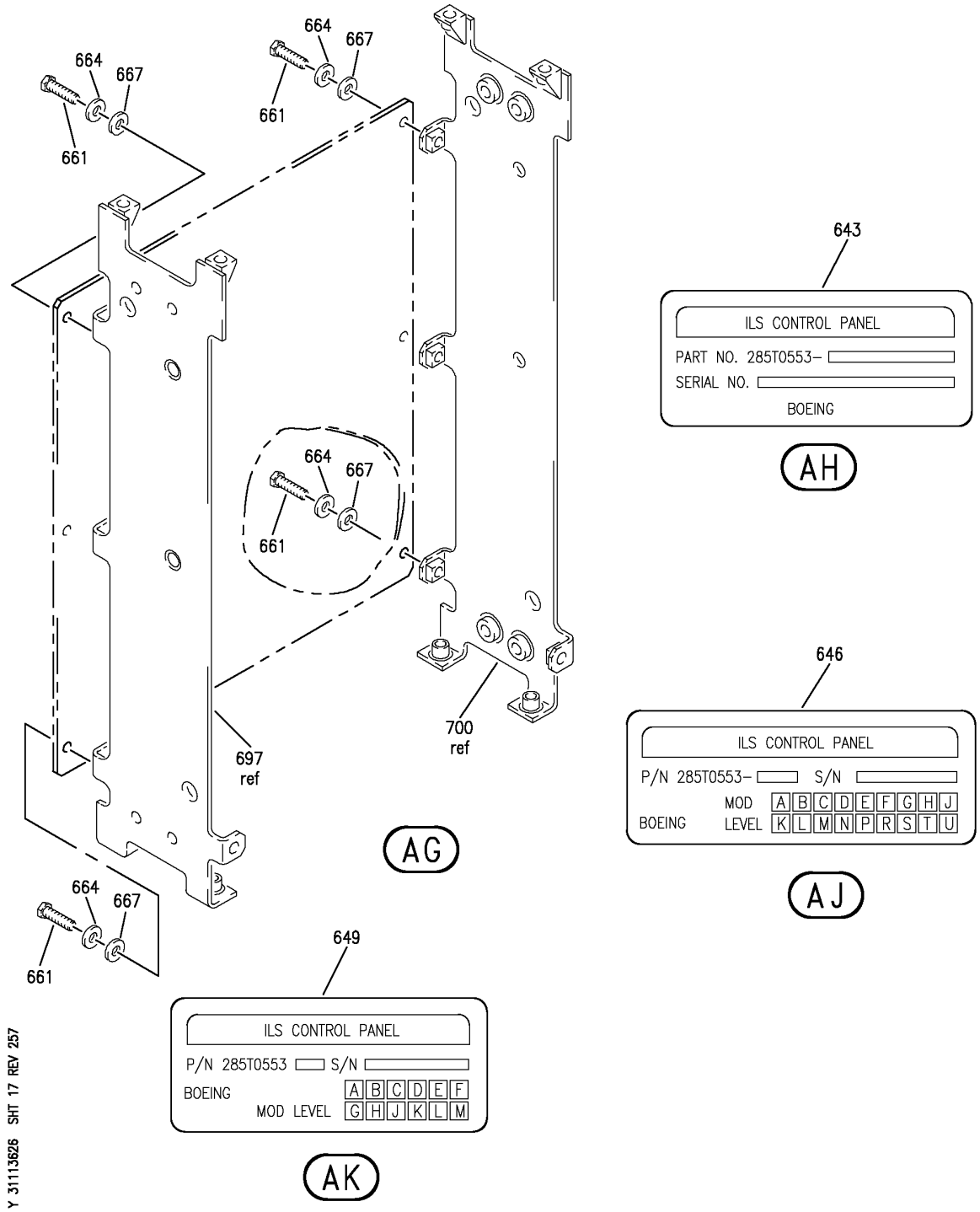

PANEL INSTL-P8 ELECTRONICS (CONTROL STAND AFT ELECTRONIC PANEL ONLY)
FIGURE 26 (SHEET 17)

BOEING PROPRIETARY - Copyright © - Unpublished Work - See title page for details.

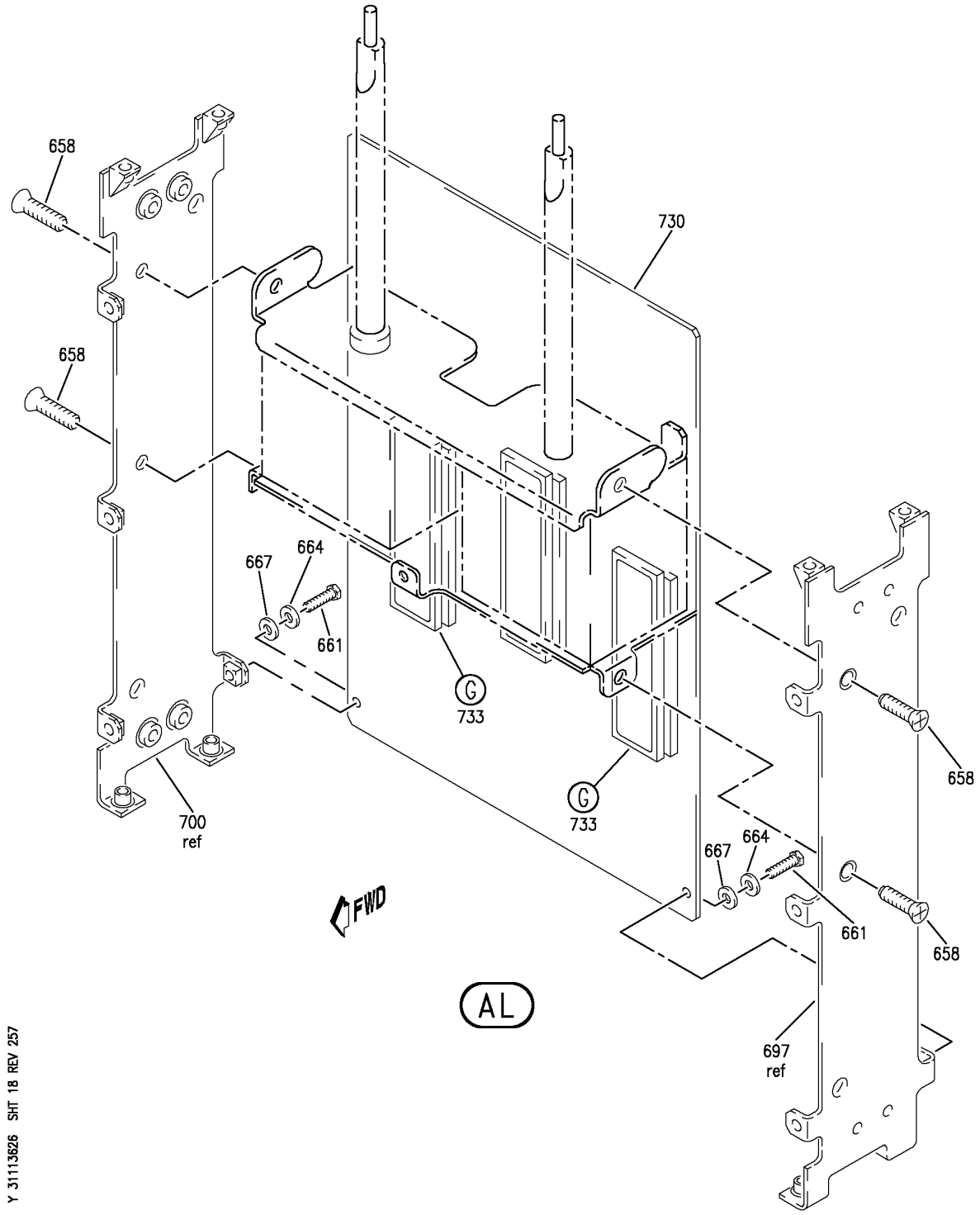

PANEL INSTL-P8 ELECTRONICS (CONTROL STAND AFT ELECTRONIC PANEL ONLY)
FIGURE 26 (SHEET 18)

BOEING PROPRIETARY - Copyright © - Unpublished Work - See title page for details.

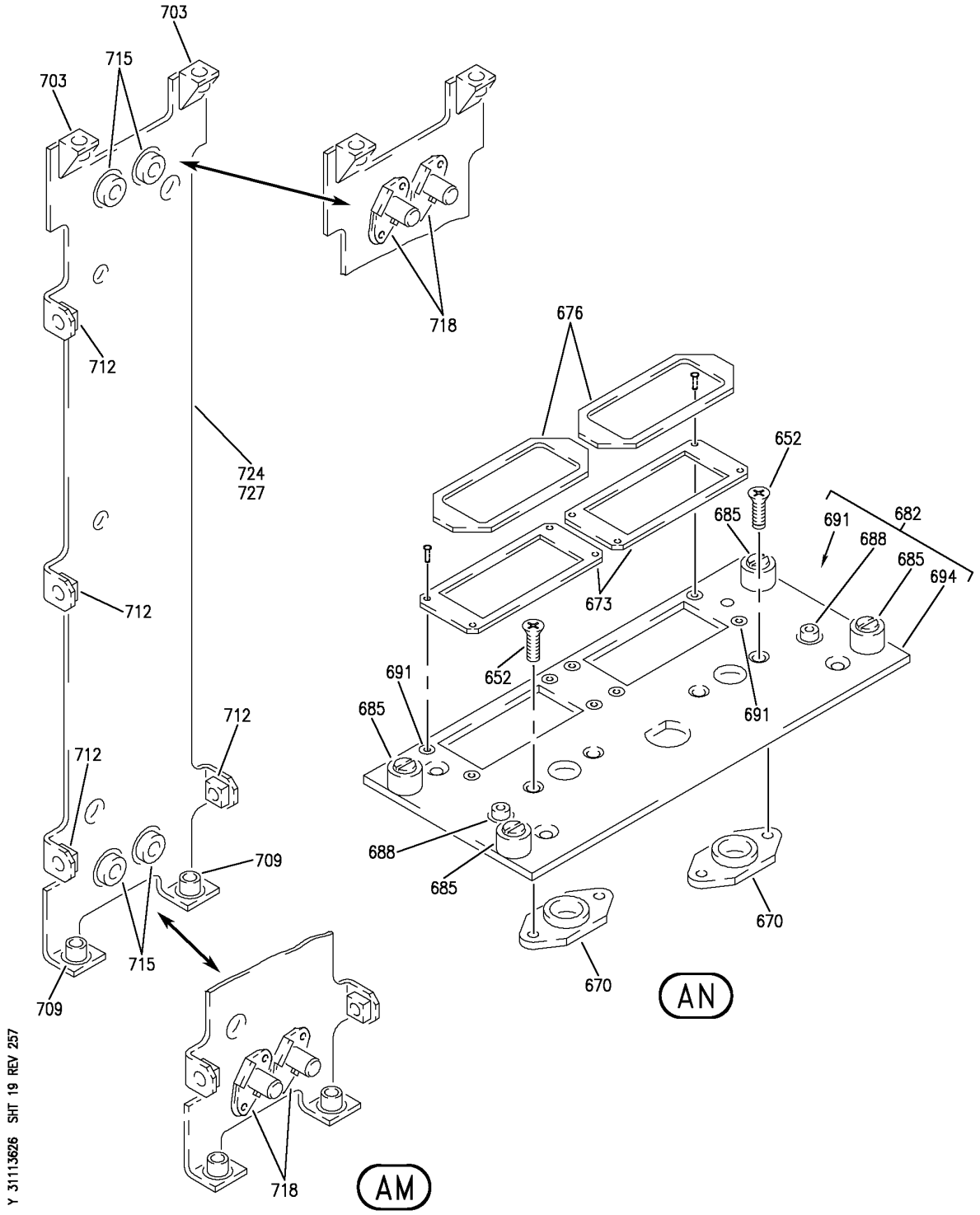

PANEL INSTL-P8 ELECTRONICS (CONTROL STAND AFT ELECTRONIC PANEL ONLY)
FIGURE 26 (SHEET 19)

BOEING PROPRIETARY - Copyright © - Unpublished Work - See title page for details.

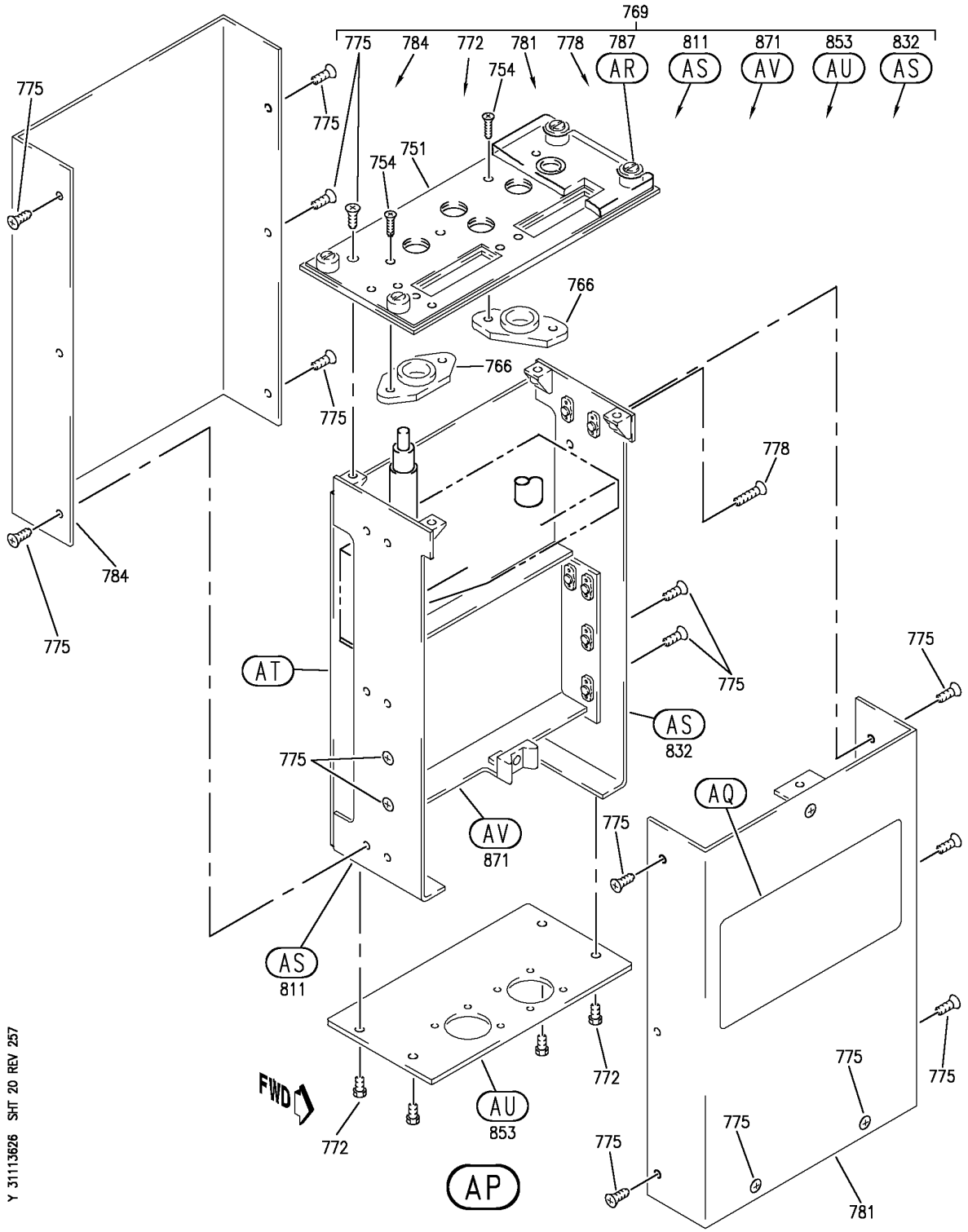

PANEL INSTL-P8 ELECTRONICS (CONTROL STAND AFT ELECTRONIC PANEL ONLY)
FIGURE 26 (SHEET 20)

BOEING PROPRIETARY - Copyright © - Unpublished Work - See title page for details.

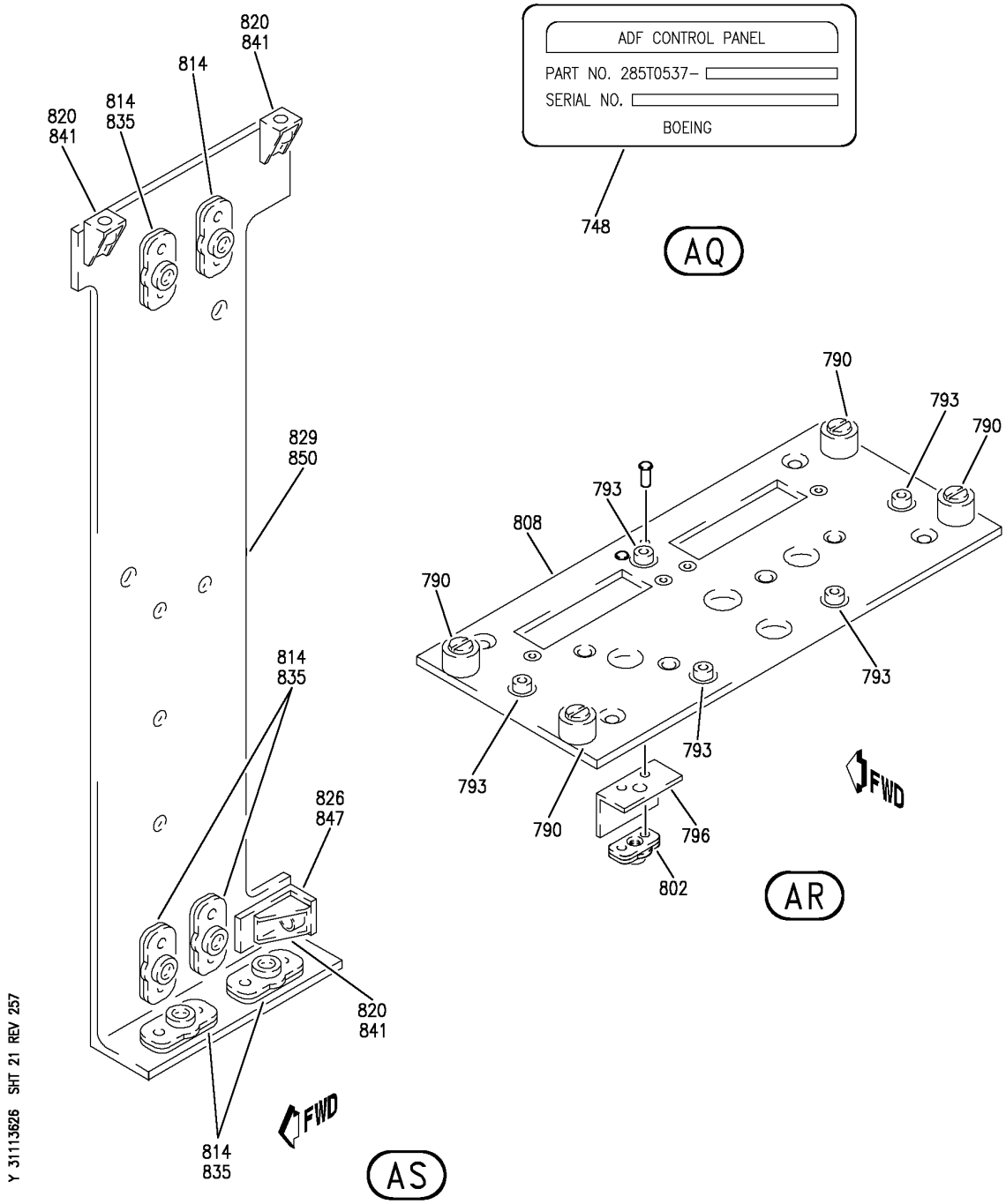

PANEL INSTL-P8 ELECTRONICS (CONTROL STAND AFT ELECTRONIC PANEL ONLY)
FIGURE 26 (SHEET 21)

BOEING PROPRIETARY - Copyright © - Unpublished Work - See title page for details.

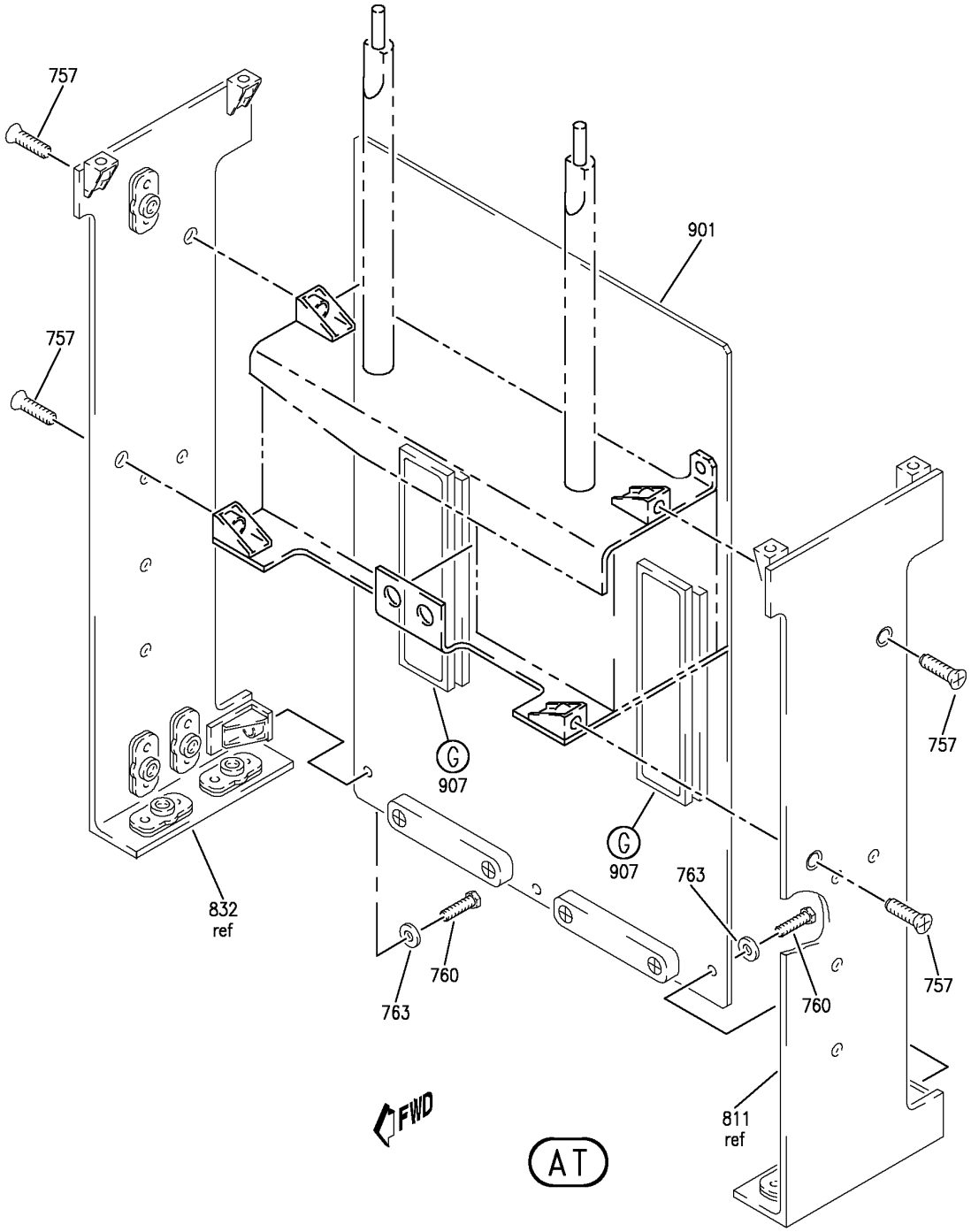

PANEL INSTL-P8 ELECTRONICS (CONTROL STAND AFT ELECTRONIC PANEL ONLY)
FIGURE 26 (SHEET 22)

BOEING PROPRIETARY - Copyright © - Unpublished Work - See title page for details.

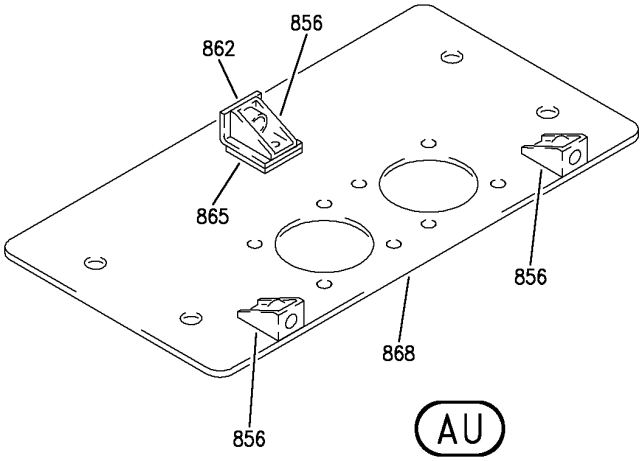

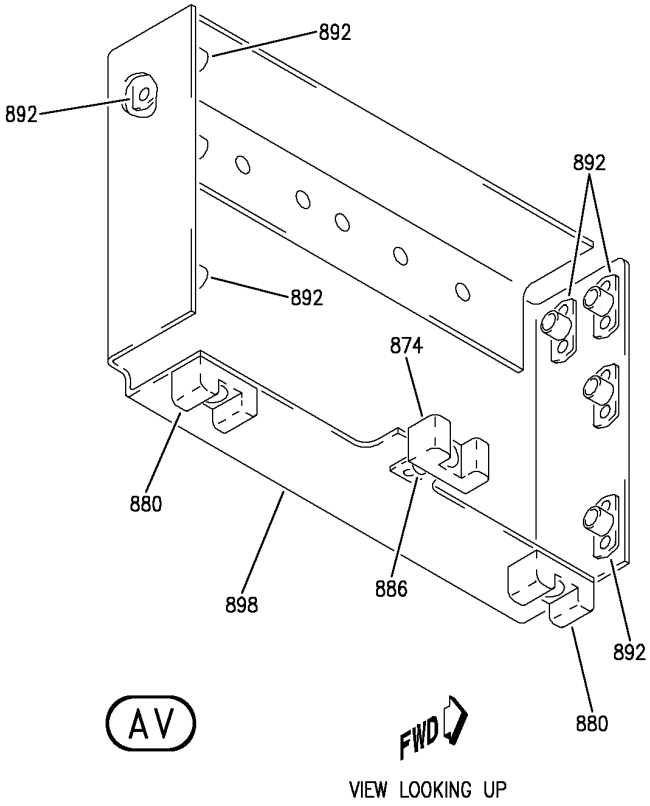

Y 31113626 SHT 23 REV 257

PANEL INSTL-P8 ELECTRONICS (CONTROL STAND AFT ELECTRONIC PANEL ONLY)
FIGURE 26 (SHEET 23)

BOEING PROPRIETARY - Copyright © - Unpublished Work - See title page for details.

FIG ITEM	PART NUMBER	1 2 3 4 5 6 7 NOMENCLATURE	EFFECT FROM TO	UNITS PER ASSY
26				
		PANEL INSTL-P8 ELECTRONICS (CONTROL STAND AFT ELECTRONIC PANEL ONLY)	002004 006100	
- 1	233N6101-1	PANEL INSTL-P8 ELECTRONICS (CONTROL STAND AFT ELECTRONIC PANEL ONLY) VARIABLE DRAWING REF: 233N6101-5042 FOR NHA/OTHER SYS DET SEE: 25-10-00-05A	002004 006100	RF
5	2041223-0402	.PANEL-WEATHER RDR CONT (CUSTOMER FURNISHED) SUPPLIER CODE: V97896 SPECIFICATION NUMBER: S220T109-401 ELECTRICAL EQUIP NUMBER: M00075 COMPONENT MAINT MANUAL REF: 34-41-12 PRE SERVICE BULLETIN: 34-0394R1 FOR BREAKDOWN SEE: 34-43-02-01	002004 006100	RF
5	2041223-0418	.PANEL-WEATHER RDR CONT SUPPLIER CODE: V97896 ELECTRICAL EQUIP NUMBER: M00075 COMPONENT MAINT MANUAL REF: 34-41-12 POST SERVICE BULLETIN: 34-0394R1 FOR BREAKDOWN SEE: 34-43-02-01	009009	RF

MISSING ITEM NUMBERS NOT APPLICABLE

- ITEM NOT ILLUSTRATED

BOEING PROPRIETARY - Copyright © - Unpublished Work - See title page for details.

	FIG ITEM	PART NUMBER	1 2 3 4 5 6 7 NOMENCLATURE	EFFECT FROM TO	UNITS PER ASSY
	26				
R	10	233N6205-12	.PANEL ASSY-ENG FIRE CONT	002004	1
R			SUPPLIER CODE:	006100	
R			V89954		
R			ELECTRICAL EQUIP NUMBER:		
R			M10443		
R			COMPONENT MAINT MANUAL REF:		
R			26-15-41		
R			QUALIFIED I/W DATA:		
R			233N6205-12 MAY REPLACE		
R			BUT MAY NOT BE REPLACED		
R			BY 233N6205-8 OR		
R			233N6205-6 OR 233N6205-1		
R			IN ACCORDANCE WITH		
R			SERVICE BULLETIN		
R			757-26-0023 FOR 757		
R			AIRCRAFTS ONLY.		
R			FOR OTHER SYS DETAILS SEE:		
R			26-11-54-01		
R			26-21-01-01		
	12	NAS1801-06-5	..SCREW	002004	3
				006100	
	14	233N3250-61	..BRACKET-SPRT	002004	1
				006100	
	15	233N6205-16	..BRACKET ASSY-	002004	1
			SUPPLIER CODE:	006100	
			V89954		
			ATTACHING PARTS		
-	20	NAS1801-04-4	..SCREW	002004	6
				006100	
			-------*-------		
	25	BACG20ZA0208	...GROMMET	002004	2
				006100	
	30	NAS514P632-5	..SCREW	002004	3
				006100	
	35	69B46200-29	..STANDOFF	002004	1
				006100	
	40	233N6205-17	..STANDOFF-	002004	2
			SUPPLIER CODE:	006100	
			V89954		
	45	233N6205-13	..BASEPLATE ASSY-	002004	1
			SUPPLIER CODE:	006100	
			V89954		
	50	SF6GXBAS8D	...PIN-	002004	2
			SUPPLIER CODE:	006100	
			V12324		

MISSING ITEM NUMBERS NOT APPLICABLE

- ITEM NOT ILLUSTRATED

BOEING PROPRIETARY - Copyright © - Unpublished Work - See title page for details.

FIG ITEM	PART NUMBER	1 2 3 4 5 6 7 NOMENCLATURE	EFFECT FROM TO	UNITS PER ASSY
26				
55	233N6203-103	.PANEL ASSY-APU/CARGO FIRE CONT SUPPLIER CODE: V89954 ELECTRICAL EQUIP NUMBER: M10444 COMPONENT MAINT MANUAL REF: 26-15-51 QUALIFIED I/W DATA: 233N6203-9 -23 -45 -103 -104 -105 ARE ALL I/W EXCEPT SUBJECT TO CUSTOMER PREFERENCE PRE ALERT SB: 33A0044 FOR OTHER SYS DETAILS SEE: 26-22-03-02 26-23-52-02 33-13-58-01	002004 006010	1
55	233N6203-161	.PANEL ASSY-APU/CARGO FIRE CONT SUPPLIER CODE: V89954 ELECTRICAL EQUIP NUMBER: M10444 COMPONENT MAINT MANUAL REF: 26-15-51 QUALIFIED I/W DATA: THE 233N6203-301 PANEL ASSY IS I/W THE 233N6203-161 PANEL ASSY T/W THE S233T100-573 LIGHTPLATE. 233N6203-9/-23/-45/-104/-105/-161 ARE ALL INTERCHANGEABLE EXCEPT SUBJECT TO CUSTOMER PREFERENCE PRE ALERT SB: 33A0044 FOR OTHER SYS DETAILS SEE: 26-22-03-02 26-23-52-02 33-13-58-01	002004 006010	1

MISSING ITEM NUMBERS NOT APPLICABLE

– ITEM NOT ILLUSTRATED

BOEING PROPRIETARY - Copyright © - Unpublished Work - See title page for details.

FIG ITEM	PART NUMBER	1 2 3 4 5 6 7 NOMENCLATURE	EFFECT FROM TO	UNITS PER ASSY
26				
55	233N6203-1103	.PANEL ASSY-APU/CARGO FIRE CONT SUPPLIER CODE: V89954 ELECTRICAL EQUIP NUMBER: M10444 COMPONENT MAINT MANUAL REF: 26-15-51 POST ALERT SB: 33A0044 FOR OTHER SYS DETAILS SEE: 26-22-03-02, 26-23-52-02, 33-13-58-01	002004 006010	1
55	233N6203-1161	.PANEL ASSY-APU/CARGO FIRE CONT SUPPLIER CODE: V89954 ELECTRICAL EQUIP NUMBER: M10444 COMPONENT MAINT MANUAL REF: 26-15-51 POST ALERT SB: 33A0044 FOR OTHER SYS DETAILS SEE: 26-22-03-02, 26-23-52-02, 33-13-58-01	002004 006010	1
58	NAS1801-06-5	..SCREW	002004 006010	4
62	MS35338-41	..WASHER	002004 006010	4
65	233N6203-2	..BASEPLATE ASSY- SUPPLIER CODE: V89954 ATTACHING PARTS	002004 006010	1
- 70	NAS514P632-5	..SCREW -------*-------	002004 006010	4
75	SF6G6CBB5D	...NUT SUPPLIER CODE: V12324 SPECIFICATION NUMBER: BACN10PA06-6	002004 006010	3
80	PFSC35-38ASEMB	...STUD ASSY- SUPPLIER CODE: V72794 SPECIFICATION NUMBER: BACS21DX1B	002004 006010	4

MISSING ITEM NUMBERS NOT APPLICABLE

- ITEM NOT ILLUSTRATED

BOEING PROPRIETARY - Copyright © - Unpublished Work - See title page for details.

FIG ITEM	PART NUMBER	1 2 3 4 5 6 7 NOMENCLATURE	EFFECT FROM TO	UNITS PER ASSY
26				
85	233N6203-3	...BASEPLATE- SUPPLIER CODE: V89954	002004 006010	1
90	69B46200-15	..STANDOFF	002004 006010	4
92	233N6203-6	..BRACKET ASSY- SUPPLIER CODE: V89954	002004 006010	RF
95	233N6203-301	.PANEL ASSY-APU/CARGO FIRE CONT SUPPLIER CODE: V89954 COMPONENT MAINT MANUAL REF: 26-15-51 PRE ALERT SB: 33A0044 FOR OTHER SYS DETAILS SEE: 26-22-03-01 26-23-52-04 33-13-58-02	011100	1
95	233N6203-355	.PANEL ASSY-APU/CARGO FIRE CONT SUPPLIER CODE: V89954 FOR OTHER SYS DETAILS SEE: 26-22-03-01 26-23-52-04 33-13-58-02	002004 006100	1
95	233N6203-1301	.PANEL ASSY-APU/CARGO FIRE CONT SUPPLIER CODE: V89954 COMPONENT MAINT MANUAL REF: 26-15-51 POST ALERT SB: 33A0044 FOR OTHER SYS DETAILS SEE: 26-22-03-01 26-23-52-04 33-13-58-02	002004 006100	1

MISSING ITEM NUMBERS NOT APPLICABLE

– ITEM NOT ILLUSTRATED

BOEING PROPRIETARY - Copyright © - Unpublished Work - See title page for details.

FIG ITEM	PART NUMBER	1 2 3 4 5 6 7 NOMENCLATURE	EFFECT FROM TO	UNITS PER ASSY
26				
- 100	233N6203-161	..PANEL ASSY- SUPPLIER CODE: V89954 ELECTRICAL EQUIP NUMBER: M10444 COMPONENT MAINT MANUAL REF: 26-15-51 QUALIFIED I/W DATA: THE 233N6203-301 PANEL ASSY IS I/W THE 233N6203-161 PANEL ASSY T/W THE S233T100-573 LIGHTPLATE. 233N6203-9/-23/-45/-104/-105/-161 ARE ALL INTERCHANGEABLE EXCEPT SUBJECT TO CUSTOMER PREFERENCE USED ON: 233N6203-301 PRE ALERT SB: 33A0044	011100	RF
- 100	233N6203-252	..PANEL ASSY- SUPPLIER CODE: V89954 ELECTRICAL EQUIP NUMBER: M10444 COMPONENT MAINT MANUAL REF: 26-15-51 USED ON: 233N6203-355	011100	RF
- 100	233N6203-1161	..PANEL ASSY- SUPPLIER CODE: V89954 ELECTRICAL EQUIP NUMBER: M10444 COMPONENT MAINT MANUAL REF: 26-15-51 USED ON: 233N6203-1301 POST ALERT SB: 33A0044	002004 006100	RF
102	NAS1801-06-5	...SCREW- USED ON: 233N6203-161	011100	4

MISSING ITEM NUMBERS NOT APPLICABLE

– ITEM NOT ILLUSTRATED

BOEING PROPRIETARY - Copyright © - Unpublished Work - See title page for details.

FIG ITEM	PART NUMBER	1 2 3 4 5 6 7 NOMENCLATURE	EFFECT FROM TO	UNITS PER ASSY
26				
102	NAS1801-06-5	...SCREW-	011100	4
		OPTIONAL PART:		
		BACS12HN06-5		
		USED ON:		
		233N6203-252		
102	BACS12HN06-5	...SCREW-	011100	4
		OPTIONAL PART:		
		NAS1801-06-5		
		USED ON:		
		233N6203-252		
106	MS35338-41	...WASHER-	011100	4
		USED ON:		
		233N6203-161		
106	BACW10EC06S	...WASHER-	011100	4
		USED ON:		
		233N6203-252		
110	233N6203-2	...BASEPLATE ASSY-	011100	1
		SUPPLIER CODE:		
		V89954		
		ATTACHING PARTS		
- 115	NAS514P632-5	...SCREW-	011100	4
		USED ON:		
		233N6203-161		
- 115	FH6C5TPKL12BN	...SCREW-	011100	4
		SUPPLIER CODE:		
		V12324		
		USED ON:		
		233N6203-252		
		-------*-------		
120	SF6G6CBB5D	....NUT	011100	3
		SUPPLIER CODE:		
		V12324		
		SPECIFICATION NUMBER:		
		BACN10PA06-6		
125	PFSC35-38ASEMB	....STUD ASSY-	011100	4
		SUPPLIER CODE:		
		V72794		
		SPECIFICATION NUMBER:		
		BACS21DX1B		
130	233N6203-3	....BASEPLATE-	011100	1
		SUPPLIER CODE:		
		V89954		
135	69B46200-15	...STANDOFF	011100	4
138	233N6203-6	...BRACKET ASSY-	011100	RF
		SUPPLIER CODE:		
		V89954		

MISSING ITEM NUMBERS NOT APPLICABLE

- ITEM NOT ILLUSTRATED

BOEING PROPRIETARY - Copyright © - Unpublished Work - See title page for details.

FIG ITEM	PART NUMBER	1 2 3 4 5 6 7 NOMENCLATURE	EFFECT FROM TO	UNITS PER ASSY
26				
140	622-6831-002	.PANEL ASSY- VHF CONT (CUSTOMER FURNISHED) SUPPLIER CODE: V4V792 ELECTRICAL EQUIP NUMBER: M00078 M00079 COMPONENT MAINT MANUAL REF: 23-12-73 FOR BREAKDOWN SEE: 23-12-02-01	002004 006100	RF
142	285T0524-6	.PANEL ASSY-ILS CONT SUPPLIER CODE: V89954 ELECTRICAL EQUIP NUMBER: M00087 COMPONENT MAINT MANUAL REF: 34-31-52 FOR OTHER SYS DETAILS SEE: 11-31-05-47 33-13-58-01 33-13-58-02 34-31-02-01	006100	1
144	285T0524-6	.PANEL ASSY-ILS CONT SUPPLIER CODE: V89954 ELECTRICAL EQUIP NUMBER: M00087 COMPONENT MAINT MANUAL REF: 34-31-52 FOR OTHER SYS DETAILS SEE: 11-31-05-47 33-13-58-01 34-31-02-01	002004	1
146	BAC27TEX2825	..MARKER-ALUMINUM FOIL SUPPLIER CODE: V89954	002004 006100	1
148	S233-6	..SEAL- SUPPLIER CODE: V51896 OPTIONAL PART: S233-13 V51896	002004 006100	1

MISSING ITEM NUMBERS NOT APPLICABLE

— ITEM NOT ILLUSTRATED

BOEING PROPRIETARY - Copyright © - Unpublished Work - See title page for details.

FIG ITEM	PART NUMBER	1 2 3 4 5 6 7 NOMENCLATURE	EFFECT FROM TO	UNITS PER ASSY
26				
148	S233-13	..SEAL-	002004	1
		SUPPLIER CODE:	006100	
		V51896		
		OPTIONAL PART:		
		S233-6		
		V51896		
149	MS35206-202	..SCREW	002004	4
			006100	
150	NAS514P440-6P	..SCREW	002004	4
			006100	
151	NAS1801-04-5	..SCREW	002004	2
			006100	
152	AN960-4L	..WASHER	002004	2
			006100	
153	92-1660-40	..NUT	002004	2
		SUPPLIER CODE:	006100	
		V72962		
		SPECIFICATION NUMBER:		
		BACN10DN40		
		OPTIONAL PART:		
		92-1660-440		
		V15653		
154	WCS225-7	..SEAL ASSY-SHAFT	002004	2
		SUPPLIER CODE:	006100	
		V51074		
156	285T0530-1	..ENCLOSURE ASSY-	002004	1
		SUPPLIER CODE:	006100	
		V89954		
		OPTIONAL PART:		
		285T0530-2		
		V89954		
156	285T0530-2	..ENCLOSURE ASSY-	002004	1
		SUPPLIER CODE:	006100	
		V89954		
		OPTIONAL PART:		
		285T0530-1		
		V89954		
157	NAS1801-04-5	...SCREW	002004	4
			006100	
158	NAS514P440-4P	...SCREW	002004	4
			006100	
159	NAS514P440-5P	...SCREW	002004	12
			006100	
160	AN960D4	...WASHER	002004	4
			006100	
162	285T0529-1	...COVER ASSY-SHELL	002004	2
		SUPPLIER CODE:	006100	
		V89954		

MISSING ITEM NUMBERS NOT APPLICABLE

– ITEM NOT ILLUSTRATED

BOEING PROPRIETARY - Copyright © - Unpublished Work - See title page for details.

FIG ITEM	PART NUMBER	1 2 3 4 5 6 7 NOMENCLATURE	EFFECT FROM TO	UNITS PER ASSY
26				
164	285T0528-1	...PANEL ASSY-FRONT SUPPLIER CODE: V89954 USED ON: 285T0530-1	002004 006100	1
164	285T0528-3	...PANEL ASSY-FRONT SUPPLIER CODE: V89954 USED ON: 285T0530-2	002004 006100	1
165	BACS21DD1B	....STUD ASSY SUPPLIER CODE: V08524 SPECIFICATION NUMBER: BACS21DD1B	002004 006100	4
166	SF6G6CBB5D	....NUT SUPPLIER CODE: V12324 SPECIFICATION NUMBER: BACN10PA06-6	002004 006100	4
167	285T0528-2	....PANEL- SUPPLIER CODE: V89954 USED ON: 285T0528-1	002004 006100	1
167	285T0528-4	....PANEL- SUPPLIER CODE: V89954 USED ON: 285T0528-3	002004 006100	1
168	285T0529-3	...PANEL ASSY-SIDE SUPPLIER CODE: V89954	002004 006100	1
170	285T0529-4	...PANEL ASSY-SIDE SUPPLIER CODE: V89954	002004 006100	1

MISSING ITEM NUMBERS NOT APPLICABLE

– ITEM NOT ILLUSTRATED

BOEING PROPRIETARY - Copyright © - Unpublished Work - See title page for details.

FIG ITEM	PART NUMBER	1 2 3 4 5 6 7 NOMENCLATURE	EFFECT FROM TO	UNITS PER ASSY
26				
172	RMF9201M40	....NUTPLATE SUPPLIER CODE: V72962 SPECIFICATION NUMBER: BACN10JN04 OPTIONAL PART: BRFM20A04L V52828 MF1000-04BAC V15653 NS103218-40 V80539 MF53049-04 V15653 T8124S04S V11815 VN252A40L V92215 ATTACHING PARTS	002004 006100	4
- 173	BACR15BA3AD	....RIVET- SIZE DETERMINED ON INSTL. -------*-------	002004 006100	8
174	F22A27M22-40	....NUT-ANCHOR SUPPLIER CODE: V0217B ATTACHING PARTS	002004 006100	4
- 175	BACR15BA2AD	....RIVET- SIZE DETERMINED ON INSTL. -------*-------	002004 006100	8
176	285T0529-5	....PANEL- SUPPLIER CODE: V89954 USED ON: 285T0529-3	002004 006100	1
178	285T0529-6	....PANEL- SUPPLIER CODE: V89954 USED ON: 285T0529-4	002004 006100	1
180	285T0527-1	...PANEL-REAR SUPPLIER CODE: V89954	002004 006100	1
182	285T0525-3	..MODULE ASSY-ELECT. SUPPLIER CODE: V89954	002004 006100	1
- 183	285T0525-4	...MODULE ASSY- SUPPLIER CODE: V89954	002004 006100	1

MISSING ITEM NUMBERS NOT APPLICABLE

- ITEM NOT ILLUSTRATED

BOEING PROPRIETARY - Copyright © - Unpublished Work - See title page for details.

FIG ITEM	PART NUMBER	1 2 3 4 5 6 7 NOMENCLATURE	EFFECT FROM TO	UNITS PER ASSY
26				
184	285T0250-4	....PMD ASSY- SUPPLIER CODE: V89954	002004 006100	3
185	BAC27TEX2007	.....DECAL- OPTIONAL PART: WHB673-1D0X0D5 V85480	002004 006100	1
185	WHB673-1D0X0D5	.....DECAL- SUPPLIER CODE: V85480 OPTIONAL PART: BAC27TEX2007	002004 006100	1
188	285T0020-8	.PANEL ASSY-ILS CONT SUPPLIER CODE: V89954 ELECTRICAL EQUIP NUMBER: M00087 COMPONENT MAINT MANUAL REF: 34-31-51 FOR OTHER SYS DETAILS SEE: 11-31-05-47 33-13-58-01 33-13-58-02 34-31-02-01	006100	1
190	285T0020-8	.PANEL ASSY-ILS CONT SUPPLIER CODE: V89954 ELECTRICAL EQUIP NUMBER: M00087 COMPONENT MAINT MANUAL REF: 34-31-51 FOR OTHER SYS DETAILS SEE: 11-31-05-47 33-13-58-01 34-31-02-01	002004	1
192	BAC27TEX0934	..MARKER-ALUMINUM FOIL SUPPLIER CODE: V89954	002004 006100	1
194	S233-2	..SEAL- SUPPLIER CODE: V51896 OPTIONAL PART: S233-9 V51896	002004 006100	1

MISSING ITEM NUMBERS NOT APPLICABLE

— ITEM NOT ILLUSTRATED

BOEING PROPRIETARY - Copyright © - Unpublished Work - See title page for details.

FIG ITEM	PART NUMBER	1 2 3 4 5 6 7 NOMENCLATURE	EFFECT FROM TO	UNITS PER ASSY
26				
194	S233-9	..SEAL- SUPPLIER CODE: V51896 OPTIONAL PART: S233-2 V51896	002004 006100	1
195	NAS514P440-4P	..SCREW	002004 006100	10
196	NAS514P440-5P	..SCREW	002004 006100	6
198	285T0082-10	..MODULE ASSY-FRONT SUPPLIER CODE: V89954 OPTIONAL PART: 285T0082-14 V89954	002004 006100	1
198	285T0082-14	..MODULE ASSY-FRONT SUPPLIER CODE: V89954 OPTIONAL PART: 285T0082-10 V89954	002004 006100	1
200	MS35206-202	...SCREW	002004 006100	4
202	WCS225-3	...SEAL ASSY- SUPPLIER CODE: V51074 OPTIONAL PART: WCS225-7 V51074	002004 006100	2
202	WCS225-7	...SEAL ASSY- SUPPLIER CODE: V51074 OPTIONAL PART: WCS225-3 V51074	002004 006100	2
204	285T0440-1	...PANEL ASSY- SUPPLIER CODE: V89954 USED ON: 285T0082-10	002004 006100	1
204	285T0440-22	...PANEL ASSY- SUPPLIER CODE: V89954 USED ON: 285T0082-14	002004 006100	1
206	NAS514P440-5P	....SCREW	002004 006100	2

MISSING ITEM NUMBERS NOT APPLICABLE

– ITEM NOT ILLUSTRATED

BOEING PROPRIETARY - Copyright © - Unpublished Work - See title page for details.

FIG ITEM	PART NUMBER	1 2 3 4 5 6 7 NOMENCLATURE	EFFECT FROM TO	UNITS PER ASSY
26				
208	BACS21DD1B	....STUD ASSY SUPPLIER CODE: V08524 SPECIFICATION NUMBER: BACS21DD1B	002004 006100	4
210	92-1660-40	....NUT SUPPLIER CODE: V72962 SPECIFICATION NUMBER: BACN10DN40 OPTIONAL PART: 92-1660-440 V15653	002004 006100	2
212	SF6G6CBB5D	....NUT SUPPLIER CODE: V12324 SPECIFICATION NUMBER: BACN10PA06-6	002004 006100	4
214	285T0440-5	....PANEL- SUPPLIER CODE: V89954 USED ON: 285T0440-1	002004 006100	1
214	285T0440-23	....PANEL- SUPPLIER CODE: V89954 USED ON: 285T0440-22	002004 006100	1
216	285T0438-1	....CHASSIS ASSY-UPR SUPPLIER CODE: V89954	002004 006100	1
218	F22A27M22-40	.....NUT-ANCHOR SUPPLIER CODE: V0217B ATTACHING PARTS	002004 006100	2
- 220	BACR15BA2AD	.....RIVET- SIZE DETERMINED ON INSTL. -------*-------	002004 006100	4
222	285T0439-3	..PANEL-SIDE SUPPLIER CODE: V89954	002004 006100	1
224	285T0439-4	..PANEL-SIDE SUPPLIER CODE: V89954	002004 006100	1
226	285T0081-10	..MODULE ASSY-REAR SUPPLIER CODE: V89954	002004 006100	1
228	NAS514P440-4P	...SCREW	002004 006100	1

MISSING ITEM NUMBERS NOT APPLICABLE

- ITEM NOT ILLUSTRATED

BOEING PROPRIETARY - Copyright © - Unpublished Work - See title page for details.

FIG ITEM	PART NUMBER	1 2 3 4 5 6 7 NOMENCLATURE	EFFECT FROM TO	UNITS PER ASSY
26				
230	NAS514P440-7P	...SCREW	002004 006100	1
232	NAS43DD0-8	...SPACER	002004 006100	1
234	8214B0440HL	...SPACER-THREADED SUPPLIER CODE: V06540	002004 006100	1
236	NAS620-4L	...WASHER	002004 006100	1
238	285T0250-4	...PMD ASSY- SUPPLIER CODE: V89954	002004 006100	3
240	BAC27TEX2007	....DECAL- OPTIONAL PART: WHB673-1D0X0D5 V85480	002004 006100	1
240	WHB673-1D0X0D5	....DECAL- SUPPLIER CODE: V85480 OPTIONAL PART: BAC27TEX2007	002004 006100	1
242	285T0439-1	...CHASSIS ASSY- SUPPLIER CODE: V89954	002004 006100	1
244	NAS1801-04-5	....SCREW	002004 006100	1
246	AN960D4L	....WASHER	002004 006100	3
248	F22A27M22-40	....NUT-ANCHOR SUPPLIER CODE: V0217B ATTACHING PARTS	002004 006100	4
- 250	BACR15BB2AD	....RIVET- SIZE DETERMINED ON INSTL. -------*-------	002004 006100	8
252	285T0439-6	....BRACKET ASSY- SUPPLIER CODE: V89954	002004 006100	1
255	285T0439-2	....SUPPORT ASSY- SUPPLIER CODE: V89954 ATTACHING PARTS	002004 006100	1
- 258	BACR15BA3AD	....RIVET- SIZE DETERMINED ON INSTL. -------*-------	002004 006100	5

MISSING ITEM NUMBERS NOT APPLICABLE

- ITEM NOT ILLUSTRATED

BOEING PROPRIETARY - Copyright © - Unpublished Work - See title page for details.

FIG ITEM	PART NUMBER	1 2 3 4 5 6 7 NOMENCLATURE	EFFECT FROM TO	UNITS PER ASSY
26				
260	RMF9201M40	.....NUTPLATE SUPPLIER CODE: V72962 SPECIFICATION NUMBER: BACN10JN04 OPTIONAL PART: BRFM20A04L V52828 MF1000-04BAC V15653 NS103218-40 V80539 MF53049-04 V15653 T8124S04S V11815 VN252A40L V92215	002004 006100	3
262	T8077S440	.....NUTPLATE SUPPLIER CODE: V11815 SPECIFICATION NUMBER: BACN10JP04B OPTIONAL PART: MK2000-04BAC V15653 NS103198-40 V80539 RMA9207M40 V72962 VN201A1-40L V92215 BRM100A04L V52828 ATTACHING PARTS	002004 006100	1
- 264	BACR15BA3AD	.....RIVET- SIZE DETERMINED ON INSTL. -------*-------	002004 006100	8
267	285T0439-17	.....SUPPORT- SUPPLIER CODE: V89954	002004 006100	1
270	285T0439-5	....CHASSIS- SUPPLIER CODE: V89954	002004 006100	1

MISSING ITEM NUMBERS NOT APPLICABLE

- ITEM NOT ILLUSTRATED

BOEING PROPRIETARY - Copyright © - Unpublished Work - See title page for details.

FIG ITEM	PART NUMBER	1 2 3 4 5 6 7 NOMENCLATURE	EFFECT FROM TO	UNITS PER ASSY
26				
275	285T0022-44	.PANEL ASSY-AUDIO SELECTOR SUPPLIER CODE: V89954 ELECTRICAL EQUIP NUMBER: M00070 M00071 COMPONENT MAINT MANUAL REF: 23-51-54 FOR OTHER SYS DETAILS SEE: 23-51-01-01 33-13-58-01 33-13-58-02	002004 006100	2
275	285T0022-38	.PANEL ASSY-AUDIO SELECTOR SUPPLIER CODE: V89954 ELECTRICAL EQUIP NUMBER: M00070 M00071 COMPONENT MAINT MANUAL REF: 23-51-54 FOR OTHER SYS DETAILS SEE: 23-51-01-01 33-13-58-01 33-13-58-02	002004 006100	2
275	285T0022-28	.PANEL ASSY-AUDIO SELECTOR SUPPLIER CODE: V89954 ELECTRICAL EQUIP NUMBER: M00070 M00071 COMPONENT MAINT MANUAL REF: 23-51-54 FOR OTHER SYS DETAILS SEE: 23-51-01-01 33-13-58-01 33-13-58-02	002004 006100	2
276	BAC27TEX1992	..MARKER-ALUMINUM FOIL QUALIFIED OPTIONAL DATA: BAC27TEX1992 OPT TO BAC27TEX4053 WHEN USED WITH ASSOCIATED PARTS USED ON: 285T0022-40 285T0022-36 285T0022-44 285T0022-38	002004 006100	1

MISSING ITEM NUMBERS NOT APPLICABLE

— ITEM NOT ILLUSTRATED

BOEING PROPRIETARY - Copyright © - Unpublished Work - See title page for details.

FIG ITEM	PART NUMBER	1 2 3 4 5 6 7 NOMENCLATURE	EFFECT FROM TO	UNITS PER ASSY
26				
276	BAC27TEX1992	..MARKER-ALUMINUM FOIL USED ON: 285T0022-30 285T0022-26 285T0022-20 285T0022-28	002004 006100	1
278	BAC27TEX4053	..MARKER-ALUMINUM FOIL SUPPLIER CODE: V89954 QUALIFIED OPTIONAL DATA: BAC27TEX1992 OPT TO BAC27TEX4053 WHEN USED WITH ASSOCIATED PARTS USED ON: 285T0022-40 285T0022-36 285T0022-44 285T0022-38	002004 006100	1
280	NAS514P440-5	..SCREW	002004 006100	12
282	NAS514P440-4	..SCREW	002004 006100	4
285	NAS514P632-5	..SCREW	002004 006100	4
286	BACG20ZA350	..GROMMET- OPTIONAL PART: BACG20ZA000350 USED ON: 285T0022-40 285T0022-44	002004 006100	2
286	BACG20ZA350	..GROMMET- USED ON: 285T0022-36 285T0022-30 285T0022-26 285T0022-20 285T0022-38 285T0022-28	002004 006100	2
286	BACG20ZA000350	..GROMMET- OPTIONAL PART: BACG20ZA350 USED ON: 285T0022-40 285T0022-44	002004 006100	2
288	285T0179-43	..PANEL ASSY-FRONT SUPPLIER CODE: V89954	002004 006100	1

MISSING ITEM NUMBERS NOT APPLICABLE

– ITEM NOT ILLUSTRATED

BOEING PROPRIETARY - Copyright © - Unpublished Work - See title page for details.

FIG ITEM	PART NUMBER	1 2 3 4 5 6 7 NOMENCLATURE	EFFECT FROM TO	UNITS PER ASSY
26				
289	D1400-6A1	...STUD ASSY SUPPLIER CODE: V08524 SPECIFICATION NUMBER: BACS21DD1	002004 006100	4
290	SF6G6CBB5D	...NUT SUPPLIER CODE: V12324 SPECIFICATION NUMBER: BACN10PA06-6	002004 006100	3
291	F19716-06	...NUT-ANCHOR SUPPLIER CODE: V15653 ATTACHING PARTS	002004 006100	4
- 292	BACR15BA2AD	...RIVET- SIZE DETERMINED ON INSTL. -------*-------	002004 006100	8
293	285T0179-45	...SPACER- SUPPLIER CODE: V89954	002004 006100	4
294	285T0179-44	...PANEL- SUPPLIER CODE: V89954	002004 006100	1
296	285T0179-47	..PANEL- SUPPLIER CODE: V89954	002004 006100	2
298	285T0179-48	..CHASSIS ASSY- SUPPLIER CODE: V89954	002004 006100	1
299	F22A27M22-40	...NUT-ANCHOR SUPPLIER CODE: V0217B OPTIONAL PART: A27M88-04 V62554	002004 006100	12
299	A27M88-04	...NUT-ANCHOR SUPPLIER CODE: V62554 OPTIONAL PART: F22A27M22-40 V0217B ATTACHING PARTS	002004 006100	12
- 300	BACR15BA2AD	...RIVET- SIZE DETERMINED ON INSTL. -------*-------	002004 006100	24
302	285T0179-24	...CHASSIS- SUPPLIER CODE: V89954	002004 006100	1

MISSING ITEM NUMBERS NOT APPLICABLE

- ITEM NOT ILLUSTRATED

BOEING PROPRIETARY - Copyright © - Unpublished Work - See title page for details.

FIG ITEM	PART NUMBER	1 2 3 4 5 6 7 NOMENCLATURE	EFFECT FROM TO	UNITS PER ASSY
26				
305	2229346-7	.MANAGEMENT UNIT-ACARS SYS (CUSTOMER FURNISHED) SUPPLIER CODE: V98571 ELECTRICAL EQUIP NUMBER: M10893 COMPONENT MAINT MANUAL REF: 31-60-00 POST RAPID REVISION: RR92034-1 FOR BREAKDOWN SEE: 23-22-02-01	006100	RF
308	2229346-7	.MANAGEMENT UNIT-ACARS SYS (CUSTOMER FURNISHED) SUPPLIER CODE: V98571 ELECTRICAL EQUIP NUMBER: M10893 COMPONENT MAINT MANUAL REF: 31-60-00 POST RAPID REVISION: RR92034-1 FOR BREAKDOWN SEE: 23-22-02-01	002004	RF
310	G6992-12	.PANEL ASSY-DUAL AIR TRAFFIC CONT (CUSTOMER FURNISHED) SUPPLIER CODE: V99837 FUNCTIONAL DESCRIPTION: PROVIDES SELECTION OF A 4-DIGIT REPLY CODE FOR ONE OR TWO ATC/MODE S TRANSPONDER ENABLES TRANSPONDER AND TCAS TO BE SET TO TEST STANDBY TRANSPONDER ONLY FULL TCAS OR TRAFFIC ADVISORY ONLY MODE OF OPERATION ELECTRICAL EQUIP NUMBER: M10140 COMPONENT MAINT MANUAL REF: 34-50-22 FOR BREAKDOWN SEE: 34-53-02-01	006100	RF

MISSING ITEM NUMBERS NOT APPLICABLE

– ITEM NOT ILLUSTRATED

BOEING PROPRIETARY - Copyright © - Unpublished Work - See title page for details.

FIG ITEM	PART NUMBER	1 2 3 4 5 6 7 NOMENCLATURE	EFFECT FROM TO	UNITS PER ASSY
26				
312	G6992-12	.PANEL ASSY-DUAL AIR TRAFFIC CONT (CUSTOMER FURNISHED) SUPPLIER CODE: V99837 FUNCTIONAL DESCRIPTION: PROVIDES SELECTION OF A 4-DIGIT REPLY CODE FOR ONE OR TWO ATC/MODE S TRANSPONDER ENABLES TRANSPONDER AND TCAS TO BE SET TO TEST STANDBY TRANSPONDER ONLY FULL TCAS OR TRAFFIC ADVISORY ONLY MODE OF OPERATION ELECTRICAL EQUIP NUMBER: M10140 COMPONENT MAINT MANUAL REF: 34-50-22 FOR BREAKDOWN SEE: 34-53-02-01	002004	RF
315	285T0557-1	.PANEL ASSY-DUAL ADF CONT SUPPLIER CODE: V89954 ELECTRICAL EQUIP NUMBER: M01046 COMPONENT MAINT MANUAL REF: 34-57-62 FOR OTHER SYS DETAILS SEE: 11-31-05-47 33-13-58-01 33-13-58-02 34-57-02-02	002004 006100	1
316	BAC27TEX3471	..MARKER- SUPPLIER CODE: V89954 QUALIFIED OPTIONAL DATA: BAC27TEX3471 IS OPT TO BAC27TEX4182 WHEN USED WITH ASSOCIATED PARTS	002004 006100	1
318	BAC27TEX4182	..MARKER- SUPPLIER CODE: V89954 QUALIFIED OPTIONAL DATA: BAC27TEX3471 IS OPT TO BAC27TEX4182 WHEN USED WITH ASSOCIATED PARTS	002004 006100	1
320	NAS1801-04-5	..SCREW	002004 006100	12

MISSING ITEM NUMBERS NOT APPLICABLE

– ITEM NOT ILLUSTRATED

BOEING PROPRIETARY - Copyright © - Unpublished Work - See title page for details.

FIG ITEM	PART NUMBER	1 2 3 4 5 6 7 NOMENCLATURE	EFFECT FROM TO	UNITS PER ASSY
26				
323	NAS514P440-4P	..SCREW	002004 006100	4
326	NAS514P440-5P	..SCREW	002004 006100	10
329	MS35206-202	..SCREW	002004 006100	4
332	MS35338-40	..WASHER	002004 006100	8
335	AN960-4L	..WASHER	002004 006100	8
338	WCS225-5	..SEAL ASSY-SHAFT SUPPLIER CODE: V51074 QUALIFIED OPTIONAL DATA: (OPT WCS225-9 WHEN USED WITH ASSOCIATED ITEMS)	002004 006100	2
338	WCS225-9	..SEAL ASSY-SHAFT SUPPLIER CODE: V51074 QUALIFIED OPTIONAL DATA: (OPT WCS225-5 WHEN USED WITH ASSOCIATED ITEMS)	002004 006100	2
341	285T0580-2	..GASKET ASSY-LCD MODULE SUPPLIER CODE: V89954 OPTIONAL PART: 285T0580-1 V89954	002004 006100	2
341	285T0580-1	..GASKET-LCD MODULE SUPPLIER CODE: V89954 OPTIONAL PART: 285T0580-2 V89954	002004 006100	2
344	285T1151-2	..GASKET- SUPPLIER CODE: V89954 QUALIFIED OPTIONAL DATA: 285T1151-1 OPT TO 285T1151-2 WHEN USED WITH ASSOCIATED PARTS	002004 006100	2
344	285T1151-1	..GASKET- SUPPLIER CODE: V89954 QUALIFIED OPTIONAL DATA: 285T1151-1 OPT TO 285T1151-2 WHEN USED WITH ASSOCIATED PARTS	002004 006100	2

MISSING ITEM NUMBERS NOT APPLICABLE

– ITEM NOT ILLUSTRATED

BOEING PROPRIETARY - Copyright © - Unpublished Work - See title page for details.

FIG ITEM	PART NUMBER	1 2 3 4 5 6 7 NOMENCLATURE	EFFECT FROM TO	UNITS PER ASSY
26				
347	285T0549-2	..COVER ASSY- SUPPLIER CODE: V89954	002004 006100	2
350	285T0548-6	..PANEL ASSY-FRONT SUPPLIER CODE: V89954	002004 006100	1
352	BACS21DD1B	...STUD ASSY SUPPLIER CODE: V08524 SPECIFICATION NUMBER: BACS21DD1B	002004 006100	4
354	SF6G6CBB5D	...NUT SUPPLIER CODE: V12324 SPECIFICATION NUMBER: BACN10PA06-6	002004 006100	2
356	U256-1	...NUT-PRESS SUPPLIER CODE: V46384	002004 006100	8
358	285T0548-16	...PANEL- SUPPLIER CODE: V89954	002004 006100	1
360	285T0550-15	..PANEL ASSY-SIDE SUPPLIER CODE: V89954 OPTIONAL PART: 285T0550-3 V89954 285T0550-11 V89954	002004 006100	1
360	285T0550-3	..PANEL ASSY-SIDE SUPPLIER CODE: V89954 OPTIONAL PART: 285T0550-11 V89954 285T0550-15 V89954	002004 006100	1
360	285T0550-11	..PANEL ASSY-SIDE SUPPLIER CODE: V89954 OPTIONAL PART: 285T0550-15 V89954 285T0550-3 V89954	002004 006100	1

MISSING ITEM NUMBERS NOT APPLICABLE

– ITEM NOT ILLUSTRATED

BOEING PROPRIETARY - Copyright © - Unpublished Work - See title page for details.

FIG ITEM	PART NUMBER	1 2 3 4 5 6 7 NOMENCLATURE	EFFECT FROM TO	UNITS PER ASSY
26				
363	285T0550-16	..PANEL ASSY-SIDE SUPPLIER CODE: V89954 OPTIONAL PART: 285T0550-4 V89954 285T0550-12 V89954	002004 006100	1
363	285T0550-4	..PANEL ASSY-SIDE SUPPLIER CODE: V89954 OPTIONAL PART: 285T0550-12 V89954 285T0550-16 V89954	002004 006100	1
363	285T0550-12	..PANEL ASSY-SIDE SUPPLIER CODE: V89954 OPTIONAL PART: 285T0550-4 V89954 285T0550-16 V89954	002004 006100	1
366	F22A27M22-40	...NUT-ANCHOR SUPPLIER CODE: V0217B ATTACHING PARTS	002004 006100	2
- 369	BACR15BA2AD	...RIVET- SIZE DETERMINED ON INSTL. -------*-------	002004 006100	4
372	FE0440EF	...NUT-PRESS SUPPLIER CODE: V46384	002004 006100	2
375	FE0440EF	...NUT-PRESS SUPPLIER CODE: V46384 USED ON: 285T0550-11 285T0550-12 285T0550-15 285T0550-16	002004 006100	4
375	FE0X440	...NUT-PRESS SUPPLIER CODE: V46384 USED ON: 285T0550-3 285T0550-4	002004 006100	4

MISSING ITEM NUMBERS NOT APPLICABLE

- ITEM NOT ILLUSTRATED

BOEING PROPRIETARY - Copyright © - Unpublished Work - See title page for details.

FIG ITEM	PART NUMBER	1 2 3 4 5 6 7 NOMENCLATURE	EFFECT FROM TO	UNITS PER ASSY
26				
378	LAC440-1	...NUT-PRESS SUPPLIER CODE: V46384 USED ON: 285T0550-3 285T0550-4 285T0550-11 285T0550-12	002004 006100	4
381	BACN10XR04	...NUTPLATE- USED ON: 285T0550-15 285T0550-16 ATTACHING PARTS	002004 006100	4
- 384	BACR15BA2AD	...RIVET- SIZE DETERMINED ON INSTL. USED ON: 285T0550-15 285T0550-16 -------*-------	002004 006100	8
387	285T0550-19	...PANEL- SUPPLIER CODE: V89954 USED ON: 285T0550-15	002004 006100	1
387	285T0550-7	...PANEL- SUPPLIER CODE: V89954 USED ON: 285T0550-3 285T0550-11	002004 006100	1
390	285T0550-20	...PANEL- SUPPLIER CODE: V89954 USED ON: 285T0550-16	002004 006100	1
390	285T0550-8	...PANEL- SUPPLIER CODE: V89954 USED ON: 285T0550-4 285T0550-12	002004 006100	1
393	285T0561-1	..MODULE ASSY-ELECT. SUPPLIER CODE: V89954	002004 006100	1
396	285T0569-1	...DEVICE ASSY-PROGRAMMED MEMORY SUPPLIER CODE: V89954	002004 006100	2

MISSING ITEM NUMBERS NOT APPLICABLE

- ITEM NOT ILLUSTRATED

BOEING PROPRIETARY - Copyright © - Unpublished Work - See title page for details.

FIG ITEM	PART NUMBER	1 2 3 4 5 6 7 NOMENCLATURE	EFFECT FROM TO	UNITS PER ASSY
26				
399	BAC27TEX2007	....DECAL- OPTIONAL PART: WHB673-1D0X0D5 V85480	002004 006100	1
399	WHB673-1D0X0D5	....DECAL- SUPPLIER CODE: V85480 OPTIONAL PART: BAC27TEX2007	002004 006100	1
402	285T0546-3	..PANEL-REAR SUPPLIER CODE: V89954	002004 006100	1
410	BACP10U0262T	.PANEL	006100	1
412	BACP10U0262T	.PANEL	002004	1
415	BACP10U0037T	.PANEL ASSY	006100	1
418	BACP10U0037T	.PANEL ASSY	002004	1
420	233N6204-301	.PANEL ASSY-FIRE/OVERHEAT TEST SUPPLIER CODE: V89954 COMPONENT MAINT MANUAL REF: 26-11-52 QUALIFIED I/W DATA: THE 233N6204-301 PANEL ASSY IS I/W THE 233N6204-15 PANEL ASSY T/W THE S233T100-5508 LIGHTPLATE. FOR OTHER SYS DETAILS SEE: 26-11-02-03 26-12-51-02 26-17-51-04 33-13-58-02	011100	1
- 425	233N6204-15	..PANEL ASSY- SUPPLIER CODE: V89954 ELECTRICAL EQUIP NUMBER: M10445 COMPONENT MAINT MANUAL REF: 26-11-52 QUALIFIED I/W DATA: THE 233N6204-301 PANEL ASSY IS I/W THE 233N6204-15 PANEL ASSY T/W THE S233T100-5508 LIGHTPLATE.	011100	RF
430	233N6204-11	...BASEPLATE ASSY- SUPPLIER CODE: V89954	011100	1

MISSING ITEM NUMBERS NOT APPLICABLE

- ITEM NOT ILLUSTRATED

BOEING PROPRIETARY - Copyright © - Unpublished Work - See title page for details.

FIG ITEM	PART NUMBER	1 2 3 4 5 6 7 NOMENCLATURE	EFFECT FROM TO	UNITS PER ASSY
26				
		ATTACHING PARTS		
- 435	NAS514P632-5	...SCREW	011100	3
		-------*-------		
440	PFSC35-38ASEMB	....STUD ASSY	011100	4
		SUPPLIER CODE: V72794		
		SPECIFICATION NUMBER: BACS21DX1B		
445	SF6G6CBB5D	....NUT	011100	2
		SUPPLIER CODE: V12324		
		SPECIFICATION NUMBER: BACN10PA06-6		
450	233N6204-12	....BASEPLATE-	011100	1
		SUPPLIER CODE: V89954		
455	NAS1801-06-5	...SCREW-	011100	3
		OPTIONAL PART: BACS12HN06-5		
455	BACS12HN06-5	...SCREW-	011100	3
		OPTIONAL PART: NAS1801-06-5		
460	MS35338-41	...WASHER-	011100	3
		OPTIONAL PART: BACW10EC06S		
460	BACW10EC06S	...WASHER-	011100	3
		OPTIONAL PART: MS35338-41		
465	233N3250-40	...BRACKET-SPRT	011100	1
470	69B46200-14	...STANDOFF	011100	3

MISSING ITEM NUMBERS NOT APPLICABLE

- ITEM NOT ILLUSTRATED

BOEING PROPRIETARY - Copyright © - Unpublished Work - See title page for details.

FIG ITEM	PART NUMBER	1 2 3 4 5 6 7 NOMENCLATURE	EFFECT FROM TO	UNITS PER ASSY
26				
475	233N6204-15	.PANEL ASSY-FIRE/OVERHEAT TEST SUPPLIER CODE: V89954 ELECTRICAL EQUIP NUMBER: M10445 COMPONENT MAINT MANUAL REF: 26-11-52 QUALIFIED I/W DATA: 233N6204-13 -14 -15 -17 ARE ALL INTERCHANGEABLE EXCEPT SUBJECT TO CUSTOMER PREFERENCE THE 233N6204-301 PANEL ASSY IS I/W THE 233N6204-15 PANEL ASSY T/W THE S233T100-5508 LIGHTPLATE. FOR OTHER SYS DETAILS SEE: 26-11-02-02 26-12-51-01 26-17-51-03 33-13-58-01	002004 006010	1
480	233N6204-11	..BASEPLATE ASSY- SUPPLIER CODE: V89954 ATTACHING PARTS	002004 006010	1
- 485	NAS514P632-5	..SCREW -------*-------	002004 006010	3
490	PFSC35-38ASEMB	...STUD ASSY SUPPLIER CODE: V72794 SPECIFICATION NUMBER: BACS21DX1B	002004 006010	4
495	SF6G6CBB5D	...NUT SUPPLIER CODE: V12324 SPECIFICATION NUMBER: BACN10PA06-6	002004 006010	2
500	233N6204-12	...BASEPLATE- SUPPLIER CODE: V89954	002004 006010	1
505	NAS1801-06-5	..SCREW- OPTIONAL PART: BACS12HN06-5	002004 006010	3
505	BACS12HN06-5	..SCREW- OPTIONAL PART: NAS1801-06-5	002004 006010	3

MISSING ITEM NUMBERS NOT APPLICABLE

- ITEM NOT ILLUSTRATED

BOEING PROPRIETARY - Copyright © - Unpublished Work - See title page for details.

	FIG ITEM	PART NUMBER	1 2 3 4 5 6 7 NOMENCLATURE	EFFECT FROM TO	UNITS PER ASSY
	26				
	510	MS35338-41	..WASHER-	002004	3
			OPTIONAL PART:	006010	
			BACW10EC06S		
	510	BACW10EC06S	..WASHER-	002004	3
			OPTIONAL PART:	006010	
			MS35338-41		
	515	233N3250-40	..BRACKET-SPRT	002004	1
				006010	
	520	69B46200-14	..STANDOFF	002004	3
				006010	
	525	233T6201-301	.PANEL ASSY-AIL. RUD	011017	1
			TRIM CONT		
			SUPPLIER CODE:		
			V89954		
			COMPONENT MAINT MANUAL REF:		
			27-21-63		
			FOR OTHER SYS DETAILS SEE:		
			27-11-23-02		
			27-21-23-02		
			33-13-58-02		
R	525	233T6201-324	.PANEL ASSY-AIL. RUD	011100	1
R			TRIM CONT		
R			SUPPLIER CODE:		
R			V89954		
R			FUNCTIONAL DESCRIPTION:		
R			CONTROLS AILERON RUDDER		
R			TRIM AND DISPLAYS TRIM		
R			ANGLE.		
R			COMPONENT MAINT MANUAL REF:		
R			27-21-63		
R			QUALIFIED I/W DATA:		
R			THE 233T6201-324 PANEL		
R			ASSY IS I/W THE		
R			233T6201-21 PANEL ASSY		
R			T/W THE S233T100-528		
R			LIGHTPLATE AND SA808-101		
R			KNOB		
R			FOR OTHER SYS DETAILS SEE:		
R			27-11-23-02		
R			27-21-23-02		
R			33-13-58-02		

MISSING ITEM NUMBERS NOT APPLICABLE

– ITEM NOT ILLUSTRATED

BOEING PROPRIETARY - Copyright © - Unpublished Work - See title page for details.

FIG ITEM	PART NUMBER	1 2 3 4 5 6 7 NOMENCLATURE	EFFECT FROM TO	UNITS PER ASSY
26				
- 530	233T6201-21	..PANEL ASSY- SUPPLIER CODE: V89954 ELECTRICAL EQUIP NUMBER: M00074 COMPONENT MAINT MANUAL REF: 27-21-63 QUALIFIED I/W DATA: THE 233T6201-324 PANEL ASSY IS I/W THE 233T6201-21 PANEL ASSY T/W THE S233T100-528 LIGHTPLATE AND SA808-101 KNOB	011100	RF
- 530	233T6201-22	..PANEL ASSY- SUPPLIER CODE: V89954 ELECTRICAL EQUIP NUMBER: M00074	011100	RF
535	233T6200-38	...BRACKET-SPRT ATTACHING PARTS	011100	1
- 540	NAS1801-06-5	...SCREW	011100	3
- 545	MS35338-41	...WASHER -------*-------	011100	3
550	NAS514P632-5	...SCREW	011100	7
555	69B46200-7	...STANDOFF	011100	3
560	233T6201-20	...SHROUD ASSY- SUPPLIER CODE: V89954	011100	1
562	MF6001-06	....NUTPLATE SUPPLIER CODE: V15653 SPECIFICATION NUMBER: BACN10KJ06CM ATTACHING PARTS	011100	4
- 564	BACR15BA3AD	....RIVET- SIZE DETERMINED ON INSTL. -------*-------	011100	8
565	233T6201-15	...BASEPLATE ASSY- SUPPLIER CODE: V89954	011100	1
568	BACS21DD1B	....STUD ASSY SUPPLIER CODE: V08524 SPECIFICATION NUMBER: BACS21DD1B	011100	4

MISSING ITEM NUMBERS NOT APPLICABLE

- ITEM NOT ILLUSTRATED

BOEING PROPRIETARY - Copyright © - Unpublished Work - See title page for details.

FIG ITEM	PART NUMBER	1 2 3 4 5 6 7 NOMENCLATURE	EFFECT FROM TO	UNITS PER ASSY
26				
570	SF6G6CBB5D	....NUT SUPPLIER CODE: V12324 SPECIFICATION NUMBER: BACN10PA06-6	011100	3
572	233T6201-16	....BASEPLATE- SUPPLIER CODE: V89954	011100	1
575	233T6201-21	.PANEL ASSY-AIL. RUD TRIM CONT SUPPLIER CODE: V89954 ELECTRICAL EQUIP NUMBER: M00074 COMPONENT MAINT MANUAL REF: 27-21-63 QUALIFIED I/W DATA: THE 233T6201-324 PANEL ASSY IS I/W THE 233T6201-21 PANEL ASSY T/W THE S233T100-528 LIGHTPLATE AND SA808-101 KNOB 233T6201-19 I/W 233T6201-21 EXCEPT FOR ETOPS WHERE 233T6201-21 MUST BE INSTALLED. FOR OTHER SYS DETAILS SEE: 27-11-23-01 27-21-23-01	002004 006010	1
575	233T6201-22	.PANEL ASSY-AIL. RUD TRIM CONT SUPPLIER CODE: V89954 ELECTRICAL EQUIP NUMBER: M00074 FOR OTHER SYS DETAILS SEE: 27-11-23-01 27-21-23-01	002004 006010	1
580	233T6200-38	..BRACKET-SPRT ATTACHING PARTS	002004 006010	1
- 585	NAS1801-06-5	..SCREW	002004 006010	3
- 590	MS35338-41	..WASHER -------*-------	002004 006010	3
595	NAS514P632-5	..SCREW	002004 006010	7

MISSING ITEM NUMBERS NOT APPLICABLE

- ITEM NOT ILLUSTRATED

BOEING PROPRIETARY - Copyright © - Unpublished Work - See title page for details.

FIG ITEM	PART NUMBER	1 2 3 4 5 6 7 NOMENCLATURE	EFFECT FROM TO	UNITS PER ASSY
26				
600	69B46200-7	..STANDOFF	002004 006010	3
605	233T6201-20	..SHROUD ASSY- SUPPLIER CODE: V89954	002004 006010	1
606	MF6001-06	...NUTPLATE SUPPLIER CODE: V15653 SPECIFICATION NUMBER: BACN10KJ06CM ATTACHING PARTS	002004 006010	4
- 608	BACR15BA3AD	...RIVET- SIZE DETERMINED ON INSTL. -------*-------	002004 006010	8
610	233T6201-15	..BASEPLATE ASSY- SUPPLIER CODE: V89954	002004 006010	1
612	BACS21DD1B	...STUD ASSY SUPPLIER CODE: V08524 SPECIFICATION NUMBER: BACS21DD1B	002004 006010	4
614	SF6G6CBB5D	...NUT SUPPLIER CODE: V12324 SPECIFICATION NUMBER: BACN10PA06-6	002004 006010	3
616	233T6201-16	...BASEPLATE- SUPPLIER CODE: V89954	002004 006010	1
620	362-021-002	.INDICATOR ASSY-RUD TRIM SUPPLIER CODE: V26055 FUNCTIONAL DESCRIPTION: DISPLAYS RUDDER TRIM POSITION AS NOSE LEFT AND RIGHT UNITS SPECIFICATION NUMBER: S231T282-2 ELECTRICAL EQUIP NUMBER: N00083 COMPONENT MAINT MANUAL REF: 27-20-01 FOR BREAKDOWN SEE: 27-28-02-01	002004 006100	RF

MISSING ITEM NUMBERS NOT APPLICABLE

- ITEM NOT ILLUSTRATED

BOEING PROPRIETARY - Copyright © - Unpublished Work - See title page for details.

FIG ITEM	PART NUMBER	1 2 3 4 5 6 7 NOMENCLATURE	EFFECT FROM TO	UNITS PER ASSY
26				
625	2228472-3	.PRINTER-SINGLE PORT (CUSTOMER FURNISHED) SUPPLIER CODE: V98571 ELECTRICAL EQUIP NUMBER: M10386 OPTIONAL PART: 468300-2 V54418 FOR BREAKDOWN SEE: 23-22-51-01	002004 006100	RF
625	468300-2	.PRINTER-SINGLE PORT (CUSTOMER FURNISHED) SUPPLIER CODE: V54418 ELECTRICAL EQUIP NUMBER: M10386 COMPONENT MAINT MANUAL REF: 23-20-02 OPTIONAL PART: 2228472-3 V98571 FOR BREAKDOWN SEE: 23-22-51-01	002004 006100	RF
630	BACP10U0037T	.PANEL ASSY	002004 006100	1
635	285T0553-4	.PANEL ASSY-ILS CONT SUPPLIER CODE: V89954 ELECTRICAL EQUIP NUMBER: M00087 COMPONENT MAINT MANUAL REF: 34-31-61 FOR OTHER SYS DETAILS SEE: 11-31-05-47 33-13-58-01 33-13-58-02 34-31-02-01	006100	1

MISSING ITEM NUMBERS NOT APPLICABLE

– ITEM NOT ILLUSTRATED

BOEING PROPRIETARY - Copyright © - Unpublished Work - See title page for details.

FIG ITEM	PART NUMBER	1 2 3 4 5 6 7 NOMENCLATURE	EFFECT FROM TO	UNITS PER ASSY
26				
635	285T0553-1	.PANEL ASSY-ILS CONT SUPPLIER CODE: V89954 ELECTRICAL EQUIP NUMBER: M00087 COMPONENT MAINT MANUAL REF: 34-31-61 FOR OTHER SYS DETAILS SEE: 11-31-05-47 33-13-58-01 33-13-58-02 34-31-02-01	006100	1
635	285T0553-2	.PANEL ASSY-ILS CONT SUPPLIER CODE: V89954 ELECTRICAL EQUIP NUMBER: M00087 COMPONENT MAINT MANUAL REF: 34-31-61 FOR OTHER SYS DETAILS SEE: 11-31-05-47 33-13-58-01 33-13-58-02 34-31-02-01	006100	1
635	285T0553-3	.PANEL ASSY-ILS CONT SUPPLIER CODE: V89954 ELECTRICAL EQUIP NUMBER: M00087 FOR OTHER SYS DETAILS SEE: 11-31-05-47 33-13-58-01 33-13-58-02 34-31-02-01	006100	1
640	285T0553-4	.PANEL ASSY-ILS CONT SUPPLIER CODE: V89954 ELECTRICAL EQUIP NUMBER: M00087 COMPONENT MAINT MANUAL REF: 34-31-61 FOR OTHER SYS DETAILS SEE: 11-31-05-47 33-13-58-01 34-31-02-01	002004	1

MISSING ITEM NUMBERS NOT APPLICABLE

– ITEM NOT ILLUSTRATED

BOEING PROPRIETARY - Copyright © - Unpublished Work - See title page for details.

FIG ITEM	PART NUMBER	1 2 3 4 5 6 7 NOMENCLATURE	EFFECT FROM TO	UNITS PER ASSY
26				
640	285T0553-1	.PANEL ASSY-ILS CONT SUPPLIER CODE: V89954 ELECTRICAL EQUIP NUMBER: M00087 COMPONENT MAINT MANUAL REF: 34-31-61 FOR OTHER SYS DETAILS SEE: 11-31-05-47 33-13-58-01 34-31-02-01	002004	1
640	285T0553-2	.PANEL ASSY-ILS CONT SUPPLIER CODE: V89954 ELECTRICAL EQUIP NUMBER: M00087 COMPONENT MAINT MANUAL REF: 34-31-61 FOR OTHER SYS DETAILS SEE: 11-31-05-47 33-13-58-01 34-31-02-01	002004	1
640	285T0553-3	.PANEL ASSY-ILS CONT SUPPLIER CODE: V89954 ELECTRICAL EQUIP NUMBER: M00087 FOR OTHER SYS DETAILS SEE: 11-31-05-47 33-13-58-01 34-31-02-01	002004	1
643	BAC27TEX3465	..MARKER-ALUMINUM FOIL SUPPLIER CODE: V89954 QUALIFIED OPTIONAL DATA: BAC27TEX3465 OR BAC27TEX4173 OR BAC27TEX4812 ARE ALL OPT WHEN USED WITH ASSOCIATED PARTS USED ON: 285T0553-4	002004 006100	1
643	BAC27TEX3465	..MARKER-ALUMINUM FOIL SUPPLIER CODE: V89954 USED ON: 285T0553-1 285T0553-2 285T0553-3	002004 006100	1

MISSING ITEM NUMBERS NOT APPLICABLE

– ITEM NOT ILLUSTRATED

BOEING PROPRIETARY - Copyright © - Unpublished Work - See title page for details.

FIG ITEM	PART NUMBER	1 2 3 4 5 6 7 NOMENCLATURE	EFFECT FROM TO	UNITS PER ASSY
26				
646	BAC27TEX4173	..MARKER-ALUMINUM FOIL SUPPLIER CODE: V89954 QUALIFIED OPTIONAL DATA: BAC27TEX3465 OR BAC27TEX4173 OR BAC27TEX4812 ARE ALL OPT WHEN USED WITH ASSOCIATED PARTS USED ON: 285T0553-4	002004 006100	1
649	BAC27TEX4812	..MARKER-ALUMINUM FOIL SUPPLIER CODE: V89954 QUALIFIED OPTIONAL DATA: BAC27TEX3465 OR BAC27TEX4173 OR BAC27TEX4812 ARE ALL OPT WHEN USED WITH ASSOCIATED PARTS USED ON: 285T0553-4	002004 006100	1
652	MS35206-202	..SCREW	002004 006100	4
655	NAS514P440-4P	..SCREW	002004 006100	4
658	NAS514P440-5P	..SCREW	002004 006100	12
661	NAS1801-04-5	..SCREW	002004 006100	12
664	MS35338-40	..WASHER	002004 006100	8
667	AN960-4L	..WASHER	002004 006100	8
670	WCS225-7	..SEAL ASSY-SHAFT SUPPLIER CODE: V51074	002004 006100	2
673	285T0580-1	..GASKET-LCD MODULE SUPPLIER CODE: V89954 QUALIFIED OPTIONAL DATA: 285T0580-1 OPT TO 285T0580-2 WHEN USED WITH ASSOCIATED PARTS USED ON: 285T0553-4	002004 006100	2

MISSING ITEM NUMBERS NOT APPLICABLE

– ITEM NOT ILLUSTRATED

BOEING PROPRIETARY - Copyright © - Unpublished Work - See title page for details.

FIG ITEM	PART NUMBER	1 2 3 4 5 6 7 NOMENCLATURE	EFFECT FROM TO	UNITS PER ASSY
26				
673	285T0580-1	..GASKET-LCD MODULE SUPPLIER CODE: V89954 USED ON: 285T0553-1 285T0553-2 285T0553-3	002004 006100	2
673	285T0580-2	..GASKET ASSY-LCD MODULE SUPPLIER CODE: V89954 QUALIFIED OPTIONAL DATA: 285T0580-1 OPT TO 285T0580-2 WHEN USED WITH ASSOCIATED PARTS USED ON: 285T0553-4	002004 006100	2
676	285T1151-1	..GASKET- SUPPLIER CODE: V89954 QUALIFIED OPTIONAL DATA: 285T1151-1 OPT TO 285T1151-2 WHEN USED WITH ASSOCIATED PARTS USED ON: 285T0553-4	002004 006100	2
676	285T1151-2	..GASKET- SUPPLIER CODE: V89954 QUALIFIED OPTIONAL DATA: 285T1151-1 OPT TO 285T1151-2 WHEN USED WITH ASSOCIATED PARTS USED ON: 285T0553-4	002004 006100	2
679	285T0549-1	..COVER ASSY- SUPPLIER CODE: V89954	002004 006100	2
682	285T0548-1	..PANEL ASSY-FRONT SUPPLIER CODE: V89954	002004 006100	1
685	BACS21DD1B	...STUD ASSY SUPPLIER CODE: V08524 SPECIFICATION NUMBER: BACS21DD1B	002004 006100	4

MISSING ITEM NUMBERS NOT APPLICABLE

– ITEM NOT ILLUSTRATED

BOEING PROPRIETARY - Copyright © - Unpublished Work - See title page for details.

FIG ITEM	PART NUMBER	1 2 3 4 5 6 7 NOMENCLATURE	EFFECT FROM TO	UNITS PER ASSY
26				
688	SF6G6CBB5D	...NUT SUPPLIER CODE: V12324 SPECIFICATION NUMBER: BACN10PA06-6	002004 006100	2
691	U256-1	...NUT-PRESS SUPPLIER CODE: V46384	002004 006100	8
694	285T0548-11	...PANEL- SUPPLIER CODE: V89954	002004 006100	1
697	285T0550-13	..PANEL ASSY-SIDE SUPPLIER CODE: V89954 OPTIONAL PART: 285T0550-1 V89954 285T0550-9 V89954	002004 006100	1
697	285T0550-9	..PANEL ASSY-SIDE SUPPLIER CODE: V89954 OPTIONAL PART: 285T0550-1 V89954 285T0550-13 V89954	002004 006100	1
697	285T0550-1	..PANEL ASSY-SIDE SUPPLIER CODE: V89954 OPTIONAL PART: 285T0550-9 V89954 285T0550-13 V89954	002004 006100	1
700	285T0550-14	..PANEL ASSY-SIDE SUPPLIER CODE: V89954 OPTIONAL PART: 285T0550-2 V89954 285T0550-10 V89954	002004 006100	1

MISSING ITEM NUMBERS NOT APPLICABLE

– ITEM NOT ILLUSTRATED

BOEING PROPRIETARY - Copyright © - Unpublished Work - See title page for details.

FIG ITEM	PART NUMBER	1 2 3 4 5 6 7 NOMENCLATURE	EFFECT FROM TO	UNITS PER ASSY
26				
700	285T0550-10	..PANEL ASSY-SIDE	002004	1
		SUPPLIER CODE:	006100	
		V89954		
		OPTIONAL PART:		
		285T0550-2		
		V89954		
		285T0550-14		
		V89954		
700	285T0550-2	..PANEL ASSY-SIDE	002004	1
		SUPPLIER CODE:	006100	
		V89954		
		OPTIONAL PART:		
		285T0550-10		
		V89954		
		285T0550-14		
		V89954		
703	F22A27M22-40	...NUT-ANCHOR	002004	2
		SUPPLIER CODE:	006100	
		V0217B		
		ATTACHING PARTS		
- 706	BACR15BA2AD	...RIVET-	002004	4
		SIZE DETERMINED ON INSTL.	006100	
		-------*-------		
709	FE0440EF	...NUT-PRESS	002004	2
		SUPPLIER CODE:	006100	
		V46384		
712	FE0440EF	...NUT-PRESS	002004	4
		SUPPLIER CODE:	006100	
		V46384		
		USED ON:		
		285T0550-9		
		285T0550-13		
		285T0550-10		
		285T0550-14		
712	FE0X440	...NUT-PRESS	002004	4
		SUPPLIER CODE:	006100	
		V46384		
		USED ON:		
		285T0550-1		
		285T0550-2		
715	LAC440-1	...NUT-PRESS	002004	4
		SUPPLIER CODE:	006100	
		V46384		
		USED ON:		
		285T0550-1		
		285T0550-9		
		285T0550-2		
		285T0550-10		

MISSING ITEM NUMBERS NOT APPLICABLE

- ITEM NOT ILLUSTRATED

BOEING PROPRIETARY - Copyright © - Unpublished Work - See title page for details.

FIG ITEM	PART NUMBER	1 2 3 4 5 6 7 NOMENCLATURE	EFFECT FROM TO	UNITS PER ASSY
26				
718	BACN10XR04	...NUTPLATE- USED ON: 285T0550-13 285T0550-14 ATTACHING PARTS	002004 006100	4
- 721	BACR15BA2AD	...RIVET- SIZE DETERMINED ON INSTL. -------*-------	002004 006100	8
724	285T0550-17	...PANEL- SUPPLIER CODE: V89954 USED ON: 285T0550-13	002004 006100	1
724	285T0550-5	...PANEL- SUPPLIER CODE: V89954 USED ON: 285T0550-1 285T0550-9	002004 006100	1
727	285T0550-18	...PANEL- SUPPLIER CODE: V89954 USED ON: 285T0550-14	002004 006100	1
727	285T0550-6	...PANEL- SUPPLIER CODE: V89954 USED ON: 285T0550-2 285T0550-10	002004 006100	1
730	285T0558-3	..MODULE ASSY-ELECT. SUPPLIER CODE: V89954 QUALIFIED OPTIONAL DATA: 285T0558-3 OPT TO 285T0558-10 WHEN USED WITH ASSOCIATED PARTS USED ON: 285T0553-4	002004 006100	1
730	285T0558-10	..MODULE ASSY-ELECT. SUPPLIER CODE: V89954 QUALIFIED OPTIONAL DATA: 285T0558-3 OPT TO 285T0558-10 WHEN USED WITH ASSOCIATED PARTS USED ON: 285T0553-4	002004 006100	1

MISSING ITEM NUMBERS NOT APPLICABLE

- ITEM NOT ILLUSTRATED

BOEING PROPRIETARY - Copyright © - Unpublished Work - See title page for details.

FIG ITEM	PART NUMBER	1 2 3 4 5 6 7 NOMENCLATURE	EFFECT FROM TO	UNITS PER ASSY
26				
730	285T0558-1	..MODULE ASSY-ELECT. SUPPLIER CODE: V89954 USED ON: 285T0553-4	002004 006100	1
730	285T0558-2	..MODULE ASSY-ELECT. SUPPLIER CODE: V89954 USED ON: 285T0553-4	002004 006100	1
730	285T0558-1	..MODULE ASSY-ELECT. SUPPLIER CODE: V89954 USED ON: 285T0553-1 285T0553-3	002004 006100	1
730	285T0558-2	..MODULE ASSY-ELECT. SUPPLIER CODE: V89954 QUALIFIED OPTIONAL DATA: 285T0558-2 OPT TO 285T0558-9 WHEN USED WITH ASSOCIATED PARTS USED ON: 285T0553-2	002004 006100	1
730	285T0558-9	..MODULE ASSY-ELECT. SUPPLIER CODE: V89954 QUALIFIED OPTIONAL DATA: 285T0558-2 OPT TO 285T0558-9 WHEN USED WITH ASSOCIATED PARTS USED ON: 285T0553-2	002004 006100	1
730	285T0558-1	..MODULE ASSY-ELECT. SUPPLIER CODE: V89954 USED ON: 285T0553-2	002004 006100	1
733	285T0566-1	...PMD ASSY- SUPPLIER CODE: V89954	002004 006100	3
736	BAC27TEX2007	....DECAL- OPTIONAL PART: WHB673-1-0X0-5 V85480 DAT59-652 V85480	002004 006100	1

MISSING ITEM NUMBERS NOT APPLICABLE

— ITEM NOT ILLUSTRATED

BOEING PROPRIETARY - Copyright © - Unpublished Work - See title page for details.

FIG ITEM	PART NUMBER	1 2 3 4 5 6 7 NOMENCLATURE	EFFECT FROM TO	UNITS PER ASSY
26				
736	WHB673-1-0X0-5	....DECAL- SUPPLIER CODE: V85480 OPTIONAL PART: BAC27TEX2007 DAT59-652 V85480	002004 006100	1
736	DAT59-652	....DECAL- SUPPLIER CODE: V85480 OPTIONAL PART: BAC27TEX2007 WHB673-1-0X0-5 V85480	002004 006100	1
739	285T0546-1	..PANEL-REAR SUPPLIER CODE: V89954	002004 006100	1
745	285T0537-1	.PANEL ASSY-DUAL ADF CONT SUPPLIER CODE: V89954 ELECTRICAL EQUIP NUMBER: M01046 COMPONENT MAINT MANUAL REF: 34-57-53 FOR OTHER SYS DETAILS SEE: 11-31-05-47 33-13-58-01 33-13-58-02 34-57-02-02	002004 006100	1
748	BAC27TEX3153	..MARKER- SUPPLIER CODE: V89954	002004 006100	1
751	S233-14	..SEAL- SUPPLIER CODE: V51896 OPTIONAL PART: S233-7 V51896	002004 006100	1
751	S233-7	..SEAL- SUPPLIER CODE: V51896 OPTIONAL PART: S233-14 V51896	002004 006100	1
754	MS35206-202	..SCREW	002004 006100	4
757	NAS514P440-6P	..SCREW	002004 006100	4

MISSING ITEM NUMBERS NOT APPLICABLE

– ITEM NOT ILLUSTRATED

BOEING PROPRIETARY - Copyright © - Unpublished Work - See title page for details.

FIG ITEM	PART NUMBER	1 2 3 4 5 6 7 NOMENCLATURE	EFFECT FROM TO	UNITS PER ASSY
26				
760	NAS1801-04-6	..SCREW	002004 006100	3
763	AN960-4L	..WASHER	002004 006100	3
766	WCS225-5	..SEAL ASSY-SHAFT SUPPLIER CODE: V51074	002004 006100	2
769	285T0450-4	..ENCLOSURE ASSY- SUPPLIER CODE: V89954 OPTIONAL PART: 285T0450-2 V89954	002004 006100	1
769	285T0450-2	..ENCLOSURE ASSY- SUPPLIER CODE: V89954 OPTIONAL PART: 285T0450-4 V89954	002004 006100	1
772	NAS1801-04-5	...SCREW	002004 006100	4
775	NAS514P440-5P	...SCREW	002004 006100	22
778	NAS514P440-7P	...SCREW	002004 006100	1
781	285T0449-1	...COVER-UPR SUPPLIER CODE: V89954	002004 006100	1
784	285T0449-9	...COVER ASSY-LWR SUPPLIER CODE: V89954	002004 006100	1
787	285T0448-9	...PANEL ASSY-FRONT SUPPLIER CODE: V89954 USED ON: 285T0450-4	002004 006100	1
787	285T0448-4	...PANEL ASSY-FRONT SUPPLIER CODE: V89954 USED ON: 285T0450-2	002004 006100	1
790	BACS21DD1B	....STUD ASSY SUPPLIER CODE: V08524 SPECIFICATION NUMBER: BACS21DD1B	002004 006100	4

MISSING ITEM NUMBERS NOT APPLICABLE

– ITEM NOT ILLUSTRATED

BOEING PROPRIETARY - Copyright © - Unpublished Work - See title page for details.

FIG ITEM	PART NUMBER	1 2 3 4 5 6 7 NOMENCLATURE	EFFECT FROM TO	UNITS PER ASSY
26				
793	SF6G6CBB5D	....NUT SUPPLIER CODE: V12324 SPECIFICATION NUMBER: BACN10PA06-6	002004 006100	5
796	285T0451-1	....CLIP- SUPPLIER CODE: V89954 ATTACHING PARTS	002004 006100	1
- 799	BACR15BA2AD	....RIVET- SIZE DETERMINED ON INSTL. -------*-------	002004 006100	2
802	RMF9201M40	....NUTPLATE SUPPLIER CODE: V72962 SPECIFICATION NUMBER: BACN10JN04 OPTIONAL PART: BRFM20A04L V52828 MF1000-04BAC V15653 NS103218-40 V80539 MF53049-04 V15653 T8124S04S V11815 VN252A40L V92215 ATTACHING PARTS	002004 006100	1
- 805	BACR15BA3AD	....RIVET- SIZE DETERMINED ON INSTL. -------*-------	002004 006100	2
808	285T0448-10	....PANEL- SUPPLIER CODE: V89954 USED ON: 285T0448-9	002004 006100	1
808	285T0448-5	....PANEL- SUPPLIER CODE: V89954 USED ON: 285T0448-4	002004 006100	1
811	285T0449-4	...PANEL ASSY-SIDE SUPPLIER CODE: V89954	002004 006100	1

MISSING ITEM NUMBERS NOT APPLICABLE

- ITEM NOT ILLUSTRATED

BOEING PROPRIETARY - Copyright © - Unpublished Work - See title page for details.

FIG ITEM	PART NUMBER	1 2 3 4 5 6 7 NOMENCLATURE	EFFECT FROM TO	UNITS PER ASSY
26				
814	RMF9201M40	....NUTPLATE SUPPLIER CODE: V72962 SPECIFICATION NUMBER: BACN10JN04 OPTIONAL PART: BRFM20A04L V52828 MF1000-04BAC V15653 NS103218-40 V80539 MF53049-04 V15653 T8124S04S V11815 VN252A40L V92215 ATTACHING PARTS	002004 006100	6
- 817	BACR15BA3AD	....RIVET- SIZE DETERMINED ON INSTL. -------*-------	002004 006100	12
820	F22A27M22-40	....NUT-ANCHOR SUPPLIER CODE: V0217B ATTACHING PARTS	002004 006100	3
- 823	BACR15BA2AD	....RIVET- SIZE DETERMINED ON INSTL. -------*-------	002004 006100	6
826	285T0447-5	....CLIP- SUPPLIER CODE: V89954	002004 006100	1
829	285T0449-8	....PANEL- SUPPLIER CODE: V89954	002004 006100	1
832	285T0449-11	...PANEL ASSY-SIDE SUPPLIER CODE: V89954	002004 006100	1

MISSING ITEM NUMBERS NOT APPLICABLE

- ITEM NOT ILLUSTRATED

BOEING PROPRIETARY - Copyright © - Unpublished Work - See title page for details.

FIG ITEM	PART NUMBER	1 2 3 4 5 6 7 NOMENCLATURE	EFFECT FROM TO	UNITS PER ASSY
26				
835	RMF9201M40	....NUTPLATE SUPPLIER CODE: V72962 SPECIFICATION NUMBER: BACN10JN04 OPTIONAL PART: BRFM20A04L V52828 MF1000-04BAC V15653 NS103218-40 V80539 MF53049-04 V15653 T8124S04S V11815 VN252A40L V92215 ATTACHING PARTS	002004 006100	5
- 838	BACR15BA3AD	....RIVET- SIZE DETERMINED ON INSTL. -------*-------	002004 006100	10
841	F22A27M22-40	....NUT-ANCHOR SUPPLIER CODE: V0217B ATTACHING PARTS	002004 006100	3
- 844	BACR15BA2AD	....RIVET- SIZE DETERMINED ON INSTL. -------*-------	002004 006100	6
847	285T0447-5	....CLIP- SUPPLIER CODE: V89954	002004 006100	1
850	285T0449-12	....PANEL- SUPPLIER CODE: V89954	002004 006100	1
853	285T0447-1	...PANEL ASSY-REAR SUPPLIER CODE: V89954	002004 006100	1
856	F22A27M22-40	....NUT-ANCHOR SUPPLIER CODE: V0217B ATTACHING PARTS	002004 006100	3
- 859	BACR15BB2AD	....RIVET- SIZE DETERMINED ON INSTL. -------*-------	002004 006100	6
862	285T0447-4	....CLIP- SUPPLIER CODE: V89954	002004 006100	1

MISSING ITEM NUMBERS NOT APPLICABLE

- ITEM NOT ILLUSTRATED

BOEING PROPRIETARY - Copyright © - Unpublished Work - See title page for details.

FIG ITEM	PART NUMBER	1 2 3 4 5 6 7 NOMENCLATURE	EFFECT FROM TO	UNITS PER ASSY
26				
865	285T0447-3	....SPACER-	002004	1
		SUPPLIER CODE:	006100	
		V89954		
868	285T0447-2	....PANEL-	002004	1
		SUPPLIER CODE:	006100	
		V89954		
871	285T0446-1	...SUPPORT ASSY-PWR SUPPLY	002004	1
		SUPPLIER CODE:	006100	
		V89954		
874	TC140	....PLATE-MTG	002004	1
		SUPPLIER CODE:	006100	
		V59730		
		SPECIFICATION NUMBER:		
		STBP19M1		
		ATTACHING PARTS		
- 877	NAS600-6P	....SCREW	002004	1
			006100	
		-------*-------		
880	TC140	....PLATE-MTG	002004	2
		SUPPLIER CODE:	006100	
		V59730		
		SPECIFICATION NUMBER:		
		STBP19M1		
		ATTACHING PARTS		
- 883	MS20470A4-6	....RIVET	002004	2
			006100	
		-------*-------		
886	F22A27M22-40	....NUT-ANCHOR	002004	1
		SUPPLIER CODE:	006100	
		V0217B		
		ATTACHING PARTS		
- 889	BACR15BB2AD	....RIVET-	002004	2
		SIZE DETERMINED ON INSTL.	006100	
		-------*-------		

MISSING ITEM NUMBERS NOT APPLICABLE

- ITEM NOT ILLUSTRATED

BOEING PROPRIETARY - Copyright © - Unpublished Work - See title page for details.

FIG ITEM	PART NUMBER	1 2 3 4 5 6 7 NOMENCLATURE	EFFECT FROM TO	UNITS PER ASSY
26				
892	RMF9201M40	....NUTPLATE SUPPLIER CODE: V72962 SPECIFICATION NUMBER: BACN10JN04 OPTIONAL PART: BRFM20A04L V52828 MF1000-04BAC V15653 NS103218-40 V80539 MF53049-04 V15653 T8124S04S V11815 VN252A40L V92215 ATTACHING PARTS	002004 006100	8
- 895	BACR15BA3AD	....RIVET- SIZE DETERMINED ON INSTL. -------*-------	002004 006100	16
898	285T0446-2	....BRACKET-SPRT SUPPLIER CODE: V89954	002004 006100	1
901	285T0445-5	..MODULE ASSY-ELECT. SUPPLIER CODE: V89954	002004 006100	1
- 904	285T0445-6	...MODULE ASSY- SUPPLIER CODE: V89954	002004 006100	RF
907	285T0253-5	....PMD ASSY- SUPPLIER CODE: V89954	002004 006100	2
910	BAC27TEX2007	.....DECAL- OPTIONAL PART: WHB673-10X05 V85480	002004 006100	1
910	WHB673-10X05	.....DECAL- SUPPLIER CODE: V85480 OPTIONAL PART: BAC27TEX2007	002004 006100	1

MISSING ITEM NUMBERS NOT APPLICABLE

- ITEM NOT ILLUSTRATED

BOEING PROPRIETARY - Copyright © - Unpublished Work - See title page for details.

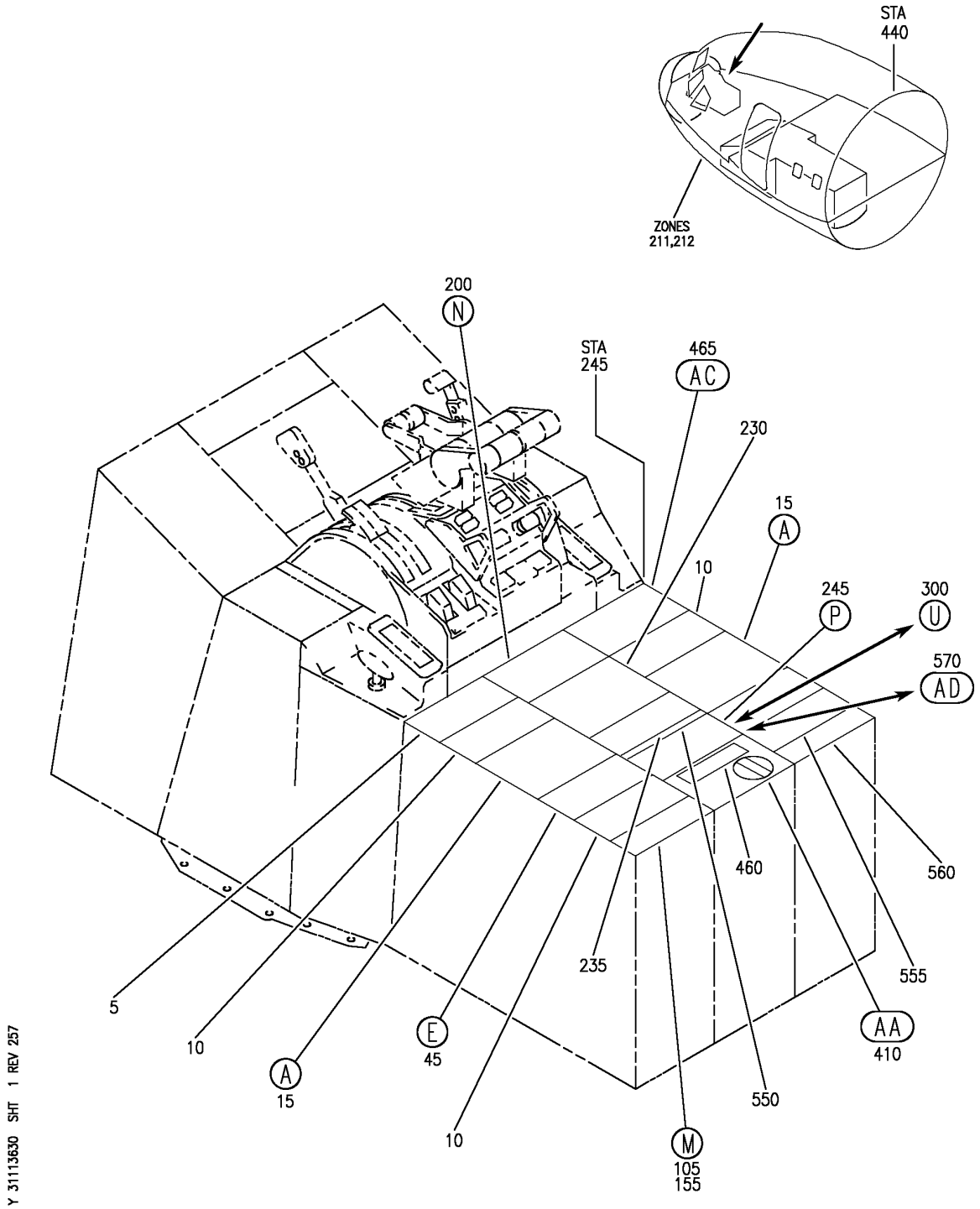

PANEL INSTL-P8 ELECTRONICS (CONTROL STAND AFT ELECTRONIC PANEL ONLY)
FIGURE 30 (SHEET 1)

BOEING PROPRIETARY - Copyright © - Unpublished Work - See title page for details.

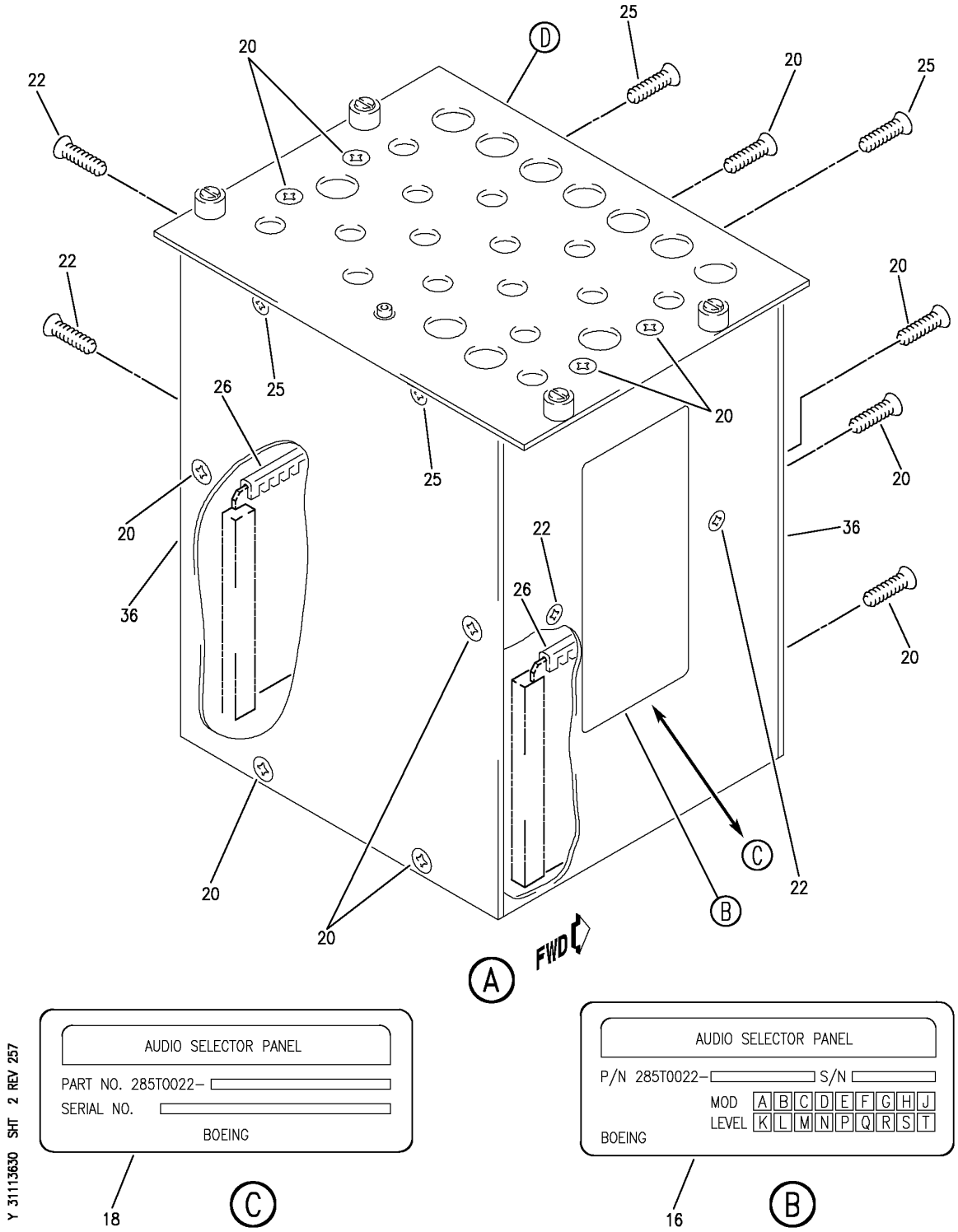

PANEL INSTL-P8 ELECTRONICS (CONTROL STAND AFT ELECTRONIC PANEL ONLY)
FIGURE 30 (SHEET 2)

BOEING PROPRIETARY - Copyright © - Unpublished Work - See title page for details.

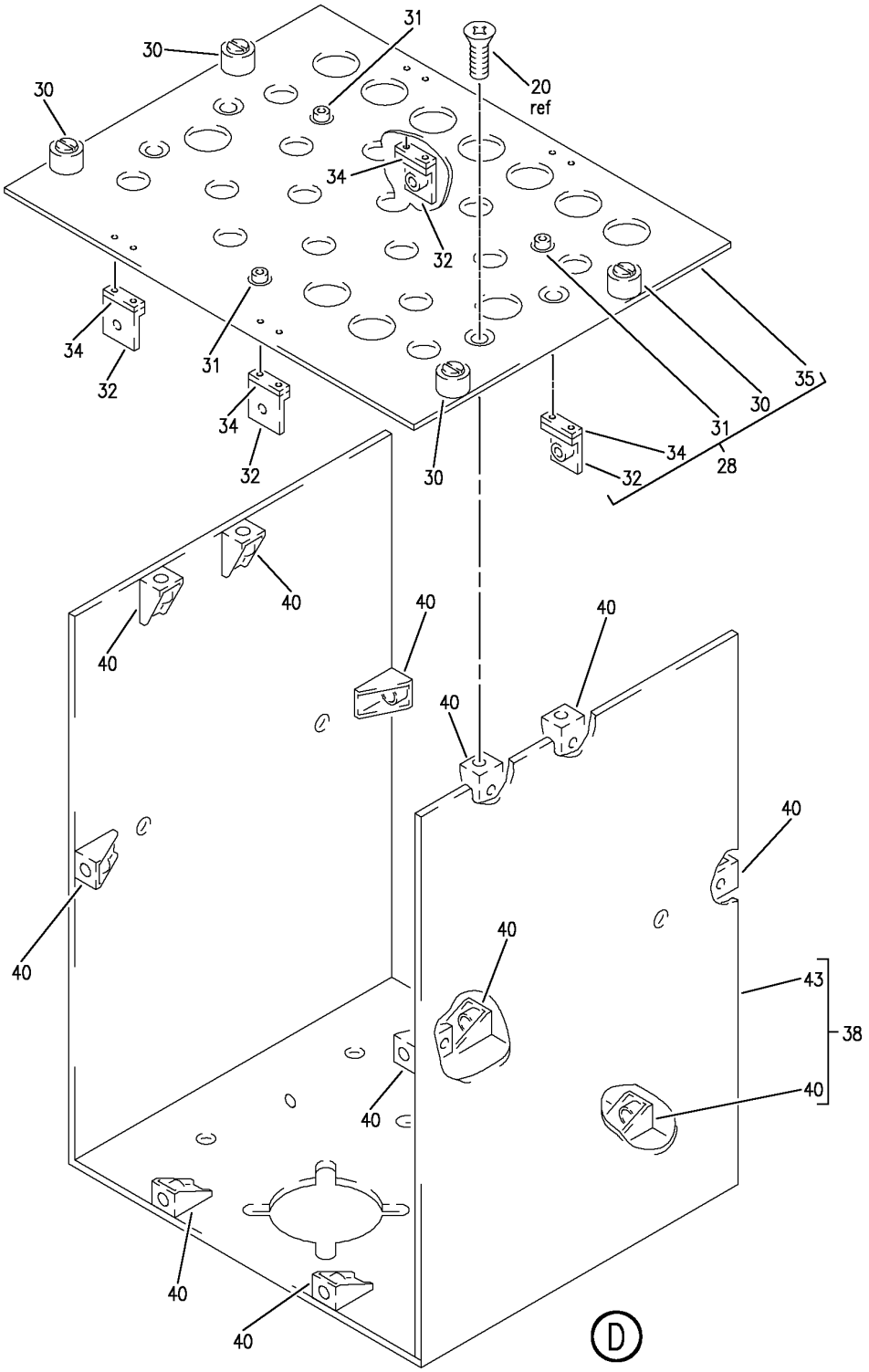

PANEL INSTL-P8 ELECTRONICS (CONTROL STAND AFT ELECTRONIC PANEL ONLY)
FIGURE 30 (SHEET 3)

BOEING PROPRIETARY - Copyright © - Unpublished Work - See title page for details.

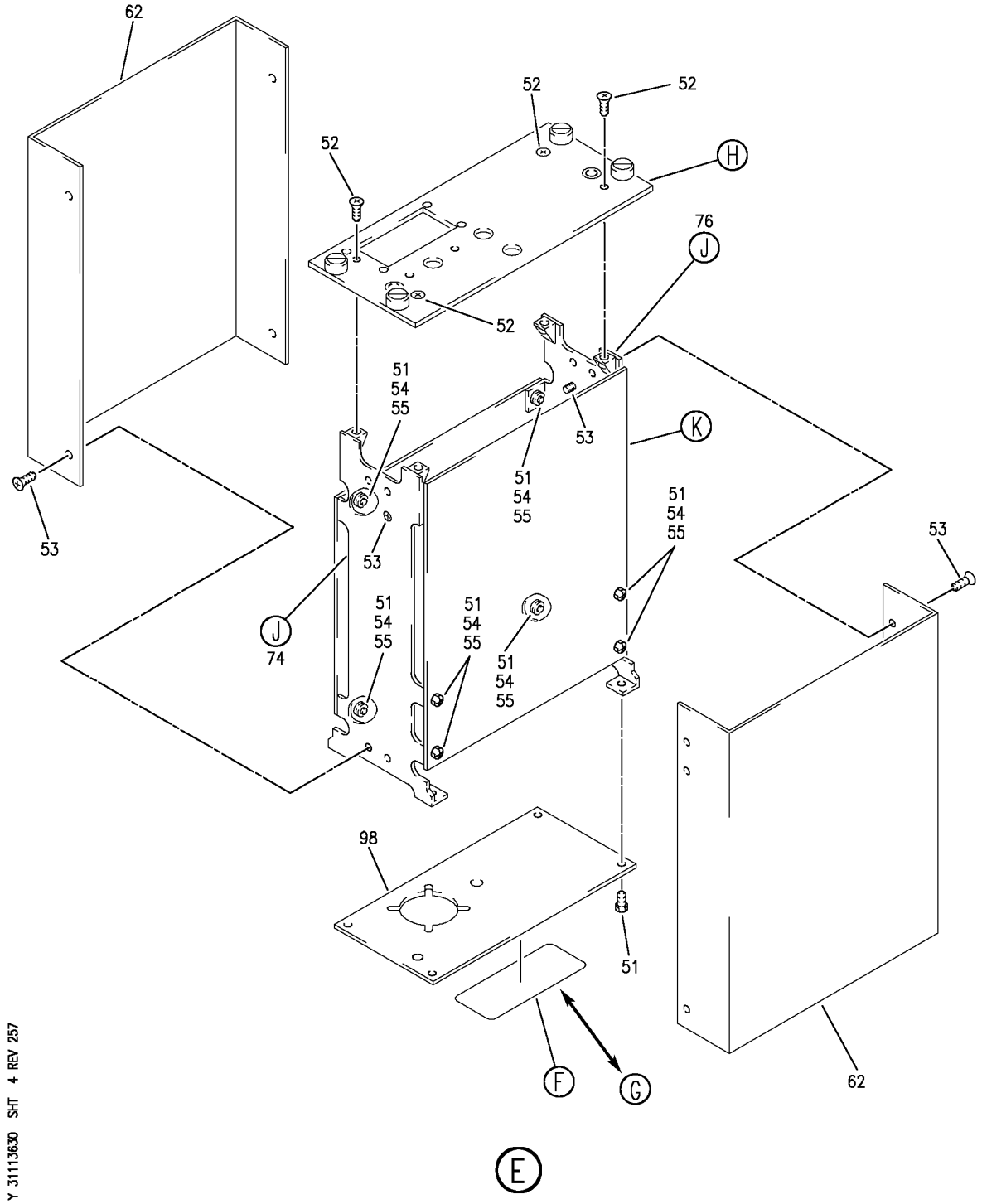

PANEL INSTL-P8 ELECTRONICS (CONTROL STAND AFT ELECTRONIC PANEL ONLY)
FIGURE 30 (SHEET 4)

BOEING PROPRIETARY - Copyright © - Unpublished Work - See title page for details.

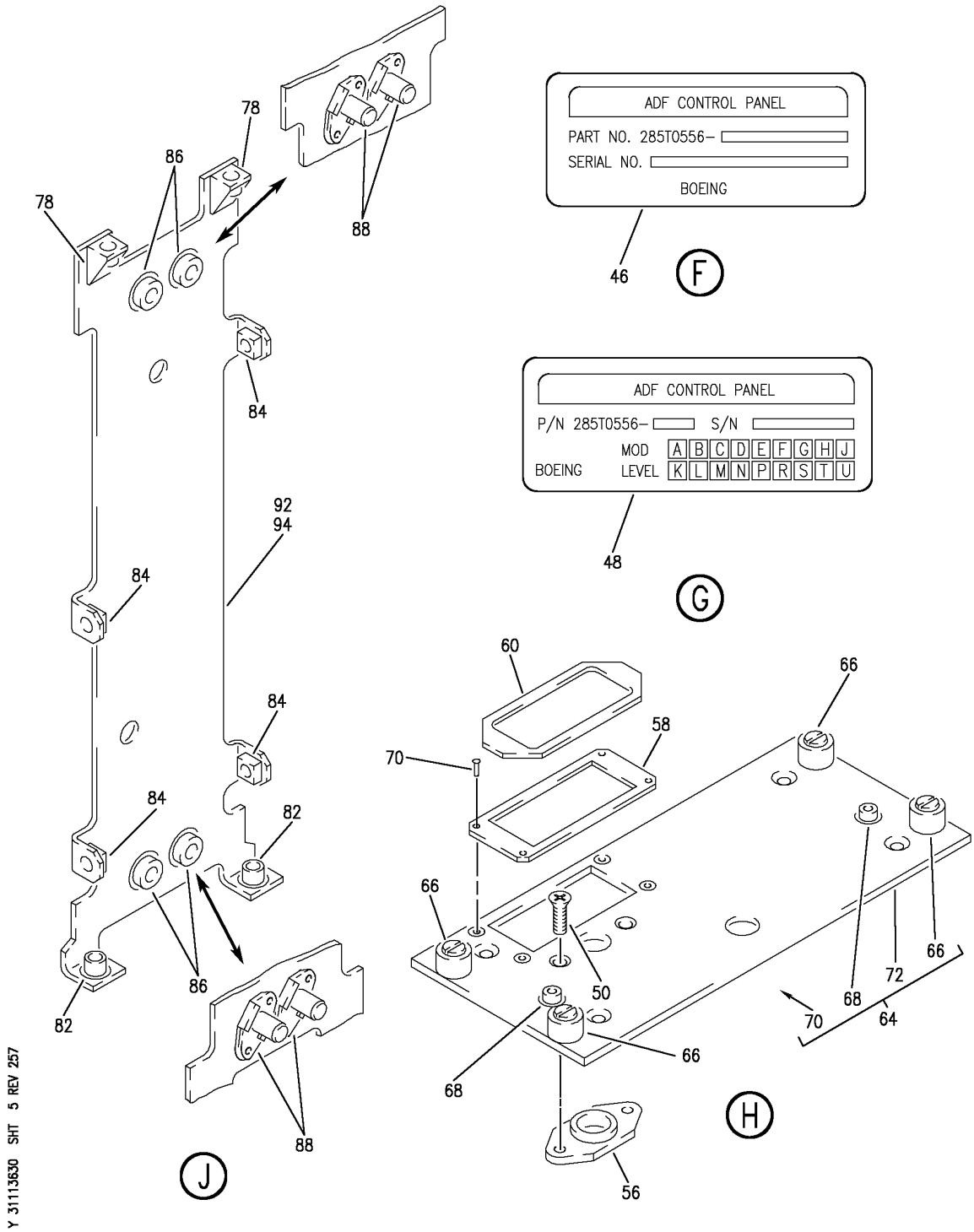

PANEL INSTL-P8 ELECTRONICS (CONTROL STAND AFT ELECTRONIC PANEL ONLY)
FIGURE 30 (SHEET 5)

BOEING PROPRIETARY - Copyright © - Unpublished Work - See title page for details.

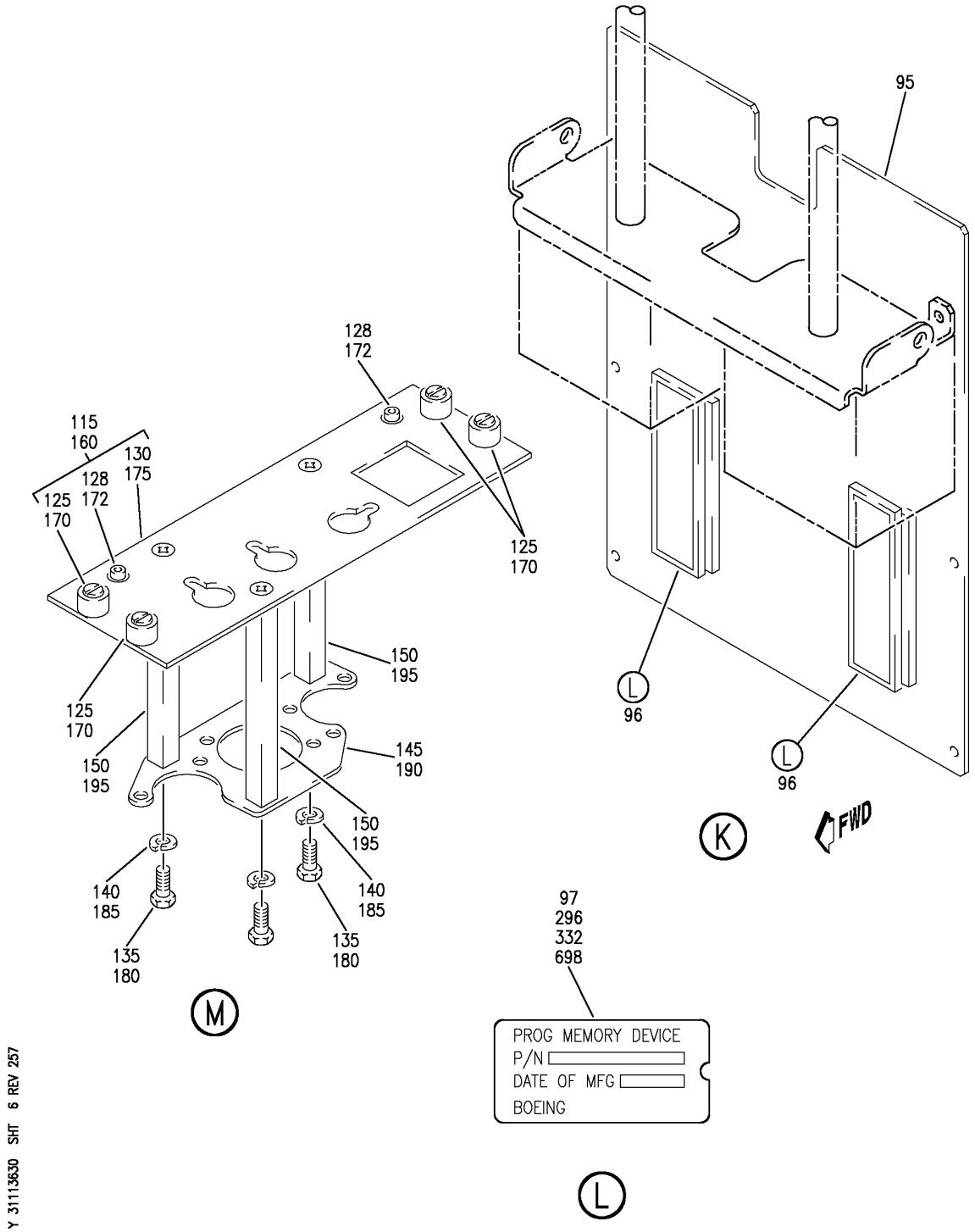

PANEL INSTL-P8 ELECTRONICS (CONTROL STAND AFT ELECTRONIC PANEL ONLY)
FIGURE 30 (SHEET 6)

BOEING PROPRIETARY - Copyright © - Unpublished Work - See title page for details.

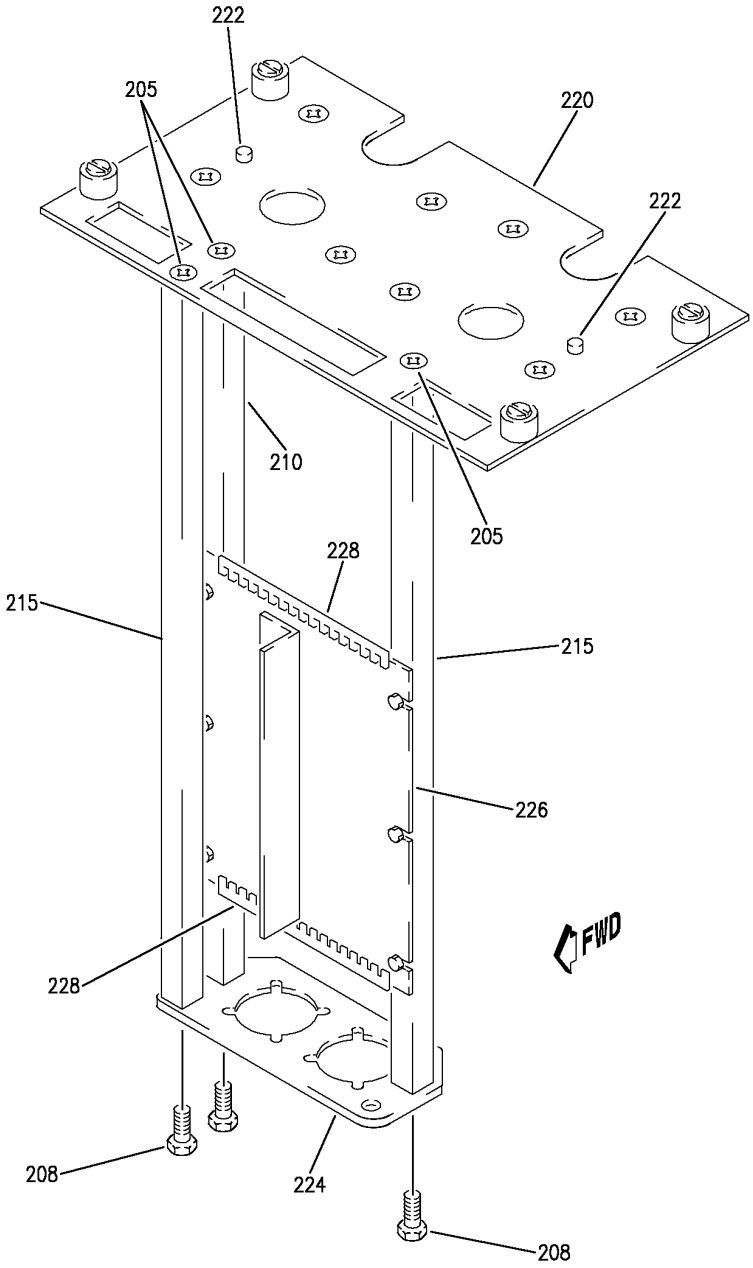

Y 31113630 SHT 7 REV 257

N

PANEL INSTL-P8 ELECTRONICS (CONTROL STAND AFT ELECTRONIC PANEL ONLY)
FIGURE 30 (SHEET 7)

BOEING PROPRIETARY - Copyright © - Unpublished Work - See title page for details.

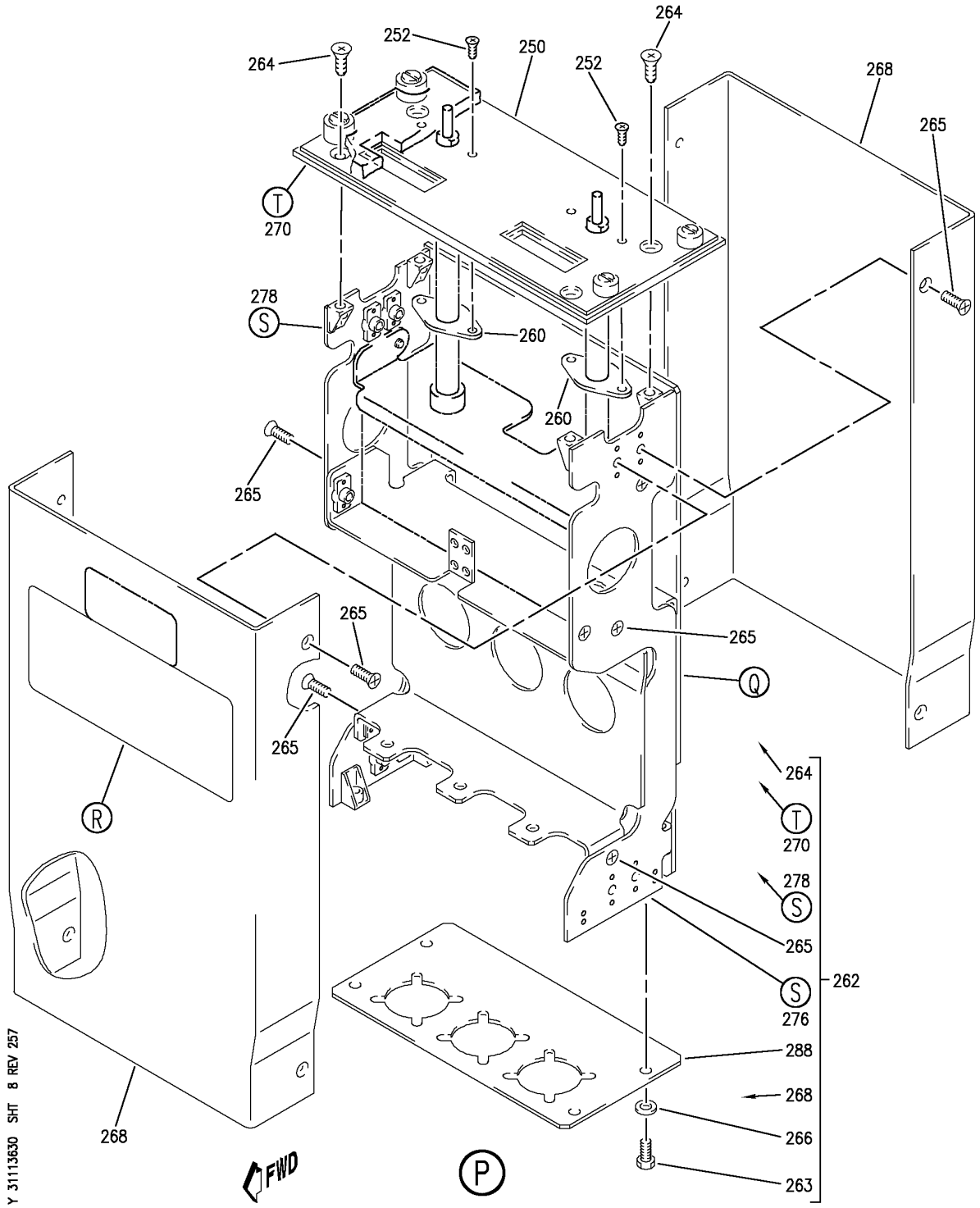

PANEL INSTL-P8 ELECTRONICS (CONTROL STAND AFT ELECTRONIC PANEL ONLY)
FIGURE 30 (SHEET 8)

BOEING PROPRIETARY - Copyright © - Unpublished Work - See title page for details.

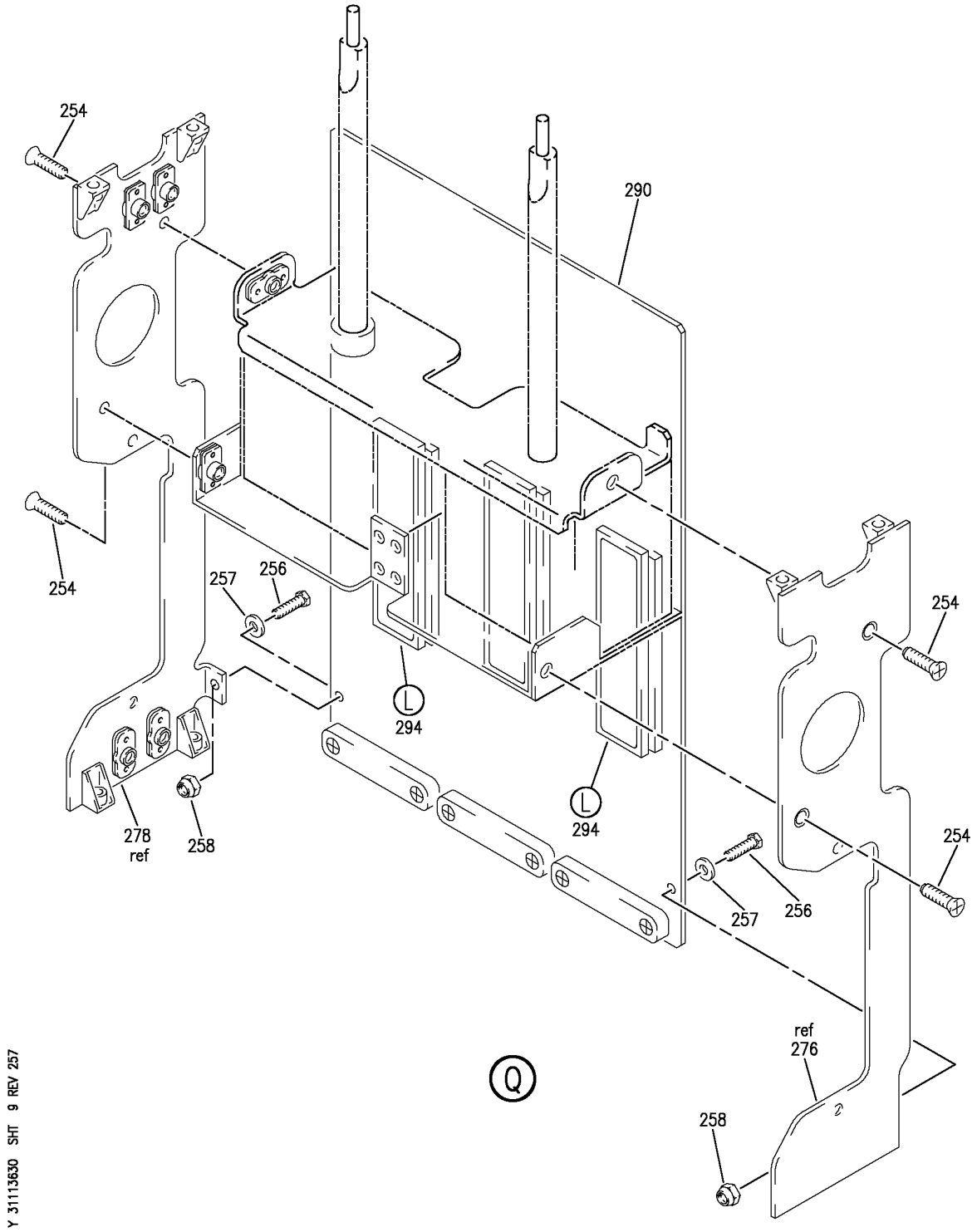

PANEL INSTL-P8 ELECTRONICS (CONTROL STAND AFT ELECTRONIC PANEL ONLY)
FIGURE 30 (SHEET 9)

BOEING PROPRIETARY - Copyright © - Unpublished Work - See title page for details.

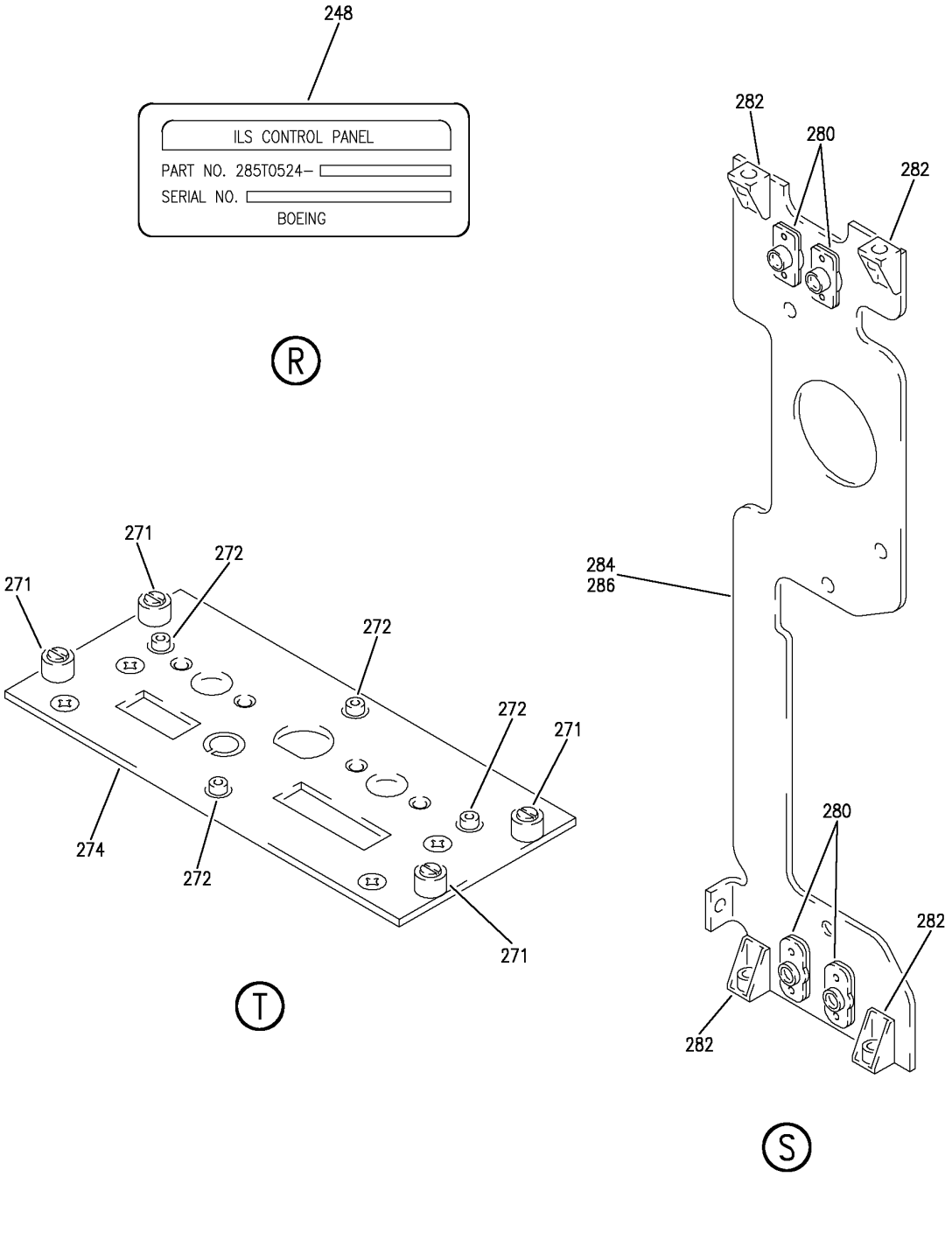

PANEL INSTL-P8 ELECTRONICS (CONTROL STAND AFT ELECTRONIC PANEL ONLY)
FIGURE 30 (SHEET 10)

BOEING PROPRIETARY - Copyright © - Unpublished Work - See title page for details.

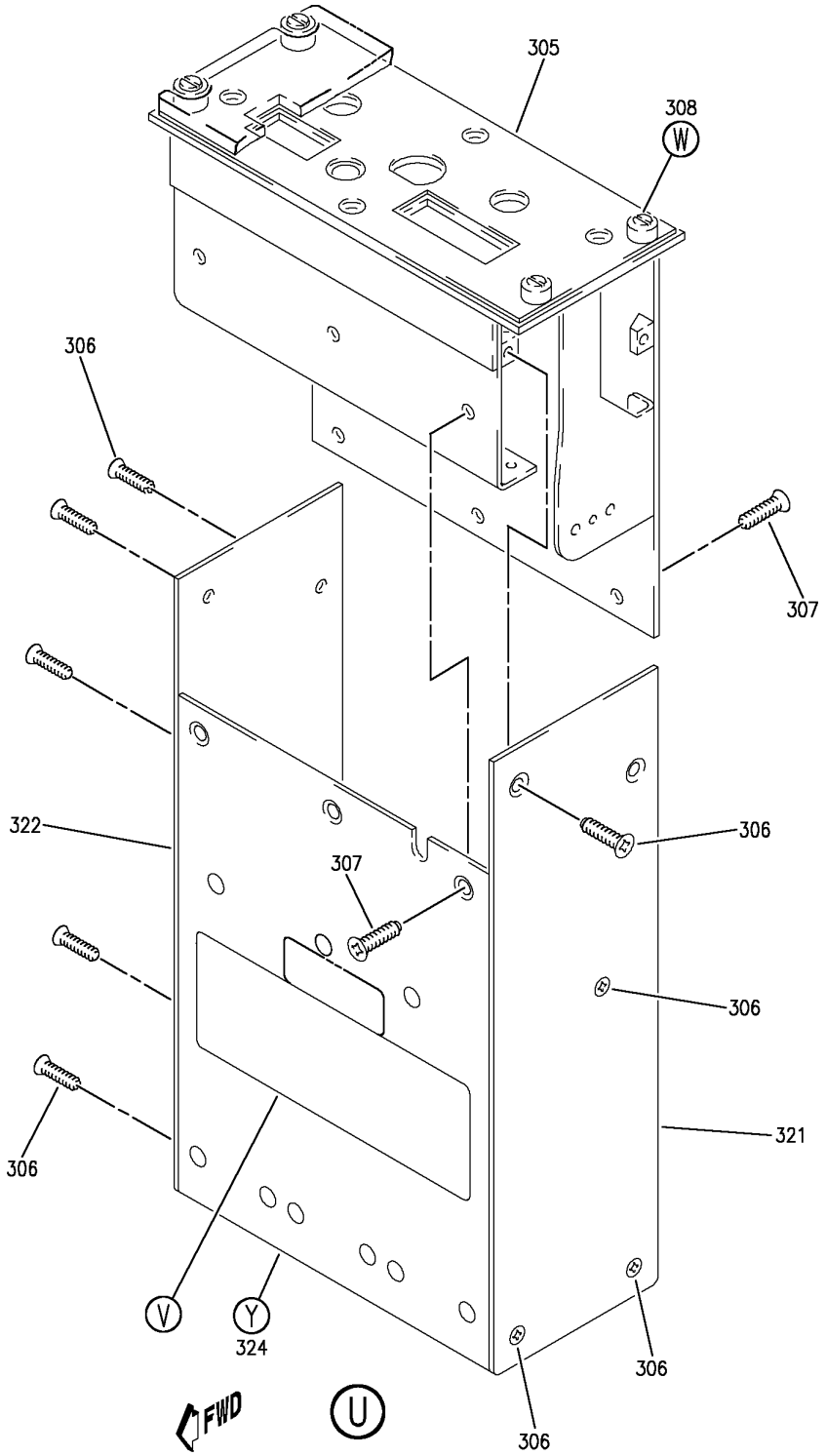

PANEL INSTL-P8 ELECTRONICS (CONTROL STAND AFT ELECTRONIC PANEL ONLY)
FIGURE 30 (SHEET 11)

BOEING PROPRIETARY - Copyright © - Unpublished Work - See title page for details.

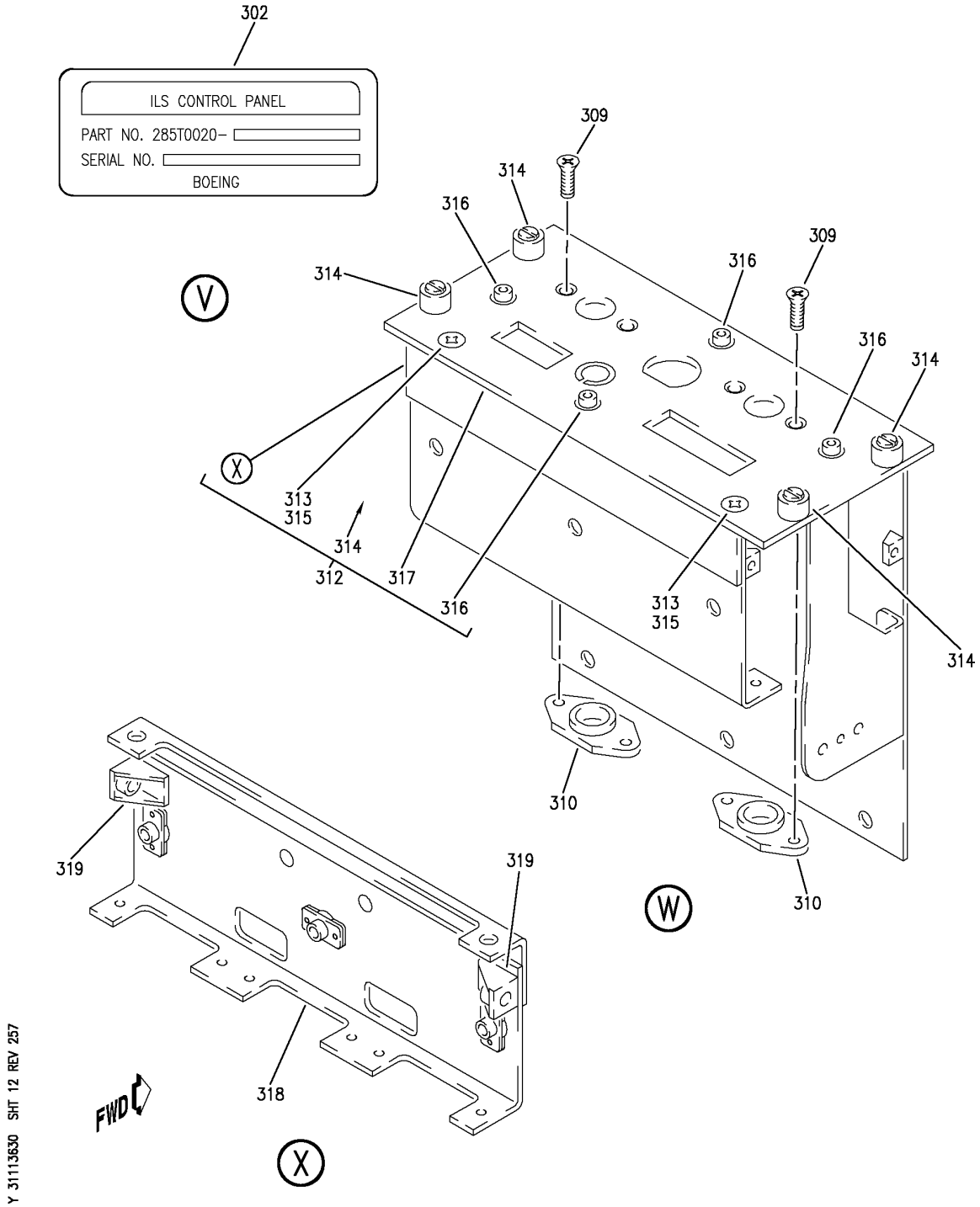

PANEL INSTL-P8 ELECTRONICS (CONTROL STAND AFT ELECTRONIC PANEL ONLY)
FIGURE 30 (SHEET 12)

BOEING PROPRIETARY - Copyright © - Unpublished Work - See title page for details.

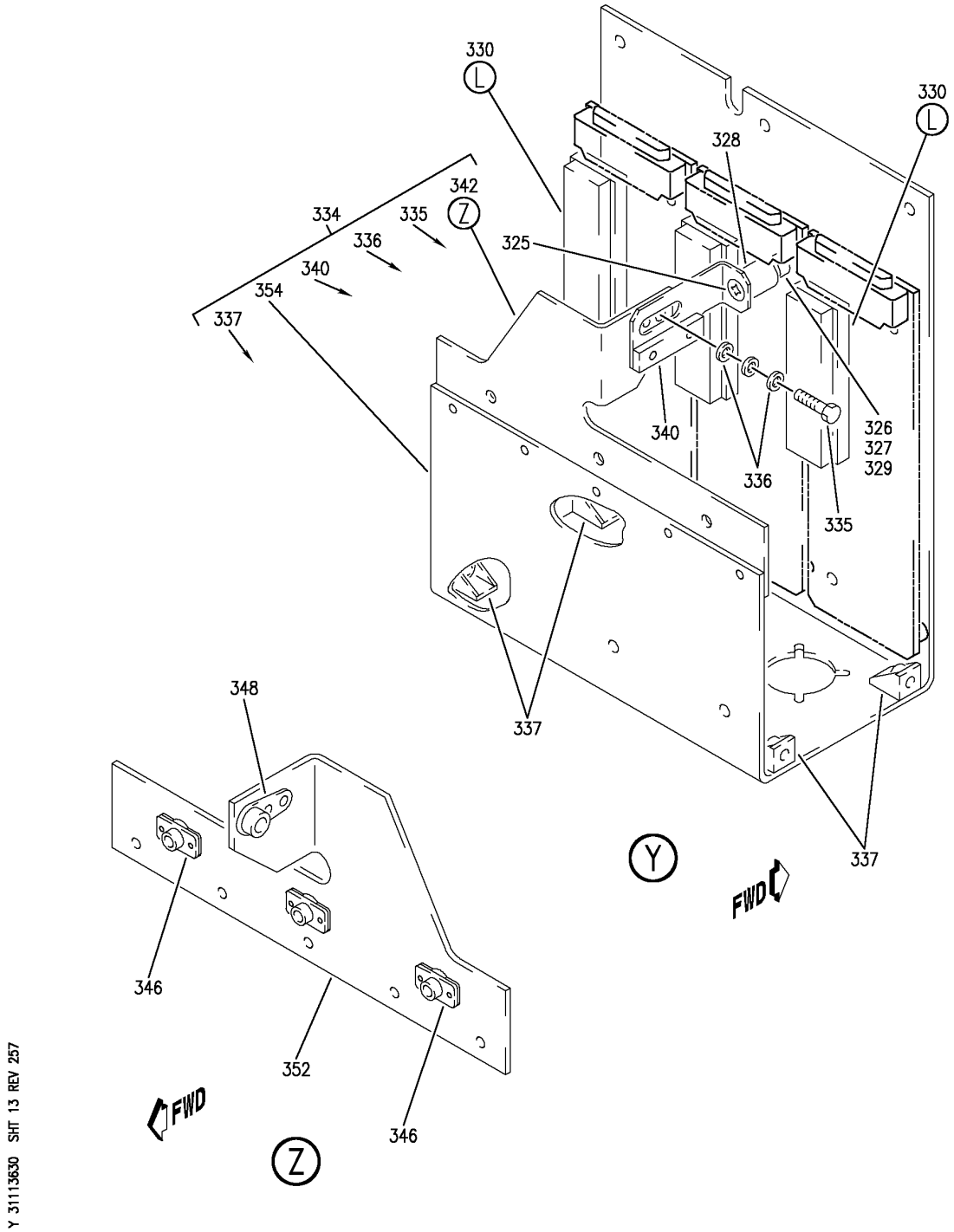

PANEL INSTL-P8 ELECTRONICS (CONTROL STAND AFT ELECTRONIC PANEL ONLY)
FIGURE 30 (SHEET 13)

BOEING PROPRIETARY - Copyright © - Unpublished Work - See title page for details.

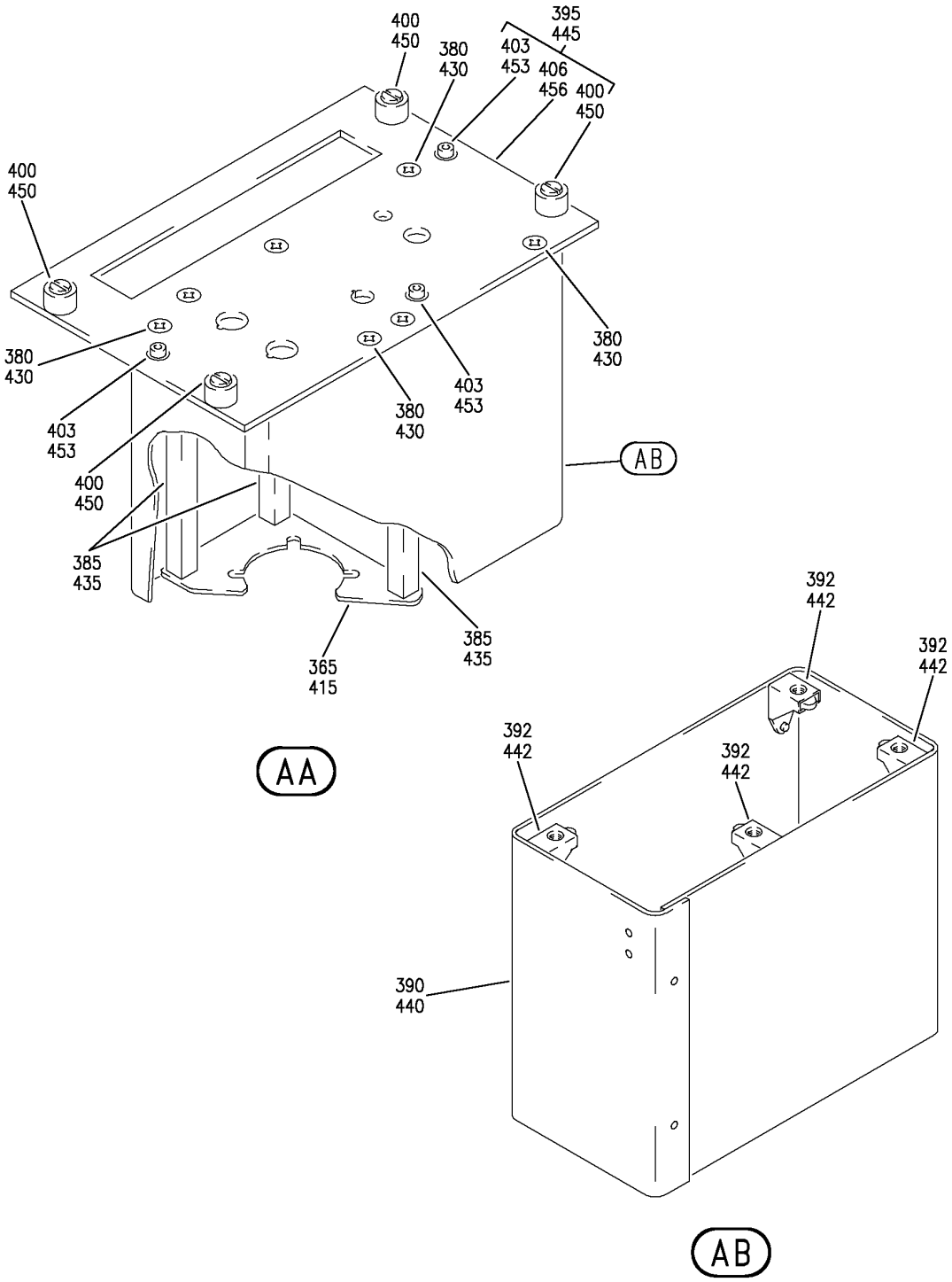

PANEL INSTL-P8 ELECTRONICS (CONTROL STAND AFT ELECTRONIC PANEL ONLY)
FIGURE 30 (SHEET 14)

BOEING PROPRIETARY - Copyright © - Unpublished Work - See title page for details.

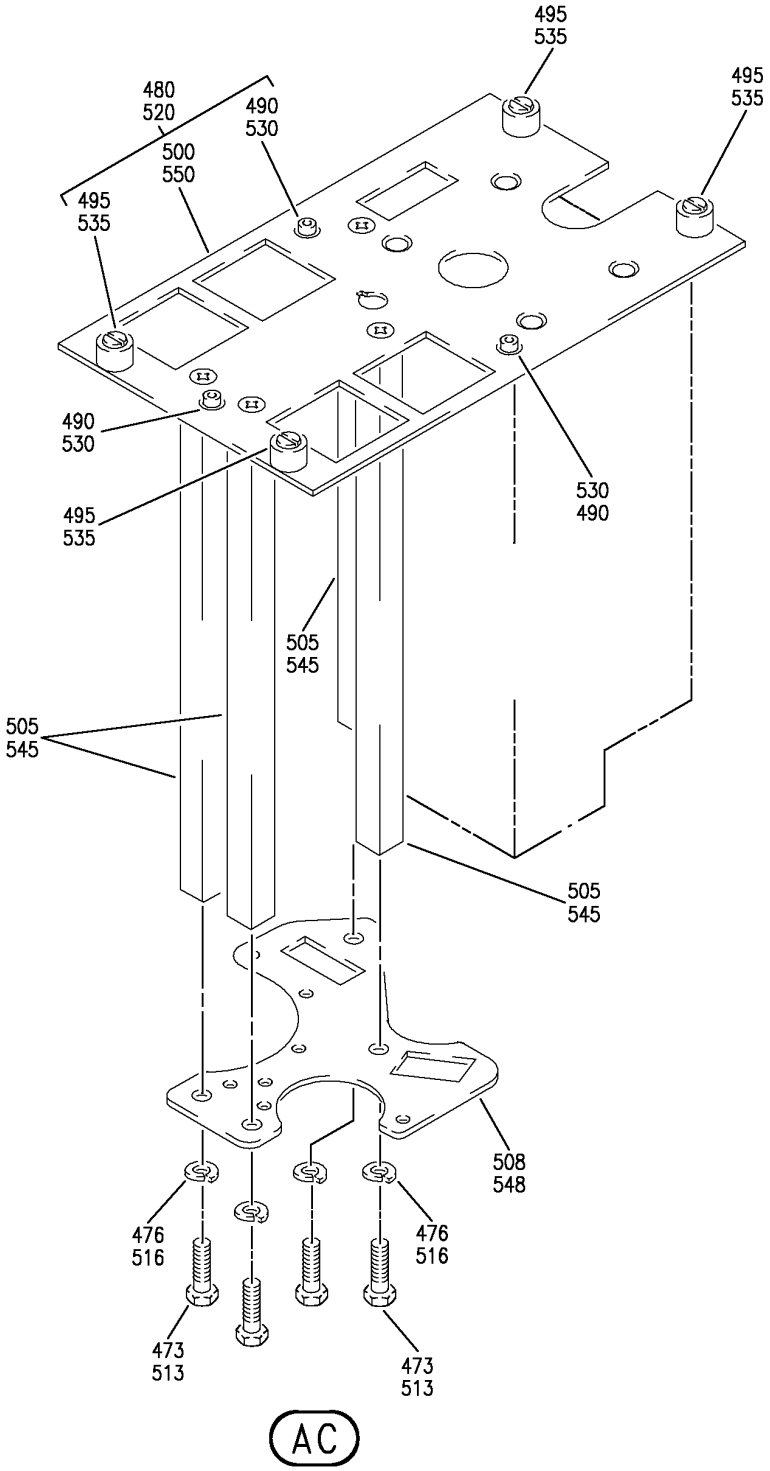

PANEL INSTL-P8 ELECTRONICS (CONTROL STAND AFT ELECTRONIC PANEL ONLY)
FIGURE 30 (SHEET 15)

BOEING PROPRIETARY - Copyright © - Unpublished Work - See title page for details.

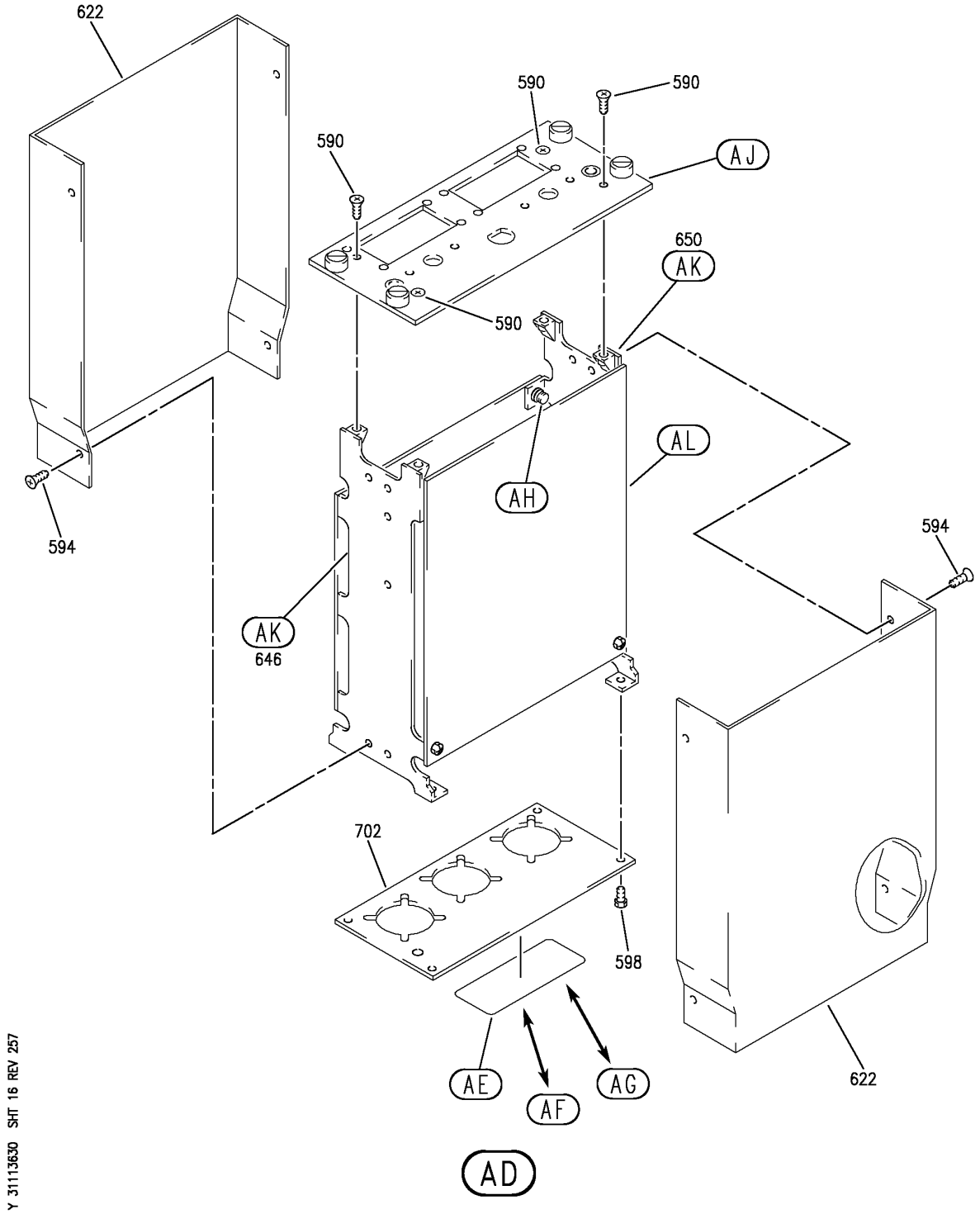

PANEL INSTL-P8 ELECTRONICS (CONTROL STAND AFT ELECTRONIC PANEL ONLY)
FIGURE 30 (SHEET 16)

BOEING PROPRIETARY - Copyright © - Unpublished Work - See title page for details.

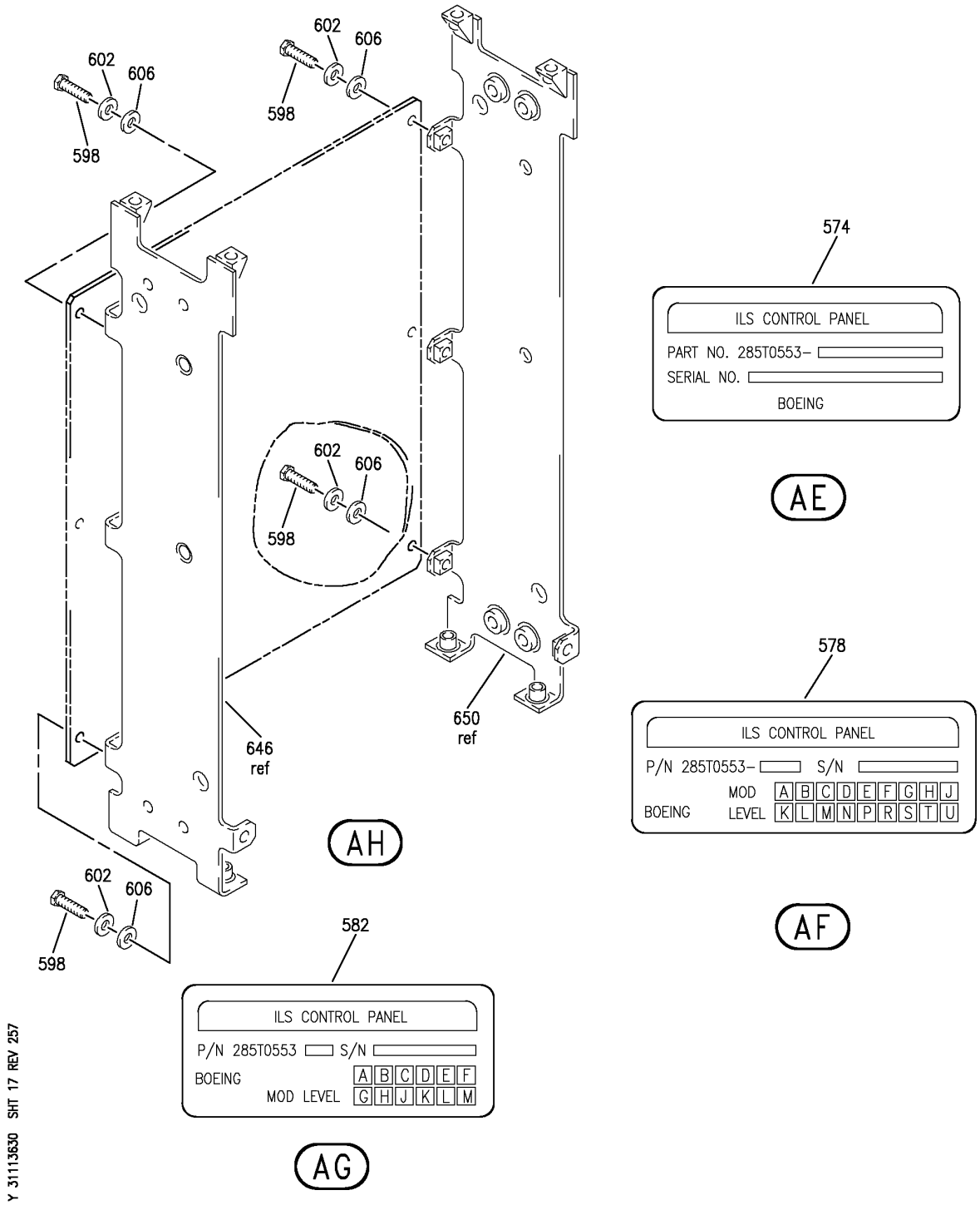

PANEL INSTL-P8 ELECTRONICS (CONTROL STAND AFT ELECTRONIC PANEL ONLY)
FIGURE 30 (SHEET 17)

BOEING PROPRIETARY - Copyright © - Unpublished Work - See title page for details.

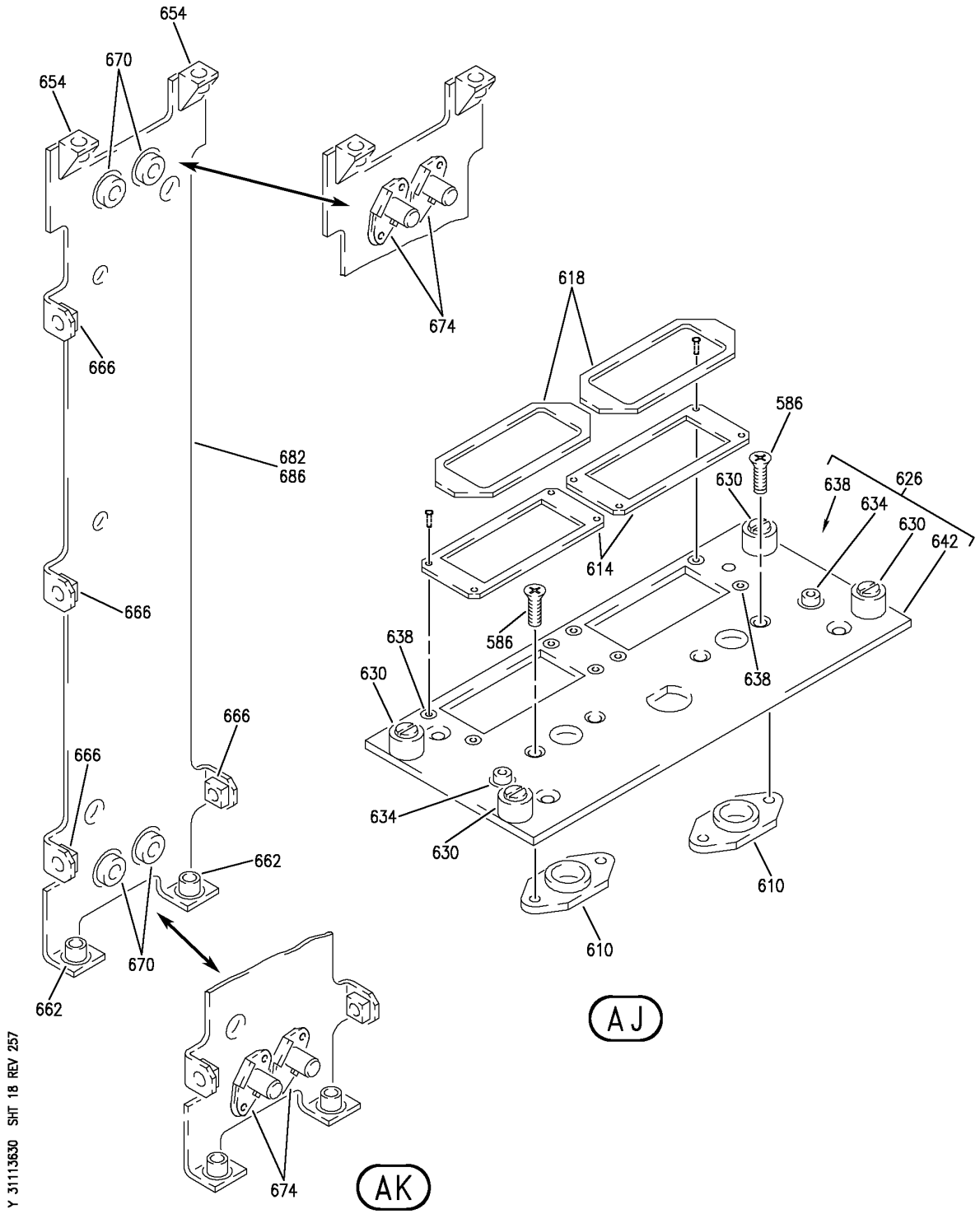

PANEL INSTL-P8 ELECTRONICS (CONTROL STAND AFT ELECTRONIC PANEL ONLY)
FIGURE 30 (SHEET 18)

BOEING PROPRIETARY - Copyright © - Unpublished Work - See title page for details.

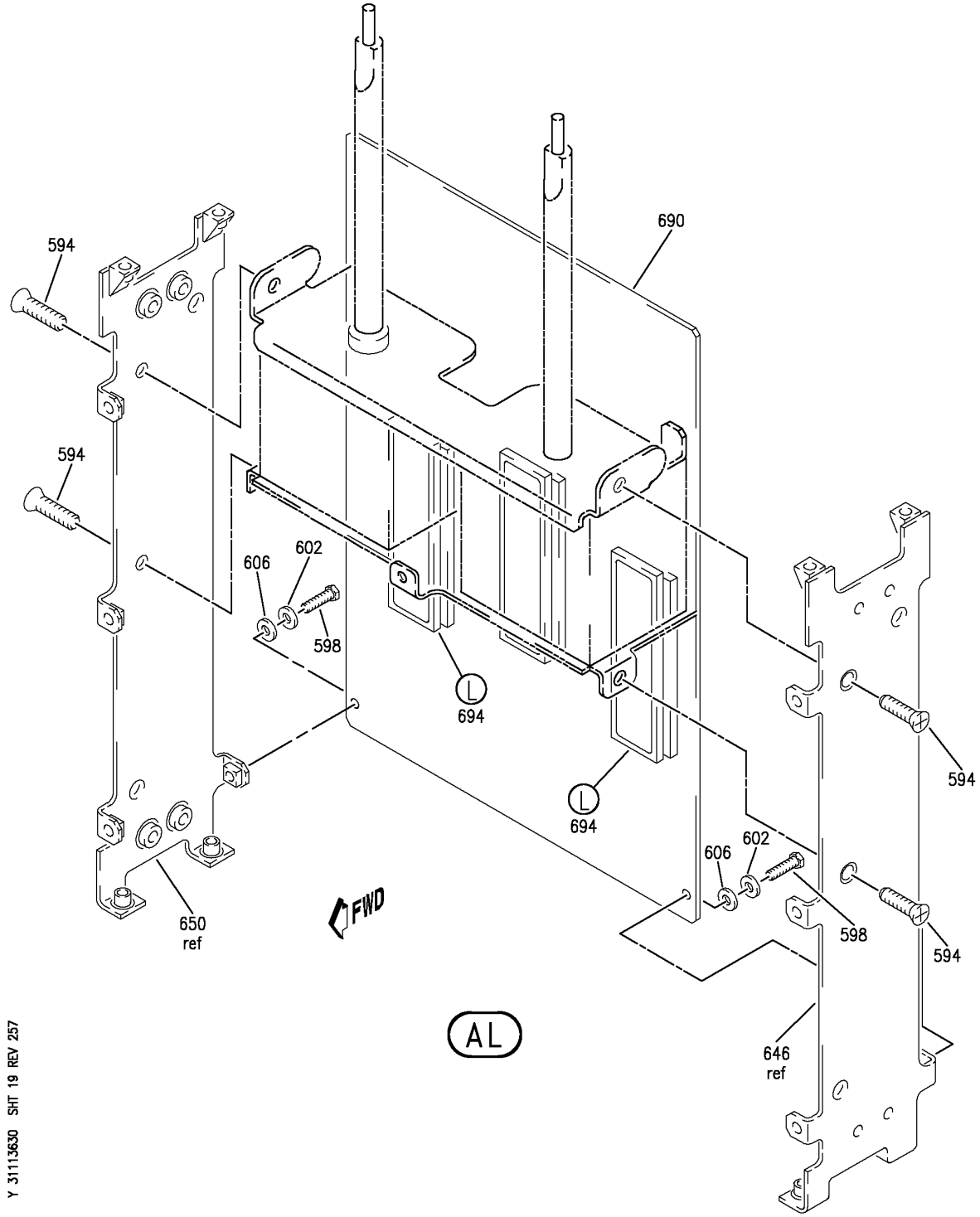

PANEL INSTL-P8 ELECTRONICS (CONTROL STAND AFT ELECTRONIC PANEL ONLY)
FIGURE 30 (SHEET 19)

BOEING PROPRIETARY - Copyright © - Unpublished Work - See title page for details.

FIG ITEM	PART NUMBER	1 2 3 4 5 6 7 NOMENCLATURE	EFFECT FROM TO	UNITS PER ASSY
30				
		PANEL INSTL-P8 ELECTRONICS (CONTROL STAND AFT ELECTRONIC PANEL ONLY)	950951	
- 1	233N6101-1	PANEL INSTL-P8 ELECTRONICS (CONTROL STAND AFT ELECTRONIC PANEL ONLY) VARIABLE DRAWING REF: 233N6101-5046 FOR NHA/OTHER SYS DET SEE: 25-10-00-05A	950951	RF
5	2041220-0412	.PANEL-WEATHER RDR CONT (CUSTOMER FURNISHED) SUPPLIER CODE: V97896 FUNCTIONAL DESCRIPTION: ALLOWS FLIGHT CREW TO SELECT OPERATIONAL MODE, GAIN, AND ANTENNA TILT ANGLE FOR THE WEATHER RADAR SYSTEM. ELECTRICAL EQUIP NUMBER: M00075 COMPONENT MAINT MANUAL REF: 34-41-12 FOR BREAKDOWN SEE: 34-43-02-01	950951	RF
10	622-6831-001	.PANEL ASSY-VHF COMM CONT (CUSTOMER FURNISHED) SUPPLIER CODE: V4V792 ELECTRICAL EQUIP NUMBER: M00078 M00079 M00080 COMPONENT MAINT MANUAL REF: 23-12-73 QUALIFIED I/W DATA: 622-5390-001 622-6831-001 AND 622-6831-002 ARE ALL INTERCHANGEABLE EXCEPT SUBJECT TO CUST PREFERENCE 622-6831-001 IS INTERCHANGEABLE WITH G6317 AS A SET ONLY. FOR BREAKDOWN SEE: 23-12-02-01	950951	RF

MISSING ITEM NUMBERS NOT APPLICABLE

- ITEM NOT ILLUSTRATED

BOEING PROPRIETARY - Copyright © - Unpublished Work - See title page for details.

FIG ITEM	PART NUMBER	1 2 3 4 5 6 7 NOMENCLATURE	EFFECT FROM TO	UNITS PER ASSY
30				
15	285T0022-43	.PANEL ASSY-AUDIO SELECTOR SUPPLIER CODE: V89954 ELECTRICAL EQUIP NUMBER: M00070 M00071 COMPONENT MAINT MANUAL REF: 23-51-54 FOR OTHER SYS DETAILS SEE: 23-51-01-01 33-13-58-01	950951	2
15	285T0022-37	.PANEL ASSY-AUDIO SELECTOR SUPPLIER CODE: V89954 ELECTRICAL EQUIP NUMBER: M00070 M00071 COMPONENT MAINT MANUAL REF: 23-51-54 FOR OTHER SYS DETAILS SEE: 23-51-01-01 33-13-58-01	950951	2
15	285T0022-27	.PANEL ASSY-AUDIO SELECTOR SUPPLIER CODE: V89954 ELECTRICAL EQUIP NUMBER: M00070 M00071 COMPONENT MAINT MANUAL REF: 23-51-51 FOR OTHER SYS DETAILS SEE: 23-51-01-01 33-13-58-01	950951	2
16	BAC27TEX4053	..MARKER-ALUMINUM FOIL SUPPLIER CODE: V89954 QUALIFIED OPTIONAL DATA: BAC27TEX1992 OPT TO BAC27TEX4053 WHEN USED WITH ASSOCIATED PARTS USED ON: 285T0022-43 285T0022-37	950951	1

MISSING ITEM NUMBERS NOT APPLICABLE

— ITEM NOT ILLUSTRATED

BOEING PROPRIETARY - Copyright © - Unpublished Work - See title page for details.

FIG ITEM	PART NUMBER	1 2 3 4 5 6 7 NOMENCLATURE	EFFECT FROM TO	UNITS PER ASSY
30				
18	BAC27TEX1992	..MARKER-ALUMINUM FOIL QUALIFIED OPTIONAL DATA: BAC27TEX1992 OPT TO BAC27TEX4053 WHEN USED WITH ASSOCIATED PARTS USED ON: 285T0022-43 285T0022-37	950951	1
18	BAC27TEX1992	..MARKER-ALUMINUM FOIL USED ON: 285T0022-27	950951	1
20	NAS514P440-5	..SCREW	950951	12
22	NAS514P440-4	..SCREW	950951	4
25	NAS514P632-5	..SCREW	950951	4
26	BACG20ZA350	..GROMMET- OPTIONAL PART: BACG20ZA000350 USED ON: 285T0022-43	950951	2
26	BACG20ZA350	..GROMMET- USED ON: 285T0022-37 285T0022-27	950951	2
26	BACG20ZA000350	..GROMMET- OPTIONAL PART: BACG20ZA350 USED ON: 285T0022-43	950951	2
28	285T0179-43	..PANEL ASSY-FRONT SUPPLIER CODE: V89954	950951	1
30	D1400-6A1	...STUD ASSY SUPPLIER CODE: V08524 SPECIFICATION NUMBER: BACS21DD1	950951	4
31	SF6G6CBB5D	...NUT SUPPLIER CODE: V12324 SPECIFICATION NUMBER: BACN10PA06-6	950951	3
32	F19716-06	...NUT-ANCHOR SUPPLIER CODE: V15653 ATTACHING PARTS	950951	4
- 33	BACR15BA2AD	...RIVET- SIZE DETERMINED ON INSTL. -------*-------	950951	8

MISSING ITEM NUMBERS NOT APPLICABLE

– ITEM NOT ILLUSTRATED

BOEING PROPRIETARY - Copyright © - Unpublished Work - See title page for details.

FIG ITEM	PART NUMBER	1 2 3 4 5 6 7 NOMENCLATURE	EFFECT FROM TO	UNITS PER ASSY
30				
34	285T0179-45	...SPACER- SUPPLIER CODE: V89954	950951	4
35	285T0179-44	...PANEL- SUPPLIER CODE: V89954	950951	1
36	285T0179-47	..PANEL- SUPPLIER CODE: V89954	950951	2
38	285T0179-48	..CHASSIS ASSY- SUPPLIER CODE: V89954	950951	1
40	F22A27M22-40	...NUT-ANCHOR SUPPLIER CODE: V0217B OPTIONAL PART: A27M88-04 V62554	950951	12
40	A27M88-04	...NUT-ANCHOR SUPPLIER CODE: V62554 OPTIONAL PART: F22A27M22-40 V0217B ATTACHING PARTS	950951	12
- 42	BACR15BA2AD	...RIVET- SIZE DETERMINED ON INSTL. -------*-------	950951	24
43	285T0179-24	...CHASSIS- SUPPLIER CODE: V89954	950951	1
45	285T0556-1	.PANEL ASSY-ADF CONT SUPPLIER CODE: V89954 ELECTRICAL EQUIP NUMBER: M00085 COMPONENT MAINT MANUAL REF: 34-57-61 FOR OTHER SYS DETAILS SEE: 33-13-58-01 34-57-02-01 11-31-05-53	950951	1
46	BAC27TEX3468	..MARKER-ALUMINUM FOIL SUPPLIER CODE: V89954 QUALIFIED OPTIONAL DATA: BAC27TEX3468 OPT TO BAC27TEX4175 WHEN USED W/ ASSOCIATED PARTS.	950951	1

MISSING ITEM NUMBERS NOT APPLICABLE

- ITEM NOT ILLUSTRATED

BOEING PROPRIETARY - Copyright © - Unpublished Work - See title page for details.

FIG ITEM	PART NUMBER	1 2 3 4 5 6 7 NOMENCLATURE	EFFECT FROM TO	UNITS PER ASSY
30				
48	BAC27TEX4175	..MARKER-ALUMINUM FOIL SUPPLIER CODE: V89954 QUALIFIED OPTIONAL DATA: BAC27TEX3468 OPT TO BAC27TEX4175 WHEN USED W/ ASSOCIATED PARTS.	950951	1
50	MS35206-202	..SCREW	950951	2
51	NAS1801-04-5	..SCREW	950951	12
52	NAS514P440-4P	..SCREW	950951	4
53	NAS514P440-5P	..SCREW	950951	10
54	MS35338-40	..WASHER	950951	8
55	AN960-4L	..WASHER	950951	8
56	WCS225-5	..SEAL ASSY-SHAFT SUPPLIER CODE: V51074 QUALIFIED OPTIONAL DATA: WCS225-5 OPT TO WCS225-9 WHEN USED WITH ASSOCIATED PARTS	950951	1
56	WCS225-9	..SEAL ASSY-SHAFT SUPPLIER CODE: V51074 QUALIFIED OPTIONAL DATA: WCS225-5 OPT TO WCS225-9 WHEN USED WITH ASSOCIATED PARTS	950951	1
58	285T0580-1	..GASKET-LCD MODULE SUPPLIER CODE: V89954 OPTIONAL PART: 285T0580-2 V89954	950951	1
58	285T0580-2	..GASKET ASSY-LCD MODULE SUPPLIER CODE: V89954 OPTIONAL PART: 285T0580-1 V89954	950951	1
60	285T1151-1	..GASKET- SUPPLIER CODE: V89954 QUALIFIED OPTIONAL DATA: 285T1151-1 OPT TO 285T1151-2 WHEN USED WITH ASSOCIATED PARTS.	950951	1

MISSING ITEM NUMBERS NOT APPLICABLE

– ITEM NOT ILLUSTRATED

BOEING PROPRIETARY - Copyright © - Unpublished Work - See title page for details.

FIG ITEM	PART NUMBER	1 2 3 4 5 6 7 NOMENCLATURE	EFFECT FROM TO	UNITS PER ASSY
30				
60	285T1151-2	..GASKET- SUPPLIER CODE: V89954 QUALIFIED OPTIONAL DATA: 285T1151-1 OPT TO 285T1151-2 WHEN USED WITH ASSOCIATED PARTS.	950951	1
62	285T0549-2	..COVER ASSY- SUPPLIER CODE: V89954	950951	2
64	285T0548-5	..PANEL ASSY-FRONT SUPPLIER CODE: V89954	950951	1
66	BACS21DD1B	...STUD ASSY SUPPLIER CODE: V08524 SPECIFICATION NUMBER: BACS21DD1B	950951	4
68	SF6G6CBB5D	...NUT SUPPLIER CODE: V12324 SPECIFICATION NUMBER: BACN10PA06-6	950951	2
70	U256-1	...NUT-PRESS SUPPLIER CODE: V46384	950951	4
72	285T0548-15	...PANEL- SUPPLIER CODE: V89954	950951	1
74	285T0550-15	..PANEL ASSY-SIDE SUPPLIER CODE: V89954 OPTIONAL PART: 285T0550-3 V89954 285T0550-11 V89954	950951	1
74	285T0550-11	..PANEL ASSY-SIDE SUPPLIER CODE: V89954 OPTIONAL PART: 285T0550-3 V89954 285T0550-15 V89954	950951	1

MISSING ITEM NUMBERS NOT APPLICABLE

– ITEM NOT ILLUSTRATED

BOEING PROPRIETARY - Copyright © - Unpublished Work - See title page for details.

FIG ITEM	PART NUMBER	1 2 3 4 5 6 7 NOMENCLATURE	EFFECT FROM TO	UNITS PER ASSY
30				
74	285T0550-3	..PANEL ASSY-SIDE SUPPLIER CODE: V89954 OPTIONAL PART: 285T0550-11 V89954 285T0550-15 V89954	950951	1
76	285T0550-16	..PANEL ASSY-SIDE SUPPLIER CODE: V89954 OPTIONAL PART: 285T0550-4 V89954 285T0550-12 V89954	950951	1
76	285T0550-12	..PANEL ASSY-SIDE SUPPLIER CODE: V89954 OPTIONAL PART: 285T0550-4 V89954 285T0550-16 V89954	950951	1
76	285T0550-4	..PANEL ASSY-SIDE SUPPLIER CODE: V89954 OPTIONAL PART: 285T0550-12 V89954 285T0550-16 V89954	950951	1
78	F22A27M22-40	...NUT-ANCHOR SUPPLIER CODE: V0217B ATTACHING PARTS	950951	2
- 80	BACR15BA2AD	...RIVET- SIZE DETERMINED ON INSTL. -------*-------	950951	4
82	FE0440EF	...NUT-PRESS SUPPLIER CODE: V46384	950951	2

MISSING ITEM NUMBERS NOT APPLICABLE

- ITEM NOT ILLUSTRATED

BOEING PROPRIETARY - Copyright © - Unpublished Work - See title page for details.

FIG ITEM	PART NUMBER	1 2 3 4 5 6 7 NOMENCLATURE	EFFECT FROM TO	UNITS PER ASSY
30				
84	FE0440EF	...NUT-PRESS SUPPLIER CODE: V46384 USED ON: 285T0550-11 285T0550-12 285T0550-15 285T0550-16	950951	4
84	FE0X440	...NUT-PRESS SUPPLIER CODE: V46384 USED ON: 285T0550-3 285T0550-4	950951	4
86	LAC440-1	...NUT-PRESS SUPPLIER CODE: V46384 USED ON: 285T0550-3 285T0550-4 285T0550-11 285T0550-12	950951	4
88	BACN10XR04	...NUTPLATE- USED ON: 285T0550-15 285T0550-16 ATTACHING PARTS	950951	4
- 90	BACR15BA2AD	...RIVET- SIZE DETERMINED ON INSTL. USED ON: 285T0550-15 285T0550-16 -------*-------	950951	8
92	285T0550-19	...PANEL- SUPPLIER CODE: V89954 USED ON: 285T0550-15	950951	1
92	285T0550-7	...PANEL- SUPPLIER CODE: V89954 USED ON: 285T0550-3 285T0550-11	950951	1
94	285T0550-20	...PANEL- SUPPLIER CODE: V89954 USED ON: 285T0550-16	950951	1

MISSING ITEM NUMBERS NOT APPLICABLE

- ITEM NOT ILLUSTRATED

BOEING PROPRIETARY - Copyright © - Unpublished Work - See title page for details.

FIG ITEM	PART NUMBER	1 2 3 4 5 6 7 NOMENCLATURE	EFFECT FROM TO	UNITS PER ASSY
30				
94	285T0550-8	...PANEL- SUPPLIER CODE: V89954 USED ON: 285T0550-4 285T0550-12	950951	1
95	285T0561-2	..MODULE ASSY-ELECT. SUPPLIER CODE: V89954	950951	1
96	285T0569-1	...DEVICE ASSY-PROGRAMMED MEMORY SUPPLIER CODE: V89954	950951	2
97	BAC27TEX2007	....DECAL- OPTIONAL PART: WHB673-1D0X0D5 V85480	950951	1
97	WHB673-1D0X0D5	....DECAL- SUPPLIER CODE: V85480 OPTIONAL PART: BAC27TEX2007	950951	1
98	285T0546-4	..PANEL-REAR SUPPLIER CODE: V89954	950951	1
100	BACP10U0262T	.PANEL	950951	1
155	233N6204-15	.PANEL ASSY-FIRE/OVERHEAT TEST SUPPLIER CODE: V89954 ELECTRICAL EQUIP NUMBER: M10445 COMPONENT MAINT MANUAL REF: 26-11-52 QUALIFIED I/W DATA: 233N6204-13 -14 -15 -17 ARE ALL INTERCHANGEABLE EXCEPT SUBJECT TO CUSTOMER PREFERENCE THE 233N6204-301 PANEL ASSY IS I/W THE 233N6204-15 PANEL ASSY T/W THE S233T100-5508 LIGHTPLATE. FOR OTHER SYS DETAILS SEE: 26-11-02-02 26-12-51-01 26-17-51-03	950951	1

MISSING ITEM NUMBERS NOT APPLICABLE

– ITEM NOT ILLUSTRATED

BOEING PROPRIETARY - Copyright © - Unpublished Work - See title page for details.

	FIG ITEM	PART NUMBER	1 2 3 4 5 6 7 NOMENCLATURE	EFFECT FROM TO	UNITS PER ASSY
	30				
	160	233N6204-11	..BASEPLATE ASSY- SUPPLIER CODE: V89954 ATTACHING PARTS	950951	1
-	165	NAS514P632-5	..SCREW -------*-------	950951	3
R	170	PFSC35-38ASEMB	...STUD ASSY SUPPLIER CODE: V72794 SPECIFICATION NUMBER: BACS21DX1B	950951	4
R					
R					
R					
R					
	172	SF6G6CBB5D	...NUT SUPPLIER CODE: V12324 SPECIFICATION NUMBER: BACN10PA06-6	950951	2
	175	233N6204-12	...BASEPLATE- SUPPLIER CODE: V89954	950951	1
	180	NAS1801-06-5	..SCREW- OPTIONAL PART: BACS12HN06-5	950951	3
	180	BACS12HN06-5	..SCREW- OPTIONAL PART: NAS1801-06-5	950951	3
	185	MS35338-41	..WASHER- OPTIONAL PART: BACW10EC06S	950951	3
	185	BACW10EC06S	..WASHER- OPTIONAL PART: MS35338-41	950951	3
	190	233N3250-40	..BRACKET-SPRT	950951	1
	195	69B46200-14	..STANDOFF	950951	3

MISSING ITEM NUMBERS NOT APPLICABLE

- ITEM NOT ILLUSTRATED

BOEING PROPRIETARY - Copyright © - Unpublished Work - See title page for details.

	FIG ITEM	PART NUMBER	1 2 3 4 5 6 7 NOMENCLATURE	EFFECT FROM TO	UNITS PER ASSY
	30				
R	200	233N6205-12	.PANEL ASSY-ENG FIRE CONT	950951	1
R			SUPPLIER CODE:		
R			V89954		
R			ELECTRICAL EQUIP NUMBER:		
R			M10443		
R			COMPONENT MAINT MANUAL REF:		
R			26-15-41		
R			QUALIFIED I/W DATA:		
R			233N6205-12 MAY REPLACE		
R			BUT MAY NOT BE REPLACED		
R			BY 233N6205-8 OR		
R			233N6205-6 OR 233N6205-1		
R			IN ACCORDANCE WITH		
R			SERVICE BULLETIN		
R			757-26-0023 FOR 757		
R			AIRCRAFTS ONLY.		
R			FOR OTHER SYS DETAILS SEE:		
R			26-11-54-01		
R			26-21-01-01		
	205	NAS514P632-5	..SCREW	950951	3
	208	NAS1801-06-5	..SCREW	950951	3
R	210	69B46200-29	..STANDOFF	950951	1
	215	233N6205-17	..STANDOFF-	950951	2
			SUPPLIER CODE:		
			V89954		
	220	233N6205-13	..BASEPLATE ASSY-	950951	1
			SUPPLIER CODE:		
			V89954		
	222	SF6GXBAS8D	...PIN-	950951	2
			SUPPLIER CODE:		
			V12324		
	224	233N3250-61	..BRACKET-SPRT	950951	1
	226	233N6205-16	..BRACKET ASSY-	950951	1
			SUPPLIER CODE:		
			V89954		
			ATTACHING PARTS		
-	227	NAS1801-04-4	..SCREW	950951	6
			-------*-------		
	228	BACG20ZA0208	...GROMMET	950951	2

MISSING ITEM NUMBERS NOT APPLICABLE

- ITEM NOT ILLUSTRATED

BOEING PROPRIETARY - Copyright © - Unpublished Work - See title page for details.

FIG ITEM	PART NUMBER	1 2 3 4 5 6 7 NOMENCLATURE	EFFECT FROM TO	UNITS PER ASSY
30				
230	2229346-32	.MANAGEMENT UNIT- INTERACTIVE DISPLAY UNIT SUPPLIER CODE: V98571 ELECTRICAL EQUIP NUMBER: M10893 COMPONENT MAINT MANUAL REF: 31-32-38 FOR BREAKDOWN SEE: 23-22-02-01	950951	RF
235	071-01503-1501	.PANEL ASSY-DUAL AIR TRAFFIC CONT (CUSTOMER FURNISHED) SUPPLIER CODE: V97896 FUNCTIONAL DESCRIPTION: ALLOWS FLIGHT CREW TO SELECT ATC TRANSPONDER IDENT CODE TO FACILITATE GROUND TRACKING OF ACFT POSITION. ELECTRICAL EQUIP NUMBER: M10140 POST AIRLINE MOD: -30 VALP	950951	1
245	285T0524-6	.PANEL ASSY-ILS ONT SUPPLIER CODE: V89954 ELECTRICAL EQUIP NUMBER: M00087 COMPONENT MAINT MANUAL REF: 34-31-52 FOR OTHER SYS DETAILS SEE: 11-31-05-53 33-13-58-01 34-31-02-01	950951	1
248	BAC27TEX2825	..MARKER-ALUMINUM FOIL SUPPLIER CODE: V89954	950951	1
250	S233-6	..SEAL- SUPPLIER CODE: V51896 OPTIONAL PART: S233-13 V51896	950951	1

MISSING ITEM NUMBERS NOT APPLICABLE

— ITEM NOT ILLUSTRATED

BOEING PROPRIETARY - Copyright © - Unpublished Work - See title page for details.

FIG ITEM	PART NUMBER	1 2 3 4 5 6 7 NOMENCLATURE	EFFECT FROM TO	UNITS PER ASSY
30				
250	S233-13	..SEAL-	950951	1
		SUPPLIER CODE:		
		V51896		
		OPTIONAL PART:		
		S233-6		
		V51896		
252	MS35206-202	..SCREW	950951	4
254	NAS514P440-6P	..SCREW	950951	4
256	NAS1801-04-5	..SCREW	950951	2
257	AN960-4L	..WASHER	950951	2
258	92-1660-40	..NUT	950951	2
		SUPPLIER CODE:		
		V72962		
		SPECIFICATION NUMBER:		
		BACN10DN40		
		OPTIONAL PART:		
		92-1660-440		
		V15653		
260	WCS225-7	..SEAL ASSY-SHAFT	950951	2
		SUPPLIER CODE:		
		V51074		
262	285T0530-1	..ENCLOSURE ASSY-	950951	1
		SUPPLIER CODE:		
		V89954		
		OPTIONAL PART:		
		285T0530-2		
		V89954		
262	285T0530-2	..ENCLOSURE ASSY-	950951	1
		SUPPLIER CODE:		
		V89954		
		OPTIONAL PART:		
		285T0530-1		
		V89954		
263	NAS1801-04-5	...SCREW	950951	4
264	NAS514P440-4P	...SCREW	950951	4
265	NAS514P440-5P	...SCREW	950951	12
266	AN960D4	...WASHER	950951	4
268	285T0529-1	...COVER ASSY-SHELL	950951	2
		SUPPLIER CODE:		
		V89954		
270	285T0528-1	...PANEL ASSY-FRONT	950951	1
		SUPPLIER CODE:		
		V89954		
		USED ON:		
		285T0530-1		

MISSING ITEM NUMBERS NOT APPLICABLE

– ITEM NOT ILLUSTRATED

BOEING PROPRIETARY - Copyright © - Unpublished Work - See title page for details.

FIG ITEM	PART NUMBER	1 2 3 4 5 6 7 NOMENCLATURE	EFFECT FROM TO	UNITS PER ASSY
30				
270	285T0528-3	...PANEL ASSY-FRONT SUPPLIER CODE: V89954 USED ON: 285T0530-2	950951	1
271	BACS21DD1B	....STUD ASSY SUPPLIER CODE: V08524 SPECIFICATION NUMBER: BACS21DD1B	950951	4
272	SF6G6CBB5D	....NUT SUPPLIER CODE: V12324 SPECIFICATION NUMBER: BACN10PA06-6	950951	4
274	285T0528-2	....PANEL- SUPPLIER CODE: V89954 USED ON: 285T0528-1	950951	1
274	285T0528-4	....PANEL- SUPPLIER CODE: V89954 USED ON: 285T0528-3	950951	1
276	285T0529-3	...PANEL ASSY-SIDE SUPPLIER CODE: V89954	950951	1
278	285T0529-4	...PANEL ASSY-SIDE SUPPLIER CODE: V89954	950951	1
280	RMF9201M40	....NUTPLATE SUPPLIER CODE: V72962 SPECIFICATION NUMBER: BACN10JN04 OPTIONAL PART: BRFM20A04L V52828 MF1000-04BAC V15653 NS103218-40 V80539 MF53049-04 V15653 T8124S04S V11815 VN252A40L V92215	950951	4

MISSING ITEM NUMBERS NOT APPLICABLE

— ITEM NOT ILLUSTRATED

BOEING PROPRIETARY - Copyright © - Unpublished Work - See title page for details.

FIG ITEM	PART NUMBER	1 2 3 4 5 6 7 NOMENCLATURE	EFFECT FROM TO	UNITS PER ASSY
30				
		ATTACHING PARTS		
- 281	BACR15BA3AD	....RIVET-	950951	8
		SIZE DETERMINED ON INSTL.		
		-------*-------		
282	F22A27M22-40	....NUT-ANCHOR	950951	4
		SUPPLIER CODE:		
		V0217B		
		ATTACHING PARTS		
- 283	BACR15BA2AD	....RIVET-	950951	8
		SIZE DETERMINED ON INSTL.		
		-------*-------		
284	285T0529-5	....PANEL-	950951	1
		SUPPLIER CODE:		
		V89954		
		USED ON:		
		285T0529-3		
286	285T0529-6	....PANEL-	950951	1
		SUPPLIER CODE:		
		V89954		
		USED ON:		
		285T0529-4		
288	285T0527-1	...PANEL-REAR	950951	1
		SUPPLIER CODE:		
		V89954		
290	285T0525-3	..MODULE ASSY-ELECT.	950951	1
		SUPPLIER CODE:		
		V89954		
- 292	285T0525-4	...MODULE ASSY-	950951	1
		SUPPLIER CODE:		
		V89954		
294	285T0250-4	....PMD ASSY-	950951	3
		SUPPLIER CODE:		
		V89954		
296	BAC27TEX2007	.....DECAL-	950951	1
		OPTIONAL PART:		
		WHB673-1D0X0D5		
		V85480		
296	WHB673-1D0X0D5	.....DECAL-	950951	1
		SUPPLIER CODE:		
		V85480		
		OPTIONAL PART:		
		BAC27TEX2007		

MISSING ITEM NUMBERS NOT APPLICABLE

- ITEM NOT ILLUSTRATED

BOEING PROPRIETARY - Copyright © - Unpublished Work - See title page for details.

FIG ITEM	PART NUMBER	1 2 3 4 5 6 7 NOMENCLATURE	EFFECT FROM TO	UNITS PER ASSY
30				
300	285T0020-8	.PANEL ASSY-ILS CONT SUPPLIER CODE: V89954 ELECTRICAL EQUIP NUMBER: M00087 COMPONENT MAINT MANUAL REF: 34-31-51 FOR OTHER SYS DETAILS SEE: 11-31-05-53 33-13-58-01 34-31-02-01	950951	1
302	BAC27TEX0934	..MARKER-ALUMINUM FOIL SUPPLIER CODE: V89954	950951	1
305	S233-2	..SEAL- SUPPLIER CODE: V51896 OPTIONAL PART: S233-9 V51896	950951	1
305	S233-9	..SEAL- SUPPLIER CODE: V51896 OPTIONAL PART: S233-2 V51896	950951	1
306	NAS514P440-4P	..SCREW	950951	10
307	NAS514P440-5P	..SCREW	950951	6
308	285T0082-10	..MODULE ASSY-FRONT SUPPLIER CODE: V89954 OPTIONAL PART: 285T0082-14 V89954	950951	1
308	285T0082-14	..MODULE ASSY-FRONT SUPPLIER CODE: V89954 OPTIONAL PART: 285T0082-10 V89954	950951	1
309	MS35206-202	...SCREW	950951	4
310	WCS225-3	...SEAL ASSY- SUPPLIER CODE: V51074 OPTIONAL PART: WCS225-7 V51074	950951	2

MISSING ITEM NUMBERS NOT APPLICABLE

– ITEM NOT ILLUSTRATED

BOEING PROPRIETARY - Copyright © - Unpublished Work - See title page for details.

FIG ITEM	PART NUMBER	1 2 3 4 5 6 7 NOMENCLATURE	EFFECT FROM TO	UNITS PER ASSY
30				
310	WCS225-7	...SEAL ASSY-	950951	2
		SUPPLIER CODE:		
		V51074		
		OPTIONAL PART:		
		WCS225-3		
		V51074		
312	285T0440-1	...PANEL ASSY-	950951	1
		SUPPLIER CODE:		
		V89954		
		USED ON:		
		285T0082-10		
312	285T0440-22	...PANEL ASSY-	950951	1
		SUPPLIER CODE:		
		V89954		
		USED ON:		
		285T0082-14		
313	NAS514P440-5P	....SCREW	950951	2
314	BACS21DD1B	....STUD ASSY	950951	4
		SUPPLIER CODE:		
		V08524		
		SPECIFICATION NUMBER:		
		BACS21DD1B		
315	92-1660-40	....NUT	950951	2
		SUPPLIER CODE:		
		V72962		
		SPECIFICATION NUMBER:		
		BACN10DN40		
		OPTIONAL PART:		
		92-1660-440		
		V15653		
316	SF6G6CBB5D	....NUT	950951	4
		SUPPLIER CODE:		
		V12324		
		SPECIFICATION NUMBER:		
		BACN10PA06-6		
317	285T0440-5	....PANEL-	950951	1
		SUPPLIER CODE:		
		V89954		
		USED ON:		
		285T0440-1		
317	285T0440-23	....PANEL-	950951	1
		SUPPLIER CODE:		
		V89954		
		USED ON:		
		285T0440-22		
318	285T0438-1	....CHASSIS ASSY-UPR	950951	1
		SUPPLIER CODE:		
		V89954		

MISSING ITEM NUMBERS NOT APPLICABLE

– ITEM NOT ILLUSTRATED

BOEING PROPRIETARY - Copyright © - Unpublished Work - See title page for details.

FIG ITEM	PART NUMBER	1 2 3 4 5 6 7 NOMENCLATURE	EFFECT FROM TO	UNITS PER ASSY
30				
319	F22A27M22-40	.....NUT-ANCHOR SUPPLIER CODE: V0217B ATTACHING PARTS	950951	2
- 320	BACR15BA2AD	.....RIVET- SIZE DETERMINED ON INSTL. -------*-------	950951	4
321	285T0439-3	..PANEL-SIDE SUPPLIER CODE: V89954	950951	1
322	285T0439-4	..PANEL-SIDE SUPPLIER CODE: V89954	950951	1
324	285T0081-10	..MODULE ASSY-REAR SUPPLIER CODE: V89954	950951	1
325	NAS514P440-4P	...SCREW	950951	1
326	NAS514P440-7P	...SCREW	950951	1
327	NAS43DD0-8	...SPACER	950951	1
328	8214B0440HL	...SPACER-THREADED SUPPLIER CODE: V06540	950951	1
329	NAS620-4L	...WASHER	950951	1
330	285T0250-4	...PMD ASSY- SUPPLIER CODE: V89954	950951	3
332	BAC27TEX2007	....DECAL- OPTIONAL PART: WHB673-1D0X0D5 V85480	950951	1
332	WHB673-1D0X0D5	....DECAL- SUPPLIER CODE: V85480 OPTIONAL PART: BAC27TEX2007	950951	1
334	285T0439-1	...CHASSIS ASSY- SUPPLIER CODE: V89954	950951	1
335	NAS1801-04-5	....SCREW	950951	1
336	AN960D4L	....WASHER	950951	3
337	F22A27M22-40	....NUT-ANCHOR SUPPLIER CODE: V0217B ATTACHING PARTS	950951	4
- 338	BACR15BB2AD	....RIVET- SIZE DETERMINED ON INSTL. -------*-------	950951	8

MISSING ITEM NUMBERS NOT APPLICABLE

- ITEM NOT ILLUSTRATED

BOEING PROPRIETARY - Copyright © - Unpublished Work - See title page for details.

FIG ITEM	PART NUMBER	1 2 3 4 5 6 7 NOMENCLATURE	EFFECT FROM TO	UNITS PER ASSY
30				
340	285T0439-6	....BRACKET ASSY- SUPPLIER CODE: V89954	950951	1
342	285T0439-2	....SUPPORT ASSY- SUPPLIER CODE: V89954 ATTACHING PARTS	950951	1
- 344	BACR15BA3AD	....RIVET- SIZE DETERMINED ON INSTL. -------*-------	950951	5
346	RMF9201M40	.....NUTPLATE SUPPLIER CODE: V72962 SPECIFICATION NUMBER: BACN10JN04 OPTIONAL PART: BRFM20A04L V52828 MF1000-04BAC V15653 NS103218-40 V80539 MF53049-04 V15653 T8124S04S V11815 VN252A40L V92215	950951	3
348	T8077S440	.....NUTPLATE SUPPLIER CODE: V11815 SPECIFICATION NUMBER: BACN10JP04B OPTIONAL PART: MK2000-04BAC V15653 NS103198-40 V80539 RMA9207M40 V72962 VN201A1-40L V92215 BRM100A04L V52828 ATTACHING PARTS	950951	1
- 350	BACR15BA3AD	.....RIVET- SIZE DETERMINED ON INSTL. -------*-------	950951	8

MISSING ITEM NUMBERS NOT APPLICABLE

- ITEM NOT ILLUSTRATED

BOEING PROPRIETARY - Copyright © - Unpublished Work - See title page for details.

FIG ITEM	PART NUMBER	1 2 3 4 5 6 7 NOMENCLATURE	EFFECT FROM TO	UNITS PER ASSY
30				
352	285T0439-17	.....SUPPORT- SUPPLIER CODE: V89954	950951	1
354	285T0439-5	....CHASSIS- SUPPLIER CODE: V89954	950951	1
410	233T6201-21	.PANEL ASSY-AIL. RUD TRIM CONT SUPPLIER CODE: V89954 ELECTRICAL EQUIP NUMBER: M00074 COMPONENT MAINT MANUAL REF: 27-21-63 QUALIFIED I/W DATA: THE 233T6201-324 PANEL ASSY IS I/W THE 233T6201-21 PANEL ASSY T/W THE S233T100-528 LIGHTPLATE AND SA808-101 KNOB 233T6201-19 I/W 233T6201-21 EXCEPT FOR ETOPS WHERE 233T6201-21 MUST BE INSTALLED. FOR OTHER SYS DETAILS SEE: 27-11-23-01 27-21-23-01 33-13-58-01	950951	1
410	233T6201-22	.PANEL ASSY-AIL. RUD TRIM CONT SUPPLIER CODE: V89954 ELECTRICAL EQUIP NUMBER: M00074 FOR OTHER SYS DETAILS SEE: 27-11-23-01 27-21-23-01 33-13-58-01	950951	1
415	233T6200-38	..BRACKET-SPRT ATTACHING PARTS	950951	1
- 420	NAS1801-06-5	..SCREW	950951	3
- 425	MS35338-41	..WASHER -------*-------	950951	3
430	NAS514P632-5	..SCREW	950951	7
435	69B46200-7	..STANDOFF	950951	3
440	233T6201-20	..SHROUD ASSY- SUPPLIER CODE: V89954	950951	1

MISSING ITEM NUMBERS NOT APPLICABLE

- ITEM NOT ILLUSTRATED

BOEING PROPRIETARY - Copyright © - Unpublished Work - See title page for details.

FIG ITEM	PART NUMBER	1 2 3 4 5 6 7 NOMENCLATURE	EFFECT FROM TO	UNITS PER ASSY
30				
442	MF6001-06	...NUTPLATE SUPPLIER CODE: V15653 SPECIFICATION NUMBER: BACN10KJ06CM ATTACHING PARTS	950951	4
- 444	BACR15BA3AD	...RIVET- SIZE DETERMINED ON INSTL. -------*-------	950951	8
445	233T6201-15	..BASEPLATE ASSY- SUPPLIER CODE: V89954	950951	1
450	BACS21DD1B	...STUD ASSY SUPPLIER CODE: V08524 SPECIFICATION NUMBER: BACS21DD1B	950951	4
453	SF6G6CBB5D	...NUT SUPPLIER CODE: V12324 SPECIFICATION NUMBER: BACN10PA06-6	950951	3
456	233T6201-16	...BASEPLATE- SUPPLIER CODE: V89954	950951	1
460	362-021-002	.INDICATOR ASSY-RUD TRIM SUPPLIER CODE: V26055 FUNCTIONAL DESCRIPTION: DISPLAYS RUDDER TRIM POSITION AS NOSE LEFT AND RIGHT UNITS SPECIFICATION NUMBER: S231T282-2 ELECTRICAL EQUIP NUMBER: N00083 COMPONENT MAINT MANUAL REF: 27-20-01 FOR BREAKDOWN SEE: 27-28-02-01	950951	RF

MISSING ITEM NUMBERS NOT APPLICABLE

- ITEM NOT ILLUSTRATED

BOEING PROPRIETARY - Copyright © - Unpublished Work - See title page for details.

FIG ITEM	PART NUMBER	1 2 3 4 5 6 7 NOMENCLATURE	EFFECT FROM TO	UNITS PER ASSY
30				
510	233N6203-161	.PANEL ASSY-APU/CARGO FIRE CONT SUPPLIER CODE: V89954 ELECTRICAL EQUIP NUMBER: M10444 COMPONENT MAINT MANUAL REF: 26-15-51 QUALIFIED I/W DATA: THE 233N6203-301 PANEL ASSY IS I/W THE 233N6203-161 PANEL ASSY T/W THE S233T100-573 LIGHTPLATE. 233N6203-9/-23/-45/-104/-105/-161 ARE ALL INTERCHANGEABLE EXCEPT SUBJECT TO CUSTOMER PREFERENCE PRE ALERT SB: 33A0044 FOR OTHER SYS DETAILS SEE: 26-22-03-01 26-23-52-02 33-13-58-01	950951	1
510	233N6203-103	.PANEL ASSY-APU/CARGO FIRE CONT SUPPLIER CODE: V89954 ELECTRICAL EQUIP NUMBER: M10444 COMPONENT MAINT MANUAL REF: 26-15-51 QUALIFIED I/W DATA: 233N6203-9 -23 -45 -103 -104 -105 ARE ALL I/W EXCEPT SUBJECT TO CUSTOMER PREFERENCE PRE ALERT SB: 33A0044 FOR OTHER SYS DETAILS SEE: 26-22-03-02 26-23-52-02 33-13-58-01	950951	1

MISSING ITEM NUMBERS NOT APPLICABLE

– ITEM NOT ILLUSTRATED

BOEING PROPRIETARY - Copyright © - Unpublished Work - See title page for details.

FIG ITEM	PART NUMBER	1 2 3 4 5 6 7 NOMENCLATURE	EFFECT FROM TO	UNITS PER ASSY
30				
510	233N6203-1161	.PANEL ASSY-APU/CARGO FIRE CONT SUPPLIER CODE: V89954 ELECTRICAL EQUIP NUMBER: M10444 COMPONENT MAINT MANUAL REF: 26-15-51 POST ALERT SB: 33A0044 FOR OTHER SYS DETAILS SEE: 26-22-03-02 26-23-52-02 33-13-58-01	950951	1
510	233N6203-1103	.PANEL ASSY-APU/CARGO FIRE CONT SUPPLIER CODE: V89954 ELECTRICAL EQUIP NUMBER: M10444 COMPONENT MAINT MANUAL REF: 26-15-51 POST ALERT SB: 33A0044 FOR OTHER SYS DETAILS SEE: 26-22-03-02 26-23-52-02 33-13-58-01	950951	1
513	NAS1801-06-5	..SCREW	950951	4
516	MS35338-41	..WASHER	950951	4
520	233N6203-2	..BASEPLATE ASSY- SUPPLIER CODE: V89954 ATTACHING PARTS	950951	1
- 525	NAS514P632-5	..SCREW -------*-------	950951	4
530	SF6G6CBB5D	...NUT SUPPLIER CODE: V12324 SPECIFICATION NUMBER: BACN10PA06-6	950951	3
535	PFSC35-38ASEMB	...STUD ASSY- SUPPLIER CODE: V72794 SPECIFICATION NUMBER: BACS21DX1B	950951	4
540	233N6203-3	...BASEPLATE- SUPPLIER CODE: V89954	950951	1

MISSING ITEM NUMBERS NOT APPLICABLE

- ITEM NOT ILLUSTRATED

BOEING PROPRIETARY - Copyright © - Unpublished Work - See title page for details.

FIG ITEM	PART NUMBER	1 2 3 4 5 6 7 NOMENCLATURE	EFFECT FROM TO	UNITS PER ASSY
30				
545	69B46200-15	..STANDOFF	950951	4
548	233N6203-6	..BRACKET ASSY-	950951	RF
		SUPPLIER CODE:		
		V89954		
550	BACP10U0037T	.PANEL ASSY	950951	1
555	9X2334873-1	.PANEL ASSY-VOICE AUTO	950951	1
		SWITCH		
		SUPPLIER CODE:		
		V8B250		
		ELECTRICAL EQUIP NUMBER:		
		M10967		
		POST AIRLINE MOD:		
		E.0.2393R154		
		VALP		
		FOR BREAKDOWN SEE:		
		23-22-05-01		
560	BACP10U0187T	.PANEL ASSY	950951	1
570	285T0553-4	.PANEL ASSY-ILS CONT	950951	1
		SUPPLIER CODE:		
		V89954		
		ELECTRICAL EQUIP NUMBER:		
		M00087		
		COMPONENT MAINT MANUAL REF:		
		34-31-61		
		FOR OTHER SYS DETAILS SEE:		
		11-31-05-53		
		33-13-58-01		
		34-31-02-01		
570	285T0553-1	.PANEL ASSY-ILS CONT	950951	1
		SUPPLIER CODE:		
		V89954		
		ELECTRICAL EQUIP NUMBER:		
		M00087		
		COMPONENT MAINT MANUAL REF:		
		34-31-61		
		FOR OTHER SYS DETAILS SEE:		
		11-31-05-53		
		33-13-58-01		
		34-31-02-01		

MISSING ITEM NUMBERS NOT APPLICABLE

– ITEM NOT ILLUSTRATED

BOEING PROPRIETARY - Copyright © - Unpublished Work - See title page for details.

FIG ITEM	PART NUMBER	1 2 3 4 5 6 7 NOMENCLATURE	EFFECT FROM TO	UNITS PER ASSY
30				
570	285T0553-2	.PANEL ASSY-ILS CONT SUPPLIER CODE: V89954 ELECTRICAL EQUIP NUMBER: M00087 COMPONENT MAINT MANUAL REF: 34-31-61 FOR OTHER SYS DETAILS SEE: 11-31-05-53 33-13-58-01 34-31-02-01	950951	1
570	285T0553-3	.PANEL ASSY-ILS CONT SUPPLIER CODE: V89954 ELECTRICAL EQUIP NUMBER: M00087 FOR OTHER SYS DETAILS SEE: 11-31-05-53 33-13-58-01 34-31-02-01	950951	1
574	BAC27TEX3465	..MARKER-ALUMINUM FOIL SUPPLIER CODE: V89954 QUALIFIED OPTIONAL DATA: BAC27TEX3465 OR BAC27TEX4173 OR BAC27TEX4812 ARE ALL OPT WHEN USED WITH ASSOCIATED PARTS USED ON: 285T0553-4	950951	1
574	BAC27TEX3465	..MARKER-ALUMINUM FOIL SUPPLIER CODE: V89954 USED ON: 285T0553-1 285T0553-2 285T0553-3	950951	1
578	BAC27TEX4173	..MARKER-ALUMINUM FOIL SUPPLIER CODE: V89954 QUALIFIED OPTIONAL DATA: BAC27TEX3465 OR BAC27TEX4173 OR BAC27TEX4812 ARE ALL OPT WHEN USED WITH ASSOCIATED PARTS USED ON: 285T0553-4	950951	1

MISSING ITEM NUMBERS NOT APPLICABLE

– ITEM NOT ILLUSTRATED

BOEING PROPRIETARY - Copyright © - Unpublished Work - See title page for details.

FIG ITEM	PART NUMBER	1 2 3 4 5 6 7 NOMENCLATURE	EFFECT FROM TO	UNITS PER ASSY
30				
582	BAC27TEX4812	..MARKER-ALUMINUM FOIL SUPPLIER CODE: V89954 QUALIFIED OPTIONAL DATA: BAC27TEX3465 OR BAC27TEX4173 OR BAC27TEX4812 ARE ALL OPT WHEN USED WITH ASSOCIATED PARTS USED ON: 285T0553-4	950951	1
586	MS35206-202	..SCREW	950951	4
590	NAS514P440-4P	..SCREW	950951	4
594	NAS514P440-5P	..SCREW	950951	12
598	NAS1801-04-5	..SCREW	950951	12
602	MS35338-40	..WASHER	950951	8
606	AN960-4L	..WASHER	950951	8
610	WCS225-7	..SEAL ASSY-SHAFT SUPPLIER CODE: V51074	950951	2
614	285T0580-1	..GASKET-LCD MODULE SUPPLIER CODE: V89954 QUALIFIED OPTIONAL DATA: 285T0580-1 OPT TO 285T0580-2 WHEN USED WITH ASSOCIATED PARTS USED ON: 285T0553-4	950951	2
614	285T0580-1	..GASKET-LCD MODULE SUPPLIER CODE: V89954 USED ON: 285T0553-1 285T0553-2 285T0553-3	950951	2
614	285T0580-2	..GASKET ASSY-LCD MODULE SUPPLIER CODE: V89954 QUALIFIED OPTIONAL DATA: 285T0580-1 OPT TO 285T0580-2 WHEN USED WITH ASSOCIATED PARTS USED ON: 285T0553-4	950951	2

MISSING ITEM NUMBERS NOT APPLICABLE

– ITEM NOT ILLUSTRATED

BOEING PROPRIETARY - Copyright © - Unpublished Work - See title page for details.

FIG ITEM	PART NUMBER	1 2 3 4 5 6 7 NOMENCLATURE	EFFECT FROM TO	UNITS PER ASSY
30				
618	285T1151-1	..GASKET- SUPPLIER CODE: V89954 QUALIFIED OPTIONAL DATA: 285T1151-1 OPT TO 285T1151-2 WHEN USED WITH ASSOCIATED PARTS USED ON: 285T0553-4	950951	2
618	285T1151-2	..GASKET- SUPPLIER CODE: V89954 QUALIFIED OPTIONAL DATA: 285T1151-1 OPT TO 285T1151-2 WHEN USED WITH ASSOCIATED PARTS USED ON: 285T0553-4	950951	2
622	285T0549-1	..COVER ASSY- SUPPLIER CODE: V89954	950951	2
626	285T0548-1	..PANEL ASSY-FRONT SUPPLIER CODE: V89954	950951	1
630	BACS21DD1B	...STUD ASSY SUPPLIER CODE: V08524 SPECIFICATION NUMBER: BACS21DD1B	950951	4
634	SF6G6CBB5D	...NUT SUPPLIER CODE: V12324 SPECIFICATION NUMBER: BACN10PA06-6	950951	2
638	U256-1	...NUT-PRESS SUPPLIER CODE: V46384	950951	8
642	285T0548-11	...PANEL- SUPPLIER CODE: V89954	950951	1
646	285T0550-13	..PANEL ASSY-SIDE SUPPLIER CODE: V89954 OPTIONAL PART: 285T0550-1 V89954 285T0550-9 V89954	950951	1

MISSING ITEM NUMBERS NOT APPLICABLE

— ITEM NOT ILLUSTRATED

BOEING PROPRIETARY - Copyright © - Unpublished Work - See title page for details.

FIG ITEM	PART NUMBER	1 2 3 4 5 6 7 NOMENCLATURE	EFFECT FROM TO	UNITS PER ASSY
30				
646	285T0550-9	..PANEL ASSY-SIDE SUPPLIER CODE: V89954 OPTIONAL PART: 285T0550-1 V89954 285T0550-13 V89954	950951	1
646	285T0550-1	..PANEL ASSY-SIDE SUPPLIER CODE: V89954 OPTIONAL PART: 285T0550-9 V89954 285T0550-13 V89954	950951	1
650	285T0550-14	..PANEL ASSY-SIDE SUPPLIER CODE: V89954 OPTIONAL PART: 285T0550-2 V89954 285T0550-10 V89954	950951	1
650	285T0550-10	..PANEL ASSY-SIDE SUPPLIER CODE: V89954 OPTIONAL PART: 285T0550-2 V89954 285T0550-14 V89954	950951	1
650	285T0550-2	..PANEL ASSY-SIDE SUPPLIER CODE: V89954 OPTIONAL PART: 285T0550-10 V89954 285T0550-14 V89954	950951	1
654	F22A27M22-40	...NUT-ANCHOR SUPPLIER CODE: V0217B ATTACHING PARTS	950951	2
- 658	BACR15BA2AD	...RIVET- SIZE DETERMINED ON INSTL. -------*-------	950951	4

MISSING ITEM NUMBERS NOT APPLICABLE

- ITEM NOT ILLUSTRATED

BOEING PROPRIETARY - Copyright © - Unpublished Work - See title page for details.

FIG ITEM	PART NUMBER	1 2 3 4 5 6 7 NOMENCLATURE	EFFECT FROM TO	UNITS PER ASSY
30				
662	FE0440EF	...NUT-PRESS SUPPLIER CODE: V46384	950951	2
666	FE0440EF	...NUT-PRESS SUPPLIER CODE: V46384 USED ON: 285T0550-9 285T0550-13 285T0550-10 285T0550-14	950951	4
666	FE0X440	...NUT-PRESS SUPPLIER CODE: V46384 USED ON: 285T0550-1 285T0550-2	950951	4
670	LAC440-1	...NUT-PRESS SUPPLIER CODE: V46384 USED ON: 285T0550-1 285T0550-9 285T0550-2 285T0550-10	950951	4
674	BACN10XR04	...NUTPLATE- USED ON: 285T0550-13 285T0550-14 ATTACHING PARTS	950951	4
- 678	BACR15BA2AD	...RIVET- SIZE DETERMINED ON INSTL. -------*-------	950951	8
682	285T0550-17	...PANEL- SUPPLIER CODE: V89954 USED ON: 285T0550-13	950951	1
682	285T0550-5	...PANEL- SUPPLIER CODE: V89954 USED ON: 285T0550-1 285T0550-9	950951	1
686	285T0550-18	...PANEL- SUPPLIER CODE: V89954 USED ON: 285T0550-14	950951	1

MISSING ITEM NUMBERS NOT APPLICABLE

- ITEM NOT ILLUSTRATED

BOEING PROPRIETARY - Copyright © - Unpublished Work - See title page for details.

FIG ITEM	PART NUMBER	1 2 3 4 5 6 7 NOMENCLATURE	EFFECT FROM TO	UNITS PER ASSY
30				
686	285T0550-6	...PANEL- SUPPLIER CODE: V89954 USED ON: 285T0550-2 285T0550-10	950951	1
690	285T0558-3	..MODULE ASSY-ELECT. SUPPLIER CODE: V89954 QUALIFIED OPTIONAL DATA: 285T0558-3 OPT TO 285T0558-10 WHEN USED WITH ASSOCIATED PARTS USED ON: 285T0553-4	950951	1
690	285T0558-10	..MODULE ASSY-ELECT. SUPPLIER CODE: V89954 QUALIFIED OPTIONAL DATA: 285T0558-3 OPT TO 285T0558-10 WHEN USED WITH ASSOCIATED PARTS USED ON: 285T0553-4	950951	1
690	285T0558-1	..MODULE ASSY-ELECT. SUPPLIER CODE: V89954 USED ON: 285T0553-4	950951	1
690	285T0558-2	..MODULE ASSY-ELECT. SUPPLIER CODE: V89954 USED ON: 285T0553-4	950951	1
690	285T0558-1	..MODULE ASSY-ELECT. SUPPLIER CODE: V89954 USED ON: 285T0553-1 285T0553-3	950951	1
690	285T0558-2	..MODULE ASSY-ELECT. SUPPLIER CODE: V89954 QUALIFIED OPTIONAL DATA: 285T0558-2 OPT TO 285T0558-9 WHEN USED WITH ASSOCIATED PARTS USED ON: 285T0553-2	950951	1

MISSING ITEM NUMBERS NOT APPLICABLE

– ITEM NOT ILLUSTRATED

BOEING PROPRIETARY - Copyright © - Unpublished Work - See title page for details.

FIG ITEM	PART NUMBER	1 2 3 4 5 6 7 NOMENCLATURE	EFFECT FROM TO	UNITS PER ASSY
30				
690	285T0558-9	..MODULE ASSY-ELECT. SUPPLIER CODE: V89954 QUALIFIED OPTIONAL DATA: 285T0558-2 OPT TO 285T0558-9 WHEN USED WITH ASSOCIATED PARTS USED ON: 285T0553-2	950951	1
690	285T0558-1	..MODULE ASSY-ELECT. SUPPLIER CODE: V89954 USED ON: 285T0553-2	950951	1
694	285T0566-1	...PMD ASSY- SUPPLIER CODE: V89954	950951	3
698	BAC27TEX2007	....DECAL- OPTIONAL PART: WHB673-1-0X0-5 V85480 DAT59-652 V85480	950951	1
698	WHB673-1-0X0-5	....DECAL- SUPPLIER CODE: V85480 OPTIONAL PART: BAC27TEX2007 DAT59-652 V85480	950951	1
698	DAT59-652	....DECAL- SUPPLIER CODE: V85480 OPTIONAL PART: BAC27TEX2007 WHB673-1-0X0-5 V85480	950951	1
702	285T0546-1	..PANEL-REAR SUPPLIER CODE: V89954	950951	1

MISSING ITEM NUMBERS NOT APPLICABLE

– ITEM NOT ILLUSTRATED

BOEING PROPRIETARY - Copyright © - Unpublished Work - See title page for details.

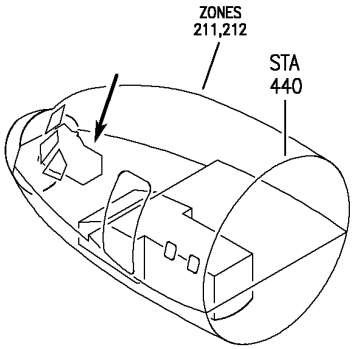

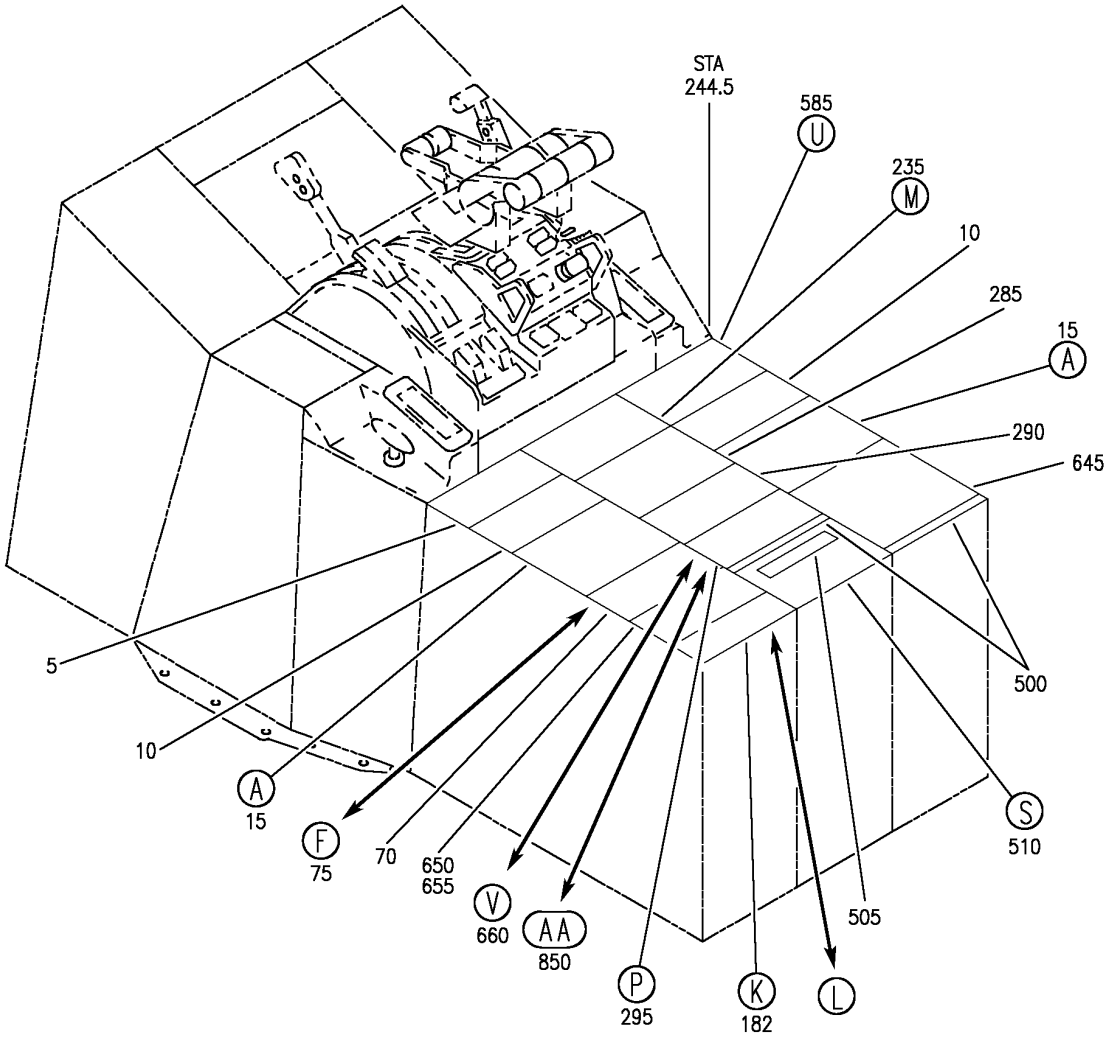

PANEL INSTL-P8 ELECTRONICS (CONTROL STAND AFT ELECTRONIC PANEL ONLY)
FIGURE 55 (SHEET 1)

BOEING PROPRIETARY - Copyright © - Unpublished Work - See title page for details.

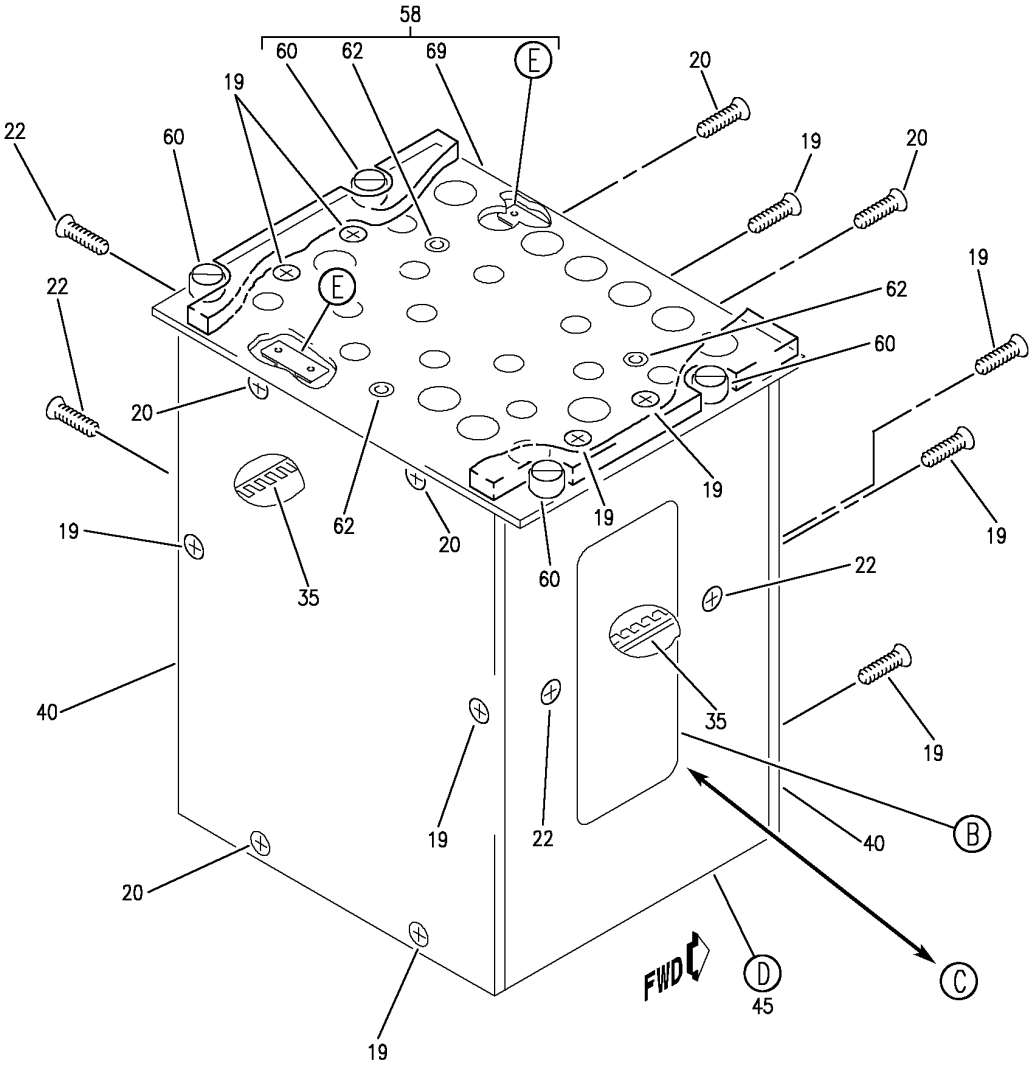

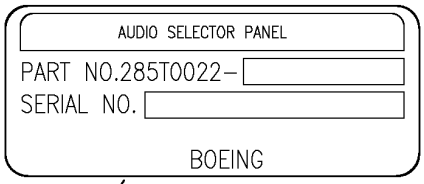

C

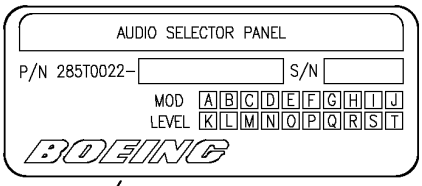

B

Y 31113655 SHT 2 REV 258

PANEL INSTL-P8 ELECTRONICS (CONTROL STAND AFT ELECTRONIC PANEL ONLY)
FIGURE 55 (SHEET 2)

BOEING PROPRIETARY - Copyright © - Unpublished Work - See title page for details.

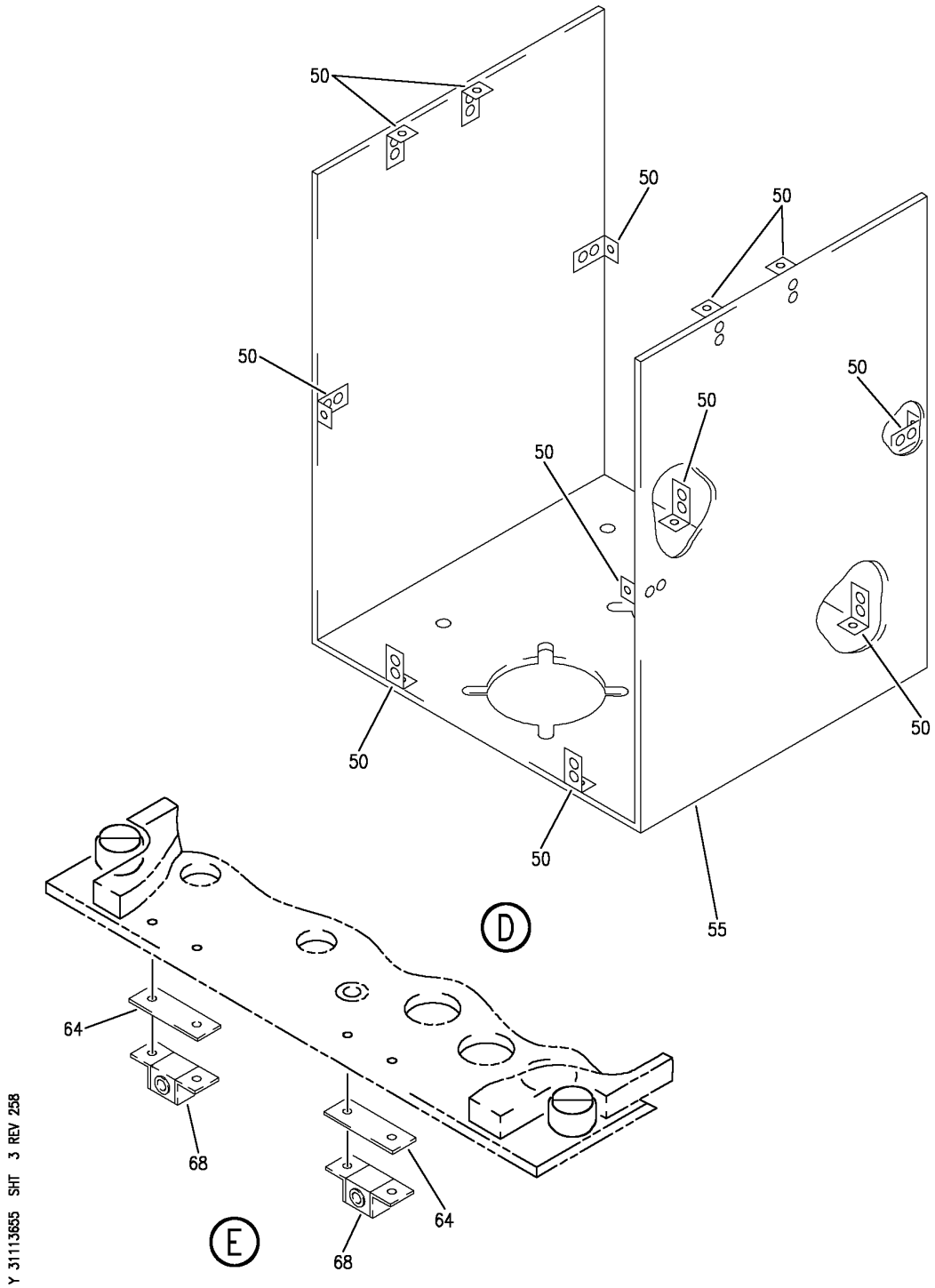

PANEL INSTL-P8 ELECTRONICS (CONTROL STAND AFT ELECTRONIC PANEL ONLY)
FIGURE 55 (SHEET 3)

BOEING PROPRIETARY - Copyright © - Unpublished Work - See title page for details.

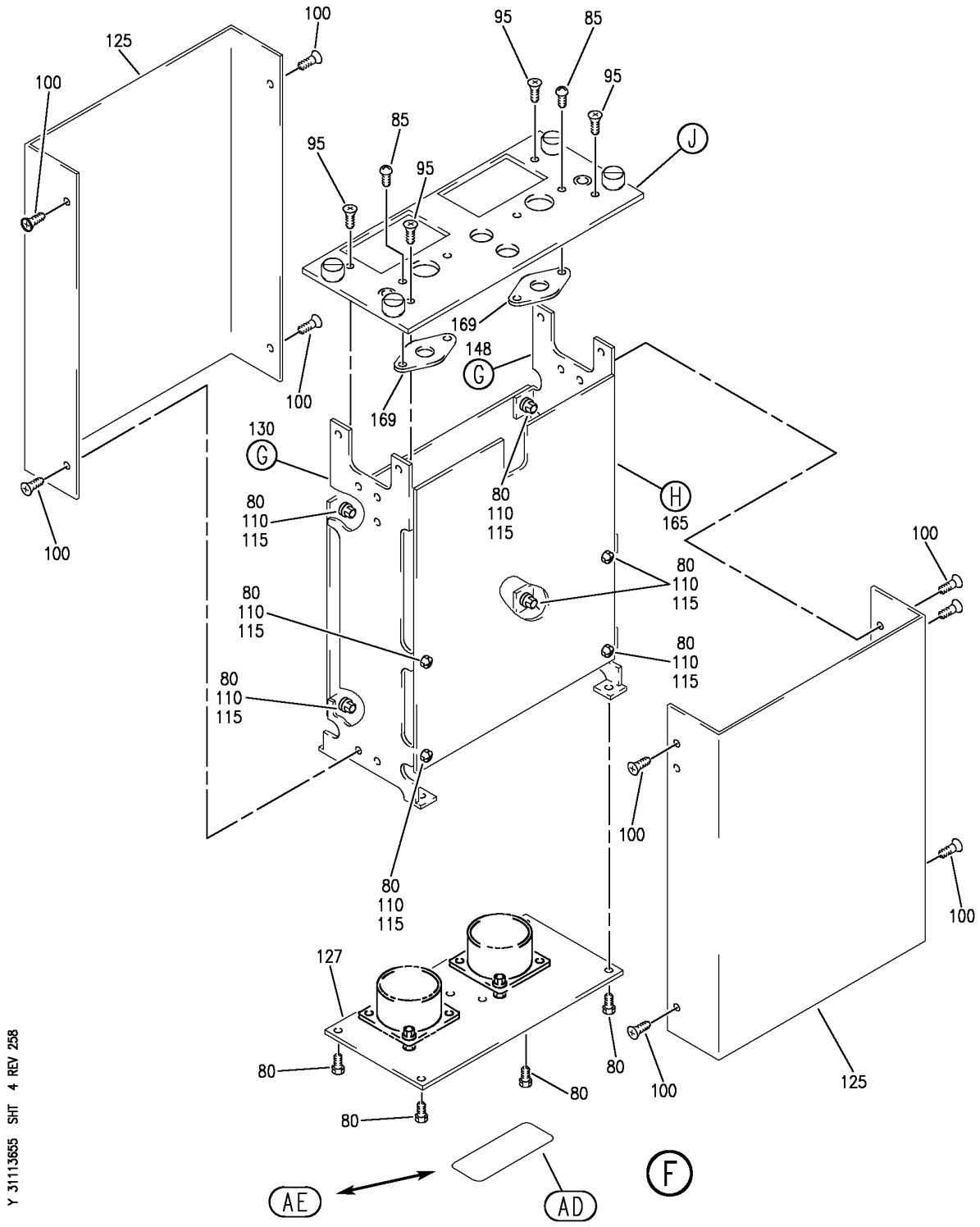

PANEL INSTL-P8 ELECTRONICS (CONTROL STAND AFT ELECTRONIC PANEL ONLY)
FIGURE 55 (SHEET 4)

BOEING PROPRIETARY - Copyright © - Unpublished Work - See title page for details.

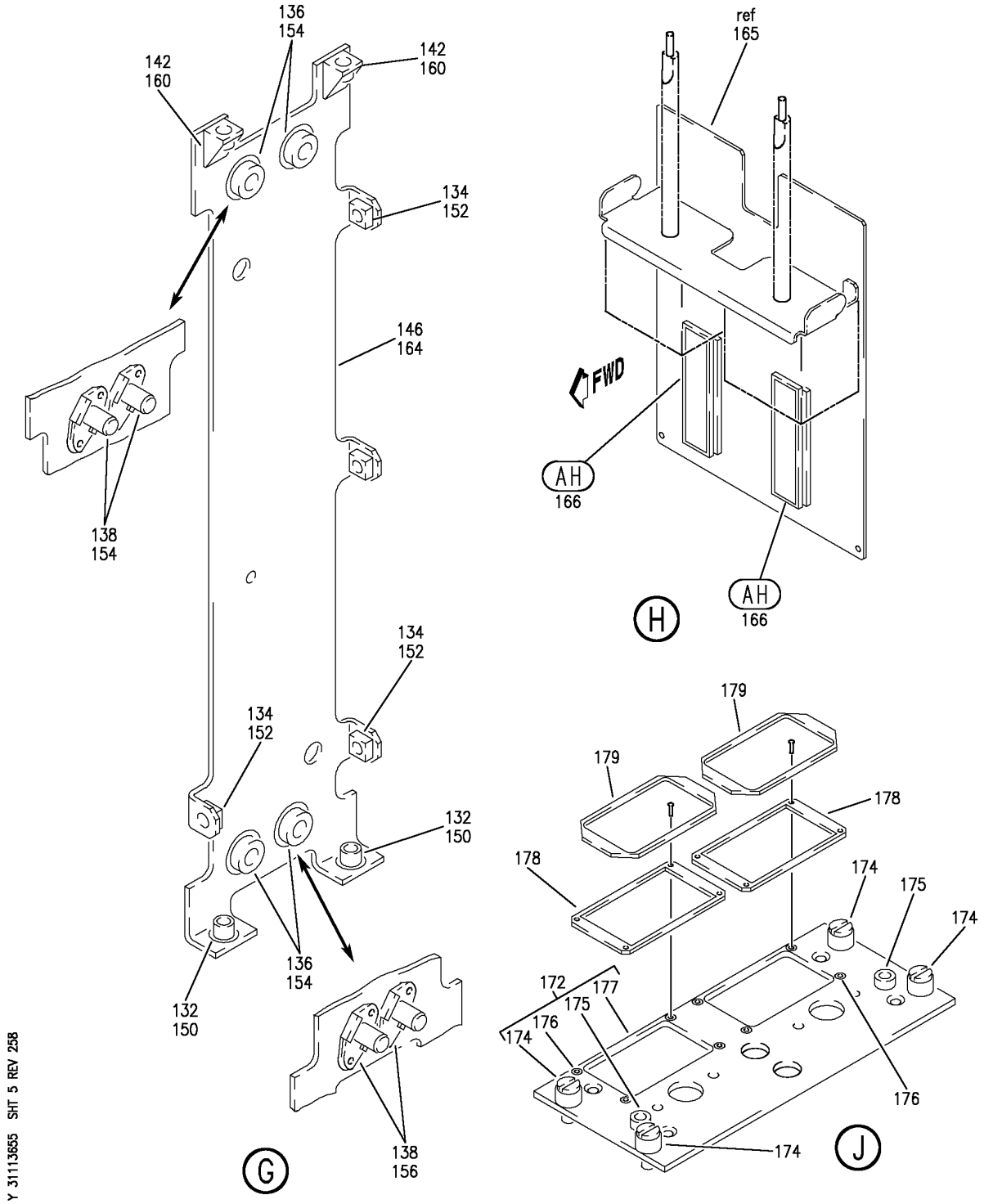

PANEL INSTL-P8 ELECTRONICS (CONTROL STAND AFT ELECTRONIC PANEL ONLY)
FIGURE 55 (SHEET 5)

BOEING PROPRIETARY - Copyright © - Unpublished Work - See title page for details.

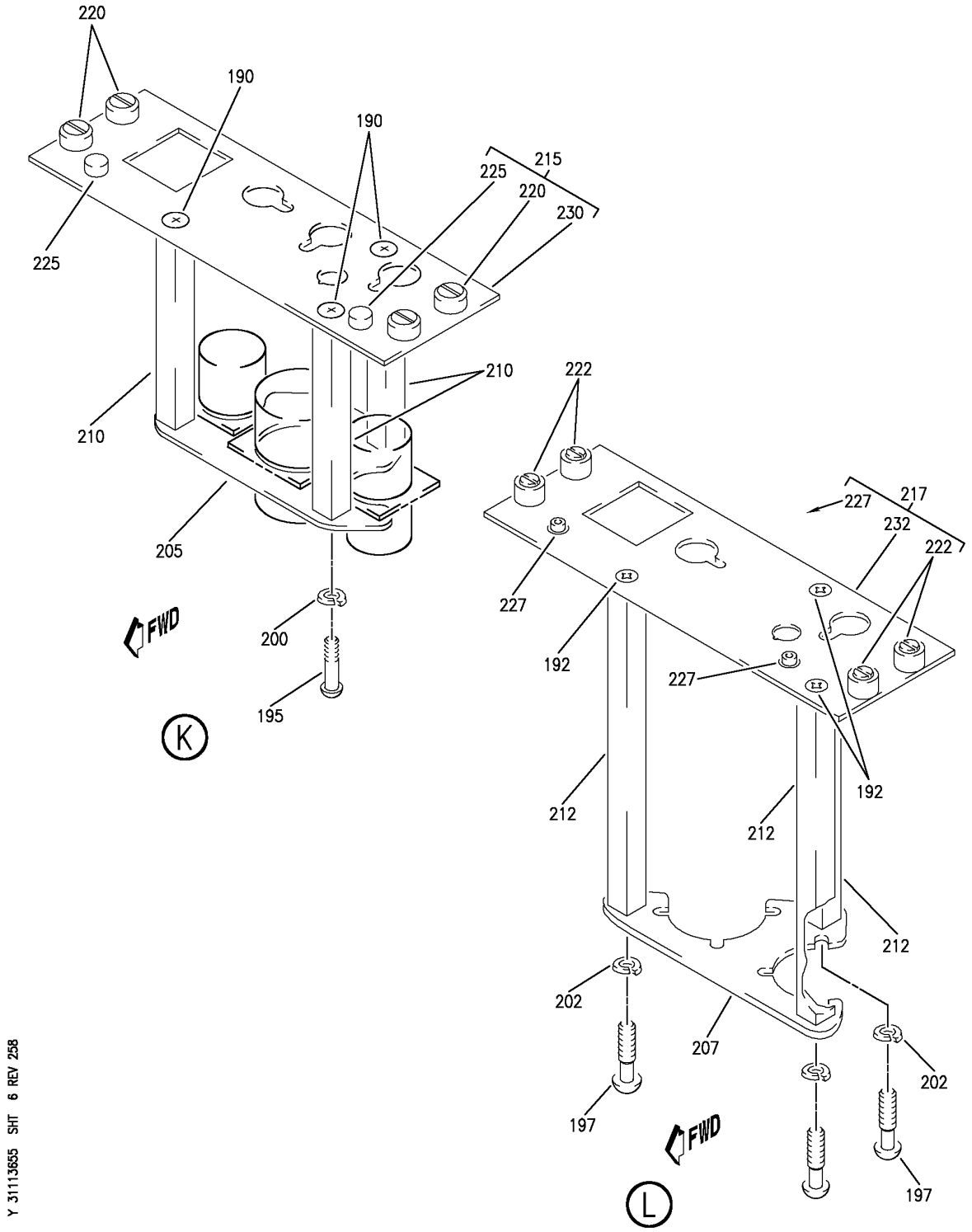

PANEL INSTL-P8 ELECTRONICS (CONTROL STAND AFT ELECTRONIC PANEL ONLY)
FIGURE 55 (SHEET 6)

BOEING PROPRIETARY - Copyright © - Unpublished Work - See title page for details.

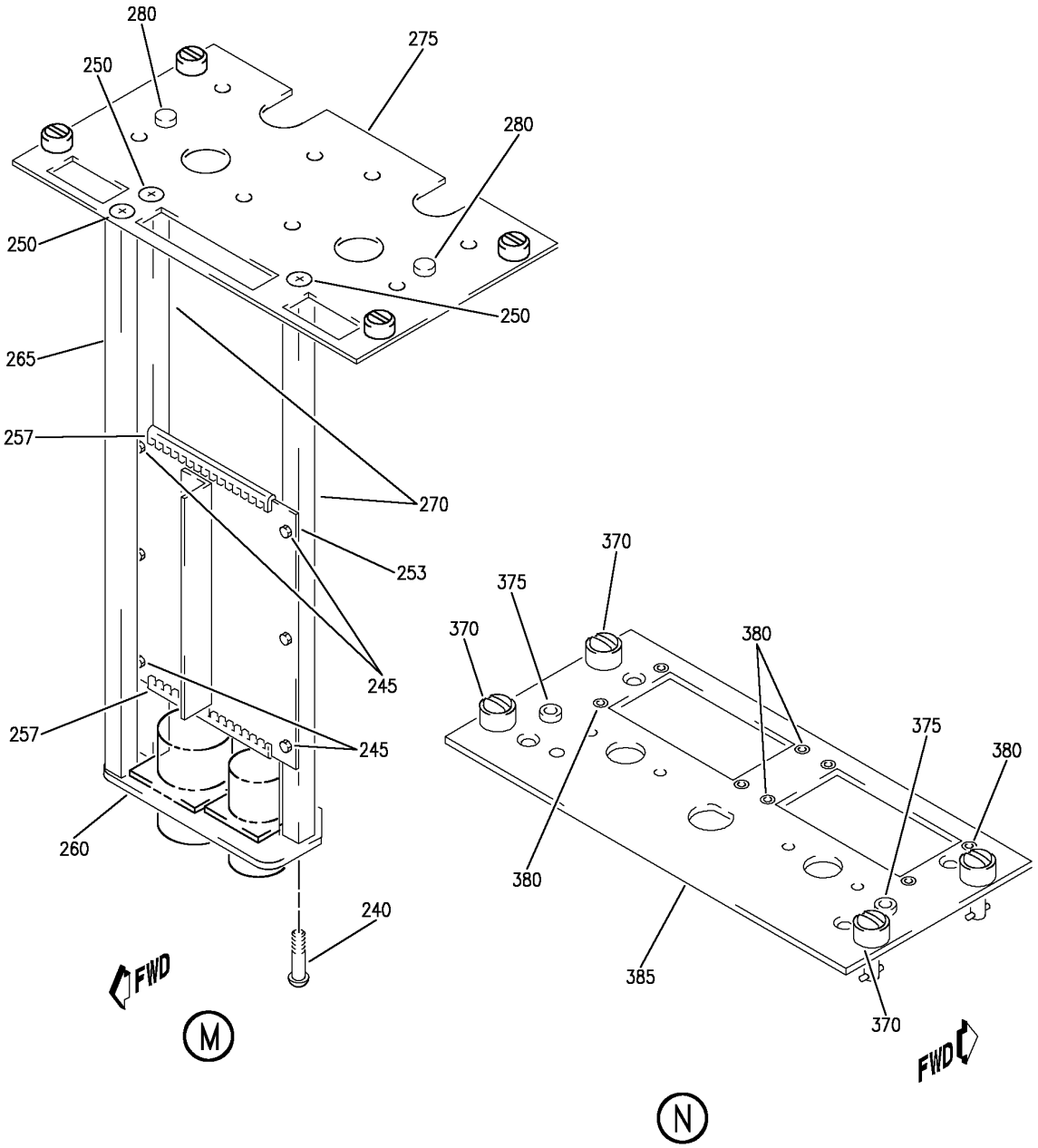

PANEL INSTL-P8 ELECTRONICS (CONTROL STAND AFT ELECTRONIC PANEL ONLY)
FIGURE 55 (SHEET 7)

BOEING PROPRIETARY - Copyright © - Unpublished Work - See title page for details.

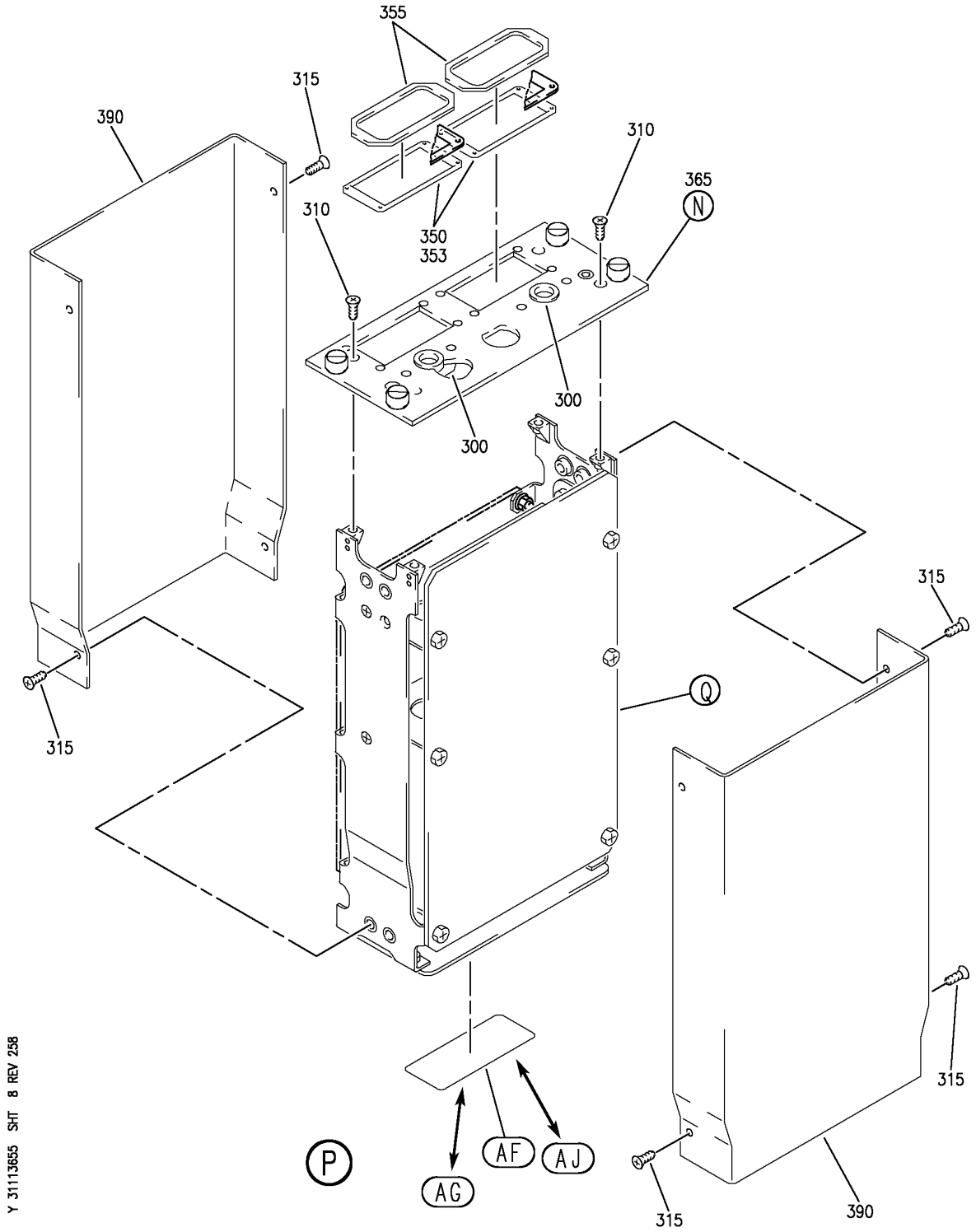

PANEL INSTL-P8 ELECTRONICS (CONTROL STAND AFT ELECTRONIC PANEL ONLY)
FIGURE 55 (SHEET 8)

BOEING PROPRIETARY - Copyright © - Unpublished Work - See title page for details.

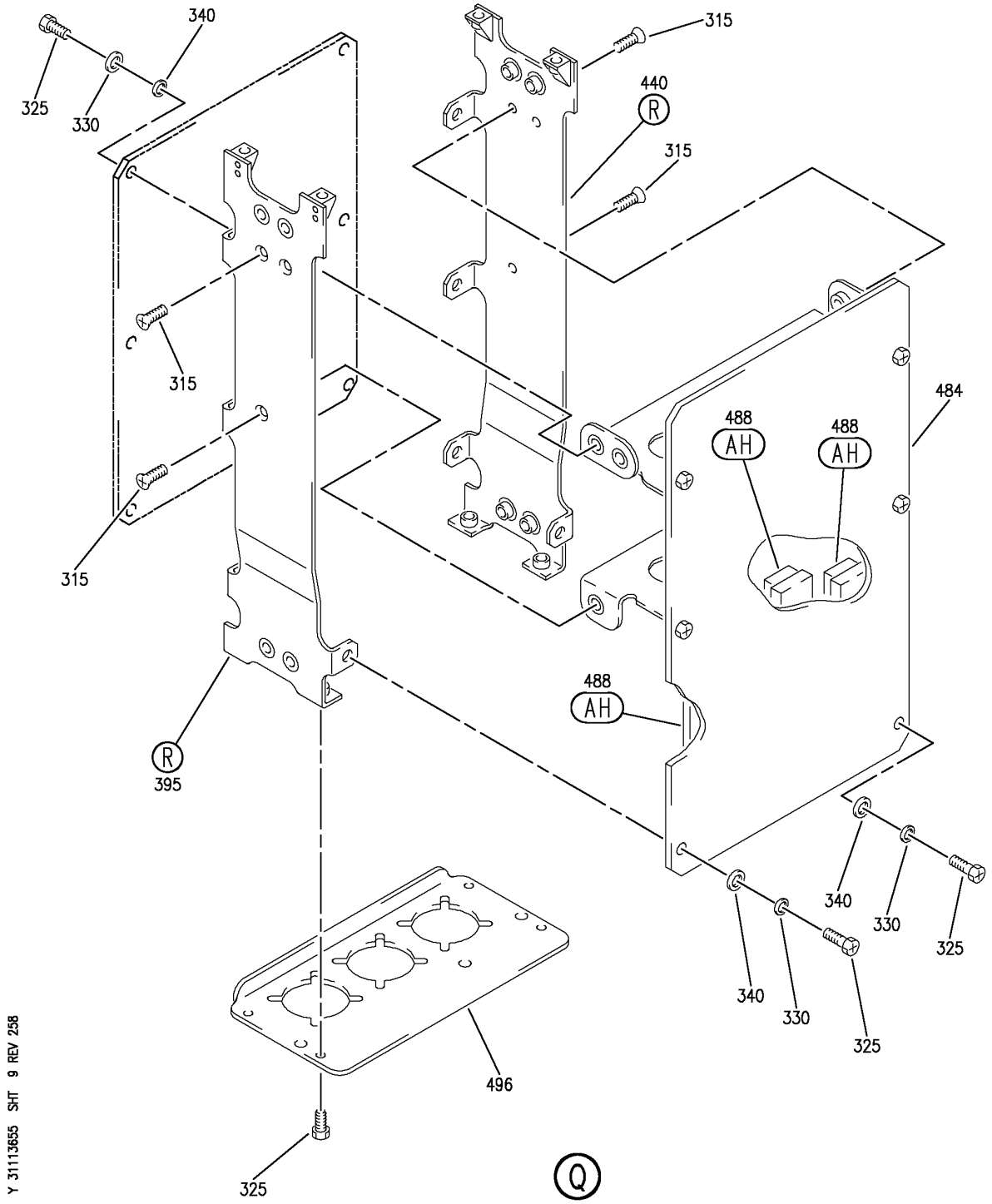

PANEL INSTL-P8 ELECTRONICS (CONTROL STAND AFT ELECTRONIC PANEL ONLY)
FIGURE 55 (SHEET 9)

BOEING PROPRIETARY - Copyright © - Unpublished Work - See title page for details.

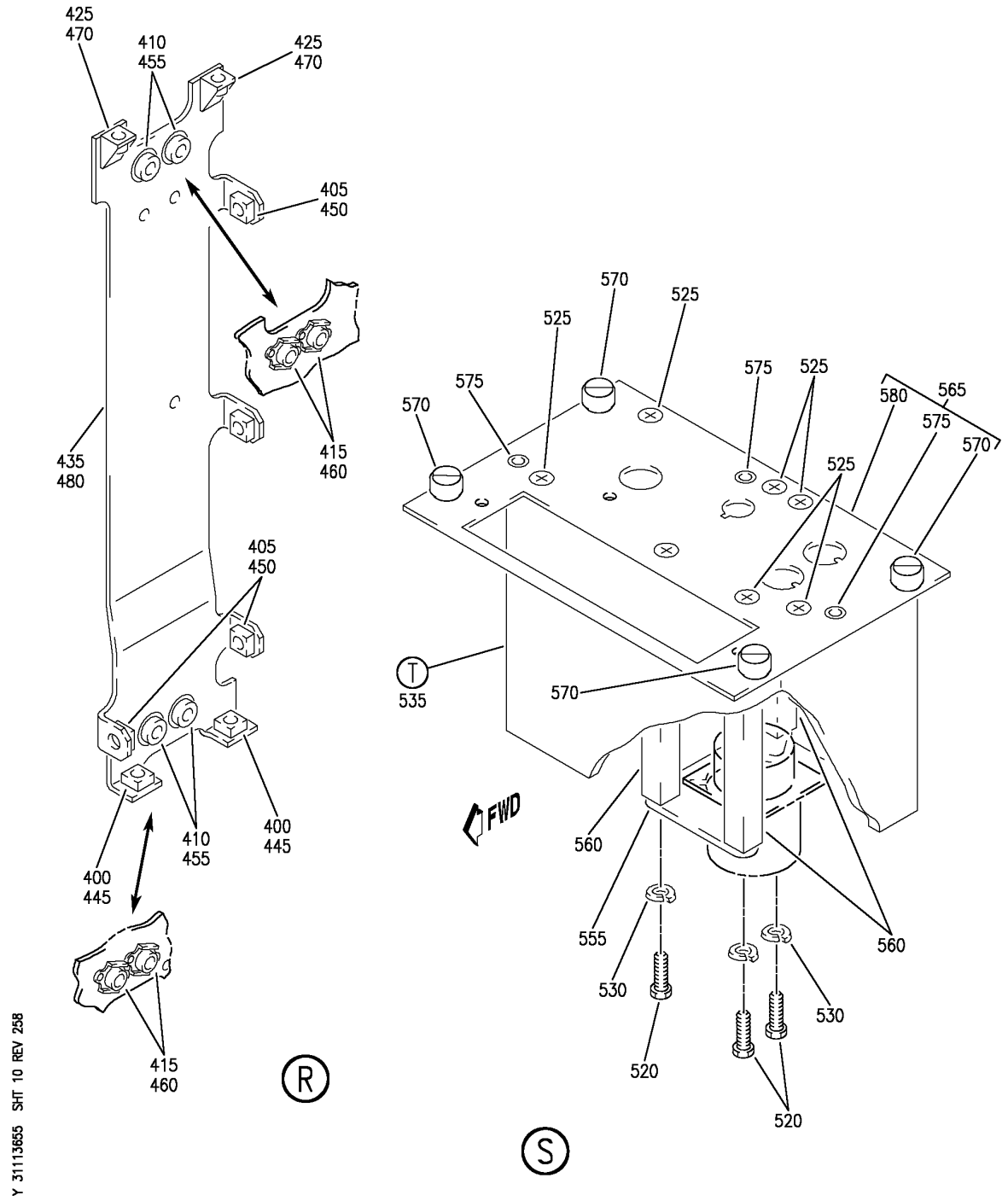

PANEL INSTL-P8 ELECTRONICS (CONTROL STAND AFT ELECTRONIC PANEL ONLY)
FIGURE 55 (SHEET 10)

BOEING PROPRIETARY - Copyright © - Unpublished Work - See title page for details.

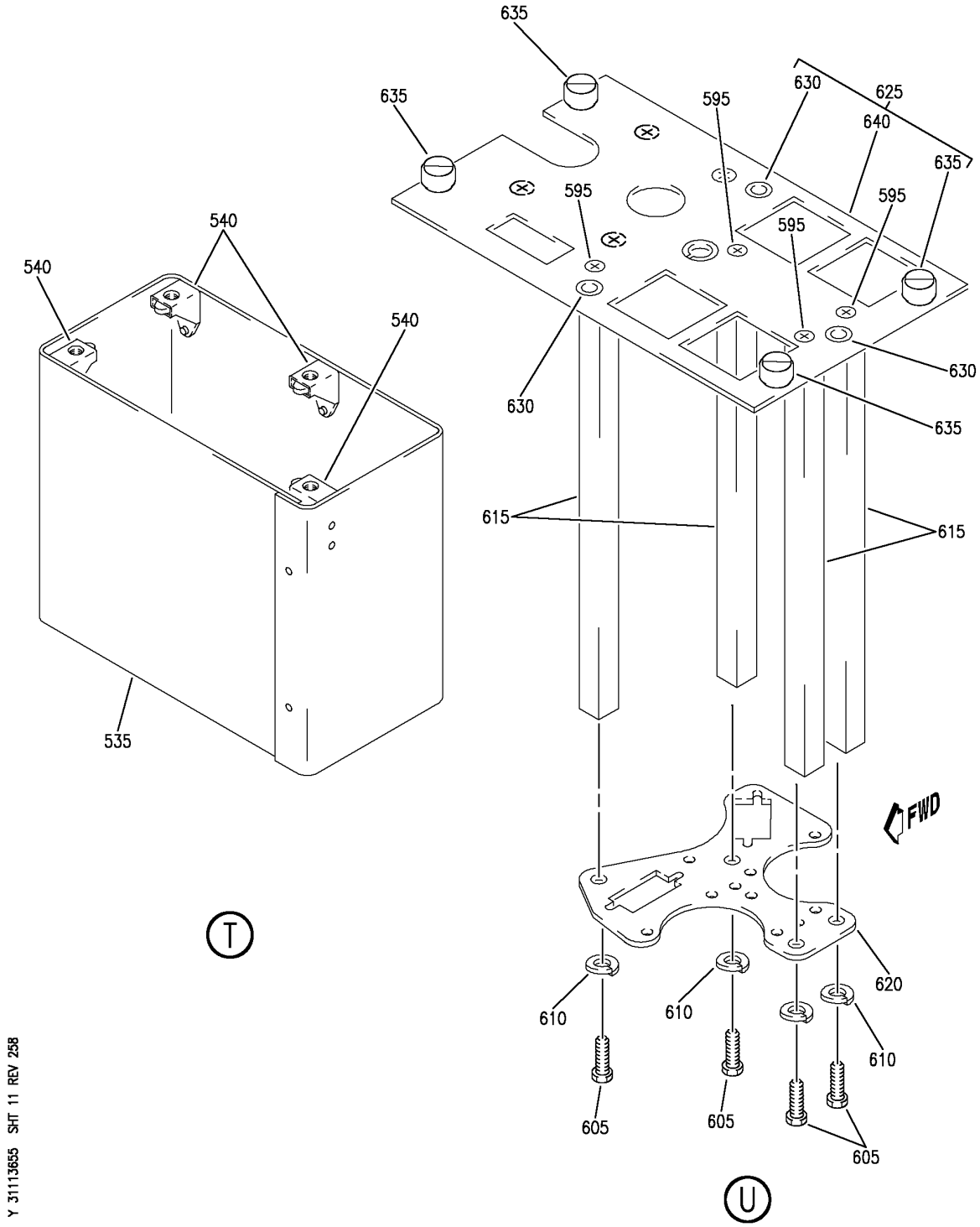

PANEL INSTL-P8 ELECTRONICS (CONTROL STAND AFT ELECTRONIC PANEL ONLY)
FIGURE 55 (SHEET 11)

BOEING PROPRIETARY - Copyright © - Unpublished Work - See title page for details.

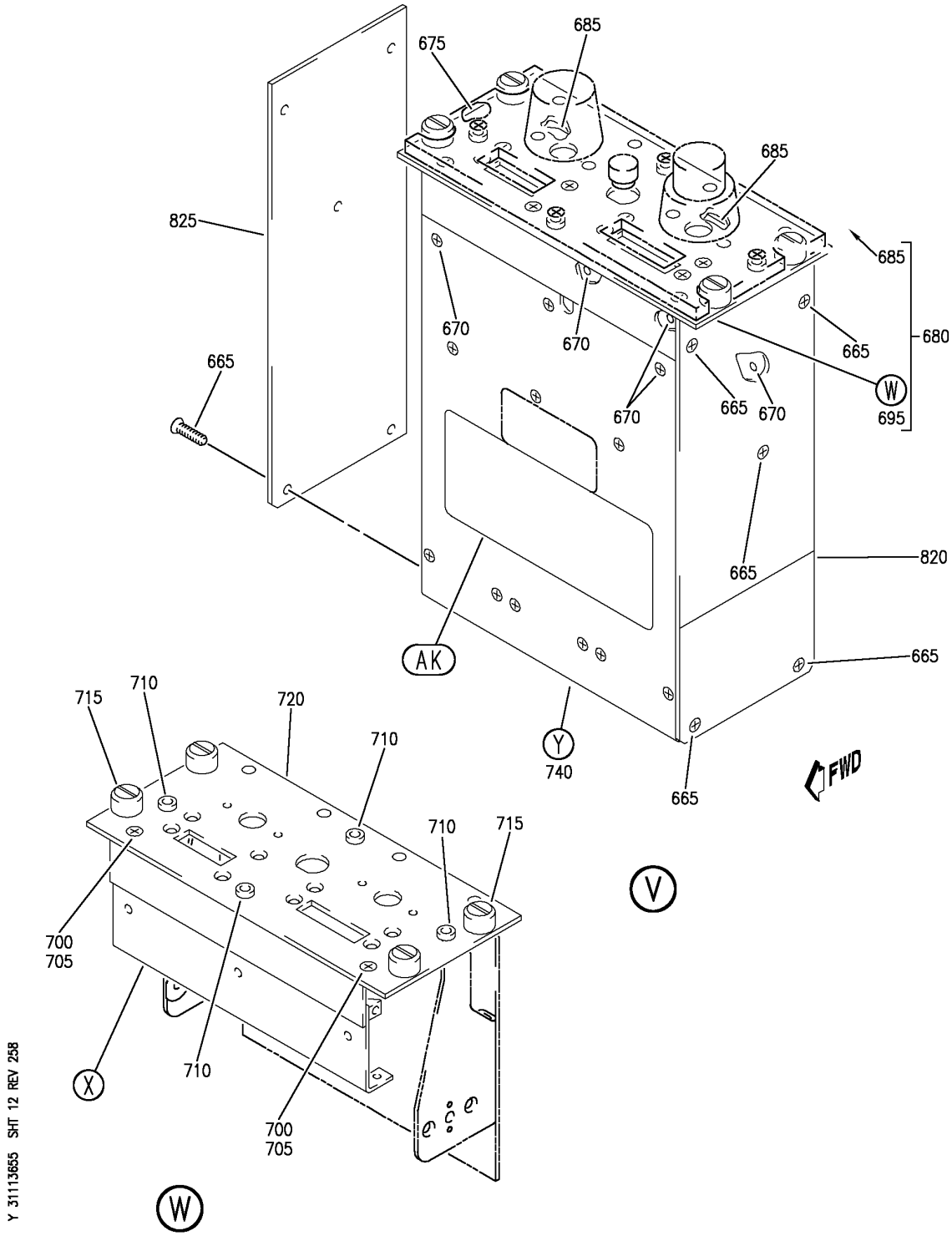

PANEL INSTL-P8 ELECTRONICS (CONTROL STAND AFT ELECTRONIC PANEL ONLY)
FIGURE 55 (SHEET 12)

BOEING PROPRIETARY - Copyright © - Unpublished Work - See title page for details.

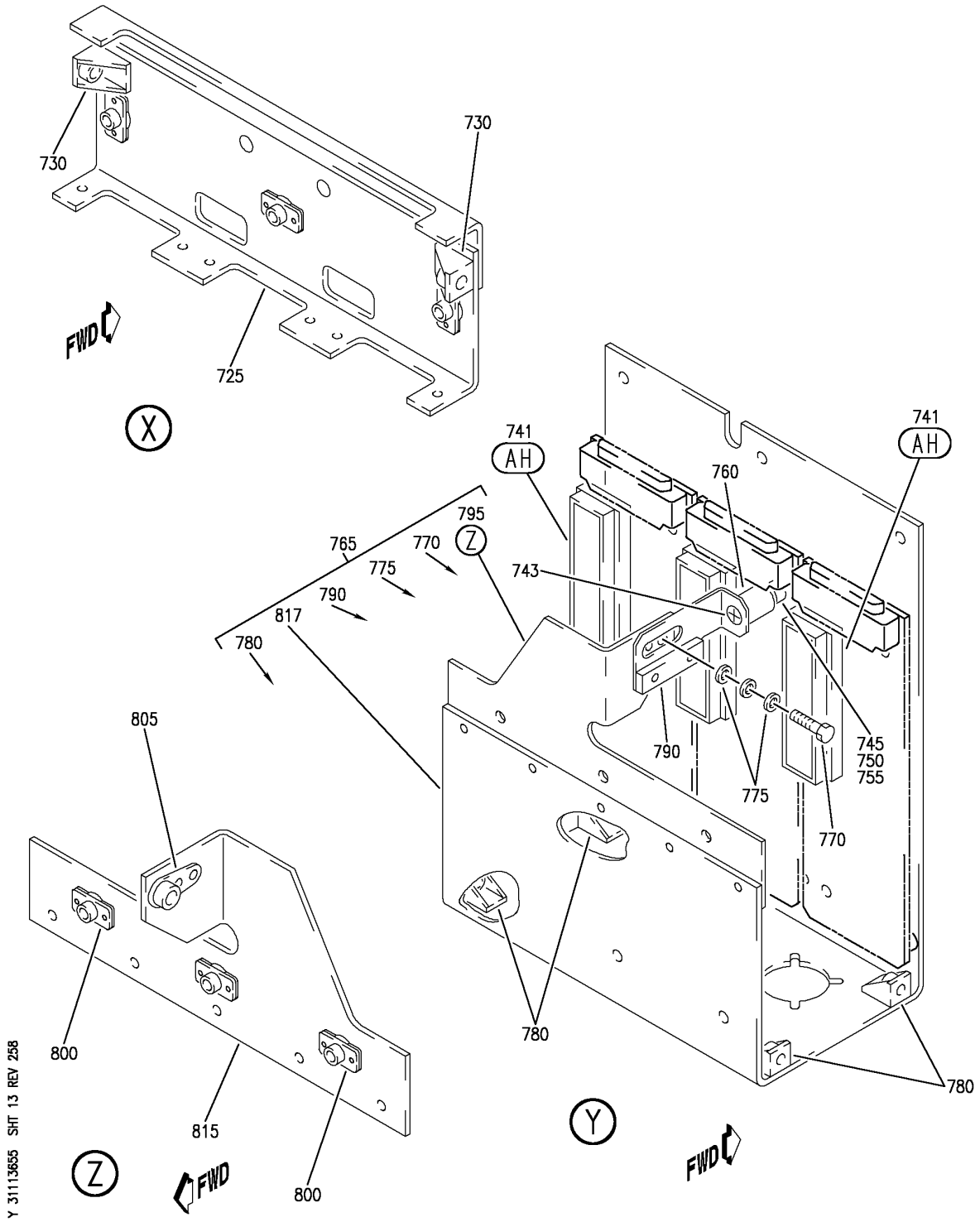

PANEL INSTL-P8 ELECTRONICS (CONTROL STAND AFT ELECTRONIC PANEL ONLY)
FIGURE 55 (SHEET 13)

BOEING PROPRIETARY - Copyright © - Unpublished Work - See title page for details.

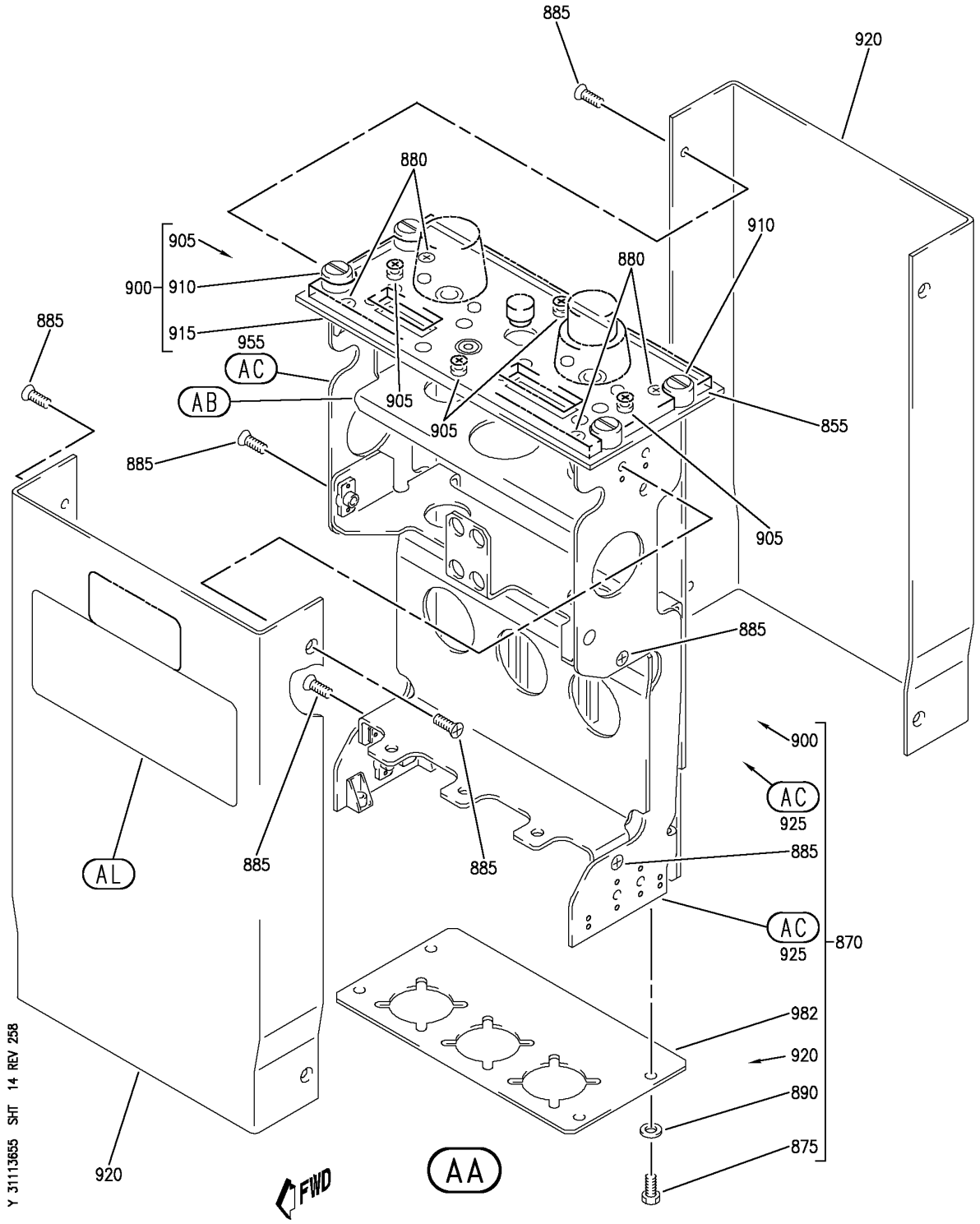

PANEL INSTL-P8 ELECTRONICS (CONTROL STAND AFT ELECTRONIC PANEL ONLY)
FIGURE 55 (SHEET 14)

BOEING PROPRIETARY - Copyright © - Unpublished Work - See title page for details.

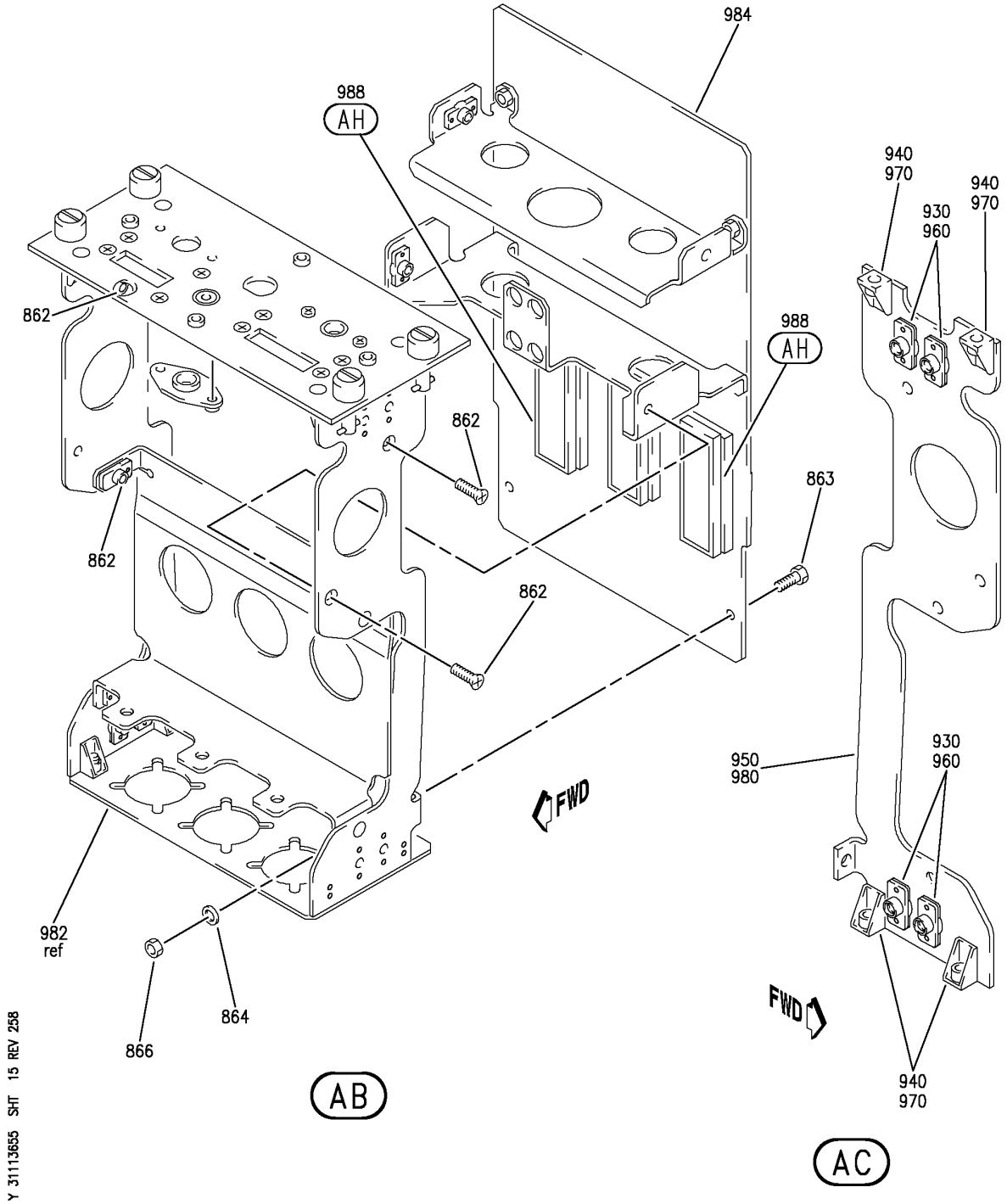

PANEL INSTL-P8 ELECTRONICS (CONTROL STAND AFT ELECTRONIC PANEL ONLY)
FIGURE 55 (SHEET 15)

BOEING PROPRIETARY - Copyright © - Unpublished Work - See title page for details.

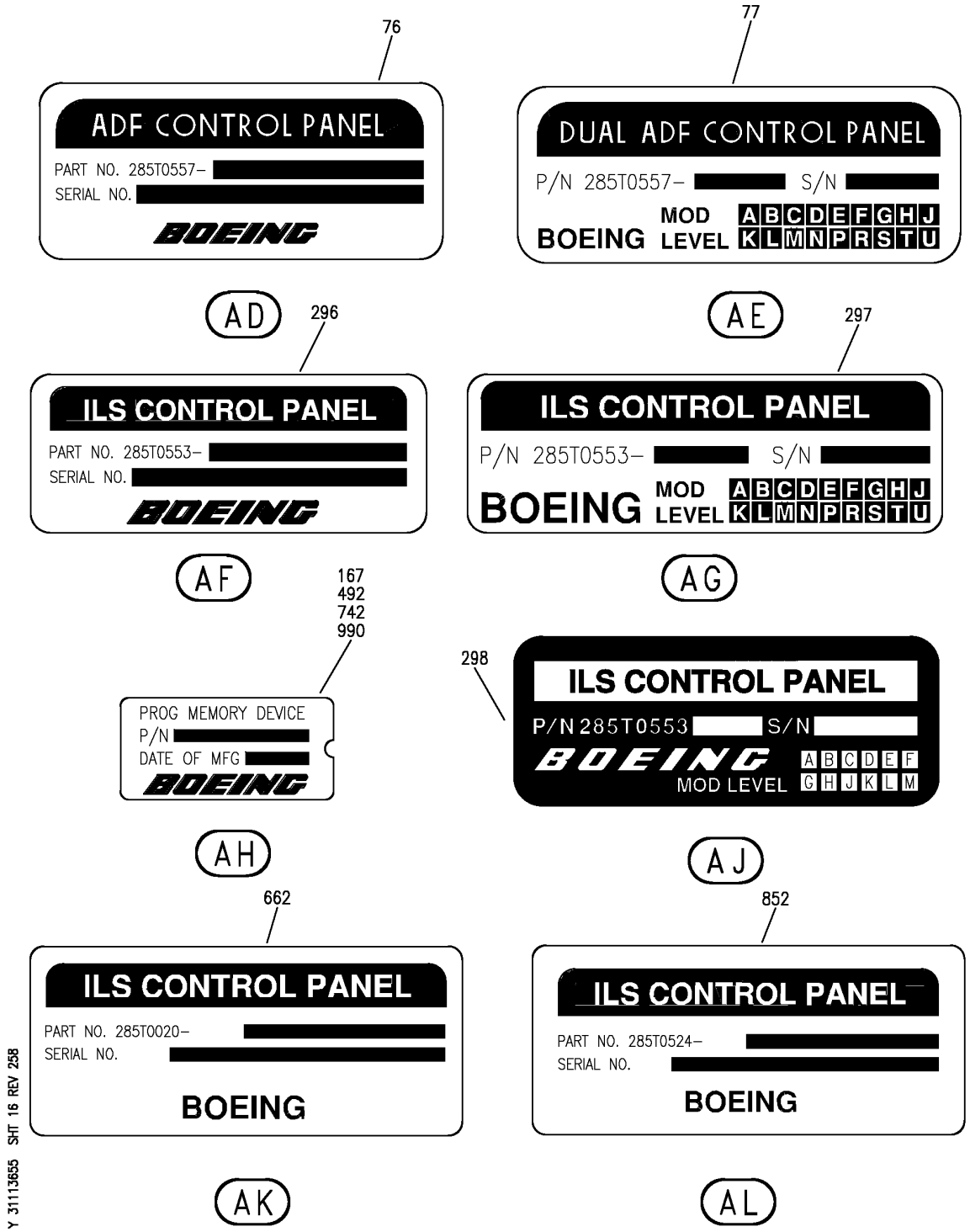

PANEL INSTL-P8 ELECTRONICS (CONTROL STAND AFT ELECTRONIC PANEL ONLY)
FIGURE 55 (SHEET 16)

BOEING PROPRIETARY - Copyright © - Unpublished Work - See title page for details.

FIG ITEM	PART NUMBER	1 2 3 4 5 6 7 NOMENCLATURE	EFFECT FROM TO	UNITS PER ASSY
55				
		PANEL INSTL-P8 ELECTRONICS (CONTROL STAND AFT ELECTRONIC PANEL ONLY)	108120	RF
- 1	233N6103-62	PANEL INSTL-P8 ELECTRONICS (CONTROL STAND AFT ELECTRONIC PANEL ONLY) FOR NHA/OTHER SYS DET SEE: 25-10-00-15B	108120	RF
5	622-5129-108	.PANEL ASSY-WEATHER RDR CONT (CUSTOMER FURNISHED) SUPPLIER CODE: V4V792 ELECTRICAL EQUIP NUMBER: M00075 COMPONENT MAINT MANUAL REF: 34-45-40 FOR BREAKDOWN SEE: 34-43-02-02	108120	RF
10	G7400-27	.PANEL ASSY-VHF CONT (CUSTOMER FURNISHED) SUPPLIER CODE: V99837 ELECTRICAL EQUIP NUMBER: M00078 M00079 COMPONENT MAINT MANUAL REF: 23-10-28 QUALIFIED I/W DATA: G7400-01 I/W G7400-27 BUT -27 HAS EXPANDED CHANNEL (8.33 MHZ) CAPABILITY FOR BREAKDOWN SEE: 23-12-02-03	108120	RF
15	285T0022-44	.PANEL ASSY-AUDIO SELECTOR SUPPLIER CODE: V89954 ELECTRICAL EQUIP NUMBER: M00070 M00071 COMPONENT MAINT MANUAL REF: 23-51-54 FOR OTHER SYS DETAILS SEE: 23-51-01-05 33-13-01-16	108120	2

MISSING ITEM NUMBERS NOT APPLICABLE

- ITEM NOT ILLUSTRATED

BOEING PROPRIETARY - Copyright © - Unpublished Work - See title page for details.

FIG ITEM	PART NUMBER	1 2 3 4 5 6 7 NOMENCLATURE	EFFECT FROM TO	UNITS PER ASSY
55				
15	285T0022-38	.PANEL ASSY-AUDIO SELECTOR SUPPLIER CODE: V89954 ELECTRICAL EQUIP NUMBER: M00070 M00071 COMPONENT MAINT MANUAL REF: 23-51-54 FOR OTHER SYS DETAILS SEE: 23-51-01-05 33-13-01-16	108120	2
15	285T0022-28	.PANEL ASSY-AUDIO SELECTOR SUPPLIER CODE: V89954 ELECTRICAL EQUIP NUMBER: M00070 M00071 COMPONENT MAINT MANUAL REF: 23-51-51 FOR OTHER SYS DETAILS SEE: 23-51-01-05 33-13-01-16	108120	2
16	BAC27TEX4053	..MARKER-ALUMINUM FOIL SUPPLIER CODE: V89954 QUALIFIED OPTIONAL DATA: BAC27TEX4053 OPTIONAL BAC27TEX1992 WHEN USED ASSOCIATED PARTS USED ON: 285T0022-38 285T0022-41 285T0022-44	108120	1
18	BAC27TEX1992	..MARKER-ALUMINUM FOIL QUALIFIED OPTIONAL DATA: BAC27TEX4053 OPTIONAL BAC27TEX1992 WHEN USED ASSOCIATED PARTS USED ON: 285T0022-38 285T0022-41 285T0022-44	108120	1
18	BAC27TEX1992	..MARKER-ALUMINUM FOIL USED ON: 285T0022-28 285T0022-31	108120	1
19	NAS514P440-5	..SCREW	108120	12
20	NAS514P632-5	..SCREW	108120	4
22	NAS514P440-4	..SCREW	108120	4

MISSING ITEM NUMBERS NOT APPLICABLE

— ITEM NOT ILLUSTRATED

BOEING PROPRIETARY - Copyright © - Unpublished Work - See title page for details.

FIG ITEM	PART NUMBER	1 2 3 4 5 6 7 NOMENCLATURE	EFFECT FROM TO	UNITS PER ASSY
55				
35	BACG20ZA350	..GROMMET-	108120	2
		USED ON:		
		285T0022-38		
		285T0022-31		
		285T0022-28		
35	BACG20ZA350	..GROMMET-	108120	2
		OPTIONAL PART:		
		BACG20ZA000350		
		USED ON:		
		285T0022-44		
		285T0022-41		
35	BACG20ZA000350	..GROMMET-	108120	2
		OPTIONAL PART:		
		BACG20ZA350		
		USED ON:		
		285T0022-44		
		285T0022-41		
40	285T0179-47	..PANEL-ACCESS	108120	2
		SUPPLIER CODE:		
		V89954		
45	285T0179-48	..CHASSIS ASSY-	108120	1
		SUPPLIER CODE:		
		V89954		
50	A27M88-04	...NUT-ANCHOR	108120	12
		SUPPLIER CODE:		
		V62554		
		OPTIONAL PART:		
		F22A27M22-40		
		V0271B		
50	F22A27M22-40	...NUT-ANCHOR	108120	12
		SUPPLIER CODE:		
		V0217B		
		OPTIONAL PART:		
		A27M88-04		
		V62554		
		ATTACHING PARTS		
- 52	BACR15BA2AD	...RIVET-	108120	24
		SIZE DETERMINED ON INSTL.		
		-------*-------		
55	285T0179-24	...CHASSIS-	108120	1
		SUPPLIER CODE:		
		V89954		
58	285T0179-43	..PANEL ASSY-FRONT	108120	1
		SUPPLIER CODE:		
		V89954		

MISSING ITEM NUMBERS NOT APPLICABLE

- ITEM NOT ILLUSTRATED

BOEING PROPRIETARY - Copyright © - Unpublished Work - See title page for details.

FIG ITEM	PART NUMBER	1 2 3 4 5 6 7 NOMENCLATURE	EFFECT FROM TO	UNITS PER ASSY
55				
60	D1400-6A1	...STUD ASSY SUPPLIER CODE: V08524 SPECIFICATION NUMBER: BACS21DD1	108120	4
62	SF6G6CBB5D	...NUT SUPPLIER CODE: V12324 SPECIFICATION NUMBER: BACN10PA06-6	108120	3
64	F19716-06	...NUT-ANCHOR SUPPLIER CODE: V15653 ATTACHING PARTS	108120	4
- 66	BACR15BA2AD	...RIVET- SIZE DETERMINED ON INSTL. -------*-------	108120	8
68	285T0179-45	...SPACER- SUPPLIER CODE: V89954	108120	4
69	285T0179-44	...PANEL- SUPPLIER CODE: V89954	108120	1
70	G7403-01	.PANEL ASSY-ADF CONT DUAL (CUSTOMER FURNISHED) SUPPLIER CODE: V99837 FUNCTIONAL DESCRIPTION: ALLOWS THE FLIGHT CREW TO TUNE THE ADF RECEIVER TO THE APPROPRIATE FREQUENCY FOR THE GROUND STATION BEING USED TO AID NAVIGATION. ELECTRICAL EQUIP NUMBER: M01046 FOR BREAKDOWN SEE: 34-57-02-03	108120	RF

MISSING ITEM NUMBERS NOT APPLICABLE

- ITEM NOT ILLUSTRATED

BOEING PROPRIETARY - Copyright © - Unpublished Work - See title page for details.

FIG ITEM	PART NUMBER	1 2 3 4 5 6 7 NOMENCLATURE	EFFECT FROM TO	UNITS PER ASSY
55				
180	233N6204-301	.PANEL ASSY-FIRE/OVERHEAT TEST SUPPLIER CODE: V89954 COMPONENT MAINT MANUAL REF: 26-11-52 QUALIFIED I/W DATA: THE 233N6204-301 PANEL ASSY IS I/W THE 233N6204-15 PANEL ASSY T/W THE S233T100-5508 LIGHTPLATE. FOR OTHER SYS DETAILS SEE: 26-12-51-03 26-11-02-01 26-17-51-06 33-13-01-16	108120	1
182	233T6204-301	.PANEL ASSY-FIRE/OVERHEAT TEST SUPPLIER CODE: V89954 COMPONENT MAINT MANUAL REF: 26-11-51 QUALIFIED I/W DATA: 233T6204-301 PANEL ASSY IS I/W 233T6204-13 PANEL ASSY T/W S233T100-538 LIGHTPLATE FOR OTHER SYS DETAILS SEE: 26-11-02-01 26-17-51-06 33-13-01-16	108120	1
- 185	233N6204-15	..PANEL ASSY- SUPPLIER CODE: V89954 ELECTRICAL EQUIP NUMBER: M10445 COMPONENT MAINT MANUAL REF: 26-11-52 QUALIFIED I/W DATA: THE 233N6204-301 PANEL ASSY IS I/W THE 233N6204-15 PANEL ASSY T/W THE S233T100-5508 LIGHTPLATE. USED ON: 233N6204-301	108120	RF

MISSING ITEM NUMBERS NOT APPLICABLE

- ITEM NOT ILLUSTRATED

BOEING PROPRIETARY - Copyright © - Unpublished Work - See title page for details.

	FIG ITEM	PART NUMBER	1 2 3 4 5 6 7 NOMENCLATURE	EFFECT FROM TO	UNITS PER ASSY
	55				
	- 187	233T6204-13	..PANEL ASSY- SUPPLIER CODE: V89954 ELECTRICAL EQUIP NUMBER: M10445 COMPONENT MAINT MANUAL REF: 26-11-51 QUALIFIED I/W DATA: 233T6204-301 PANEL ASSY IS I/W 233T6204-13 PANEL ASSY T/W S233T100-538 LIGHTPLATE USED ON: 233T6204-301	108120	RF
R	- 187	233T6204-16	..PANEL ASSY- SUPPLIER CODE: V89954 ELECTRICAL EQUIP NUMBER: M10445 COMPONENT MAINT MANUAL REF: 26-11-51 USED ON: 233T6204-301	108120	RF
R	190	NAS514P632-5	...SCREW- USED ON: 233N6204-15	108120	3
R	192	NAS514P632-5	...SCREW- USED ON: 233T6204-13	108120	3
R	195	NAS1801-06-5	...SCREW- OPTIONAL PART: BACS12HN06-5 USED ON: 233N6204-15	108120	3
R	195	BACS12HN06-5	...SCREW- OPTIONAL PART: NAS1801-06-5 USED ON: 233N6204-15	108120	3
R	197	BACS12CK06U5	...SCREW- USED ON: 233T6204-13	108120	3
R	200	MS35338-41	...WASHER- OPTIONAL PART: BACW10EC06S USED ON: 233N6204-15	108120	3

MISSING ITEM NUMBERS NOT APPLICABLE

– ITEM NOT ILLUSTRATED

BOEING PROPRIETARY - Copyright © - Unpublished Work - See title page for details.

FIG ITEM	PART NUMBER	1 2 3 4 5 6 7 NOMENCLATURE	EFFECT FROM TO	UNITS PER ASSY
55				
200	BACW10EC06S	...WASHER- OPTIONAL PART: MS35338-41 USED ON: 233N6204-15	108120	3
202	BACW10EC06CD	...WASHER- USED ON: 233T6204-13	108120	3
205	233N3250-40	...BRACKET-SPRT USED ON: 233N6204-15	108120	1
207	233T6200-64	...BRACKET-SPRT USED ON: 233T6204-13	108120	1
210	69B46200-14	...STANDOFF- USED ON: 233N6204-15	108120	3
212	69B46200-11	...STANDOFF- USED ON: 233T6204-13	108120	3
215	233N6204-11	...BASEPLATE ASSY- SUPPLIER CODE: V89954 USED ON: 233N6204-15	108120	1
217	233T6204-10	...BASEPLATE ASSY- SUPPLIER CODE: V89954 USED ON: 233T6204-13	108120	1
220	PFSC35-38ASEMB	....STUD ASSY- SUPPLIER CODE: V72794 SPECIFICATION NUMBER: BACS21DX1B USED ON: 233N6204-11	108120	4
222	BACS21DD1B	....STUD ASSY- SUPPLIER CODE: V08524 SPECIFICATION NUMBER: BACS21DD1B USED ON: 233T6204-10	108120	4

MISSING ITEM NUMBERS NOT APPLICABLE

– ITEM NOT ILLUSTRATED

BOEING PROPRIETARY - Copyright © - Unpublished Work - See title page for details.

FIG ITEM	PART NUMBER	1 2 3 4 5 6 7 NOMENCLATURE	EFFECT FROM TO	UNITS PER ASSY
55				
225	SF6G6CBB5D	....NUT-	108120	2
		SUPPLIER CODE:		
		V12324		
		SPECIFICATION NUMBER:		
		BACN10PA06-6		
		USED ON:		
		233N6204-11		
227	SF6G6CBB5D	....NUT-	108120	2
		SUPPLIER CODE:		
		V12324		
		SPECIFICATION NUMBER:		
		BACN10PA06-6		
		USED ON:		
		233T6204-10		
230	233N6204-12	....BASEPLATE-	108120	1
		SUPPLIER CODE:		
		V89954		
		USED ON:		
		233N6204-11		
232	BACP10U0187	....BASEPLATE-	108120	1
		USED ON:		
		233T6204-10		
235	233N6205-12	.PANEL ASSY-ENG FIRE CONT	108120	1
		SUPPLIER CODE:		
		V89954		
		ELECTRICAL EQUIP NUMBER:		
		M10443		
		COMPONENT MAINT MANUAL REF:		
		26-15-41		
		FOR OTHER SYS DETAILS SEE:		
		26-11-54-02A		
		26-21-01-02		
240	NAS1801-06-5	..SCREW	108120	3
245	NAS1801-04-4	..SCREW	108120	6
250	NAS514P632-5	..SCREW	108120	3
253	233N6205-16	..BRACKET ASSY-	108120	1
		SUPPLIER CODE:		
		V89954		
257	BACG20ZA0208	...GROMMET	108120	2
260	233N3250-61	..BRACKET-SPRT	108120	1
265	69B46200-29	..STANDOFF	108120	1
270	233N6205-17	..STANDOFF-	108120	2
		SUPPLIER CODE:		
		V89954		
275	233N6205-13	..BASEPLATE ASSY-	108120	1
		SUPPLIER CODE:		
		V89954		

MISSING ITEM NUMBERS NOT APPLICABLE

– ITEM NOT ILLUSTRATED

BOEING PROPRIETARY - Copyright © - Unpublished Work - See title page for details.

FIG ITEM	PART NUMBER	1 2 3 4 5 6 7 NOMENCLATURE	EFFECT FROM TO	UNITS PER ASSY
55				
280	SF6GXBAS8D	...PIN- SUPPLIER CODE: V12324	108120	2
285	BACP10U045OT	.PANEL ASSY	108120	1
290	G6992-12	.PANEL ASSY-DUAL AIR TRAFFIC CONT (CUSTOMER FURNISHED) SUPPLIER CODE: V99837 FUNCTIONAL DESCRIPTION: PROVIDES SELECTION OF A 4-DIGIT REPLY CODE FOR ONE OR TWO ATC/MODE S TRANSPONDER ENABLES TRANSPONDER AND TCAS TO BE SET TO TEST STANDBY TRANSPONDER ONLY FULL TCAS OR TRAFFIC ADVISORY ONLY MODE OF OPERATION ELECTRICAL EQUIP NUMBER: M10140 COMPONENT MAINT MANUAL REF: 34-50-22 FOR BREAKDOWN SEE: 34-53-02-02	108120	RF
295	285T0553-4	.PANEL ASSY-ILS CONT SUPPLIER CODE: V89954 ELECTRICAL EQUIP NUMBER: M00087 COMPONENT MAINT MANUAL REF: 34-31-61 FOR OTHER SYS DETAILS SEE: 11-31-05-64A 33-13-01-16 34-31-02-02	108120	1
295	285T0553-1	.PANEL ASSY-ILS CONT SUPPLIER CODE: V89954 ELECTRICAL EQUIP NUMBER: M00087 COMPONENT MAINT MANUAL REF: 34-31-61 FOR OTHER SYS DETAILS SEE: 11-31-05-64A 33-13-01-16 34-31-02-02	108120	1

MISSING ITEM NUMBERS NOT APPLICABLE

– ITEM NOT ILLUSTRATED

BOEING PROPRIETARY - Copyright © - Unpublished Work - See title page for details.

FIG ITEM	PART NUMBER	1 2 3 4 5 6 7 NOMENCLATURE	EFFECT FROM TO	UNITS PER ASSY
55				
295	285T0553-2	.PANEL ASSY-ILS CONT SUPPLIER CODE: V89954 ELECTRICAL EQUIP NUMBER: M00087 COMPONENT MAINT MANUAL REF: 34-31-61 FOR OTHER SYS DETAILS SEE: 11-31-05-64A 33-13-01-16 34-31-02-02	108120	1
295	285T0553-3	.PANEL ASSY-ILS CONT SUPPLIER CODE: V89954 ELECTRICAL EQUIP NUMBER: M00087 FOR OTHER SYS DETAILS SEE: 11-31-05-64A 33-13-01-16 34-31-02-02	108120	1
296	BAC27TEX3465	..MARKER-ALUMINUM FOIL SUPPLIER CODE: V89954 QUALIFIED OPTIONAL DATA: BAC27TEX3465 OR BAC27TEX4173 OR BAC27TEX4812 ARE ALL OPT WHEN USED WITH ASSOCIATED ITEMS USED ON: 285T0553-4	108120	1
296	BAC27TEX3465	..MARKER-ALUMINUM FOIL SUPPLIER CODE: V89954 USED ON: 285T0553-1 285T0553-2 285T0553-3	108120	1
297	BAC27TEX4173	..MARKER-ALUMINUM FOIL SUPPLIER CODE: V89954 QUALIFIED OPTIONAL DATA: BAC27TEX3465 OR BAC27TEX4173 OR BAC27TEX4812 ARE ALL OPT WHEN USED WITH ASSOCIATED ITEMS USED ON: 285T0553-4	108120	1

MISSING ITEM NUMBERS NOT APPLICABLE

– ITEM NOT ILLUSTRATED

BOEING PROPRIETARY - Copyright © - Unpublished Work - See title page for details.

FIG ITEM	PART NUMBER	1 2 3 4 5 6 7 NOMENCLATURE	EFFECT FROM TO	UNITS PER ASSY
55				
298	BAC27TEX4812	..MARKER-ALUMINUM FOIL SUPPLIER CODE: V89954 QUALIFIED OPTIONAL DATA: BAC27TEX3465 OR BAC27TEX4173 OR BAC27TEX4812 ARE ALL OPT WHEN USED WITH ASSOCIATED ITEMS USED ON: 285T0553-4	108120	1
300	WCS225-7	..SEAL ASSY-SHAFT SUPPLIER CODE: V51074 ATTACHING PARTS	108120	2
- 305	MS35206-202	..SCREW -------*-------	108120	4
310	NAS514P440-4P	..SCREW	108120	4
315	NAS514P440-5P	..SCREW	108120	12
325	NAS1801-04-5	..SCREW	108120	12
330	MS35338-40	..WASHER	108120	8
340	AN960-4L	..WASHER	108120	8
350	285T0580-1	..GASKET-LCD MODULE SUPPLIER CODE: V89954 QUALIFIED OPTIONAL DATA: 285T0580-1 OPTIONAL TO 285T0580-2 WHEN USED WITH ASSOCIATED PARTS USED ON: 285T0553-4	108120	2
350	285T0580-1	..GASKET-LCD MODULE SUPPLIER CODE: V89954 USED ON: 285T0553-1 285T0553-2 285T0553-3	108120	2
353	285T0580-2	..GASKET ASSY-LCD MODULE SUPPLIER CODE: V89954 QUALIFIED OPTIONAL DATA: 285T0580-1 OPTIONAL TO 285T0580-2 WHEN USED WITH ASSOCIATED PARTS USED ON: 285T0553-4	108120	2

MISSING ITEM NUMBERS NOT APPLICABLE

- ITEM NOT ILLUSTRATED

BOEING PROPRIETARY - Copyright © - Unpublished Work - See title page for details.

FIG ITEM	PART NUMBER	1 2 3 4 5 6 7 NOMENCLATURE	EFFECT FROM TO	UNITS PER ASSY
55				
355	285T1151-1	..GASKET-	108120	2
		SUPPLIER CODE:		
		V89954		
		QUALIFIED OPTIONAL DATA:		
		285T1151-1 OPTIONAL TO		
		285T1151-2 WHEN USED		
		WITH ASSOCIATED ITEMS		
		USED ON:		
		285T0553-4		
355	285T1151-2	..GASKET-	108120	2
		SUPPLIER CODE:		
		V89954		
		QUALIFIED OPTIONAL DATA:		
		285T1151-1 OPTIONAL TO		
		285T1151-2 WHEN USED		
		WITH ASSOCIATED ITEMS		
		USED ON:		
		285T0553-4		
365	285T0548-1	..PANEL ASSY-FRONT	108120	1
		SUPPLIER CODE:		
		V89954		
370	BACS21DD1B	...STUD ASSY	108120	4
		SUPPLIER CODE:		
		V08524		
		SPECIFICATION NUMBER:		
		BACS21DD1B		
375	SF6G6CBB5D	...NUT	108120	2
		SUPPLIER CODE:		
		V12324		
		SPECIFICATION NUMBER:		
		BACN10PA06-6		
380	U256-1	...NUT-PRESS	108120	8
		SUPPLIER CODE:		
		V46384		
385	285T0548-11	...PANEL-	108120	1
		SUPPLIER CODE:		
		V89954		
390	285T0549-1	..COVER ASSY-	108120	2
		SUPPLIER CODE:		
		V89954		
395	285T0550-1	..PANEL ASSY-SIDE	108120	1
		SUPPLIER CODE:		
		V89954		
		OPTIONAL PART:		
		285T0550-9		
		V89954		
		285T0550-13		
		V89954		

MISSING ITEM NUMBERS NOT APPLICABLE

– ITEM NOT ILLUSTRATED

BOEING PROPRIETARY - Copyright © - Unpublished Work - See title page for details.

FIG ITEM	PART NUMBER	1 2 3 4 5 6 7 NOMENCLATURE	EFFECT FROM TO	UNITS PER ASSY
55				
395	285T0550-9	..PANEL ASSY-SIDE	108120	1
		SUPPLIER CODE:		
		V89954		
		OPTIONAL PART:		
		285T0550-1		
		V89954		
		285T0550-13		
		V89954		
395	285T0550-13	..PANEL ASSY-SIDE	108120	1
		SUPPLIER CODE:		
		V89954		
		OPTIONAL PART:		
		285T0550-1		
		V89954		
		285T0550-9		
		V89954		
400	FE0440EF	...NUT-PRESS	108120	2
		SUPPLIER CODE:		
		V46384		
405	FE0X440	...NUT-PRESS	108120	4
		SUPPLIER CODE:		
		V46384		
		USED ON:		
		285T0550-1		
405	FE0440EF	...NUT-PRESS	108120	4
		SUPPLIER CODE:		
		V46384		
		USED ON:		
		285T0550-9		
		285T0550-13		
410	LAC440-1	...NUT-PRESS	108120	4
		SUPPLIER CODE:		
		V46384		
		USED ON:		
		285T0550-1		
		285T0550-9		
415	BACN10XR04	...NUTPLATE-	108120	4
		USED ON:		
		285T0550-13		
		ATTACHING PARTS		
- 420	BACR15BA2AD	...RIVET-	108120	8
		SIZE DETERMINED ON INSTL.		
		USED ON:		
		285T0550-13		
		-------*-------		
425	F22A27M22-40	...NUT-ANCHOR	108120	2
		SUPPLIER CODE:		
		V0217B		

MISSING ITEM NUMBERS NOT APPLICABLE

– ITEM NOT ILLUSTRATED

BOEING PROPRIETARY - Copyright © - Unpublished Work - See title page for details.

FIG ITEM	PART NUMBER	1 2 3 4 5 6 7 NOMENCLATURE	EFFECT FROM TO	UNITS PER ASSY
55				
		ATTACHING PARTS		
- 430	BACR15BA2AD	...RIVET-	108120	4
		SIZE DETERMINED ON INSTL.		
		-------*-------		
435	285T0550-5	...PANEL-	108120	1
		SUPPLIER CODE:		
		V89954		
		USED ON:		
		285T0550-1		
		285T0550-9		
435	285T0550-17	...PANEL-	108120	1
		SUPPLIER CODE:		
		V89954		
		USED ON:		
		285T0550-13		
440	285T0550-2	..PANEL ASSY-SIDE	108120	1
		SUPPLIER CODE:		
		V89954		
		OPTIONAL PART:		
		285T0550-10		
		V89954		
		285T0550-14		
		V89954		
440	285T0550-10	..PANEL ASSY-SIDE	108120	1
		SUPPLIER CODE:		
		V89954		
		OPTIONAL PART:		
		285T0550-2		
		V89954		
		285T0550-14		
		V89954		
440	285T0550-14	..PANEL ASSY-SIDE	108120	1
		SUPPLIER CODE:		
		V89954		
		OPTIONAL PART:		
		285T0550-2		
		V89954		
		285T0550-10		
		V89954		
445	FE0440EF	...NUT-PRESS	108120	2
		SUPPLIER CODE:		
		V46384		
450	FE0X440	...NUT-PRESS	108120	4
		SUPPLIER CODE:		
		V46384		
		USED ON:		
		285T0550-2		

MISSING ITEM NUMBERS NOT APPLICABLE

- ITEM NOT ILLUSTRATED

BOEING PROPRIETARY - Copyright © - Unpublished Work - See title page for details.

FIG ITEM	PART NUMBER	1 2 3 4 5 6 7 NOMENCLATURE	EFFECT FROM TO	UNITS PER ASSY
55				
450	FE0440EF	...NUT-PRESS SUPPLIER CODE: V46384 USED ON: 285T0550-10 285T0550-14	108120	4
455	LAC440-1	...NUT-PRESS SUPPLIER CODE: V46384 USED ON: 285T0550-2 285T0550-10	108120	4
460	BACN10XR04	...NUTPLATE- USED ON: 285T0550-14 ATTACHING PARTS	108120	4
- 465	BACR15BA2AD	...RIVET- SIZE DETERMINED ON INSTL. -------*-------	108120	8
470	F22A27M22-40	...NUT-ANCHOR SUPPLIER CODE: V0217B ATTACHING PARTS	108120	2
- 475	BACR15BA2AD	...RIVET- SIZE DETERMINED ON INSTL. -------*-------	108120	4
480	285T0550-6	...PANEL- SUPPLIER CODE: V89954 USED ON: 285T0550-2 285T0550-10	108120	1
480	285T0550-18	...PANEL- SUPPLIER CODE: V89954 USED ON: 285T0550-14	108120	1
484	285T0558-3	..MODULE ASSY-ELECT. SUPPLIER CODE: V89954 QUALIFIED OPTIONAL DATA: 285T0558-3 OPT TO 285T0558-10 WHEN USED WITH ASSOCIATED ITEMS USED ON: 285T0553-4	108120	1

MISSING ITEM NUMBERS NOT APPLICABLE

- ITEM NOT ILLUSTRATED

BOEING PROPRIETARY - Copyright © - Unpublished Work - See title page for details.

FIG ITEM	PART NUMBER	1 2 3 4 5 6 7 NOMENCLATURE	EFFECT FROM TO	UNITS PER ASSY
55				
484	285T0558-10	..MODULE ASSY-ELECT. SUPPLIER CODE: V89954 QUALIFIED OPTIONAL DATA: 285T0558-3 OPT TO 285T0558-10 WHEN USED WITH ASSOCIATED ITEMS USED ON: 285T0553-4	108120	1
484	285T0558-1	..MODULE ASSY-ELECT. SUPPLIER CODE: V89954 USED ON: 285T0553-4	108120	1
484	285T0558-2	..MODULE ASSY-ELECT. SUPPLIER CODE: V89954 USED ON: 285T0553-4	108120	1
484	285T0558-1	..MODULE ASSY-ELECT. SUPPLIER CODE: V89954 USED ON: 285T0553-1 285T0553-3	108120	1
484	285T0558-2	..MODULE ASSY-ELECT. SUPPLIER CODE: V89954 QUALIFIED OPTIONAL DATA: 285T0558-2 OPT TO 285T0558-9 WHEN USED WITH ASSOCIATED ITEMS USED ON: 285T0553-2	108120	1
484	285T0558-9	..MODULE ASSY-ELECT. SUPPLIER CODE: V89954 QUALIFIED OPTIONAL DATA: 285T0558-2 OPT TO 285T0558-9 WHEN USED WITH ASSOCIATED ITEMS USED ON: 285T0553-2	108120	1
484	285T0558-1	..MODULE ASSY-ELECT. SUPPLIER CODE: V89954 USED ON: 285T0553-2	108120	1

MISSING ITEM NUMBERS NOT APPLICABLE

– ITEM NOT ILLUSTRATED

BOEING PROPRIETARY - Copyright © - Unpublished Work - See title page for details.

FIG ITEM	PART NUMBER	1 2 3 4 5 6 7 NOMENCLATURE	EFFECT FROM TO	UNITS PER ASSY
55				
488	285T0566-1	...PMD ASSY-	108120	3
		SUPPLIER CODE:		
		V89954		
492	BAC27TEX2007	....DECAL-	108120	1
		OPTIONAL PART:		
		WHB673-1-0X0-5		
		V85480		
		DAT59-652		
		V85480		
492	WHB673-1-0X0-5	....DECAL-	108120	1
		SUPPLIER CODE:		
		V85480		
		OPTIONAL PART:		
		BAC27TEX2007		
		DAT59-652		
		V85480		
492	DAT59-652	....DECAL-	108120	1
		SUPPLIER CODE:		
		V85480		
		OPTIONAL PART:		
		BAC27TEX2007		
		WHB673-1-0X0-5		
		V85480		
496	285T0546-1	..PANEL-REAR	108120	1
		SUPPLIER CODE:		
		V89954		
500	BACP10U0037T	.PANEL ASSY	108120	2
505	362-021-002	.INDICATOR ASSY-RUD TRIM	108120	RF
		SUPPLIER CODE:		
		V26055		
		FUNCTIONAL DESCRIPTION:		
		DISPLAYS RUDDER TRIM		
		POSITION AS NOSE LEFT		
		AND RIGHT UNITS		
		SPECIFICATION NUMBER:		
		S231T282-2		
		ELECTRICAL EQUIP NUMBER:		
		N00083		
		COMPONENT MAINT MANUAL REF:		
		27-20-01		
		FOR BREAKDOWN SEE:		
		27-28-02-01A		

MISSING ITEM NUMBERS NOT APPLICABLE

– ITEM NOT ILLUSTRATED

BOEING PROPRIETARY - Copyright © - Unpublished Work - See title page for details.

	FIG ITEM	PART NUMBER	1 2 3 4 5 6 7 NOMENCLATURE	EFFECT FROM TO	UNITS PER ASSY
	55				
R	510	233T6201-324	.PANEL ASSY-AIL. RUD TRIM	108120	1
R			CONT		
R			SUPPLIER CODE:		
R			V89954		
R			FUNCTIONAL DESCRIPTION:		
R			CONTROLS AILERON RUDDER		
R			TRIM AND DISPLAYS TRIM		
R			ANGLE.		
R			COMPONENT MAINT MANUAL REF:		
R			27-21-63		
R			QUALIFIED I/W DATA:		
R			THE 233T6201-324 PANEL		
R			ASSY IS I/W THE		
R			233T6201-21 PANEL ASSY		
R			T/W THE S233T100-528		
R			LIGHTPLATE AND SA808-101		
R			KNOB		
R			FOR OTHER SYS DETAILS SEE:		
R			27-11-23-03		
R			27-21-23-03		
R			33-13-01-16		
	- 515	233T6201-21	..PANEL ASSY-	108120	RF
			SUPPLIER CODE:		
			V89954		
			ELECTRICAL EQUIP NUMBER:		
			M00074		
			COMPONENT MAINT MANUAL REF:		
			27-21-63		
			QUALIFIED I/W DATA:		
			THE 233T6201-324 PANEL		
			ASSY IS I/W THE		
			233T6201-21 PANEL ASSY		
			T/W THE S233T100-528		
			LIGHTPLATE AND SA808-101		
			KNOB		
R	520	NAS1801-06-5	...SCREW	108120	3
	525	NAS514P632-5	...SCREW	108120	7
	530	MS35338-41	...WASHER	108120	3
	535	233T6201-20	...SHROUD ASSY-	108120	1
			SUPPLIER CODE:		
			V89954		
	540	MF6001-06	....NUTPLATE	108120	4
			SUPPLIER CODE:		
			V15653		
			SPECIFICATION NUMBER:		
			BACN10KJ06CM		

MISSING ITEM NUMBERS NOT APPLICABLE

– ITEM NOT ILLUSTRATED

BOEING PROPRIETARY - Copyright © - Unpublished Work - See title page for details.

FIG ITEM	PART NUMBER	1 2 3 4 5 6 7 NOMENCLATURE	EFFECT FROM TO	UNITS PER ASSY
55				
		ATTACHING PARTS		
- 545	BACR15BA3AD	....RIVET-	108120	8
		SIZE DETERMINED ON INSTL.		
		-------*-------		
555	233T6200-38	...BRACKET-SPRT	108120	1
560	69B46200-7	...STANDOFF	108120	3
565	233T6201-15	...BASEPLATE ASSY-	108120	1
		SUPPLIER CODE:		
		V89954		
570	BACS21DD1B	....STUD ASSY	108120	4
		SUPPLIER CODE:		
		V08524		
		SPECIFICATION NUMBER:		
		BACS21DD1B		
575	SF6G6CBB5D	....NUT	108120	3
		SUPPLIER CODE:		
		V12324		
		SPECIFICATION NUMBER:		
		BACN10PA06-6		
580	233T6201-16	....BASEPLATE-	108120	1
		SUPPLIER CODE:		
		V89954		
585	233N6203-301	.PANEL ASSY-APU/CARGO FIRE CONT	108120	1
		SUPPLIER CODE:		
		V89954		
		COMPONENT MAINT MANUAL REF:		
		26-15-51		
		PRE ALERT SB:		
		33A0044		
		FOR OTHER SYS DETAILS SEE:		
		26-22-03-03		
		26-23-52-04A		
		33-13-01-16		

MISSING ITEM NUMBERS NOT APPLICABLE

– ITEM NOT ILLUSTRATED

BOEING PROPRIETARY - Copyright © - Unpublished Work - See title page for details.

FIG ITEM	PART NUMBER	1 2 3 4 5 6 7 NOMENCLATURE	EFFECT FROM TO	UNITS PER ASSY
55				
585	233N6203-1301	.PANEL ASSY-APU/CARGO FIRE CONT SUPPLIER CODE: V89954 ELECTRICAL EQUIP NUMBER: M10444 COMPONENT MAINT MANUAL REF: 26-15-51 REWORK DRAWING REF: 233N6251-4 POST ALERT SB: 33A0044 FOR OTHER SYS DETAILS SEE: 26-22-03-03 26-23-52-04A 33-13-01-16	108120	1
585	233N6203-355	.PANEL ASSY-APU/CARGO FIRE CONT SUPPLIER CODE: V89954 FOR OTHER SYS DETAILS SEE: 26-22-03-03 26-23-52-04A 33-13-01-16	108120	1
- 590	233N6203-161	..PANEL ASSY- SUPPLIER CODE: V89954 ELECTRICAL EQUIP NUMBER: M10444 COMPONENT MAINT MANUAL REF: 26-15-51 QUALIFIED I/W DATA: THE 233N6203-301 PANEL ASSY IS I/W THE 233N6203-161 PANEL ASSY T/W THE S233T100-573 LIGHTPLATE. 233N6203-9/-23/-45/-104/-105/-161 ARE ALL INTERCHANGEABLE EXCEPT SUBJECT TO CUSTOMER PREFERENCE USED ON: 233N6203-301 PRE ALERT SB: 33A0044	108120	RF

MISSING ITEM NUMBERS NOT APPLICABLE

- ITEM NOT ILLUSTRATED

BOEING PROPRIETARY - Copyright © - Unpublished Work - See title page for details.

FIG ITEM	PART NUMBER	1 2 3 4 5 6 7 NOMENCLATURE	EFFECT FROM TO	UNITS PER ASSY
55				
- 590	233N6203-252	..PANEL ASSY- SUPPLIER CODE: V89954 ELECTRICAL EQUIP NUMBER: M10444 COMPONENT MAINT MANUAL REF: 26-15-51 USED ON: 233N6203-355	108120	RF
- 590	233N6203-1161	..PANEL ASSY- SUPPLIER CODE: V89954 ELECTRICAL EQUIP NUMBER: M10444 COMPONENT MAINT MANUAL REF: 26-15-51 USED ON: 233N6203-1301 POST ALERT SB: 33A0044	108120	RF
595	NAS514P632-5	...SCREW- USED ON: 233N6203-161 233N6203-1161	108120	4
595	FH6C5TPKL12BN	...SCREW- SUPPLIER CODE: V12324 USED ON: 233N6203-252	108120	4
605	NAS1801-06-5	...SCREW- USED ON: 233N6203-161 233N6203-1161	108120	4
605	NAS1801-06-5	...SCREW- OPTIONAL PART: BACS12HN06-5 USED ON: 233N6203-252	108120	4
605	BACS12HN06-5	...SCREW- OPTIONAL PART: NAS1801-06-5 USED ON: 233N6203-252	108120	4
610	MS35338-41	...WASHER- USED ON: 233N6203-161 233N6203-1161	108120	4

MISSING ITEM NUMBERS NOT APPLICABLE

– ITEM NOT ILLUSTRATED

BOEING PROPRIETARY - Copyright © - Unpublished Work - See title page for details.

FIG ITEM	PART NUMBER	1 2 3 4 5 6 7 NOMENCLATURE	EFFECT FROM TO	UNITS PER ASSY
55				
610	BACW10EC06S	...WASHER-	108120	4
		USED ON:		
		233N6203-252		
615	69B46200-15	...STANDOFF	108120	4
620	233N6203-6	...BRACKET ASSY-	108120	RF
		SUPPLIER CODE:		
		V89954		
625	233N6203-2	...BASEPLATE ASSY-	108120	1
		SUPPLIER CODE:		
		V89954		
630	SF6G6CBB5D	....NUT	108120	3
		SUPPLIER CODE:		
		V12324		
		SPECIFICATION NUMBER:		
		BACN10PA06-6		
R 635	PFSC35-38ASEMB	....STUD ASSY	108120	4
R		SUPPLIER CODE:		
R		V72794		
R		SPECIFICATION NUMBER:		
R		BACS21DX1B		
640	233N6203-3	....BASEPLATE-	108120	1
		SUPPLIER CODE:		
		V89954		
645	BACP10U0600T	.PANEL ASSY	108120	1
655	BACP10U0262T	.PANEL	108120	1
660	285T0020-8	.PANEL ASSY-ILS CONT	108120	1
		SUPPLIER CODE:		
		V89954		
		ELECTRICAL EQUIP NUMBER:		
		M00087		
		COMPONENT MAINT MANUAL REF:		
		34-31-51		
		FOR OTHER SYS DETAILS SEE:		
		11-31-05-64A		
		33-13-01-16		
		34-31-02-02		
662	BAC27TEX0934	..MARKER-ALUMINUM FOIL	108120	1
		SUPPLIER CODE:		
		V89954		
665	NAS514P440-4P	..SCREW	108120	10
670	NAS514P440-5P	..SCREW	108120	6
675	S233-2	..SEAL-	108120	1
		SUPPLIER CODE:		
		V51896		
		OPTIONAL PART:		
		S233-9		
		V51896		

MISSING ITEM NUMBERS NOT APPLICABLE

— ITEM NOT ILLUSTRATED

BOEING PROPRIETARY - Copyright © - Unpublished Work - See title page for details.

FIG ITEM	PART NUMBER	1 2 3 4 5 6 7 NOMENCLATURE	EFFECT FROM TO	UNITS PER ASSY
55				
675	S233-9	..SEAL- SUPPLIER CODE: V51896 OPTIONAL PART: S233-2 V51896	108120	1
680	285T0082-10	..MODULE ASSY-FRONT SUPPLIER CODE: V89954 OPTIONAL PART: 285T0082-14 V89954	108120	1
680	285T0082-14	..MODULE ASSY-FRONT SUPPLIER CODE: V89954 OPTIONAL PART: 285T0082-10 V89954	108120	1
685	WCS225-3	...SEAL ASSY- SUPPLIER CODE: V51074 OPTIONAL PART: WCS225-7 V51074	108120	2
685	WCS225-7	...SEAL ASSY- SUPPLIER CODE: V51074 OPTIONAL PART: WCS225-3 V51074 ATTACHING PARTS	108120	2
- 690	MS35206-202	...SCREW -------*-------	108120	4
695	285T0440-1	...PANEL ASSY- SUPPLIER CODE: V89954 USED ON: 285T0082-10	108120	1
695	285T0440-22	...PANEL ASSY- SUPPLIER CODE: V89954 USED ON: 285T0082-14	108120	1
700	NAS514P440-5P	....SCREW	108120	2

MISSING ITEM NUMBERS NOT APPLICABLE

- ITEM NOT ILLUSTRATED

BOEING PROPRIETARY - Copyright © - Unpublished Work - See title page for details.

FIG ITEM	PART NUMBER	1 2 3 4 5 6 7 NOMENCLATURE	EFFECT FROM TO	UNITS PER ASSY
55				
705	92-1660-40	....NUT SUPPLIER CODE: V72962 SPECIFICATION NUMBER: BACN10DN40 OPTIONAL PART: 92-1660-440 V15653	108120	2
710	SF6G6CBB5D	....NUT SUPPLIER CODE: V12324 SPECIFICATION NUMBER: BACN10PA06-6	108120	4
715	BACS21DD1B	....STUD ASSY SUPPLIER CODE: V08524 SPECIFICATION NUMBER: BACS21DD1B	108120	4
720	285T0440-5	....PANEL- SUPPLIER CODE: V89954 USED ON: 285T0440-1	108120	1
720	285T0440-23	....PANEL- SUPPLIER CODE: V89954 USED ON: 285T0440-22	108120	1
725	285T0438-1	....CHASSIS ASSY-UPPER SUPPLIER CODE: V89954	108120	1
730	F22A27M22-40	.....NUT-ANCHOR SUPPLIER CODE: V0217B ATTACHING PARTS	108120	2
- 735	BACR15BA2AD	.....RIVET- SIZE DETERMINED ON INSTL. -------*-------	108120	4
740	285T0081-10	..MODULE ASSY-REAR SUPPLIER CODE: V89954	108120	1
741	285T0250-4	...PMD ASSY- SUPPLIER CODE: V89954	108120	3
742	BAC27TEX2007	....DECAL- OPTIONAL PART: WHB673-1D0X0D5 V85480	108120	1

MISSING ITEM NUMBERS NOT APPLICABLE

- ITEM NOT ILLUSTRATED

BOEING PROPRIETARY - Copyright © - Unpublished Work - See title page for details.

FIG ITEM	PART NUMBER	1 2 3 4 5 6 7 NOMENCLATURE	EFFECT FROM TO	UNITS PER ASSY
55				
742	WHB673-1D0X0D5	....DECAL-	108120	1
		SUPPLIER CODE:		
		V85480		
		OPTIONAL PART:		
		BAC27TEX2007		
743	NAS514P440-4P	...SCREW	108120	1
745	NAS514P440-7P	...SCREW	108120	1
750	NAS620-4L	...WASHER	108120	1
755	NAS43DD0-8	...SPACER	108120	1
760	8214B0440HL	...SPACER-THREADED	108120	1
		SUPPLIER CODE:		
		V06540		
765	285T0439-1	...CHASSIS ASSY-	108120	1
		SUPPLIER CODE:		
		V89954		
770	NAS1801-04-5	....SCREW	108120	1
775	AN960D4L	....WASHER	108120	3
780	F22A27M22-40	....NUT-ANCHOR	108120	4
		SUPPLIER CODE:		
		V0217B		
		ATTACHING PARTS		
- 785	BACR15BB2AD	....RIVET-	108120	8
		SIZE DETERMINED ON INSTL.		
		-------*-------		
790	285T0439-6	....BRACKET ASSY-	108120	1
		SUPPLIER CODE:		
		V89954		
795	285T0439-2	....SUPPORT ASSY-	108120	1
		SUPPLIER CODE:		
		V89954		
		ATTACHING PARTS		
- 797	BACR15BA3AD	....RIVET-	108120	5
		SIZE DETERMINED ON INSTL.		
		-------*-------		

MISSING ITEM NUMBERS NOT APPLICABLE

- ITEM NOT ILLUSTRATED

BOEING PROPRIETARY - Copyright © - Unpublished Work - See title page for details.

FIG ITEM	PART NUMBER	1 2 3 4 5 6 7 NOMENCLATURE	EFFECT FROM TO	UNITS PER ASSY
55				
800	RMF9201M40	.....NUTPLATE SUPPLIER CODE: V72962 SPECIFICATION NUMBER: BACN10JN04 OPTIONAL PART: BRFM20A04L V52828 MF1000-04BAC V15653 NS103218-40 V80539 MF53049-04 V15653 T8124S04S V11815 VN252A40L V92215	108120	3
805	T8077S440	.....NUTPLATE SUPPLIER CODE: V11815 SPECIFICATION NUMBER: BACN10JP04B OPTIONAL PART: MK2000-04BAC V15653 NS103198-40 V80539 RMA9207M40 V72962 VN201A1-40L V92215 BRM100A04L V52828 ATTACHING PARTS	108120	1
- 810	BACR15BA3AD	.....RIVET- SIZE DETERMINED ON INSTL. -------*-------	108120	8
815	285T0439-17	.....SUPPORT- SUPPLIER CODE: V89954	108120	1
817	285T0439-5	....CHASSIS- SUPPLIER CODE: V89954	108120	1
820	285T0439-3	..PANEL-SIDE SUPPLIER CODE: V89954	108120	1

MISSING ITEM NUMBERS NOT APPLICABLE

- ITEM NOT ILLUSTRATED

BOEING PROPRIETARY - Copyright © - Unpublished Work - See title page for details.

FIG ITEM	PART NUMBER	1 2 3 4 5 6 7 NOMENCLATURE	EFFECT FROM TO	UNITS PER ASSY
55				
825	285T0439-4	..PANEL-SIDE SUPPLIER CODE: V89954	108120	1
850	285T0524-6	.PANEL ASSY-ILS CONT SUPPLIER CODE: V89954 ELECTRICAL EQUIP NUMBER: M00087 COMPONENT MAINT MANUAL REF: 34-31-52 FOR OTHER SYS DETAILS SEE: 11-31-05-64A 33-13-01-16 34-31-02-02	108120	1
852	BAC27TEX2825	..MARKER-ALUMINUM FOIL SUPPLIER CODE: V89954	108120	1
855	S233-13	..SEAL- SUPPLIER CODE: V51896 OPTIONAL PART: S233-6 V51896	108120	1
855	S233-6	..SEAL- SUPPLIER CODE: V51896 OPTIONAL PART: S233-13 V51896	108120	1
860	WCS225-7	..SEAL ASSY-SHAFT SUPPLIER CODE: V51074 ATTACHING PARTS	108120	2
- 861	MS35206-202	..SCREW -------*-------	108120	4
862	NAS514P440-6P	..SCREW	108120	4
863	NAS1801-04-5	..SCREW	108120	2
864	AN960-4L	..WASHER	108120	2
866	92-1660-40	..NUT SUPPLIER CODE: V72962 SPECIFICATION NUMBER: BACN10DN40 OPTIONAL PART: 92-1660-440 V15653	108120	2

MISSING ITEM NUMBERS NOT APPLICABLE

- ITEM NOT ILLUSTRATED

BOEING PROPRIETARY - Copyright © - Unpublished Work - See title page for details.

FIG ITEM	PART NUMBER	1 2 3 4 5 6 7 NOMENCLATURE	EFFECT FROM TO	UNITS PER ASSY
55				
870	285T0530-1	..ENCLOSURE ASSY-	108120	1
		SUPPLIER CODE:		
		V89954		
		OPTIONAL PART:		
		285T0530-2		
		V89954		
870	285T0530-2	..ENCLOSURE ASSY-	108120	1
		SUPPLIER CODE:		
		V89954		
		OPTIONAL PART:		
		285T0530-1		
		V89954		
875	NAS1801-04-5	...SCREW	108120	4
880	NAS514P440-4P	...SCREW	108120	4
885	NAS514P440-5P	...SCREW	108120	12
890	AN960D4	...WASHER	108120	4
900	285T0528-1	...PANEL ASSY-FRONT	108120	1
		SUPPLIER CODE:		
		V89954		
		USED ON:		
		285T0530-1		
900	285T0528-3	...PANEL ASSY-FRONT	108120	1
		SUPPLIER CODE:		
		V89954		
		USED ON:		
		285T0530-2		
905	SF6G6CBB5D	....NUT	108120	4
		SUPPLIER CODE:		
		V12324		
		SPECIFICATION NUMBER:		
		BACN10PA06-6		
910	BACS21DD1B	....STUD ASSY	108120	4
		SUPPLIER CODE:		
		V08524		
		SPECIFICATION NUMBER:		
		BACS21DD1B		
915	285T0528-2	....PANEL-	108120	1
		SUPPLIER CODE:		
		V89954		
		USED ON:		
		285T0528-1		
915	285T0528-4	....PANEL-	108120	1
		SUPPLIER CODE:		
		V89954		
		USED ON:		
		285T0528-3		
920	285T0529-1	...COVER ASSY-SHELL	108120	2
		SUPPLIER CODE:		
		V89954		

MISSING ITEM NUMBERS NOT APPLICABLE

– ITEM NOT ILLUSTRATED

BOEING PROPRIETARY - Copyright © - Unpublished Work - See title page for details.

FIG ITEM	PART NUMBER	1 2 3 4 5 6 7 NOMENCLATURE	EFFECT FROM TO	UNITS PER ASSY
55				
925	285T0529-3	...PANEL ASSY-SIDE	108120	1
		SUPPLIER CODE:		
		V89954		
930	RMF9201M40	....NUTPLATE	108120	4
		SUPPLIER CODE:		
		V72962		
		SPECIFICATION NUMBER:		
		BACN10JN04		
		OPTIONAL PART:		
		BRFM20A04L		
		V52828		
		MF1000-04BAC		
		V15653		
		NS103218-40		
		V80539		
		MF53049-04		
		V15653		
		T8124S04S		
		V11815		
		VN252A40L		
		V92215		
		ATTACHING PARTS		
- 935	BACR15BA3AD	....RIVET-	108120	8
		SIZE DETERMINED ON INSTL.		
		-------*-------		
940	F22A27M22-40	....NUT-ANCHOR	108120	4
		SUPPLIER CODE:		
		V0217B		
		ATTACHING PARTS		
- 945	BACR15BA2AD	....RIVET-	108120	8
		SIZE DETERMINED ON INSTL.		
		-------*-------		
950	285T0529-5	....PANEL-	108120	1
		SUPPLIER CODE:		
		V89954		
955	285T0529-4	...PANEL ASSY-SIDE	108120	1
		SUPPLIER CODE:		
		V89954		

MISSING ITEM NUMBERS NOT APPLICABLE

- ITEM NOT ILLUSTRATED

BOEING PROPRIETARY - Copyright © - Unpublished Work - See title page for details.

FIG ITEM	PART NUMBER	1 2 3 4 5 6 7 NOMENCLATURE	EFFECT FROM TO	UNITS PER ASSY
55				
960	RMF9201M40	....NUTPLATE SUPPLIER CODE: V72962 SPECIFICATION NUMBER: BACN10JN04 OPTIONAL PART: BRFM20A04L V52828 MF1000-04BAC V15653 NS103218-40 V80539 MF53049-04 V15653 T8124S04S V11815 VN252A40L V92215 ATTACHING PARTS	108120	4
- 965	BACR15BA3AD	....RIVET- SIZE DETERMINED ON INSTL. -------*-------	108120	8
970	F22A27M22-40	....NUT-ANCHOR SUPPLIER CODE: V0217B ATTACHING PARTS	108120	4
- 975	BACR15BA2AD	....RIVET- SIZE DETERMINED ON INSTL. -------*-------	108120	8
980	285T0529-6	....PANEL- SUPPLIER CODE: V89954	108120	1
982	285T0527-1	...PANEL-REAR SUPPLIER CODE: V89954	108120	1
984	285T0525-3	..MODULE ASSY-ELECT. SUPPLIER CODE: V89954	108120	1
- 986	285T0525-4	...MODULE ASSY- SUPPLIER CODE: V89954	108120	1
988	285T0250-4	....PMD ASSY- SUPPLIER CODE: V89954	108120	3
990	BAC27TEX2007	.....DECAL- OPTIONAL PART: WHB673-1D0X0D5 V85480	108120	1

MISSING ITEM NUMBERS NOT APPLICABLE

- ITEM NOT ILLUSTRATED

BOEING PROPRIETARY - Copyright © - Unpublished Work - See title page for details.

FIG ITEM	PART NUMBER	1 2 3 4 5 6 7 NOMENCLATURE	EFFECT FROM TO	UNITS PER ASSY
55 990	WHB673-1D0X0D5	.....DECAL- SUPPLIER CODE: V85480 OPTIONAL PART: BAC27TEX2007	108120	1

MISSING ITEM NUMBERS NOT APPLICABLE

– ITEM NOT ILLUSTRATED

BOEING PROPRIETARY - Copyright © - Unpublished Work - See title page for details.

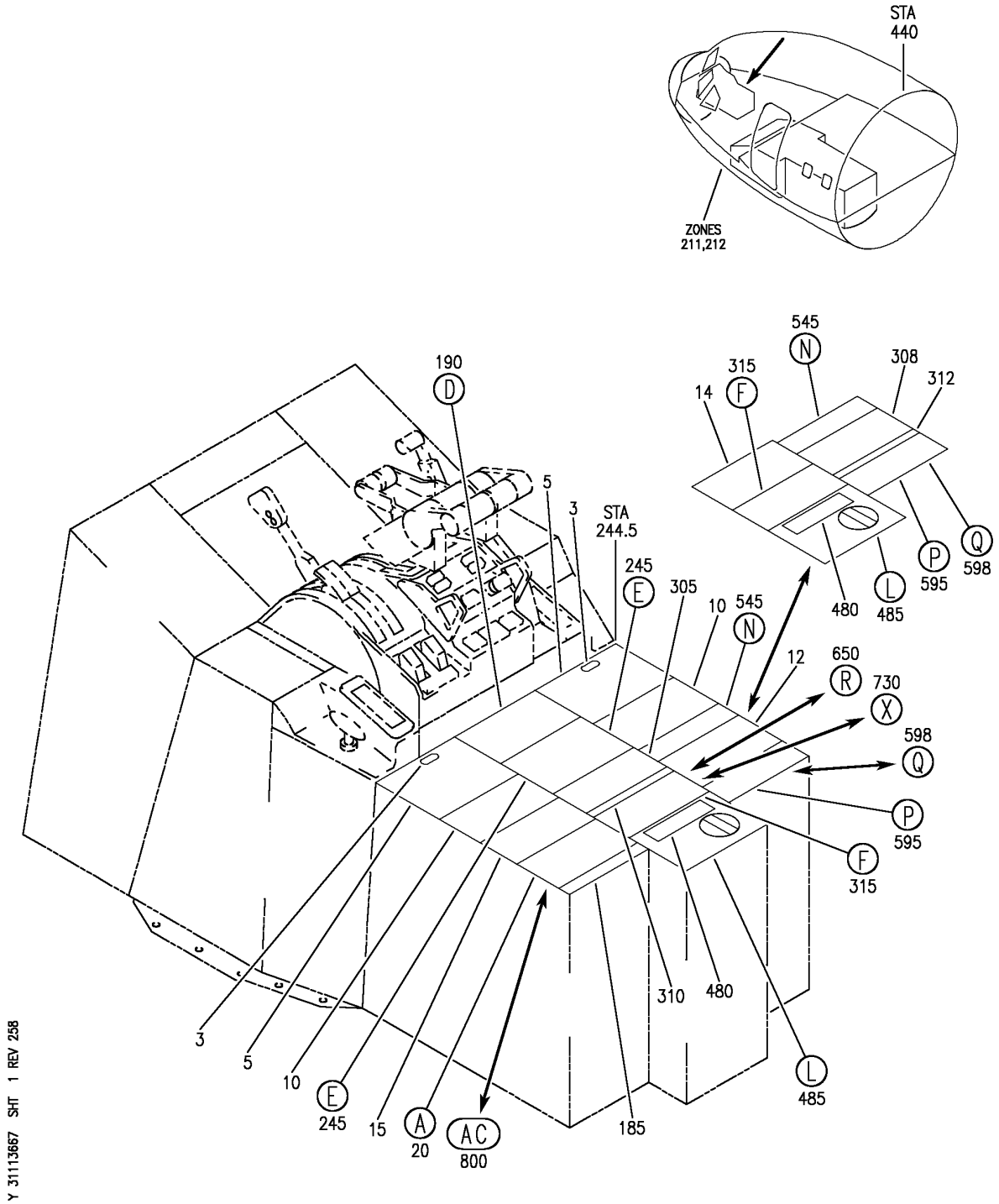

PANEL INSTL-P8 ELECTRONICS (CONTROL STAND AFT ELECTRONIC PANEL ONLY)
FIGURE 67 (SHEET 1)

BOEING PROPRIETARY - Copyright © - Unpublished Work - See title page for details.

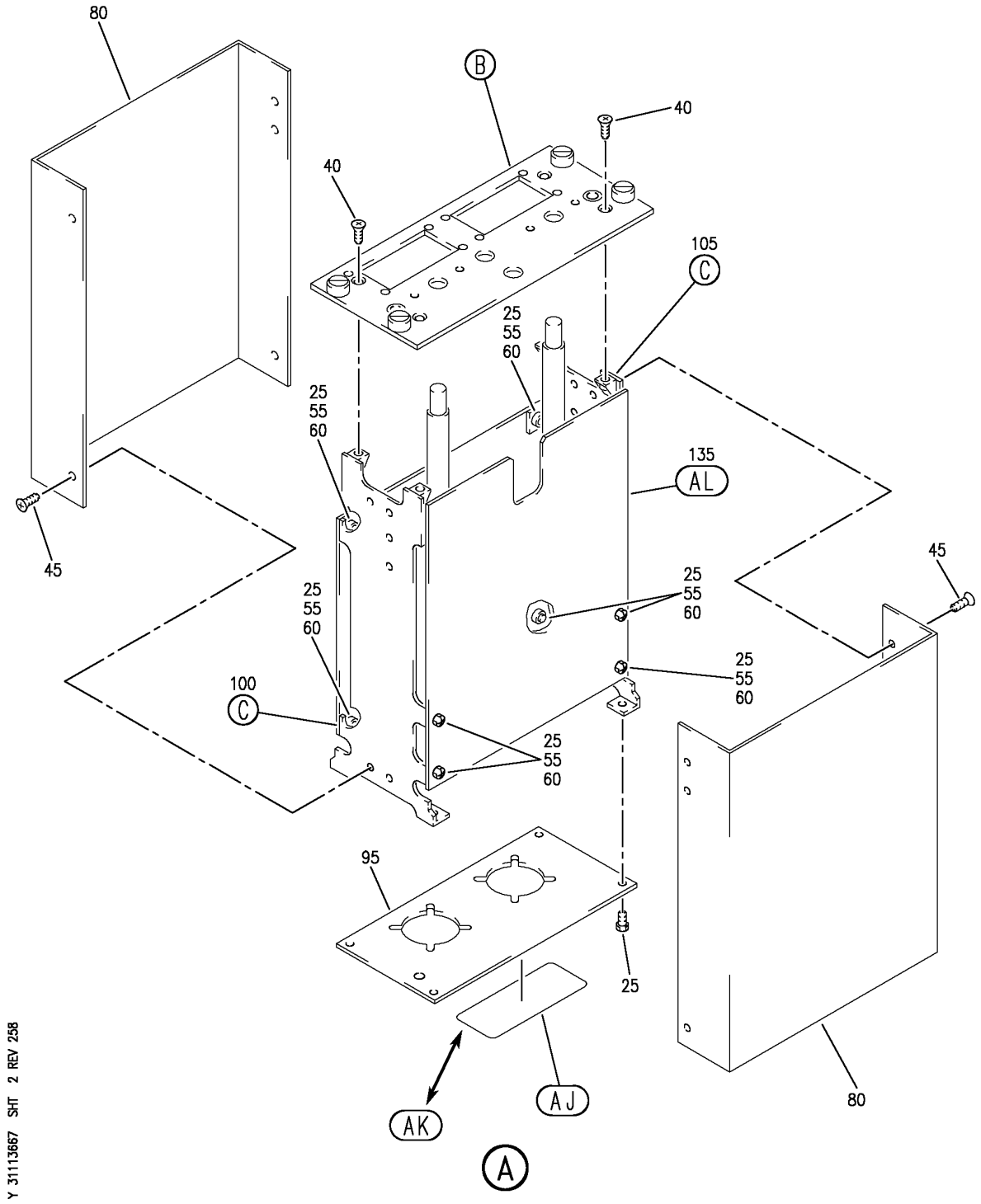

PANEL INSTL-P8 ELECTRONICS (CONTROL STAND AFT ELECTRONIC PANEL ONLY)
FIGURE 67 (SHEET 2)

BOEING PROPRIETARY - Copyright © - Unpublished Work - See title page for details.

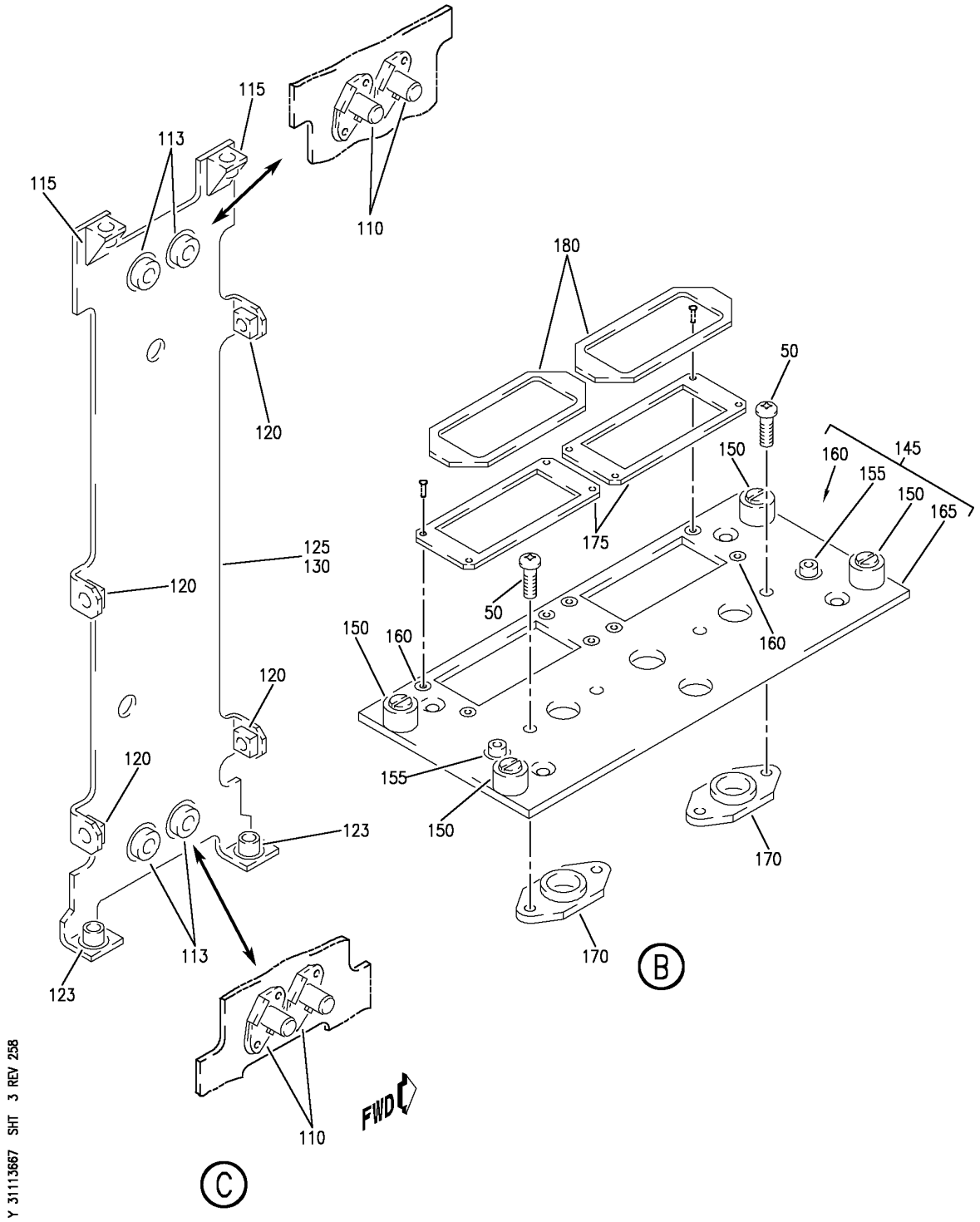

PANEL INSTL-P8 ELECTRONICS (CONTROL STAND AFT ELECTRONIC PANEL ONLY)
FIGURE 67 (SHEET 3)

BOEING PROPRIETARY - Copyright © - Unpublished Work - See title page for details.

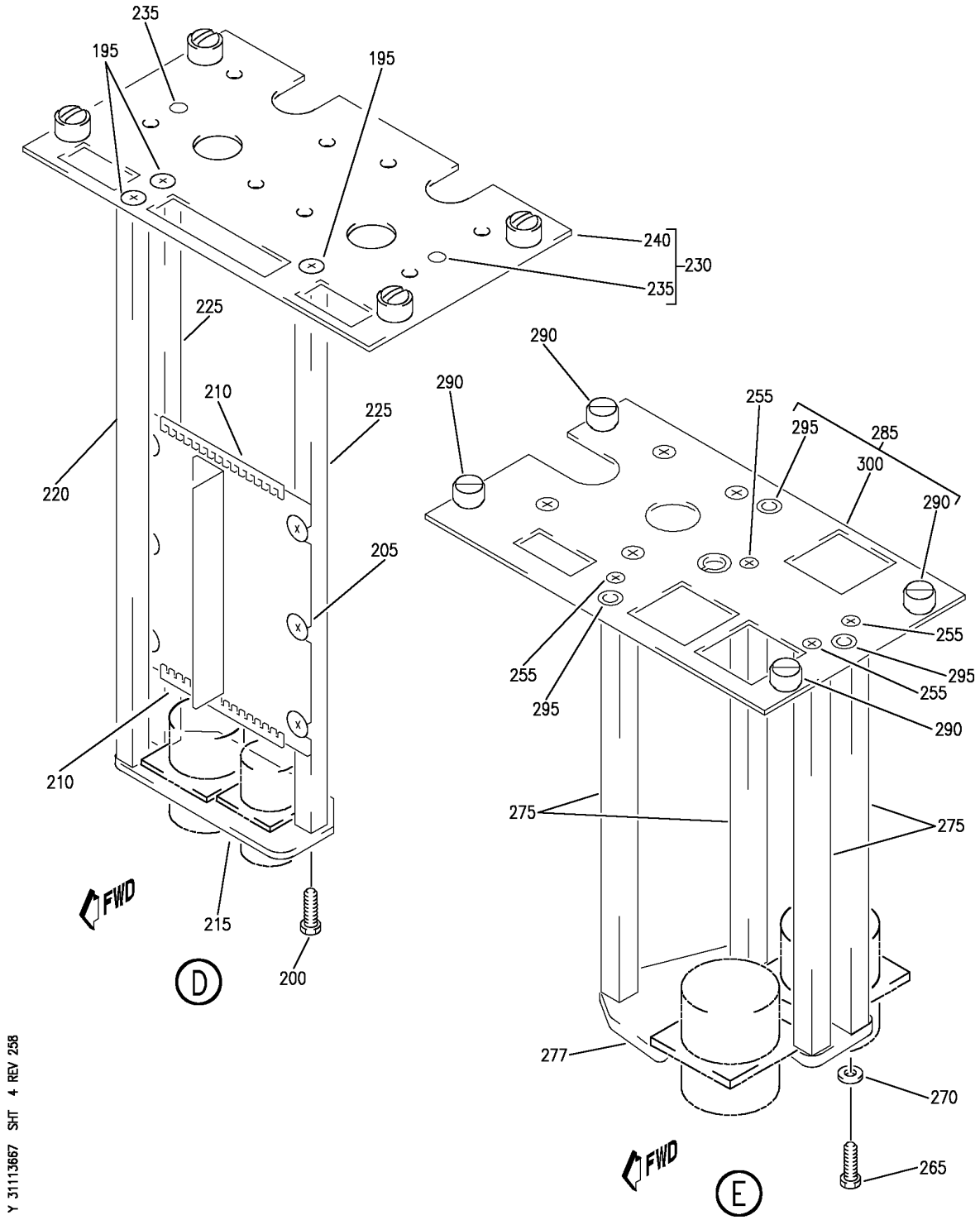

PANEL INSTL-P8 ELECTRONICS (CONTROL STAND AFT ELECTRONIC PANEL ONLY)
FIGURE 67 (SHEET 4)

BOEING PROPRIETARY - Copyright © - Unpublished Work - See title page for details.

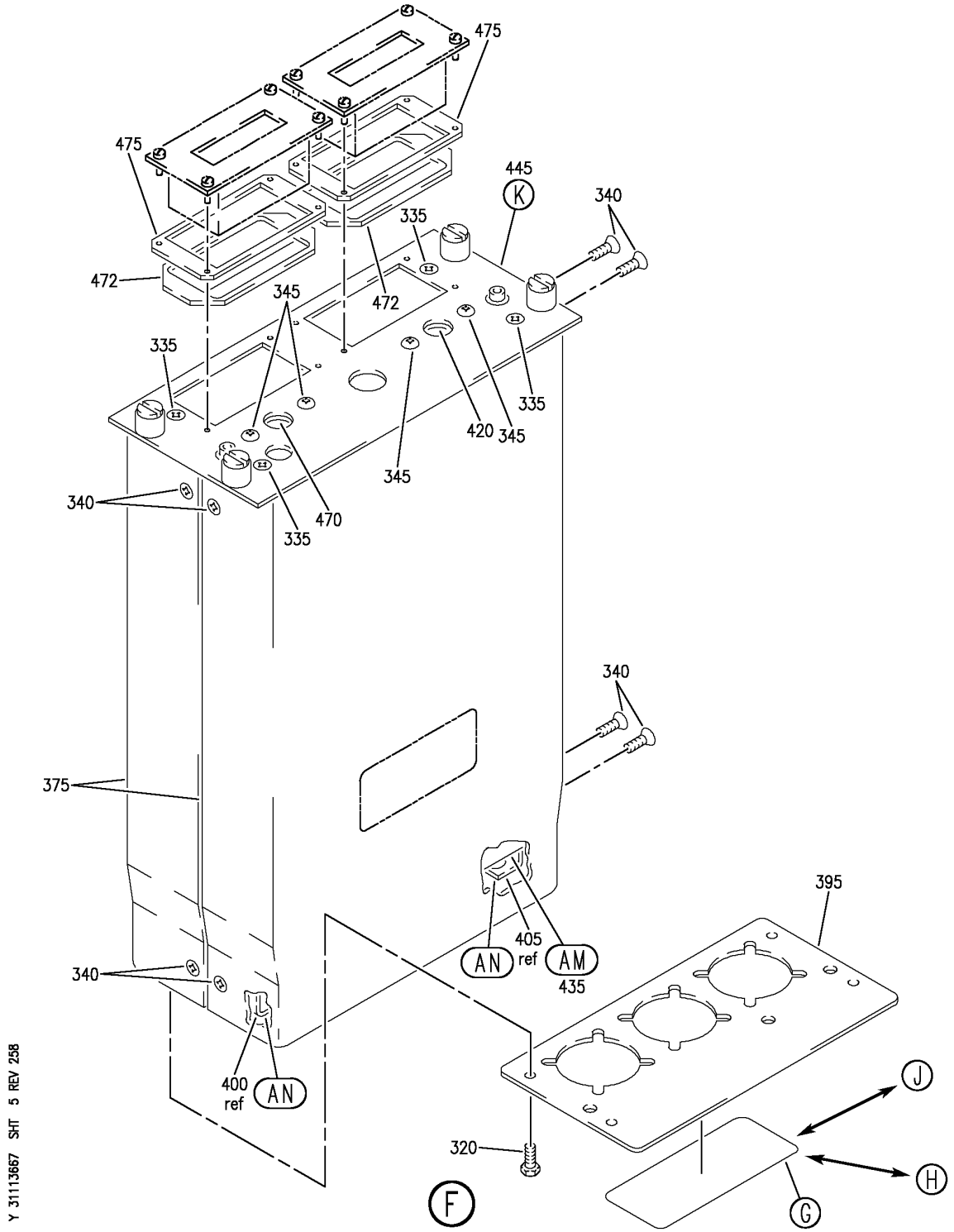

PANEL INSTL-P8 ELECTRONICS (CONTROL STAND AFT ELECTRONIC PANEL ONLY)
FIGURE 67 (SHEET 5)

BOEING PROPRIETARY - Copyright © - Unpublished Work - See title page for details.

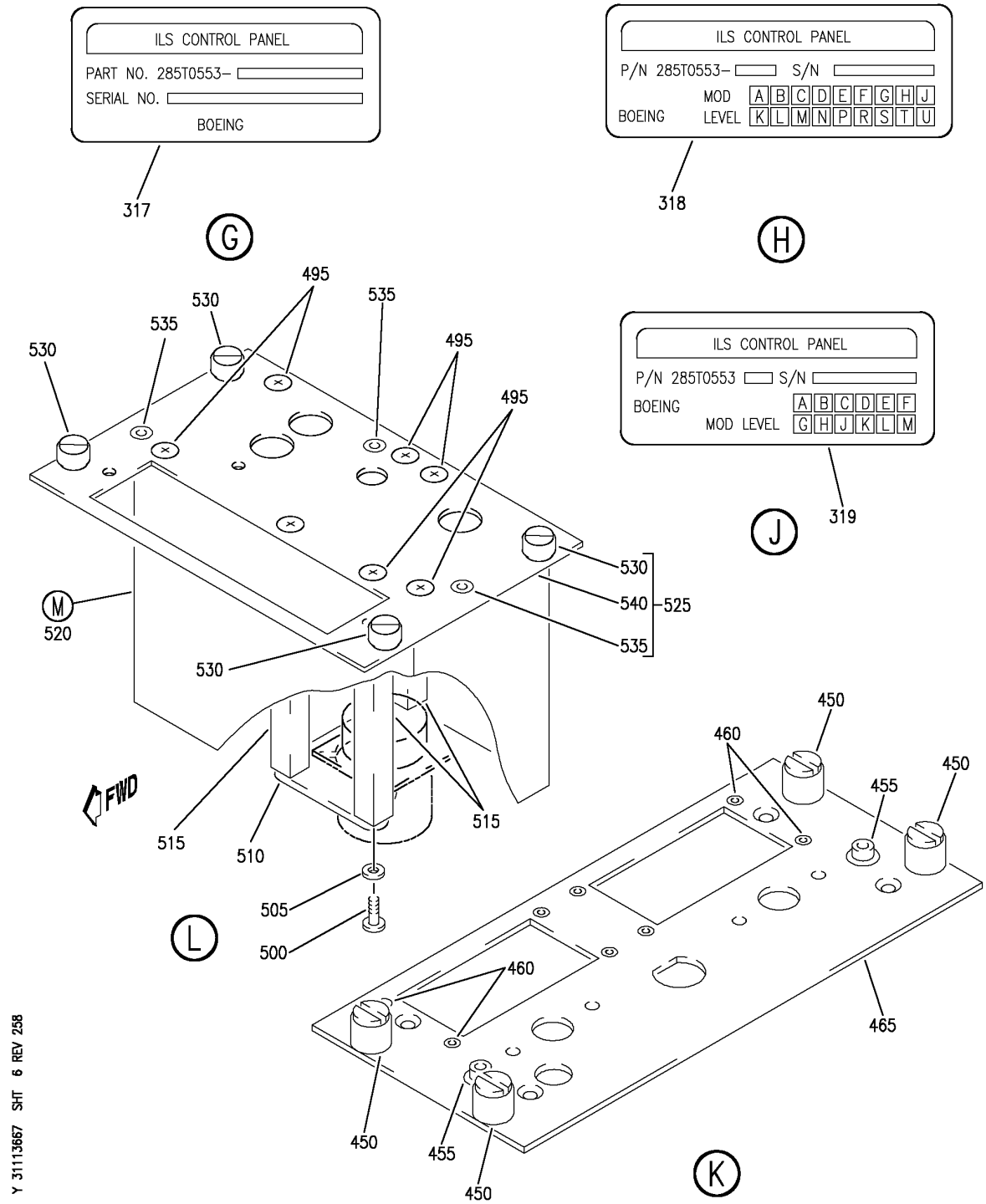

PANEL INSTL-P8 ELECTRONICS (CONTROL STAND AFT ELECTRONIC PANEL ONLY)
FIGURE 67 (SHEET 6)

BOEING PROPRIETARY - Copyright © - Unpublished Work - See title page for details.

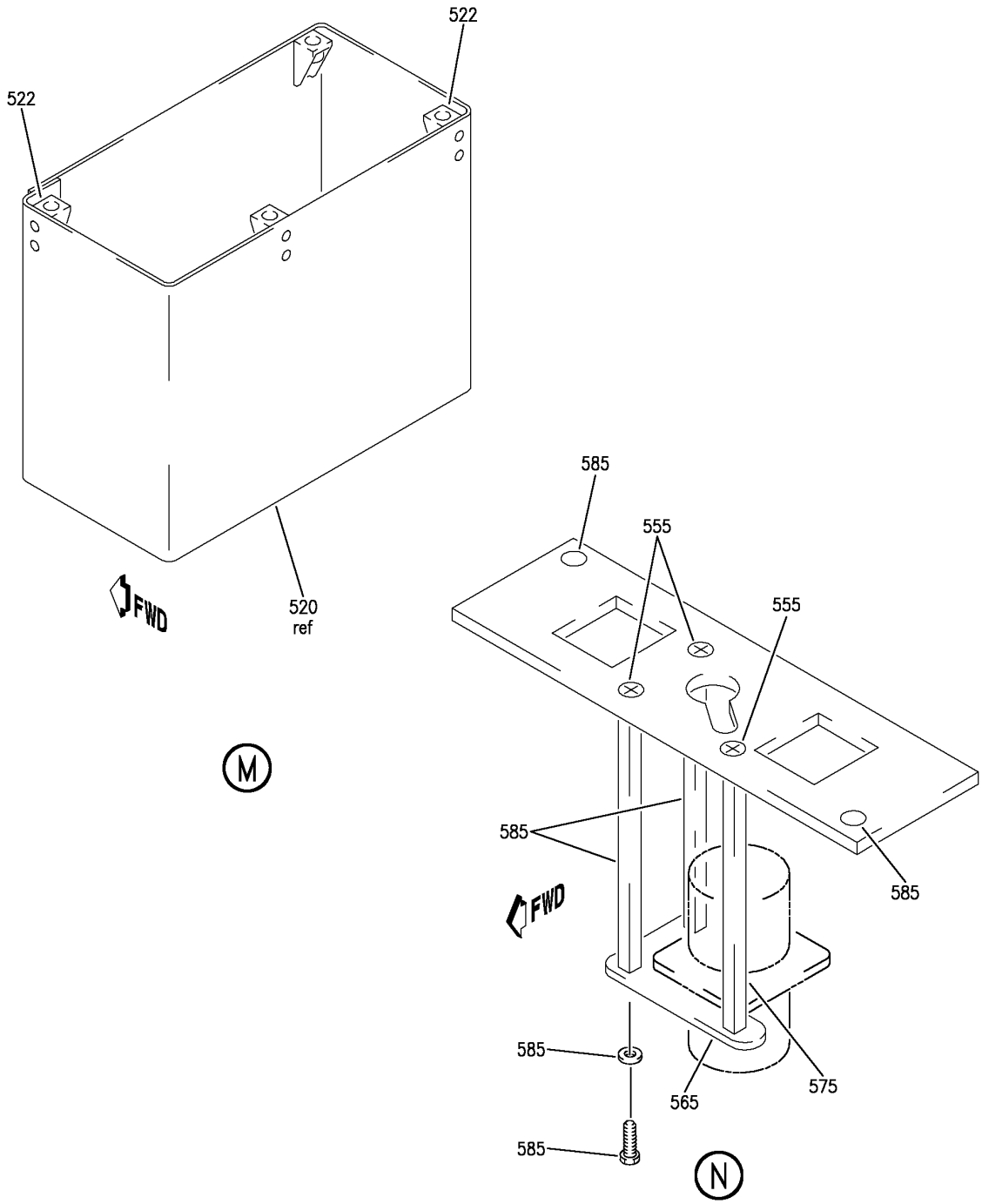

PANEL INSTL-P8 ELECTRONICS (CONTROL STAND AFT ELECTRONIC PANEL ONLY)
FIGURE 67 (SHEET 7)

BOEING PROPRIETARY - Copyright © - Unpublished Work - See title page for details.

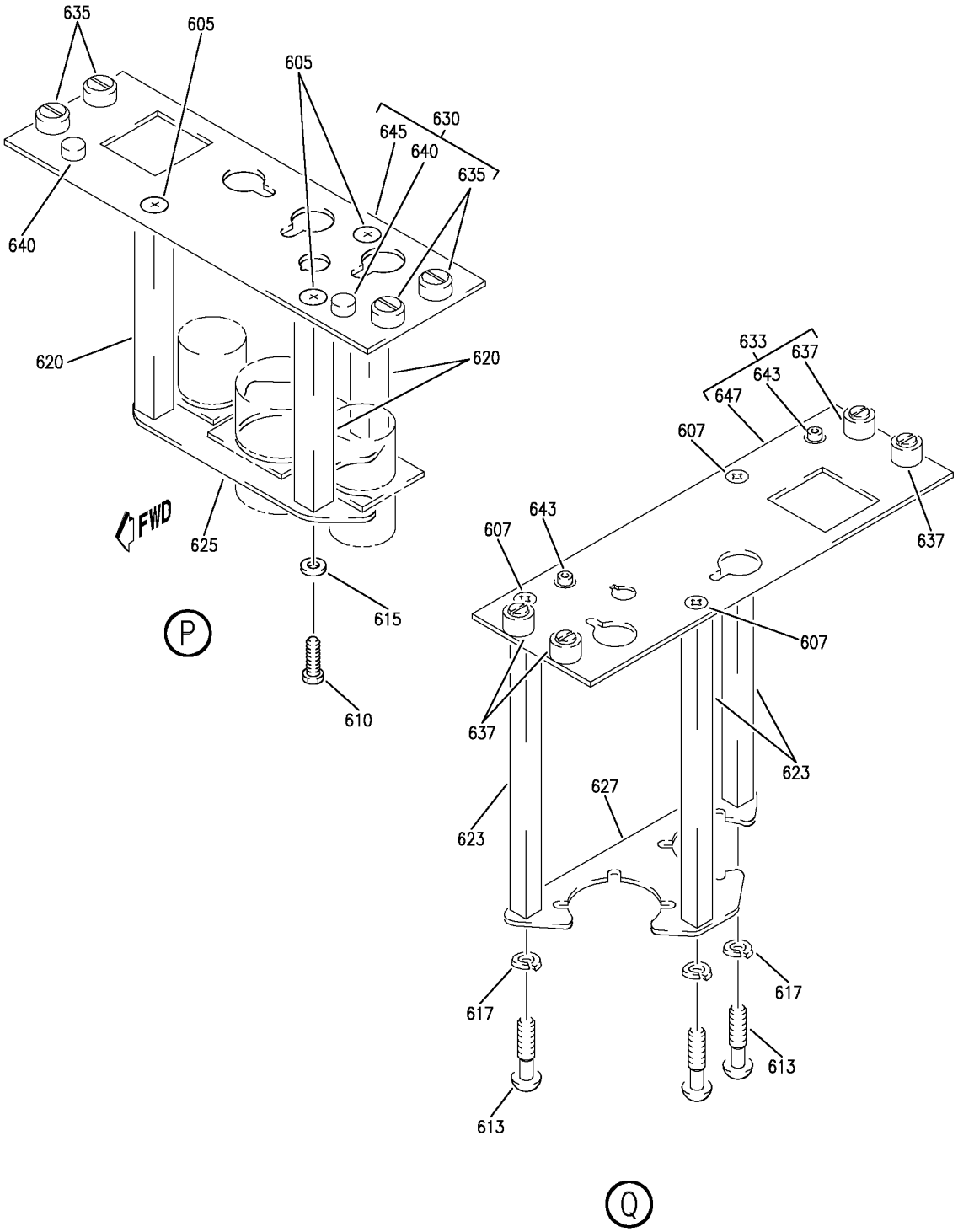

PANEL INSTL-P8 ELECTRONICS (CONTROL STAND AFT ELECTRONIC PANEL ONLY)
FIGURE 67 (SHEET 8)

BOEING PROPRIETARY - Copyright © - Unpublished Work - See title page for details.

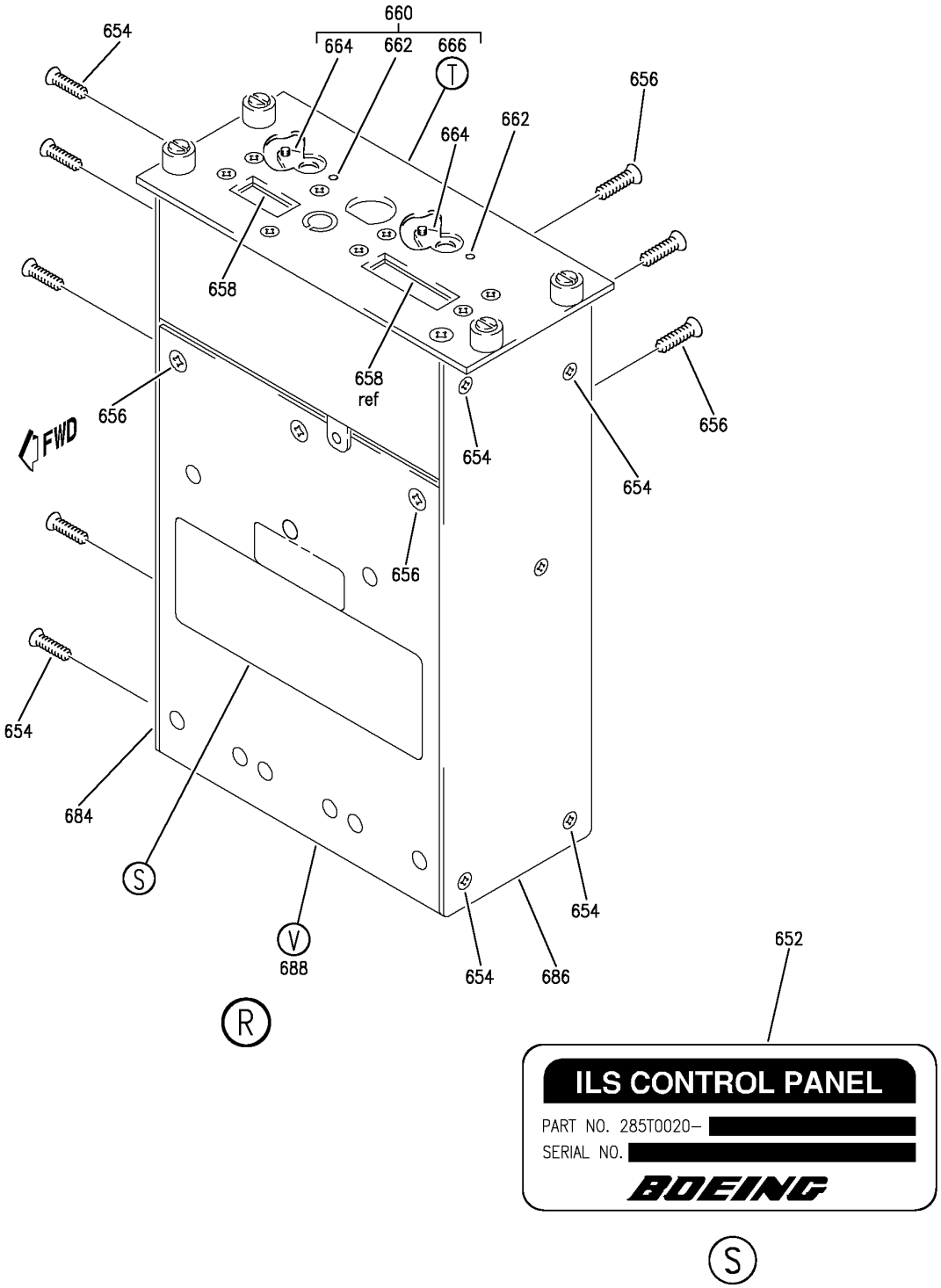

Y 31113667 SHT 9 REV 254

PANEL INSTL-P8 ELECTRONICS (CONTROL STAND AFT ELECTRONIC PANEL ONLY)
FIGURE 67 (SHEET 9)

BOEING PROPRIETARY - Copyright © - Unpublished Work - See title page for details.

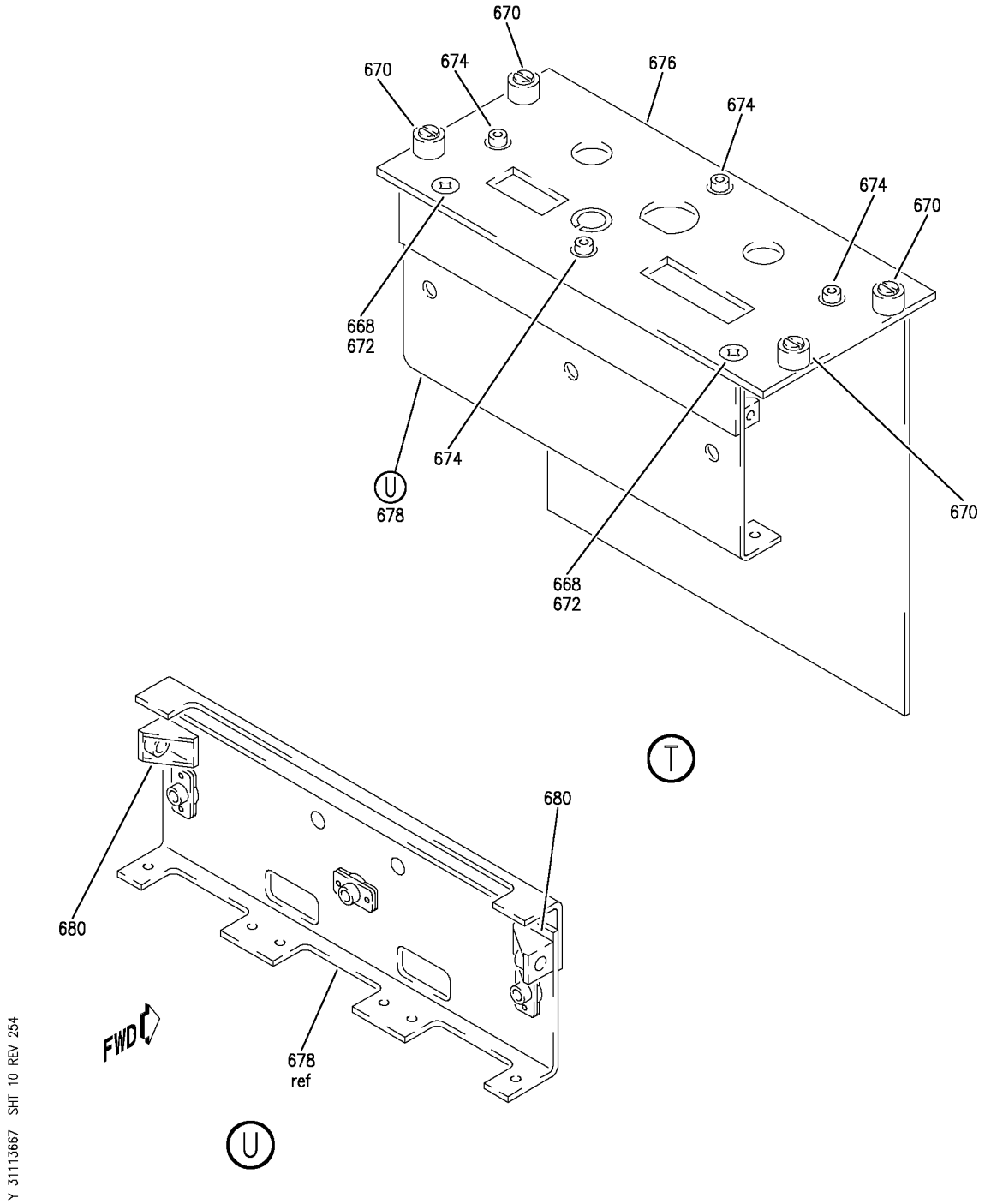

PANEL INSTL-P8 ELECTRONICS (CONTROL STAND AFT ELECTRONIC PANEL ONLY)
FIGURE 67 (SHEET 10)

BOEING PROPRIETARY - Copyright © - Unpublished Work - See title page for details.

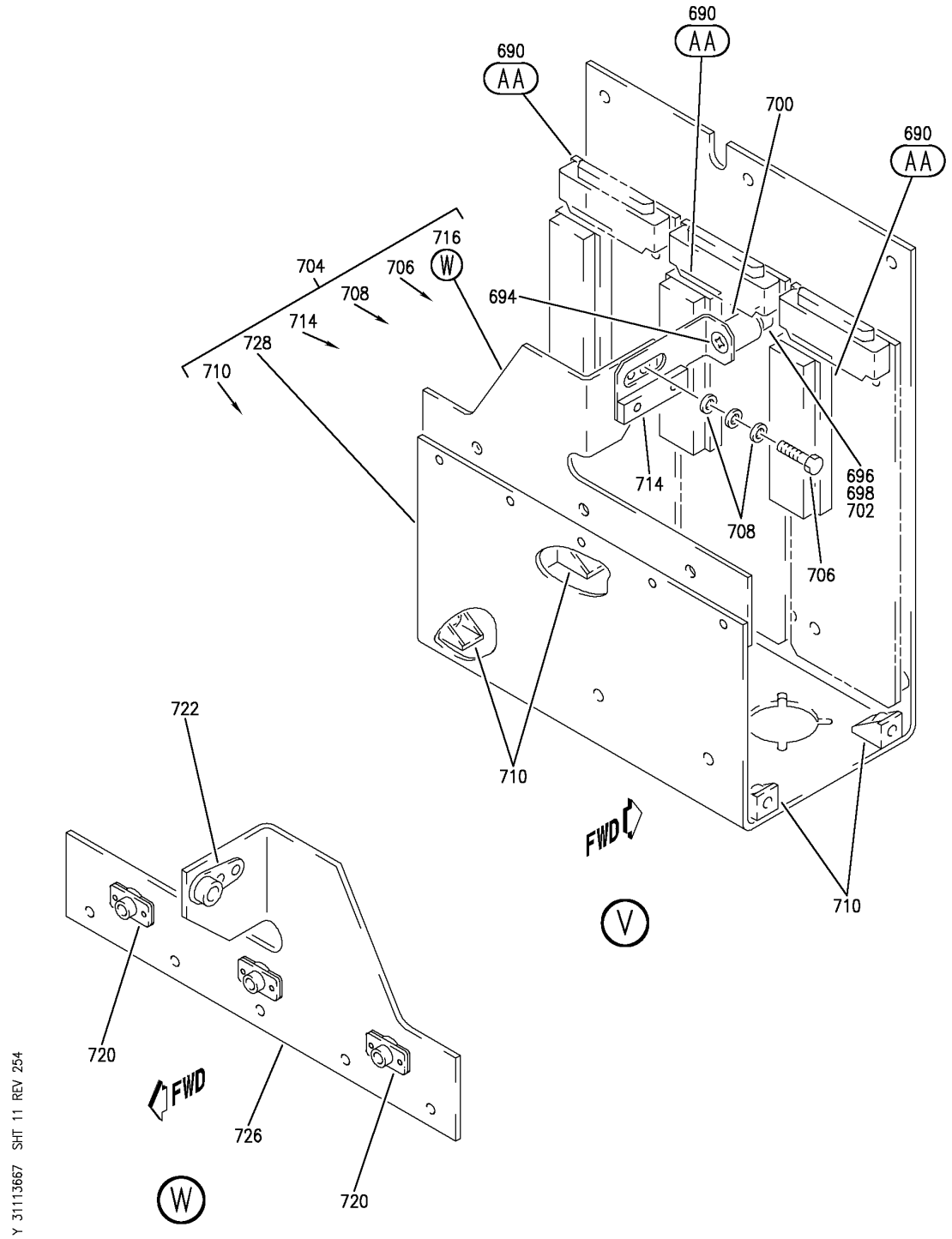

PANEL INSTL-P8 ELECTRONICS (CONTROL STAND AFT ELECTRONIC PANEL ONLY)
FIGURE 67 (SHEET 11)

BOEING PROPRIETARY - Copyright © - Unpublished Work - See title page for details.

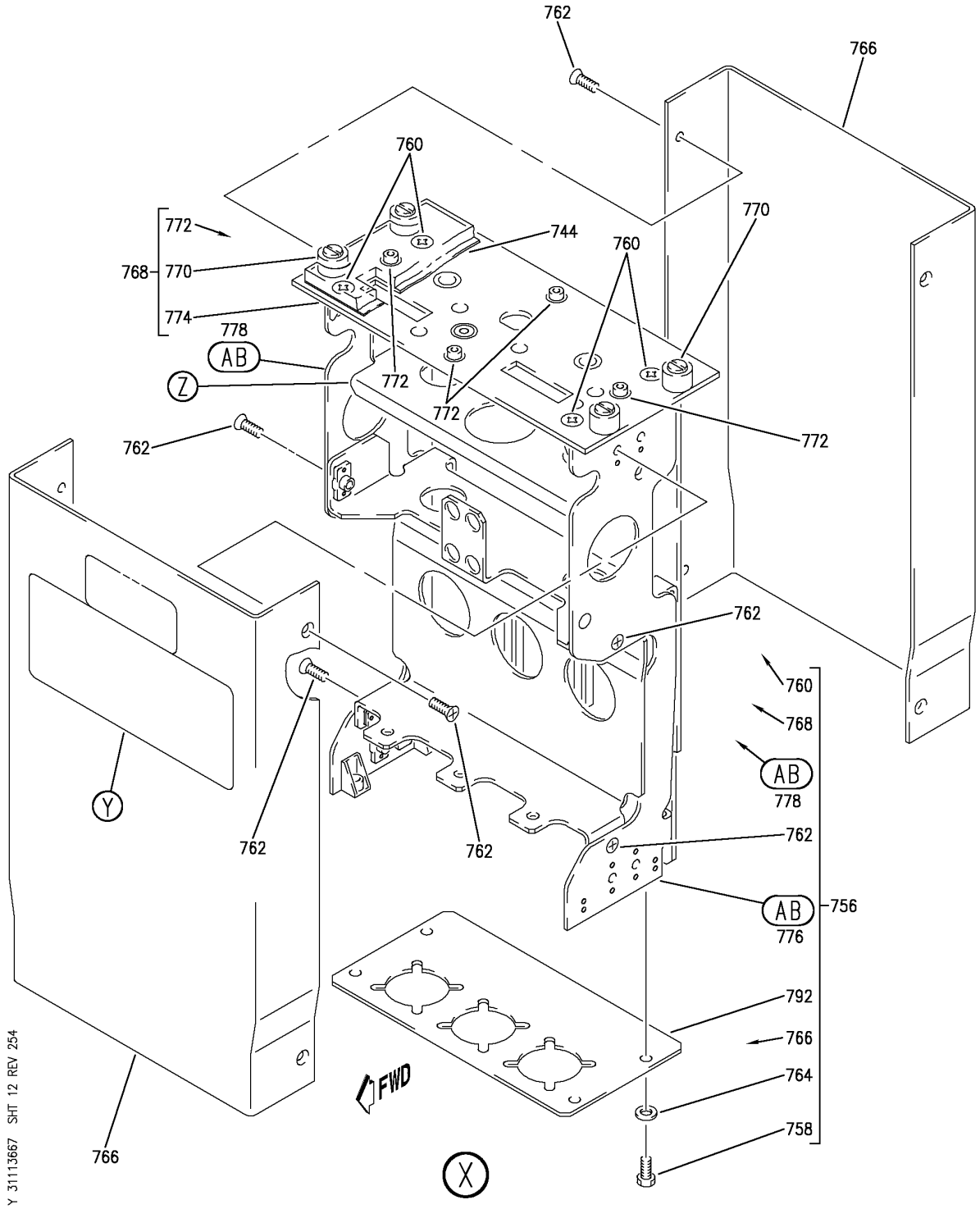

PANEL INSTL-P8 ELECTRONICS (CONTROL STAND AFT ELECTRONIC PANEL ONLY)
FIGURE 67 (SHEET 12)

BOEING PROPRIETARY - Copyright © - Unpublished Work - See title page for details.

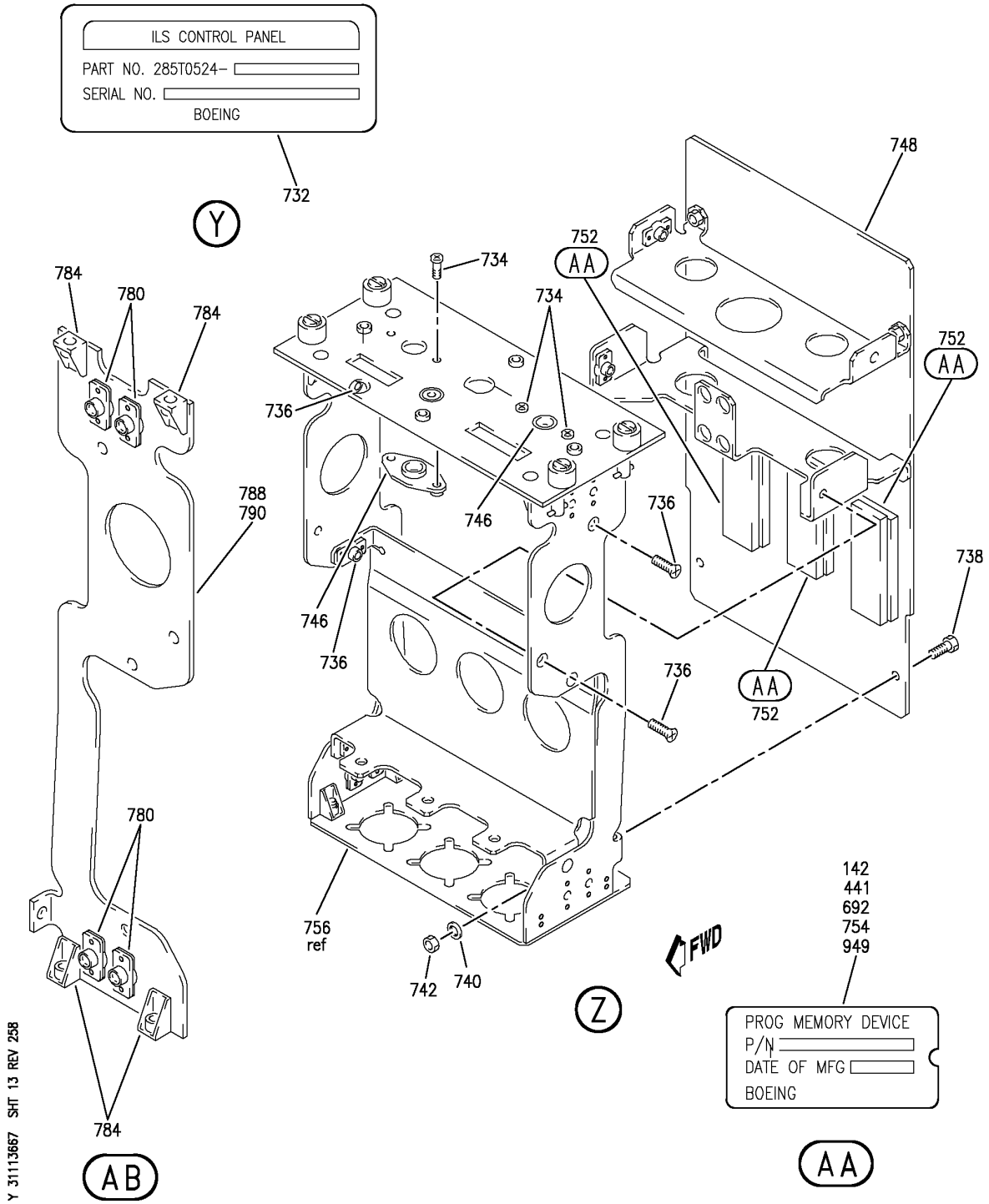

PANEL INSTL-P8 ELECTRONICS (CONTROL STAND AFT ELECTRONIC PANEL ONLY)
FIGURE 67 (SHEET 13)

BOEING PROPRIETARY - Copyright © - Unpublished Work - See title page for details.

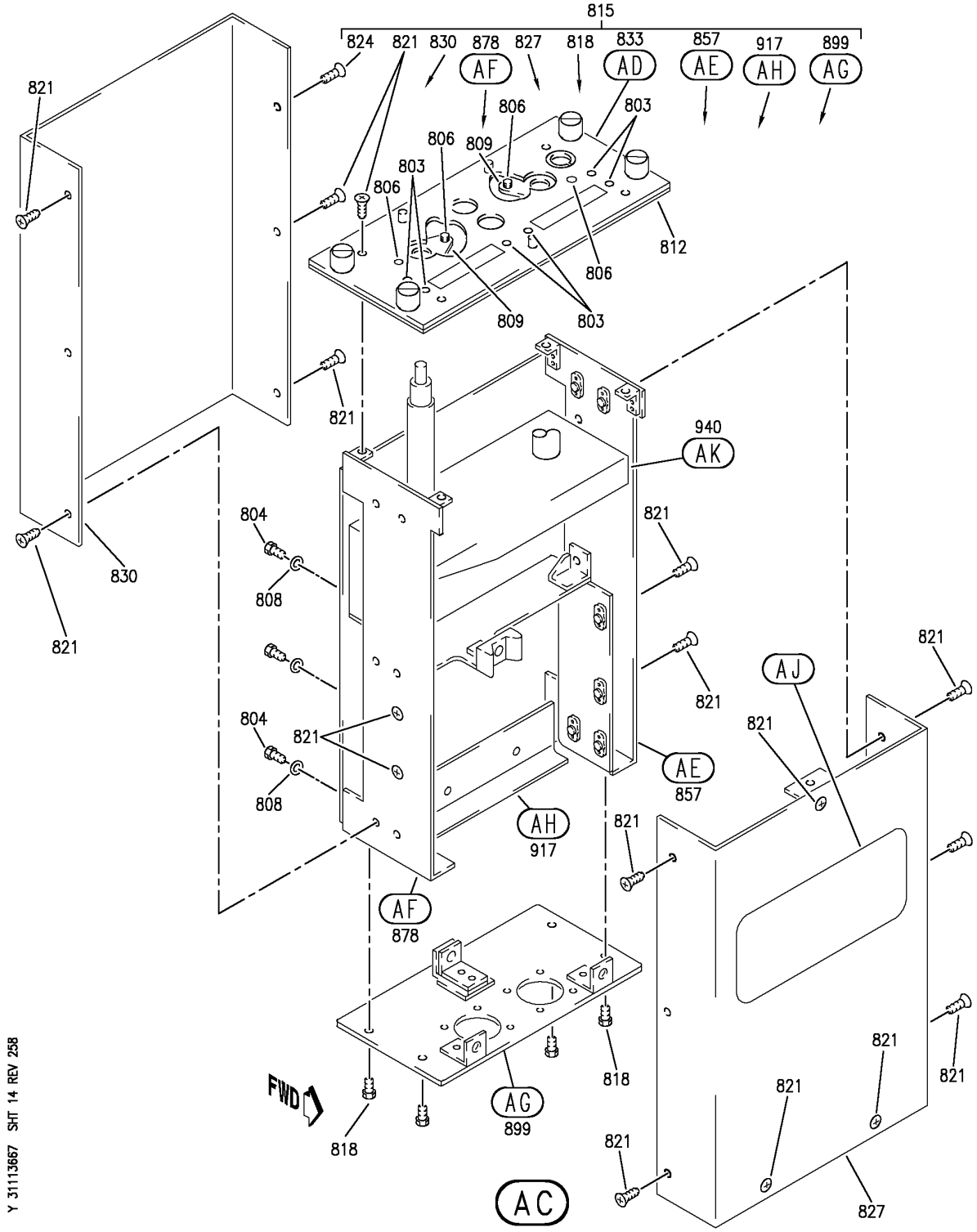

PANEL INSTL-P8 ELECTRONICS (CONTROL STAND AFT ELECTRONIC PANEL ONLY)
FIGURE 67 (SHEET 14)

BOEING PROPRIETARY - Copyright © - Unpublished Work - See title page for details.

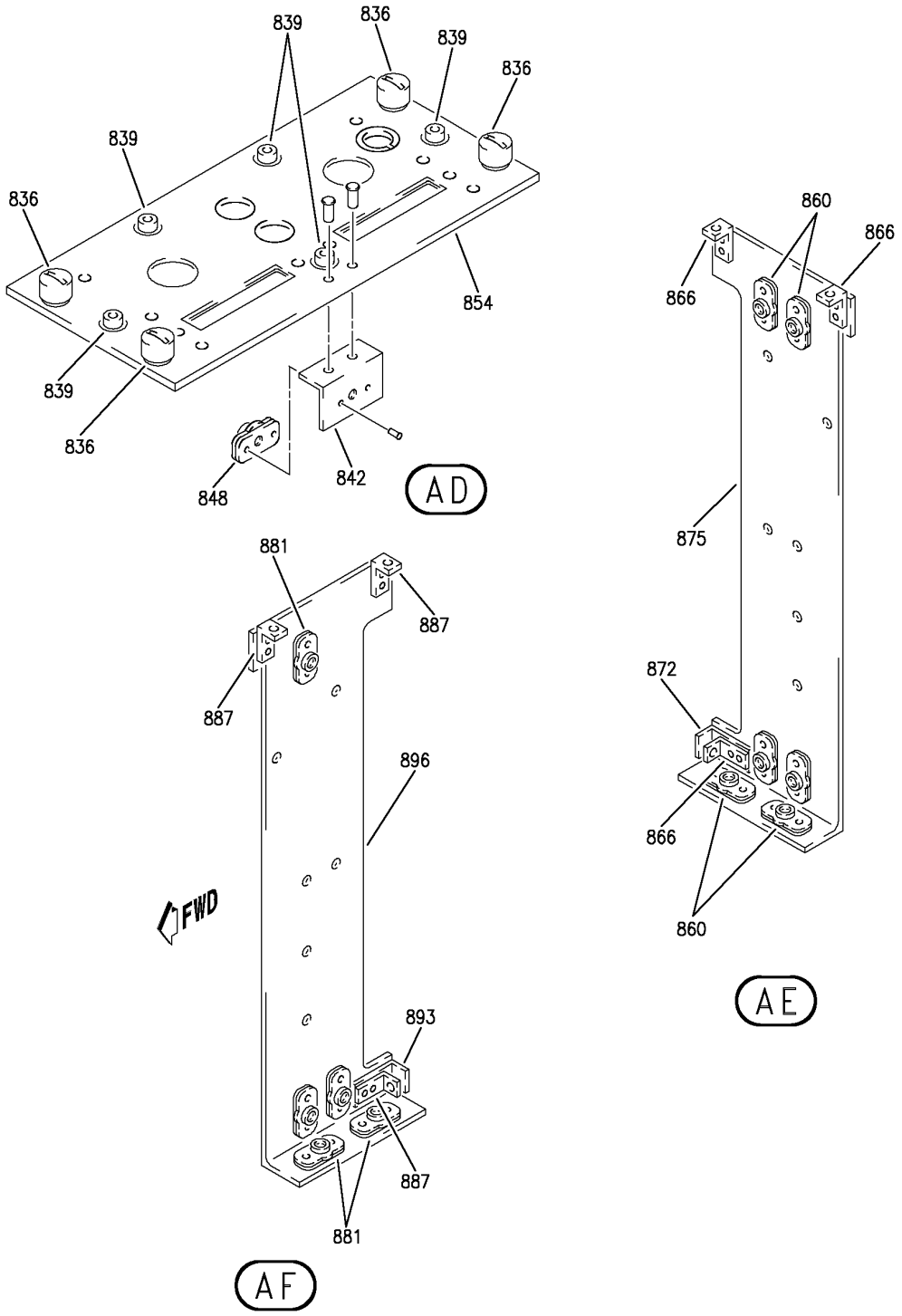

Y 31113667 SHT 15 REV 254

PANEL INSTL-P8 ELECTRONICS (CONTROL STAND AFT ELECTRONIC PANEL ONLY)
FIGURE 67 (SHEET 15)

BOEING PROPRIETARY - Copyright © - Unpublished Work - See title page for details.

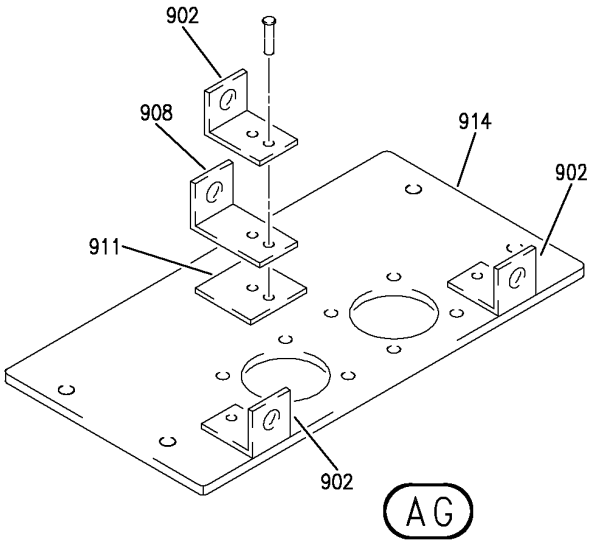

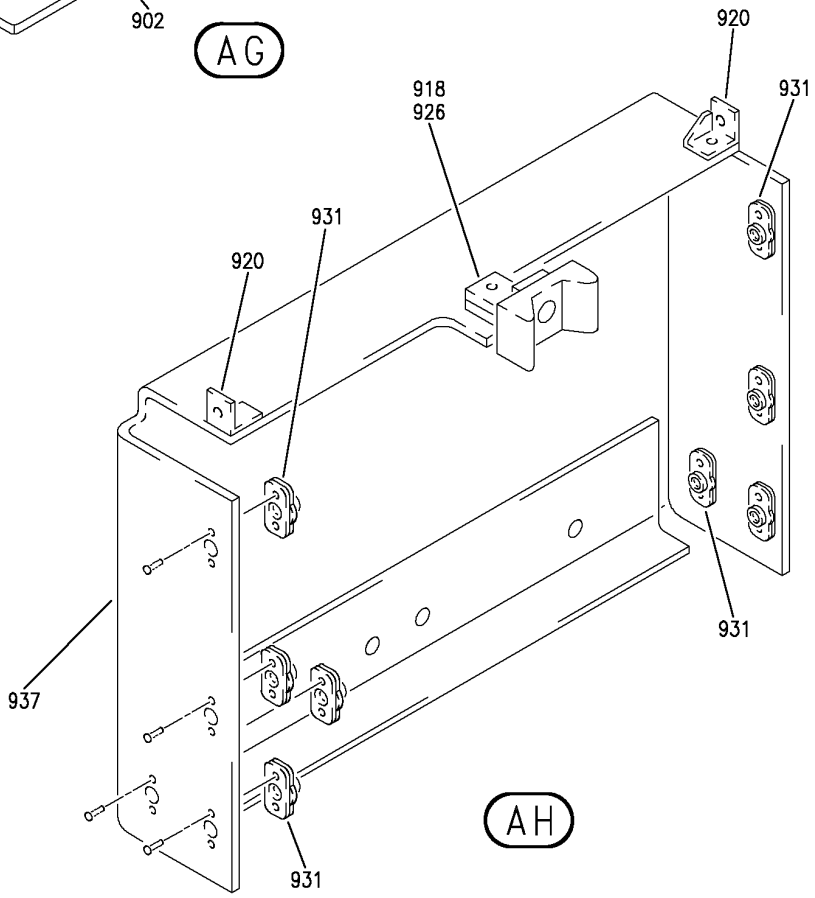

Y 31113667 SHT 16 REV 254

PANEL INSTL-P8 ELECTRONICS (CONTROL STAND AFT ELECTRONIC PANEL ONLY)
FIGURE 67 (SHEET 16)

BOEING PROPRIETARY - Copyright © - Unpublished Work - See title page for details.

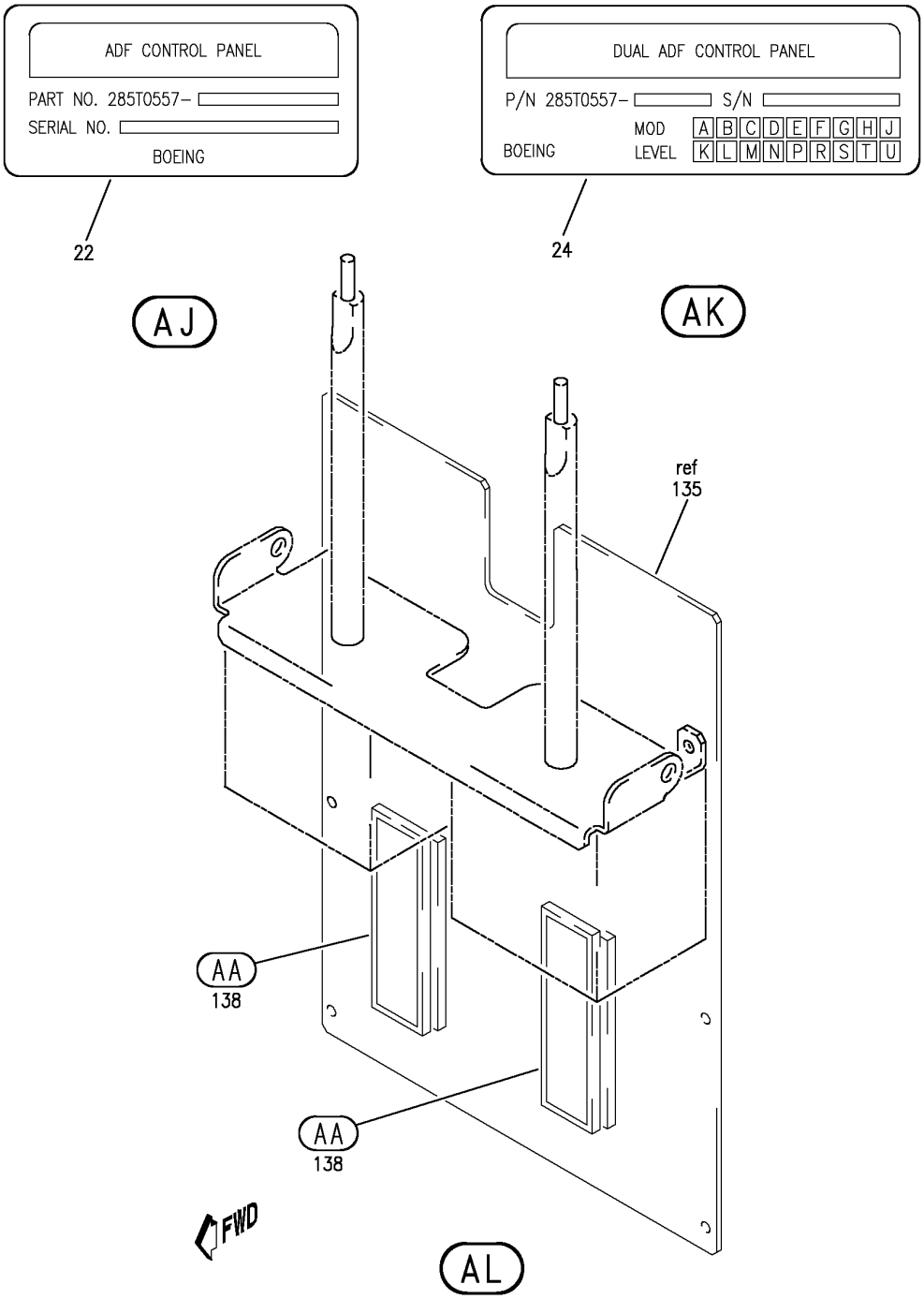

PANEL INSTL-P8 ELECTRONICS (CONTROL STAND AFT ELECTRONIC PANEL ONLY)
FIGURE 67 (SHEET 17)

BOEING PROPRIETARY - Copyright © - Unpublished Work - See title page for details.

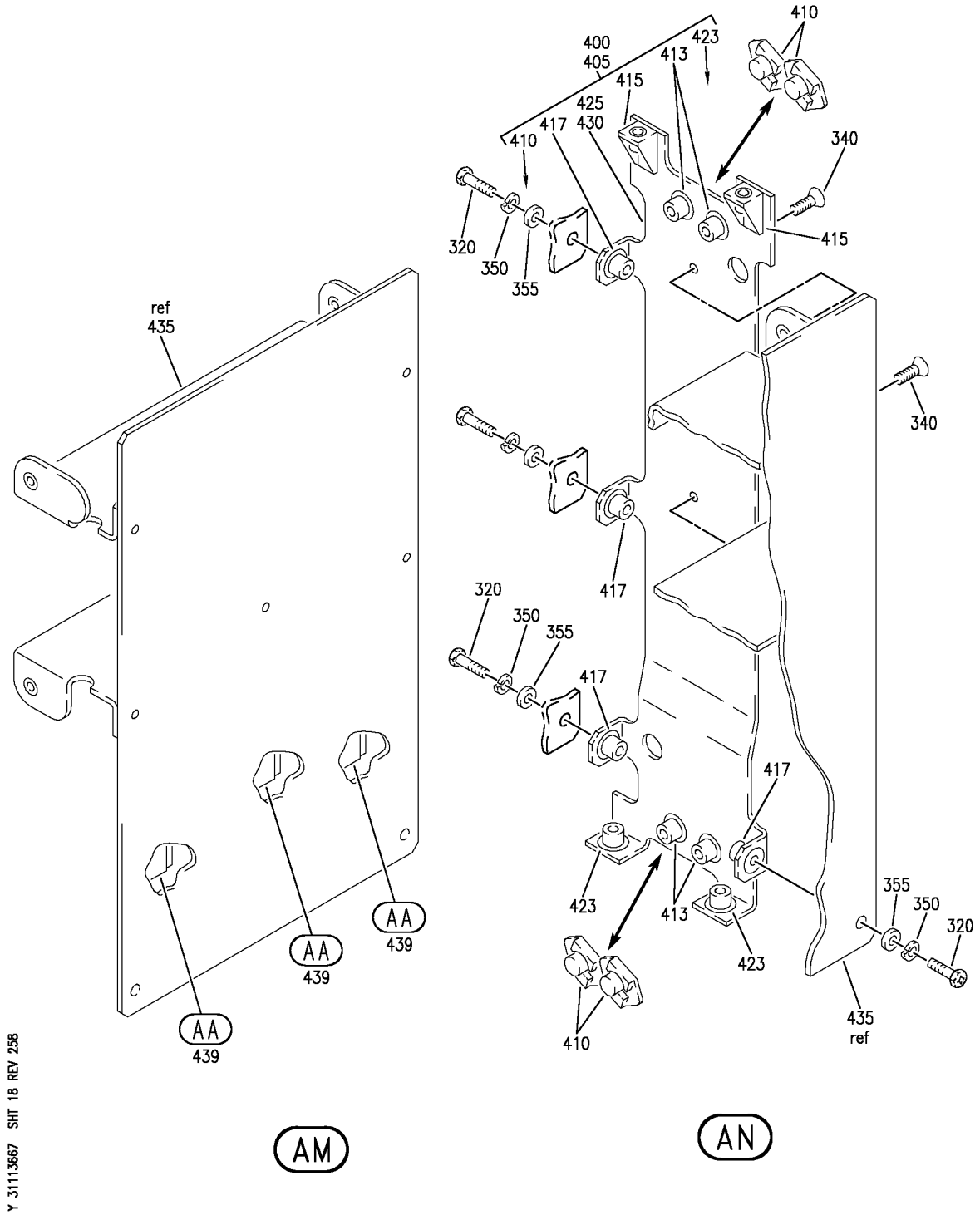

PANEL INSTL-P8 ELECTRONICS (CONTROL STAND AFT ELECTRONIC PANEL ONLY)
FIGURE 67 (SHEET 18)

BOEING PROPRIETARY - Copyright © - Unpublished Work - See title page for details.

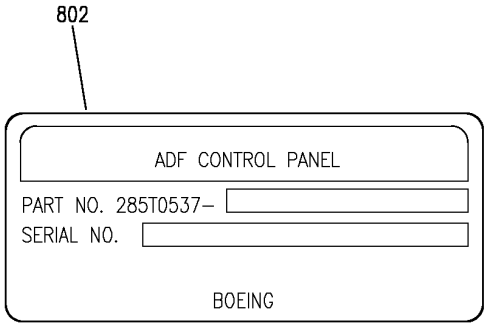

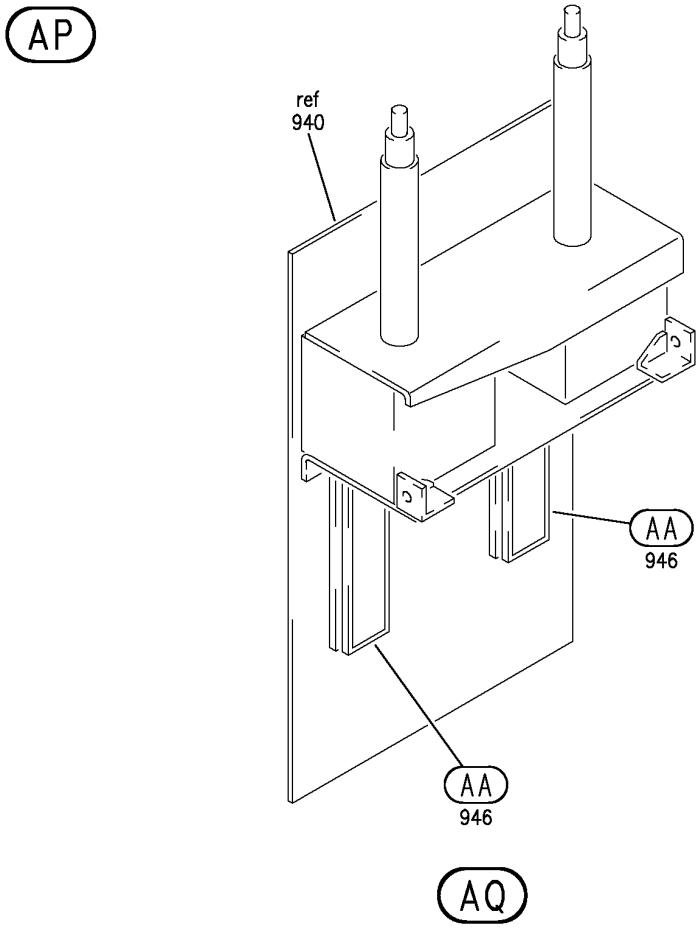

Y 31113667 SHT 19 REV 258

PANEL INSTL-P8 ELECTRONICS (CONTROL STAND AFT ELECTRONIC PANEL ONLY)
FIGURE 67 (SHEET 19)

BOEING PROPRIETARY - Copyright © - Unpublished Work - See title page for details.

FIG ITEM	PART NUMBER	1 2 3 4 5 6 7 NOMENCLATURE	EFFECT FROM TO	UNITS PER ASSY
67				
		PANEL INSTL-P8 ELECTRONICS (CONTROL STAND AFT ELECTRONIC PANEL ONLY)	504903	
- 1	233N6103-122	PANEL INSTL-P8 ELECTRONICS (CONTROL STAND AFT ELECTRONIC PANEL ONLY) FOR NHA/OTHER SYS DET SEE: 25-10-00-15B	504903	RF
3	BAC27TFDE0330	.DECAL	504903	2
5	5051-1-5	.PANEL ASSY-AUDIO SELECTOR (CUSTOMER FURNISHED) SUPPLIER CODE: V30242 ELECTRICAL EQUIP NUMBER: M00070 M00071 COMPONENT MAINT MANUAL REF: 23-50-31 FOR BREAKDOWN SEE: 23-51-01-05	504903	RF
10	G7406-07	.PANEL-VHF CONT (CUSTOMER FURNISHED) SUPPLIER CODE: V99837 ELECTRICAL EQUIP NUMBER: M00078 M00079 COMPONENT MAINT MANUAL REF: 23-12-73 FOR BREAKDOWN SEE: 23-12-02-03	504903	RF
14	G7406-07	.PANEL-VHF CONT (CUSTOMER FURNISHED) SUPPLIER CODE: V99837 ELECTRICAL EQUIP NUMBER: M00080 COMPONENT MAINT MANUAL REF: 23-12-73 FOR BREAKDOWN SEE: 23-12-02-03	504903	RF

MISSING ITEM NUMBERS NOT APPLICABLE

- ITEM NOT ILLUSTRATED

BOEING PROPRIETARY - Copyright © - Unpublished Work - See title page for details.

FIG ITEM	PART NUMBER	1 2 3 4 5 6 7 NOMENCLATURE	EFFECT FROM TO	UNITS PER ASSY
67				
15	2041220-0411	.PANEL-WEATHER RDR CONT (CUSTOMER FURNISHED) SUPPLIER CODE: V97896 ELECTRICAL EQUIP NUMBER: M00075 COMPONENT MAINT MANUAL REF: 34-41-12 FOR BREAKDOWN SEE: 34-43-02-02	504903	RF
20	285T0557-1	.PANEL ASSY-DUAL ADF CONT SUPPLIER CODE: V89954 ELECTRICAL EQUIP NUMBER: M01046 COMPONENT MAINT MANUAL REF: 34-57-62 FOR OTHER SYS DETAILS SEE: 11-31-05-65D 33-13-01-04 34-57-02-03	504903	1
22	BAC27TEX3471	..MARKER- SUPPLIER CODE: V89954 QUALIFIED OPTIONAL DATA: BAC27TEX3471 IS OPT TO BAC27TEX4182 WHEN USED WITH ASSOCIATED PARTS	504903	1
24	BAC27TEX4182	..MARKER- SUPPLIER CODE: V89954 QUALIFIED OPTIONAL DATA: BAC27TEX3471 IS OPT TO BAC27TEX4182 WHEN USED WITH ASSOCIATED PARTS	504903	1
25	NAS1801-04-5	..SCREW	504903	12
40	NAS514P440-4P	..SCREW	504903	4
45	NAS514P440-5P	..SCREW	504903	10
50	MS35206-202	..SCREW	504903	4
55	MS35338-40	..WASHER	504903	8
60	AN960-4L	..WASHER	504903	8
80	285T0549-2	..COVER ASSY- SUPPLIER CODE: V89954	504903	2
95	285T0546-3	..PANEL-REAR SUPPLIER CODE: V89954	504903	1

MISSING ITEM NUMBERS NOT APPLICABLE

– ITEM NOT ILLUSTRATED

BOEING PROPRIETARY - Copyright © - Unpublished Work - See title page for details.

FIG ITEM	PART NUMBER	1 2 3 4 5 6 7 NOMENCLATURE	EFFECT FROM TO	UNITS PER ASSY
67				
100	285T0550-15	..PANEL ASSY- SUPPLIER CODE: V89954 POSITION DATA: L SIDE OPTIONAL PART: 285T0550-3 V89954 285T0550-11 V89954	504903	1
100	285T0550-3	..PANEL ASSY- SUPPLIER CODE: V89954 POSITION DATA: L SIDE OPTIONAL PART: 285T0550-11 V89954 285T0550-15 V89954	504903	1
100	285T0550-11	..PANEL ASSY- SUPPLIER CODE: V89954 POSITION DATA: L SIDE OPTIONAL PART: 285T0550-15 V89954 285T0550-3 V89954	504903	1
105	285T0550-16	..PANEL ASSY- SUPPLIER CODE: V89954 POSITION DATA: R SIDE OPTIONAL PART: 285T0550-4 V89954 285T0550-12 V89954	504903	1

MISSING ITEM NUMBERS NOT APPLICABLE

– ITEM NOT ILLUSTRATED

BOEING PROPRIETARY - Copyright © - Unpublished Work - See title page for details.

FIG ITEM	PART NUMBER	1 2 3 4 5 6 7 NOMENCLATURE	EFFECT FROM TO	UNITS PER ASSY
67				
105	285T0550-4	..PANEL ASSY- SUPPLIER CODE: V89954 POSITION DATA: R SIDE OPTIONAL PART: 285T0550-12 V89954 285T0550-16 V89954	504903	1
105	285T0550-12	..PANEL ASSY- SUPPLIER CODE: V89954 POSITION DATA: R SIDE OPTIONAL PART: 285T0550-4 V89954 285T0550-16 V89954	504903	1
110	BACN10XR04	...NUTPLATE- USED ON: 285T0550-15 285T0550-16 ATTACHING PARTS	504903	4
- 111	BACR15BA2AD	...RIVET- SIZE DETERMINED ON INSTL. USED ON: 285T0550-15 285T0550-16 -------*-------	504903	8
113	LAC440-1	...NUT-PRESS SUPPLIER CODE: V46384 USED ON: 285T0550-3 285T0550-4 285T0550-11 285T0550-12	504903	4
115	F22A27M22-40	...NUT-ANCHOR SUPPLIER CODE: V0217B ATTACHING PARTS	504903	2
- 116	BACR15BA2AD	...RIVET- SIZE DETERMINED ON INSTL. -------*-------	504903	4

MISSING ITEM NUMBERS NOT APPLICABLE

- ITEM NOT ILLUSTRATED

BOEING PROPRIETARY - Copyright © - Unpublished Work - See title page for details.

FIG ITEM	PART NUMBER	1 2 3 4 5 6 7 NOMENCLATURE	EFFECT FROM TO	UNITS PER ASSY
67				
120	FE0440EF	...NUT-PRESS SUPPLIER CODE: V46384 USED ON: 285T0550-11 285T0550-12 285T0550-15 285T0550-16	504903	4
120	FE0X440	...NUT-PRESS SUPPLIER CODE: V46384 USED ON: 285T0550-3 285T0550-4	504903	4
123	FE0440EF	...NUT-PRESS SUPPLIER CODE: V46384	504903	2
125	285T0550-19	...PANEL- SUPPLIER CODE: V89954 USED ON: 285T0550-15	504903	1
125	285T0550-7	...PANEL- SUPPLIER CODE: V89954 USED ON: 285T0550-3 285T0550-11	504903	1
130	285T0550-20	...PANEL- SUPPLIER CODE: V89954 USED ON: 285T0550-16	504903	1
130	285T0550-8	...PANEL- SUPPLIER CODE: V89954 USED ON: 285T0550-4 285T0550-12	504903	1
135	285T0561-1	..MODULE ASSY-ELECT. SUPPLIER CODE: V89954	504903	1
138	285T0569-1	...DEVICE ASSY-PROGRAMMED MEMORY SUPPLIER CODE: V89954	504903	2

MISSING ITEM NUMBERS NOT APPLICABLE

— ITEM NOT ILLUSTRATED

BOEING PROPRIETARY - Copyright © - Unpublished Work - See title page for details.

FIG ITEM	PART NUMBER	1 2 3 4 5 6 7 NOMENCLATURE	EFFECT FROM TO	UNITS PER ASSY
67				
142	BAC27TEX2007	....DECAL- OPTIONAL PART: WHB673-1D0X0D5 V85480	504903	1
142	WHB673-1D0X0D5	....DECAL- SUPPLIER CODE: V85480 OPTIONAL PART: BAC27TEX2007	504903	1
145	285T0548-6	..PANEL ASSY-FRONT SUPPLIER CODE: V89954	504903	1
150	BACS21DD1B	...STUD ASSY SUPPLIER CODE: V08524 SPECIFICATION NUMBER: BACS21DD1B	504903	4
155	SF6G6CBB5D	...NUT SUPPLIER CODE: V12324 SPECIFICATION NUMBER: BACN10PA06-6	504903	2
160	U256-1	...NUT-PRESS SUPPLIER CODE: V46384	504903	8
165	285T0548-16	...PANEL- SUPPLIER CODE: V89954	504903	1
170	WCS225-5	..SEAL ASSY- SUPPLIER CODE: V51074 QUALIFIED OPTIONAL DATA: WCS225-5 OPT TO WCS225-9 WHEN USED WITH ASSOCIATED PARTS	504903	2
170	WCS225-9	..SEAL ASSY- SUPPLIER CODE: V51074 QUALIFIED OPTIONAL DATA: WCS225-5 OPT TO WCS225-9 WHEN USED WITH ASSOCIATED PARTS	504903	2
175	285T0580-2	..GASKET ASSY- SUPPLIER CODE: V89954 OPTIONAL PART: 285T0580-1 V89954	504903	2

MISSING ITEM NUMBERS NOT APPLICABLE

– ITEM NOT ILLUSTRATED

BOEING PROPRIETARY - Copyright © - Unpublished Work - See title page for details.

FIG ITEM	PART NUMBER	1 2 3 4 5 6 7 NOMENCLATURE	EFFECT FROM TO	UNITS PER ASSY
67				
175	285T0580-1	..GASKET-	504903	2
		SUPPLIER CODE:		
		V89954		
		OPTIONAL PART:		
		285T0580-2		
		V89954		
180	285T1151-2	..GASKET-	504903	2
		SUPPLIER CODE:		
		V89954		
		QUALIFIED OPTIONAL DATA:		
		285T1151-1 OPT TO		
		285T1151-2 WHEN USED		
		WITH ASSOCIATED PARTS		
180	285T1151-1	..GASKET-	504903	2
		SUPPLIER CODE:		
		V89954		
		QUALIFIED OPTIONAL DATA:		
		285T1151-1 OPT TO		
		285T1151-2 WHEN USED		
		WITH ASSOCIATED PARTS		
185	BACP10U0075T	.PANEL ASSY	504903	1
190	233N6205-12	.PANEL ASSY-ENG FIRE CONT	504903	1
		SUPPLIER CODE:		
		V89954		
		ELECTRICAL EQUIP NUMBER:		
		M10443		
		COMPONENT MAINT MANUAL REF:		
		26-15-41		
		FOR OTHER SYS DETAILS SEE:		
		26-11-54-02A		
		26-21-01-02		
195	NAS514P632-5	..SCREW	504903	3
200	NAS1801-06-5	..SCREW	504903	3
205	233N6205-16	..BRACKET ASSY-	504903	1
		SUPPLIER CODE:		
		V89954		
		ATTACHING PARTS		
- 208	NAS1801-04-4	..SCREW	504903	6
		-------*-------		
210	BACG20ZA0208	...GROMMET	504903	2
215	233N3250-61	..BRACKET-SPRT	504903	1
220	69B46200-29	..STANDOFF	504903	1
225	233N6205-17	..STANDOFF-	504903	2
		SUPPLIER CODE:		
		V89954		
230	233N6205-13	..BASEPLATE ASSY-	504903	1
		SUPPLIER CODE:		
		V89954		

MISSING ITEM NUMBERS NOT APPLICABLE

- ITEM NOT ILLUSTRATED

BOEING PROPRIETARY - Copyright © - Unpublished Work - See title page for details.

FIG ITEM	PART NUMBER	1 2 3 4 5 6 7 NOMENCLATURE	EFFECT FROM TO	UNITS PER ASSY
67				
235	SF6GXBAS8D	...PIN- SUPPLIER CODE: V12324	504903	2
245	233N6203-301	.PANEL ASSY-APU/CARGO FIRE CONT SUPPLIER CODE: V89954 COMPONENT MAINT MANUAL REF: 26-15-51 PRE ALERT SB: 33A0044 FOR OTHER SYS DETAILS SEE: 26-22-03-03 26-23-52-04A 33-13-01-04	504903	1
245	233N6203-355	.PANEL ASSY-APU/CARGO FIRE CONT SUPPLIER CODE: V89954 FOR OTHER SYS DETAILS SEE: 26-22-03-03 26-23-52-04A 33-13-01-04	504903	1
245	233N6203-1301	.PANEL ASSY-APU/CARGO FIRE CONT SUPPLIER CODE: V89954 COMPONENT MAINT MANUAL REF: 26-15-51 POST ALERT SB: 33A0044 FOR OTHER SYS DETAILS SEE: 26-22-03-03 26-23-52-04A 33-13-01-04	504903	1

MISSING ITEM NUMBERS NOT APPLICABLE

– ITEM NOT ILLUSTRATED

BOEING PROPRIETARY - Copyright © - Unpublished Work - See title page for details.

FIG ITEM	PART NUMBER	1 2 3 4 5 6 7 NOMENCLATURE	EFFECT FROM TO	UNITS PER ASSY
67				
- 250	233N6203-161	..PANEL ASSY- SUPPLIER CODE: V89954 ELECTRICAL EQUIP NUMBER: M10444 COMPONENT MAINT MANUAL REF: 26-15-51 QUALIFIED I/W DATA: THE 233N6203-301 PANEL ASSY IS I/W THE 233N6203-161 PANEL ASSY T/W THE S233T100-573 LIGHTPLATE. 233N6203-9/-23/-45/-104/-105/-161 ARE ALL INTERCHANGEABLE EXCEPT SUBJECT TO CUSTOMER PREFERENCE USED ON: 233N6203-301 PRE ALERT SB: 33A0044	504903	RF
- 250	233N6203-252	..PANEL ASSY- SUPPLIER CODE: V89954 ELECTRICAL EQUIP NUMBER: M10444 COMPONENT MAINT MANUAL REF: 26-15-51 USED ON: 233N6203-355	504903	RF
- 250	233N6203-1161	..PANEL ASSY- SUPPLIER CODE: V89954 ELECTRICAL EQUIP NUMBER: M10444 COMPONENT MAINT MANUAL REF: 26-15-51 USED ON: 233N6203-1301 POST ALERT SB: 33A0044	504903	RF
255	NAS514P632-5	...SCREW- USED ON: 233N6203-161	504903	4

MISSING ITEM NUMBERS NOT APPLICABLE

– ITEM NOT ILLUSTRATED

BOEING PROPRIETARY - Copyright © - Unpublished Work - See title page for details.

FIG ITEM	PART NUMBER	1 2 3 4 5 6 7 NOMENCLATURE	EFFECT FROM TO	UNITS PER ASSY
67				
255	FH6C5TPKL12BN	...SCREW-	504903	4
		SUPPLIER CODE:		
		V12324		
		USED ON:		
		233N6203-252		
265	NAS1801-06-5	...SCREW-	504903	4
		USED ON:		
		233N6203-161		
265	NAS1801-06-5	...SCREW-	504903	4
		OPTIONAL PART:		
		BACS12HN06-5		
		USED ON:		
		233N6203-252		
265	BACS12HN06-5	...SCREW-	504903	4
		OPTIONAL PART:		
		NAS1801-06-5		
		USED ON:		
		233N6203-252		
270	MS35338-41	...WASHER-	504903	4
		USED ON:		
		233N6203-161		
270	BACW10EC06S	...WASHER-	504903	4
		USED ON:		
		233N6203-252		
275	69B46200-15	...STANDOFF	504903	4
277	233N6203-6	...BRACKET ASSY-	504903	RF
		SUPPLIER CODE:		
		V89954		
285	233N6203-2	...BASEPLATE ASSY-	504903	1
		SUPPLIER CODE:		
		V89954		
R 290	PFSC35-38ASEMB	....STUD ASSY	504903	4
R		SUPPLIER CODE:		
R		V72794		
R		SPECIFICATION NUMBER:		
R		BACS21DX1B		
295	SF6G6CBB5D	....NUT	504903	3
		SUPPLIER CODE:		
		V12324		
		SPECIFICATION NUMBER:		
		BACN10PA06-6		
300	233N6203-3	....BASEPLATE-	504903	1
		SUPPLIER CODE:		
		V89954		

MISSING ITEM NUMBERS NOT APPLICABLE

– ITEM NOT ILLUSTRATED

BOEING PROPRIETARY - Copyright © - Unpublished Work - See title page for details.

FIG ITEM	PART NUMBER	1 2 3 4 5 6 7 NOMENCLATURE	EFFECT FROM TO	UNITS PER ASSY
67				
308	G6990-24	.PANEL ASSY-DUAL AIR TRAFFIC CONT (CUSTOMER FURNISHED) SUPPLIER CODE: V99837 ELECTRICAL EQUIP NUMBER: M10140 COMPONENT MAINT MANUAL REF: 34-50-20 FOR BREAKDOWN SEE: 34-53-02-02	504903	RF
312	BACP10U0037T	.PANEL ASSY	504903	1
315	285T0553-4	.PANEL ASSY-ILS CONT SYS CONT STATIC SENSITIVE SUPPLIER CODE: V89954 ELECTRICAL EQUIP NUMBER: M00087 COMPONENT MAINT MANUAL REF: 34-31-61 FOR OTHER SYS DETAILS SEE: 11-31-05-65D 33-13-01-04 34-31-02-02	504903	1
315	285T0553-1	.PANEL ASSY-ILS CONT SUPPLIER CODE: V89954 ELECTRICAL EQUIP NUMBER: M00087 COMPONENT MAINT MANUAL REF: 34-31-61 FOR OTHER SYS DETAILS SEE: 33-13-01-04 34-31-02-02 11-31-05-65D	504903	1
315	285T0553-2	.PANEL ASSY-ILS CONT SUPPLIER CODE: V89954 ELECTRICAL EQUIP NUMBER: M00087 COMPONENT MAINT MANUAL REF: 34-31-61 FOR OTHER SYS DETAILS SEE: 33-13-01-04 34-31-02-02 11-31-05-65D	504903	1

MISSING ITEM NUMBERS NOT APPLICABLE

– ITEM NOT ILLUSTRATED

BOEING PROPRIETARY - Copyright © - Unpublished Work - See title page for details.

FIG ITEM	PART NUMBER	1 2 3 4 5 6 7 NOMENCLATURE	EFFECT FROM TO	UNITS PER ASSY
67				
315	285T0553-3	.PANEL ASSY-ILS CONT SUPPLIER CODE: V89954 ELECTRICAL EQUIP NUMBER: M00087 FOR OTHER SYS DETAILS SEE: 11-31-05-65D 33-13-01-04 34-31-02-02	504903	1
317	BAC27TEX3465	..MARKER-ALUMINUM FOIL SUPPLIER CODE: V89954 QUALIFIED OPTIONAL DATA: BAC27TEX3465 OR BAC27TEX4173 OR BAC27TEX4812 ARE ALL OPT WHEN USED WITH ASSOCIATED ITEMS USED ON: 285T0553-4	504903	1
317	BAC27TEX3465	..MARKER-ALUMINUM FOIL SUPPLIER CODE: V89954 USED ON: 285T0553-1 285T0553-2 285T0553-3	504903	1
318	BAC27TEX4173	..MARKER-ALUMINUM FOIL SUPPLIER CODE: V89954 QUALIFIED OPTIONAL DATA: BAC27TEX3465 OR BAC27TEX4173 OR BAC27TEX4812 ARE ALL OPT WHEN USED WITH ASSOCIATED ITEMS USED ON: 285T0553-4	504903	1
319	BAC27TEX4812	..MARKER-ALUMINUM FOIL SUPPLIER CODE: V89954 QUALIFIED OPTIONAL DATA: BAC27TEX3465 OR BAC27TEX4173 OR BAC27TEX4812 ARE ALL OPT WHEN USED WITH ASSOCIATED ITEMS USED ON: 285T0553-4	504903	1

MISSING ITEM NUMBERS NOT APPLICABLE

– ITEM NOT ILLUSTRATED

BOEING PROPRIETARY - Copyright © - Unpublished Work - See title page for details.

FIG ITEM	PART NUMBER	1 2 3 4 5 6 7 NOMENCLATURE	EFFECT FROM TO	UNITS PER ASSY
67				
320	NAS1801-04-5	..SCREW	504903	12
335	NAS514P440-4P	..SCREW	504903	4
340	NAS514P440-5P	..SCREW	504903	12
345	MS35206-202	..SCREW	504903	4
350	MS35338-40	..WASHER	504903	8
355	AN960-4L	..WASHER	504903	8
375	285T0549-1	..COVER ASSY-	504903	2
		SUPPLIER CODE:		
		V89954		
395	285T0546-1	..PANEL-REAR	504903	1
		SUPPLIER CODE:		
		V89954		
400	285T0550-13	..PANEL ASSY-	504903	1
		SUPPLIER CODE:		
		V89954		
		POSITION DATA:		
		L SIDE		
		OPTIONAL PART:		
		285T0550-1		
		V89954		
		285T0550-9		
		V89954		
400	285T0550-1	..PANEL ASSY-	504903	1
		SUPPLIER CODE:		
		V89954		
		POSITION DATA:		
		L SIDE		
		OPTIONAL PART:		
		285T0550-9		
		V89954		
		285T0550-13		
		V89954		
400	285T0550-9	..PANEL ASSY-	504903	1
		SUPPLIER CODE:		
		V89954		
		POSITION DATA:		
		L SIDE		
		OPTIONAL PART:		
		285T0550-13		
		V89954		
		285T0550-1		
		V89954		

MISSING ITEM NUMBERS NOT APPLICABLE

– ITEM NOT ILLUSTRATED

BOEING PROPRIETARY - Copyright © - Unpublished Work - See title page for details.

FIG ITEM	PART NUMBER	1 2 3 4 5 6 7 NOMENCLATURE	EFFECT FROM TO	UNITS PER ASSY
67				
405	285T0550-14	..PANEL ASSY- SUPPLIER CODE: V89954 POSITION DATA: R SIDE OPTIONAL PART: 285T0550-2 V89954 285T0550-10 V89954	504903	1
405	285T0550-2	..PANEL ASSY- SUPPLIER CODE: V89954 POSITION DATA: R SIDE OPTIONAL PART: 285T0550-10 V89954 285T0550-14 V89954	504903	1
405	285T0550-10	..PANEL ASSY- SUPPLIER CODE: V89954 POSITION DATA: R SIDE OPTIONAL PART: 285T0550-14 V89954 285T0550-2 V89954	504903	1
410	BACN10XR04	...NUTPLATE- USED ON: 285T0550-13 285T0550-14 ATTACHING PARTS	504903	4
- 412	BACR15BA2AD	...RIVET- SIZE DETERMINED ON INSTL. -------*-------	504903	8
413	LAC440-1	...NUT-PRESS SUPPLIER CODE: V46384 USED ON: 285T0550-1 285T0550-2 285T0550-9 285T0550-10	504903	4
415	F22A27M22-40	...NUT- SUPPLIER CODE: V0217B	504903	2

MISSING ITEM NUMBERS NOT APPLICABLE

- ITEM NOT ILLUSTRATED

BOEING PROPRIETARY - Copyright © - Unpublished Work - See title page for details.

FIG ITEM	PART NUMBER	1 2 3 4 5 6 7 NOMENCLATURE	EFFECT FROM TO	UNITS PER ASSY
67				
		ATTACHING PARTS		
- 416	BACR15BA2AD	...RIVET-	504903	4
		SIZE DETERMINED ON INSTL.		
		-------*-------		
417	FE0X440	...NUT-PRESS	504903	4
		SUPPLIER CODE:		
		V46384		
		USED ON:		
		285T0550-1		
		285T0550-2		
417	FE0440EF	...NUT-PRESS	504903	4
		SUPPLIER CODE:		
		V46384		
		USED ON:		
		285T0550-9		
		285T0550-10		
		285T0550-13		
		285T0550-14		
423	FE0440EF	...NUT-PRESS	504903	2
		SUPPLIER CODE:		
		V46384		
425	285T0550-17	...PANEL-	504903	1
		SUPPLIER CODE:		
		V89954		
		USED ON:		
		285T0550-13		
425	285T0550-5	...PANEL-	504903	1
		SUPPLIER CODE:		
		V89954		
		USED ON:		
		285T0550-1		
		285T0550-9		
430	285T0550-18	...PANEL-	504903	1
		SUPPLIER CODE:		
		V89954		
		USED ON:		
		285T0550-14		
430	285T0550-6	...PANEL-	504903	1
		SUPPLIER CODE:		
		V89954		
		USED ON:		
		285T0550-2		
		285T0550-10		

MISSING ITEM NUMBERS NOT APPLICABLE

- ITEM NOT ILLUSTRATED

BOEING PROPRIETARY - Copyright © - Unpublished Work - See title page for details.

FIG ITEM	PART NUMBER	1 2 3 4 5 6 7 NOMENCLATURE	EFFECT FROM TO	UNITS PER ASSY
67				
435	285T0558-3	..MODULE ASSY-ELECT SUPPLIER CODE: V89954 QUALIFIED OPTIONAL DATA: 285T0558-3 OPT TO 285T0558-10 WHEN USED WITH ASSOCIATED ITEMS USED ON: 285T0553-4	504903	1
435	285T0558-10	..MODULE ASSY-ELECT SUPPLIER CODE: V89954 QUALIFIED OPTIONAL DATA: 285T0558-3 OPT TO 285T0558-10 WHEN USED WITH ASSOCIATED ITEMS USED ON: 285T0553-4	504903	1
435	285T0558-1	..MODULE ASSY-ELECT. SUPPLIER CODE: V89954 USED ON: 285T0553-4	504903	1
435	285T0558-2	..MODULE ASSY-ELECT. SUPPLIER CODE: V89954 USED ON: 285T0553-4	504903	1
435	285T0558-1	..MODULE ASSY-ELECT. SUPPLIER CODE: V89954 USED ON: 285T0553-1 285T0553-3	504903	1
435	285T0558-2	..MODULE ASSY-ELECT. SUPPLIER CODE: V89954 QUALIFIED OPTIONAL DATA: 285T0558-2 OPT TO 285T0558-9 WHEN USED WITH ASSOCIATED ITEMS USED ON: 285T0553-2	504903	1

MISSING ITEM NUMBERS NOT APPLICABLE

– ITEM NOT ILLUSTRATED

BOEING PROPRIETARY - Copyright © - Unpublished Work - See title page for details.

FIG ITEM	PART NUMBER	1 2 3 4 5 6 7 NOMENCLATURE	EFFECT FROM TO	UNITS PER ASSY
67				
435	285T0558-9	..MODULE ASSY-ELECT. SUPPLIER CODE: V89954 QUALIFIED OPTIONAL DATA: 285T0558-2 OPT TO 285T0558-9 WHEN USED WITH ASSOCIATED ITEMS USED ON: 285T0553-2	504903	1
435	285T0558-1	..MODULE ASSY-ELECT. SUPPLIER CODE: V89954 USED ON: 285T0553-2	504903	1
439	285T0566-1	...PMD ASSY- SUPPLIER CODE: V89954	504903	3
441	BAC27TEX2007	....DECAL- OPTIONAL PART: WHB673-1-0X0-5 V85480 DAT59-652 V85480	504903	1
441	WHB673-1-0X0-5	....DECAL- SUPPLIER CODE: V85480 OPTIONAL PART: BAC27TEX2007 DAT59-652 V85480	504903	1
441	DAT59-652	....DECAL- SUPPLIER CODE: V85480 OPTIONAL PART: BAC27TEX2007 WHB673-1-0X0-5 V85480	504903	1
445	285T0548-1	..PANEL ASSY-FRONT SUPPLIER CODE: V89954	504903	1
450	BACS21DD1B	...STUD ASSY SUPPLIER CODE: V08524 SPECIFICATION NUMBER: BACS21DD1B	504903	4

MISSING ITEM NUMBERS NOT APPLICABLE

– ITEM NOT ILLUSTRATED

BOEING PROPRIETARY - Copyright © - Unpublished Work - See title page for details.

FIG ITEM	PART NUMBER	1 2 3 4 5 6 7 NOMENCLATURE	EFFECT FROM TO	UNITS PER ASSY
67				
455	SF6G6CBB5D	...NUT SUPPLIER CODE: V12324 SPECIFICATION NUMBER: BACN10PA06-6	504903	2
460	U256-1	...NUT-PRESS SUPPLIER CODE: V46384	504903	8
465	285T0548-11	...PANEL- SUPPLIER CODE: V89954	504903	1
470	WCS225-7	..SEAL ASSY- SUPPLIER CODE: V51074	504903	2
472	285T0580-1	..GASKET-LCD MODULE SUPPLIER CODE: V89954 QUALIFIED OPTIONAL DATA: 285T0580-1 OPT TO 285T0580-2 WHEN USED WITH ASSOCIATED ITEMS USED ON: 285T0553-4	504903	2
472	285T0580-1	..GASKET-LCD MODULE SUPPLIER CODE: V89954 USED ON: 285T0553-1 285T0553-2 285T0553-3	504903	2
472	285T0580-2	..GASKET ASSY-LCD MODULE SUPPLIER CODE: V89954 QUALIFIED OPTIONAL DATA: 285T0580-1 OPT TO 285T0580-2 WHEN USED WITH ASSOCIATED ITEMS USED ON: 285T0553-4	504903	2
475	285T1151-1	..GASKET- SUPPLIER CODE: V89954 QUALIFIED OPTIONAL DATA: 285T1151-1 OPT TO 285T1151-2 WHEN USED WITH ASSOCIATED ITEMS USED ON: 285T0553-4	504903	2

MISSING ITEM NUMBERS NOT APPLICABLE

– ITEM NOT ILLUSTRATED

BOEING PROPRIETARY - Copyright © - Unpublished Work - See title page for details.

FIG ITEM	PART NUMBER	1 2 3 4 5 6 7 NOMENCLATURE	EFFECT FROM TO	UNITS PER ASSY
67				
475	285T1151-2	..GASKET- SUPPLIER CODE: V89954 QUALIFIED OPTIONAL DATA: 285T1151-1 OPT TO 285T1151-2 WHEN USED WITH ASSOCIATED ITEMS USED ON: 285T0553-4	504903	2
480	362-021-002	.INDICATOR ASSY-RUD TRIM SUPPLIER CODE: V26055 FUNCTIONAL DESCRIPTION: DISPLAYS RUDDER TRIM POSITION AS NOSE LEFT AND RIGHT UNITS SPECIFICATION NUMBER: S231T282-2 ELECTRICAL EQUIP NUMBER: N00083 COMPONENT MAINT MANUAL REF: 27-20-01 FOR BREAKDOWN SEE: 27-28-02-01A	504903	RF
R 485	233T6201-324	.PANEL ASSY-AIL. RUD TRIM CONT SUPPLIER CODE: V89954 FUNCTIONAL DESCRIPTION: CONTROLS AILERON RUDDER TRIM AND DISPLAYS TRIM ANGLE. COMPONENT MAINT MANUAL REF: 27-21-63 QUALIFIED I/W DATA: THE 233T6201-324 PANEL ASSY IS I/W THE 233T6201-21 PANEL ASSY T/W THE S233T100-528 LIGHTPLATE AND SA808-101 KNOB FOR OTHER SYS DETAILS SEE: 27-11-23-03 27-21-23-03 33-13-01-04	504903	1

MISSING ITEM NUMBERS NOT APPLICABLE

– ITEM NOT ILLUSTRATED

BOEING PROPRIETARY - Copyright © - Unpublished Work - See title page for details.

FIG ITEM	PART NUMBER	1 2 3 4 5 6 7 NOMENCLATURE	EFFECT FROM TO	UNITS PER ASSY
67				
- 490	233T6201-21	..PANEL ASSY- SUPPLIER CODE: V89954 ELECTRICAL EQUIP NUMBER: M00074 COMPONENT MAINT MANUAL REF: 27-21-63 QUALIFIED I/W DATA: THE 233T6201-324 PANEL ASSY IS I/W THE 233T6201-21 PANEL ASSY T/W THE S233T100-528 LIGHTPLATE AND SA808-101 KNOB	504903	RF
495	NAS514P632-5	...SCREW	504903	7
500	NAS1801-06-5	...SCREW	504903	3
505	MS35338-41	...WASHER	504903	3
510	233T6200-38	...BRACKET-SPRT	504903	1
515	69B46200-7	...STANDOFF	504903	3
520	233T6201-20	...SHROUD ASSY- SUPPLIER CODE: V89954	504903	1
522	MF6001-06	....NUTPLATE SUPPLIER CODE: V15653 SPECIFICATION NUMBER: BACN10KJ06CM ATTACHING PARTS	504903	4
- 524	BACR15BA3AD	....RIVET- SIZE DETERMINED ON INSTL. -------*-------	504903	8
525	233T6201-15	...BASEPLATE ASSY- SUPPLIER CODE: V89954	504903	1
530	BACS21DD1B	....STUD ASSY SUPPLIER CODE: V08524 SPECIFICATION NUMBER: BACS21DD1B	504903	4
535	SF6G6CBB5D	....NUT SUPPLIER CODE: V12324 SPECIFICATION NUMBER: BACN10PA06-6	504903	3
540	233T6201-16	....BASEPLATE- SUPPLIER CODE: V89954	504903	1

MISSING ITEM NUMBERS NOT APPLICABLE

- ITEM NOT ILLUSTRATED

BOEING PROPRIETARY - Copyright © - Unpublished Work - See title page for details.

FIG ITEM	PART NUMBER	1 2 3 4 5 6 7 NOMENCLATURE	EFFECT FROM TO	UNITS PER ASSY
67				
545	233N6206-302	.PANEL ASSY-AIRCRAFT COMMUNICATIONS ADDRESSING AND REPORTING SYSTEM SUPPLIER CODE: V89954 ELECTRICAL EQUIP NUMBER: M10775 FOR OTHER SYS DETAILS SEE: 23-22-05-02 33-13-01-04	504903	1
- 550	233N6206-6	..PANEL ASSY- SUPPLIER CODE: V89954 COMPONENT MAINT MANUAL REF: 23-27-02	504903	RF
555	FH6C6CPL12BN	...SCREW- SUPPLIER CODE: V12324	504903	3
560	MS51957-27	...SCREW	504903	3
R 565	BACW10EC06S	...WASHER	504903	3
570	69-43873-75	...BRACKET-SPRT	504903	1
575	69B46200-5	...STANDOFF-SPRT	504903	3
580	233N6206-7	...BASEPLATE ASSY- SUPPLIER CODE: V89954	504903	1
585	SF6G6CBB5D	....NUT SUPPLIER CODE: V12324 SPECIFICATION NUMBER: BACN10PA06-6	504903	2
595	233N6204-301	.PANEL ASSY-FIRE/OVERHEAT TEST SUPPLIER CODE: V89954 COMPONENT MAINT MANUAL REF: 26-11-52 QUALIFIED I/W DATA: THE 233N6204-301 PANEL ASSY IS I/W THE 233N6204-15 PANEL ASSY T/W THE S233T100-5508 LIGHTPLATE. FOR OTHER SYS DETAILS SEE: 26-11-02-01 26-12-51-03 26-17-51-06 33-13-01-04	504903	1

MISSING ITEM NUMBERS NOT APPLICABLE

- ITEM NOT ILLUSTRATED

BOEING PROPRIETARY - Copyright © - Unpublished Work - See title page for details.

FIG ITEM	PART NUMBER	1 2 3 4 5 6 7 NOMENCLATURE	EFFECT FROM TO	UNITS PER ASSY
67				
598	233T6204-301	.PANEL ASSY-FIRE/OVERHEAT TEST SUPPLIER CODE: V89954 COMPONENT MAINT MANUAL REF: 26-11-51 QUALIFIED I/W DATA: 233T6204-301 PANEL ASSY IS I/W 233T6204-13 PANEL ASSY T/W S233T100-538 LIGHTPLATE FOR OTHER SYS DETAILS SEE: 26-11-02-01 26-17-51-06 33-13-01-04	504903	1
- 600	233N6204-15	..PANEL ASSY- SUPPLIER CODE: V89954 ELECTRICAL EQUIP NUMBER: M10445 COMPONENT MAINT MANUAL REF: 26-11-52 QUALIFIED I/W DATA: THE 233N6204-301 PANEL ASSY IS I/W THE 233N6204-15 PANEL ASSY T/W THE S233T100-5508 LIGHTPLATE. USED ON: 233N6204-301	504903	RF
- 603	233T6204-13	..PANEL ASSY- SUPPLIER CODE: V89954 ELECTRICAL EQUIP NUMBER: M10445 COMPONENT MAINT MANUAL REF: 26-11-51 QUALIFIED I/W DATA: 233T6204-301 PANEL ASSY IS I/W 233T6204-13 PANEL ASSY T/W S233T100-538 LIGHTPLATE USED ON: 233T6204-301	504903	1

MISSING ITEM NUMBERS NOT APPLICABLE

- ITEM NOT ILLUSTRATED

BOEING PROPRIETARY - Copyright © - Unpublished Work - See title page for details.

	FIG ITEM	PART NUMBER	1 2 3 4 5 6 7 NOMENCLATURE	EFFECT FROM TO	UNITS PER ASSY
	67				
R	- 603	233T6204-16	..PANEL ASSY-	504903	1
R			SUPPLIER CODE:		
R			V89954		
R			ELECTRICAL EQUIP NUMBER:		
R			M10445		
R			COMPONENT MAINT MANUAL REF:		
R			26-11-51		
R			USED ON:		
R			233T6204-301		
	605	NAS514P632-5	...SCREW-	504903	3
			USED ON:		
			233N6204-15		
	607	NAS514P632-5	...SCREW-	504903	3
			USED ON:		
			233T6204-13		
	610	NAS1801-06-5	...SCREW-	504903	3
			OPTIONAL PART:		
			BACS12HN06-5		
			USED ON:		
			233N6204-15		
	610	BACS12HN06-5	...SCREW-	504903	3
			OPTIONAL PART:		
			NAS1801-06-5		
			USED ON:		
			233N6204-15		
	613	BACS12CK06U5	...SCREW-	504903	3
			USED ON:		
			233T6204-13		
	615	MS35338-41	...WASHER-	504903	3
			OPTIONAL PART:		
			BACW10EC06S		
			USED ON:		
			233N6204-15		
	615	BACW10EC06S	...WASHER-	504903	3
			OPTIONAL PART:		
			MS35338-41		
			USED ON:		
			233N6204-15		
	617	BACW10EC06CD	...WASHER-	504903	3
			USED ON:		
			233T6204-13		
	620	69B46200-14	...STANDOFF-	504903	3
			USED ON:		
			233N6204-15		
	623	69B46200-11	...STANDOFF-	504903	3
			USED ON:		
			233T6204-13		

MISSING ITEM NUMBERS NOT APPLICABLE

– ITEM NOT ILLUSTRATED

BOEING PROPRIETARY - Copyright © - Unpublished Work - See title page for details.

FIG ITEM	PART NUMBER	1 2 3 4 5 6 7 NOMENCLATURE	EFFECT FROM TO	UNITS PER ASSY
67				
625	233N3250-40	...BRACKET-SPRT USED ON: 233N6204-15	504903	1
627	233T6200-64	...BRACKET-SPRT USED ON: 233T6204-13	504903	1
630	233N6204-11	...BASEPLATE ASSY- SUPPLIER CODE: V89954 USED ON: 233N6204-15	504903	1
633	233T6204-10	...BASEPLATE ASSY- SUPPLIER CODE: V89954 USED ON: 233T6204-13	504903	1
635	PFSC35-38ASEMB	....STUD ASSY- SUPPLIER CODE: V72794 SPECIFICATION NUMBER: BACS21DX1B USED ON: 233N6204-11	504903	4
637	BACS21DD1B	....STUD ASSY- SUPPLIER CODE: V08524 SPECIFICATION NUMBER: BACS21DD1B USED ON: 233T6204-10	504903	4
640	SF6G6CBB5D	....NUT- SUPPLIER CODE: V12324 SPECIFICATION NUMBER: BACN10PA06-6 USED ON: 233N6204-11	504903	2
643	SF6G6CBB5D	....NUT- SUPPLIER CODE: V12324 SPECIFICATION NUMBER: BACN10PA06-6 USED ON: 233T6204-10	504903	2
645	233N6204-12	....BASEPLATE- SUPPLIER CODE: V89954 USED ON: 233N6204-11	504903	1

MISSING ITEM NUMBERS NOT APPLICABLE

– ITEM NOT ILLUSTRATED

BOEING PROPRIETARY - Copyright © - Unpublished Work - See title page for details.

FIG ITEM	PART NUMBER	1 2 3 4 5 6 7 NOMENCLATURE	EFFECT FROM TO	UNITS PER ASSY
67				
647	BACP10U0187	....BASEPLATE-	504903	1
		USED ON:		
		233T6204-10		
650	285T0020-8	.PANEL ASSY-ILS CONT	504903	1
		SUPPLIER CODE:		
		V89954		
		ELECTRICAL EQUIP NUMBER:		
		M00087		
		COMPONENT MAINT MANUAL REF:		
		34-31-51		
		FOR OTHER SYS DETAILS SEE:		
		33-13-01-04		
		34-31-02-02		
		11-31-05-65D		
652	BAC27TEX0934	..MARKER-ALUMINUM FOIL	504903	1
		SUPPLIER CODE:		
		V89954		
654	NAS514P440-4P	..SCREW	504903	10
656	NAS514P440-5P	..SCREW	504903	6
658	S233-2	..SEAL-	504903	1
		SUPPLIER CODE:		
		V51896		
		OPTIONAL PART:		
		S233-9		
		V51896		
658	S233-9	..SEAL-	504903	1
		SUPPLIER CODE:		
		V51896		
		OPTIONAL PART:		
		S233-2		
		V51896		
660	285T0082-10	..MODULE ASSY-FRONT	504903	1
		SUPPLIER CODE:		
		V89954		
		OPTIONAL PART:		
		285T0082-14		
		V89954		
660	285T0082-14	..MODULE ASSY-FRONT	504903	1
		SUPPLIER CODE:		
		V89954		
		OPTIONAL PART:		
		285T0082-10		
		V89954		
662	MS35206-202	...SCREW	504903	4

MISSING ITEM NUMBERS NOT APPLICABLE

– ITEM NOT ILLUSTRATED

BOEING PROPRIETARY - Copyright © - Unpublished Work - See title page for details.

FIG ITEM	PART NUMBER	1 2 3 4 5 6 7 NOMENCLATURE	EFFECT FROM TO	UNITS PER ASSY
67				
664	WCS225-3	...SEAL ASSY- SUPPLIER CODE: V51074 OPTIONAL PART: WCS225-7 V51074	504903	2
664	WCS225-7	...SEAL ASSY- SUPPLIER CODE: V51074 OPTIONAL PART: WCS225-3 V51074	504903	2
666	285T0440-1	...PANEL ASSY- SUPPLIER CODE: V89954 USED ON: 285T0082-10	504903	1
666	285T0440-22	...PANEL ASSY- SUPPLIER CODE: V89954 USED ON: 285T0082-14	504903	1
668	NAS514P440-5P	....SCREW	504903	2
670	BACS21DD1B	....STUD ASSY SUPPLIER CODE: V08524 SPECIFICATION NUMBER: BACS21DD1B	504903	4
672	92-1660-40	....NUT SUPPLIER CODE: V72962 SPECIFICATION NUMBER: BACN10DN40 OPTIONAL PART: 92-1660-440 V15653	504903	2
674	SF6G6CBB5D	....NUT SUPPLIER CODE: V12324 SPECIFICATION NUMBER: BACN10PA06-6	504903	4
676	285T0440-5	....PANEL- SUPPLIER CODE: V89954 USED ON: 285T0440-1	504903	1

MISSING ITEM NUMBERS NOT APPLICABLE

— ITEM NOT ILLUSTRATED

BOEING PROPRIETARY - Copyright © - Unpublished Work - See title page for details.

FIG ITEM	PART NUMBER	1 2 3 4 5 6 7 NOMENCLATURE	EFFECT FROM TO	UNITS PER ASSY
67				
676	285T0440-23	....PANEL-	504903	1
		SUPPLIER CODE:		
		V89954		
		USED ON:		
		285T0440-22		
678	285T0438-1	....CHASSIS ASSY-UPR	504903	1
		SUPPLIER CODE:		
		V89954		
680	F22A27M22-40	.....NUT-ANCHOR	504903	2
		SUPPLIER CODE:		
		V0217B		
		ATTACHING PARTS		
- 682	BACR15BA2AD	.....RIVET-	504903	4
		SIZE DETERMINED ON INSTL.		
		-------*-------		
684	285T0439-3	..PANEL-SIDE	504903	1
		SUPPLIER CODE:		
		V89954		
686	285T0439-4	..PANEL-SIDE	504903	1
		SUPPLIER CODE:		
		V89954		
688	285T0081-10	..MODULE ASSY-REAR	504903	1
		SUPPLIER CODE:		
		V89954		
690	285T0250-4	...PMD ASSY-	504903	3
		SUPPLIER CODE:		
		V89954		
692	BAC27TEX2007	....DECAL-	504903	1
		OPTIONAL PART:		
		WHB673-1D0X0D5		
		V85480		
692	WHB673-1D0X0D5	....DECAL-	504903	1
		SUPPLIER CODE:		
		V85480		
		OPTIONAL PART:		
		BAC27TEX2007		
694	NAS514P440-4P	...SCREW	504903	1
696	NAS514P440-7P	...SCREW	504903	1
698	NAS43DD0-8	...SPACER	504903	1
700	8214B0440HL	...SPACER-THREADED	504903	1
		SUPPLIER CODE:		
		V06540		
702	NAS620-4L	...WASHER	504903	1
704	285T0439-1	...CHASSIS ASSY-	504903	1
		SUPPLIER CODE:		
		V89954		
706	NAS1801-04-5	....SCREW	504903	1
708	AN960D4L	....WASHER	504903	3

MISSING ITEM NUMBERS NOT APPLICABLE

- ITEM NOT ILLUSTRATED

BOEING PROPRIETARY - Copyright © - Unpublished Work - See title page for details.

FIG ITEM	PART NUMBER	1 2 3 4 5 6 7 NOMENCLATURE	EFFECT FROM TO	UNITS PER ASSY
67				
710	F22A27M22-40	....NUT-ANCHOR SUPPLIER CODE: V0217B ATTACHING PARTS	504903	4
- 712	BACR15BB2AD	....RIVET- SIZE DETERMINED ON INSTL. -------*-------	504903	8
714	285T0439-6	....BRACKET ASSY- SUPPLIER CODE: V89954	504903	1
716	285T0439-2	....SUPPORT ASSY- SUPPLIER CODE: V89954 ATTACHING PARTS	504903	1
- 718	BACR15BA3AD	....RIVET- SIZE DETERMINED ON INSTL. -------*-------	504903	5
720	RMF9201M40	.....NUTPLATE SUPPLIER CODE: V72962 SPECIFICATION NUMBER: BACN10JN04 OPTIONAL PART: BRFM20A04L V52828 MF1000-04BAC V15653 NS103218-40 V80539 MF53049-04 V15653 T8124S04S V11815 VN252A40L V92215	504903	3

MISSING ITEM NUMBERS NOT APPLICABLE

- ITEM NOT ILLUSTRATED

BOEING PROPRIETARY - Copyright © - Unpublished Work - See title page for details.

FIG ITEM	PART NUMBER	1 2 3 4 5 6 7 NOMENCLATURE	EFFECT FROM TO	UNITS PER ASSY
67				
722	T8077S440	.....NUTPLATE SUPPLIER CODE: V11815 SPECIFICATION NUMBER: BACN10JP04B OPTIONAL PART: MK2000-04BAC V15653 NS103198-40 V80539 RMA9207M40 V72962 VN201A1-40L V92215 BRM100A04L V52828 ATTACHING PARTS	504903	1
- 724	BACR15BA3AD	.....RIVET- SIZE DETERMINED ON INSTL. -------*-------	504903	8
726	285T0439-17	.....SUPPORT- SUPPLIER CODE: V89954	504903	1
728	285T0439-5	....CHASSIS- SUPPLIER CODE: V89954	504903	1
730	285T0524-6	.PANEL ASSY-ILS CONT SUPPLIER CODE: V89954 ELECTRICAL EQUIP NUMBER: M00087 COMPONENT MAINT MANUAL REF: 34-31-52 FOR OTHER SYS DETAILS SEE: 11-31-05-65D 33-13-01-04 34-31-02-02	504903	1
732	BAC27TEX2825	..MARKER-ALUMINUM FOIL SUPPLIER CODE: V89954	504903	1
734	MS35206-202	..SCREW	504903	4
736	NAS514P440-6P	..SCREW	504903	4
738	NAS1801-04-5	..SCREW	504903	2
740	AN960-4L	..WASHER	504903	2

MISSING ITEM NUMBERS NOT APPLICABLE

- ITEM NOT ILLUSTRATED

BOEING PROPRIETARY - Copyright © - Unpublished Work - See title page for details.

FIG ITEM	PART NUMBER	1 2 3 4 5 6 7 NOMENCLATURE	EFFECT FROM TO	UNITS PER ASSY
67				
742	92-1660-40	..NUT SUPPLIER CODE: V72962 SPECIFICATION NUMBER: BACN10DN40 OPTIONAL PART: 92-1660-440 V15653	504903	2
744	S233-13	..SEAL- SUPPLIER CODE: V51896 OPTIONAL PART: S233-6 V51896	504903	1
744	S233-6	..SEAL- SUPPLIER CODE: V51896 OPTIONAL PART: S233-13 V51896	504903	1
746	WCS225-7	..SEAL ASSY-SHAFT SUPPLIER CODE: V51074	504903	2
748	285T0525-3	..MODULE ASSY-ELECT. SUPPLIER CODE: V89954	504903	1
- 750	285T0525-4	...MODULE ASSY- SUPPLIER CODE: V89954	504903	1
752	285T0250-4	....PMD ASSY- SUPPLIER CODE: V89954	504903	3
754	BAC27TEX2007	.....DECAL- OPTIONAL PART: WHB673-1D0X0D5 V85480	504903	1
754	WHB673-1D0X0D5	.....DECAL- SUPPLIER CODE: V85480 OPTIONAL PART: BAC27TEX2007	504903	1
756	285T0530-1	..ENCLOSURE ASSY- SUPPLIER CODE: V89954 OPTIONAL PART: 285T0530-2 V89954	504903	1

MISSING ITEM NUMBERS NOT APPLICABLE

- ITEM NOT ILLUSTRATED

BOEING PROPRIETARY - Copyright © - Unpublished Work - See title page for details.

FIG ITEM	PART NUMBER	1 2 3 4 5 6 7 NOMENCLATURE	EFFECT FROM TO	UNITS PER ASSY
67				
756	285T0530-2	..ENCLOSURE ASSY-	504903	1
		SUPPLIER CODE:		
		V89954		
		OPTIONAL PART:		
		285T0530-1		
		V89954		
758	NAS1801-04-5	...SCREW	504903	4
760	NAS514P440-4P	...SCREW	504903	4
762	NAS514P440-5P	...SCREW	504903	12
764	AN960D4	...WASHER	504903	4
766	285T0529-1	...COVER ASSY-SHELL	504903	2
		SUPPLIER CODE:		
		V89954		
768	285T0528-1	...PANEL ASSY-FRONT	504903	1
		SUPPLIER CODE:		
		V89954		
		USED ON:		
		285T0530-1		
768	285T0528-3	...PANEL ASSY-FRONT	504903	1
		SUPPLIER CODE:		
		V89954		
		USED ON:		
		285T0530-2		
770	BACS21DD1B	....STUD ASSY	504903	4
		SUPPLIER CODE:		
		V08524		
		SPECIFICATION NUMBER:		
		BACS21DD1B		
772	SF6G6CBB5D	....NUT	504903	4
		SUPPLIER CODE:		
		V12324		
		SPECIFICATION NUMBER:		
		BACN10PA06-6		
774	285T0528-2	....PANEL-	504903	1
		SUPPLIER CODE:		
		V89954		
		USED ON:		
		285T0528-1		
774	285T0528-4	....PANEL-	504903	1
		SUPPLIER CODE:		
		V89954		
		USED ON:		
		285T0528-3		
776	285T0529-3	...PANEL ASSY-SIDE	504903	1
		SUPPLIER CODE:		
		V89954		
778	285T0529-4	...PANEL ASSY-SIDE	504903	1
		SUPPLIER CODE:		
		V89954		

MISSING ITEM NUMBERS NOT APPLICABLE

– ITEM NOT ILLUSTRATED

BOEING PROPRIETARY - Copyright © - Unpublished Work - See title page for details.

FIG ITEM	PART NUMBER	1 2 3 4 5 6 7 NOMENCLATURE	EFFECT FROM TO	UNITS PER ASSY
67				
780	RMF9201M40	....NUTPLATE SUPPLIER CODE: V72962 SPECIFICATION NUMBER: BACN10JN04 OPTIONAL PART: BRFM20A04L V52828 MF1000-04BAC V15653 NS103218-40 V80539 MF53049-04 V15653 T8124S04S V11815 VN252A40L V92215 ATTACHING PARTS	504903	4
- 782	BACR15BA3AD	....RIVET- SIZE DETERMINED ON INSTL. -------*-------	504903	8
784	F22A27M22-40	....NUT-ANCHOR SUPPLIER CODE: V0217B ATTACHING PARTS	504903	4
- 786	BACR15BA2AD	....RIVET- SIZE DETERMINED ON INSTL. -------*-------	504903	8
788	285T0529-5	....PANEL- SUPPLIER CODE: V89954 USED ON: 285T0529-3	504903	1
790	285T0529-6	....PANEL- SUPPLIER CODE: V89954 USED ON: 285T0529-4	504903	1
792	285T0527-1	...PANEL-REAR SUPPLIER CODE: V89954	504903	1

MISSING ITEM NUMBERS NOT APPLICABLE

- ITEM NOT ILLUSTRATED

BOEING PROPRIETARY - Copyright © - Unpublished Work - See title page for details.

FIG ITEM	PART NUMBER	1 2 3 4 5 6 7 NOMENCLATURE	EFFECT FROM TO	UNITS PER ASSY
67				
800	285T0537-1	.PANEL ASSY-DUAL ADF CONT SUPPLIER CODE: V89954 ELECTRICAL EQUIP NUMBER: M01046 COMPONENT MAINT MANUAL REF: 34-57-53 FOR OTHER SYS DETAILS SEE: 33-13-01-04 34-57-02-03 11-31-05-65D	504903	1
802	BAC27TEX3153	..MARKER- SUPPLIER CODE: V89954	504903	1
803	NAS514P440-6P	..SCREW	504903	4
804	NAS1801-04-6	..SCREW	504903	3
806	MS35206-202	..SCREW	504903	4
808	AN960-4L	..WASHER	504903	3
809	WCS225-5	..SEAL ASSY-SHAFT SUPPLIER CODE: V51074	504903	2
812	S233-14	..SEAL- SUPPLIER CODE: V51896 OPTIONAL PART: S233-7 V51896	504903	1
812	S233-7	..SEAL- SUPPLIER CODE: V51896 OPTIONAL PART: S233-14 V51896	504903	1
815	285T0450-4	..ENCLOSURE ASSY- SUPPLIER CODE: V89954 OPTIONAL PART: 285T0450-2 V89954	504903	1
815	285T0450-2	..ENCLOSURE ASSY- SUPPLIER CODE: V89954 OPTIONAL PART: 285T0450-4 V89954	504903	1
818	NAS1801-04-5	...SCREW	504903	4
821	NAS514P440-5P	...SCREW	504903	22
824	NAS514P440-7P	...SCREW	504903	1

MISSING ITEM NUMBERS NOT APPLICABLE

– ITEM NOT ILLUSTRATED

BOEING PROPRIETARY - Copyright © - Unpublished Work - See title page for details.

FIG ITEM	PART NUMBER	1 2 3 4 5 6 7 NOMENCLATURE	EFFECT FROM TO	UNITS PER ASSY
67				
827	285T0449-1	...COVER-UPR SUPPLIER CODE: V89954	504903	1
830	285T0449-9	...COVER ASSY-LWR SUPPLIER CODE: V89954	504903	1
833	285T0448-9	...PANEL ASSY-FRONT SUPPLIER CODE: V89954 USED ON: 285T0450-4	504903	1
833	285T0448-4	...PANEL ASSY-FRONT SUPPLIER CODE: V89954 USED ON: 285T0450-2	504903	1
836	BACS21DD1B	....STUD ASSY SUPPLIER CODE: V08524 SPECIFICATION NUMBER: BACS21DD1B	504903	4
839	SF6G6CBB5D	....NUT SUPPLIER CODE: V12324 SPECIFICATION NUMBER: BACN10PA06-6	504903	5
842	285T0451-1	....CLIP- SUPPLIER CODE: V89954 ATTACHING PARTS	504903	1
- 845	BACR15BA2AD	....RIVET- SIZE DETERMINED ON INSTL. -------*-------	504903	2

MISSING ITEM NUMBERS NOT APPLICABLE

- ITEM NOT ILLUSTRATED

BOEING PROPRIETARY - Copyright © - Unpublished Work - See title page for details.

FIG ITEM	PART NUMBER	1 2 3 4 5 6 7 NOMENCLATURE	EFFECT FROM TO	UNITS PER ASSY
67				
848	RMF9201M40	....NUTPLATE SUPPLIER CODE: V72962 SPECIFICATION NUMBER: BACN10JN04 OPTIONAL PART: BRFM20A04L V52828 MF1000-04BAC V15653 NS103218-40 V80539 MF53049-04 V15653 T8124S04S V11815 VN252A40L V92215 ATTACHING PARTS	504903	1
- 851	BACR15BA3AD	....RIVET- SIZE DETERMINED ON INSTL. -------*-------	504903	2
854	285T0448-10	....PANEL- SUPPLIER CODE: V89954 USED ON: 285T0448-9	504903	1
854	285T0448-5	....PANEL- SUPPLIER CODE: V89954 USED ON: 285T0448-4	504903	1
857	285T0449-4	...PANEL ASSY-SIDE SUPPLIER CODE: V89954	504903	1

MISSING ITEM NUMBERS NOT APPLICABLE

- ITEM NOT ILLUSTRATED

BOEING PROPRIETARY - Copyright © - Unpublished Work - See title page for details.

FIG ITEM	PART NUMBER	1 2 3 4 5 6 7 NOMENCLATURE	EFFECT FROM TO	UNITS PER ASSY
67				
860	RMF9201M40	....NUTPLATE SUPPLIER CODE: V72962 SPECIFICATION NUMBER: BACN10JN04 OPTIONAL PART: BRFM20A04L V52828 MF1000-04BAC V15653 NS103218-40 V80539 MF53049-04 V15653 T8124S04S V11815 VN252A40L V92215 ATTACHING PARTS	504903	6
- 863	BACR15BA3AD	....RIVET- SIZE DETERMINED ON INSTL. -------*-------	504903	12
866	F22A27M22-40	....NUT-ANCHOR SUPPLIER CODE: V0217B ATTACHING PARTS	504903	3
- 869	BACR15BA2AD	....RIVET- SIZE DETERMINED ON INSTL. -------*-------	504903	6
872	285T0447-5	....CLIP- SUPPLIER CODE: V89954	504903	1
875	285T0449-8	....PANEL- SUPPLIER CODE: V89954	504903	1
878	285T0449-11	...PANEL ASSY-SIDE SUPPLIER CODE: V89954	504903	1

MISSING ITEM NUMBERS NOT APPLICABLE

- ITEM NOT ILLUSTRATED

BOEING PROPRIETARY - Copyright © - Unpublished Work - See title page for details.

FIG ITEM	PART NUMBER	1 2 3 4 5 6 7 NOMENCLATURE	EFFECT FROM TO	UNITS PER ASSY
67				
881	RMF9201M40	....NUTPLATE SUPPLIER CODE: V72962 SPECIFICATION NUMBER: BACN10JN04 OPTIONAL PART: BRFM20A04L V52828 MF1000-04BAC V15653 NS103218-40 V80539 MF53049-04 V15653 T8124S04S V11815 VN252A40L V92215 ATTACHING PARTS	504903	5
- 884	BACR15BA3AD	....RIVET- SIZE DETERMINED ON INSTL. -------*-------	504903	10
887	F22A27M22-40	....NUT-ANCHOR SUPPLIER CODE: V0217B ATTACHING PARTS	504903	3
- 890	BACR15BA2AD	....RIVET- SIZE DETERMINED ON INSTL. -------*-------	504903	6
893	285T0447-5	....CLIP- SUPPLIER CODE: V89954	504903	1
896	285T0449-12	....PANEL- SUPPLIER CODE: V89954	504903	1
899	285T0447-1	...PANEL ASSY-REAR SUPPLIER CODE: V89954	504903	1
902	F22A27M22-40	....NUT-ANCHOR SUPPLIER CODE: V0217B ATTACHING PARTS	504903	3
- 905	BACR15BB2AD	....RIVET- SIZE DETERMINED ON INSTL. -------*-------	504903	6
908	285T0447-4	....CLIP- SUPPLIER CODE: V89954	504903	1

MISSING ITEM NUMBERS NOT APPLICABLE

- ITEM NOT ILLUSTRATED

BOEING PROPRIETARY - Copyright © - Unpublished Work - See title page for details.

FIG ITEM	PART NUMBER	1 2 3 4 5 6 7 NOMENCLATURE	EFFECT FROM TO	UNITS PER ASSY
67				
911	285T0447-3	....SPACER- SUPPLIER CODE: V89954	504903	1
914	285T0447-2	....PANEL- SUPPLIER CODE: V89954	504903	1
917	285T0446-1	...SUPPORT ASSY-PWR SUPPLY SUPPLIER CODE: V89954	504903	1
918	TC140	....PLATE-MTG SUPPLIER CODE: V59730 SPECIFICATION NUMBER: STBP19M1 ATTACHING PARTS	504903	1
- 919	NAS600-6P	....SCREW -------*-------	504903	1
920	TC140	....PLATE-MTG SUPPLIER CODE: V59730 SPECIFICATION NUMBER: STBP19M1 ATTACHING PARTS	504903	2
- 923	MS20470A4-6	....RIVET -------*-------	504903	2
926	F22A27M22-40	....NUT-ANCHOR SUPPLIER CODE: V0217B ATTACHING PARTS	504903	1
- 929	BACR15BB2AD	....RIVET- SIZE DETERMINED ON INSTL. -------*-------	504903	2

MISSING ITEM NUMBERS NOT APPLICABLE

- ITEM NOT ILLUSTRATED

BOEING PROPRIETARY - Copyright © - Unpublished Work - See title page for details.

FIG ITEM	PART NUMBER	1 2 3 4 5 6 7 NOMENCLATURE	EFFECT FROM TO	UNITS PER ASSY
67				
931	RMF9201M40	....NUTPLATE SUPPLIER CODE: V72962 SPECIFICATION NUMBER: BACN10JN04 OPTIONAL PART: BRFM20A04L V52828 MF1000-04BAC V15653 NS103218-40 V80539 MF53049-04 V15653 T8124S04S V11815 VN252A40L V92215 ATTACHING PARTS	504903	8
- 934	BACR15BA3AD	....RIVET- SIZE DETERMINED ON INSTL. -------*-------	504903	16
937	285T0446-2	....BRACKET-SPRT SUPPLIER CODE: V89954	504903	1
940	285T0445-5	..MODULE ASSY-ELECT. SUPPLIER CODE: V89954	504903	1
- 943	285T0445-6	...MODULE ASSY- SUPPLIER CODE: V89954	504903	RF
946	285T0253-5	....PMD ASSY- SUPPLIER CODE: V89954	504903	2
949	BAC27TEX2007	.....DECAL- OPTIONAL PART: WHB673-10X05 V85480	504903	1
949	WHB673-10X05	.....DECAL- SUPPLIER CODE: V85480 OPTIONAL PART: BAC27TEX2007	504903	1

MISSING ITEM NUMBERS NOT APPLICABLE

- ITEM NOT ILLUSTRATED

BOEING PROPRIETARY - Copyright © - Unpublished Work - See title page for details.

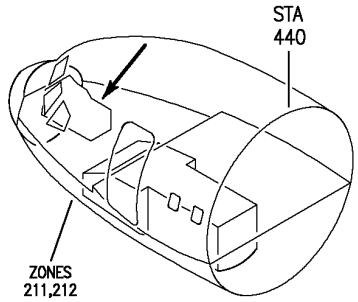

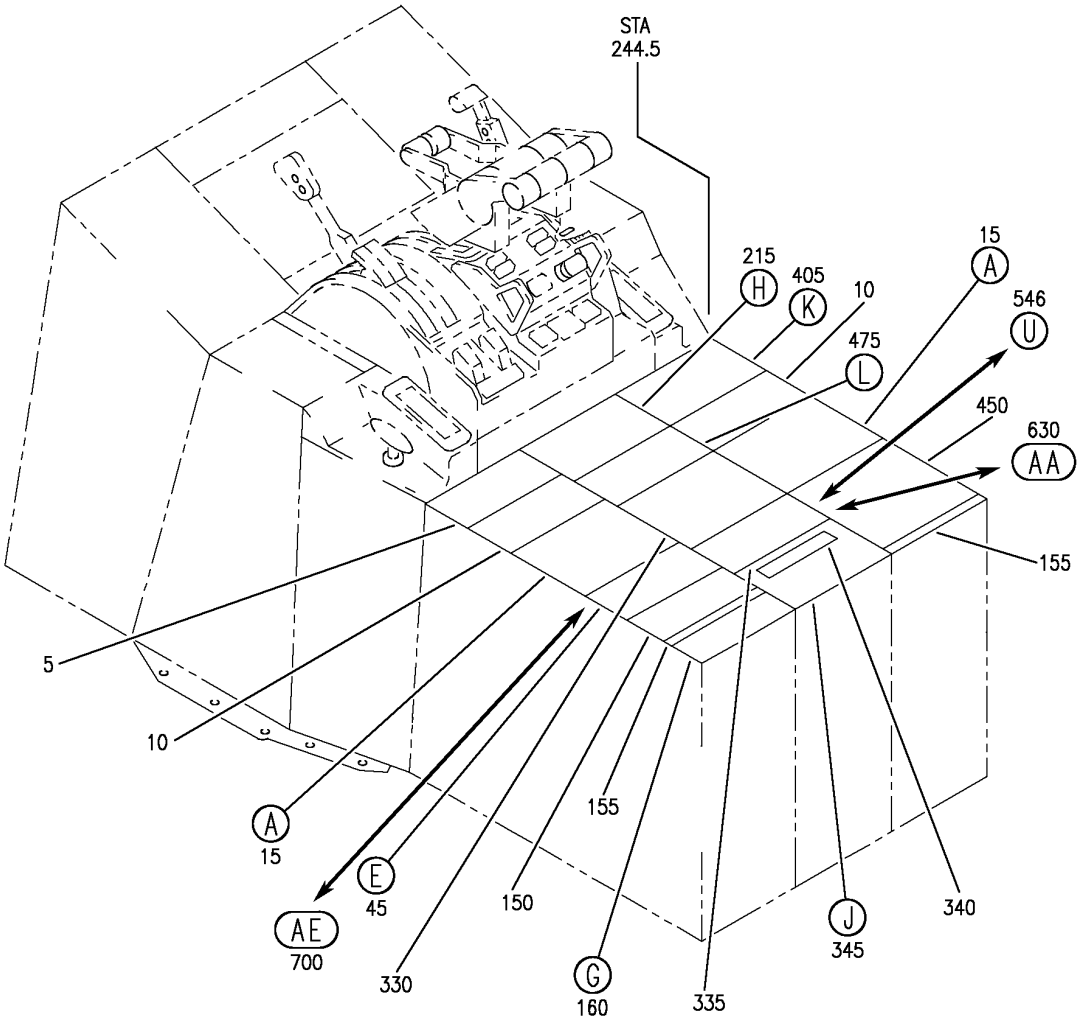

PANEL INSTL-P8 ELECTRONICS (CONTROL STAND AFT ELECTRONIC PANEL ONLY)
FIGURE 70 (SHEET 1)

BOEING PROPRIETARY - Copyright © - Unpublished Work - See title page for details.

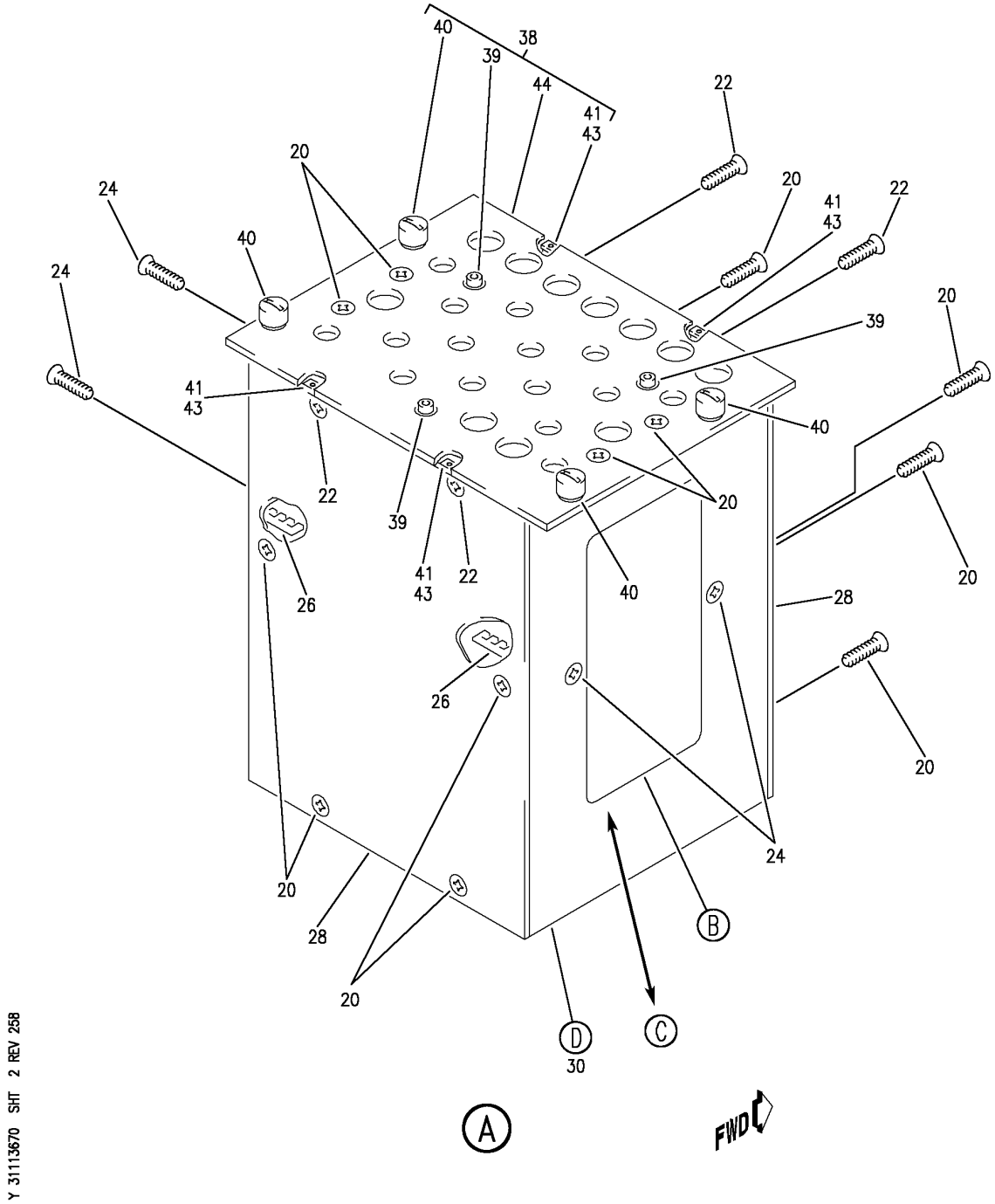

PANEL INSTL-P8 ELECTRONICS (CONTROL STAND AFT ELECTRONIC PANEL ONLY)
FIGURE 70 (SHEET 2)

BOEING PROPRIETARY - Copyright © - Unpublished Work - See title page for details.

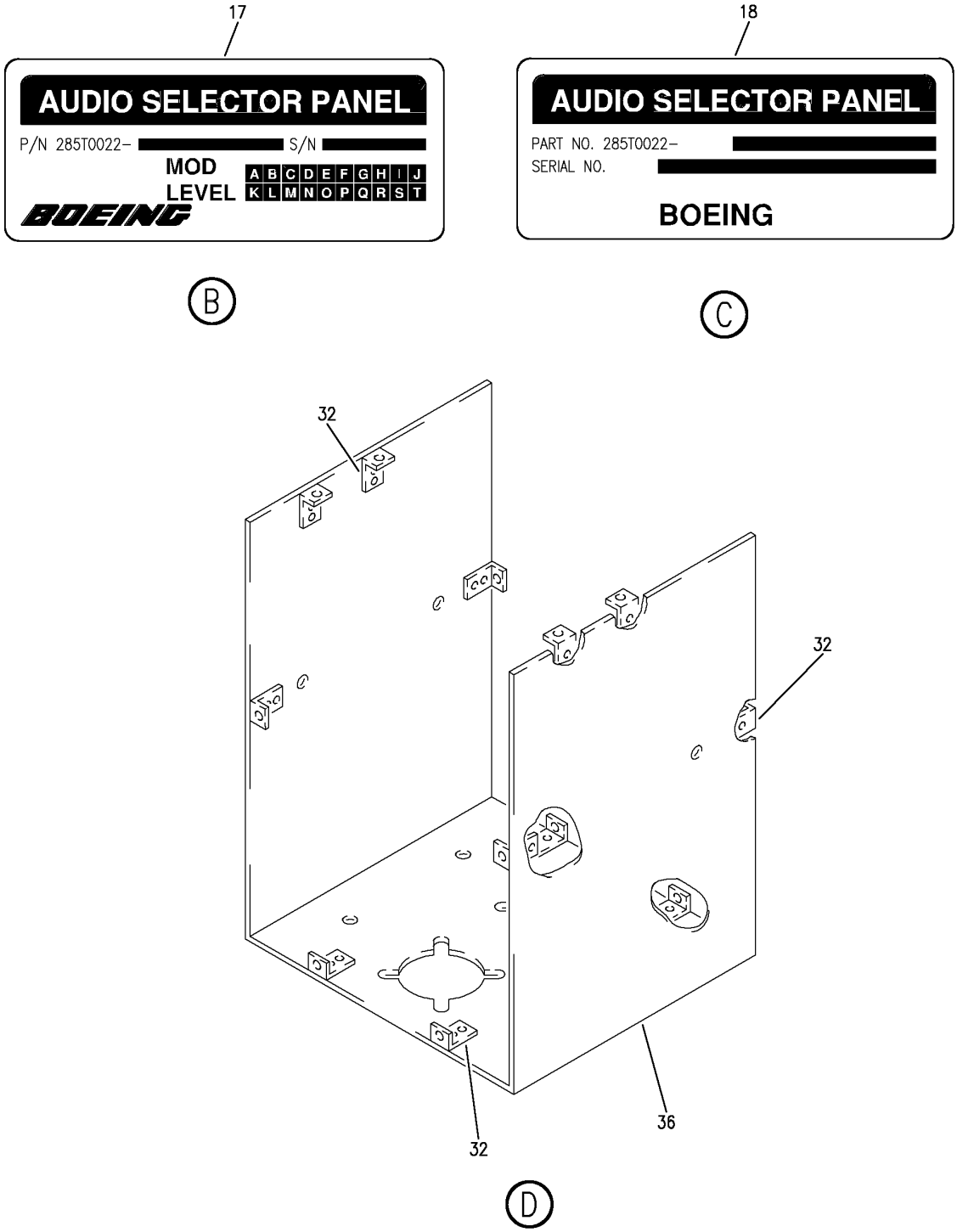

Y 31113670 SHT 3 REV 254

PANEL INSTL-P8 ELECTRONICS (CONTROL STAND AFT ELECTRONIC PANEL ONLY)
FIGURE 70 (SHEET 3)

BOEING PROPRIETARY - Copyright © - Unpublished Work - See title page for details.

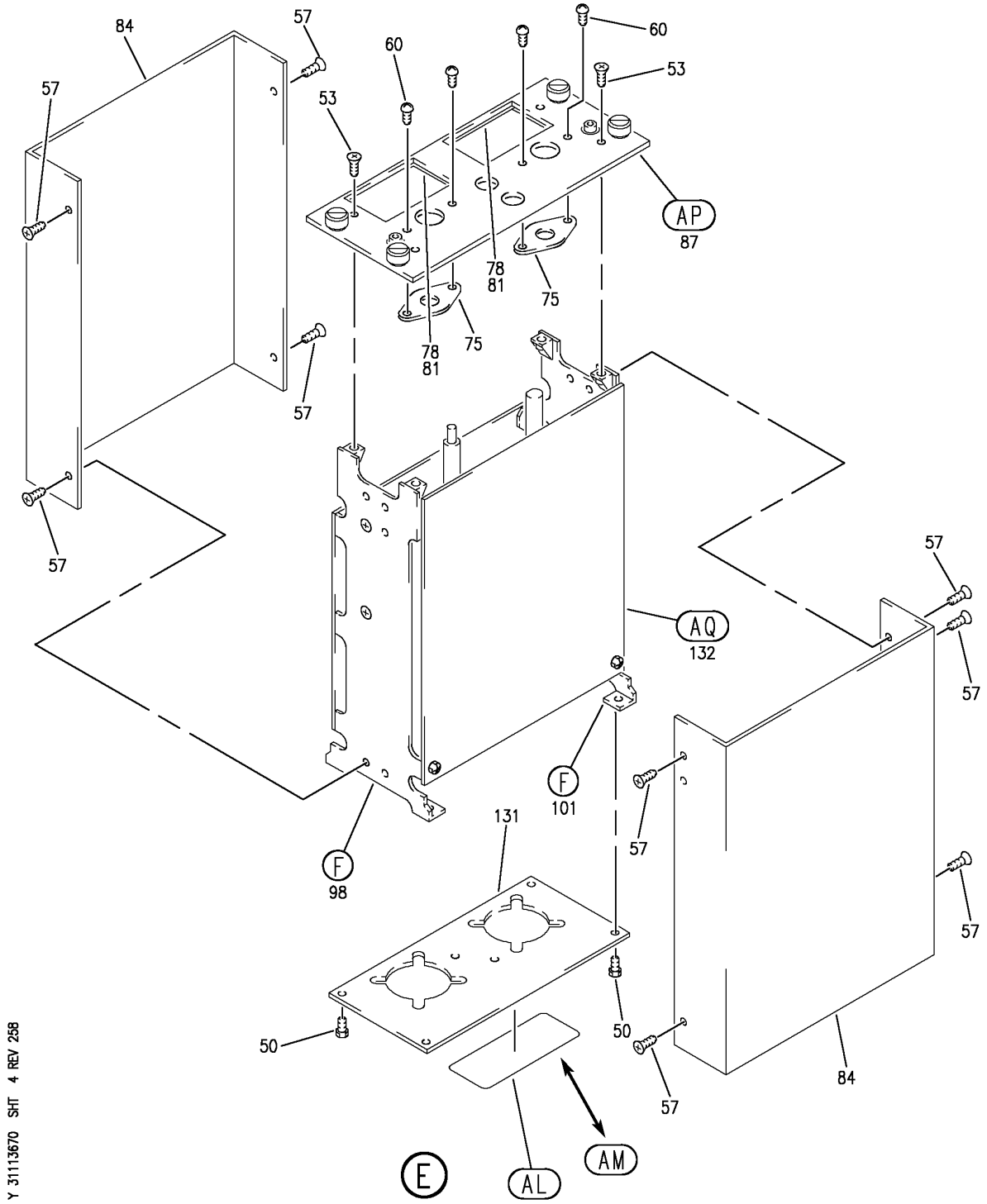

PANEL INSTL-P8 ELECTRONICS (CONTROL STAND AFT ELECTRONIC PANEL ONLY)
FIGURE 70 (SHEET 4)

BOEING PROPRIETARY - Copyright © - Unpublished Work - See title page for details.

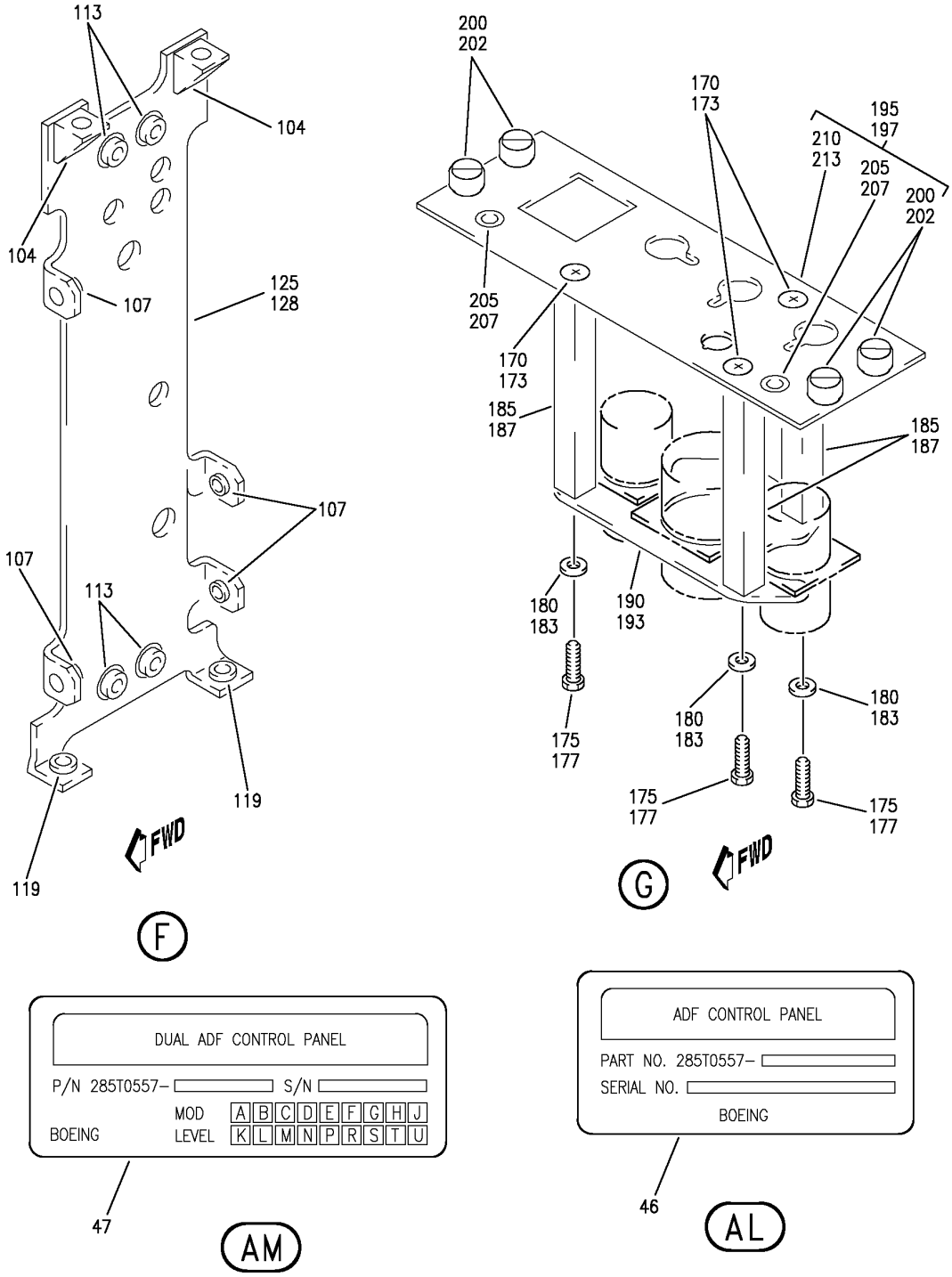

Y 31113670 SHT 5 REV 258

PANEL INSTL-P8 ELECTRONICS (CONTROL STAND AFT ELECTRONIC PANEL ONLY)
FIGURE 70 (SHEET 5)

BOEING PROPRIETARY - Copyright © - Unpublished Work - See title page for details.

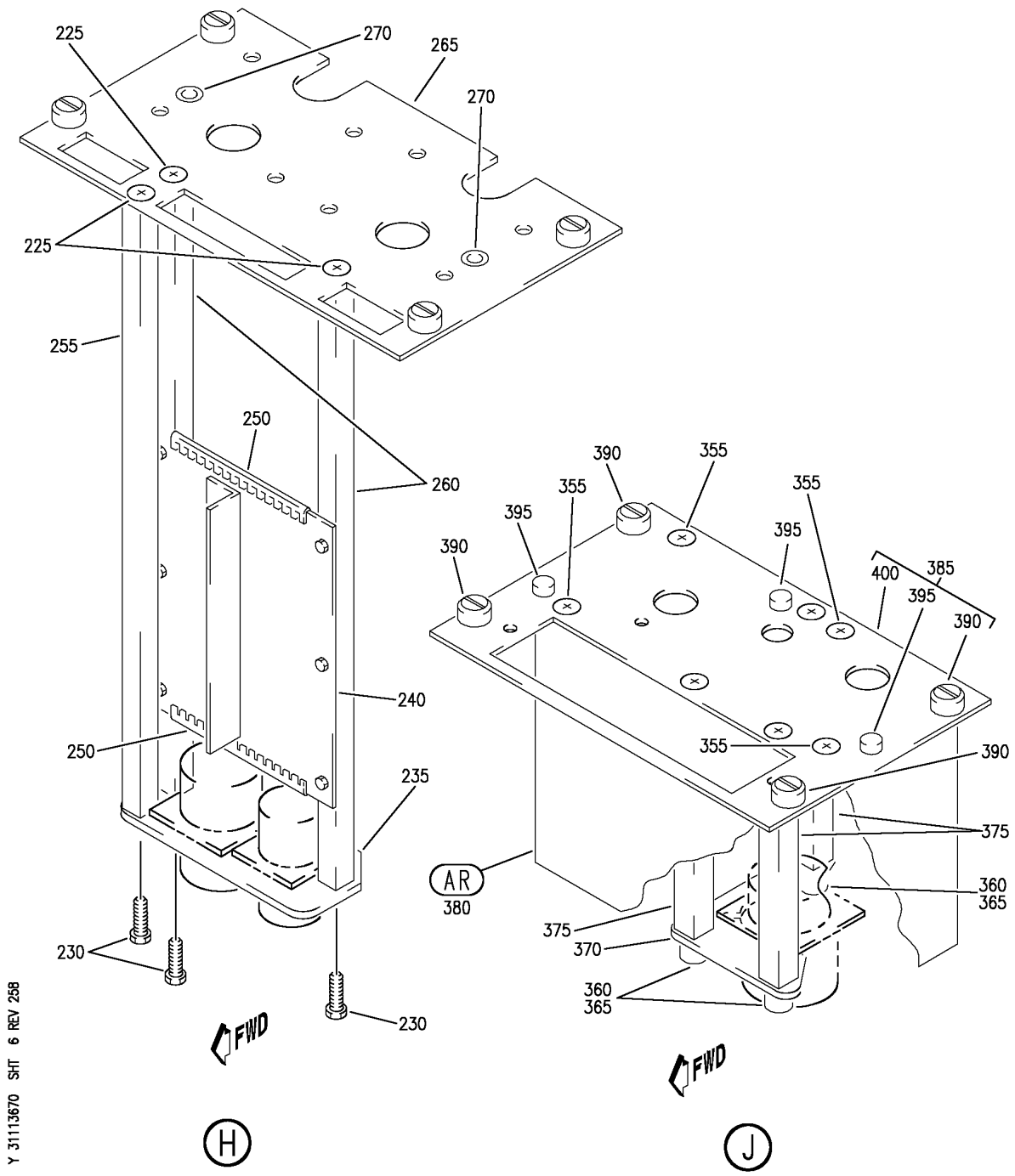

PANEL INSTL-P8 ELECTRONICS (CONTROL STAND AFT ELECTRONIC PANEL ONLY)
FIGURE 70 (SHEET 6)

BOEING PROPRIETARY - Copyright © - Unpublished Work - See title page for details.

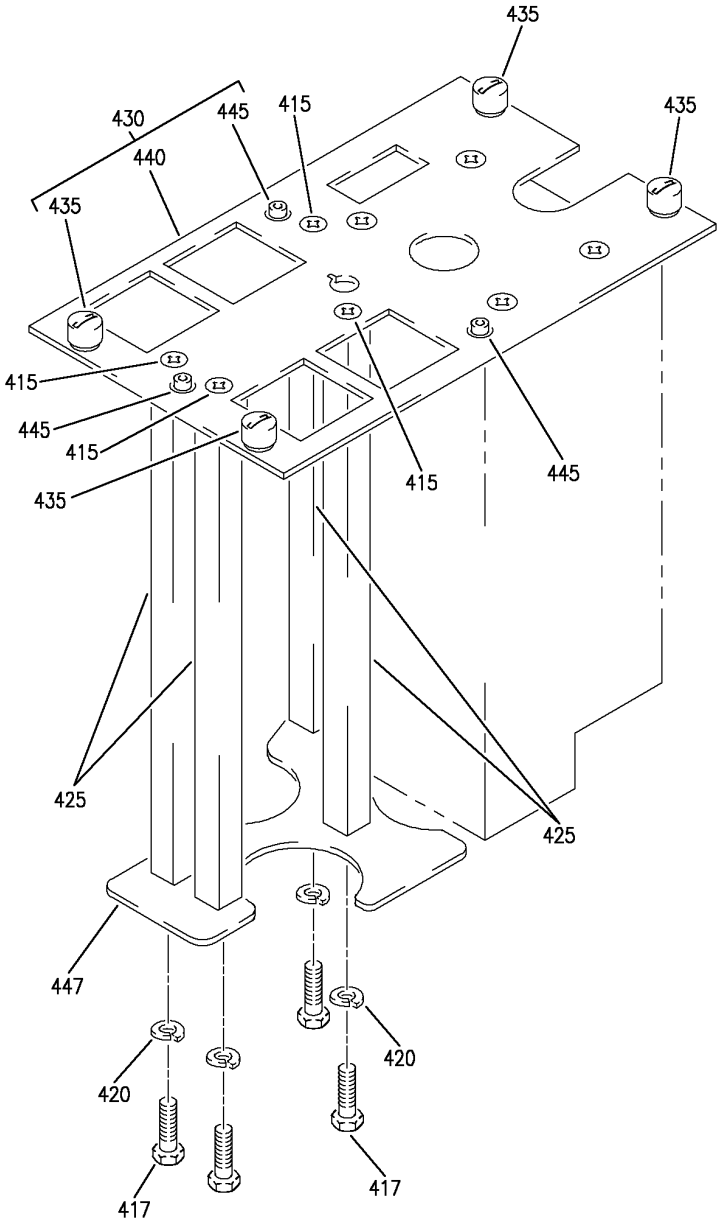

Y 31113670 SHT 7 REV 254

PANEL INSTL-P8 ELECTRONICS (CONTROL STAND AFT ELECTRONIC PANEL ONLY)
FIGURE 70 (SHEET 7)

BOEING PROPRIETARY - Copyright © - Unpublished Work - See title page for details.

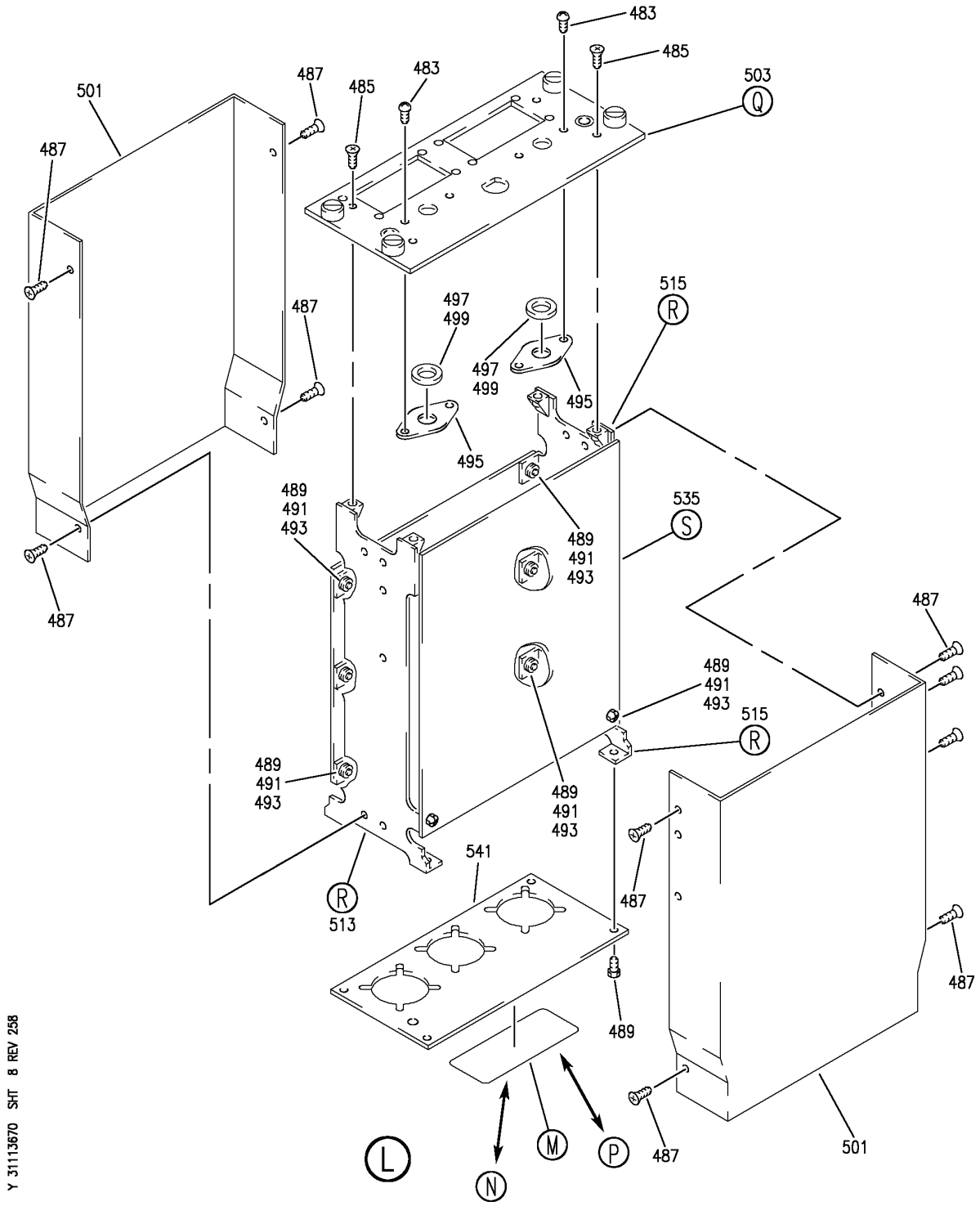

PANEL INSTL-P8 ELECTRONICS (CONTROL STAND AFT ELECTRONIC PANEL ONLY)
FIGURE 70 (SHEET 8)

BOEING PROPRIETARY - Copyright © - Unpublished Work - See title page for details.

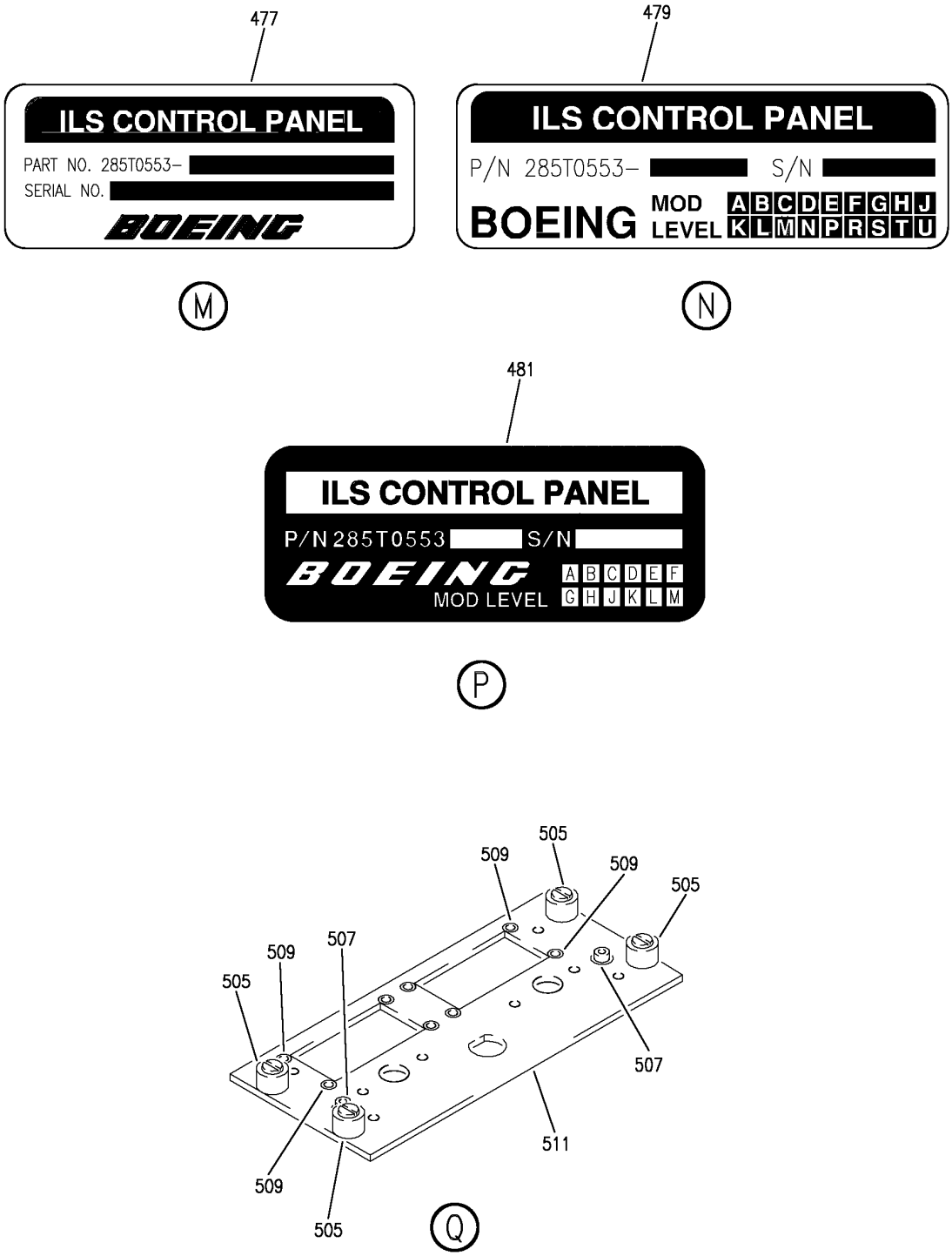

Y 31113670 SHT 9 REV 254

PANEL INSTL-P8 ELECTRONICS (CONTROL STAND AFT ELECTRONIC PANEL ONLY)
FIGURE 70 (SHEET 9)

BOEING PROPRIETARY - Copyright © - Unpublished Work - See title page for details.

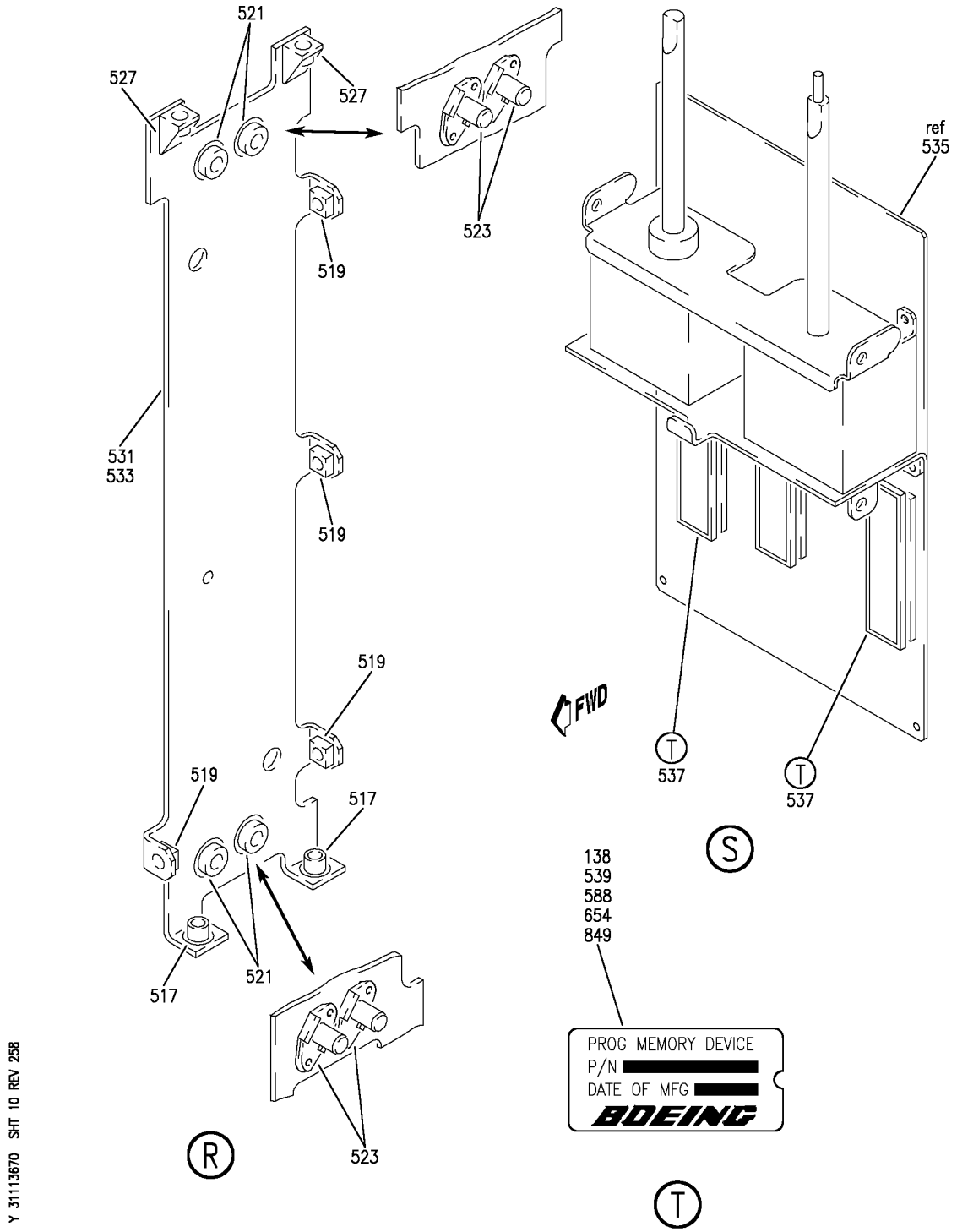

PANEL INSTL-P8 ELECTRONICS (CONTROL STAND AFT ELECTRONIC PANEL ONLY)
FIGURE 70 (SHEET 10)

BOEING PROPRIETARY - Copyright © - Unpublished Work - See title page for details.

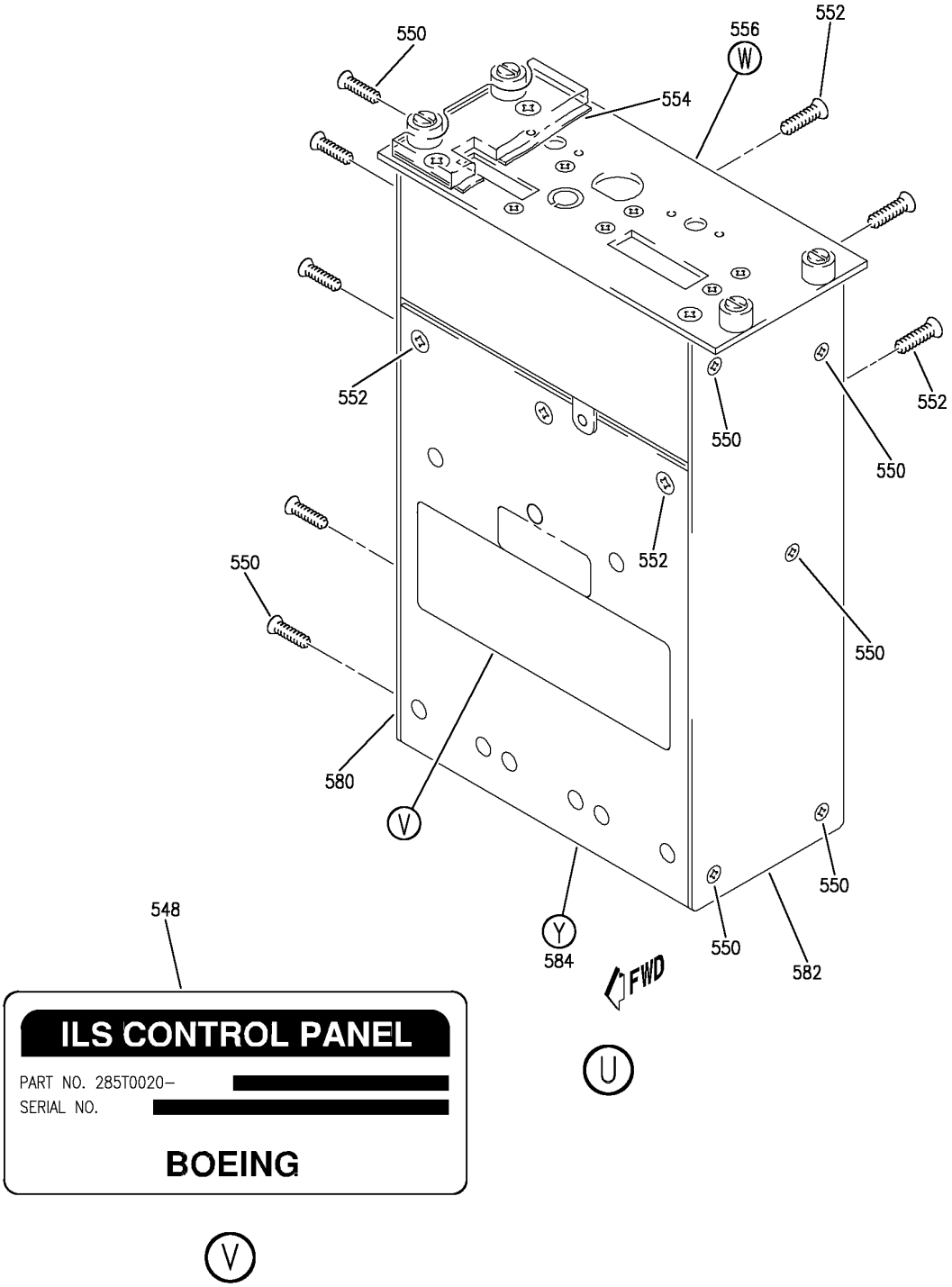

PANEL INSTL-P8 ELECTRONICS (CONTROL STAND AFT ELECTRONIC PANEL ONLY)
FIGURE 70 (SHEET 11)

BOEING PROPRIETARY - Copyright © - Unpublished Work - See title page for details.

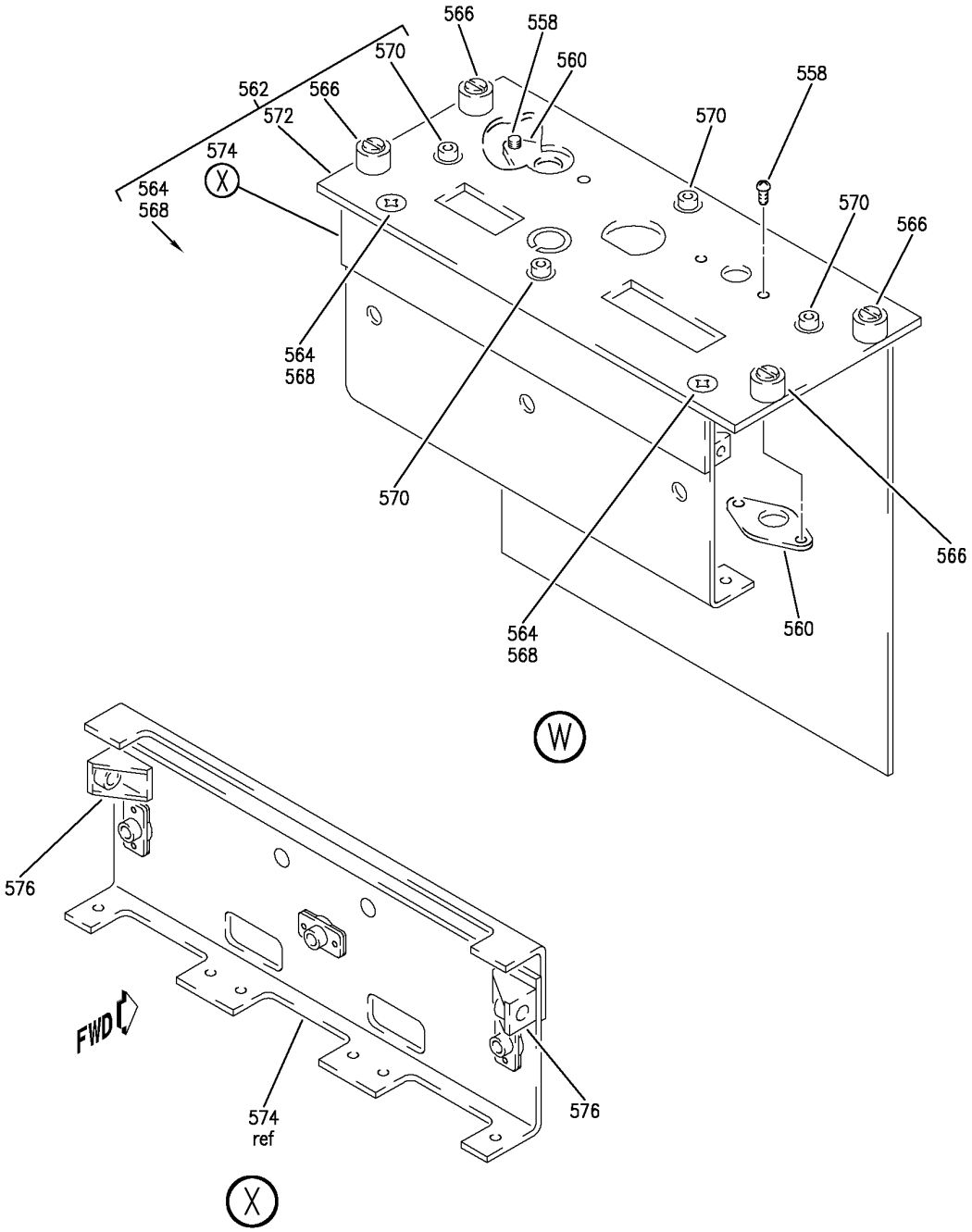

PANEL INSTL-P8 ELECTRONICS (CONTROL STAND AFT ELECTRONIC PANEL ONLY)
FIGURE 70 (SHEET 12)

BOEING PROPRIETARY - Copyright © - Unpublished Work - See title page for details.

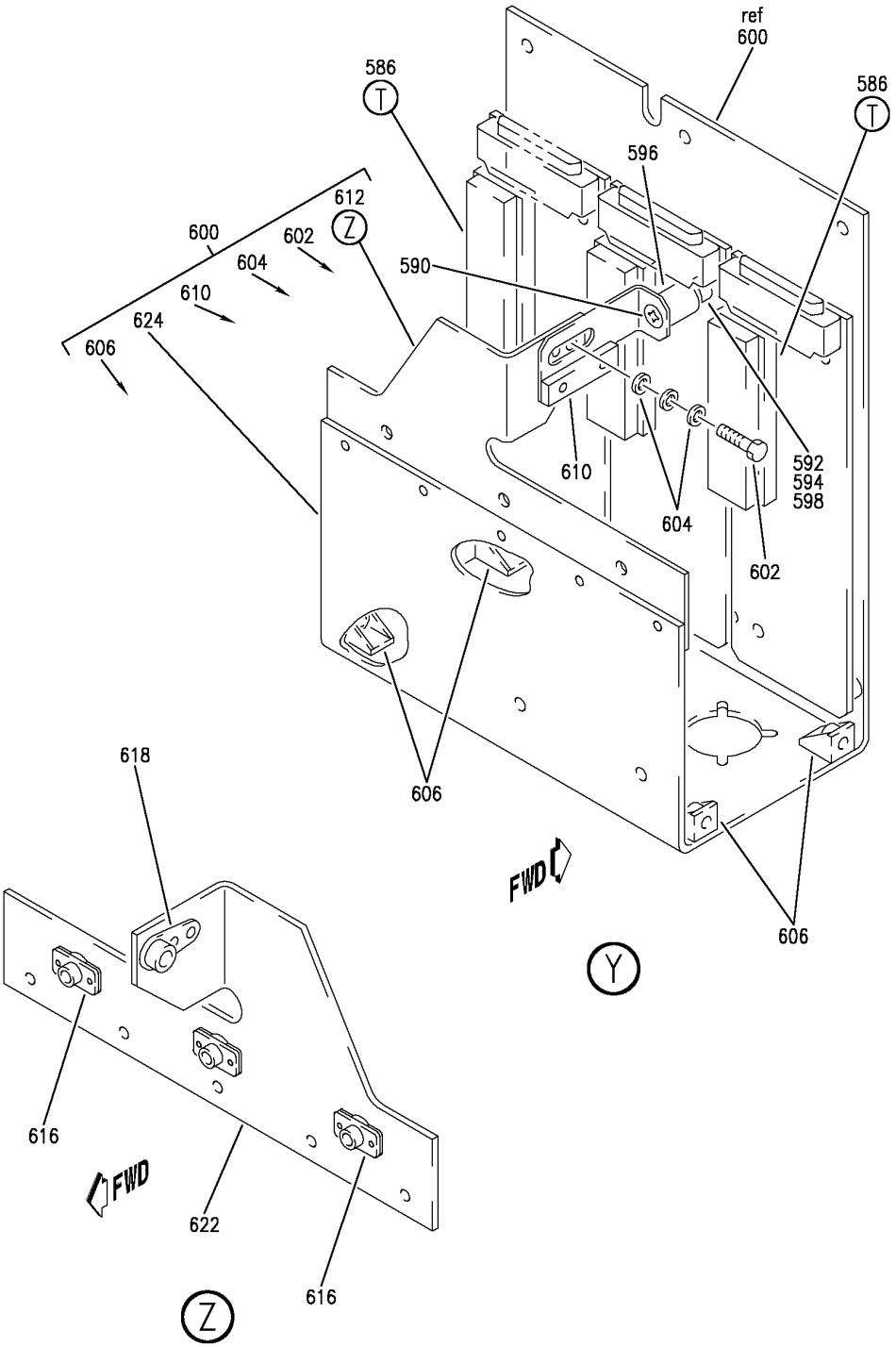

Y 31113670 SHT 13 REV 254

PANEL INSTL-P8 ELECTRONICS (CONTROL STAND AFT ELECTRONIC PANEL ONLY)
FIGURE 70 (SHEET 13)

BOEING PROPRIETARY - Copyright © - Unpublished Work - See title page for details.

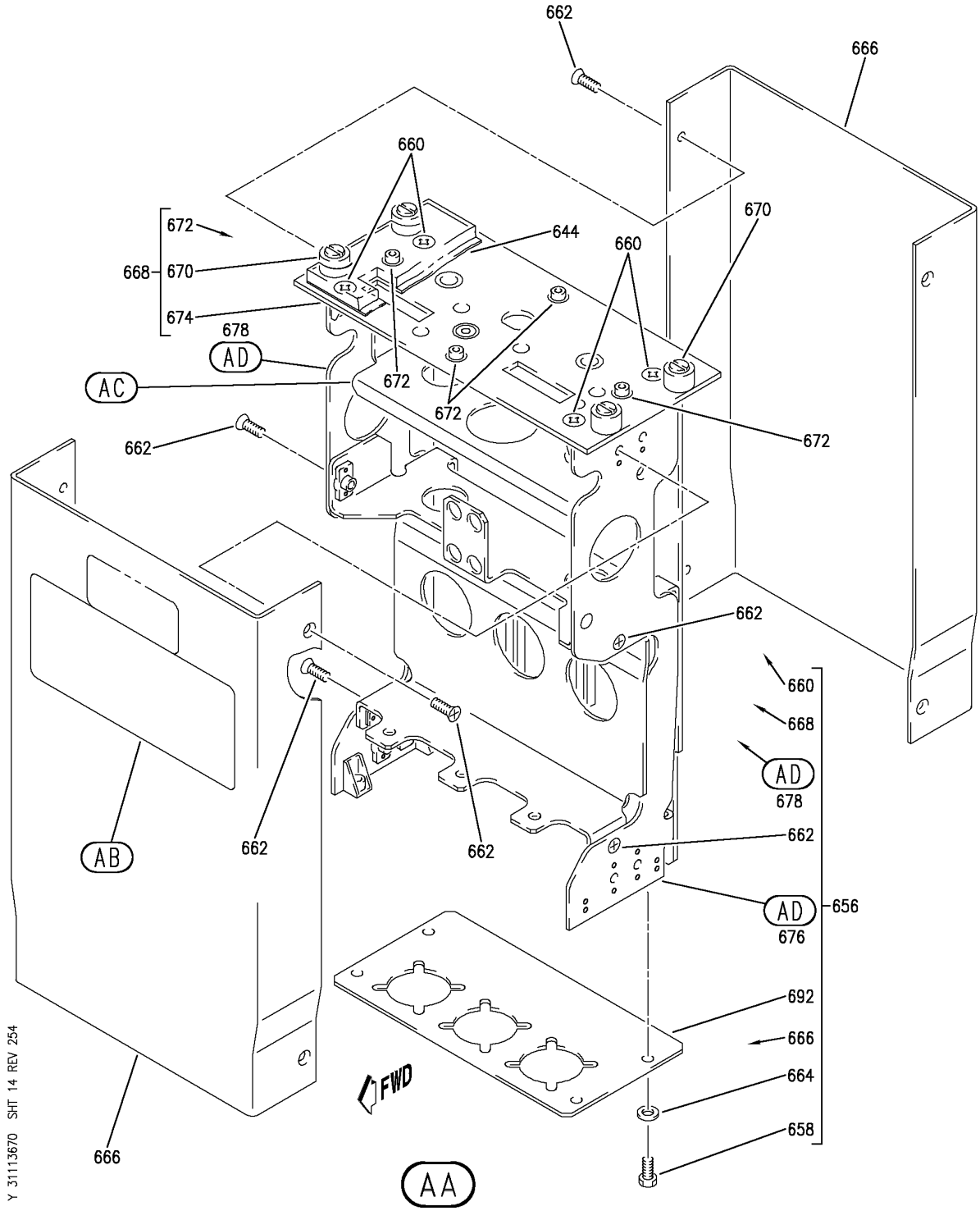

PANEL INSTL-P8 ELECTRONICS (CONTROL STAND AFT ELECTRONIC PANEL ONLY)
FIGURE 70 (SHEET 14)

BOEING PROPRIETARY - Copyright © - Unpublished Work - See title page for details.

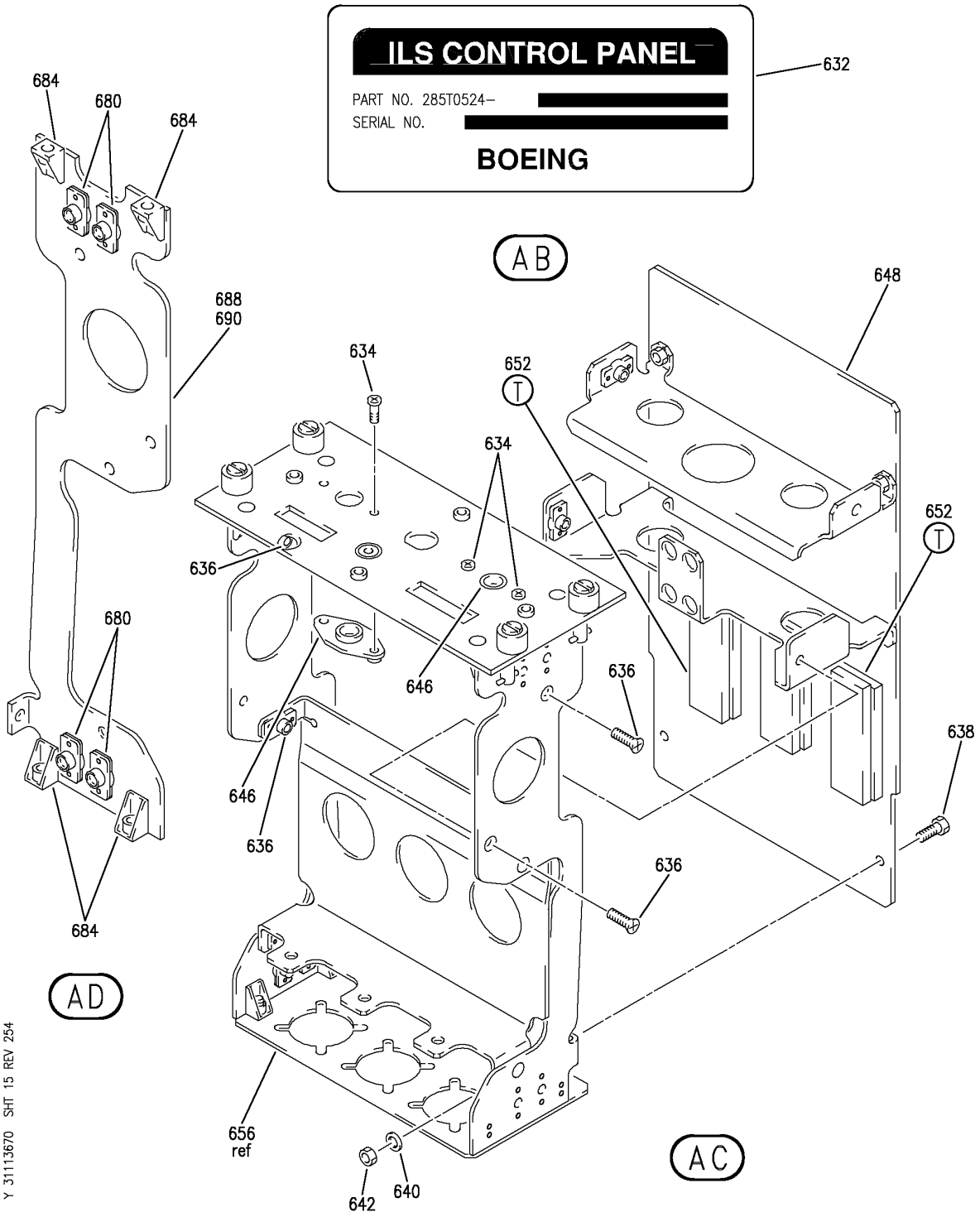

PANEL INSTL-P8 ELECTRONICS (CONTROL STAND AFT ELECTRONIC PANEL ONLY)
FIGURE 70 (SHEET 15)

BOEING PROPRIETARY - Copyright © - Unpublished Work - See title page for details.

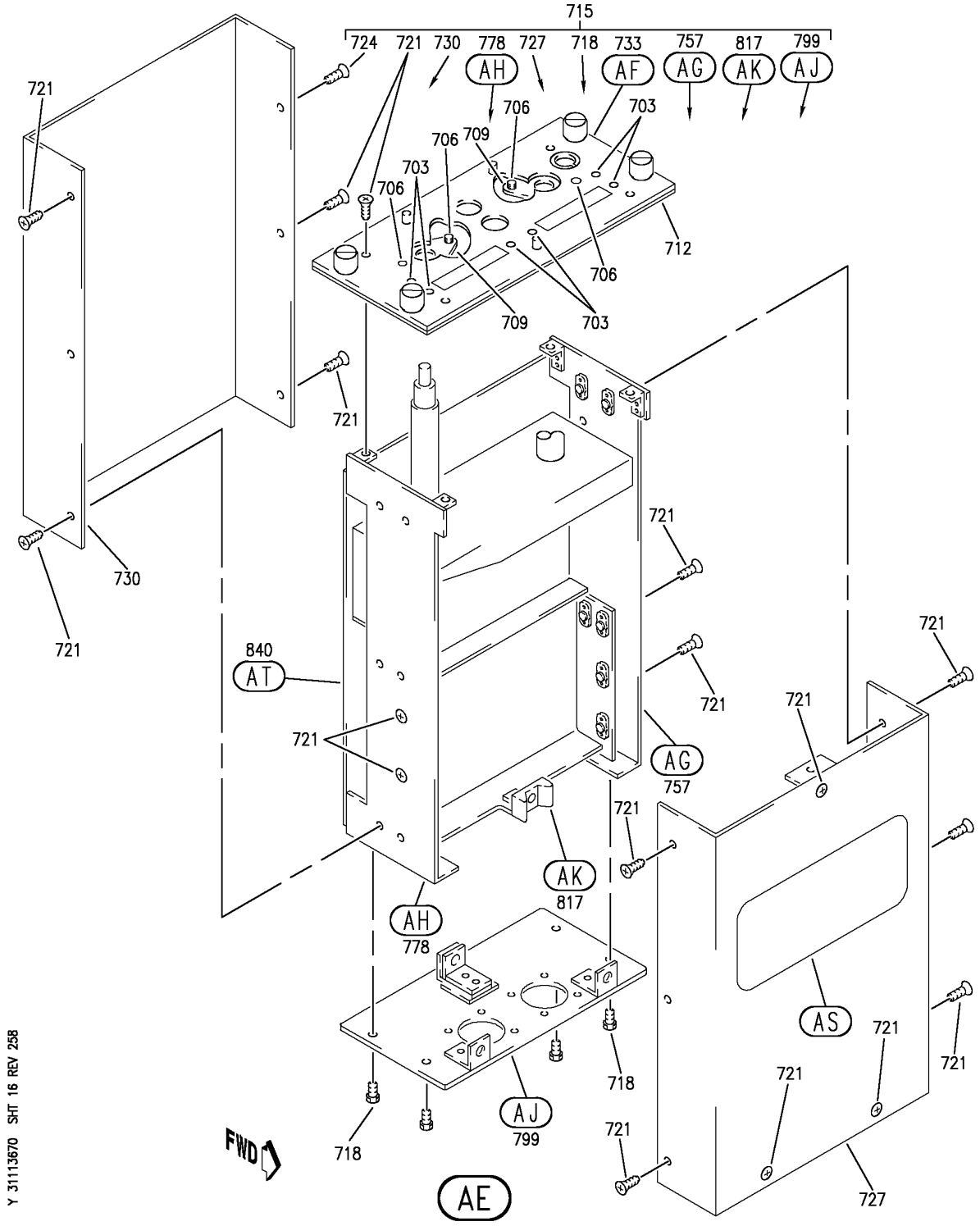

PANEL INSTL-P8 ELECTRONICS (CONTROL STAND AFT ELECTRONIC PANEL ONLY)
FIGURE 70 (SHEET 16)

BOEING PROPRIETARY - Copyright © - Unpublished Work - See title page for details.

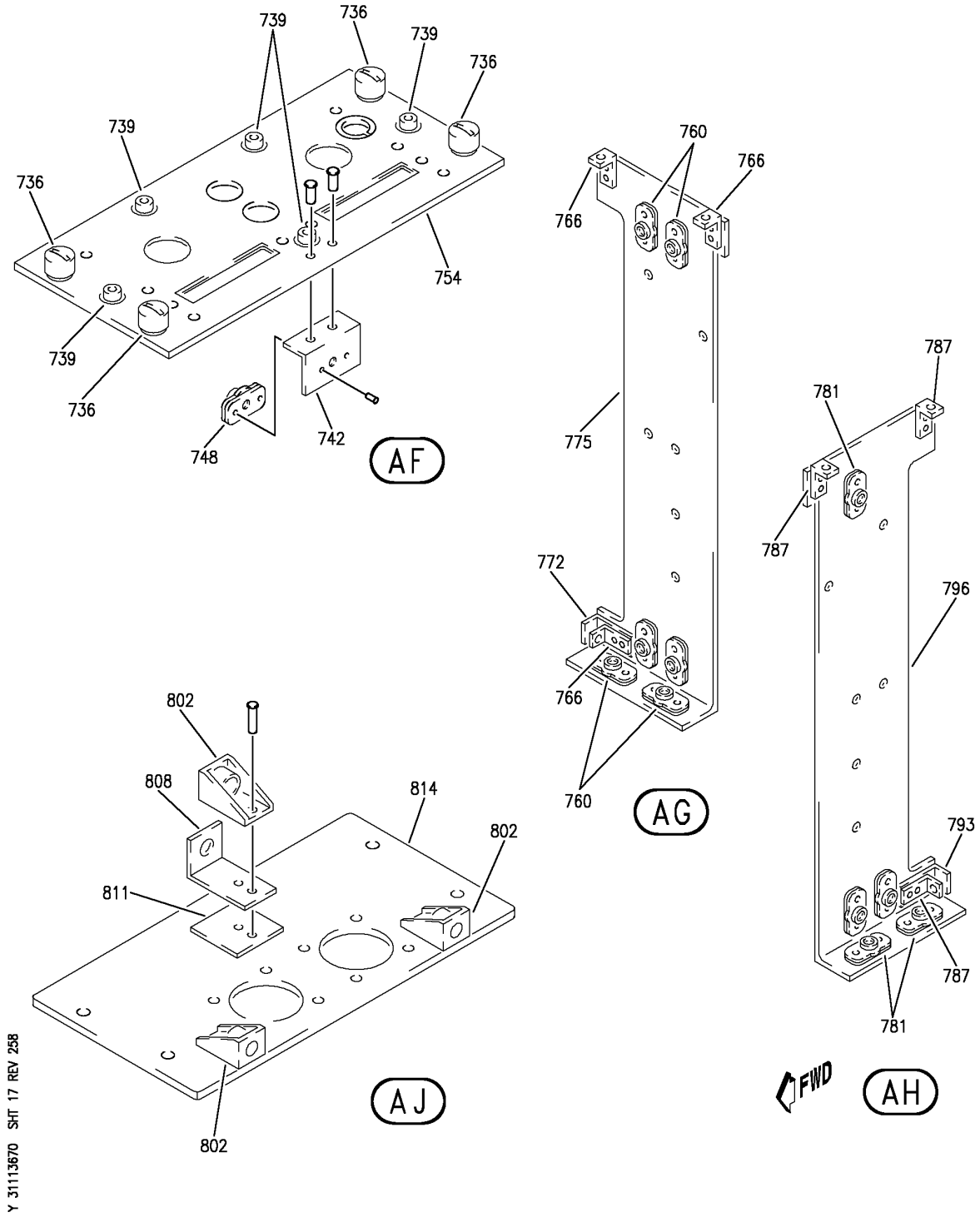

PANEL INSTL-P8 ELECTRONICS (CONTROL STAND AFT ELECTRONIC PANEL ONLY)
FIGURE 70 (SHEET 17)

BOEING PROPRIETARY - Copyright © - Unpublished Work - See title page for details.

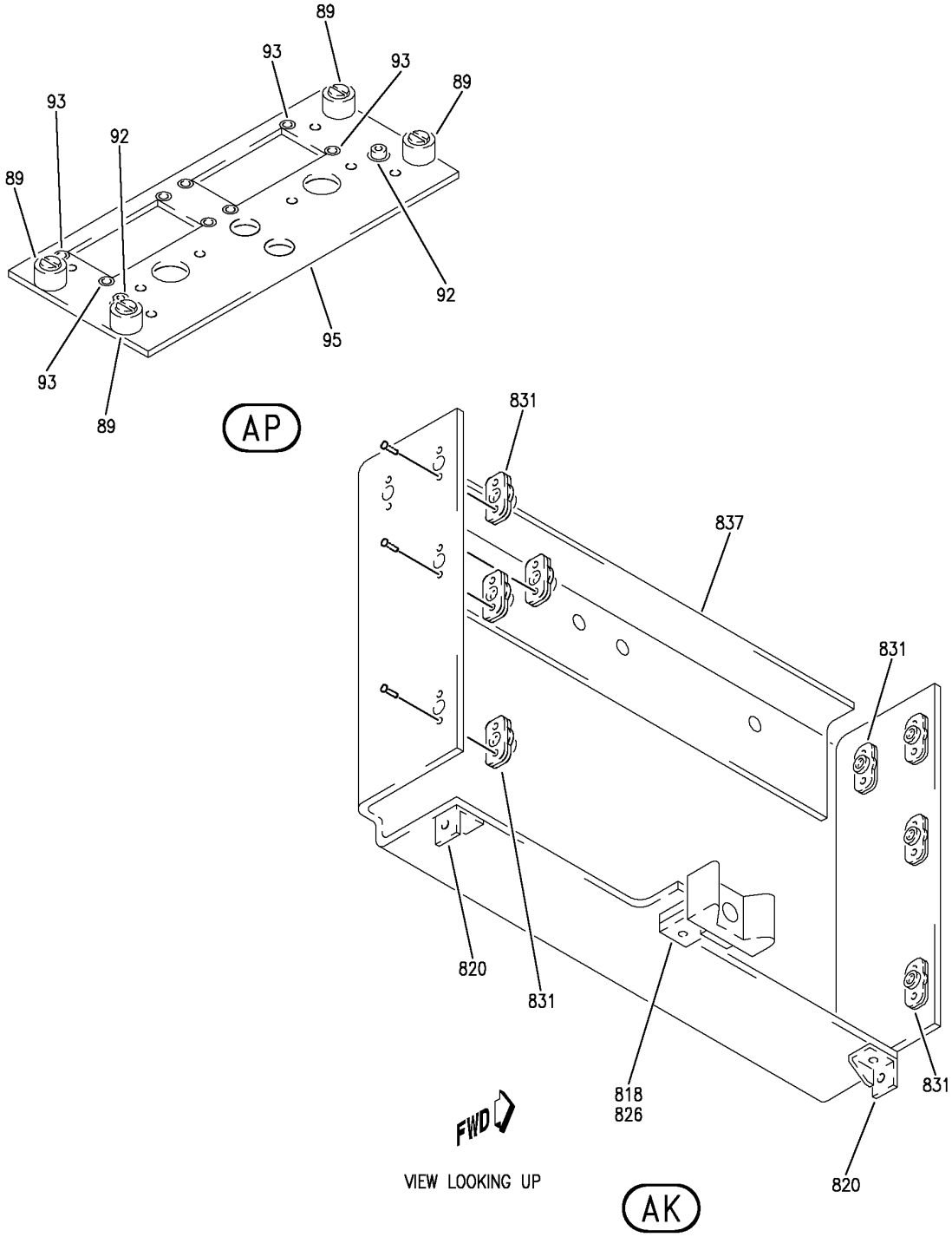

Y 31113670 SHT 18 REV 258

PANEL INSTL-P8 ELECTRONICS (CONTROL STAND AFT ELECTRONIC PANEL ONLY)
FIGURE 70 (SHEET 18)

BOEING PROPRIETARY - Copyright © - Unpublished Work - See title page for details.

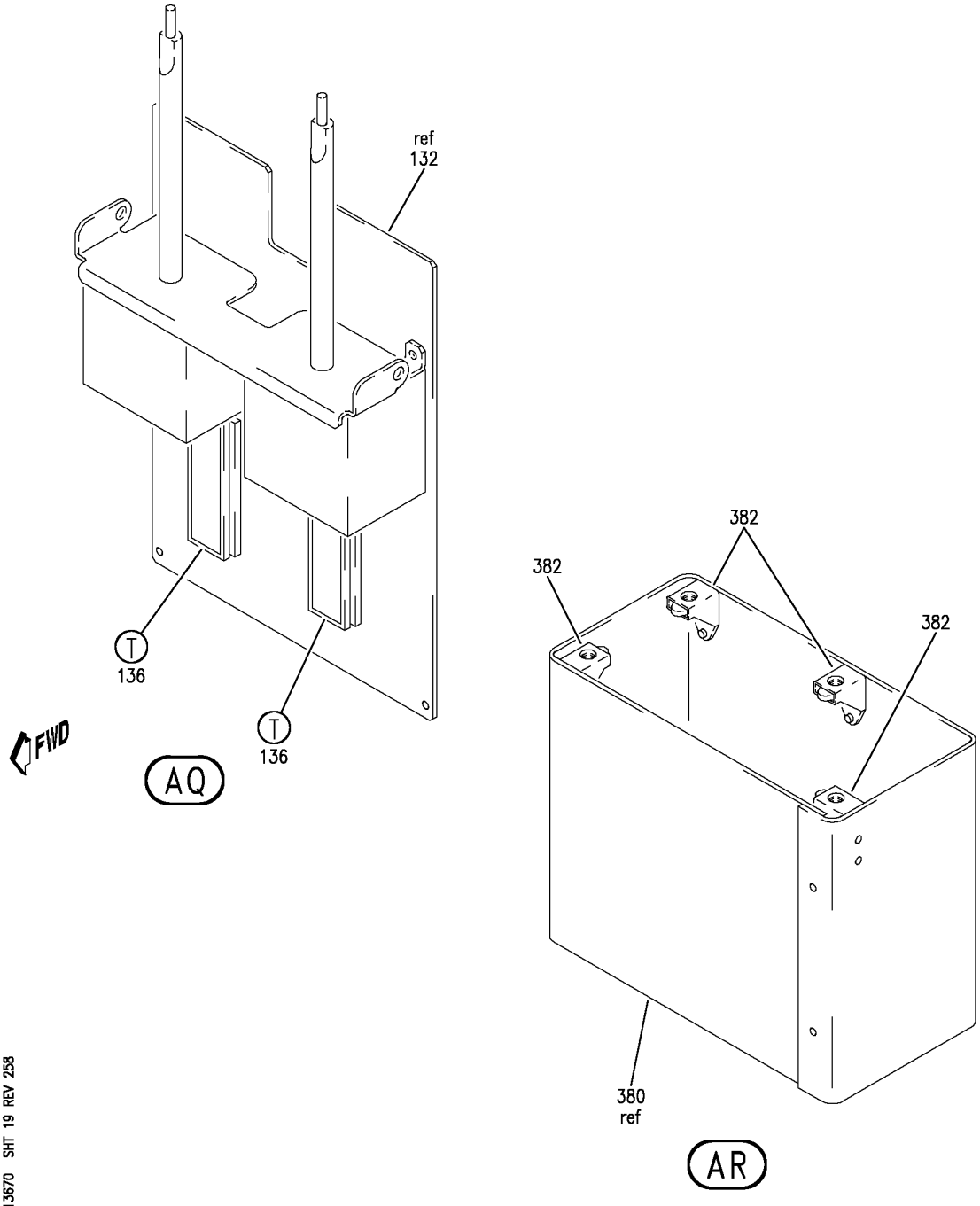

PANEL INSTL-P8 ELECTRONICS (CONTROL STAND AFT ELECTRONIC PANEL ONLY)
FIGURE 70 (SHEET 19)

BOEING PROPRIETARY - Copyright © - Unpublished Work - See title page for details.

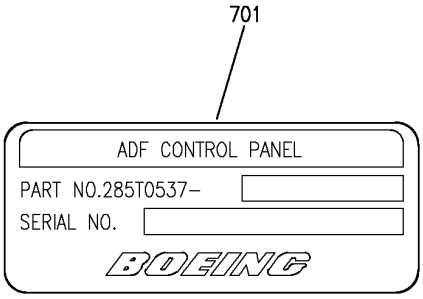

AS

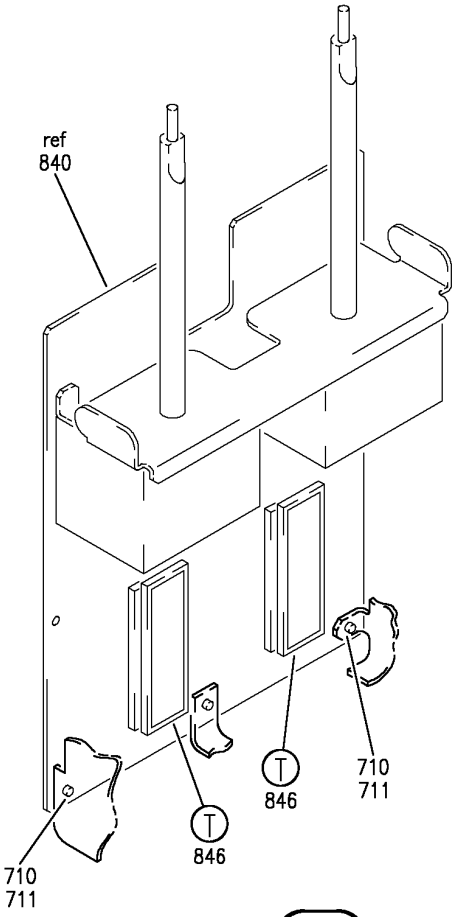

AT

Y 31113670 SHT 20 REV 258

PANEL INSTL-P8 ELECTRONICS (CONTROL STAND AFT ELECTRONIC PANEL ONLY)
FIGURE 70 (SHEET 20)

BOEING PROPRIETARY - Copyright © - Unpublished Work - See title page for details.

FIG ITEM	PART NUMBER	1 2 3 4 5 6 7 NOMENCLATURE	EFFECT FROM TO	UNITS PER ASSY
70				
		PANEL INSTL-P8 ELECTRONICS (CONTROL STAND AFT ELECTRONIC PANEL ONLY)	101102	
- 1	233N6103-28	PANEL INSTL-P8 ELECTRONICS (CONTROL STAND AFT ELECTRONIC PANEL ONLY) FOR NHA/OTHER SYS DET SEE: 25-10-00-15B	101101	RF
- 1	233N6103-128	PANEL INSTL-P8 ELECTRONICS (CONTROL STAND AFT ELECTRONIC PANEL ONLY) FOR NHA/OTHER SYS DET SEE: 25-10-00-15B	102102	RF
5	2041223-0402	.PANEL-RADAR CONTROL (CUSTOMER FURNISHED) SUPPLIER CODE: V97896 SPECIFICATION NUMBER: S220T109-401 ELECTRICAL EQUIP NUMBER: M00075 COMPONENT MAINT MANUAL REF: 34-41-12 FOR BREAKDOWN SEE: 34-43-02-02	101102	RF
10	G7400-27	.PANEL ASSY-VHF CONT (CUSTOMER FURNISHED) SUPPLIER CODE: V99837 ELECTRICAL EQUIP NUMBER: M00078 M00079 COMPONENT MAINT MANUAL REF: 23-10-28 QUALIFIED I/W DATA: G7400-01 I/W G7400-27 BUT -27 HAS EXPANDED CHANNEL (8.33 MHZ) CAPABILITY FOR BREAKDOWN SEE: 23-12-02-03	101102	RF

MISSING ITEM NUMBERS NOT APPLICABLE

– ITEM NOT ILLUSTRATED

BOEING PROPRIETARY - Copyright © - Unpublished Work - See title page for details.

FIG ITEM	PART NUMBER	1 2 3 4 5 6 7 NOMENCLATURE	EFFECT FROM TO	UNITS PER ASSY
70				
15	285T0022-44	.PANEL ASSY-AUDIO SELECTOR SUPPLIER CODE: V89954 ELECTRICAL EQUIP NUMBER: M00070 M00071 COMPONENT MAINT MANUAL REF: 23-51-54 FOR OTHER SYS DETAILS SEE: 23-51-01-05 33-13-01-12	101102	2
15	285T0022-38	.PANEL ASSY-AUDIO SELECTOR SUPPLIER CODE: V89954 ELECTRICAL EQUIP NUMBER: M00070 M00071 COMPONENT MAINT MANUAL REF: 23-51-54 FOR OTHER SYS DETAILS SEE: 23-51-01-05 33-13-01-12	101102	2
15	285T0022-28	.PANEL ASSY-AUDIO SELECTOR SUPPLIER CODE: V89954 ELECTRICAL EQUIP NUMBER: M00070 M00071 COMPONENT MAINT MANUAL REF: 23-51-51 FOR OTHER SYS DETAILS SEE: 23-51-01-05 33-13-01-12	101102	2
17	BAC27TEX4053	..MARKER-ALUMINUM FOIL SUPPLIER CODE: V89954 QUALIFIED OPTIONAL DATA: BAC27TEX4053 OPTIONAL BAC27TEX1992 WHEN USED ASSOCIATED PARTS USED ON: 285T0022-38 285T0022-44	101102	1

MISSING ITEM NUMBERS NOT APPLICABLE

– ITEM NOT ILLUSTRATED

BOEING PROPRIETARY - Copyright © - Unpublished Work - See title page for details.

FIG ITEM	PART NUMBER	1 2 3 4 5 6 7 NOMENCLATURE	EFFECT FROM TO	UNITS PER ASSY
70				
18	BAC27TEX1992	..MARKER-ALUMINUM FOIL QUALIFIED OPTIONAL DATA: BAC27TEX4053 OPTIONAL BAC27TEX1992 WHEN USED ASSOCIATED PARTS USED ON: 285T0022-38 285T0022-44	101102	1
18	BAC27TEX1992	..MARKER-ALUMINUM FOIL USED ON: 285T0022-28	101102	1
20	NAS514P440-5	..SCREW	101102	12
22	NAS514P632-5	..SCREW	101102	4
24	NAS514P440-4	..SCREW	101102	4
26	BACG20ZA350	..GROMMET- USED ON: 285T0022-28 285T0022-38	101102	2
26	BACG20ZA350	..GROMMET- OPTIONAL PART: BACG20ZA000350 USED ON: 285T0022-44	101102	2
26	BACG20ZA000350	..GROMMET- OPTIONAL PART: BACG20ZA350 USED ON: 285T0022-44	101102	2
28	285T0179-47	..PANEL- SUPPLIER CODE: V89954	101102	2
30	285T0179-48	..CHASSIS ASSY- SUPPLIER CODE: V89954	101102	1
32	F22A27M22-40	...NUT-ANCHOR SUPPLIER CODE: V0217B OPTIONAL PART: A27M88-04 V62554	101102	12
32	A27M88-04	...NUT-ANCHOR SUPPLIER CODE: V62554 OPTIONAL PART: F22A27M22-40 V0217B	101102	12

MISSING ITEM NUMBERS NOT APPLICABLE

– ITEM NOT ILLUSTRATED

BOEING PROPRIETARY - Copyright © - Unpublished Work - See title page for details.

FIG ITEM	PART NUMBER	1 2 3 4 5 6 7 NOMENCLATURE	EFFECT FROM TO	UNITS PER ASSY
70				
		ATTACHING PARTS		
- 34	BACR15BA2AD	...RIVET-	101102	24
		SIZE DETERMINED ON INSTL.		
		-------*-------		
36	285T0179-24	...CHASSIS-	101102	1
		SUPPLIER CODE:		
		V89954		
38	285T0179-43	..PANEL ASSY-FRONT	101102	1
		SUPPLIER CODE:		
		V89954		
39	SF6G6CBB5D	...NUT	101102	3
		SUPPLIER CODE:		
		V12324		
		SPECIFICATION NUMBER:		
		BACN10PA06-6		
40	D1400-6A1	...STUD ASSY	101102	4
		SUPPLIER CODE:		
		V08524		
		SPECIFICATION NUMBER:		
		BACS21DD1		
41	F19716-06	...NUT-ANCHOR	101102	4
		SUPPLIER CODE:		
		V15653		
		ATTACHING PARTS		
- 42	BACR15BA2AD	...RIVET-	101102	8
		SIZE DETERMINED ON INSTL.		
		-------*-------		
43	285T0179-45	...SPACER-	101102	4
		SUPPLIER CODE:		
		V89954		
44	285T0179-44	...PANEL-	101102	1
		SUPPLIER CODE:		
		V89954		
45	285T0557-1	.PANEL ASSY-DUAL ADF CONT	101102	1
		SUPPLIER CODE:		
		V89954		
		ELECTRICAL EQUIP NUMBER:		
		M01046		
		COMPONENT MAINT MANUAL REF:		
		34-57-62		
		FOR OTHER SYS DETAILS SEE:		
		11-31-05-65J		
		33-13-01-12		
		34-57-02-03		

MISSING ITEM NUMBERS NOT APPLICABLE

- ITEM NOT ILLUSTRATED

BOEING PROPRIETARY - Copyright © - Unpublished Work - See title page for details.

FIG ITEM	PART NUMBER	1 2 3 4 5 6 7 NOMENCLATURE	EFFECT FROM TO	UNITS PER ASSY
70				
46	BAC27TEX3471	..MARKER- SUPPLIER CODE: V89954 QUALIFIED OPTIONAL DATA: BAC27TEX3471 IS OPT TO BAC27TEX4182 WHEN USED WITH ASSOCIATED PARTS	101102	1
47	BAC27TEX4182	..MARKER- SUPPLIER CODE: V89954 QUALIFIED OPTIONAL DATA: BAC27TEX3471 IS OPT TO BAC27TEX4182 WHEN USED WITH ASSOCIATED PARTS	101102	1
50	NAS1801-04-5	..SCREW	101102	12
53	NAS514P440-4P	..SCREW	101102	4
57	NAS514P440-5P	..SCREW	101102	10
60	MS35206-202	..SCREW	101102	4
63	MS35338-40	..WASHER	101102	8
69	AN960-4L	..WASHER	101102	8
75	WCS225-5	..SEAL ASSY-SHAFT SUPPLIER CODE: V51074 QUALIFIED OPTIONAL DATA: (OPT WCS225-9 WHEN USED WITH ASSOCIATED ITEMS)	101102	2
75	WCS225-9	..SEAL ASSY-SHAFT SUPPLIER CODE: V51074 QUALIFIED OPTIONAL DATA: (OPT WCS225-5 WHEN USED WITH ASSOCIATED ITEMS)	101102	2
78	285T0580-1	..GASKET- SUPPLIER CODE: V89954 OPTIONAL PART: 285T0580-2 V89954	101102	2
78	285T0580-2	..GASKET ASSY- SUPPLIER CODE: V89954 OPTIONAL PART: 285T0580-1 V89954	101102	2

MISSING ITEM NUMBERS NOT APPLICABLE

– ITEM NOT ILLUSTRATED

BOEING PROPRIETARY - Copyright © - Unpublished Work - See title page for details.

FIG ITEM	PART NUMBER	1 2 3 4 5 6 7 NOMENCLATURE	EFFECT FROM TO	UNITS PER ASSY
70				
81	285T1151-2	..GASKET-LCD SUPPLIER CODE: V89954 QUALIFIED OPTIONAL DATA: 285T1151-1 OPT TO 285T1151-2 WHEN USED WITH ASSOCIATED ITEMS	101102	2
81	285T1151-1	..GASKET- SUPPLIER CODE: V89954 QUALIFIED OPTIONAL DATA: 285T1151-1 OPT TO 285T1151-2 WHEN USED WITH ASSOCIATED ITEMS	101102	2
84	285T0549-2	..COVER ASSY- SUPPLIER CODE: V89954	101102	2
87	285T0548-6	..PANEL ASSY-FRONT SUPPLIER CODE: V89954	101102	1
89	BACS21DD1B	...STUD ASSY SUPPLIER CODE: V08524 SPECIFICATION NUMBER: BACS21DD1B	101102	4
92	SF6G6CBB5D	...NUT SUPPLIER CODE: V12324 SPECIFICATION NUMBER: BACN10PA06-6	101102	2
93	U256-1	...NUT-PRESS SUPPLIER CODE: V46384	101102	8
95	285T0548-16	...PANEL-FRONT SUPPLIER CODE: V89954	101102	1
98	285T0550-15	..PANEL ASSY-SIDE SUPPLIER CODE: V89954 OPTIONAL PART: 285T0550-3 V89954 285T0550-11 V89954	101102	1

MISSING ITEM NUMBERS NOT APPLICABLE

– ITEM NOT ILLUSTRATED

BOEING PROPRIETARY - Copyright © - Unpublished Work - See title page for details.

FIG ITEM	PART NUMBER	1 2 3 4 5 6 7 NOMENCLATURE	EFFECT FROM TO	UNITS PER ASSY
70				
98	285T0550-11	..PANEL ASSY-SIDE SUPPLIER CODE: V89954 OPTIONAL PART: 285T0550-3 V89954 285T0550-15 V89954	101102	1
98	285T0550-3	..PANEL ASSY-SIDE SUPPLIER CODE: V89954 OPTIONAL PART: 285T0550-11 V89954 285T0550-15 V89954	101102	1
101	285T0550-16	..PANEL ASSY-SIDE SUPPLIER CODE: V89954 OPTIONAL PART: 285T0550-4 V89954 285T0550-12 V89954	101102	1
101	285T0550-12	..PANEL ASSY-SIDE SUPPLIER CODE: V89954 OPTIONAL PART: 285T0550-4 V89954 285T0550-16 V89954	101102	1
101	285T0550-4	..PANEL ASSY-SIDE SUPPLIER CODE: V89954 OPTIONAL PART: 285T0550-12 V89954 285T0550-16 V89954	101102	1
104	FE0440EF	...NUT-PRESS SUPPLIER CODE: V46384	101102	2

MISSING ITEM NUMBERS NOT APPLICABLE

– ITEM NOT ILLUSTRATED

BOEING PROPRIETARY - Copyright © - Unpublished Work - See title page for details.

FIG ITEM	PART NUMBER	1 2 3 4 5 6 7 NOMENCLATURE	EFFECT FROM TO	UNITS PER ASSY
70				
107	FE0440EF	...NUT-PRESS SUPPLIER CODE: V46384 USED ON: 285T0550-11 285T0550-12 285T0550-15 285T0550-16	101102	4
107	FE0X440	...NUT-PRESS SUPPLIER CODE: V46384 USED ON: 285T0550-3 285T0550-4	101102	4
110	LAC440-1	...NUT-PRESS SUPPLIER CODE: V46384 USED ON: 285T0550-3 285T0550-4 285T0550-11 285T0550-12	101102	4
113	BACN10XR04	...NUTPLATE- USED ON: 285T0550-15 285T0550-16 ATTACHING PARTS	101102	4
- 116	BACR15BA2AD	...RIVET- SIZE DETERMINED ON INSTL. USED ON: 285T0550-15 285T0550-16 -------*-------	101102	8
119	F22A27M22-40	...NUT-ANCHOR SUPPLIER CODE: V0217B ATTACHING PARTS	101102	2
- 122	BACR15BA2AD	...RIVET- SIZE DETERMINED ON INSTL. -------*-------	101102	4
125	285T0550-19	...PANEL- SUPPLIER CODE: V89954 USED ON: 285T0550-15	101102	1

MISSING ITEM NUMBERS NOT APPLICABLE

- ITEM NOT ILLUSTRATED

BOEING PROPRIETARY - Copyright © - Unpublished Work - See title page for details.

FIG ITEM	PART NUMBER	1 2 3 4 5 6 7 NOMENCLATURE	EFFECT FROM TO	UNITS PER ASSY
70				
125	285T0550-7	...PANEL- SUPPLIER CODE: V89954 USED ON: 285T0550-3 285T0550-11	101102	1
128	285T0550-20	...PANEL- SUPPLIER CODE: V89954 USED ON: 285T0550-16	101102	1
128	285T0550-8	...PANEL- SUPPLIER CODE: V89954 USED ON: 285T0550-4 285T0550-12	101102	1
131	285T0546-3	..PANEL-REAR SUPPLIER CODE: V89954	101102	1
132	285T0561-1	..MODULE ASSY-ELECT. SUPPLIER CODE: V89954	101102	1
136	285T0569-1	...DEVICE ASSY-PROGRAMMED MEMORY SUPPLIER CODE: V89954	101102	2
138	BAC27TEX2007	....DECAL- OPTIONAL PART: WHB673-1D0X0D5 V85480	101102	1
138	WHB673-1D0X0D5	....DECAL- SUPPLIER CODE: V85480 OPTIONAL PART: BAC27TEX2007	101102	1

MISSING ITEM NUMBERS NOT APPLICABLE

– ITEM NOT ILLUSTRATED

BOEING PROPRIETARY - Copyright © - Unpublished Work - See title page for details.

FIG ITEM	PART NUMBER	1 2 3 4 5 6 7 NOMENCLATURE	EFFECT FROM TO	UNITS PER ASSY
70				
150	G6992-12	.PANEL ASSY-DUAL AIR TRAFFIC CONT TCAS II (CUSTOMER FURNISHED) SUPPLIER CODE: V99837 FUNCTIONAL DESCRIPTION: PROVIDES SELECTION OF A 4-DIGIT REPLY CODE FOR ONE OR TWO ATC/MODE S TRANSPONDER ENABLES TRANSPONDER AND TCAS TO BE SET TO TEST STANDBY TRANSPONDER ONLY FULL TCAS OR TRAFFIC ADVISORY ONLY MODE OF OPERATION ELECTRICAL EQUIP NUMBER: M10140 COMPONENT MAINT MANUAL REF: 34-50-22 FOR BREAKDOWN SEE: 34-53-02-02	101102	RF
155	BACP10U0037T	.PANEL ASSY	101102	2
160	233N6204-301	.PANEL ASSY-FIRE/OVERHEAT TEST SUPPLIER CODE: V89954 COMPONENT MAINT MANUAL REF: 26-11-52 QUALIFIED I/W DATA: THE 233N6204-301 PANEL ASSY IS I/W THE 233N6204-15 PANEL ASSY T/W THE S233T100-5508 LIGHTPLATE. FOR OTHER SYS DETAILS SEE: 26-11-02-01 26-17-51-06 26-12-51-03 33-13-01-12	101102	1

MISSING ITEM NUMBERS NOT APPLICABLE

— ITEM NOT ILLUSTRATED

BOEING PROPRIETARY - Copyright © - Unpublished Work - See title page for details.

FIG ITEM	PART NUMBER	1 2 3 4 5 6 7 NOMENCLATURE	EFFECT FROM TO	UNITS PER ASSY
70				
160	233T6204-301	.PANEL ASSY-FIRE/OVERHEAT TEST SUPPLIER CODE: V89954 COMPONENT MAINT MANUAL REF: 26-11-51 QUALIFIED I/W DATA: 233T6204-301 PANEL ASSY IS I/W 233T6204-13 PANEL ASSY T/W S233T100-538 LIGHTPLATE FOR OTHER SYS DETAILS SEE: 26-11-02-01 26-17-51-06 33-13-01-12	101102	1
- 165	233N6204-15	..PANEL ASSY- SUPPLIER CODE: V89954 ELECTRICAL EQUIP NUMBER: M10445 COMPONENT MAINT MANUAL REF: 26-11-52 QUALIFIED I/W DATA: THE 233N6204-301 PANEL ASSY IS I/W THE 233N6204-15 PANEL ASSY T/W THE S233T100-5508 LIGHTPLATE. USED ON: 233N6204-301 FOR OTHER SYS DETAILS SEE: 26-11-02-01 26-12-51-03 26-17-51-06 33-13-01-12	101102	RF
- 167	233T6204-13	..PANEL ASSY- SUPPLIER CODE: V89954 ELECTRICAL EQUIP NUMBER: M10445 COMPONENT MAINT MANUAL REF: 26-11-51 QUALIFIED I/W DATA: 233T6204-301 PANEL ASSY IS I/W 233T6204-13 PANEL ASSY T/W S233T100-538 LIGHTPLATE USED ON: 233T6204-301	101102	1

MISSING ITEM NUMBERS NOT APPLICABLE

- ITEM NOT ILLUSTRATED

BOEING PROPRIETARY - Copyright © - Unpublished Work - See title page for details.

	FIG ITEM	PART NUMBER	1 2 3 4 5 6 7 NOMENCLATURE	EFFECT FROM TO	UNITS PER ASSY
	70				
R	- 167	233T6204-16	..PANEL ASSY-	101102	1
R			SUPPLIER CODE:		
R			V89954		
R			ELECTRICAL EQUIP NUMBER:		
R			M10445		
R			COMPONENT MAINT MANUAL REF:		
R			26-11-51		
R			USED ON:		
R			233T6204-301		
	170	NAS514P632-5	...SCREW-	101102	3
			USED ON:		
			233N6204-15		
	173	NAS514P632-5	...SCREW-	101102	3
			USED ON:		
			233T6204-13		
	175	NAS1801-06-5	...SCREW-	101102	3
			OPTIONAL PART:		
			BACS12HN06-5		
			USED ON:		
			233N6204-15		
	175	BACS12HN06-5	...SCREW-	101102	3
			OPTIONAL PART:		
			NAS1801-06-5		
			USED ON:		
			233N6204-15		
	177	BACS12CK06U5	...SCREW-	101102	3
			USED ON:		
			233T6204-13		
	180	MS35338-41	...WASHER-	101102	3
			OPTIONAL PART:		
			BACW10EC06S		
			USED ON:		
			233N6204-15		
	180	BACW10EC06S	...WASHER-	101102	3
			OPTIONAL PART:		
			MS35338-41		
			USED ON:		
			233N6204-15		
	183	BACW10EC06CD	...WASHER-	101102	3
			USED ON:		
			233T6204-13		
	185	69B46200-14	...STANDOFF-	101102	3
			USED ON:		
			233N6204-15		
	187	69B46200-11	...STANDOFF-	101102	3
			USED ON:		
			233T6204-13		

MISSING ITEM NUMBERS NOT APPLICABLE

– ITEM NOT ILLUSTRATED

BOEING PROPRIETARY - Copyright © - Unpublished Work - See title page for details.

FIG ITEM	PART NUMBER	1 2 3 4 5 6 7 NOMENCLATURE	EFFECT FROM TO	UNITS PER ASSY
70				
190	233N3250-40	...BRACKET-SPRT USED ON: 233N6204-15	101102	1
193	233T6200-64	...BRACKET-SPRT USED ON: 233T6204-13	101102	1
195	233N6204-11	...BASEPLATE ASSY- SUPPLIER CODE: V89954 USED ON: 233N6204-15	101102	1
197	233T6204-10	...BASEPLATE ASSY- SUPPLIER CODE: V89954 USED ON: 233T6204-13	101102	1
200	PFSC35-38ASEMB	....STUD ASSY- SUPPLIER CODE: V72794 SPECIFICATION NUMBER: BACS21DX1B USED ON: 233N6204-11	101102	4
202	BACS21DD1B	....STUD ASSY- SUPPLIER CODE: V08524 SPECIFICATION NUMBER: BACS21DD1B USED ON: 233T6204-10	101102	4
205	SF6G6CBB5D	....NUT- SUPPLIER CODE: V12324 SPECIFICATION NUMBER: BACN10PA06-6 USED ON: 233N6204-11	101102	2
207	SF6G6CBB5D	....NUT- SUPPLIER CODE: V12324 SPECIFICATION NUMBER: BACN10PA06-6 USED ON: 233T6204-10	101102	2
210	233N6204-12	....BASEPLATE- SUPPLIER CODE: V89954 USED ON: 233N6204-11	101102	1

MISSING ITEM NUMBERS NOT APPLICABLE

– ITEM NOT ILLUSTRATED

BOEING PROPRIETARY - Copyright © - Unpublished Work - See title page for details.

FIG ITEM	PART NUMBER	1 2 3 4 5 6 7 NOMENCLATURE	EFFECT FROM TO	UNITS PER ASSY
70				
213	BACP10U0187	....BASEPLATE-	101102	1
		USED ON:		
		233T6204-10		
215	233N6205-12	.PANEL ASSY-ENG FIRE CONT	101102	1
		SUPPLIER CODE:		
		V89954		
		ELECTRICAL EQUIP NUMBER:		
		M10443		
		COMPONENT MAINT MANUAL REF:		
		26-15-41		
		FOR OTHER SYS DETAILS SEE:		
		26-11-54-02A		
		26-21-01-02		
225	NAS514P632-5	..SCREW	101102	3
230	NAS1801-06-5	..SCREW	101102	3
235	233N3250-61	..BRACKET-SPRT	101102	1
240	233N6205-16	..BRACKET ASSY-	101102	1
		SUPPLIER CODE:		
		V89954		
		ATTACHING PARTS		
- 245	NAS1801-04-4	..SCREW	101102	6
		-------*-------		
250	BACG20ZA0208	...GROMMET	101102	2
255	69B46200-29	..STANDOFF-SPRT	101102	1
260	233N6205-17	..STANDOFF-SPRT	101102	2
		SUPPLIER CODE:		
		V89954		
265	233N6205-13	..BASEPLATE ASSY-	101102	1
		SUPPLIER CODE:		
		V89954		
270	SF6GXBAS8D	...PIN-	101102	2
		SUPPLIER CODE:		
		V12324		
330	BACP10U0450T	.PANEL ASSY	101102	1
335	BACP10U0262T	.PANEL	101102	1

MISSING ITEM NUMBERS NOT APPLICABLE

- ITEM NOT ILLUSTRATED

BOEING PROPRIETARY - Copyright © - Unpublished Work - See title page for details.

	FIG ITEM	PART NUMBER	1 2 3 4 5 6 7 NOMENCLATURE	EFFECT FROM TO	UNITS PER ASSY
	70				
	340	362-021-002	.INDICATOR ASSY-RUD TRIM	101102	1
			SUPPLIER CODE:		
			V26055		
			FUNCTIONAL DESCRIPTION:		
			DISPLAYS RUDDER TRIM		
			POSITION AS NOSE LEFT		
			AND RIGHT UNITS		
			SPECIFICATION NUMBER:		
			S231T282-2		
			ELECTRICAL EQUIP NUMBER:		
			N00083		
			COMPONENT MAINT MANUAL REF:		
			27-20-01		
			FOR BREAKDOWN SEE:		
			27-28-02-01A		
R	345	233T6201-324	.PANEL ASSY-AIL. RUD TRIM	101102	1
R			CONT		
R			SUPPLIER CODE:		
R			V89954		
R			FUNCTIONAL DESCRIPTION:		
R			CONTROLS AILERON RUDDER		
R			TRIM AND DISPLAYS TRIM		
R			ANGLE.		
R			COMPONENT MAINT MANUAL REF:		
R			27-21-63		
R			QUALIFIED I/W DATA:		
R			THE 233T6201-324 PANEL		
R			ASSY IS I/W THE		
R			233T6201-21 PANEL ASSY		
R			T/W THE S233T100-528		
R			LIGHTPLATE AND SA808-101		
R			KNOB		
R			FOR OTHER SYS DETAILS SEE:		
R			27-21-23-03		
R			33-13-01-12		
	- 350	233T6201-21	..PANEL ASSY-	101102	1
			SUPPLIER CODE:		
			V89954		
			ELECTRICAL EQUIP NUMBER:		
			M00074		
			COMPONENT MAINT MANUAL REF:		
			27-21-63		
			QUALIFIED I/W DATA:		
			THE 233T6201-324 PANEL		
			ASSY IS I/W THE		
			233T6201-21 PANEL ASSY		
			T/W THE S233T100-528		
			LIGHTPLATE AND SA808-101		
			KNOB		

MISSING ITEM NUMBERS NOT APPLICABLE

– ITEM NOT ILLUSTRATED

BOEING PROPRIETARY - Copyright © - Unpublished Work - See title page for details.

FIG ITEM	PART NUMBER	1 2 3 4 5 6 7 NOMENCLATURE	EFFECT FROM TO	UNITS PER ASSY
70				
355	NAS514P632-5	...SCREW	101102	7
360	NAS1801-06-5	...SCREW	101102	3
365	MS35338-41	...WASHER	101102	3
370	233T6200-38	...BRACKET-SPRT	101102	1
375	69B46200-7	...STANDOFF	101102	3
380	233T6201-20	...SHROUD ASSY-	101102	1
		SUPPLIER CODE:		
		V89954		
382	MF6001-06	....NUTPLATE	101102	4
		SUPPLIER CODE:		
		V15653		
		SPECIFICATION NUMBER:		
		BACN10KJ06CM		
		ATTACHING PARTS		
- 383	BACR15BB3AD	....RIVET-	101102	8
		SIZE DETERMINED ON INSTL.		
		-------*-------		
385	233T6201-15	...BASEPLATE ASSY-	101102	1
		SUPPLIER CODE:		
		V89954		
390	BACS21DD1B	....STUD ASSY	101102	4
		SUPPLIER CODE:		
		V08524		
		SPECIFICATION NUMBER:		
		BACS21DD1B		
395	SF6G6CBB5D	....NUT	101102	3
		SUPPLIER CODE:		
		V12324		
		SPECIFICATION NUMBER:		
		BACN10PA06-6		
400	233T6201-16	....BASEPLATE-	101102	1
		SUPPLIER CODE:		
		V89954		
405	233N6203-301	.PANEL ASSY-APU/CARGO FIRE	101102	1
		CONT		
		SUPPLIER CODE:		
		V89954		
		COMPONENT MAINT MANUAL REF:		
		26-15-51		
		PRE ALERT SB:		
		33A0044		
		FOR OTHER SYS DETAILS SEE:		
		26-22-03-03		
		26-23-52-04A		
		33-13-01-12		

MISSING ITEM NUMBERS NOT APPLICABLE

- ITEM NOT ILLUSTRATED

BOEING PROPRIETARY - Copyright © - Unpublished Work - See title page for details.

FIG ITEM	PART NUMBER	1 2 3 4 5 6 7 NOMENCLATURE	EFFECT FROM TO	UNITS PER ASSY
70				
405	233N6203-355	.PANEL ASSY-APU/CARGO FIRE CONT SUPPLIER CODE: V89954 FOR OTHER SYS DETAILS SEE: 26-22-03-03 26-23-52-04A 33-13-01-12	101102	1
405	233N6203-1301	.PANEL ASSY-APU/CARGO FIRE CONT SUPPLIER CODE: V89954 COMPONENT MAINT MANUAL REF: 26-15-51 POST ALERT SB: 33A0044 FOR OTHER SYS DETAILS SEE: 26-22-03-03 26-23-52-04A 33-13-01-12	101102	1
- 410	233N6203-161	..PANEL ASSY- SUPPLIER CODE: V89954 ELECTRICAL EQUIP NUMBER: M10444 COMPONENT MAINT MANUAL REF: 26-15-51 QUALIFIED I/W DATA: THE 233N6203-301 PANEL ASSY IS I/W THE 233N6203-161 PANEL ASSY T/W THE S233T100-573 LIGHTPLATE. 233N6203-9/-23/-45/-104/-105/-161 ARE ALL INTERCHANGEABLE EXCEPT SUBJECT TO CUSTOMER PREFERENCE USED ON: 233N6203-301 PRE ALERT SB: 33A0044	101102	1
- 410	233N6203-252	..PANEL ASSY- SUPPLIER CODE: V89954 COMPONENT MAINT MANUAL REF: 26-15-51 USED ON: 233N6203-355	101102	RF

MISSING ITEM NUMBERS NOT APPLICABLE

- ITEM NOT ILLUSTRATED

BOEING PROPRIETARY - Copyright © - Unpublished Work - See title page for details.

FIG ITEM	PART NUMBER	1 2 3 4 5 6 7 NOMENCLATURE	EFFECT FROM TO	UNITS PER ASSY
70				
- 410	233N6203-1161	..PANEL ASSY- SUPPLIER CODE: V89954 ELECTRICAL EQUIP NUMBER: M10444 COMPONENT MAINT MANUAL REF: 26-15-51 USED ON: 233N6203-1301 POST ALERT SB: 33A0044	101102	1
415	NAS514P632-5	...SCREW- USED ON: 233N6203-161	101102	4
415	FH6C5TPKL12BN	...SCREW- SUPPLIER CODE: V12324 USED ON: 233N6203-252	101102	4
417	NAS1801-06-5	...SCREW- USED ON: 233N6203-161	101102	4
417	NAS1801-06-5	...SCREW- OPTIONAL PART: BACS12HN06-5 USED ON: 233N6203-252	101102	4
417	BACS12HN06-5	...SCREW- OPTIONAL PART: NAS1801-06-5 USED ON: 233N6203-252	101102	4
420	MS35338-41	...WASHER- USED ON: 233N6203-161	101102	4
420	BACW10EC06S	...WASHER- USED ON: 233N6203-252	101102	4
425	69B46200-15	...STANDOFF	101102	4
430	233N6203-2	...BASEPLATE ASSY- SUPPLIER CODE: V89954	101102	1
R 435	PFSC35-38ASEMB	....STUD ASSY SUPPLIER CODE: V72794 SPECIFICATION NUMBER: BACS21DX1B	101102	4

MISSING ITEM NUMBERS NOT APPLICABLE

– ITEM NOT ILLUSTRATED

BOEING PROPRIETARY - Copyright © - Unpublished Work - See title page for details.

FIG ITEM	PART NUMBER	1 2 3 4 5 6 7 NOMENCLATURE	EFFECT FROM TO	UNITS PER ASSY
70				
440	233N6203-3	....BASEPLATE- SUPPLIER CODE: V89954 ATTACHING PARTS	101102	1
445	SF6G6CBB5D	....NUT SUPPLIER CODE: V12324 SPECIFICATION NUMBER: BACN10PA06-6 -------*-------	101102	3
447	233N6203-6	...BRACKET ASSY- SUPPLIER CODE: V89954	101102	RF
450	8055515-4506	.PRINTER-MULTI-INPUT (CUSTOMER FURNISHED) SUPPLIER CODE: V97896 ELECTRICAL EQUIP NUMBER: M10386 COMPONENT MAINT MANUAL REF: 31-35-22 FOR BREAKDOWN SEE: 23-22-03-01	101102	RF
475	285T0553-4	.PANEL ASSY-ILS CONT SYS CONT SUPPLIER CODE: V89954 ELECTRICAL EQUIP NUMBER: M00087 COMPONENT MAINT MANUAL REF: 34-31-61 FOR OTHER SYS DETAILS SEE: 11-31-05-65J 33-13-01-12 34-31-02-02	101102	1
475	285T0553-1	.PANEL ASSY-ILS CONT SUPPLIER CODE: V89954 ELECTRICAL EQUIP NUMBER: M00087 COMPONENT MAINT MANUAL REF: 34-31-61 FOR OTHER SYS DETAILS SEE: 11-31-05-65J 33-13-01-12 34-31-02-02	101102	1

MISSING ITEM NUMBERS NOT APPLICABLE

– ITEM NOT ILLUSTRATED

BOEING PROPRIETARY - Copyright © - Unpublished Work - See title page for details.

FIG ITEM	PART NUMBER	1 2 3 4 5 6 7 NOMENCLATURE	EFFECT FROM TO	UNITS PER ASSY
70				
475	285T0553-2	.PANEL ASSY-ILS CONT SUPPLIER CODE: V89954 ELECTRICAL EQUIP NUMBER: M00087 COMPONENT MAINT MANUAL REF: 34-31-61 FOR OTHER SYS DETAILS SEE: 11-31-05-65J 33-13-01-12 34-31-02-02	101102	1
475	285T0553-3	.PANEL ASSY-ILS CONT SUPPLIER CODE: V89954 ELECTRICAL EQUIP NUMBER: M00087 FOR OTHER SYS DETAILS SEE: 11-31-05-65J 33-13-01-12 34-31-02-02	101102	1
477	BAC27TEX3465	..MARKER-ALUMINUM FOIL SUPPLIER CODE: V89954 QUALIFIED OPTIONAL DATA: BAC27TEX3465 OR BAC27TEX4173 OR BAC27TEX4812 ARE ALL OPT WHEN USED WITH ASSOCIATED ITEMS USED ON: 285T0553-4	101102	1
477	BAC27TEX3465	..MARKER-ALUMINUM FOIL SUPPLIER CODE: V89954 USED ON: 285T0553-1 285T0553-2 285T0553-3	101102	1
479	BAC27TEX4173	..MARKER-ALUMINUM FOIL SUPPLIER CODE: V89954 QUALIFIED OPTIONAL DATA: BAC27TEX3465 OR BAC27TEX4173 OR BAC27TEX4812 ARE ALL OPT WHEN USED WITH ASSOCIATED ITEMS USED ON: 285T0553-4	101102	1

MISSING ITEM NUMBERS NOT APPLICABLE

– ITEM NOT ILLUSTRATED

BOEING PROPRIETARY - Copyright © - Unpublished Work - See title page for details.

FIG ITEM	PART NUMBER	1 2 3 4 5 6 7 NOMENCLATURE	EFFECT FROM TO	UNITS PER ASSY
70				
481	BAC27TEX4812	..MARKER-ALUMINUM FOIL SUPPLIER CODE: V89954 QUALIFIED OPTIONAL DATA: BAC27TEX3465 OR BAC27TEX4173 OR BAC27TEX4812 ARE ALL OPT WHEN USED WITH ASSOCIATED ITEMS USED ON: 285T0553-4	101102	1
483	MS35206-202	..SCREW	101102	4
485	NAS514P440-4P	..SCREW	101102	4
487	NAS514P440-5P	..SCREW	101102	12
489	NAS1801-04-5	..SCREW	101102	12
491	MS35338-40	..WASHER	101102	8
493	AN960-4L	..WASHER	101102	8
495	WCS225-7	..SEAL ASSY-SHAFT SUPPLIER CODE: V51074	101102	2
497	285T0580-1	..GASKET-LCD MODULE SUPPLIER CODE: V89954 QUALIFIED OPTIONAL DATA: 285T0580-1 OPT TO 285T0580-2 WHEN USED WITH ASSOCIATED ITEMS USED ON: 285T0553-4	101102	2
497	285T0580-1	..GASKET-LCD MODULE SUPPLIER CODE: V89954 USED ON: 285T0553-1 285T0553-2 285T0553-3	101102	2
497	285T0580-2	..GASKET ASSY-LCD MODULE SUPPLIER CODE: V89954 QUALIFIED OPTIONAL DATA: 285T0580-1 OPT TO 285T0580-2 WHEN USED WITH ASSOCIATED ITEMS USED ON: 285T0553-4	101102	2

MISSING ITEM NUMBERS NOT APPLICABLE

– ITEM NOT ILLUSTRATED

BOEING PROPRIETARY - Copyright © - Unpublished Work - See title page for details.

FIG ITEM	PART NUMBER	1 2 3 4 5 6 7 NOMENCLATURE	EFFECT FROM TO	UNITS PER ASSY
70				
499	285T1151-1	..GASKET-	101102	2
		SUPPLIER CODE:		
		V89954		
		QUALIFIED OPTIONAL DATA:		
		285T1151-1 OPT TO		
		285T1151-2 WHEN USED		
		WITH ASSOCIATED ITEMS		
		USED ON:		
		285T0553-4		
499	285T1151-2	..GASKET-	101102	2
		SUPPLIER CODE:		
		V89954		
		QUALIFIED OPTIONAL DATA:		
		285T1151-1 OPT TO		
		285T1151-2 WHEN USED		
		WITH ASSOCIATED ITEMS		
		USED ON:		
		285T0553-4		
501	285T0549-1	..COVER ASSY-	101102	2
		SUPPLIER CODE:		
		V89954		
503	285T0548-1	..PANEL ASSY-FRONT	101102	1
		SUPPLIER CODE:		
		V89954		
505	BACS21DD1B	...STUD ASSY	101102	4
		SUPPLIER CODE:		
		V08524		
		SPECIFICATION NUMBER:		
		BACS21DD1B		
507	SF6G6CBB5D	...NUT	101102	2
		SUPPLIER CODE:		
		V12324		
		SPECIFICATION NUMBER:		
		BACN10PA06-6		
509	U256-1	...NUT-PRESS	101102	8
		SUPPLIER CODE:		
		V46384		
511	285T0548-11	...PANEL-	101102	1
		SUPPLIER CODE:		
		V89954		
513	285T0550-9	..PANEL ASSY-SIDE	101102	1
		SUPPLIER CODE:		
		V89954		
		OPTIONAL PART:		
		285T0550-1		
		V89954		
		285T0550-13		
		V89954		

MISSING ITEM NUMBERS NOT APPLICABLE

– ITEM NOT ILLUSTRATED

BOEING PROPRIETARY - Copyright © - Unpublished Work - See title page for details.

FIG ITEM	PART NUMBER	1 2 3 4 5 6 7 NOMENCLATURE	EFFECT FROM TO	UNITS PER ASSY
70				
513	285T0550-1	..PANEL ASSY-SIDE SUPPLIER CODE: V89954 OPTIONAL PART: 285T0550-9 V89954 285T0550-13 V89954	101102	1
513	285T0550-13	..PANEL ASSY-SIDE SUPPLIER CODE: V89954 OPTIONAL PART: 285T0550-1 V89954 285T0550-9 V89954	101102	1
515	285T0550-2	..PANEL ASSY-SIDE SUPPLIER CODE: V89954 OPTIONAL PART: 285T0550-10 V89954 285T0550-14 V89954	101102	1
515	285T0550-10	..PANEL ASSY-SIDE SUPPLIER CODE: V89954 OPTIONAL PART: 285T0550-2 V89954 285T0550-14 V89954	101102	1
515	285T0550-14	..PANEL ASSY-SIDE SUPPLIER CODE: V89954 OPTIONAL PART: 285T0550-2 V89954 285T0550-10 V89954	101102	1
517	FE0440EF	...NUT-PRESS SUPPLIER CODE: V46384	101102	2

MISSING ITEM NUMBERS NOT APPLICABLE

— ITEM NOT ILLUSTRATED

BOEING PROPRIETARY - Copyright © - Unpublished Work - See title page for details.

FIG ITEM	PART NUMBER	1 2 3 4 5 6 7 NOMENCLATURE	EFFECT FROM TO	UNITS PER ASSY
70				
519	FE0440EF	...NUT-PRESS SUPPLIER CODE: V46384 USED ON: 285T0550-9 285T0550-13 285T0550-10 285T0550-14	101102	4
519	FE0X440	...NUT-PRESS SUPPLIER CODE: V46384 USED ON: 285T0550-1 285T0550-2	101102	4
521	LAC440-1	...NUT-PRESS SUPPLIER CODE: V46384 USED ON: 285T0550-1 285T0550-9 285T0550-2 285T0550-10	101102	4
523	BACN10XR04	...NUTPLATE- USED ON: 285T0550-13 285T0550-14 ATTACHING PARTS	101102	4
- 525	BACR15BA2AD	...RIVET- SIZE DETERMINED ON INSTL. -------*-------	101102	8
527	F22A27M22-40	...NUT-ANCHOR SUPPLIER CODE: V0217B ATTACHING PARTS	101102	2
- 529	BACR15BA2AD	...RIVET- SIZE DETERMINED ON INSTL. -------*-------	101102	4
531	285T0550-5	...PANEL- SUPPLIER CODE: V89954 USED ON: 285T0550-1 285T0550-9	101102	1
531	285T0550-17	...PANEL- SUPPLIER CODE: V89954 USED ON: 285T0550-13	101102	1

MISSING ITEM NUMBERS NOT APPLICABLE

- ITEM NOT ILLUSTRATED

BOEING PROPRIETARY - Copyright © - Unpublished Work - See title page for details.

FIG ITEM	PART NUMBER	1 2 3 4 5 6 7 NOMENCLATURE	EFFECT FROM TO	UNITS PER ASSY
70				
533	285T0550-6	...PANEL- SUPPLIER CODE: V89954 USED ON: 285T0550-2 285T0550-10	101102	1
533	285T0550-18	...PANEL- SUPPLIER CODE: V89954 USED ON: 285T0550-14	101102	1
535	285T0558-3	..MODULE ASSY-ELECT. SUPPLIER CODE: V89954 QUALIFIED OPTIONAL DATA: 285T0558-3 OPT TO 285T0558-10 WHEN USED WITH ASSOCIATED ITEMS USED ON: 285T0553-4	101102	1
535	285T0558-10	..MODULE ASSY-ELECT. SUPPLIER CODE: V89954 QUALIFIED OPTIONAL DATA: 285T0558-3 OPT TO 285T0558-10 WHEN USED WITH ASSOCIATED ITEMS USED ON: 285T0553-4	101102	1
535	285T0558-1	..MODULE ASSY-ELECT. SUPPLIER CODE: V89954 USED ON: 285T0553-4	101102	1
535	285T0558-2	..MODULE ASSY-ELECT. SUPPLIER CODE: V89954 USED ON: 285T0553-4	101102	1
535	285T0558-1	..MODULE ASSY-ELECT. SUPPLIER CODE: V89954 USED ON: 285T0553-1 285T0553-3	101102	1

MISSING ITEM NUMBERS NOT APPLICABLE

– ITEM NOT ILLUSTRATED

BOEING PROPRIETARY - Copyright © - Unpublished Work - See title page for details.

FIG ITEM	PART NUMBER	1 2 3 4 5 6 7 NOMENCLATURE	EFFECT FROM TO	UNITS PER ASSY
70				
535	285T0558-2	..MODULE ASSY-ELECT. SUPPLIER CODE: V89954 QUALIFIED OPTIONAL DATA: 285T0558-2 OPT TO 285T0558-9 WHEN USED WITH ASSOCIATED ITEMS USED ON: 285T0553-2	101102	1
535	285T0558-9	..MODULE ASSY-ELECT. SUPPLIER CODE: V89954 QUALIFIED OPTIONAL DATA: 285T0558-2 OPT TO 285T0558-9 WHEN USED WITH ASSOCIATED ITEMS USED ON: 285T0553-2	101102	1
535	285T0558-1	..MODULE ASSY-ELECT. SUPPLIER CODE: V89954 USED ON: 285T0553-2	101102	1
537	285T0566-1	...PMD ASSY- SUPPLIER CODE: V89954	101102	3
539	BAC27TEX2007	....DECAL- OPTIONAL PART: WHB673-1-0X0-5 V85480 DAT59-652 V85480	101102	1
539	WHB673-1-0X0-5	....DECAL- SUPPLIER CODE: V85480 OPTIONAL PART: BAC27TEX2007 DAT59-652 V85480	101102	1
539	DAT59-652	....DECAL- SUPPLIER CODE: V85480 OPTIONAL PART: BAC27TEX2007 WHB673-1-0X0-5 V85480	101102	1
541	285T0546-1	..PANEL-REAR SUPPLIER CODE: V89954	101102	1

MISSING ITEM NUMBERS NOT APPLICABLE

– ITEM NOT ILLUSTRATED

BOEING PROPRIETARY - Copyright © - Unpublished Work - See title page for details.

FIG ITEM	PART NUMBER	1 2 3 4 5 6 7 NOMENCLATURE	EFFECT FROM TO	UNITS PER ASSY
70				
546	285T0020-8	.PANEL ASSY-ILS CONT	101102	1
		SUPPLIER CODE:		
		V89954		
		ELECTRICAL EQUIP NUMBER:		
		M00087		
		COMPONENT MAINT MANUAL REF:		
		34-31-51		
		FOR OTHER SYS DETAILS SEE:		
		11-31-05-65J		
		33-13-01-12		
		34-31-02-02		
548	BAC27TEX0934	..MARKER-ALUMINUM FOIL	101102	1
		SUPPLIER CODE:		
		V89954		
550	NAS514P440-4P	..SCREW	101102	10
552	NAS514P440-5P	..SCREW	101102	6
554	S233-2	..SEAL-	101102	1
		SUPPLIER CODE:		
		V51896		
		OPTIONAL PART:		
		S233-9		
		V51896		
554	S233-9	..SEAL-	101102	1
		SUPPLIER CODE:		
		V51896		
		OPTIONAL PART:		
		S233-2		
		V51896		
556	285T0082-10	..MODULE ASSY-FRONT	101102	1
		SUPPLIER CODE:		
		V89954		
		OPTIONAL PART:		
		285T0082-14		
		V89954		
556	285T0082-14	..MODULE ASSY-FRONT	101102	1
		SUPPLIER CODE:		
		V89954		
		OPTIONAL PART:		
		285T0082-10		
		V89954		
558	MS35206-202	...SCREW	101102	4
560	WCS225-3	...SEAL ASSY-	101102	2
		SUPPLIER CODE:		
		V51074		
		OPTIONAL PART:		
		WCS225-7		
		V51074		

MISSING ITEM NUMBERS NOT APPLICABLE

– ITEM NOT ILLUSTRATED

BOEING PROPRIETARY - Copyright © - Unpublished Work - See title page for details.

FIG ITEM	PART NUMBER	1 2 3 4 5 6 7 NOMENCLATURE	EFFECT FROM TO	UNITS PER ASSY
70				
560	WCS225-7	...SEAL ASSY-	101102	2
		SUPPLIER CODE:		
		V51074		
		OPTIONAL PART:		
		WCS225-3		
		V51074		
562	285T0440-1	...PANEL ASSY-	101102	1
		SUPPLIER CODE:		
		V89954		
		USED ON:		
		285T0082-10		
562	285T0440-22	...PANEL ASSY-	101102	1
		SUPPLIER CODE:		
		V89954		
		USED ON:		
		285T0082-14		
564	NAS514P440-5P	....SCREW	101102	2
566	BACS21DD1B	....STUD ASSY	101102	4
		SUPPLIER CODE:		
		V08524		
		SPECIFICATION NUMBER:		
		BACS21DD1B		
568	92-1660-40	....NUT	101102	2
		SUPPLIER CODE:		
		V72962		
		SPECIFICATION NUMBER:		
		BACN10DN40		
		OPTIONAL PART:		
		92-1660-440		
		V15653		
570	SF6G6CBB5D	....NUT	101102	4
		SUPPLIER CODE:		
		V12324		
		SPECIFICATION NUMBER:		
		BACN10PA06-6		
572	285T0440-5	....PANEL-	101102	1
		SUPPLIER CODE:		
		V89954		
		USED ON:		
		285T0440-1		
572	285T0440-23	....PANEL-	101102	1
		SUPPLIER CODE:		
		V89954		
		USED ON:		
		285T0440-22		
574	285T0438-1	....CHASSIS ASSY-UPR	101102	1
		SUPPLIER CODE:		
		V89954		

MISSING ITEM NUMBERS NOT APPLICABLE

– ITEM NOT ILLUSTRATED

BOEING PROPRIETARY - Copyright © - Unpublished Work - See title page for details.

FIG ITEM	PART NUMBER	1 2 3 4 5 6 7 NOMENCLATURE	EFFECT FROM TO	UNITS PER ASSY
70				
576	F22A27M22-40	.....NUT-ANCHOR SUPPLIER CODE: V0217B ATTACHING PARTS	101102	2
- 578	BACR15BA2AD	.....RIVET- SIZE DETERMINED ON INSTL. -------*-------	101102	4
580	285T0439-3	..PANEL-SIDE SUPPLIER CODE: V89954	101102	1
582	285T0439-4	..PANEL-SIDE SUPPLIER CODE: V89954	101102	1
584	285T0081-10	..MODULE ASSY-REAR SUPPLIER CODE: V89954	101102	1
586	285T0250-4	...PMD ASSY- SUPPLIER CODE: V89954	101102	3
588	BAC27TEX2007	....DECAL- OPTIONAL PART: WHB673-1D0X0D5 V85480	101102	1
588	WHB673-1D0X0D5	....DECAL- SUPPLIER CODE: V85480 OPTIONAL PART: BAC27TEX2007	101102	1
590	NAS514P440-4P	...SCREW	101102	1
592	NAS514P440-7P	...SCREW	101102	1
594	NAS43DD0-8	...SPACER	101102	1
596	8214B0440HL	...SPACER-THREADED SUPPLIER CODE: V06540	101102	1
598	NAS620-4L	...WASHER	101102	1
600	285T0439-1	...CHASSIS ASSY- SUPPLIER CODE: V89954	101102	1
602	NAS1801-04-5	....SCREW	101102	1
604	AN960D4L	....WASHER	101102	3
606	F22A27M22-40	....NUT-ANCHOR SUPPLIER CODE: V0217B ATTACHING PARTS	101102	4
- 608	BACR15BB2AD	....RIVET- SIZE DETERMINED ON INSTL. -------*-------	101102	8

MISSING ITEM NUMBERS NOT APPLICABLE

- ITEM NOT ILLUSTRATED

BOEING PROPRIETARY - Copyright © - Unpublished Work - See title page for details.

FIG ITEM	PART NUMBER	1 2 3 4 5 6 7 NOMENCLATURE	EFFECT FROM TO	UNITS PER ASSY
70				
610	285T0439-6	....BRACKET ASSY- SUPPLIER CODE: V89954	101102	1
612	285T0439-2	....SUPPORT ASSY- SUPPLIER CODE: V89954 ATTACHING PARTS	101102	1
- 614	BACR15BA3AD	....RIVET- SIZE DETERMINED ON INSTL. -------*-------	101102	5
616	RMF9201M40	.....NUTPLATE SUPPLIER CODE: V72962 SPECIFICATION NUMBER: BACN10JN04 OPTIONAL PART: BRFM20A04L V52828 MF1000-04BAC V15653 NS103218-40 V80539 MF53049-04 V15653 T8124S04S V11815 VN252A40L V92215	101102	3
618	T8077S440	.....NUTPLATE SUPPLIER CODE: V11815 SPECIFICATION NUMBER: BACN10JP04B OPTIONAL PART: MK2000-04BAC V15653 NS103198-40 V80539 RMA9207M40 V72962 VN201A1-40L V92215 BRM100A04L V52828 ATTACHING PARTS	101102	1
- 620	BACR15BA3AD	.....RIVET- SIZE DETERMINED ON INSTL. -------*-------	101102	8

MISSING ITEM NUMBERS NOT APPLICABLE

- ITEM NOT ILLUSTRATED

BOEING PROPRIETARY - Copyright © - Unpublished Work - See title page for details.

FIG ITEM	PART NUMBER	1 2 3 4 5 6 7 NOMENCLATURE	EFFECT FROM TO	UNITS PER ASSY
70				
622	285T0439-17	.....SUPPORT- SUPPLIER CODE: V89954	101102	1
624	285T0439-5	....CHASSIS- SUPPLIER CODE: V89954	101102	1
630	285T0524-6	.PANEL ASSY-ILS CONT SUPPLIER CODE: V89954 ELECTRICAL EQUIP NUMBER: M00087 COMPONENT MAINT MANUAL REF: 34-31-52 FOR OTHER SYS DETAILS SEE: 11-31-05-65J 33-13-01-12 34-31-02-02	101102	1
632	BAC27TEX2825	..MARKER-ALUMINUM FOIL SUPPLIER CODE: V89954	101102	1
634	MS35206-202	..SCREW	101102	4
636	NAS514P440-6P	..SCREW	101102	4
638	NAS1801-04-5	..SCREW	101102	2
640	AN960-4L	..WASHER	101102	2
642	92-1660-40	..NUT SUPPLIER CODE: V72962 SPECIFICATION NUMBER: BACN10DN40 OPTIONAL PART: 92-1660-440 V15653	101102	2
644	S233-13	..SEAL- SUPPLIER CODE: V51896 OPTIONAL PART: S233-6 V51896	101102	1
644	S233-6	..SEAL- SUPPLIER CODE: V51896 OPTIONAL PART: S233-13 V51896	101102	1
646	WCS225-7	..SEAL ASSY-SHAFT SUPPLIER CODE: V51074	101102	2

MISSING ITEM NUMBERS NOT APPLICABLE

– ITEM NOT ILLUSTRATED

BOEING PROPRIETARY - Copyright © - Unpublished Work - See title page for details.

FIG ITEM	PART NUMBER	1 2 3 4 5 6 7 NOMENCLATURE	EFFECT FROM TO	UNITS PER ASSY
70				
648	285T0525-3	..MODULE ASSY-ELECT. SUPPLIER CODE: V89954	101102	1
- 650	285T0525-4	...MODULE ASSY- SUPPLIER CODE: V89954	101102	1
652	285T0250-4	....PMD ASSY- SUPPLIER CODE: V89954	101102	3
654	BAC27TEX2007	.....DECAL- OPTIONAL PART: WHB673-1D0X0D5 V85480	101102	1
654	WHB673-1D0X0D5	.....DECAL- SUPPLIER CODE: V85480 OPTIONAL PART: BAC27TEX2007	101102	1
656	285T0530-1	..ENCLOSURE ASSY- SUPPLIER CODE: V89954 OPTIONAL PART: 285T0530-2 V89954	101102	1
656	285T0530-2	..ENCLOSURE ASSY- SUPPLIER CODE: V89954 OPTIONAL PART: 285T0530-1 V89954	101102	1
658	NAS1801-04-5	...SCREW	101102	4
660	NAS514P440-4P	...SCREW	101102	4
662	NAS514P440-5P	...SCREW	101102	12
664	AN960D4	...WASHER	101102	4
666	285T0529-1	...COVER ASSY-SHELL SUPPLIER CODE: V89954	101102	2
668	285T0528-1	...PANEL ASSY-FRONT SUPPLIER CODE: V89954 USED ON: 285T0530-1	101102	1
668	285T0528-3	...PANEL ASSY-FRONT SUPPLIER CODE: V89954 USED ON: 285T0530-2	101102	1

MISSING ITEM NUMBERS NOT APPLICABLE

- ITEM NOT ILLUSTRATED

BOEING PROPRIETARY - Copyright © - Unpublished Work - See title page for details.

FIG ITEM	PART NUMBER	1 2 3 4 5 6 7 NOMENCLATURE	EFFECT FROM TO	UNITS PER ASSY
70				
670	BACS21DD1B	....STUD ASSY SUPPLIER CODE: V08524 SPECIFICATION NUMBER: BACS21DD1B	101102	4
672	SF6G6CBB5D	....NUT SUPPLIER CODE: V12324 SPECIFICATION NUMBER: BACN10PA06-6	101102	4
674	285T0528-2	....PANEL- SUPPLIER CODE: V89954 USED ON: 285T0528-1	101102	1
674	285T0528-4	....PANEL- SUPPLIER CODE: V89954 USED ON: 285T0528-3	101102	1
676	285T0529-3	...PANEL ASSY-SIDE SUPPLIER CODE: V89954	101102	1
678	285T0529-4	...PANEL ASSY-SIDE SUPPLIER CODE: V89954	101102	1
680	RMF9201M40	....NUTPLATE SUPPLIER CODE: V72962 SPECIFICATION NUMBER: BACN10JN04 OPTIONAL PART: BRFM20A04L V52828 MF1000-04BAC V15653 NS103218-40 V80539 MF53049-04 V15653 T8124S04S V11815 VN252A40L V92215 ATTACHING PARTS	101102	4
- 682	BACR15BA3AD	....RIVET- SIZE DETERMINED ON INSTL. -------*-------	101102	8

MISSING ITEM NUMBERS NOT APPLICABLE

- ITEM NOT ILLUSTRATED

BOEING PROPRIETARY - Copyright © - Unpublished Work - See title page for details.

FIG ITEM	PART NUMBER	1 2 3 4 5 6 7 NOMENCLATURE	EFFECT FROM TO	UNITS PER ASSY
70				
684	F22A27M22-40	....NUT-ANCHOR SUPPLIER CODE: V0217B ATTACHING PARTS	101102	4
- 686	BACR15BA2AD	....RIVET- SIZE DETERMINED ON INSTL. -------*-------	101102	8
688	285T0529-5	....PANEL- SUPPLIER CODE: V89954 USED ON: 285T0529-3	101102	1
690	285T0529-6	....PANEL- SUPPLIER CODE: V89954 USED ON: 285T0529-4	101102	1
692	285T0527-1	...PANEL-REAR SUPPLIER CODE: V89954	101102	1
700	285T0537-1	.PANEL ASSY-ADF CONT SUPPLIER CODE: V89954 ELECTRICAL EQUIP NUMBER: M01046 COMPONENT MAINT MANUAL REF: 34-57-53 FOR OTHER SYS DETAILS SEE: 11-31-05-65J 33-13-01-12 34-57-02-03	101102	1
701	BAC27TEX3153	..MARKER- SUPPLIER CODE: V89954	101102	1
706	MS35206-202	..SCREW	101102	4
709	WCS225-5	..SEAL ASSY-SHAFT SUPPLIER CODE: V51074	101102	2
710	NAS1801-04-6	..SCREW	101102	3
711	AN960-4L	..WASHER	101102	3
712	S233-14	..SEAL- SUPPLIER CODE: V51896 OPTIONAL PART: S233-7 V51896	101102	1

MISSING ITEM NUMBERS NOT APPLICABLE

- ITEM NOT ILLUSTRATED

BOEING PROPRIETARY - Copyright © - Unpublished Work - See title page for details.

FIG ITEM	PART NUMBER	1 2 3 4 5 6 7 NOMENCLATURE	EFFECT FROM TO	UNITS PER ASSY
70				
712	S233-7	..SEAL-	101102	1
		SUPPLIER CODE:		
		V51896		
		OPTIONAL PART:		
		S233-14		
		V51896		
715	285T0450-4	..ENCLOSURE ASSY-	101102	1
		SUPPLIER CODE:		
		V89954		
		OPTIONAL PART:		
		285T0450-2		
		V89954		
715	285T0450-2	..ENCLOSURE ASSY-	101102	1
		SUPPLIER CODE:		
		V89954		
		OPTIONAL PART:		
		285T0450-4		
		V89954		
718	NAS1801-04-5	...SCREW	101102	4
721	NAS514P440-5P	...SCREW	101102	22
724	NAS514P440-7P	...SCREW	101102	1
727	285T0449-1	...COVER-UPR	101102	1
		SUPPLIER CODE:		
		V89954		
730	285T0449-9	...COVER ASSY-LWR	101102	1
		SUPPLIER CODE:		
		V89954		
733	285T0448-9	...PANEL ASSY-FRONT	101102	1
		SUPPLIER CODE:		
		V89954		
		USED ON:		
		285T0450-4		
733	285T0448-4	...PANEL ASSY-FRONT	101102	1
		SUPPLIER CODE:		
		V89954		
		USED ON:		
		285T0450-2		
736	BACS21DD1B	....STUD ASSY	101102	4
		SUPPLIER CODE:		
		V08524		
		SPECIFICATION NUMBER:		
		BACS21DD1B		
739	SF6G6CBB5D	....NUT	101102	5
		SUPPLIER CODE:		
		V12324		
		SPECIFICATION NUMBER:		
		BACN10PA06-6		

MISSING ITEM NUMBERS NOT APPLICABLE

– ITEM NOT ILLUSTRATED

BOEING PROPRIETARY - Copyright © - Unpublished Work - See title page for details.

FIG ITEM	PART NUMBER	1 2 3 4 5 6 7 NOMENCLATURE	EFFECT FROM TO	UNITS PER ASSY
70				
742	285T0451-1	....CLIP- SUPPLIER CODE: V89954 ATTACHING PARTS	101102	1
- 745	BACR15BA2AD	....RIVET- SIZE DETERMINED ON INSTL. -------*-------	101102	2
748	RMF9201M40	....NUTPLATE SUPPLIER CODE: V72962 SPECIFICATION NUMBER: BACN10JN04 OPTIONAL PART: BRFM20A04L V52828 MF1000-04BAC V15653 NS103218-40 V80539 MF53049-04 V15653 T8124S04S V11815 VN252A40L V92215 ATTACHING PARTS	101102	1
- 751	BACR15BA3AD	....RIVET- SIZE DETERMINED ON INSTL. -------*-------	101102	2
754	285T0448-10	....PANEL- SUPPLIER CODE: V89954 USED ON: 285T0448-9	101102	1
754	285T0448-5	....PANEL- SUPPLIER CODE: V89954 USED ON: 285T0448-4	101102	1
757	285T0449-4	...PANEL ASSY-SIDE SUPPLIER CODE: V89954	101102	1

MISSING ITEM NUMBERS NOT APPLICABLE

- ITEM NOT ILLUSTRATED

BOEING PROPRIETARY - Copyright © - Unpublished Work - See title page for details.

FIG ITEM	PART NUMBER	1 2 3 4 5 6 7 NOMENCLATURE	EFFECT FROM TO	UNITS PER ASSY
70				
760	RMF9201M40	....NUTPLATE SUPPLIER CODE: V72962 SPECIFICATION NUMBER: BACN10JN04 OPTIONAL PART: BRFM20A04L V52828 MF1000-04BAC V15653 NS103218-40 V80539 MF53049-04 V15653 T8124S04S V11815 VN252A40L V92215 ATTACHING PARTS	101102	6
- 763	BACR15BA3AD	....RIVET- SIZE DETERMINED ON INSTL. -------*-------	101102	12
766	F22A27M22-40	....NUT-ANCHOR SUPPLIER CODE: V0217B ATTACHING PARTS	101102	3
- 769	BACR15BA2AD	....RIVET- SIZE DETERMINED ON INSTL. -------*-------	101102	6
772	285T0447-5	....CLIP- SUPPLIER CODE: V89954	101102	1
775	285T0449-8	....PANEL- SUPPLIER CODE: V89954	101102	1
778	285T0449-11	...PANEL ASSY-SIDE SUPPLIER CODE: V89954	101102	1

MISSING ITEM NUMBERS NOT APPLICABLE

- ITEM NOT ILLUSTRATED

BOEING PROPRIETARY - Copyright © - Unpublished Work - See title page for details.

FIG ITEM	PART NUMBER	1 2 3 4 5 6 7 NOMENCLATURE	EFFECT FROM TO	UNITS PER ASSY
70				
781	RMF9201M40	....NUTPLATE SUPPLIER CODE: V72962 SPECIFICATION NUMBER: BACN10JN04 OPTIONAL PART: BRFM20A04L V52828 MF1000-04BAC V15653 NS103218-40 V80539 MF53049-04 V15653 T8124S04S V11815 VN252A40L V92215 ATTACHING PARTS	101102	5
- 784	BACR15BA3AD	....RIVET- SIZE DETERMINED ON INSTL. -------*-------	101102	10
787	F22A27M22-40	....NUT-ANCHOR SUPPLIER CODE: V0217B ATTACHING PARTS	101102	3
- 790	BACR15BA2AD	....RIVET- SIZE DETERMINED ON INSTL. -------*-------	101102	6
793	285T0447-5	....CLIP- SUPPLIER CODE: V89954	101102	1
796	285T0449-12	....PANEL- SUPPLIER CODE: V89954	101102	1
799	285T0447-1	...PANEL ASSY-REAR SUPPLIER CODE: V89954	101102	1
802	F22A27M22-40	....NUT-ANCHOR SUPPLIER CODE: V0217B ATTACHING PARTS	101102	3
- 805	BACR15BB2AD	....RIVET- SIZE DETERMINED ON INSTL. -------*-------	101102	6
808	285T0447-4	....CLIP- SUPPLIER CODE: V89954	101102	1

MISSING ITEM NUMBERS NOT APPLICABLE

- ITEM NOT ILLUSTRATED

BOEING PROPRIETARY - Copyright © - Unpublished Work - See title page for details.

FIG ITEM	PART NUMBER	1 2 3 4 5 6 7 NOMENCLATURE	EFFECT FROM TO	UNITS PER ASSY
70				
811	285T0447-3	....SPACER-	101102	1
		SUPPLIER CODE:		
		V89954		
814	285T0447-2	....PANEL-	101102	1
		SUPPLIER CODE:		
		V89954		
817	285T0446-1	...SUPPORT ASSY-PWR SUPPLY	101102	1
		SUPPLIER CODE:		
		V89954		
818	TC140	....PLATE-MTG	101102	1
		SUPPLIER CODE:		
		V59730		
		SPECIFICATION NUMBER:		
		STBP19M1		
		ATTACHING PARTS		
- 819	NAS600-6P	....SCREW	101102	1
		-------*-------		
820	TC140	....PLATE-MTG	101102	2
		SUPPLIER CODE:		
		V59730		
		SPECIFICATION NUMBER:		
		STBP19M1		
		ATTACHING PARTS		
- 823	MS20470A4-6	....RIVET	101102	2
		-------*-------		
826	F22A27M22-40	....NUT-ANCHOR	101102	1
		SUPPLIER CODE:		
		V0217B		
		ATTACHING PARTS		
- 829	BACR15BB2AD	....RIVET-	101102	2
		SIZE DETERMINED ON INSTL.		
		-------*-------		

MISSING ITEM NUMBERS NOT APPLICABLE

- ITEM NOT ILLUSTRATED

BOEING PROPRIETARY - Copyright © - Unpublished Work - See title page for details.

FIG ITEM	PART NUMBER	1 2 3 4 5 6 7 NOMENCLATURE	EFFECT FROM TO	UNITS PER ASSY
70				
831	RMF9201M40	....NUTPLATE SUPPLIER CODE: V72962 SPECIFICATION NUMBER: BACN10JN04 OPTIONAL PART: BRFM20A04L V52828 MF1000-04BAC V15653 NS103218-40 V80539 MF53049-04 V15653 T8124S04S V11815 VN252A40L V92215 ATTACHING PARTS	101102	8
- 834	BACR15BA3AD	....RIVET- SIZE DETERMINED ON INSTL. -------*-------	101102	16
837	285T0446-2	....BRACKET-SPRT SUPPLIER CODE: V89954	101102	1
840	285T0445-5	..MODULE ASSY-ELECT. SUPPLIER CODE: V89954	101102	1
- 843	285T0445-6	...MODULE ASSY- SUPPLIER CODE: V89954	101102	RF
846	285T0253-5	....PMD ASSY- SUPPLIER CODE: V89954	101102	2
849	BAC27TEX2007	.....DECAL- OPTIONAL PART: WHB673-10X05 V85480	101102	1
849	WHB673-10X05	.....DECAL- SUPPLIER CODE: V85480 OPTIONAL PART: BAC27TEX2007	101102	1

MISSING ITEM NUMBERS NOT APPLICABLE

- ITEM NOT ILLUSTRATED

BOEING PROPRIETARY - Copyright © - Unpublished Work - See title page for details.

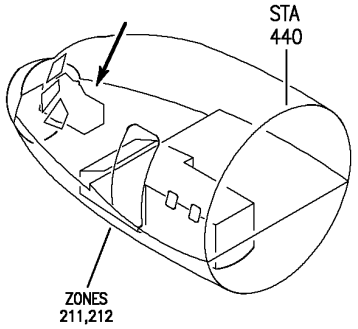

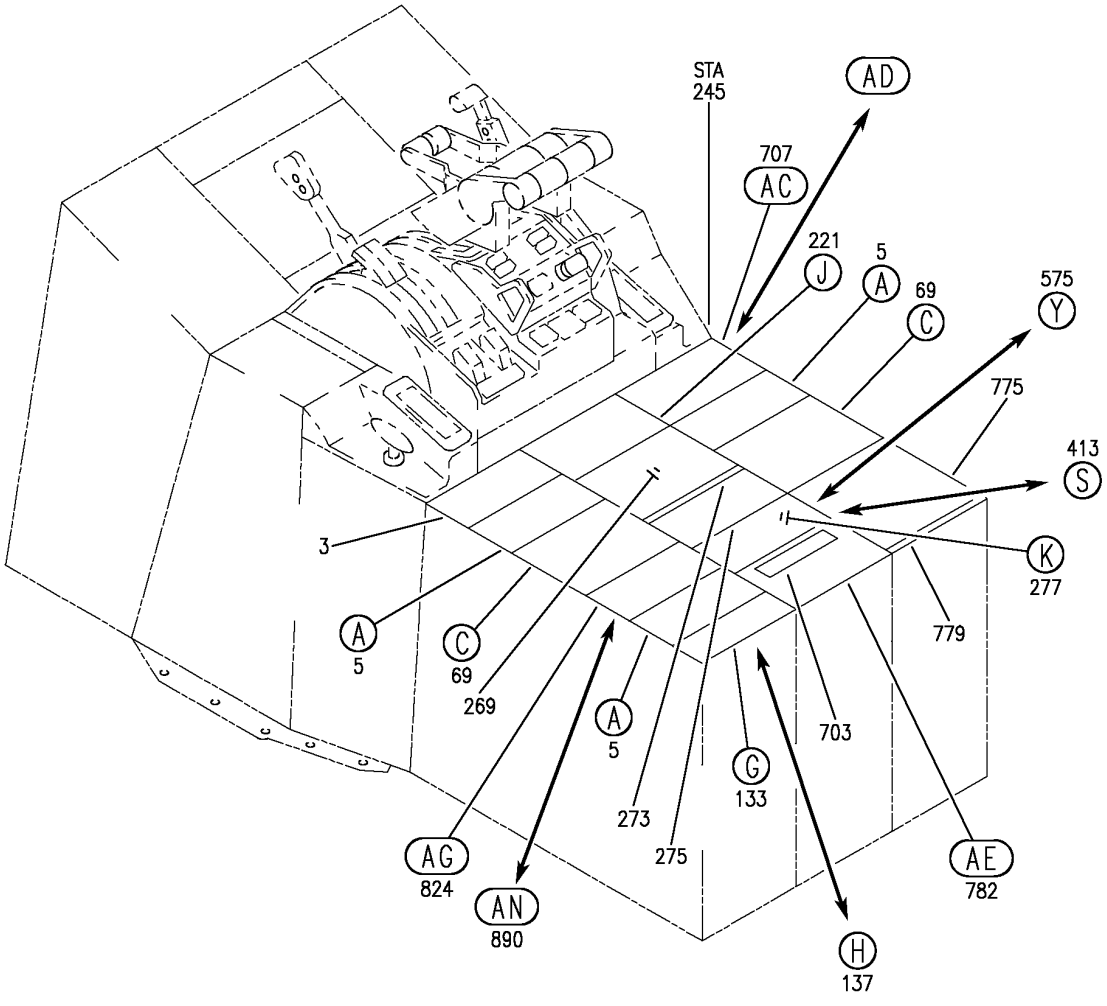

PANEL INSTL-P8 ELECTRONICS (CONTROL STAND AFT ELECTRONIC PANEL ONLY)
FIGURE 78 (SHEET 1)

BOEING PROPRIETARY - Copyright © - Unpublished Work - See title page for details.

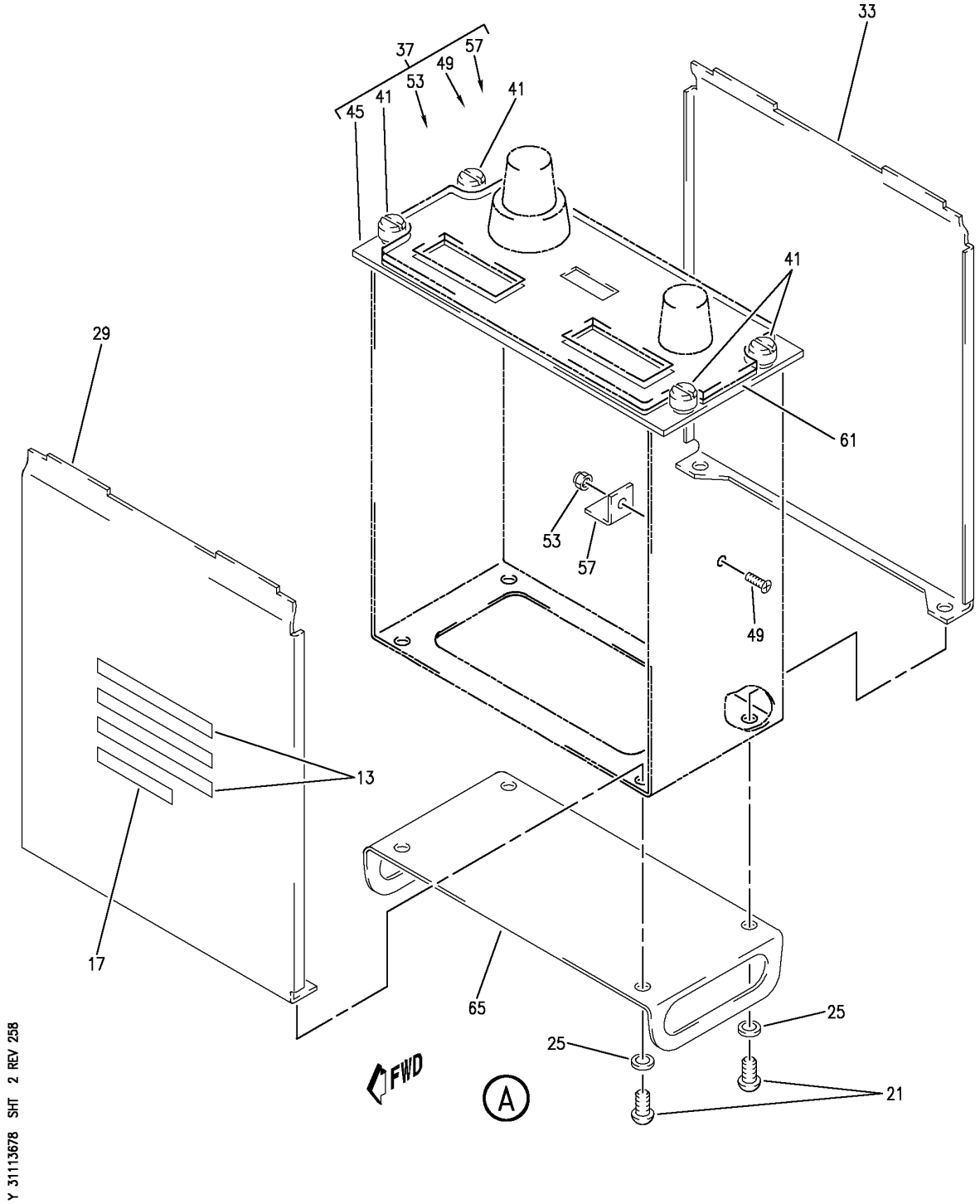

PANEL INSTL-P8 ELECTRONICS (CONTROL STAND AFT ELECTRONIC PANEL ONLY)
FIGURE 78 (SHEET 2)

BOEING PROPRIETARY - Copyright © - Unpublished Work - See title page for details.

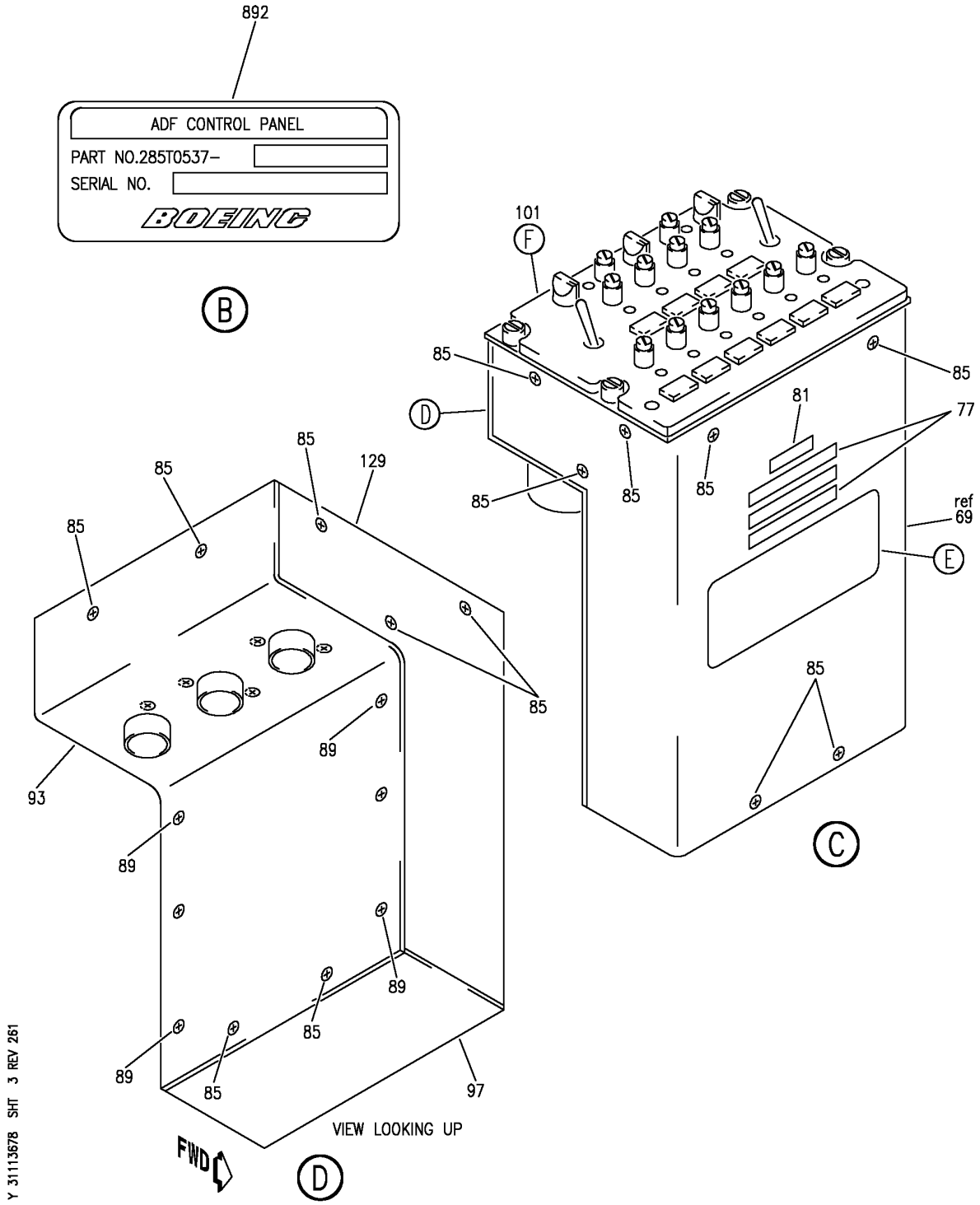

PANEL INSTL-P8 ELECTRONICS (CONTROL STAND AFT ELECTRONIC PANEL ONLY)
FIGURE 78 (SHEET 3)

BOEING PROPRIETARY - Copyright © - Unpublished Work - See title page for details.

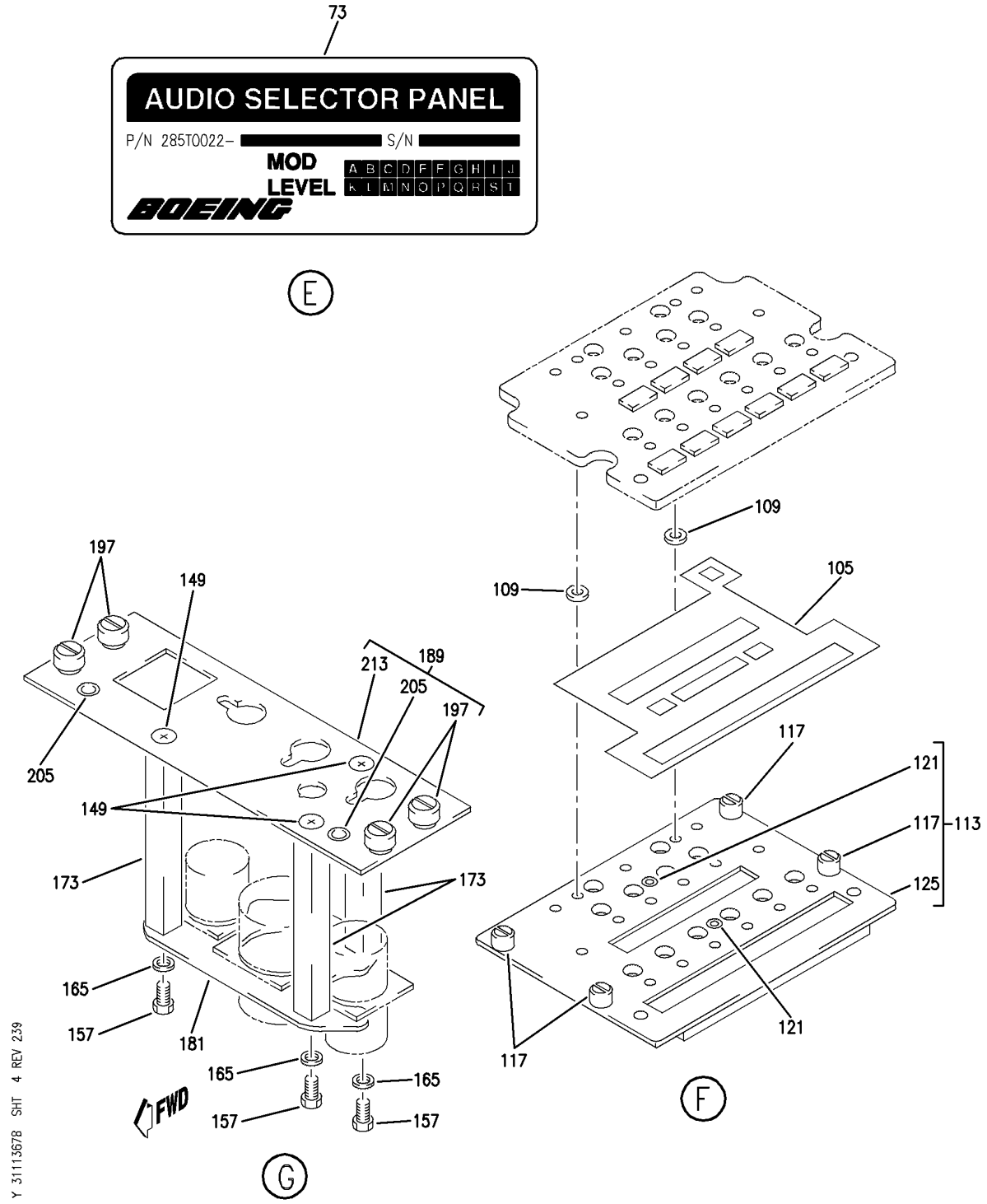

PANEL INSTL-P8 ELECTRONICS (CONTROL STAND AFT ELECTRONIC PANEL ONLY)
FIGURE 78 (SHEET 4)

BOEING PROPRIETARY - Copyright © - Unpublished Work - See title page for details.

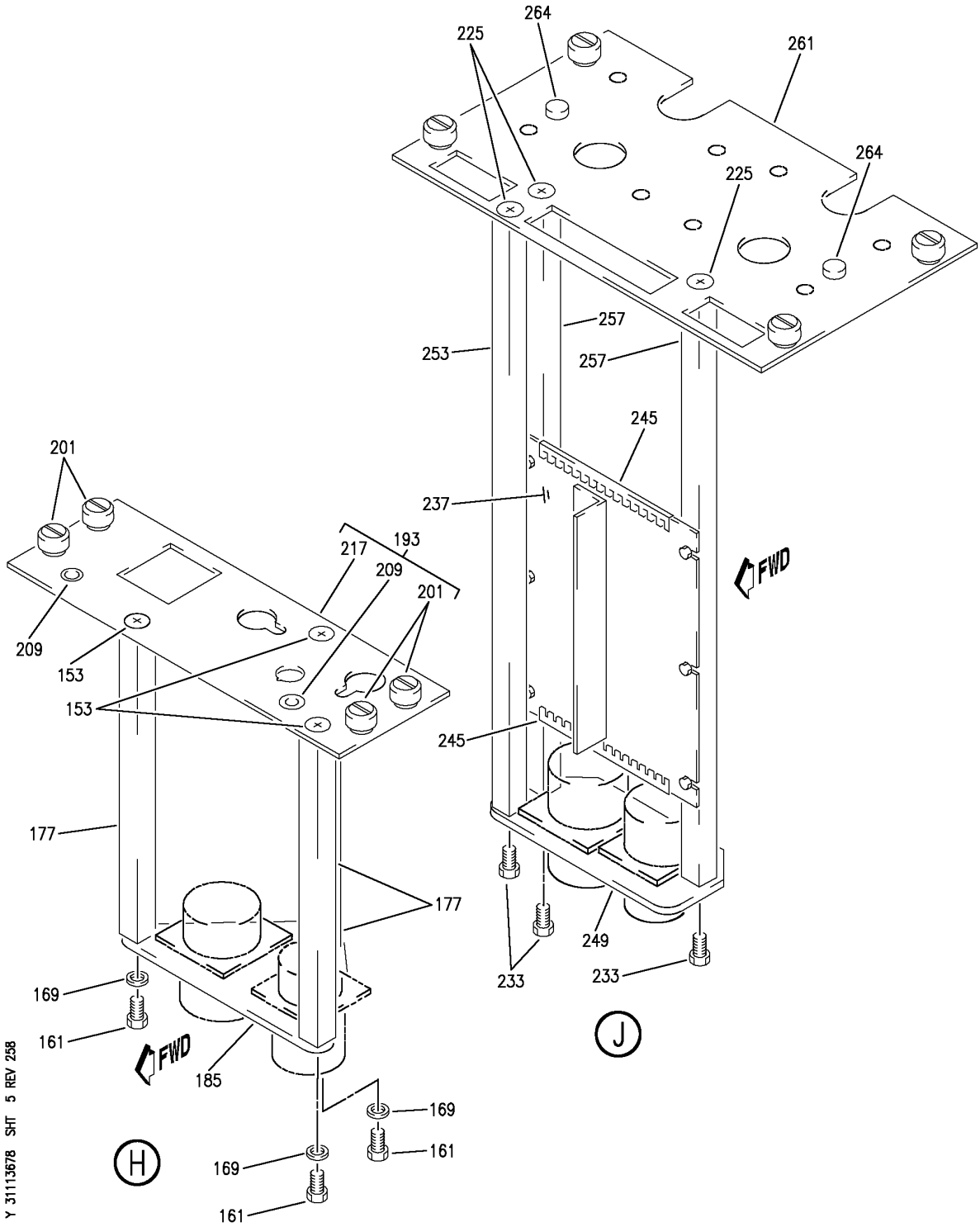

PANEL INSTL-P8 ELECTRONICS (CONTROL STAND AFT ELECTRONIC PANEL ONLY)
FIGURE 78 (SHEET 5)

BOEING PROPRIETARY - Copyright © - Unpublished Work - See title page for details.

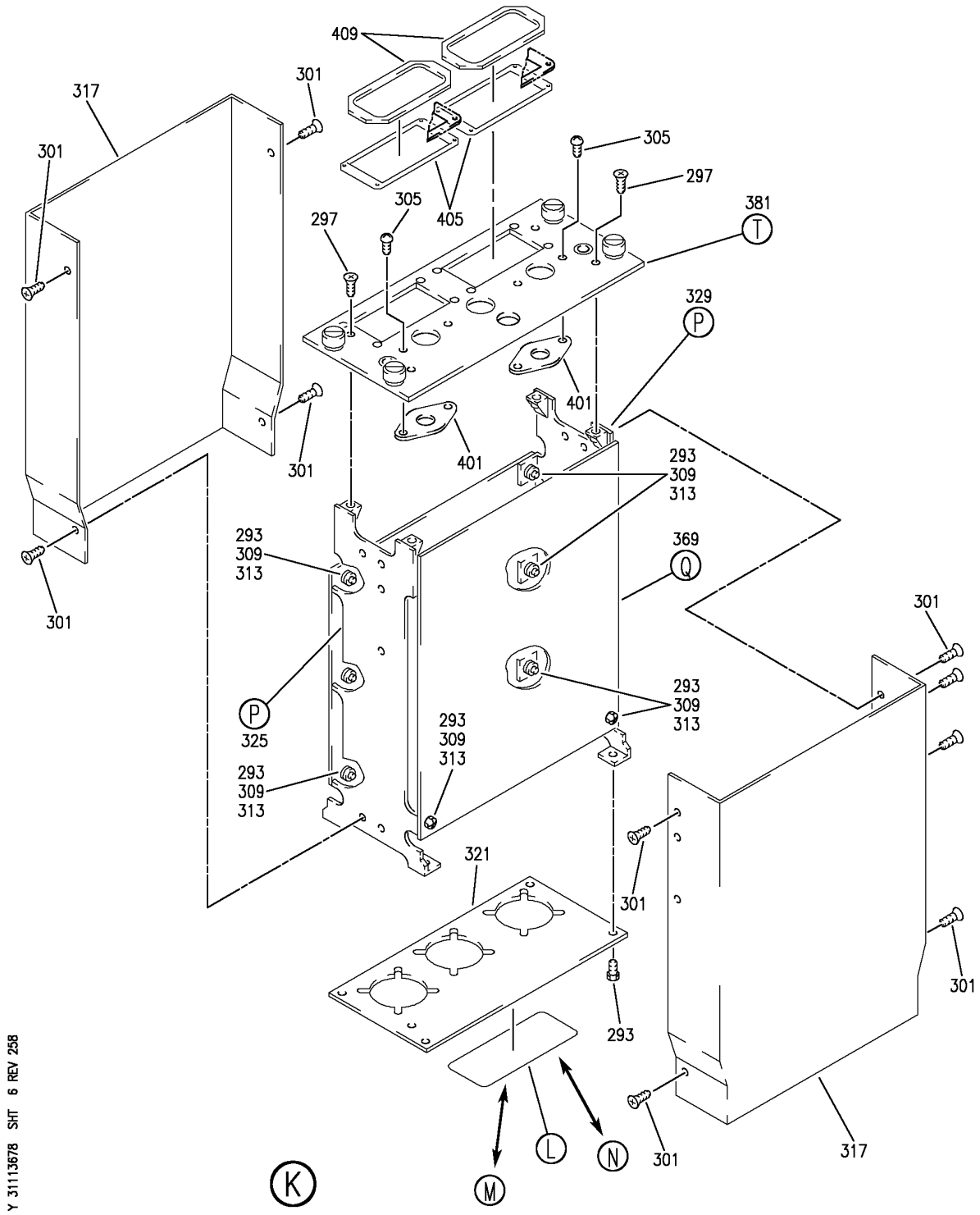

PANEL INSTL-P8 ELECTRONICS (CONTROL STAND AFT ELECTRONIC PANEL ONLY)
FIGURE 78 (SHEET 6)

BOEING PROPRIETARY - Copyright © - Unpublished Work - See title page for details.

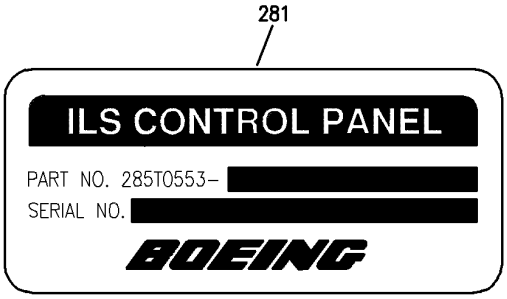

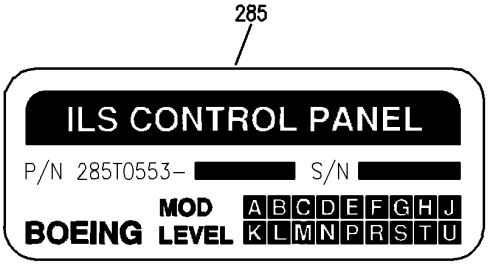

L

M

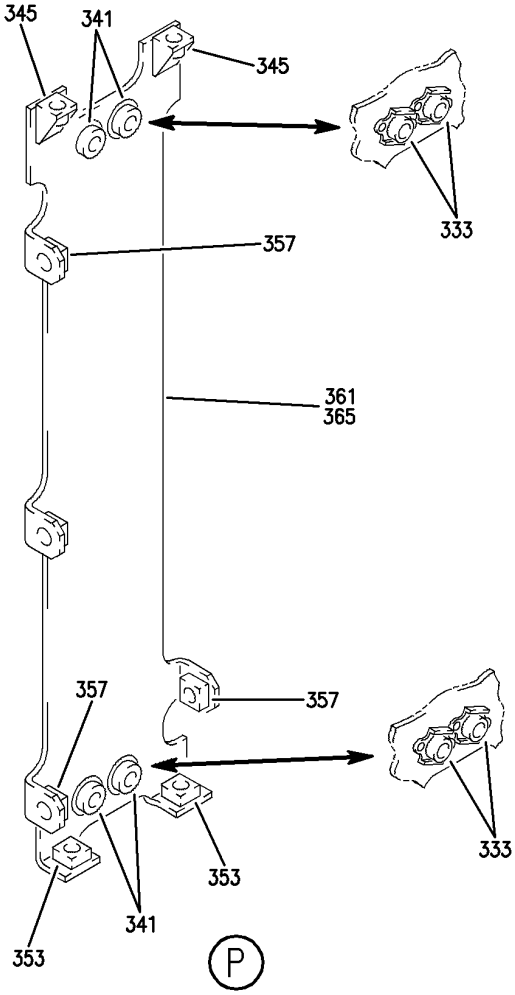

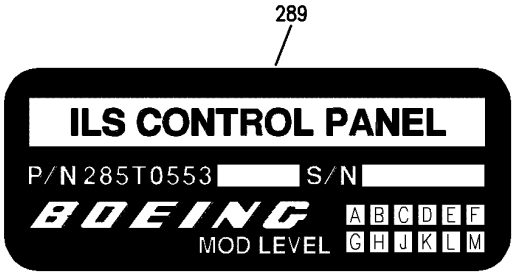

N

P

Y 31113678 SHT 7 REV 239

PANEL INSTL-P8 ELECTRONICS (CONTROL STAND AFT ELECTRONIC PANEL ONLY)
FIGURE 78 (SHEET 7)

BOEING PROPRIETARY - Copyright © - Unpublished Work - See title page for details.

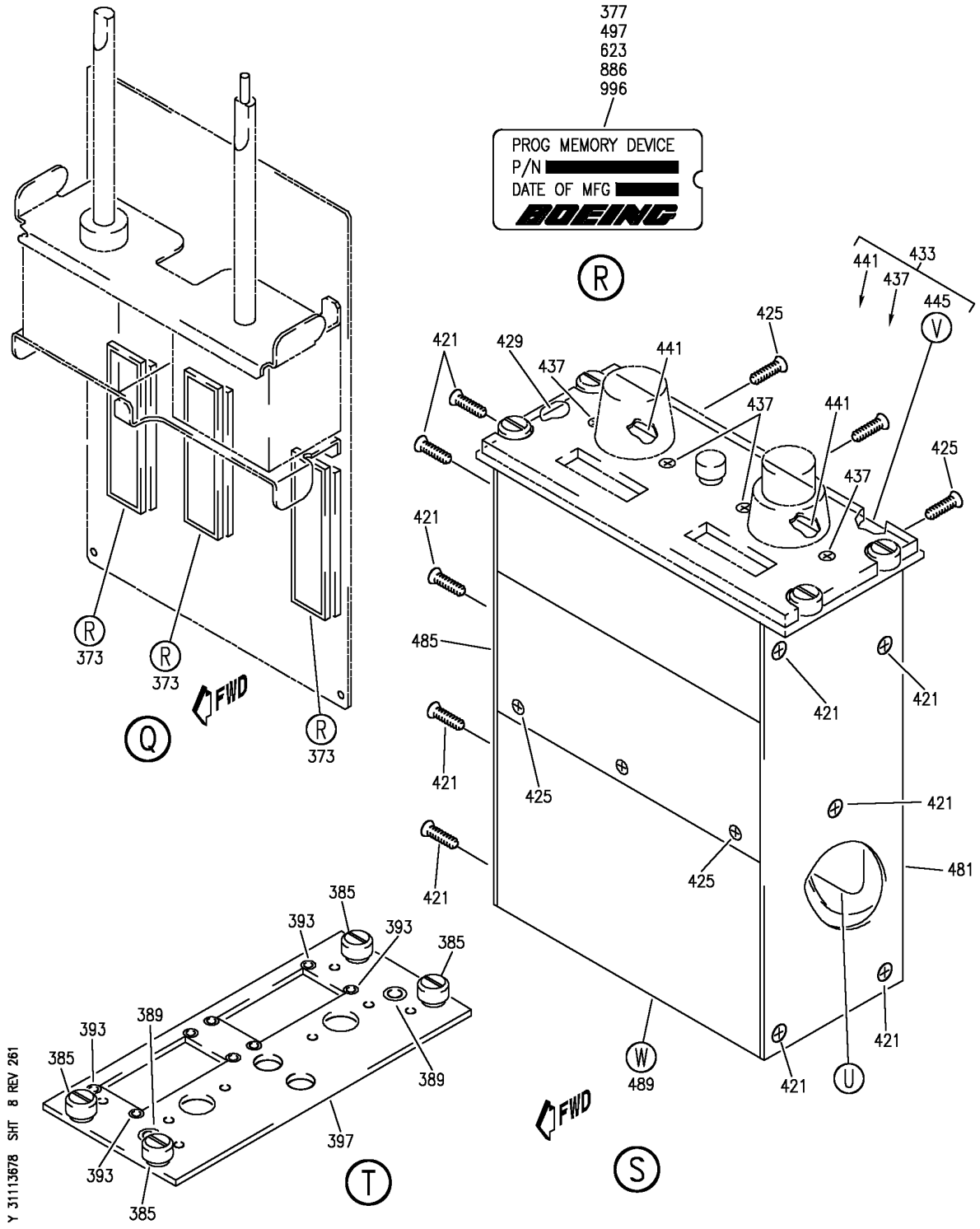

PANEL INSTL-P8 ELECTRONICS (CONTROL STAND AFT ELECTRONIC PANEL ONLY)
FIGURE 78 (SHEET 8)

BOEING PROPRIETARY - Copyright © - Unpublished Work - See title page for details.

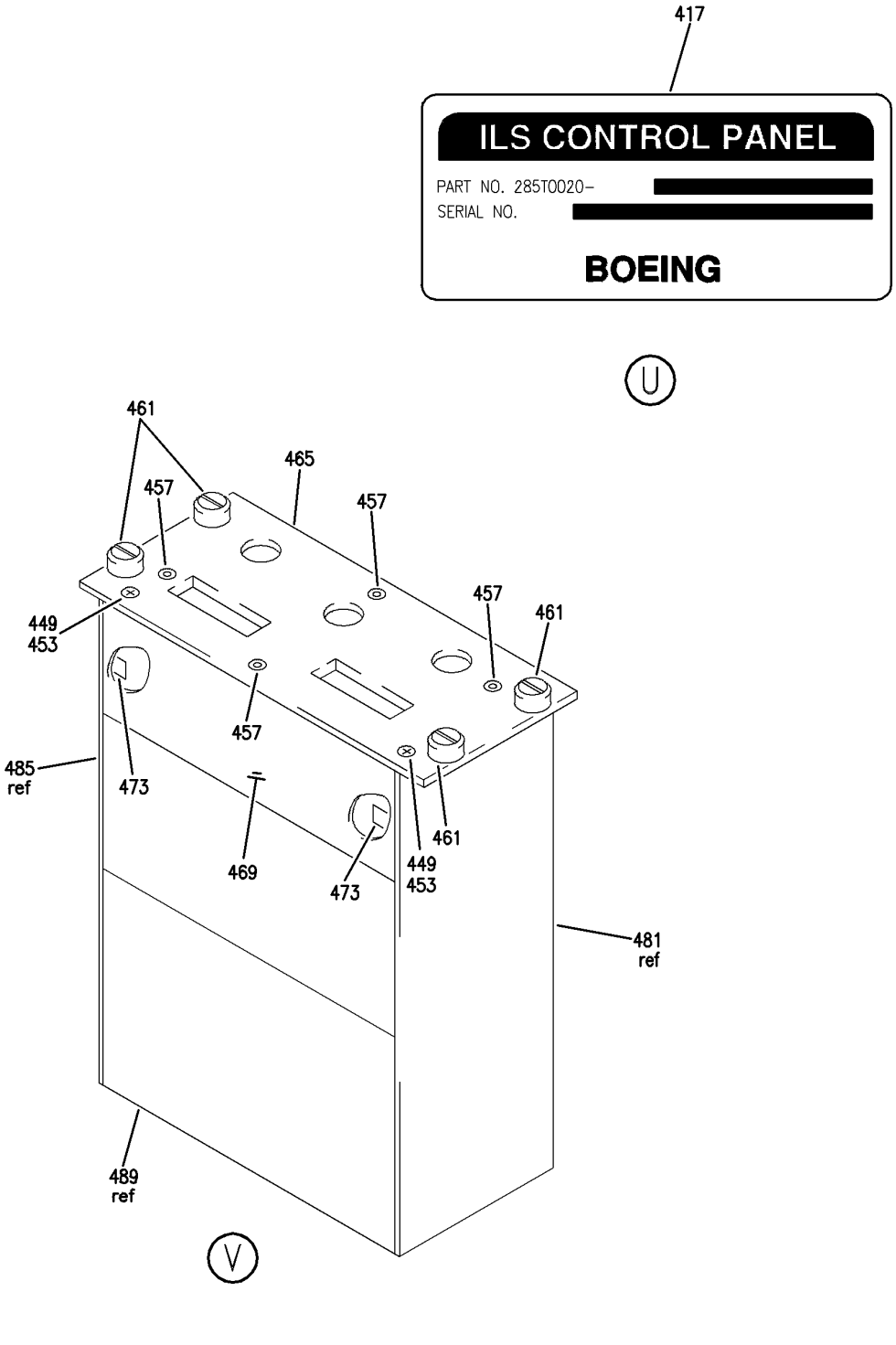

PANEL INSTL-P8 ELECTRONICS (CONTROL STAND AFT ELECTRONIC PANEL ONLY)
FIGURE 78 (SHEET 9)

BOEING PROPRIETARY - Copyright © - Unpublished Work - See title page for details.

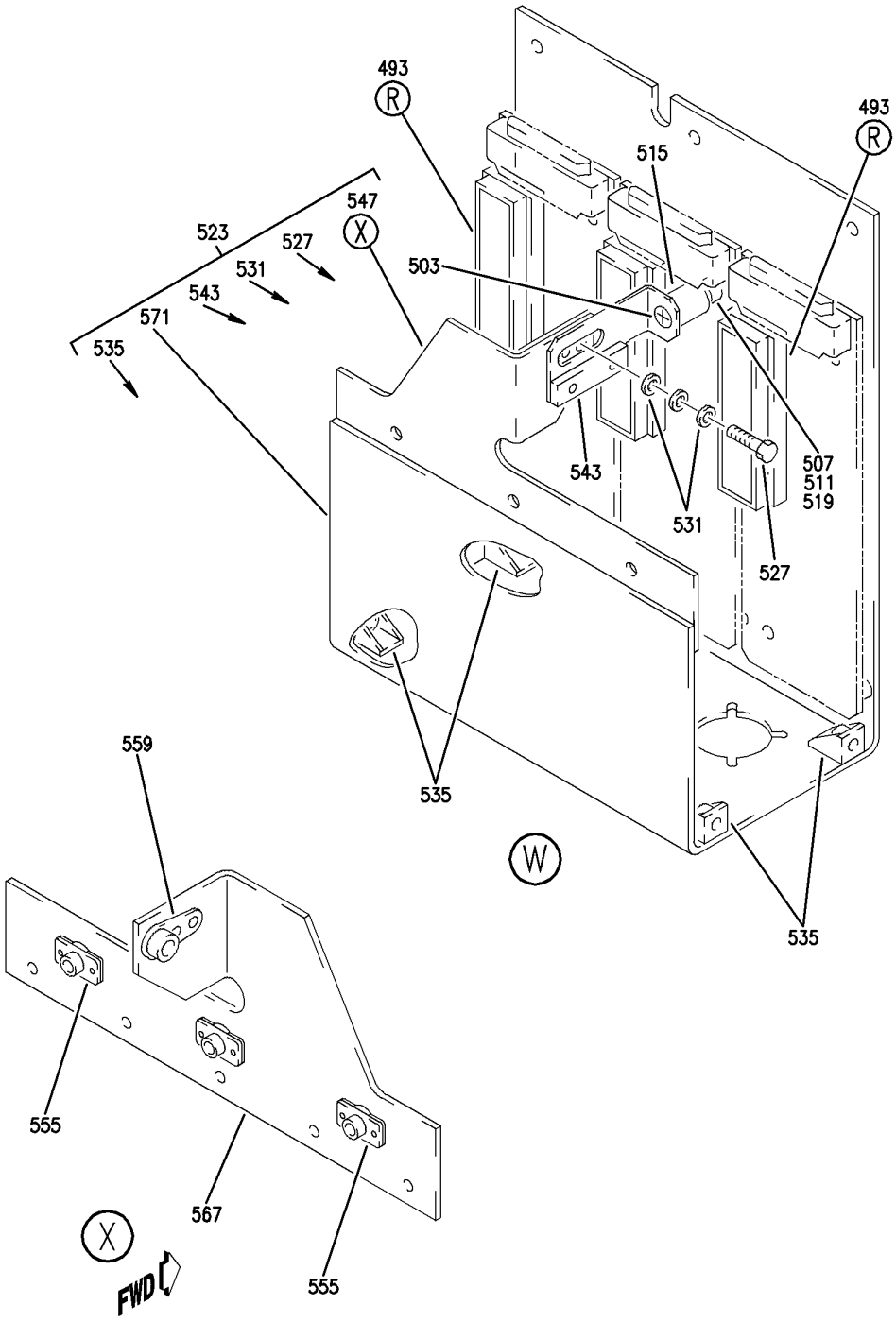

PANEL INSTL-P8 ELECTRONICS (CONTROL STAND AFT ELECTRONIC PANEL ONLY)
FIGURE 78 (SHEET 10)

BOEING PROPRIETARY - Copyright © - Unpublished Work - See title page for details.

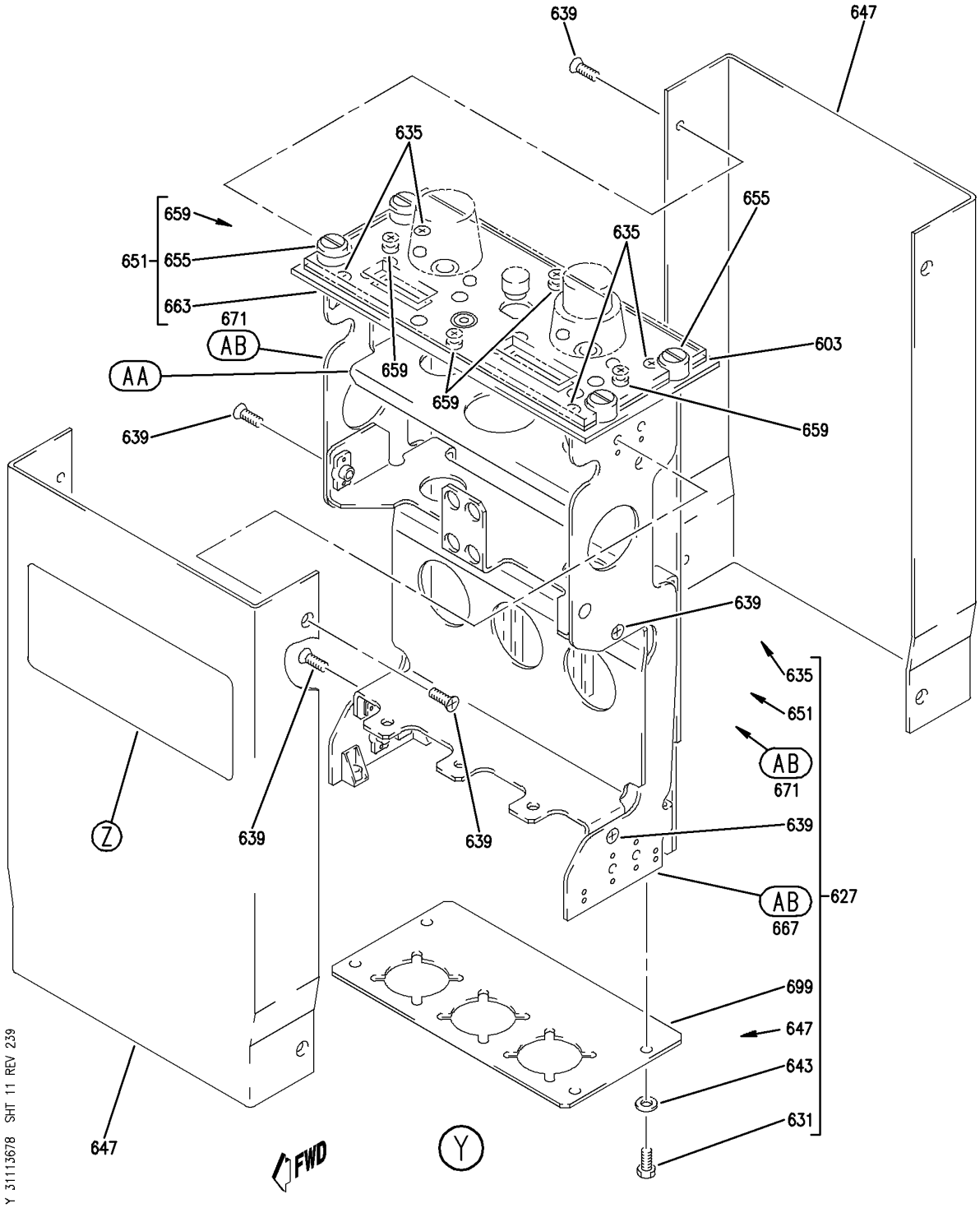

PANEL INSTL-P8 ELECTRONICS (CONTROL STAND AFT ELECTRONIC PANEL ONLY)
FIGURE 78 (SHEET 11)

BOEING PROPRIETARY - Copyright © - Unpublished Work - See title page for details.

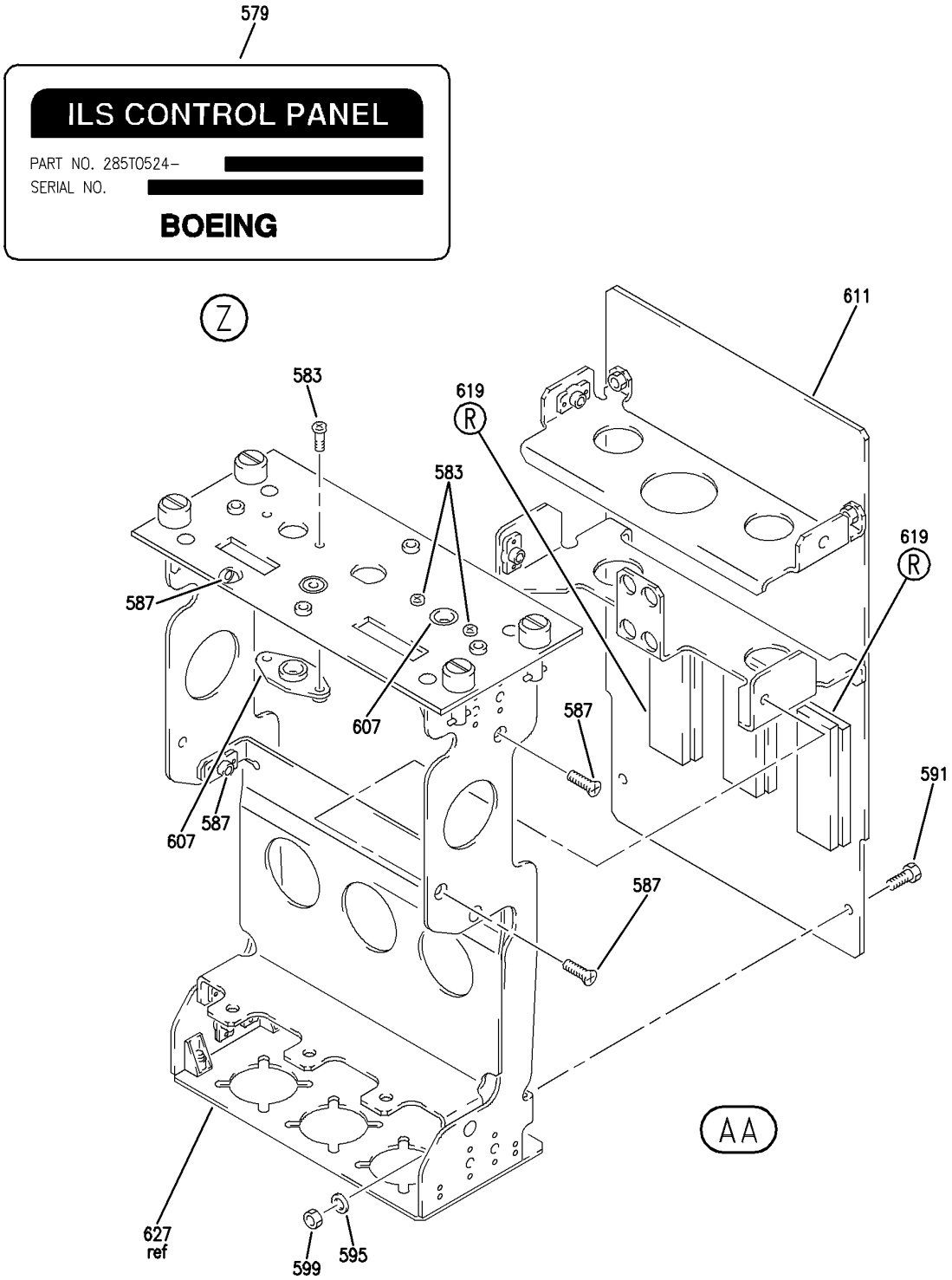

PANEL INSTL-P8 ELECTRONICS (CONTROL STAND AFT ELECTRONIC PANEL ONLY)
FIGURE 78 (SHEET 12)

BOEING PROPRIETARY - Copyright © - Unpublished Work - See title page for details.

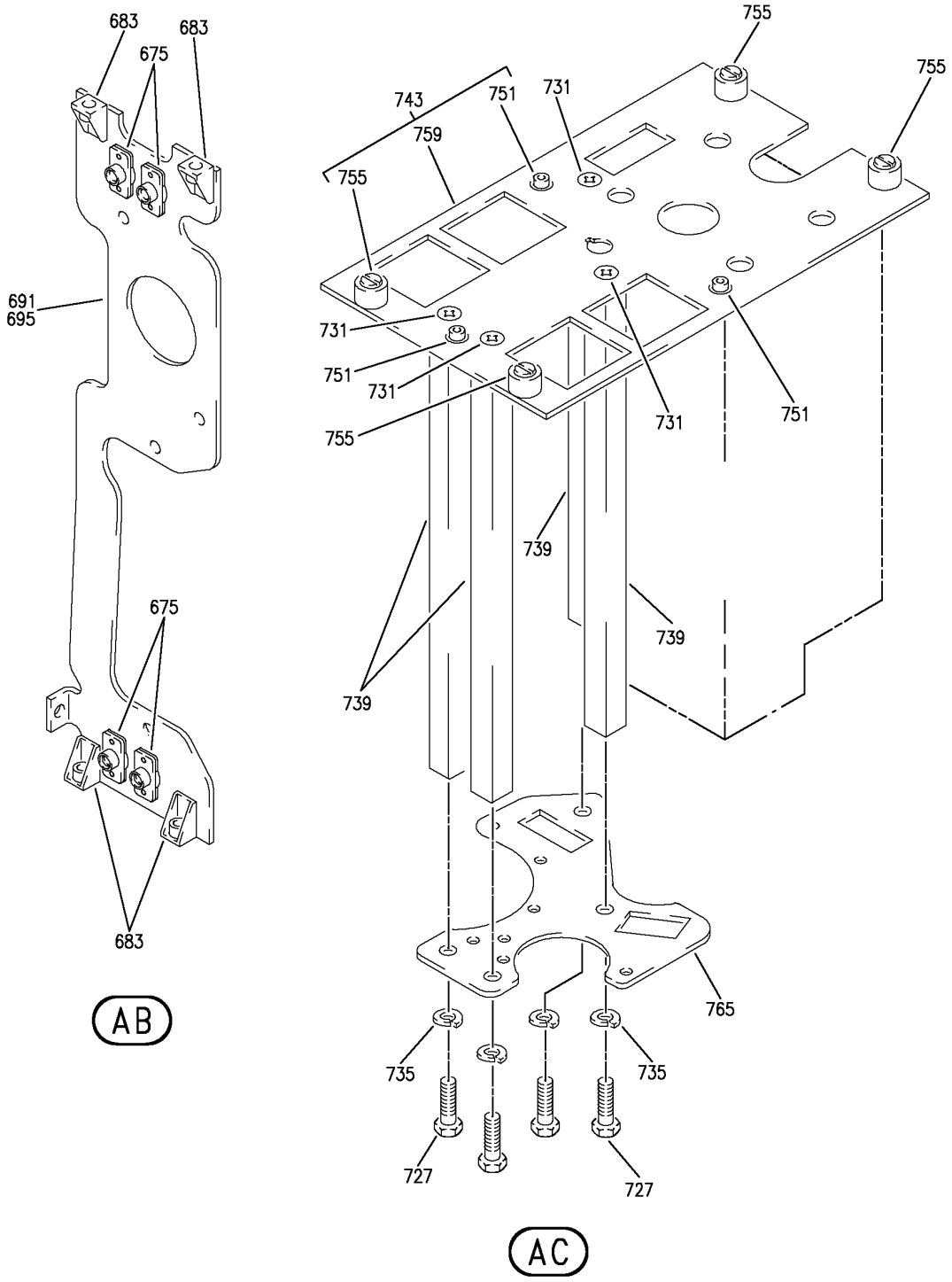

Y 31113678 SHT 13 REV 258

PANEL INSTL-P8 ELECTRONICS (CONTROL STAND AFT ELECTRONIC PANEL ONLY)
FIGURE 78 (SHEET 13)

BOEING PROPRIETARY - Copyright © - Unpublished Work - See title page for details.

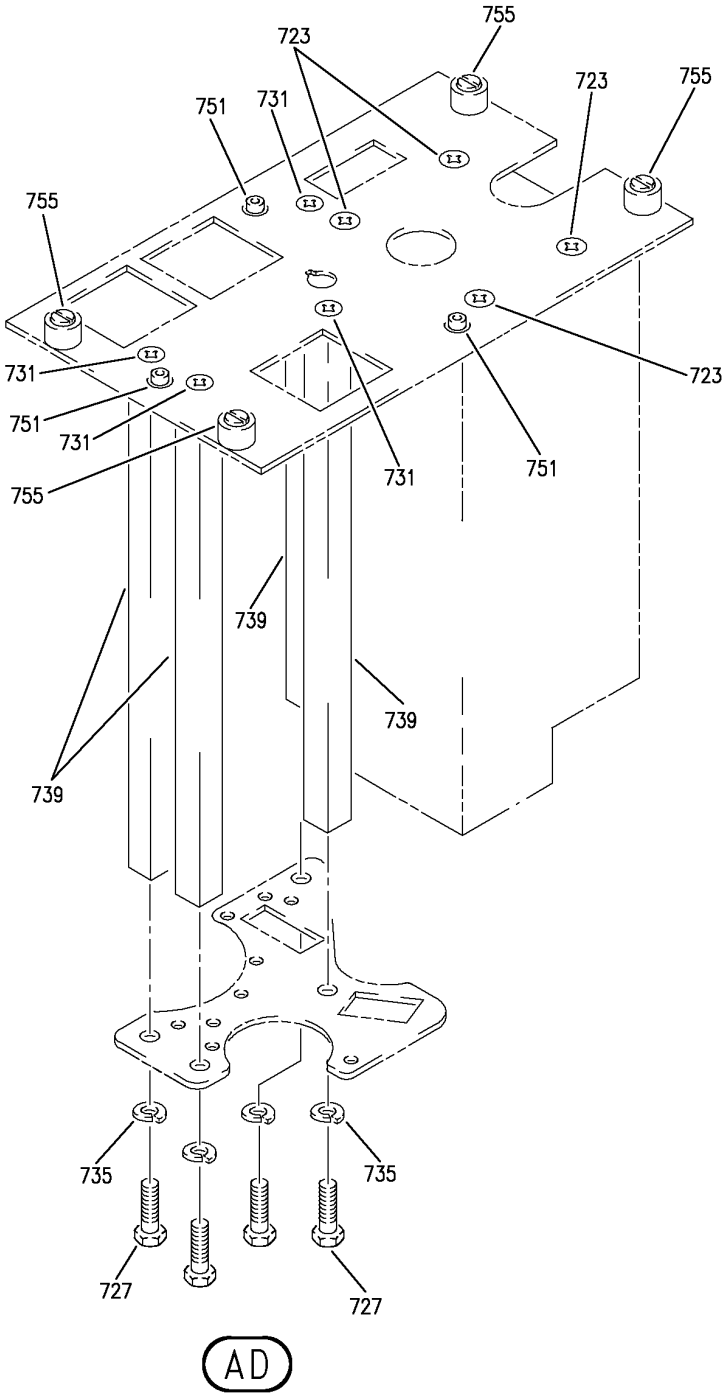

Y 31113678 SHT 14 REV 331

PANEL INSTL-P8 ELECTRONICS (CONTROL STAND AFT ELECTRONIC PANEL ONLY)
FIGURE 78 (SHEET 14)

BOEING PROPRIETARY - Copyright © - Unpublished Work - See title page for details.

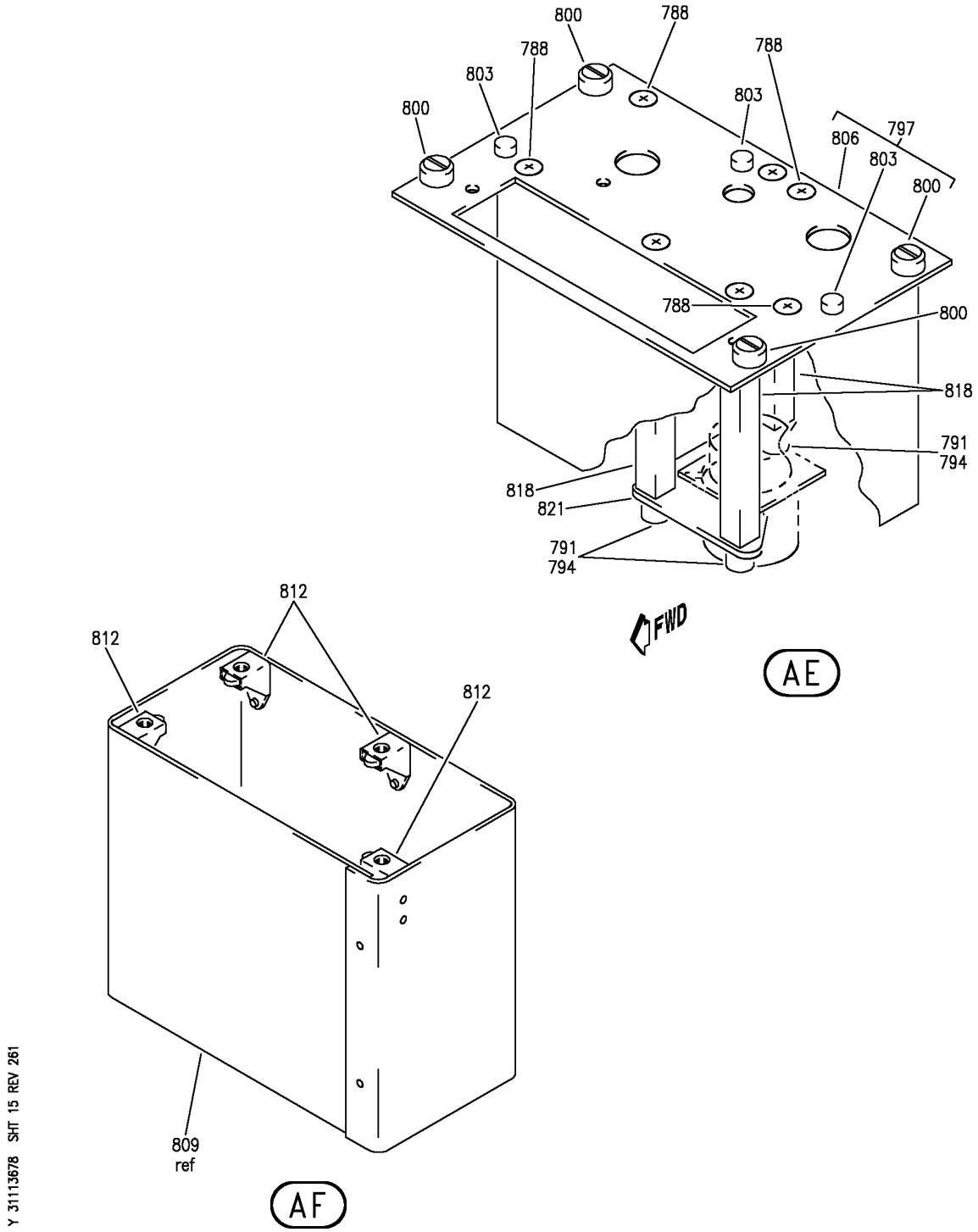

PANEL INSTL-P8 ELECTRONICS (CONTROL STAND AFT ELECTRONIC PANEL ONLY)
FIGURE 78 (SHEET 15)

BOEING PROPRIETARY - Copyright © - Unpublished Work - See title page for details.

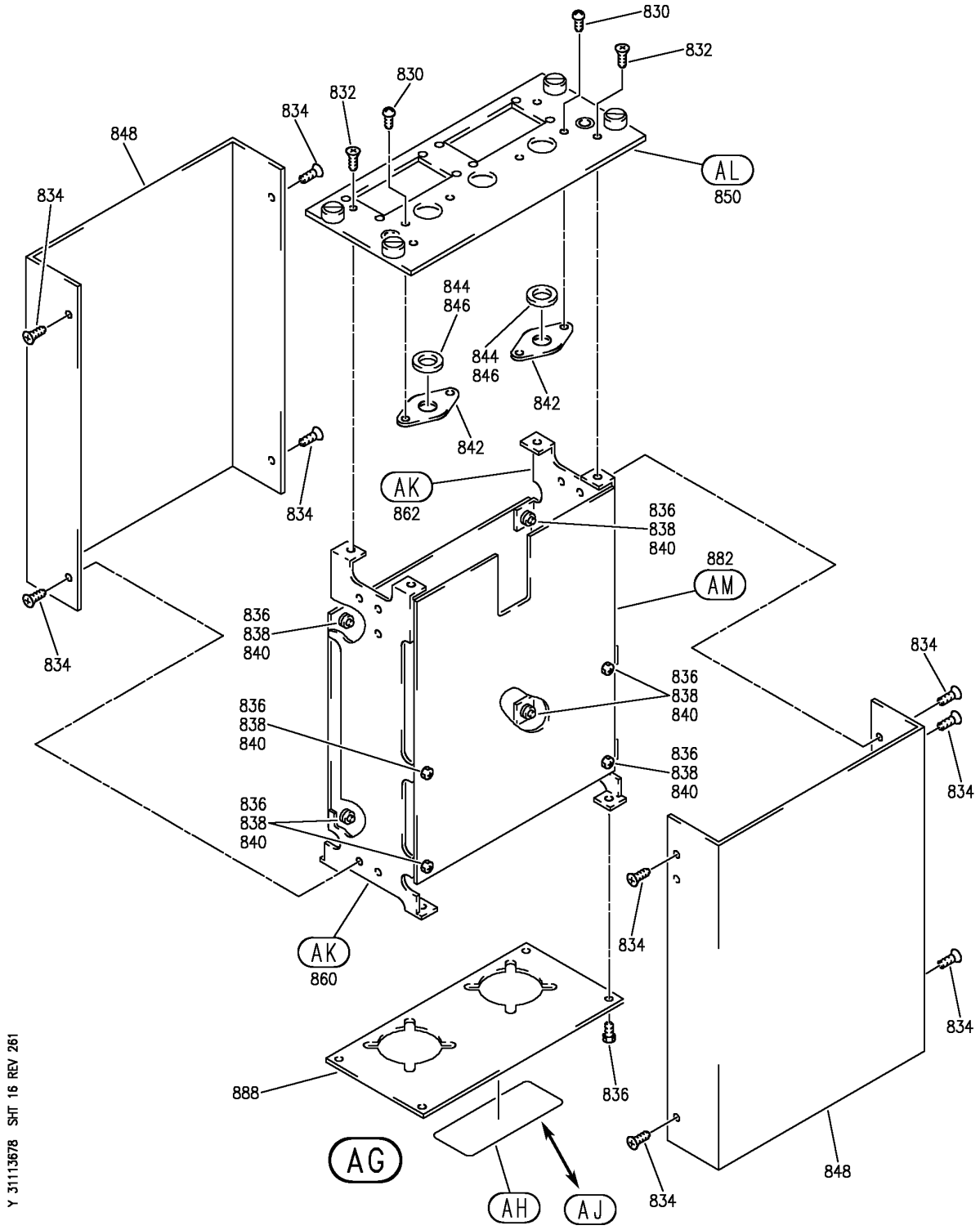

PANEL INSTL-P8 ELECTRONICS (CONTROL STAND AFT ELECTRONIC PANEL ONLY)
FIGURE 78 (SHEET 16)

BOEING PROPRIETARY - Copyright © - Unpublished Work - See title page for details.

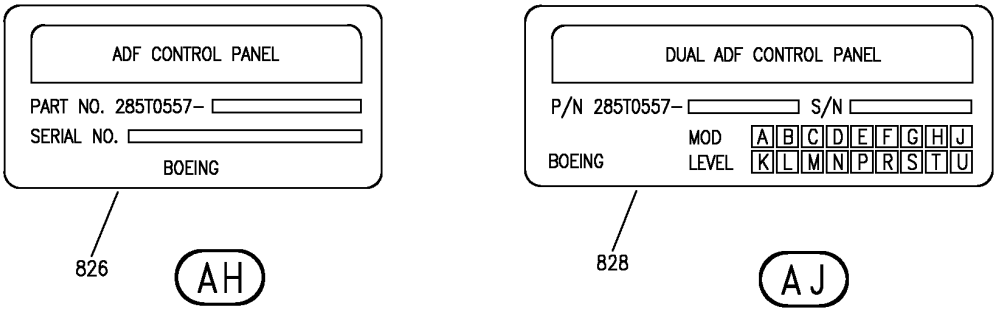

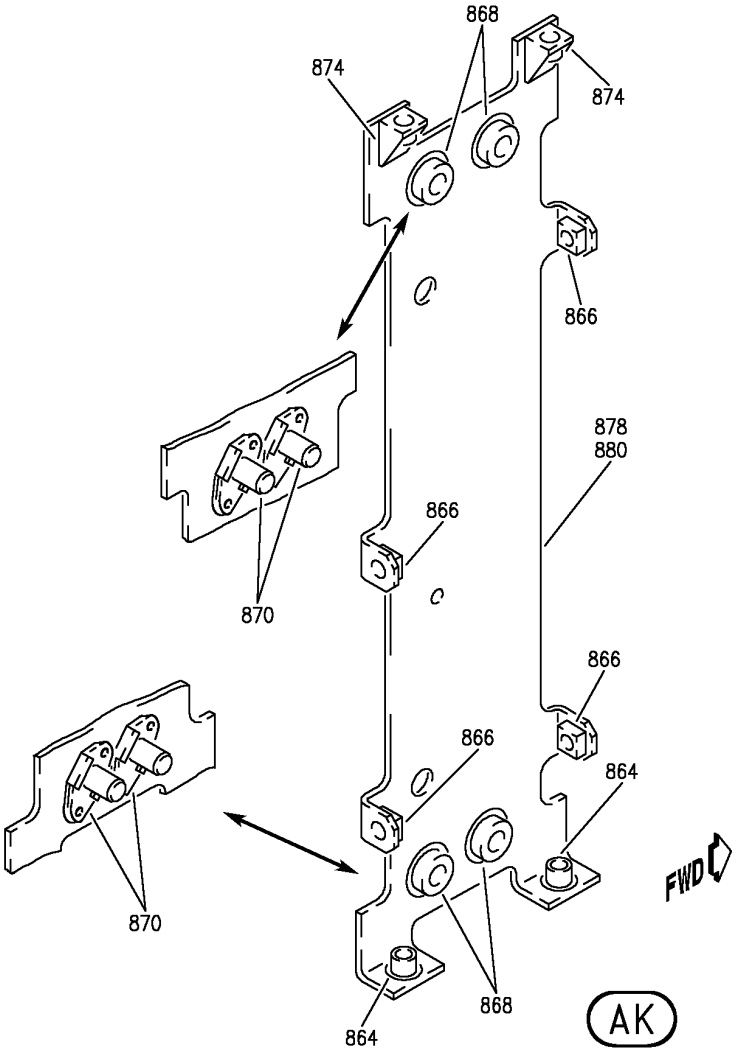

Y 31113678 SHT 17 REV 261

PANEL INSTL-P8 ELECTRONICS (CONTROL STAND AFT ELECTRONIC PANEL ONLY)
FIGURE 78 (SHEET 17)

BOEING PROPRIETARY - Copyright © - Unpublished Work - See title page for details.

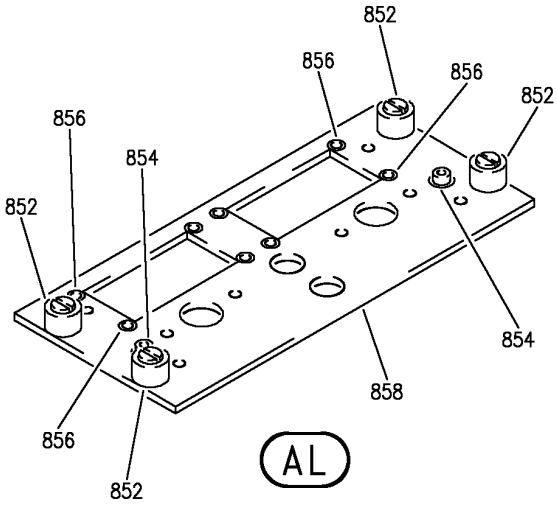

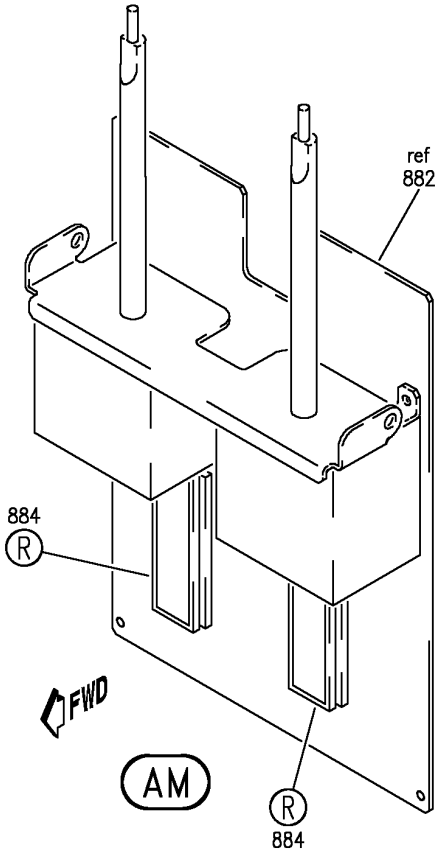

Y 31113678 SHT 18 REV 261

PANEL INSTL-P8 ELECTRONICS (CONTROL STAND AFT ELECTRONIC PANEL ONLY)
FIGURE 78 (SHEET 18)

BOEING PROPRIETARY - Copyright © - Unpublished Work - See title page for details.

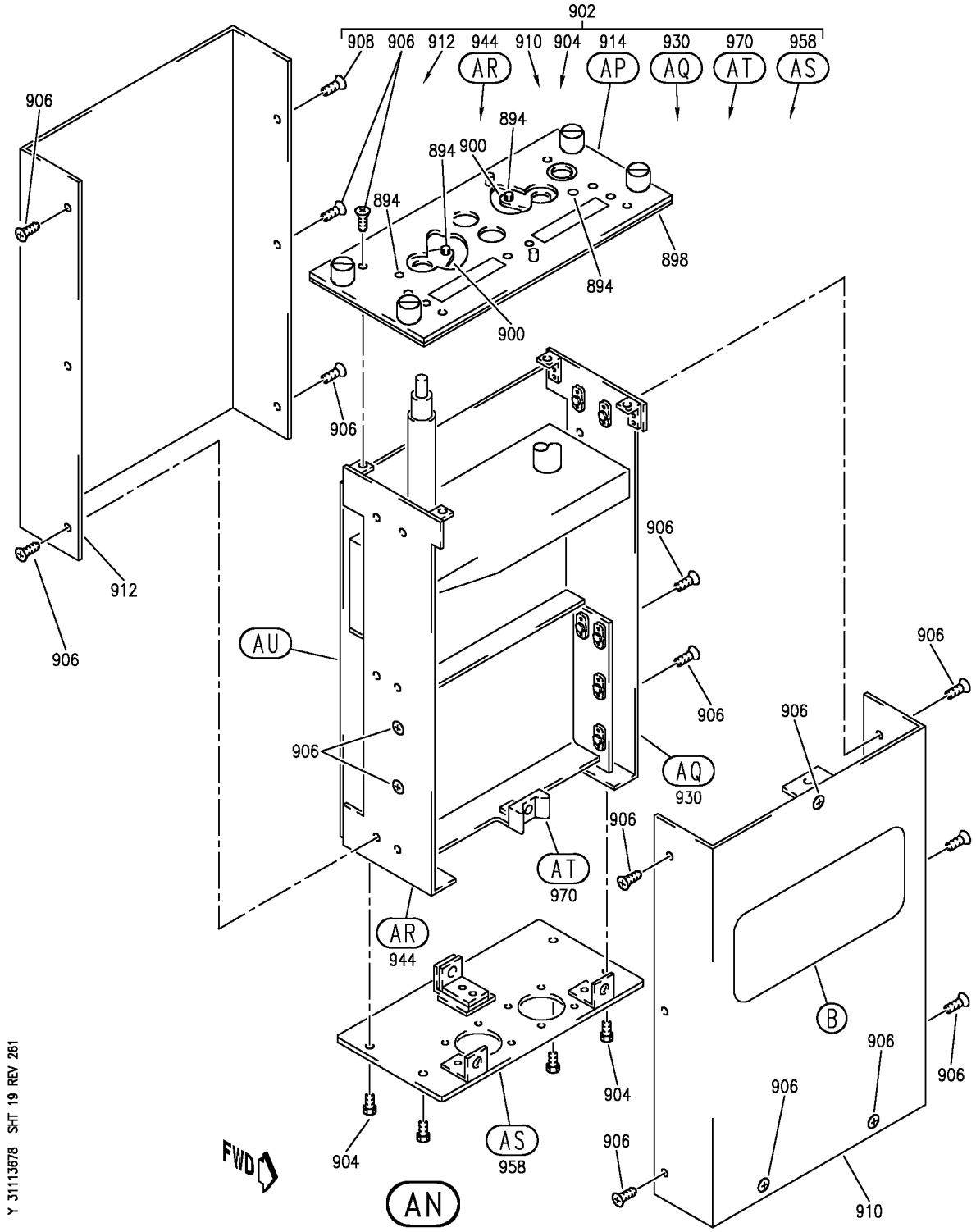

PANEL INSTL-P8 ELECTRONICS (CONTROL STAND AFT ELECTRONIC PANEL ONLY)
FIGURE 78 (SHEET 19)

BOEING PROPRIETARY - Copyright © - Unpublished Work - See title page for details.

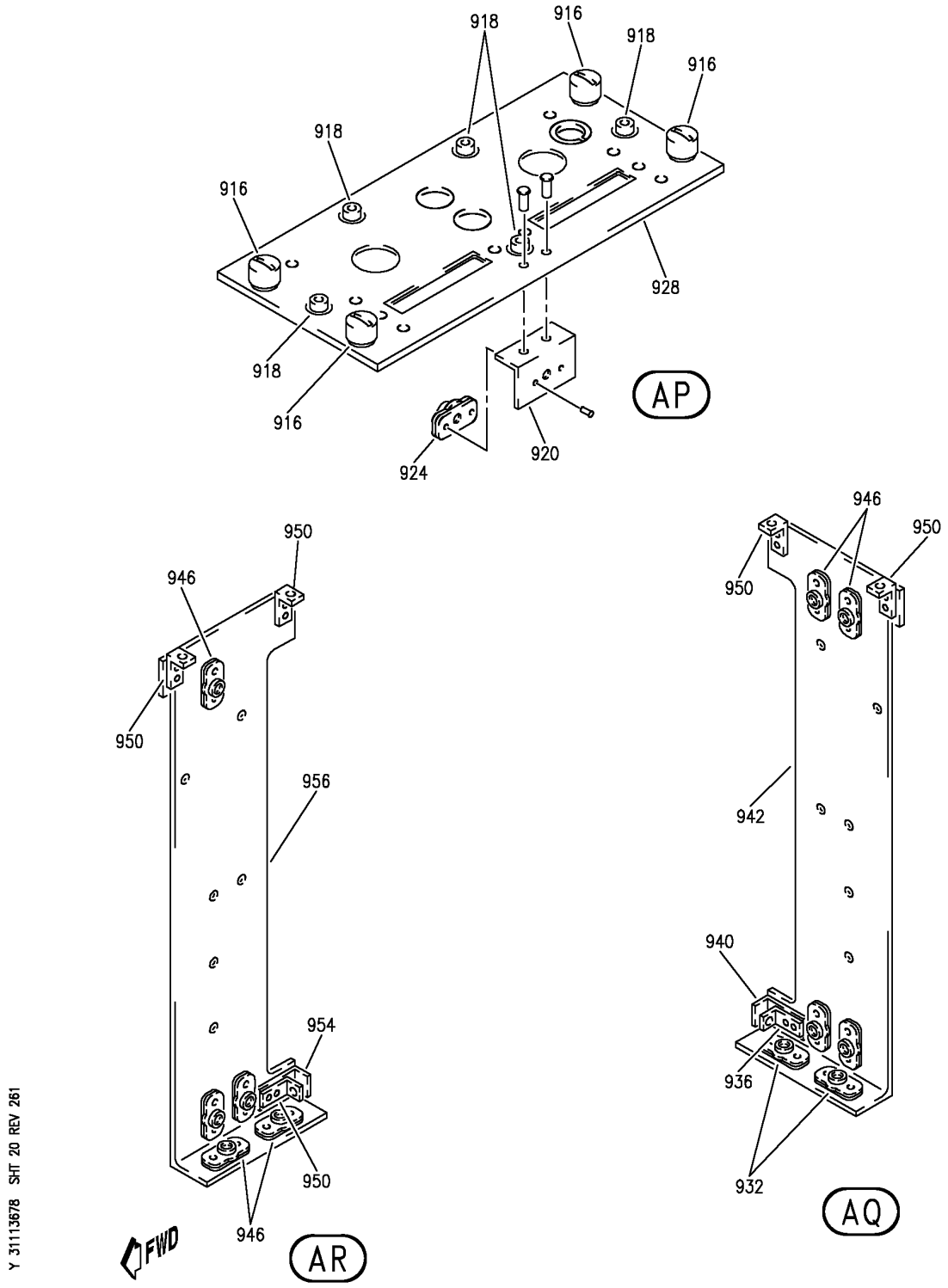

PANEL INSTL-P8 ELECTRONICS (CONTROL STAND AFT ELECTRONIC PANEL ONLY)
FIGURE 78 (SHEET 20)

BOEING PROPRIETARY - Copyright © - Unpublished Work - See title page for details.

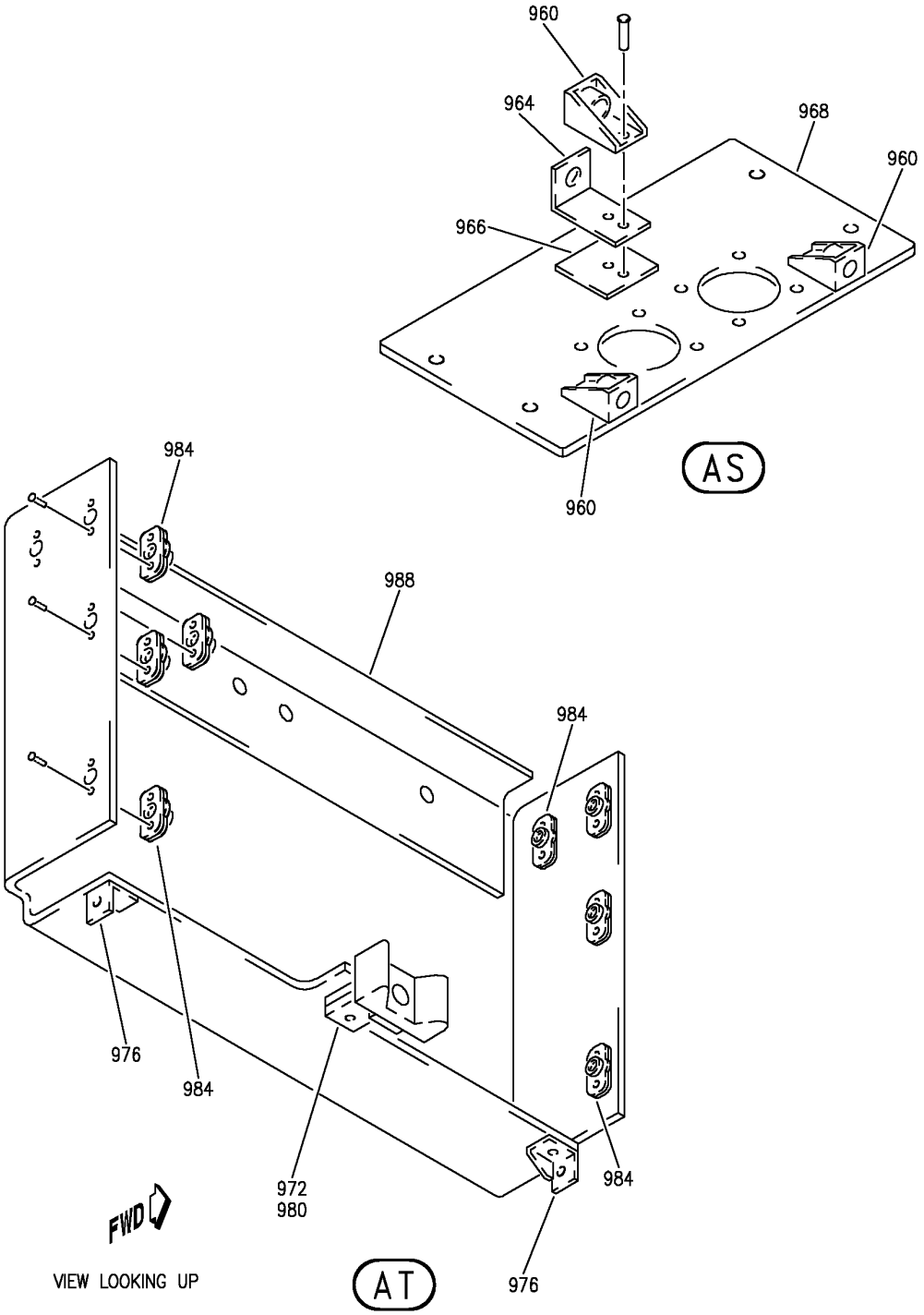

PANEL INSTL-P8 ELECTRONICS (CONTROL STAND AFT ELECTRONIC PANEL ONLY)
FIGURE 78 (SHEET 21)

BOEING PROPRIETARY - Copyright © - Unpublished Work - See title page for details.

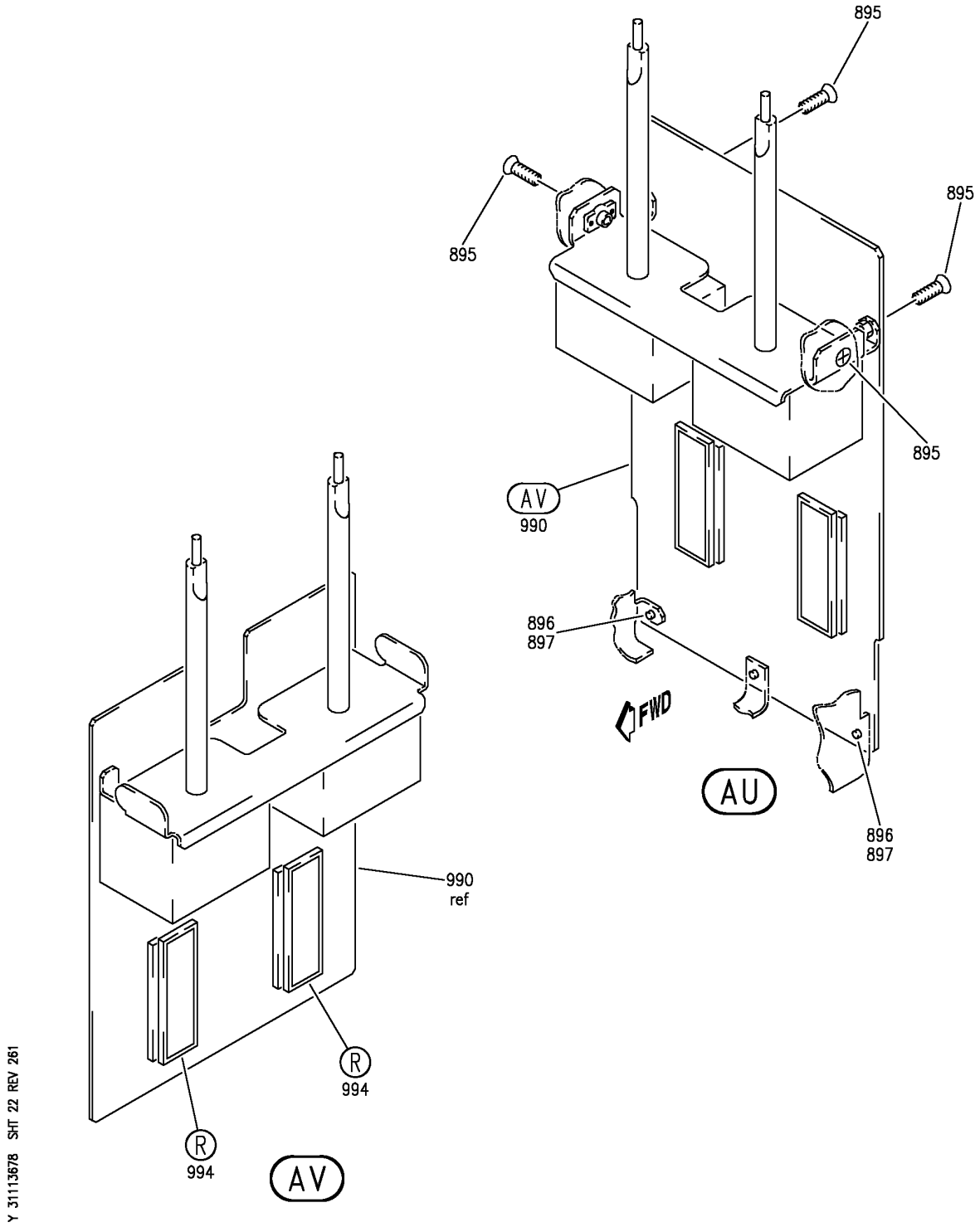

PANEL INSTL-P8 ELECTRONICS (CONTROL STAND AFT ELECTRONIC PANEL ONLY)
FIGURE 78 (SHEET 22)

BOEING PROPRIETARY - Copyright © - Unpublished Work - See title page for details.

FIG ITEM	PART NUMBER	1 2 3 4 5 6 7 NOMENCLATURE	EFFECT FROM TO	UNITS PER ASSY
78				
		PANEL INSTL-P8 ELECTRONICS (CONTROL STAND AFT ELECTRONIC PANEL ONLY)	103106	
- 1	MODREF33990	PANEL INSTL-P8 ELECTRONICS (CONTROL STAND AFT ELECTRONIC PANEL ONLY)	103106	1
		MODULE NUMBER: 233N6103-253 REV B		
		FOR OTHER SYS DETAILS SEE:		
		11-31-05-66F		
		23-12-02-03		
		23-51-01-05		
		26-11-02-01		
		26-11-54-02A		
		26-12-51-03		
		26-17-51-06		
		26-21-01-02		
		26-22-03-03		
		26-23-52-04A		
		27-11-23-03		
		27-21-23-03		
		27-28-02-01A		
		31-41-03-02		
		33-13-01-07		
		34-22-02-03		
		34-31-02-02		
		34-43-02-02		
		34-53-02-02		
		34-57-02-03		
		34-61-02-03		
		FOR ADDITIONAL DETAILS SEE:		
		31-11-31-02		
		31-11-41-02		
3	622-5129-801	.PANEL-WEATHER RDR CONT (CUSTOMER FURNISHED)	103106	RF
		SUPPLIER CODE: V4V792		
		FUNCTIONAL DESCRIPTION: ALLOWS FLIGHT CREW TO SELECT OPERATIONAL MODE, GAIN, AND ANTENNA TILT ANGLE FOR THE WEATHER RADAR SYSTEM.		
		ELECTRICAL EQUIP NUMBER: M00075		
		FOR BREAKDOWN SEE: 34-43-02-02		

MISSING ITEM NUMBERS NOT APPLICABLE

- ITEM NOT ILLUSTRATED

BOEING PROPRIETARY - Copyright © - Unpublished Work - See title page for details.

FIG ITEM	PART NUMBER	1 2 3 4 5 6 7 NOMENCLATURE	EFFECT FROM TO	UNITS PER ASSY
78				
5	285U0037-613	.PANEL ASSY-RADIO COMM SUPPLIER CODE: V89954 ELECTRICAL EQUIP NUMBER: M10864 M10865 M10866 COMPONENT MAINT MANUAL REF: 23-11-20 QUALIFIED I/W DATA: 285U0037-603 IS ONE WAY INTERCHANGEABLE WITH 285U0037-613 AND NOT INTERMIXABLE ONLY IF SERVICE BULLETIN 747-23-2466 OR 757-23-0057 IS INCORPORATED FOR OTHER SYS DETAILS SEE: 11-31-05-66F 23-12-02-03 33-13-01-07	103106	3
13	S906-10207-2	..LABEL	103106	3
17	S906-10207-4	..LABEL	103106	1
21	MS51957-14	..SCREW- OPTIONAL PART: MS51957-17 NAS600-8P	103106	4
21	MS51957-17	..SCREW- OPTIONAL PART: MS51957-14	103106	4
21	NAS600-8P	..SCREW- OPTIONAL PART: MS51957-14	103106	4
25	NAS1149CN432R	..WASHER- OPTIONAL PART: AN960C4L	103106	4
25	AN960C4L	..WASHER- OPTIONAL PART: NAS1149CN432R	103106	4
29	285U0050-1	..COVER-TOP SUPPLIER CODE: V89954 OPTIONAL PART: 285U0050-2 V89954	103106	1

MISSING ITEM NUMBERS NOT APPLICABLE

— ITEM NOT ILLUSTRATED

BOEING PROPRIETARY - Copyright © - Unpublished Work - See title page for details.

FIG ITEM	PART NUMBER	1 2 3 4 5 6 7 NOMENCLATURE	EFFECT FROM TO	UNITS PER ASSY
78				
29	285U0050-2	..COVER-TOP SUPPLIER CODE: V89954 OPTIONAL PART: 285U0050-1 V89954	103106	1
33	285U0050-1	..COVER-BOTTOM SUPPLIER CODE: V89954	103106	1
37	285U0048-1	..ENCLOSURE ASSY- SUPPLIER CODE: V89954 OPTIONAL PART: 285U0048-20 V89954	103106	1
37	285U0048-7	..ENCLOSURE ASSY- SUPPLIER CODE: V89954 OPTIONAL PART: 285U0048-20 V89954	103106	1
37	285U0048-10	..ENCLOSURE ASSY- SUPPLIER CODE: V89954 OPTIONAL PART: 285U0048-20 V89954	103106	1
37	285U0048-20	..ENCLOSURE ASSY- SUPPLIER CODE: V89954 OPTIONAL PART: 285U0048-1 V89954 285U0048-7 V89954 285U0048-10 V89954	103106	1
41	BACS21DD1B	...STUD ASSY- SUPPLIER CODE: V08524 SPECIFICATION NUMBER: BACS21DD1B USED ON: 285U0048-10 285U0048-7 285U0048-1	103106	4

MISSING ITEM NUMBERS NOT APPLICABLE

– ITEM NOT ILLUSTRATED

BOEING PROPRIETARY - Copyright © - Unpublished Work - See title page for details.

FIG ITEM	PART NUMBER	1 2 3 4 5 6 7 NOMENCLATURE	EFFECT FROM TO	UNITS PER ASSY
78				
41	BACS21DD1B	...STUD ASSY-	103106	4
		SUPPLIER CODE:		
		V08524		
		SPECIFICATION NUMBER:		
		BACS21DD1B		
		OPTIONAL PART:		
		BACS21DX1B		
		USED ON:		
		285U0048-20		
41	PFSC35-38ASEMB	...STUD ASSY-	103106	4
		SUPPLIER CODE:		
		V72794		
		SPECIFICATION NUMBER:		
		BACS21DX1B		
		OPTIONAL PART:		
		BACS21DD1B		
		USED ON:		
		285U0048-20		
45	285U0048-2	...PANEL-FRONT	103106	1
		SUPPLIER CODE:		
		V89954		
49	NAS514P440-4P	...SCREW	103106	1
53	BRH10A04	...NUT-	103106	1
		SUPPLIER CODE:		
		V52828		
		SPECIFICATION NUMBER:		
		BACN10JC04		
		OPTIONAL PART:		
		NS202101-40		
		V80539		
		RMLH9075-40W		
		V72962		
		VN303A40		
		V92215		
		96-40		
		V80539		
		T6S440J		
		V11815		
		H10-04BAC		
		V15653		
		USED ON:		
		285U0048-10		
		285U0048-7		
		285U0048-1		

MISSING ITEM NUMBERS NOT APPLICABLE

– ITEM NOT ILLUSTRATED

BOEING PROPRIETARY - Copyright © - Unpublished Work - See title page for details.

FIG ITEM	PART NUMBER	1 2 3 4 5 6 7 NOMENCLATURE	EFFECT FROM TO	UNITS PER ASSY
78				
53	BRH10A04	...NUT- SUPPLIER CODE: V52828 SPECIFICATION NUMBER: BACN10JC04 OPTIONAL PART: NS202101-40 V80539 RMLH9075-40W V72962 VN303A40 V92215 96-40 V80539 T6S440J V11815 H10-04BAC V15653 BACN10JC04CD USED ON: 285U0048-20	103106	1
53	BRH10C04D	...NUT- SUPPLIER CODE: V52828 SPECIFICATION NUMBER: BACN10JC04CD OPTIONAL PART: H51650-04BAC V15653 102LH9075-40W V72962 NS202486-40 V80539 T6C440JCD V11815 T6C440JCD V11815 BACN10JC04 USED ON: 285U0048-20	103106	1
57	285U0048-6	...BRACKET- SUPPLIER CODE: V89954 USED ON: 285U0048-1 285U0048-7	103106	1

MISSING ITEM NUMBERS NOT APPLICABLE

– ITEM NOT ILLUSTRATED

BOEING PROPRIETARY - Copyright © - Unpublished Work - See title page for details.

FIG ITEM	PART NUMBER	1 2 3 4 5 6 7 NOMENCLATURE	EFFECT FROM TO	UNITS PER ASSY
78				
57	285U0048-15	...BRACKET- SUPPLIER CODE: V89954 USED ON: 285U0048-10 285U0048-20	103106	1
61	110193	..GASKET- SUPPLIER CODE: V4U656 OPTIONAL PART: 121092 V4U656	103106	1
61	121092	..GASKET- SUPPLIER CODE: V4U656 OPTIONAL PART: 110193 V4U656	103106	1
61	92288	..GASKET- SUPPLIER CODE: V12595	103106	1
65	285U0051-6	..PANEL-REAR SUPPLIER CODE: V89954	103106	1
69	285T0022-51	.PANEL ASSY-AUDIO SELECTOR SUPPLIER CODE: V89954 ELECTRICAL EQUIP NUMBER: M00070 M00071 COMPONENT MAINT MANUAL REF: 23-51-05 FOR OTHER SYS DETAILS SEE: 11-31-05-66F 23-51-01-05 33-13-01-07	103106	2
73	BAC27TEX4053	..MARKER-ALUMINUM FOIL SUPPLIER CODE: V89954	103106	1
77	S906-10207-2	..LABEL	103106	3
81	S906-10207-4	..LABEL	103106	1
85	MS24693C2	..SCREW	103106	14
89	MS51957-13	..SCREW	103106	6
93	285T0142-5	..COVER- SUPPLIER CODE: V89954	103106	1
97	285T0142-7	..COVER- SUPPLIER CODE: V89954	103106	1

MISSING ITEM NUMBERS NOT APPLICABLE

— ITEM NOT ILLUSTRATED

BOEING PROPRIETARY - Copyright © - Unpublished Work - See title page for details.

FIG ITEM	PART NUMBER	1 2 3 4 5 6 7 NOMENCLATURE	EFFECT FROM TO	UNITS PER ASSY
78				
101	285T0148-1	..PANEL ASSY-FRONT SUPPLIER CODE: V89954 QUALIFIED OPTIONAL DATA: 285T0148-1 OPTIONAL TO 285T0148-2 WHEN USED WITH ASSOCIATED PARTS	103106	RF
101	285T0148-2	..PANEL ASSY-FRONT SUPPLIER CODE: V89954 QUALIFIED OPTIONAL DATA: 285T0148-1 OPTIONAL TO 285T0148-2 WHEN USED WITH ASSOCIATED PARTS	103106	RF
105	285T0149-1	...GASKET- SUPPLIER CODE: V89954 USED ON: 285T0148-1	103106	1
105	285T0149-3	...GASKET- SUPPLIER CODE: V89954 USED ON: 285T0148-2	103106	1
109	285T0149-2	...GASKET- SUPPLIER CODE: V89954 USED ON: 285T0148-1	103106	2
109	285T0149-4	...GASKET- SUPPLIER CODE: V89954 USED ON: 285T0148-2	103106	2
113	285T0142-1	...PANEL ASSY- SUPPLIER CODE: V89954 USED ON: 285T0148-1	103106	1
113	285T0142-23	...PANEL ASSY- SUPPLIER CODE: V89954 USED ON: 285T0148-2	103106	1
117	9-125-0502-105	....STUD ASSY- SUPPLIER CODE: V12324	103106	4

MISSING ITEM NUMBERS NOT APPLICABLE

— ITEM NOT ILLUSTRATED

BOEING PROPRIETARY - Copyright © - Unpublished Work - See title page for details.

FIG ITEM	PART NUMBER	1 2 3 4 5 6 7 NOMENCLATURE	EFFECT FROM TO	UNITS PER ASSY
78				
121	SF10F4CBB4D	....NUT-PRESS SUPPLIER CODE: V12324 OPTIONAL PART: S0S440-8 V46384	103106	2
121	S0S440-8	....SPACER-THREADED SUPPLIER CODE: V46384 OPTIONAL PART: SF10F4CBB4D V12324	103106	2
125	285T0142-2	....PANEL- SUPPLIER CODE: V89954 USED ON: 285T0142-1	103106	1
125	285T0142-24	....PANEL- SUPPLIER CODE: V89954 USED ON: 285T0142-23	103106	1
129	285T0142-3	..ENCLOSURE ASSY- SUPPLIER CODE: V89954	103106	1
133	233N6204-301	.PANEL ASSY-FIRE/OVERHEAT TEST SUPPLIER CODE: V89954 COMPONENT MAINT MANUAL REF: 26-11-52 QUALIFIED I/W DATA: THE 233N6204-301 PANEL ASSY IS I/W THE 233N6204-15 PANEL ASSY T/W THE S233T100-5508 LIGHTPLATE. FOR OTHER SYS DETAILS SEE: 26-11-02-01 26-12-51-03 26-17-51-06 33-13-01-07	103106	1

MISSING ITEM NUMBERS NOT APPLICABLE

— ITEM NOT ILLUSTRATED

BOEING PROPRIETARY - Copyright © - Unpublished Work - See title page for details.

FIG ITEM	PART NUMBER	1 2 3 4 5 6 7 NOMENCLATURE	EFFECT FROM TO	UNITS PER ASSY
78				
137	233T6204-301	.PANEL ASSY-FIRE/OVERHEAT TEST SUPPLIER CODE: V89954 COMPONENT MAINT MANUAL REF: 26-11-51 QUALIFIED I/W DATA: 233T6204-301 PANEL ASSY IS I/W 233T6204-13 PANEL ASSY T/W S233T100-538 LIGHTPLATE FOR OTHER SYS DETAILS SEE: 26-11-02-01 26-17-51-06 33-13-01-07	103106	1
- 141	233N6204-15	..PANEL ASSY- SUPPLIER CODE: V89954 ELECTRICAL EQUIP NUMBER: M10445 COMPONENT MAINT MANUAL REF: 26-11-52 QUALIFIED I/W DATA: THE 233N6204-301 PANEL ASSY IS I/W THE 233N6204-15 PANEL ASSY T/W THE S233T100-5508 LIGHTPLATE. USED ON: 233N6204-301	103106	RF
- 145	233T6204-13	..PANEL ASSY- SUPPLIER CODE: V89954 ELECTRICAL EQUIP NUMBER: M10445 COMPONENT MAINT MANUAL REF: 26-11-51 QUALIFIED I/W DATA: 233T6204-301 PANEL ASSY IS I/W 233T6204-13 PANEL ASSY T/W S233T100-538 LIGHTPLATE USED ON: 233T6204-301	103106	RF

MISSING ITEM NUMBERS NOT APPLICABLE

- ITEM NOT ILLUSTRATED

BOEING PROPRIETARY - Copyright © - Unpublished Work - See title page for details.

	FIG ITEM	PART NUMBER	1 2 3 4 5 6 7 NOMENCLATURE	EFFECT FROM TO	UNITS PER ASSY
	78				
R	- 145	233T6204-16	..PANEL ASSY-	103106	RF
R			SUPPLIER CODE:		
R			V89954		
R			ELECTRICAL EQUIP NUMBER:		
R			M10445		
R			COMPONENT MAINT MANUAL REF:		
R			26-11-51		
R			USED ON:		
R			233T6204-301		
	149	NAS514P632-5	...SCREW-	103106	3
			USED ON:		
			233N6204-15		
	153	NAS514P632-5	...SCREW-	103106	3
			USED ON:		
			233T6204-13		
	157	NAS1801-06-5	...SCREW-	103106	3
			OPTIONAL PART:		
			BACS12HN06-5		
			USED ON:		
			233N6204-15		
	157	BACS12HN06-5	...SCREW-	103106	3
			OPTIONAL PART:		
			NAS1801-06-5		
			USED ON:		
			233N6204-15		
	161	BACS12CK06U5	...SCREW-	103106	3
			USED ON:		
			233T6204-13		
	165	MS35338-41	...WASHER-	103106	3
			OPTIONAL PART:		
			BACW10EC06S		
			USED ON:		
			233N6204-15		
	165	BACW10EC06S	...WASHER-	103106	3
			OPTIONAL PART:		
			MS35338-41		
			USED ON:		
			233N6204-15		
	169	BACW10EC06CD	...WASHER-	103106	3
			USED ON:		
			233T6204-13		
	173	69B46200-14	...STANDOFF-	103106	3
			USED ON:		
			233N6204-15		
	177	69B46200-11	...STANDOFF-	103106	3
			USED ON:		
			233T6204-13		

MISSING ITEM NUMBERS NOT APPLICABLE

- ITEM NOT ILLUSTRATED

BOEING PROPRIETARY - Copyright © - Unpublished Work - See title page for details.

FIG ITEM	PART NUMBER	1 2 3 4 5 6 7 NOMENCLATURE	EFFECT FROM TO	UNITS PER ASSY
78				
181	233N3250-40	...BRACKET-SPRT USED ON: 233N6204-15	103106	1
185	233T6200-64	...BRACKET-SPRT USED ON: 233T6204-13	103106	1
189	233N6204-11	...BASEPLATE ASSY- SUPPLIER CODE: V89954 USED ON: 233N6204-15	103106	1
193	233T6204-10	...BASEPLATE ASSY- SUPPLIER CODE: V89954 USED ON: 233T6204-13	103106	1
197	PFSC35-38ASEMB	....STUD ASSY- SUPPLIER CODE: V72794 SPECIFICATION NUMBER: BACS21DX1B USED ON: 233N6204-11	103106	4
201	BACS21DD1B	....STUD ASSY- SUPPLIER CODE: V08524 SPECIFICATION NUMBER: BACS21DD1B USED ON: 233T6204-10	103106	4
205	SF6G6CBB5D	....NUT- SUPPLIER CODE: V12324 SPECIFICATION NUMBER: BACN10PA06-6 USED ON: 233N6204-11	103106	2
209	SF6G6CBB5D	....NUT- SUPPLIER CODE: V12324 SPECIFICATION NUMBER: BACN10PA06-6 USED ON: 233T6204-10	103106	2
213	233N6204-12	....BASEPLATE- SUPPLIER CODE: V89954 USED ON: 233N6204-11	103106	1

MISSING ITEM NUMBERS NOT APPLICABLE

– ITEM NOT ILLUSTRATED

BOEING PROPRIETARY - Copyright © - Unpublished Work - See title page for details.

FIG ITEM	PART NUMBER	1 2 3 4 5 6 7 NOMENCLATURE	EFFECT FROM TO	UNITS PER ASSY
78				
217	BACP10U0187	....BASEPLATE-	103106	1
		USED ON:		
		233T6204-10		
221	233N6205-12	.PANEL ASSY-ENG FIRE CONT	103106	1
		SUPPLIER CODE:		
		V89954		
		ELECTRICAL EQUIP NUMBER:		
		M10443		
		COMPONENT MAINT MANUAL REF:		
		26-15-41		
		FOR OTHER SYS DETAILS SEE:		
		26-11-54-02A		
		26-21-01-02		
225	NAS514P632-5	..SCREW	103106	3
233	NAS1801-06-5	..SCREW	103106	3
237	233N6205-16	..BRACKET ASSY-	103106	1
		SUPPLIER CODE:		
		V89954		
		ATTACHING PARTS		
- 241	NAS1801-04-4	..SCREW	103106	6
		-------*-------		
245	BACG20ZA0208	...GROMMET	103106	2
249	233N3250-61	..BRACKET-SPRT	103106	1
253	69B46200-29	..STANDOFF	103106	1
257	233N6205-17	..STANDOFF-	103106	2
		SUPPLIER CODE:		
		V89954		
261	233N6205-13	..BASEPLATE ASSY-	103106	1
		SUPPLIER CODE:		
		V89954		
264	SF6GXBAS8D	...PIN-	103106	2
		SUPPLIER CODE:		
		V12324		
269	BACP10U0450T	.PANEL ASSY	103106	1
273	BACP10U0037T	.PANEL ASSY	103106	1

MISSING ITEM NUMBERS NOT APPLICABLE

- ITEM NOT ILLUSTRATED

BOEING PROPRIETARY - Copyright © - Unpublished Work - See title page for details.

FIG ITEM	PART NUMBER	1 2 3 4 5 6 7 NOMENCLATURE	EFFECT FROM TO	UNITS PER ASSY
78				
275	G6992-12	.PANEL ASSY-ATC/TCAS MODE S CONT (CUSTOMER FURNISHED) SUPPLIER CODE: V99837 FUNCTIONAL DESCRIPTION: PROVIDES SELECTION OF A 4-DIGIT REPLY CODE FOR ONE OR TWO ATC/MODE S TRANSPONDER ENABLES TRANSPONDER AND TCAS TO BE SET TO TEST STANDBY TRANSPONDER ONLY FULL TCAS OR TRAFFIC ADVISORY ONLY MODE OF OPERATION ELECTRICAL EQUIP NUMBER: M10140 COMPONENT MAINT MANUAL REF: 34-50-22 FOR BREAKDOWN SEE: 34-53-02-02	103106	RF
277	285T0553-4	.PANEL ASSY-ILS CONT SUPPLIER CODE: V89954 ELECTRICAL EQUIP NUMBER: M00087 COMPONENT MAINT MANUAL REF: 34-31-61 FOR OTHER SYS DETAILS SEE: 11-31-05-66F 33-13-01-07 34-31-02-02	103106	1
277	285T0553-1	.PANEL ASSY-ILS CONT SUPPLIER CODE: V89954 ELECTRICAL EQUIP NUMBER: M00087 COMPONENT MAINT MANUAL REF: 34-31-61 FOR OTHER SYS DETAILS SEE: 11-31-05-66F 33-13-01-07 34-31-02-02	103106	1

MISSING ITEM NUMBERS NOT APPLICABLE

– ITEM NOT ILLUSTRATED

BOEING PROPRIETARY - Copyright © - Unpublished Work - See title page for details.

FIG ITEM	PART NUMBER	1 2 3 4 5 6 7 NOMENCLATURE	EFFECT FROM TO	UNITS PER ASSY
78				
277	285T0553-2	.PANEL ASSY-ILS CONT SUPPLIER CODE: V89954 ELECTRICAL EQUIP NUMBER: M00087 COMPONENT MAINT MANUAL REF: 34-31-61 FOR OTHER SYS DETAILS SEE: 11-31-05-66F 33-13-01-07 34-31-02-02	103106	1
277	285T0553-3	.PANEL ASSY-ILS CONT SUPPLIER CODE: V89954 ELECTRICAL EQUIP NUMBER: M00087 FOR OTHER SYS DETAILS SEE: 11-31-05-66F 33-13-01-07 34-31-02-02	103106	1
281	BAC27TEX3465	..MARKER-ALUMINUM FOIL SUPPLIER CODE: V89954 QUALIFIED OPTIONAL DATA: BAC27TEX3465 OR BAC27TEX4173 OR BAC27TEX4812 ARE ALL OPT WHEN USED WITH ASSOCIATED ITEMS USED ON: 285T0553-4	103106	1
281	BAC27TEX3465	..MARKER-ALUMINUM FOIL SUPPLIER CODE: V89954 USED ON: 285T0553-1 285T0553-2 285T0553-3	103106	1
285	BAC27TEX4173	..MARKER-ALUMINUM FOIL SUPPLIER CODE: V89954 QUALIFIED OPTIONAL DATA: BAC27TEX3465 OR BAC27TEX4173 OR BAC27TEX4812 ARE ALL OPT WHEN USED WITH ASSOCIATED ITEMS USED ON: 285T0553-4	103106	1

MISSING ITEM NUMBERS NOT APPLICABLE

– ITEM NOT ILLUSTRATED

BOEING PROPRIETARY - Copyright © - Unpublished Work - See title page for details.

FIG ITEM	PART NUMBER	1 2 3 4 5 6 7 NOMENCLATURE	EFFECT FROM TO	UNITS PER ASSY
78				
289	BAC27TEX4812	..MARKER-ALUMINUM FOIL SUPPLIER CODE: V89954 QUALIFIED OPTIONAL DATA: BAC27TEX3465 OR BAC27TEX4173 OR BAC27TEX4812 ARE ALL OPT WHEN USED WITH ASSOCIATED ITEMS USED ON: 285T0553-4	103106	1
293	NAS1801-04-5	..SCREW	103106	12
297	NAS514P440-4P	..SCREW	103106	4
301	NAS514P440-5P	..SCREW	103106	12
305	MS35206-202	..SCREW	103106	4
309	MS35338-40	..WASHER	103106	8
313	AN960-4L	..WASHER	103106	8
317	285T0549-1	..COVER ASSY- SUPPLIER CODE: V89954	103106	2
321	285T0546-1	..PANEL-REAR SUPPLIER CODE: V89954	103106	1
325	285T0550-13	..PANEL ASSY-SIDE SUPPLIER CODE: V89954 OPTIONAL PART: 285T0550-1 V89954 285T0550-9 V89954	103106	1
325	285T0550-1	..PANEL ASSY-SIDE SUPPLIER CODE: V89954 OPTIONAL PART: 285T0550-9 V89954 285T0550-13 V89954	103106	1
325	285T0550-9	..PANEL ASSY-SIDE SUPPLIER CODE: V89954 OPTIONAL PART: 285T0550-13 V89954 285T0550-1 V89954	103106	1

MISSING ITEM NUMBERS NOT APPLICABLE

– ITEM NOT ILLUSTRATED

BOEING PROPRIETARY - Copyright © - Unpublished Work - See title page for details.

FIG ITEM	PART NUMBER	1 2 3 4 5 6 7 NOMENCLATURE	EFFECT FROM TO	UNITS PER ASSY
78				
329	285T0550-14	..PANEL ASSY-SIDE SUPPLIER CODE: V89954 OPTIONAL PART: 285T0550-2 V89954 285T0550-10 V89954	103106	1
329	285T0550-2	..PANEL ASSY-SIDE SUPPLIER CODE: V89954 OPTIONAL PART: 285T0550-10 V89954 285T0550-14 V89954	103106	1
329	285T0550-10	..PANEL ASSY-SIDE SUPPLIER CODE: V89954 OPTIONAL PART: 285T0550-14 V89954 285T0550-2 V89954	103106	1
333	BACN10XR04	...NUTPLATE- USED ON: 285T0550-13 285T0550-14 ATTACHING PARTS	103106	4
- 337	BACR15BA2AD	...RIVET- SIZE DETERMINED ON INSTL. -------*-------	103106	8
341	LAC440-1	...NUT- SUPPLIER CODE: V46384 USED ON: 285T0550-1 285T0550-2 285T0550-9 285T0550-10	103106	4
345	F22A27M22-40	...NUT- SUPPLIER CODE: V0217B ATTACHING PARTS	103106	2
- 349	BACR15BA2AD	...RIVET- SIZE DETERMINED ON INSTL. -------*-------	103106	4

MISSING ITEM NUMBERS NOT APPLICABLE

- ITEM NOT ILLUSTRATED

BOEING PROPRIETARY - Copyright © - Unpublished Work - See title page for details.

FIG ITEM	PART NUMBER	1 2 3 4 5 6 7 NOMENCLATURE	EFFECT FROM TO	UNITS PER ASSY
78				
353	FE0440EF	...NUT-PRESS SUPPLIER CODE: V46384	103106	2
357	FE0440EF	...NUT-PRESS SUPPLIER CODE: V46384 USED ON: 285T0550-9 285T0550-10 285T0550-13 285T0550-14	103106	4
357	FE0X440	...NUT-PRESS SUPPLIER CODE: V46384 USED ON: 285T0550-1 285T0550-2	103106	4
361	285T0550-17	...PANEL- SUPPLIER CODE: V89954 USED ON: 285T0550-13	103106	1
361	285T0550-5	...PANEL- SUPPLIER CODE: V89954 USED ON: 285T0550-1 285T0550-9	103106	1
365	285T0550-18	...PANEL- SUPPLIER CODE: V89954 USED ON: 285T0550-14	103106	1
365	285T0550-6	...PANEL- SUPPLIER CODE: V89954 USED ON: 285T0550-2 285T0550-10	103106	1
369	285T0558-3	..MODULE ASSY-ELECT. SUPPLIER CODE: V89954 QUALIFIED OPTIONAL DATA: 285T0558-3 OPT TO 285T0558-10 WHEN USED WITH ASSOCIATED ITEMS USED ON: 285T0553-4	103106	1

MISSING ITEM NUMBERS NOT APPLICABLE

– ITEM NOT ILLUSTRATED

BOEING PROPRIETARY - Copyright © - Unpublished Work - See title page for details.

FIG ITEM	PART NUMBER	1 2 3 4 5 6 7 NOMENCLATURE	EFFECT FROM TO	UNITS PER ASSY
78				
369	285T0558-10	..MODULE ASSY-ELECT. SUPPLIER CODE: V89954 QUALIFIED OPTIONAL DATA: 285T0558-3 OPT TO 285T0558-10 WHEN USED WITH ASSOCIATED ITEMS USED ON: 285T0553-4	103106	1
369	285T0558-1	..MODULE ASSY-ELECT. SUPPLIER CODE: V89954 USED ON: 285T0553-4	103106	1
369	285T0558-2	..MODULE ASSY-ELECT. SUPPLIER CODE: V89954 USED ON: 285T0553-4	103106	1
369	285T0558-1	..MODULE ASSY-ELECT. SUPPLIER CODE: V89954 USED ON: 285T0553-1 285T0553-3	103106	1
369	285T0558-2	..MODULE ASSY-ELECT. SUPPLIER CODE: V89954 QUALIFIED OPTIONAL DATA: 285T0558-2 OPT TO 285T0558-9 WHEN USED WITH ASSOCIATED ITEMS USED ON: 285T0553-2	103106	1
369	285T0558-9	..MODULE ASSY-ELECT. SUPPLIER CODE: V89954 QUALIFIED OPTIONAL DATA: 285T0558-2 OPT TO 285T0558-9 WHEN USED WITH ASSOCIATED ITEMS USED ON: 285T0553-2	103106	1
369	285T0558-1	..MODULE ASSY-ELECT. SUPPLIER CODE: V89954 USED ON: 285T0553-2	103106	1

MISSING ITEM NUMBERS NOT APPLICABLE

– ITEM NOT ILLUSTRATED

BOEING PROPRIETARY - Copyright © - Unpublished Work - See title page for details.

FIG ITEM	PART NUMBER	1 2 3 4 5 6 7 NOMENCLATURE	EFFECT FROM TO	UNITS PER ASSY
78				
373	285T0566-1	...PMD ASSY- SUPPLIER CODE: V89954	103106	3
377	BAC27TEX2007	....DECAL- OPTIONAL PART: WHB673-1-0X0-5 V85480 DAT59-652 V85480	103106	1
377	WHB673-1-0X0-5	....DECAL- SUPPLIER CODE: V85480 OPTIONAL PART: BAC27TEX2007 DAT59-652 V85480	103106	1
377	DAT59-652	....DECAL- SUPPLIER CODE: V85480 OPTIONAL PART: BAC27TEX2007 WHB673-1-0X0-5 V85480	103106	1
381	285T0548-1	..PANEL ASSY-FRONT SUPPLIER CODE: V89954	103106	1
385	BACS21DD1B	...STUD ASSY SUPPLIER CODE: V08524 SPECIFICATION NUMBER: BACS21DD1B	103106	4
389	SF6G6CBB5D	...NUT SUPPLIER CODE: V12324 SPECIFICATION NUMBER: BACN10PA06-6	103106	2
393	U256-1	...NUT-PRESS SUPPLIER CODE: V46384	103106	8
397	285T0548-11	...PANEL- SUPPLIER CODE: V89954	103106	1
401	WCS225-7	..SEAL ASSY-SHAFT SUPPLIER CODE: V51074	103106	2

MISSING ITEM NUMBERS NOT APPLICABLE

– ITEM NOT ILLUSTRATED

BOEING PROPRIETARY - Copyright © - Unpublished Work - See title page for details.

FIG ITEM	PART NUMBER	1 2 3 4 5 6 7 NOMENCLATURE	EFFECT FROM TO	UNITS PER ASSY
78				
405	285T0580-1	..GASKET-LCD MODULE SUPPLIER CODE: V89954 QUALIFIED OPTIONAL DATA: 285T0580-1 OPT TO 285T0580-2 WHEN USED WITH ASSOCIATED ITEMS USED ON: 285T0553-4	103106	2
405	285T0580-2	..GASKET ASSY-LCD MODULE SUPPLIER CODE: V89954 QUALIFIED OPTIONAL DATA: 285T0580-1 OPT TO 285T0580-2 WHEN USED WITH ASSOCIATED ITEMS USED ON: 285T0553-4	103106	2
405	285T0580-1	..GASKET-LCD MODULE SUPPLIER CODE: V89954 USED ON: 285T0553-1 285T0553-2 285T0553-3	103106	2
409	285T1151-1	..GASKET- SUPPLIER CODE: V89954 QUALIFIED OPTIONAL DATA: 285T1151-1 OPT TO 285T1151-2 WHEN USED WITH ASSOCIATED ITEMS USED ON: 285T0553-4	103106	2
409	285T1151-2	..GASKET- SUPPLIER CODE: V89954 QUALIFIED OPTIONAL DATA: 285T1151-1 OPT TO 285T1151-2 WHEN USED WITH ASSOCIATED ITEMS USED ON: 285T0553-4	103106	2

MISSING ITEM NUMBERS NOT APPLICABLE

— ITEM NOT ILLUSTRATED

BOEING PROPRIETARY - Copyright © - Unpublished Work - See title page for details.

FIG ITEM	PART NUMBER	1 2 3 4 5 6 7 NOMENCLATURE	EFFECT FROM TO	UNITS PER ASSY
78				
413	285T0020-8	.PANEL ASSY-ILS CONT	103106	1
		SUPPLIER CODE:		
		V89954		
		ELECTRICAL EQUIP NUMBER:		
		M00087		
		COMPONENT MAINT MANUAL REF:		
		34-31-51		
		FOR OTHER SYS DETAILS SEE:		
		11-31-05-66F		
		33-13-01-07		
		34-31-02-02		
417	BAC27TEX0934	..MARKER-ALUMINUM FOIL	103106	1
		SUPPLIER CODE:		
		V89954		
421	NAS514P440-4P	..SCREW	103106	10
425	NAS514P440-5P	..SCREW	103106	6
429	S233-2	..SEAL-	103106	1
		SUPPLIER CODE:		
		V51896		
		OPTIONAL PART:		
		S233-9		
		V51896		
429	S233-9	..SEAL-	103106	1
		SUPPLIER CODE:		
		V51896		
		OPTIONAL PART:		
		S233-2		
		V51896		
433	285T0082-10	..MODULE ASSY-FRONT	103106	1
		SUPPLIER CODE:		
		V89954		
		OPTIONAL PART:		
		285T0082-14		
		V89954		
433	285T0082-14	..MODULE ASSY-FRONT	103106	1
		SUPPLIER CODE:		
		V89954		
		OPTIONAL PART:		
		285T0082-10		
		V89954		
437	MS35206-202	...SCREW	103106	4
441	WCS225-3	...SEAL ASSY-	103106	2
		SUPPLIER CODE:		
		V51074		
		OPTIONAL PART:		
		WCS225-7		
		V51074		

MISSING ITEM NUMBERS NOT APPLICABLE

– ITEM NOT ILLUSTRATED

BOEING PROPRIETARY - Copyright © - Unpublished Work - See title page for details.

FIG ITEM	PART NUMBER	1 2 3 4 5 6 7 NOMENCLATURE	EFFECT FROM TO	UNITS PER ASSY
78				
441	WCS225-7	...SEAL ASSY-	103106	2
		SUPPLIER CODE:		
		V51074		
		OPTIONAL PART:		
		WCS225-3		
		V51074		
445	285T0440-1	...PANEL ASSY-	103106	1
		SUPPLIER CODE:		
		V89954		
		USED ON:		
		285T0082-10		
445	285T0440-22	...PANEL ASSY-	103106	1
		SUPPLIER CODE:		
		V89954		
		USED ON:		
		285T0082-14		
449	NAS514P440-5P	....SCREW	103106	2
453	92-1660-40	....NUT	103106	2
		SUPPLIER CODE:		
		V72962		
		SPECIFICATION NUMBER:		
		BACN10DN40		
		OPTIONAL PART:		
		92-1660-440		
		V15653		
457	SF6G6CBB5D	....NUT	103106	4
		SUPPLIER CODE:		
		V12324		
		SPECIFICATION NUMBER:		
		BACN10PA06-6		
461	BACS21DD1B	....STUD ASSY	103106	4
		SUPPLIER CODE:		
		V08524		
		SPECIFICATION NUMBER:		
		BACS21DD1B		
465	285T0440-5	....PANEL-	103106	1
		SUPPLIER CODE:		
		V89954		
		USED ON:		
		285T0440-1		
465	285T0440-23	....PANEL-	103106	1
		SUPPLIER CODE:		
		V89954		
		USED ON:		
		285T0440-22		
469	285T0438-1	....CHASSIS ASSY-UPR	103106	1
		SUPPLIER CODE:		
		V89954		

MISSING ITEM NUMBERS NOT APPLICABLE

– ITEM NOT ILLUSTRATED

BOEING PROPRIETARY - Copyright © - Unpublished Work - See title page for details.

FIG ITEM	PART NUMBER	1 2 3 4 5 6 7 NOMENCLATURE	EFFECT FROM TO	UNITS PER ASSY
78				
473	F22A27M22-40	.....NUT-ANCHOR SUPPLIER CODE: V0217B ATTACHING PARTS	103106	2
- 477	BACR15BA2AD	.....RIVET- SIZE DETERMINED ON INSTL. -------*-------	103106	4
481	285T0439-3	..PANEL-SIDE SUPPLIER CODE: V89954	103106	1
485	285T0439-4	..PANEL-SIDE SUPPLIER CODE: V89954	103106	1
489	285T0081-10	..MODULE ASSY-REAR SUPPLIER CODE: V89954	103106	1
493	285T0250-4	...PMD ASSY- SUPPLIER CODE: V89954	103106	3
497	BAC27TEX2007	....DECAL- OPTIONAL PART: WHB673-1D0X0D5 V85480	103106	1
497	WHB673-1D0X0D5	....DECAL- SUPPLIER CODE: V85480 OPTIONAL PART: BAC27TEX2007	103106	1
503	NAS514P440-4P	...SCREW	103106	1
507	NAS514P440-7P	...SCREW	103106	1
511	NAS43DD0-8	...SPACER	103106	1
515	8214B0440HL	...SPACER-THREADED SUPPLIER CODE: V06540	103106	1
519	NAS620-4L	...WASHER	103106	1
523	285T0439-1	...CHASSIS ASSY- SUPPLIER CODE: V89954	103106	1
527	NAS1801-04-5	....SCREW	103106	1
531	AN960D4L	....WASHER	103106	3
535	F22A27M22-40	....NUT-ANCHOR SUPPLIER CODE: V0217B ATTACHING PARTS	103106	4
- 539	BACR15BB2AD	....RIVET- SIZE DETERMINED ON INSTL. -------*-------	103106	8

MISSING ITEM NUMBERS NOT APPLICABLE

- ITEM NOT ILLUSTRATED

BOEING PROPRIETARY - Copyright © - Unpublished Work - See title page for details.

FIG ITEM	PART NUMBER	1 2 3 4 5 6 7 NOMENCLATURE	EFFECT FROM TO	UNITS PER ASSY
78				
543	285T0439-6	....BRACKET ASSY- SUPPLIER CODE: V89954	103106	1
547	285T0439-2	....SUPPORT ASSY- SUPPLIER CODE: V89954 ATTACHING PARTS	103106	1
- 551	BACR15BA3AD	....RIVET- SIZE DETERMINED ON INSTL. -------*-------	103106	5
555	RMF9201M40	.....NUTPLATE SUPPLIER CODE: V72962 SPECIFICATION NUMBER: BACN10JN04 OPTIONAL PART: BRFM20A04L V52828 MF1000-04BAC V15653 NS103218-40 V80539 MF53049-04 V15653 T8124S04S V11815 VN252A40L V92215	103106	3
559	T8077S440	.....NUTPLATE SUPPLIER CODE: V11815 SPECIFICATION NUMBER: BACN10JP04B OPTIONAL PART: MK2000-04BAC V15653 NS103198-40 V80539 RMA9207M40 V72962 VN201A1-40L V92215 BRM100A04L V52828 ATTACHING PARTS	103106	1
- 563	BACR15BA3AD	.....RIVET- SIZE DETERMINED ON INSTL. -------*-------	103106	8

MISSING ITEM NUMBERS NOT APPLICABLE

- ITEM NOT ILLUSTRATED

BOEING PROPRIETARY - Copyright © - Unpublished Work - See title page for details.

FIG ITEM	PART NUMBER	1 2 3 4 5 6 7 NOMENCLATURE	EFFECT FROM TO	UNITS PER ASSY
78				
567	285T0439-17	.....SUPPORT- SUPPLIER CODE: V89954	103106	1
571	285T0439-5	....CHASSIS- SUPPLIER CODE: V89954	103106	1
575	285T0524-6	.PANEL ASSY-ILS CONT SUPPLIER CODE: V89954 ELECTRICAL EQUIP NUMBER: M00087 COMPONENT MAINT MANUAL REF: 34-31-52 FOR OTHER SYS DETAILS SEE: 11-31-05-66F 33-13-01-07 34-31-02-02	103106	1
579	BAC27TEX2825	..MARKER-ALUMINUM FOIL SUPPLIER CODE: V89954	103106	1
583	MS35206-202	..SCREW	103106	4
587	NAS514P440-6P	..SCREW	103106	4
591	NAS1801-04-5	..SCREW	103106	2
595	AN960-4L	..WASHER	103106	2
599	92-1660-40	..NUT SUPPLIER CODE: V72962 SPECIFICATION NUMBER: BACN10DN40 OPTIONAL PART: 92-1660-440 V15653	103106	2
603	S233-13	..SEAL- SUPPLIER CODE: V51896 OPTIONAL PART: S233-6 V51896	103106	1
603	S233-6	..SEAL- SUPPLIER CODE: V51896 OPTIONAL PART: S233-13 V51896	103106	1
607	WCS225-7	..SEAL ASSY-SHAFT SUPPLIER CODE: V51074	103106	2

MISSING ITEM NUMBERS NOT APPLICABLE

– ITEM NOT ILLUSTRATED

BOEING PROPRIETARY - Copyright © - Unpublished Work - See title page for details.

FIG ITEM	PART NUMBER	1 2 3 4 5 6 7 NOMENCLATURE	EFFECT FROM TO	UNITS PER ASSY
78				
611	285T0525-3	..MODULE ASSY-ELECT. SUPPLIER CODE: V89954	103106	1
- 615	285T0525-4	...MODULE ASSY- SUPPLIER CODE: V89954	103106	1
619	285T0250-4	....PMD ASSY- SUPPLIER CODE: V89954	103106	3
623	BAC27TEX2007	.....DECAL- OPTIONAL PART: WHB673-1D0X0D5 V85480	103106	1
623	WHB673-1D0X0D5	.....DECAL- SUPPLIER CODE: V85480 OPTIONAL PART: BAC27TEX2007	103106	1
627	285T0530-1	..ENCLOSURE ASSY- SUPPLIER CODE: V89954 OPTIONAL PART: 285T0530-2 V89954	103106	1
627	285T0530-2	..ENCLOSURE ASSY- SUPPLIER CODE: V89954 OPTIONAL PART: 285T0530-1 V89954	103106	1
631	NAS1801-04-5	...SCREW	103106	4
635	NAS514P440-4P	...SCREW	103106	4
639	NAS514P440-5P	...SCREW	103106	12
643	AN960D4	...WASHER	103106	4
647	285T0529-1	...COVER ASSY-SHELL SUPPLIER CODE: V89954	103106	2
651	285T0528-1	...PANEL ASSY-FRONT SUPPLIER CODE: V89954 USED ON: 285T0530-1	103106	1
651	285T0528-3	...PANEL ASSY-FRONT SUPPLIER CODE: V89954 USED ON: 285T0530-2	103106	1

MISSING ITEM NUMBERS NOT APPLICABLE

- ITEM NOT ILLUSTRATED

BOEING PROPRIETARY - Copyright © - Unpublished Work - See title page for details.

FIG ITEM	PART NUMBER	1 2 3 4 5 6 7 NOMENCLATURE	EFFECT FROM TO	UNITS PER ASSY
78				
655	BACS21DD1B	....STUD ASSY SUPPLIER CODE: V08524 SPECIFICATION NUMBER: BACS21DD1B	103106	4
659	SF6G6CBB5D	....NUT SUPPLIER CODE: V12324 SPECIFICATION NUMBER: BACN10PA06-6	103106	4
663	285T0528-2	....PANEL- SUPPLIER CODE: V89954 USED ON: 285T0528-1	103106	1
663	285T0528-4	....PANEL- SUPPLIER CODE: V89954 USED ON: 285T0528-3	103106	1
667	285T0529-3	...PANEL ASSY-SIDE SUPPLIER CODE: V89954	103106	1
671	285T0529-4	...PANEL ASSY-SIDE SUPPLIER CODE: V89954	103106	1
675	RMF9201M40	....NUTPLATE SUPPLIER CODE: V72962 SPECIFICATION NUMBER: BACN10JN04 OPTIONAL PART: BRFM20A04L V52828 MF1000-04BAC V15653 NS103218-40 V80539 MF53049-04 V15653 T8124S04S V11815 VN252A40L V92215 ATTACHING PARTS	103106	4
- 679	BACR15BA3AD	....RIVET- SIZE DETERMINED ON INSTL. -------*-------	103106	8

MISSING ITEM NUMBERS NOT APPLICABLE

- ITEM NOT ILLUSTRATED

BOEING PROPRIETARY - Copyright © - Unpublished Work - See title page for details.

FIG ITEM	PART NUMBER	1 2 3 4 5 6 7 NOMENCLATURE	EFFECT FROM TO	UNITS PER ASSY
78				
683	F22A27M22-40	....NUT-ANCHOR SUPPLIER CODE: V0217B ATTACHING PARTS	103106	4
- 687	BACR15BA2AD	....RIVET- SIZE DETERMINED ON INSTL. -------*-------	103106	8
691	285T0529-5	....PANEL- SUPPLIER CODE: V89954 USED ON: 285T0529-3	103106	1
695	285T0529-6	....PANEL- SUPPLIER CODE: V89954 USED ON: 285T0529-4	103106	1
699	285T0527-1	...PANEL-REAR SUPPLIER CODE: V89954	103106	1
703	362-021-002	.INDICATOR ASSY-RUD TRIM SUPPLIER CODE: V26055 FUNCTIONAL DESCRIPTION: DISPLAYS RUDDER TRIM POSITION AS NOSE LEFT AND RIGHT UNITS SPECIFICATION NUMBER: S231T282-2 ELECTRICAL EQUIP NUMBER: N00083 COMPONENT MAINT MANUAL REF: 27-20-01 FOR BREAKDOWN SEE: 27-28-02-01A	103106	RF
707	233N6203-355	.PANEL ASSY-APU/CARGO FIRE CONT SUPPLIER CODE: V89954 FOR OTHER SYS DETAILS SEE: 26-22-03-03 26-23-52-04A 33-13-01-07	103106	1

MISSING ITEM NUMBERS NOT APPLICABLE

– ITEM NOT ILLUSTRATED

BOEING PROPRIETARY - Copyright © - Unpublished Work - See title page for details.

	FIG ITEM	PART NUMBER	1 2 3 4 5 6 7 NOMENCLATURE	EFFECT FROM TO	UNITS PER ASSY
	78				
	- 715	233N6203-252	..PANEL ASSY-	103106	RF
			SUPPLIER CODE:		
			V89954		
			ELECTRICAL EQUIP NUMBER:		
			M10444		
			COMPONENT MAINT MANUAL REF:		
			26-15-51		
	727	NAS1801-06-5	...SCREW-	103106	4
			OPTIONAL PART:		
			BACS12HN06-5		
	727	BACS12HN06-5	...SCREW-	103106	4
			OPTIONAL PART:		
			NAS1801-06-5		
	731	FH6C5TPKL12BN	...SCREW-	103106	4
			SUPPLIER CODE:		
			V12324		
R	735	BACW10EC06S	...WASHER	103106	4
	739	69B46200-15	...STANDOFF	103106	4
	743	233N6203-2	...BASEPLATE ASSY-	103106	1
			SUPPLIER CODE:		
			V89954		
	751	SF6G6CBB5D	....NUT	103106	3
			SUPPLIER CODE:		
			V12324		
			SPECIFICATION NUMBER:		
			BACN10PA06-6		
R	755	PFSC35-38ASEMB	....STUD ASSY	103106	4
R			SUPPLIER CODE:		
R			V72794		
R			SPECIFICATION NUMBER:		
R			BACS21DX1B		
	759	233N6203-3	....BASEPLATE-	103106	1
			SUPPLIER CODE:		
			V89954		
	765	233N6203-6	...BRACKET ASSY-	103106	1
			SUPPLIER CODE:		
			V89954		
	775	BACP10U0600T	.PANEL ASSY	103106	1
	779	BACP10U0037T	.PANEL ASSY	103106	1

MISSING ITEM NUMBERS NOT APPLICABLE

– ITEM NOT ILLUSTRATED

BOEING PROPRIETARY - Copyright © - Unpublished Work - See title page for details.

	FIG ITEM	PART NUMBER	1 2 3 4 5 6 7 NOMENCLATURE	EFFECT FROM TO	UNITS PER ASSY
	78				
R	782	233T6201-324	.PANEL ASSY-AIL./RUD TRIM	103106	1
R			SUPPLIER CODE:		
R			V89954		
R			FUNCTIONAL DESCRIPTION:		
R			CONTROLS AILERON RUDDER		
R			TRIM AND DISPLAYS TRIM		
R			ANGLE.		
R			COMPONENT MAINT MANUAL REF:		
R			27-21-63		
R			QUALIFIED I/W DATA:		
R			THE 233T6201-324 PANEL		
R			ASSY IS I/W THE		
R			233T6201-21 PANEL ASSY		
R			T/W THE S233T100-528		
R			LIGHTPLATE AND SA808-101		
R			KNOB		
R			FOR OTHER SYS DETAILS SEE:		
R			27-11-23-03		
R			27-21-23-03		
R			33-13-01-07		
	- 785	233T6201-21	..PANEL ASSY-	103106	RF
			SUPPLIER CODE:		
			V89954		
			ELECTRICAL EQUIP NUMBER:		
			M00074		
			COMPONENT MAINT MANUAL REF:		
			27-21-63		
			QUALIFIED I/W DATA:		
			THE 233T6201-324 PANEL		
			ASSY IS I/W THE		
			233T6201-21 PANEL ASSY		
			T/W THE S233T100-528		
			LIGHTPLATE AND SA808-101		
			KNOB		
	788	NAS514P632-5	...SCREW	103106	7
	791	NAS1801-06-5	...SCREW	103106	3
	794	MS35338-41	...WASHER	103106	3
	797	233T6201-15	...BASEPLATE ASSY-	103106	1
			SUPPLIER CODE:		
			V89954		
	800	BACS21DD1B	....STUD ASSY	103106	4
			SUPPLIER CODE:		
			V08524		
			SPECIFICATION NUMBER:		
			BACS21DD1B		

MISSING ITEM NUMBERS NOT APPLICABLE

- ITEM NOT ILLUSTRATED

BOEING PROPRIETARY - Copyright © - Unpublished Work - See title page for details.

FIG ITEM	PART NUMBER	1 2 3 4 5 6 7 NOMENCLATURE	EFFECT FROM TO	UNITS PER ASSY
78				
803	SF6G6CBB5D	....NUT SUPPLIER CODE: V12324 SPECIFICATION NUMBER: BACN10PA06-6	103106	3
806	233T6201-16	....BASEPLATE- SUPPLIER CODE: V89954	103106	1
809	233T6201-20	...SHROUD ASSY- SUPPLIER CODE: V89954	103106	1
812	MF6001-06	....NUTPLATE SUPPLIER CODE: V15653 SPECIFICATION NUMBER: BACN10KJ06CM ATTACHING PARTS	103106	4
- 815	BACR15BA3AD	....RIVET- SIZE DETERMINED ON INSTL. -------*-------	103106	8
818	69B46200-7	...STANDOFF	103106	3
821	233T6200-38	...BRACKET-SPRT	103106	1
824	285T0557-1	.PANEL ASSY-DUAL ADF CONT SUPPLIER CODE: V89954 ELECTRICAL EQUIP NUMBER: M01046 COMPONENT MAINT MANUAL REF: 34-57-62 FOR OTHER SYS DETAILS SEE: 11-31-05-66F 33-13-01-07 34-57-02-03	103106	1
826	BAC27TEX3471	..MARKER- SUPPLIER CODE: V89954 QUALIFIED OPTIONAL DATA: BAC27TEX3471 IS OPT TO BAC27TEX4182 WHEN USED WITH ASSOCIATED PARTS	103106	1
828	BAC27TEX4182	..MARKER- SUPPLIER CODE: V89954 QUALIFIED OPTIONAL DATA: BAC27TEX3471 IS OPT TO BAC27TEX4182 WHEN USED WITH ASSOCIATED PARTS	103106	1
830	MS35206-202	..SCREW	103106	4
832	NAS514P440-4P	..SCREW	103106	4

MISSING ITEM NUMBERS NOT APPLICABLE

- ITEM NOT ILLUSTRATED

BOEING PROPRIETARY - Copyright © - Unpublished Work - See title page for details.

FIG ITEM	PART NUMBER	1 2 3 4 5 6 7 NOMENCLATURE	EFFECT FROM TO	UNITS PER ASSY
78				
834	NAS514P440-5P	..SCREW	103106	10
836	NAS1801-04-5	..SCREW	103106	12
838	MS35338-40	..WASHER	103106	8
840	AN960-4L	..WASHER	103106	8
842	WCS225-5	..SEAL ASSY-	103106	2
		SUPPLIER CODE:		
		V51074		
		QUALIFIED OPTIONAL DATA:		
		WCS225-5 OPT TO WCS225-9		
		WHEN USED WITH		
		ASSOCIATED PARTS		
842	WCS225-9	..SEAL ASSY-	103106	2
		SUPPLIER CODE:		
		V51074		
		QUALIFIED OPTIONAL DATA:		
		WCS225-5 OPT TO WCS225-9		
		WHEN USED WITH		
		ASSOCIATED PARTS		
844	285T0580-2	..GASKET ASSY-LCD MODULE	103106	2
		SUPPLIER CODE:		
		V89954		
		OPTIONAL PART:		
		285T0580-1		
		V89954		
844	285T0580-1	..GASKET-LCD MODULE	103106	2
		SUPPLIER CODE:		
		V89954		
		OPTIONAL PART:		
		285T0580-2		
		V89954		
846	285T1151-2	..GASKET-	103106	2
		SUPPLIER CODE:		
		V89954		
		QUALIFIED OPTIONAL DATA:		
		285T1151-1 OPT TO		
		285T1151-2 WHEN USED		
		WITH ASSOCIATED PARTS		
846	285T1151-1	..GASKET-	103106	2
		SUPPLIER CODE:		
		V89954		
		QUALIFIED OPTIONAL DATA:		
		285T1151-1 OPT TO		
		285T1151-2 WHEN USED		
		WITH ASSOCIATED PARTS		
848	285T0549-2	..COVER ASSY-	103106	2
		SUPPLIER CODE:		
		V89954		

MISSING ITEM NUMBERS NOT APPLICABLE

– ITEM NOT ILLUSTRATED

BOEING PROPRIETARY - Copyright © - Unpublished Work - See title page for details.

FIG ITEM	PART NUMBER	1 2 3 4 5 6 7 NOMENCLATURE	EFFECT FROM TO	UNITS PER ASSY
78				
850	285T0548-6	..PANEL ASSY-FRONT SUPPLIER CODE: V89954	103106	1
852	BACS21DD1B	...STUD ASSY SUPPLIER CODE: V08524 SPECIFICATION NUMBER: BACS21DD1B	103106	4
854	SF6G6CBB5D	...NUT SUPPLIER CODE: V12324 SPECIFICATION NUMBER: BACN10PA06-6	103106	2
856	U256-1	...NUT-PRESS SUPPLIER CODE: V46384	103106	8
858	285T0548-16	...PANEL- SUPPLIER CODE: V89954	103106	1
860	285T0550-15	..PANEL ASSY-SIDE SUPPLIER CODE: V89954 OPTIONAL PART: 285T0550-3 V89954 285T0550-11 V89954	103106	1
860	285T0550-11	..PANEL ASSY-SIDE SUPPLIER CODE: V89954 OPTIONAL PART: 285T0550-3 V89954 285T0550-15 V89954	103106	1
860	285T0550-3	..PANEL ASSY-SIDE SUPPLIER CODE: V89954 OPTIONAL PART: 285T0550-11 V89954 285T0550-15 V89954	103106	1

MISSING ITEM NUMBERS NOT APPLICABLE

– ITEM NOT ILLUSTRATED

BOEING PROPRIETARY - Copyright © - Unpublished Work - See title page for details.

FIG ITEM	PART NUMBER	1 2 3 4 5 6 7 NOMENCLATURE	EFFECT FROM TO	UNITS PER ASSY
78				
862	285T0550-16	..PANEL ASSY-SIDE SUPPLIER CODE: V89954 OPTIONAL PART: 285T0550-4 V89954 285T0550-12 V89954	103106	1
862	285T0550-12	..PANEL ASSY-SIDE SUPPLIER CODE: V89954 OPTIONAL PART: 285T0550-4 V89954 285T0550-16 V89954	103106	1
862	285T0550-4	..PANEL ASSY-SIDE SUPPLIER CODE: V89954 OPTIONAL PART: 285T0550-12 V89954 285T0550-16 V89954	103106	1
864	FE0440EF	...NUT-PRESS SUPPLIER CODE: V46384	103106	2
866	FE0440EF	...NUT-PRESS SUPPLIER CODE: V46384 USED ON: 285T0550-11 285T0550-12 285T0550-15 285T0550-16	103106	4
866	FE0X440	...NUT-PRESS SUPPLIER CODE: V46384 USED ON: 285T0550-3 285T0550-4	103106	4
868	LAC440-1	...NUT-PRESS SUPPLIER CODE: V46384 USED ON: 285T0550-3 285T0550-4 285T0550-11 285T0550-12	103106	4

MISSING ITEM NUMBERS NOT APPLICABLE

– ITEM NOT ILLUSTRATED

BOEING PROPRIETARY - Copyright © - Unpublished Work - See title page for details.

FIG ITEM	PART NUMBER	1 2 3 4 5 6 7 NOMENCLATURE	EFFECT FROM TO	UNITS PER ASSY
78				
870	BACN10XR04	...NUTPLATE- USED ON: 285T0550-15 285T0550-16 ATTACHING PARTS	103106	4
- 872	BACR15BA2AD	...RIVET- SIZE DETERMINED ON INSTL. USED ON: 285T0550-15 285T0550-16 -------*-------	103106	8
874	F22A27M22-40	...NUT-ANCHOR SUPPLIER CODE: V0217B ATTACHING PARTS	103106	2
- 876	BACR15BA2AD	...RIVET- SIZE DETERMINED ON INSTL. -------*-------	103106	4
878	285T0550-19	...PANEL- SUPPLIER CODE: V89954 USED ON: 285T0550-15	103106	1
878	285T0550-7	...PANEL- SUPPLIER CODE: V89954 USED ON: 285T0550-3 285T0550-11	103106	1
880	285T0550-20	...PANEL- SUPPLIER CODE: V89954 USED ON: 285T0550-16	103106	1
880	285T0550-8	...PANEL- SUPPLIER CODE: V89954 USED ON: 285T0550-4 285T0550-12	103106	1
882	285T0561-1	..MODULE ASSY-ELECT. SUPPLIER CODE: V89954	103106	1
884	285T0569-1	...DEVICE ASSY-PROGRAMMED MEMORY SUPPLIER CODE: V89954	103106	2

MISSING ITEM NUMBERS NOT APPLICABLE

- ITEM NOT ILLUSTRATED

BOEING PROPRIETARY - Copyright © - Unpublished Work - See title page for details.

FIG ITEM	PART NUMBER	1 2 3 4 5 6 7 NOMENCLATURE	EFFECT FROM TO	UNITS PER ASSY
78				
886	BAC27TEX2007	....DECAL- OPTIONAL PART: WHB673-1D0X0D5 V85480	103106	1
886	WHB673-1D0X0D5	....DECAL- SUPPLIER CODE: V85480 OPTIONAL PART: BAC27TEX2007	103106	1
888	285T0546-3	..PANEL-REAR SUPPLIER CODE: V89954	103106	1
890	285T0537-1	.PANEL ASSY-ADF CONT SUPPLIER CODE: V89954 ELECTRICAL EQUIP NUMBER: M01046 COMPONENT MAINT MANUAL REF: 34-57-53 FOR OTHER SYS DETAILS SEE: 11-31-05-66F 33-13-01-07 34-57-02-03	103106	1
892	BAC27TEX3153	..MARKER- SUPPLIER CODE: V89954	103106	1
894	MS35206-202	..SCREW	103106	4
895	NAS514P440-6P	..SCREW	103106	4
896	NAS1801-04-6	..SCREW	103106	3
897	AN960-4L	..WASHER	103106	3
898	S233-14	..SEAL- SUPPLIER CODE: V51896 OPTIONAL PART: S233-7 V51896	103106	1
898	S233-7	..SEAL- SUPPLIER CODE: V51896 OPTIONAL PART: S233-14 V51896	103106	1
900	WCS225-5	..SEAL ASSY-SHAFT SUPPLIER CODE: V51074	103106	2

MISSING ITEM NUMBERS NOT APPLICABLE

– ITEM NOT ILLUSTRATED

BOEING PROPRIETARY - Copyright © - Unpublished Work - See title page for details.

FIG ITEM	PART NUMBER	1 2 3 4 5 6 7 NOMENCLATURE	EFFECT FROM TO	UNITS PER ASSY
78				
902	285T0450-4	..ENCLOSURE ASSY- SUPPLIER CODE: V89954 OPTIONAL PART: 285T0450-2 V89954	103106	1
902	285T0450-2	..ENCLOSURE ASSY- SUPPLIER CODE: V89954 OPTIONAL PART: 285T0450-4 V89954	103106	1
904	NAS1801-04-5	...SCREW	103106	4
906	NAS514P440-5P	...SCREW	103106	22
908	NAS514P440-7P	...SCREW	103106	1
910	285T0449-1	...COVER-UPR SUPPLIER CODE: V89954	103106	1
912	285T0449-9	...COVER ASSY-LWR SUPPLIER CODE: V89954	103106	1
914	285T0448-9	...PANEL ASSY-FRONT SUPPLIER CODE: V89954 USED ON: 285T0450-4	103106	1
914	285T0448-4	...PANEL ASSY-FRONT SUPPLIER CODE: V89954 USED ON: 285T0450-2	103106	1
916	BACS21DD1B	....STUD ASSY SUPPLIER CODE: V08524 SPECIFICATION NUMBER: BACS21DD1B	103106	4
918	SF6G6CBB5D	....NUT SUPPLIER CODE: V12324 SPECIFICATION NUMBER: BACN10PA06-6	103106	5
920	285T0451-1	....CLIP- SUPPLIER CODE: V89954 ATTACHING PARTS	103106	1
- 922	BACR15BA2AD	....RIVET- SIZE DETERMINED ON INSTL. -------*-------	103106	2

MISSING ITEM NUMBERS NOT APPLICABLE

- ITEM NOT ILLUSTRATED

BOEING PROPRIETARY - Copyright © - Unpublished Work - See title page for details.

FIG ITEM	PART NUMBER	1 2 3 4 5 6 7 NOMENCLATURE	EFFECT FROM TO	UNITS PER ASSY
78				
924	RMF9201M40	....NUTPLATE SUPPLIER CODE: V72962 SPECIFICATION NUMBER: BACN10JN04 OPTIONAL PART: BRFM20A04L V52828 MF1000-04BAC V15653 NS103218-40 V80539 MF53049-04 V15653 T8124S04S V11815 VN252A40L V92215 ATTACHING PARTS	103106	1
- 926	BACR15BA3AD	....RIVET- SIZE DETERMINED ON INSTL. -------*-------	103106	2
928	285T0448-10	....PANEL- SUPPLIER CODE: V89954 USED ON: 285T0448-9	103106	1
928	285T0448-5	....PANEL- SUPPLIER CODE: V89954 USED ON: 285T0448-4	103106	1
930	285T0449-4	...PANEL ASSY-SIDE SUPPLIER CODE: V89954	103106	1

MISSING ITEM NUMBERS NOT APPLICABLE

- ITEM NOT ILLUSTRATED

BOEING PROPRIETARY - Copyright © - Unpublished Work - See title page for details.

FIG ITEM	PART NUMBER	1 2 3 4 5 6 7 NOMENCLATURE	EFFECT FROM TO	UNITS PER ASSY
78				
932	RMF9201M40	....NUTPLATE SUPPLIER CODE: V72962 SPECIFICATION NUMBER: BACN10JN04 OPTIONAL PART: BRFM20A04L V52828 MF1000-04BAC V15653 NS103218-40 V80539 MF53049-04 V15653 T8124S04S V11815 VN252A40L V92215 ATTACHING PARTS	103106	6
- 934	BACR15BA3AD	....RIVET- SIZE DETERMINED ON INSTL. -------*-------	103106	12
936	F22A27M22-40	....NUT-ANCHOR SUPPLIER CODE: V0217B ATTACHING PARTS	103106	3
- 938	BACR15BA2AD	....RIVET- SIZE DETERMINED ON INSTL. -------*-------	103106	6
940	285T0447-5	....CLIP- SUPPLIER CODE: V89954	103106	1
942	285T0449-8	....PANEL- SUPPLIER CODE: V89954	103106	1
944	285T0449-11	...PANEL ASSY-SIDE SUPPLIER CODE: V89954	103106	1

MISSING ITEM NUMBERS NOT APPLICABLE

- ITEM NOT ILLUSTRATED

BOEING PROPRIETARY - Copyright © - Unpublished Work - See title page for details.

FIG ITEM	PART NUMBER	1 2 3 4 5 6 7 NOMENCLATURE	EFFECT FROM TO	UNITS PER ASSY
78				
946	RMF9201M40	....NUTPLATE SUPPLIER CODE: V72962 SPECIFICATION NUMBER: BACN10JN04 OPTIONAL PART: BRFM20A04L V52828 MF1000-04BAC V15653 NS103218-40 V80539 MF53049-04 V15653 T8124S04S V11815 VN252A40L V92215 ATTACHING PARTS	103106	5
- 948	BACR15BA3AD	....RIVET- SIZE DETERMINED ON INSTL. -------*-------	103106	10
950	F22A27M22-40	....NUT-ANCHOR SUPPLIER CODE: V0217B ATTACHING PARTS	103106	3
- 952	BACR15BA2AD	....RIVET- SIZE DETERMINED ON INSTL. -------*-------	103106	6
954	285T0447-5	....CLIP- SUPPLIER CODE: V89954	103106	1
956	285T0449-12	....PANEL- SUPPLIER CODE: V89954	103106	1
958	285T0447-1	...PANEL ASSY-REAR SUPPLIER CODE: V89954	103106	1
960	F22A27M22-40	....NUT-ANCHOR SUPPLIER CODE: V0217B ATTACHING PARTS	103106	3
- 962	BACR15BB2AD	....RIVET- SIZE DETERMINED ON INSTL. -------*-------	103106	6
964	285T0447-4	....CLIP- SUPPLIER CODE: V89954	103106	1

MISSING ITEM NUMBERS NOT APPLICABLE

- ITEM NOT ILLUSTRATED

BOEING PROPRIETARY - Copyright © - Unpublished Work - See title page for details.

FIG ITEM	PART NUMBER	1 2 3 4 5 6 7 NOMENCLATURE	EFFECT FROM TO	UNITS PER ASSY
78				
966	285T0447-3	....SPACER-	103106	1
		SUPPLIER CODE:		
		V89954		
968	285T0447-2	....PANEL-	103106	1
		SUPPLIER CODE:		
		V89954		
970	285T0446-1	...SUPPORT ASSY-PWR SUPPLY	103106	1
		SUPPLIER CODE:		
		V89954		
972	TC140	....PLATE-MTG	103106	1
		SUPPLIER CODE:		
		V59730		
		SPECIFICATION NUMBER:		
		STBP19M1		
		ATTACHING PARTS		
- 974	NAS600-6P	....SCREW	103106	1
		-------*-------		
976	TC140	....PLATE-MTG	103106	2
		SUPPLIER CODE:		
		V59730		
		SPECIFICATION NUMBER:		
		STBP19M1		
		ATTACHING PARTS		
- 978	MS20470A4-6	....RIVET	103106	2
		-------*-------		
980	F22A27M22-40	....NUT-ANCHOR	103106	1
		SUPPLIER CODE:		
		V0217B		
		ATTACHING PARTS		
- 982	BACR15BB2AD	....RIVET-	103106	2
		SIZE DETERMINED ON INSTL.		
		-------*-------		

MISSING ITEM NUMBERS NOT APPLICABLE

- ITEM NOT ILLUSTRATED

BOEING PROPRIETARY - Copyright © - Unpublished Work - See title page for details.

FIG ITEM	PART NUMBER	1 2 3 4 5 6 7 NOMENCLATURE	EFFECT FROM TO	UNITS PER ASSY
78				
984	RMF9201M40	....NUTPLATE SUPPLIER CODE: V72962 SPECIFICATION NUMBER: BACN10JN04 OPTIONAL PART: BRFM20A04L V52828 MF1000-04BAC V15653 NS103218-40 V80539 MF53049-04 V15653 T8124S04S V11815 VN252A40L V92215 ATTACHING PARTS	103106	8
- 986	BACR15BA3AD	....RIVET- SIZE DETERMINED ON INSTL. -------*-------	103106	16
988	285T0446-2	....BRACKET-SPRT SUPPLIER CODE: V89954	103106	1
990	285T0445-5	..MODULE ASSY-ELECT. SUPPLIER CODE: V89954	103106	1
- 992	285T0445-6	...MODULE ASSY- SUPPLIER CODE: V89954	103106	RF
994	285T0253-5	....PMD ASSY- SUPPLIER CODE: V89954	103106	2
996	BAC27TEX2007	.....DECAL- OPTIONAL PART: WHB673-10X05 V85480	103106	1
996	WHB673-10X05	.....DECAL- SUPPLIER CODE: V85480 OPTIONAL PART: BAC27TEX2007	103106	1

MISSING ITEM NUMBERS NOT APPLICABLE

- ITEM NOT ILLUSTRATED

BOEING PROPRIETARY - Copyright © - Unpublished Work - See title page for details.

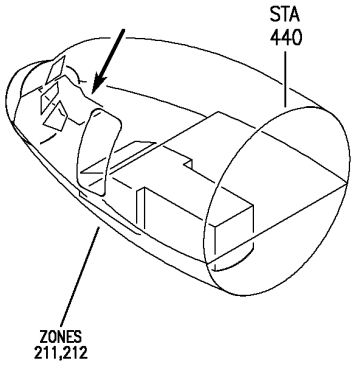

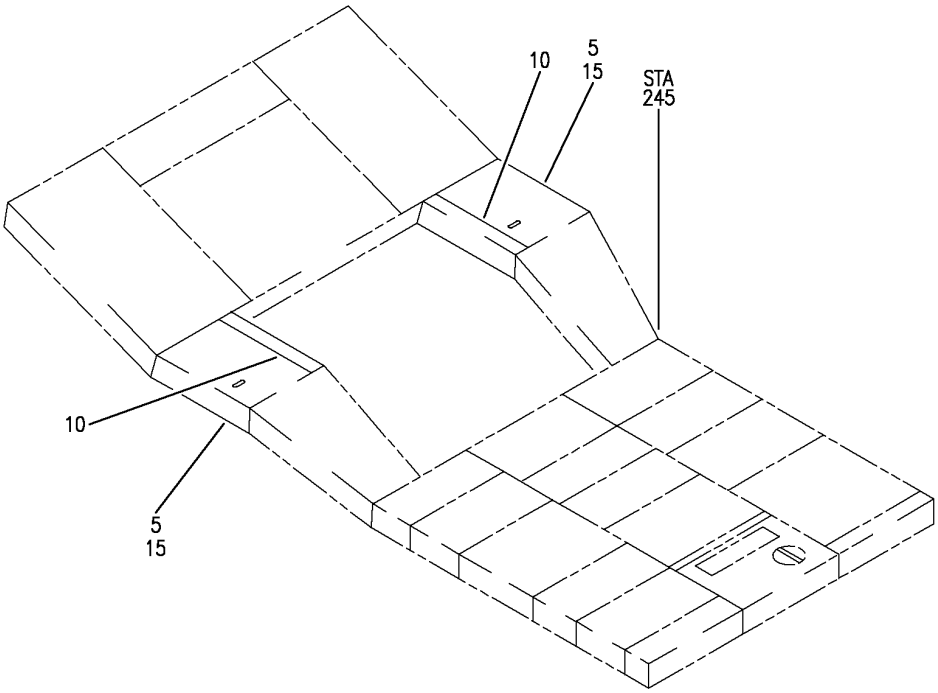

Y 31114101 REV 327

PANEL INSTL-P10 STAND QUADRANT (INDICATING/RECORDING ONLY)
FIGURE 1

BOEING PROPRIETARY - Copyright © - Unpublished Work - See title page for details.

FIG ITEM	PART NUMBER	1 2 3 4 5 6 7 NOMENCLATURE	EFFECT FROM TO	UNITS PER ASSY
1				
		PANEL INSTL-P10	002004	
		STAND QUADRANT	006100	
		(INDICATING/RECORDING	107107	
		ONLY)	121503	
			904999	
- 1	233N6101-1	PANEL INSTL-P10	002004	RF
		STAND QUADRANT	006100	
		(INDICATING/RECORDING	107107	
		ONLY)	121503	
		VARIABLE DRAWING REF:	904999	
		233N6101-5004		
		233N6101-5028		
		233N6101-5041		
		233N6101-5042		
		233N6101-5046		
		FOR NHA/OTHER SYS DET SEE:		
		25-10-00-05A		
5	622-5048-104	.PANEL ASSY-ELECTRONIC	107107	RF
		FLIGHT INSTR CONT	904949	
		SUPPLIER CODE:		
		V4V792		
		SPECIFICATION NUMBER:		
		S242T404-304		
		ELECTRICAL EQUIP NUMBER:		
		M00093		
		M00094		
		COMPONENT MAINT MANUAL REF:		
		34-22-72		
		QUALIFIED I/W DATA:		
		622-5048-104 I/W		
		622-5048-344 UNTIL		
		ACTIVATION OF TCAS AT		
		WHICH TIME 622-5048-344		
		MUST BE INSTALLED		
		FOR BREAKDOWN SEE:		
		34-22-02-01		

MISSING ITEM NUMBERS NOT APPLICABLE

- ITEM NOT ILLUSTRATED

BOEING PROPRIETARY - Copyright © - Unpublished Work - See title page for details.

FIG ITEM	PART NUMBER	1 2 3 4 5 6 7 NOMENCLATURE	EFFECT FROM TO	UNITS PER ASSY
1				
5	622-5048-341	.PANEL ASSY-ELECTRONIC FLIGHT INSTR CONT SUPPLIER CODE: V4V792 SPECIFICATION NUMBER: S242T404-341 ELECTRICAL EQUIP NUMBER: M00093 M00094 WIRING DIAGRAM REF: 342214 342224 COMPONENT MAINT MANUAL REF: 34-22-72 QUALIFIED I/W DATA: 622-5048-101 I/W 622-5048-341 UNTIL WHEN THE TCAS SYSTEM IS ACTIVATED ON EFIS P/N 622-5048-341 MUST BE INSTALLED. 622-5048-344 I/W 622-5048-341 SUBJECT TO CUSTOMER PREFERENCE FOR UAL ONLY. PRE SERVICE BULLETIN: 34-0200 PRE SERVICE BULLETIN: EFIC-701-34-D V4V792 PRE SERVICE LETTER: 34-122 FOR BREAKDOWN SEE: 34-22-02-01	002004 006100 952999	RF

MISSING ITEM NUMBERS NOT APPLICABLE

– ITEM NOT ILLUSTRATED

BOEING PROPRIETARY - Copyright © - Unpublished Work - See title page for details.

FIG ITEM	PART NUMBER	1 2 3 4 5 6 7 NOMENCLATURE	EFFECT FROM TO	UNITS PER ASSY
1				
5	622-5048-344	.PANEL ASSY-ELECTRONIC FLIGHT INSTR CONT SUPPLIER CODE: V4V792 SPECIFICATION NUMBER: S242T404-344 ELECTRICAL EQUIP NUMBER: M00093 M00094 COMPONENT MAINT MANUAL REF: 34-22-72 QUALIFIED I/W DATA: 622-5048-104 I/W 622-5048-344 UNTIL ACTIVATION OF TCAS AT WHICH TIME 622-5048-344 MUST BE INSTALLED 622-5048-344 I/W 622-5048-341 SUBJECT TO CUSTOMER PREFERENCE FOR UAL ONLY FOR BREAKDOWN SEE: 34-22-02-01	121503 904951	RF
5	622-5048-381	.PANEL ASSY-EFIS CONT SUPPLIER CODE: V4V792 SPECIFICATION NUMBER: S242T404-381 ELECTRICAL EQUIP NUMBER: M00093 M00094 WIRING DIAGRAM REF: 342214 342224 COMPONENT MAINT MANUAL REF: 34-22-72 POST SERVICE BULLETIN: 34-0200 POST SERVICE BULLETIN: EFIC-701-34-D V4V792 POST SERVICE LETTER: 34-122 FOR BREAKDOWN SEE: 34-22-02-01	952952	RF

MISSING ITEM NUMBERS NOT APPLICABLE

— ITEM NOT ILLUSTRATED

BOEING PROPRIETARY - Copyright © - Unpublished Work - See title page for details.

FIG ITEM	PART NUMBER	1 2 3 4 5 6 7 NOMENCLATURE	EFFECT FROM TO	UNITS PER ASSY
1				
10	233T6100-13	.PANEL-	002004	2
		ALTERED FROM PART NUMBER:	006100	
		BACP10U0112T	107107	
			121503	
			904999	

MISSING ITEM NUMBERS NOT APPLICABLE

– ITEM NOT ILLUSTRATED

BOEING PROPRIETARY - Copyright © - Unpublished Work - See title page for details.

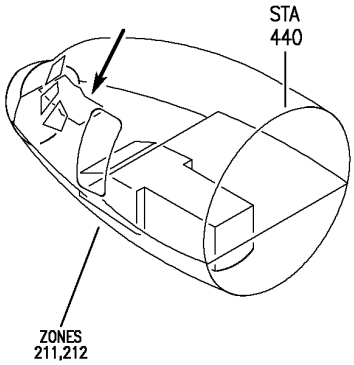

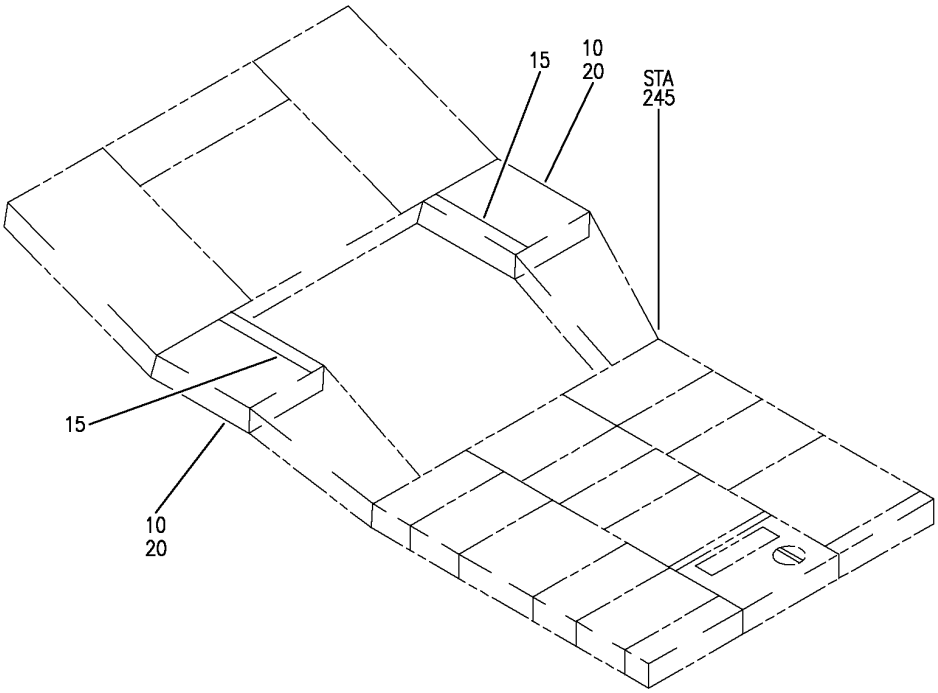

Y 31114102 REV 327

PANEL INSTL-P10 ELECTRONICS (PILOTS' CONTROL STAND ONLY)
FIGURE 2

BOEING PROPRIETARY - Copyright © - Unpublished Work - See title page for details.

FIG ITEM	PART NUMBER	1 2 3 4 5 6 7 NOMENCLATURE	EFFECT FROM TO	UNITS PER ASSY
2		PANEL INSTL-P10 ELECTRONICS (PILOTS' CONTROL STAND ONLY)	101106 108120 504903	
- 2	233N6103-28	PANEL INSTL-P10 ELECTRONICS (PILOTS' CONTROL STAND ONLY) FOR NHA/OTHER SYS DET SEE: 25-10-00-15B	101101	RF
- 2	233N6103-128	PANEL INSTL-P10 ELECTRONICS (PILOTS' CONTROL STAND ONLY) FOR NHA/OTHER SYS DET SEE: 25-10-00-15B	102102	RF
- 4	233N6103-122	PANEL INSTL-P10 ELECTRONICS (PILOTS' CONTROL STAND ONLY) FOR NHA/OTHER SYS DET SEE: 25-10-00-15B	504903	RF
- 6	233N6103-62	PANEL INSTL-P10 ELECTRONICS (PILOTS' CONTROL STAND ONLY) FOR NHA/OTHER SYS DET SEE: 25-10-00-15B	108120	RF

MISSING ITEM NUMBERS NOT APPLICABLE

- ITEM NOT ILLUSTRATED

BOEING PROPRIETARY - Copyright © - Unpublished Work - See title page for details.

FIG ITEM	PART NUMBER	1 2 3 4 5 6 7 NOMENCLATURE	EFFECT FROM TO	UNITS PER ASSY
2				
- 7	MODREF33990	PANEL INSTL-P10 ELECTRONICS (PILOTS' CONTROL STAND ONLY) MODULE NUMBER: 233N6103-253 REV B FOR OTHER SYS DETAILS SEE: 11-31-05-66F 23-12-02-03 23-51-01-05 26-11-02-01 26-11-54-02A 26-12-51-03 26-17-51-06 26-21-01-02 26-22-03-03 26-23-52-04A 27-11-23-03 27-21-23-03 27-28-02-01A 31-41-03-02 33-13-01-07 34-22-02-03 34-31-02-02 34-43-02-02 34-53-02-02 34-57-02-03 34-61-02-03 FOR ADDITIONAL DETAILS SEE: 31-11-31-02 31-11-36-78	103106	1
10	622-5048-381	.PANEL ASSY-EFIS CONT SUPPLIER CODE: V4V792 SPECIFICATION NUMBER: S242T404-381 ELECTRICAL EQUIP NUMBER: M00093 M00094 COMPONENT MAINT MANUAL REF: 34-22-72 FOR BREAKDOWN SEE: 34-22-02-03	102106 108120 504903	RF

MISSING ITEM NUMBERS NOT APPLICABLE

– ITEM NOT ILLUSTRATED

BOEING PROPRIETARY - Copyright © - Unpublished Work - See title page for details.

FIG ITEM	PART NUMBER	1 2 3 4 5 6 7 NOMENCLATURE	EFFECT FROM TO	UNITS PER ASSY
2				
10	622-5048-341	.PANEL ASSY-EFIS CONT SUPPLIER CODE: V4V792 SPECIFICATION NUMBER: S242T404-341 ELECTRICAL EQUIP NUMBER: M00093 M00094 COMPONENT MAINT MANUAL REF: 34-22-72 QUALIFIED I/W DATA: 622-5048-101 I/W 622-5048-341 UNTIL WHEN THE TCAS SYSTEM IS ACTIVATED ON EFIS P/N 622-5048-341 MUST BE INSTALLED. 622-5048-344 I/W 622-5048-341 SUBJECT TO CUSTOMER PREFERENCE FOR UAL ONLY. FOR BREAKDOWN SEE: 34-22-02-03	101101	RF
15	233T6100-13	.PANEL- ALTERED FROM PART NUMBER: BACP10U0112T	101106 108120 504903	2

MISSING ITEM NUMBERS NOT APPLICABLE

– ITEM NOT ILLUSTRATED

BOEING PROPRIETARY - Copyright © - Unpublished Work - See title page for details.

OVERHEAD PANELS

BOEING PROPRIETARY - Copyright © - Unpublished Work - See title page for details.

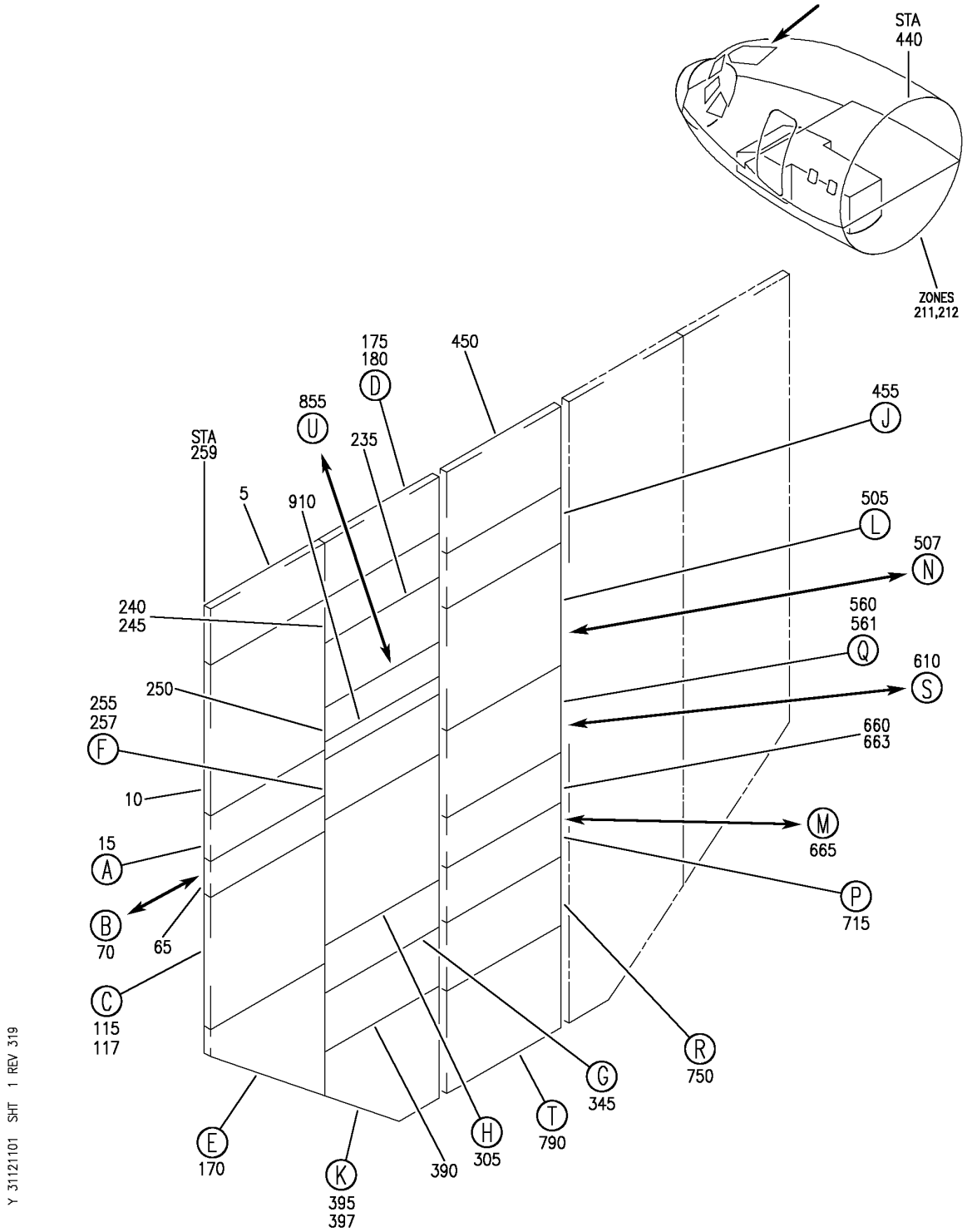

PANEL INSTL-P5 OVHD (INDICATING/RECORDING SYSTEMS ONLY)
FIGURE 1 (SHEET 1)

BOEING PROPRIETARY - Copyright © - Unpublished Work - See title page for details.

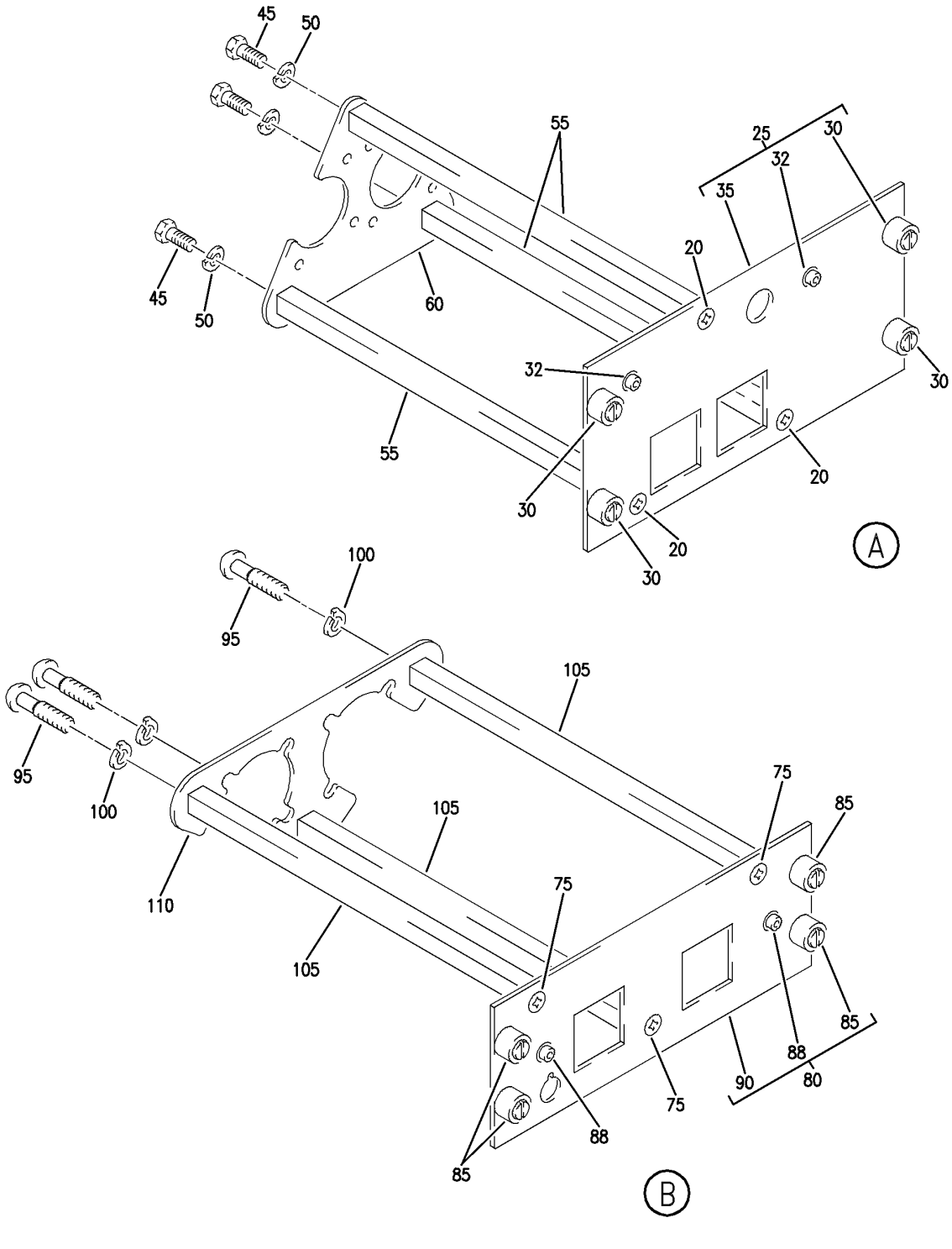

PANEL INSTL-P5 OVHD (INDICATING/RECORDING SYSTEMS ONLY)
FIGURE 1 (SHEET 2)

BOEING PROPRIETARY - Copyright © - Unpublished Work - See title page for details.

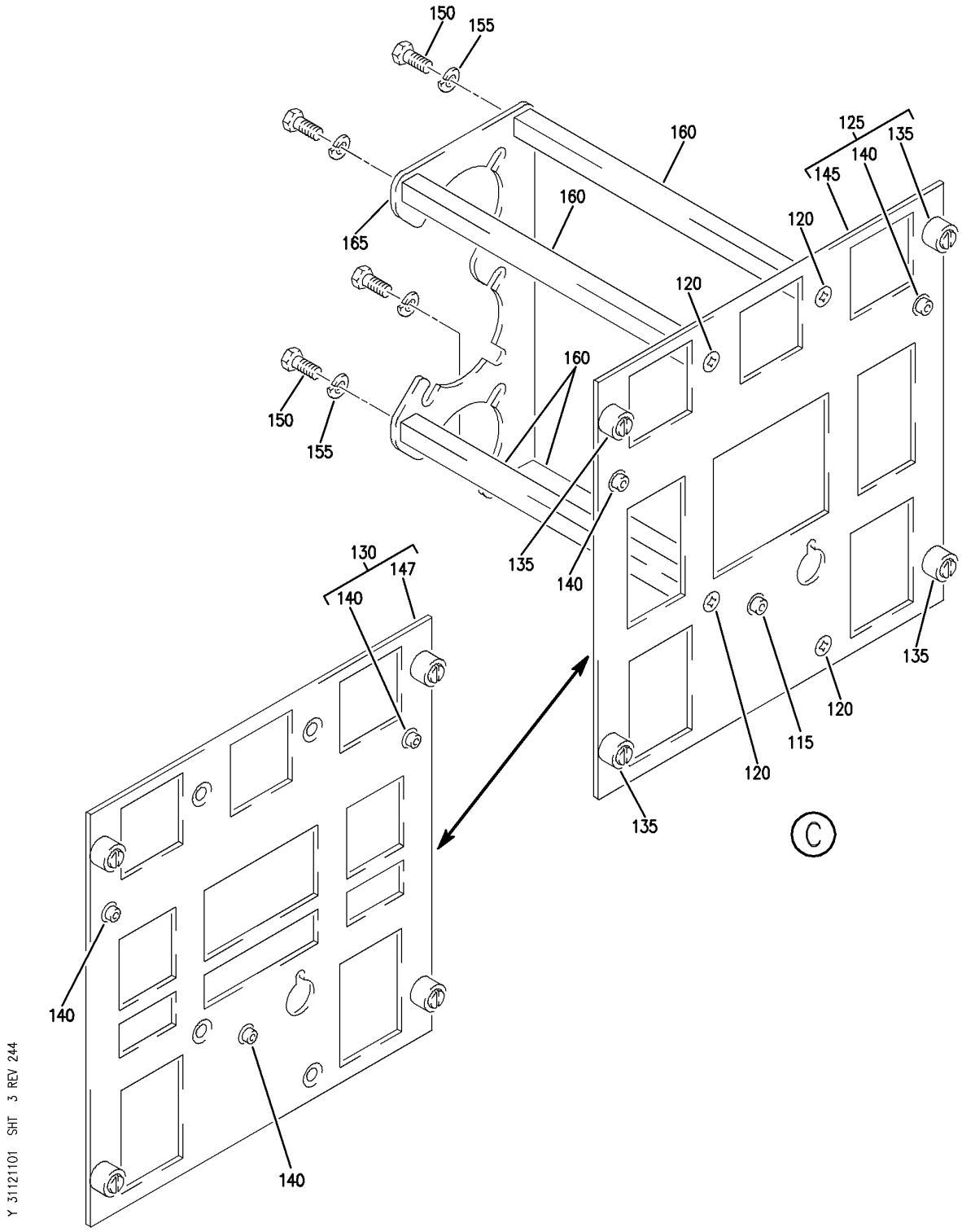

PANEL INSTL-P5 OVHD (INDICATING/RECORDING SYSTEMS ONLY)
FIGURE 1 (SHEET 3)

BOEING PROPRIETARY - Copyright © - Unpublished Work - See title page for details.

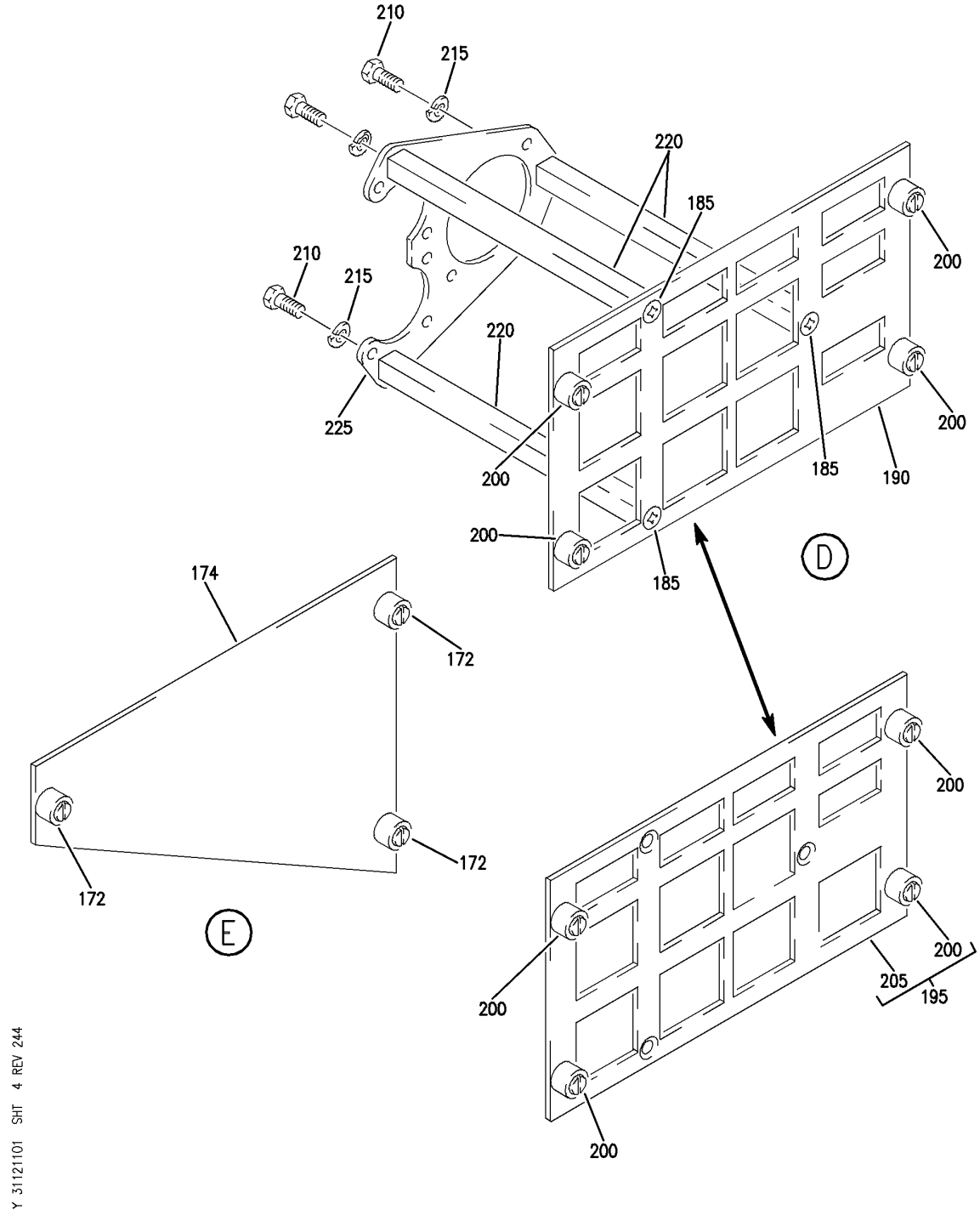

PANEL INSTL-P5 OVHD (INDICATING/RECORDING SYSTEMS ONLY)
FIGURE 1 (SHEET 4)

BOEING PROPRIETARY - Copyright © - Unpublished Work - See title page for details.

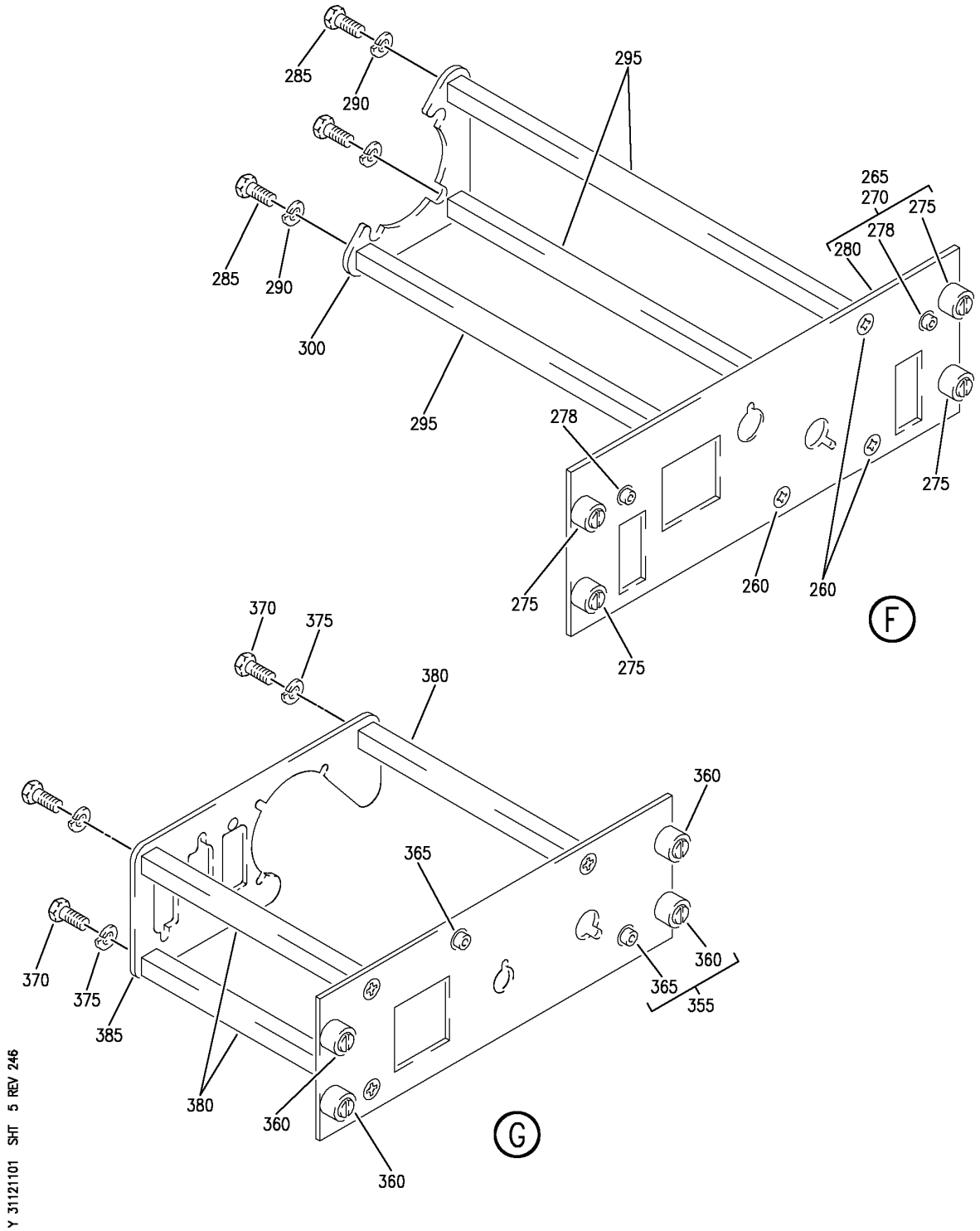

PANEL INSTL-P5 OVHD (INDICATING/RECORDING SYSTEMS ONLY)
FIGURE 1 (SHEET 5)

BOEING PROPRIETARY - Copyright © - Unpublished Work - See title page for details.

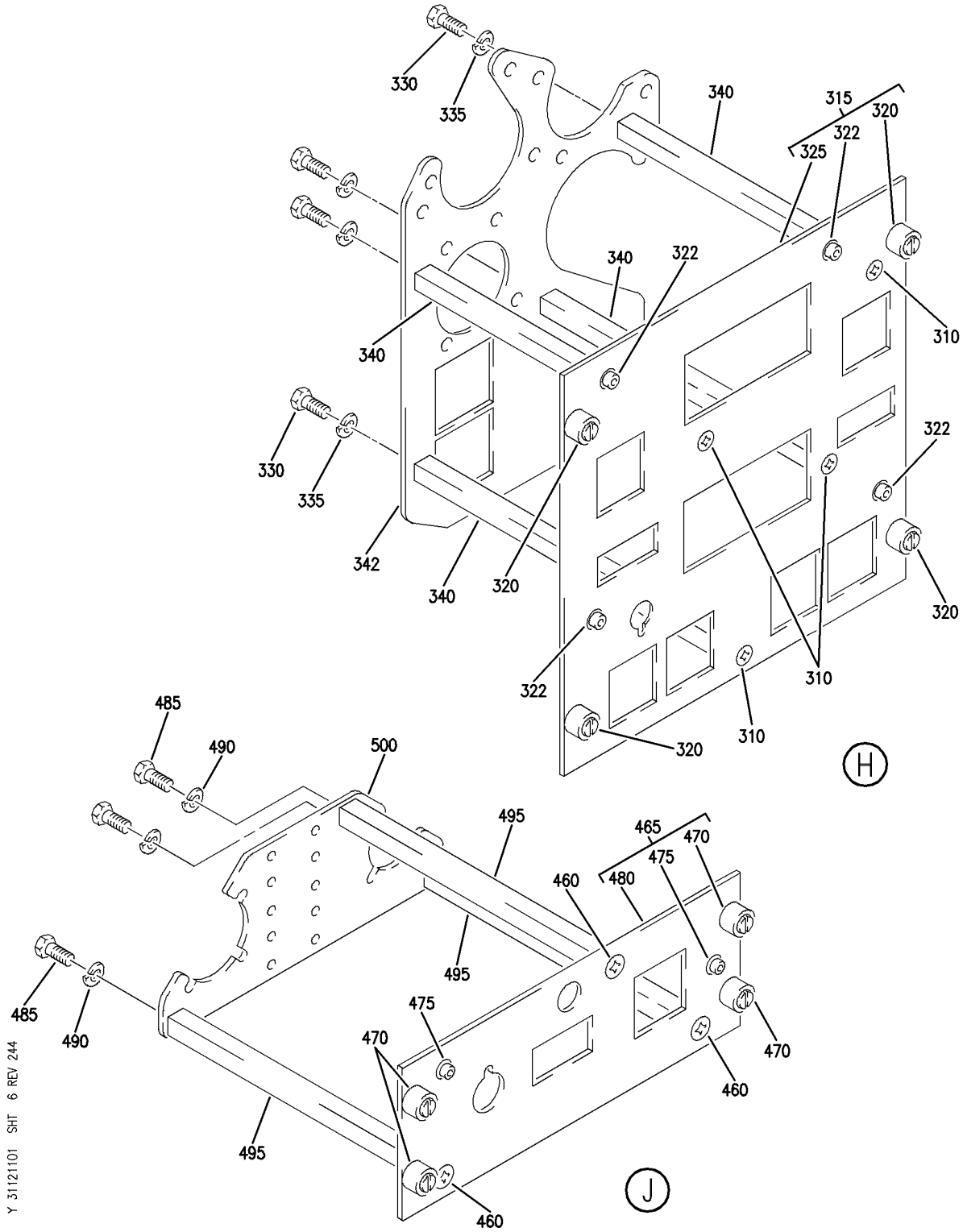

PANEL INSTL-P5 OVHD (INDICATING/RECORDING SYSTEMS ONLY)
FIGURE 1 (SHEET 6)

BOEING PROPRIETARY - Copyright © - Unpublished Work - See title page for details.

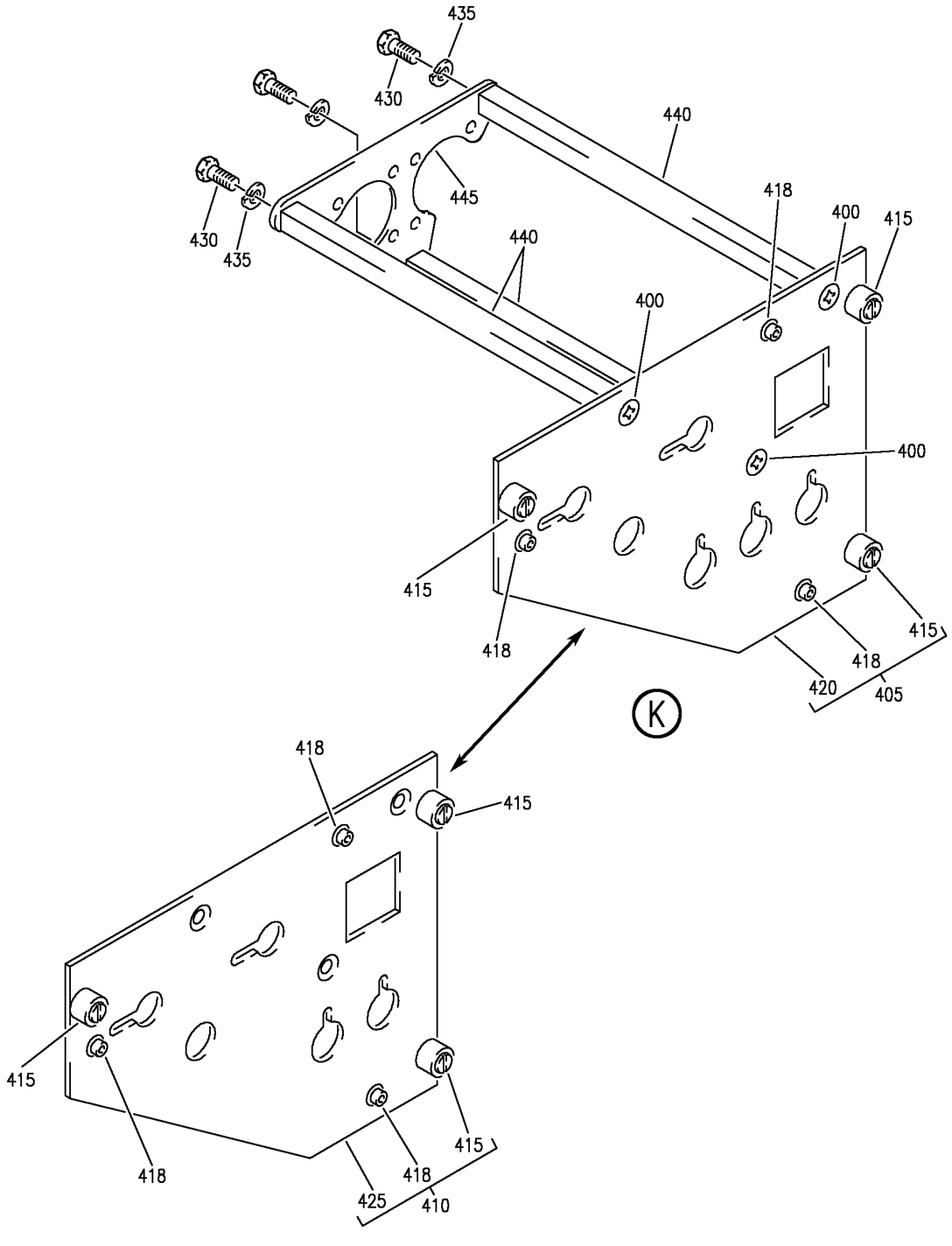

PANEL INSTL-P5 OVHD (INDICATING/RECORDING SYSTEMS ONLY)
FIGURE 1 (SHEET 7)

BOEING PROPRIETARY - Copyright © - Unpublished Work - See title page for details.

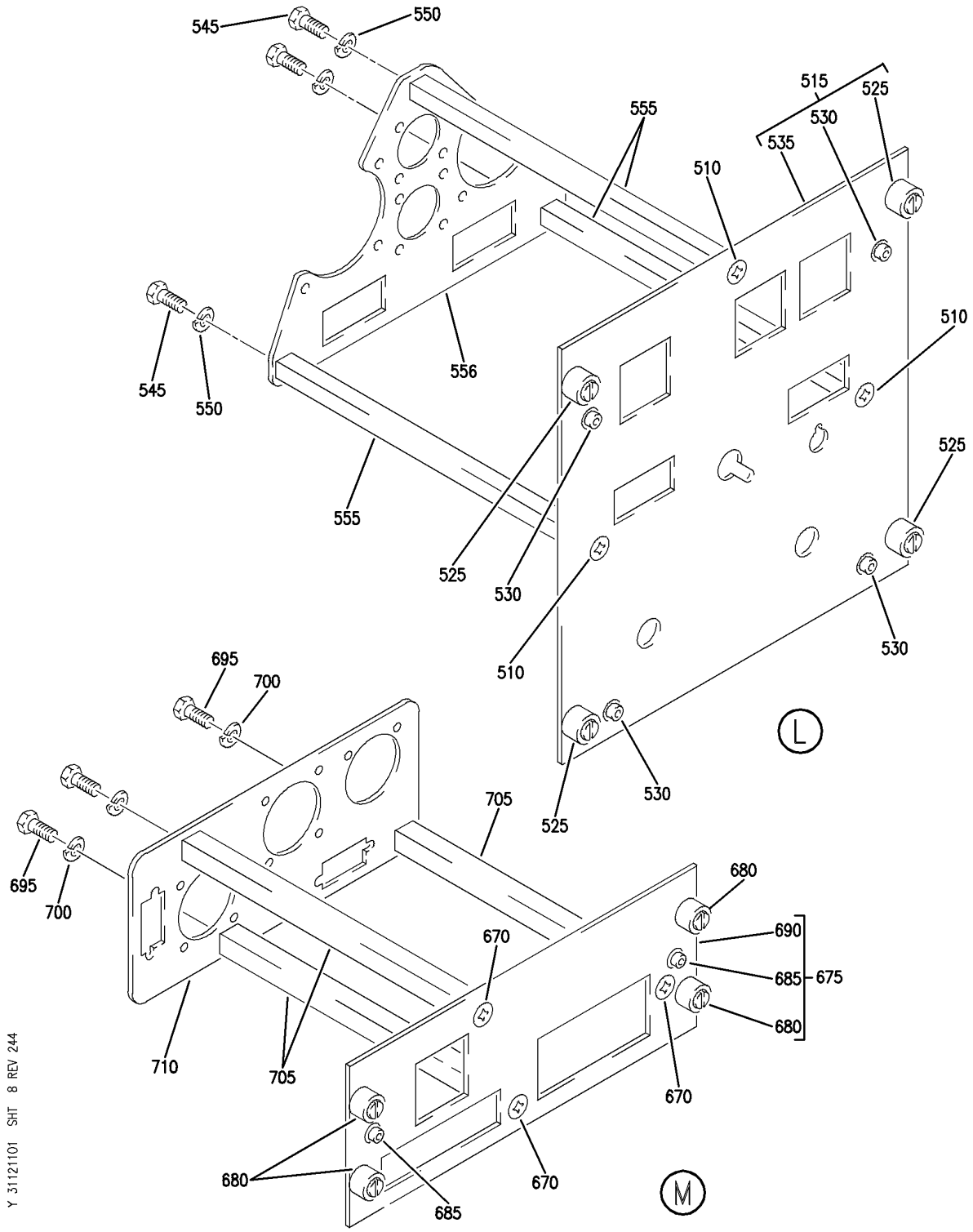

PANEL INSTL-P5 OVHD (INDICATING/RECORDING SYSTEMS ONLY)
FIGURE 1 (SHEET 8)

BOEING PROPRIETARY - Copyright © - Unpublished Work - See title page for details.

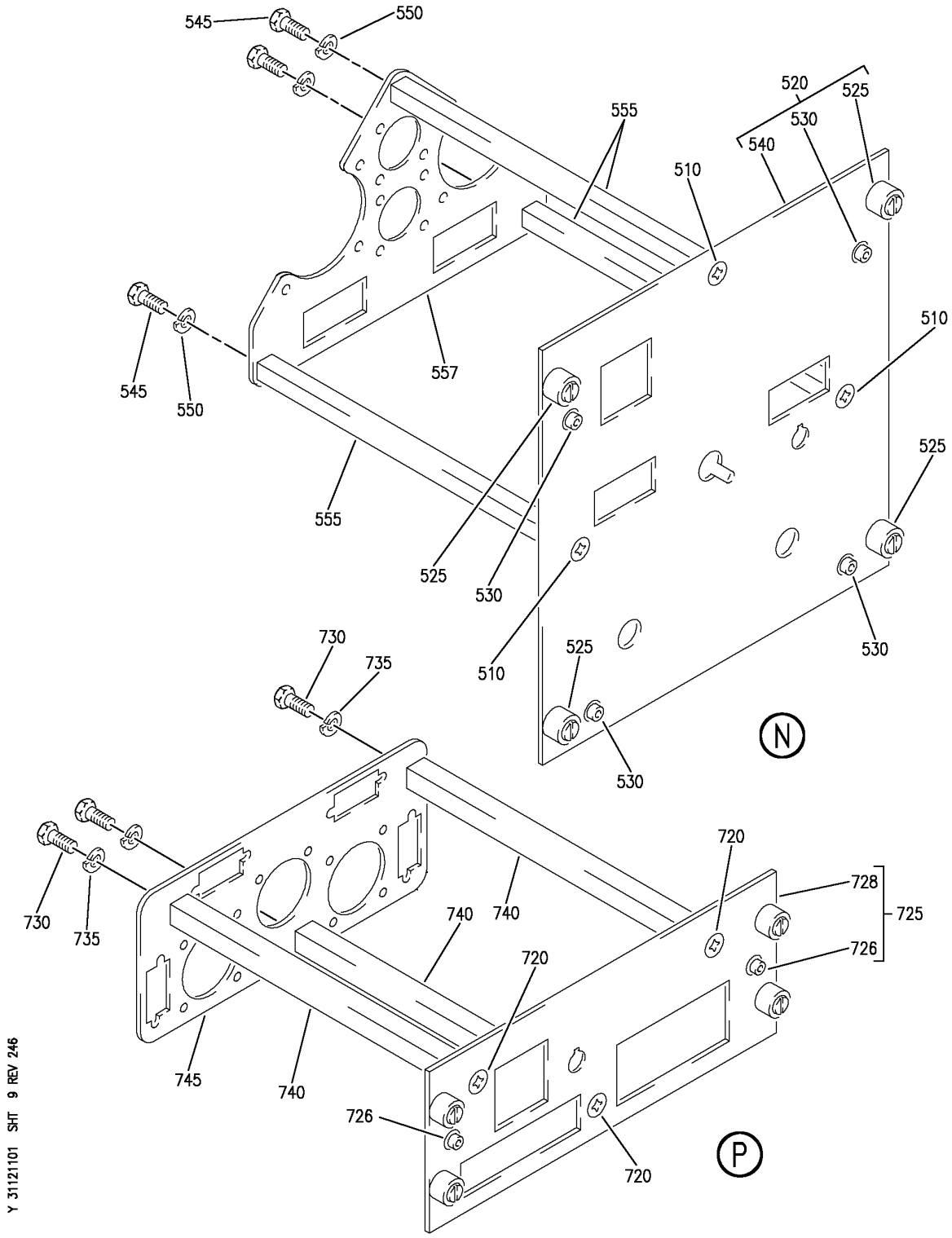

PANEL INSTL-P5 OVHD (INDICATING/RECORDING SYSTEMS ONLY)
FIGURE 1 (SHEET 9)

BOEING PROPRIETARY - Copyright © - Unpublished Work - See title page for details.

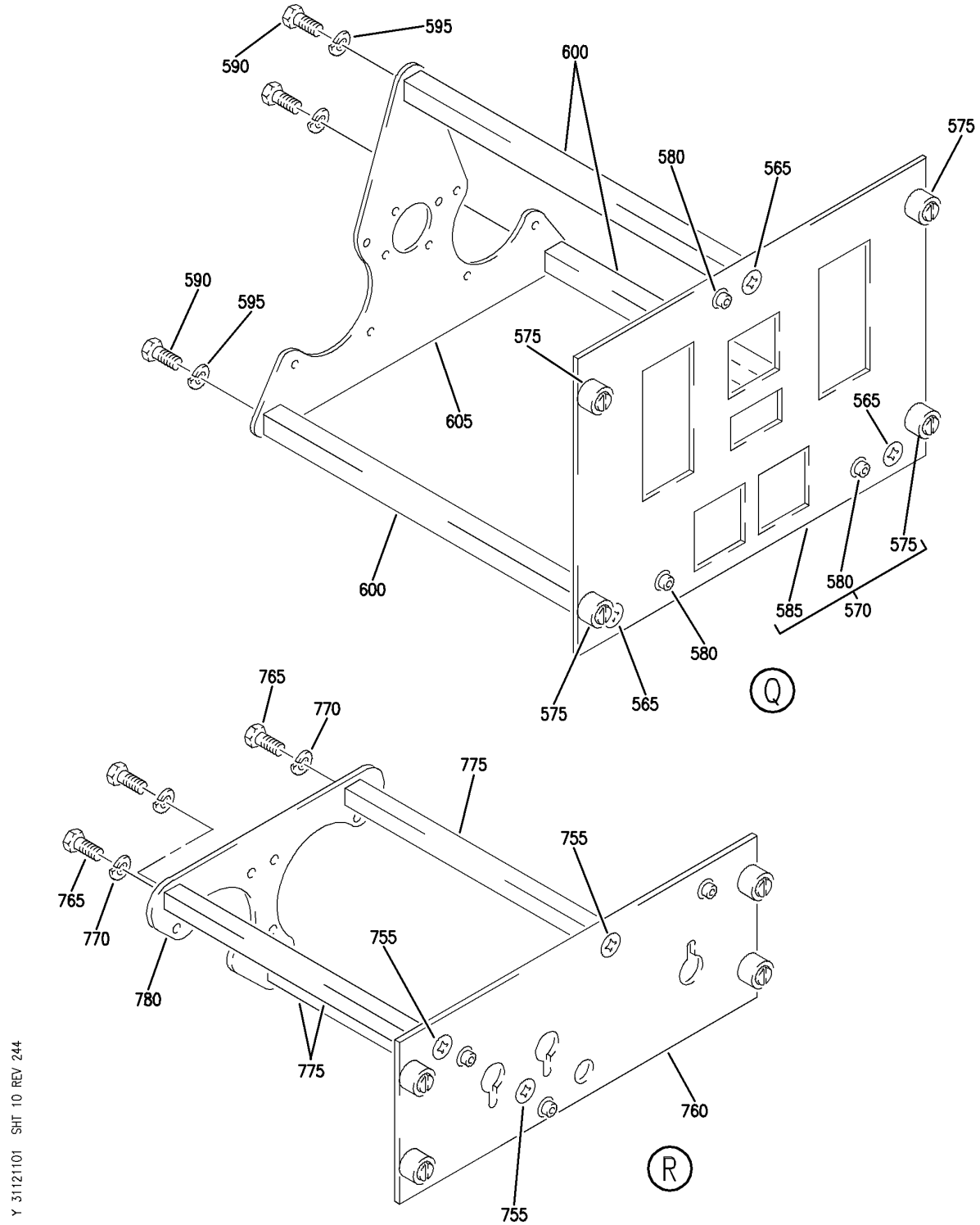

PANEL INSTL-P5 OVHD (INDICATING/RECORDING SYSTEMS ONLY)
FIGURE 1 (SHEET 10)

BOEING PROPRIETARY - Copyright © - Unpublished Work - See title page for details.

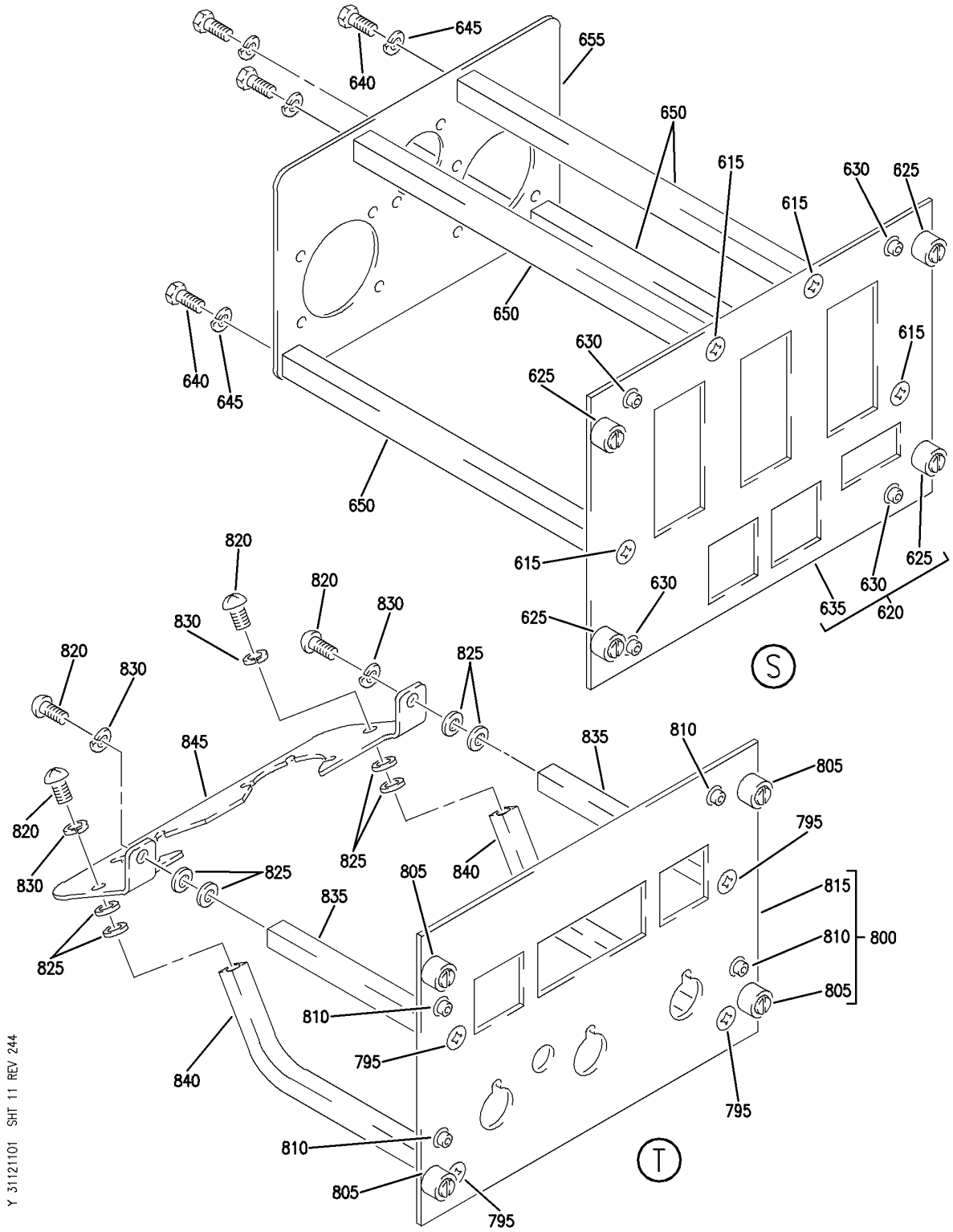

PANEL INSTL-P5 OVHD (INDICATING/RECORDING SYSTEMS ONLY)
FIGURE 1 (SHEET 11)

BOEING PROPRIETARY - Copyright © - Unpublished Work - See title page for details.

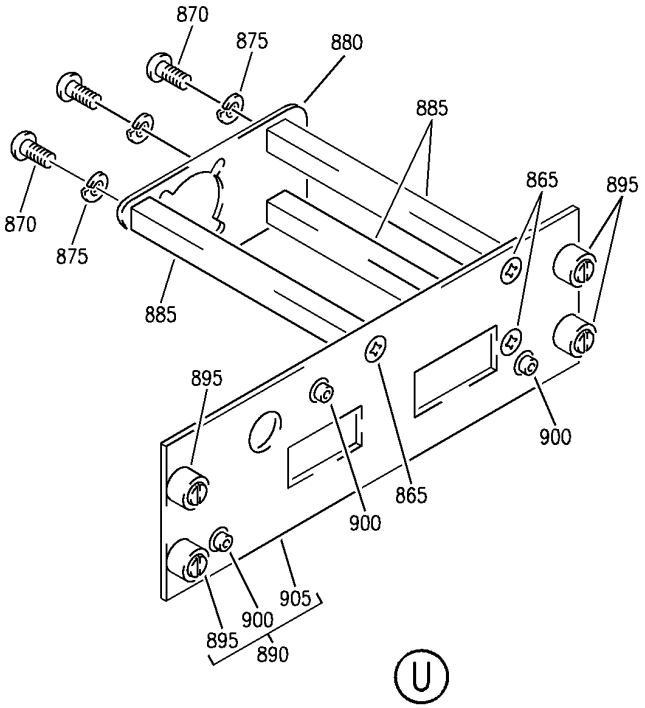

Y 31121101 SHT 12 REV 295

PANEL INSTL-P5 OVHD (INDICATING/RECORDING SYSTEMS ONLY)
FIGURE 1 (SHEET 12)

BOEING PROPRIETARY - Copyright © - Unpublished Work - See title page for details.

FIG ITEM	PART NUMBER	1 2 3 4 5 6 7 NOMENCLATURE	EFFECT FROM TO	UNITS PER ASSY
1				
		PANEL INSTL-P5 OVHD	002004	
		(INDICATING/RECORDING	006010	
		SYSTEMS ONLY)	950999	
- 1	233N3101-1	PANEL INSTL-P5 OVHD	002004	RF
		(INDICATING/RECORDING	006010	
		SYSTEMS ONLY)	950999	
		VARIABLE DRAWING REF:		
		233N3101-5041		
		233N3101-5042		
		233N3101-5045		
		FOR NHA/OTHER SYS DET SEE:		
		25-10-00-05A		
5	BACP10U0262T	.PANEL	002004	1
			006010	
			950999	
10	CG1093AD01	.PANEL ASSY-IRS MODE	002004	RF
		SELECT	006010	
		SUPPLIER CODE:	950999	
		V94580		
		SPECIFICATION NUMBER:		
		S242T101-203		
		ELECTRICAL EQUIP NUMBER:		
		M00059		
		COMPONENT MAINT MANUAL REF:		
		34-21-21		
		QUALIFIED I/W DATA:		
		CG1093AD01 I/W		
		CG1093AC01 EXCEPT		
		CG1093AD01 DISPLAYS IRU		
		MAINTENANCE CODES AND		
		THE TIME REMAINING IN		
		ALIGNMENT		
		CG1093AD01 I/W		
		CG1093AD02 EXCEPT		
		CG1093AD01 DISPLAYS IRU		
		MAINTENANCE CODES AND		
		THE TIME REMAINING IN		
		ALIGNMENT		
		FOR BREAKDOWN SEE:		
		34-21-02-01		

MISSING ITEM NUMBERS NOT APPLICABLE

- ITEM NOT ILLUSTRATED

BOEING PROPRIETARY - Copyright © - Unpublished Work - See title page for details.

FIG ITEM	PART NUMBER	1 2 3 4 5 6 7 NOMENCLATURE	EFFECT FROM TO	UNITS PER ASSY
1				
15	233N3216-20	.PANEL ASSY- SUPPLIER CODE: V89954 MISCELLANEOUS DATA: FOR SPARES PROCURE NEXT HIGHER ASSY ELECTRICAL EQUIP NUMBER: M10250 COMPONENT MAINT MANUAL REF: 22-21-71 QUALIFIED I/W DATA: 233N3216-14 -18 -20 -21 -22 ARE ALL INTERCHANGEABLE EXCEPT SUBJECT TO CUSTOMER PREFERENCE THE 233N3216-300 PANEL ASSY IS I/W THE 233N3216-20 PANEL ASSY T/W THE S233T100-1075 LIGHTPLATE PRE ALERT SB: 33A0044 FOR OTHER SYS DETAILS SEE: 22-21-01-01 33-13-01-71	002004 006010 950999	1
15	233N3216-1020	.PANEL ASSY- SUPPLIER CODE: V89954 ELECTRICAL EQUIP NUMBER: M10250 COMPONENT MAINT MANUAL REF: 22-21-71 POST ALERT SB: 33A0044 FOR OTHER SYS DETAILS SEE: 22-21-01-01 33-13-01-71	002004 006010 950999	1
20	NAS514P632-5	..SCREW	002004 006010 950999	3
25	233N3216-2	..BASEPLATE ASSY- SUPPLIER CODE: V89954	002004 006010 950999	1
30	PFSC35-38ASEMB	...STUD ASSY- SUPPLIER CODE: V72794 SPECIFICATION NUMBER: BACS21DX1B	002004 006010 950999	4

MISSING ITEM NUMBERS NOT APPLICABLE

– ITEM NOT ILLUSTRATED

BOEING PROPRIETARY - Copyright © - Unpublished Work - See title page for details.

FIG ITEM	PART NUMBER	1 2 3 4 5 6 7 NOMENCLATURE	EFFECT FROM TO	UNITS PER ASSY
1				
32	SF6G6CBB5D	...NUT SUPPLIER CODE: V12324 SPECIFICATION NUMBER: BACN10PA06-6	002004 006010 950999	2
35	233N3216-3	...BASEPLATE- SUPPLIER CODE: V89954	002004 006010 950999	1
45	NAS1801-06-5	..SCREW	002004 006010 950999	3
50	MS35338-41	..WASHER	002004 006010 950999	3
55	69B46200-12	..STANDOFF	002004 006010 950999	3
60	233N3250-15	..BRACKET-CONN.	002004 006010 950999	1
70	233T3242-6	.PANEL ASSY-EEC CONT SUPPLIER CODE: V89954 ELECTRICAL EQUIP NUMBER: M10761 COMPONENT MAINT MANUAL REF: 73-21-86 QUALIFIED I/W DATA: 233T3242-301 PANEL ASSY IS I/W 233T3242-6 PANEL ASSY T/W S233T100-1092 LIGHTPLATE PRE ALERT SB: 33A0044 FOR OTHER SYS DETAILS SEE: 33-13-01-71 73-21-52-01	002004 006010 950999	1
70	233T3242-1006	.PANEL ASSY-EEC CONT SUPPLIER CODE: V89954 ELECTRICAL EQUIP NUMBER: M10761 COMPONENT MAINT MANUAL REF: 73-21-86 POST ALERT SB: 33A0044 FOR OTHER SYS DETAILS SEE: 33-13-01-71 73-21-52-01	002004 006010 950999	1

MISSING ITEM NUMBERS NOT APPLICABLE

– ITEM NOT ILLUSTRATED

BOEING PROPRIETARY - Copyright © - Unpublished Work - See title page for details.

FIG ITEM	PART NUMBER	1 2 3 4 5 6 7 NOMENCLATURE	EFFECT FROM TO	UNITS PER ASSY
1				
75	NAS514P632-5P	..SCREW	002004 006010 950999	3
80	233T3242-2	..BASEPLATE ASSY- SUPPLIER CODE: V89954	002004 006010 950999	1
85	PFSC35-38ASEMB	...STUD ASSY- SUPPLIER CODE: V72794 SPECIFICATION NUMBER: BACS21DX1B	002004 006010 950999	4
88	SF6G6CBB5D	...NUT- SUPPLIER CODE: V12324	002004 006010 950999	2
90	BACP10U0187N	...BASEPLATE	002004 006010 950999	1
95	BACS12CK06U5	..SCREW-	002004 006010 950999	3
100	BACW10EC06C	..WASHER-	002004 006010 950999	3
105	69B46200-12	..STANDOFF	002004 006010 950999	3
110	233T6200-142	..BRACKET-SPRT	002004 006010 950999	1
115	233N3205-24	.PANEL ASSY-HYDR SUPPLIER CODE: V89954 ELECTRICAL EQUIP NUMBER: M10050 COMPONENT MAINT MANUAL REF: 29-00-71 QUALIFIED I/W DATA: 233N3205-300 PANEL ASSY IS I/W 233N3205-24 PANEL ASSY T/W S233T100-6044 LIGHTPLATE FOR OTHER SYS DETAILS SEE: 29-11-52-01 29-11-02-07 29-11-05-06 29-31-00-03 29-32-51-01 29-33-52-01 33-13-01-71	002004 006010 950999	1

MISSING ITEM NUMBERS NOT APPLICABLE

– ITEM NOT ILLUSTRATED

BOEING PROPRIETARY - Copyright © - Unpublished Work - See title page for details.

FIG ITEM	PART NUMBER	1 2 3 4 5 6 7 NOMENCLATURE	EFFECT FROM TO	UNITS PER ASSY
1				
115	233N3205-21	.PANEL ASSY-HYDR SUPPLIER CODE: V89954 ELECTRICAL EQUIP NUMBER: M10050 COMPONENT MAINT MANUAL REF: 29-00-71 FOR OTHER SYS DETAILS SEE: 29-11-02-07 29-11-05-06 29-11-52-01 29-31-00-03 29-32-51-01 29-33-52-01 33-13-01-71	002004 006010 950999	1
115	233N3205-19	.PANEL ASSY-HYDR SUPPLIER CODE: V89954 ELECTRICAL EQUIP NUMBER: M10050 COMPONENT MAINT MANUAL REF: 29-00-71 FOR OTHER SYS DETAILS SEE: 29-11-52-01 29-11-02-07 29-11-05-06 29-31-00-03 29-32-51-01 29-33-52-01 33-13-01-71	002004 006010 950999	1

MISSING ITEM NUMBERS NOT APPLICABLE

– ITEM NOT ILLUSTRATED

BOEING PROPRIETARY - Copyright © - Unpublished Work - See title page for details.

FIG ITEM	PART NUMBER	1 2 3 4 5 6 7 NOMENCLATURE	EFFECT FROM TO	UNITS PER ASSY
1				
115	233N3205-25	.PANEL ASSY-HYDR SUPPLIER CODE: V89954 ELECTRICAL EQUIP NUMBER: M10050 COMPONENT MAINT MANUAL REF: 29-00-71 QUALIFIED I/W DATA: 233N3205-301 PANEL ASSY IS I/W 233N3205-25 PANEL ASSY T/W S233T100-6044 LIGHTPLATE FOR OTHER SYS DETAILS SEE: 29-11-02-07 29-11-05-06 29-11-52-01 29-31-00-03 29-32-51-01 29-33-52-01 33-13-01-71	002004 006010 950999	1
115	233N3205-26	.PANEL ASSY-HYDR SUPPLIER CODE: V89954 ELECTRICAL EQUIP NUMBER: M10050 COMPONENT MAINT MANUAL REF: 29-00-71 FOR OTHER SYS DETAILS SEE: 29-11-02-07 29-11-05-06 29-11-52-01 29-31-00-03 29-32-51-01 29-33-52-01 33-13-01-71	002004 006010 950999	1

MISSING ITEM NUMBERS NOT APPLICABLE

– ITEM NOT ILLUSTRATED

BOEING PROPRIETARY - Copyright © - Unpublished Work - See title page for details.

FIG ITEM	PART NUMBER	1 2 3 4 5 6 7 NOMENCLATURE	EFFECT FROM TO	UNITS PER ASSY
1				
117	233N3205-27	.PANEL ASSY-HYDR SUPPLIER CODE: V89954 ELECTRICAL EQUIP NUMBER: M10050 COMPONENT MAINT MANUAL REF: 29-00-71 QUALIFIED I/W DATA: 233N3205-302 PANEL ASSY IS I/W 233N3205-27 PANEL ASSY T/W S233T100-6060 LIGHTPLATE FOR OTHER SYS DETAILS SEE: 29-11-02-07 29-11-05-06 29-11-52-01 29-31-00-03 29-32-51-01 29-33-52-01 33-13-01-71	002004 006010 950999	1
120	NAS514P632-5	..SCREW	002004 006010 950999	4
125	233N3205-2	..BASEPLATE ASSY- SUPPLIER CODE: V89954 USED ON: 233N3205-19 233N3205-24 233N3205-21 233N3205-25 233N3205-26	002004 006010 950999	1
130	233N3205-30	..BASEPLATE ASSY- SUPPLIER CODE: V89954 USED ON: 233N3205-27	002004 006010 950999	1
135	PFSC35-38ASEMB	...STUD ASSY- SUPPLIER CODE: V72794 SPECIFICATION NUMBER: BACS21DX1B USED ON: 233N3205-2	002004 006010 950999	4
140	SF6G6CBB5D	...NUT SUPPLIER CODE: V12324 SPECIFICATION NUMBER: BACN10PA06-6	002004 006010 950999	3

MISSING ITEM NUMBERS NOT APPLICABLE

— ITEM NOT ILLUSTRATED

BOEING PROPRIETARY - Copyright © - Unpublished Work - See title page for details.

FIG ITEM	PART NUMBER	1 2 3 4 5 6 7 NOMENCLATURE	EFFECT FROM TO	UNITS PER ASSY
1				
145	233N3205-3	...BASEPLATE-	002004	1
		SUPPLIER CODE:	006010	
		V89954	950999	
		USED ON:		
		233N3205-2		
147	BACP10U0600T	...PANEL ASSY-	002004	1
		USED ON:	006010	
		233N3205-30	950999	
150	NAS1801-06-5	..SCREW-	002004	4
		OPTIONAL PART:	006010	
		BACS12HN06-5	950999	
		USED ON:		
		233N3205-24		
		233N3205-27		
		233N3205-25		
150	BACS12CB06-5	..SCREW-	002004	4
		USED ON:	006010	
		233N3205-19	950999	
		233N3205-21		
150	BACS12HN06-5	..SCREW-	002004	4
		OPTIONAL PART:	006010	
		NAS1801-06-5	950999	
		USED ON:		
		233N3205-27		
		233N3205-24		
		233N3205-25		
150	BACS12HN06-5	..SCREW-	002004	4
		USED ON:	006010	
		233N3205-26	950999	
155	MS35338-41	..WASHER-	002004	4
		USED ON:	006010	
		233N3205-19	950999	
		233N3205-21		
155	BACW10EC06S	..WASHER-	002004	4
		USED ON:	006010	
		233N3205-26	950999	
		233N3205-25		
		233N3205-24		
155	MS35338-41	..WASHER-	002004	4
		OPTIONAL PART:	006010	
		BACW10EC06S	950999	
		USED ON:		
		233N3205-27		
155	BACW10EC06S	..WASHER-	002004	4
		OPTIONAL PART:	006010	
		MS35338-41	950999	
		USED ON:		
		233N3205-27		

MISSING ITEM NUMBERS NOT APPLICABLE

— ITEM NOT ILLUSTRATED

BOEING PROPRIETARY - Copyright © - Unpublished Work - See title page for details.

FIG ITEM	PART NUMBER	1 2 3 4 5 6 7 NOMENCLATURE	EFFECT FROM TO	UNITS PER ASSY
1				
160	69B46200-11	..STANDOFF	002004 006010 950999	4
165	233N3250-8	..BRACKET-CONN.	002004 006010 950999	1
170	233T3200-2	.PANEL ASSY	002004 006010 950999	1
172	BACS21DD1B	..STUD ASSY SUPPLIER CODE: V08524 SPECIFICATION NUMBER: BACS21DD1B	002004 006010 950999	3
174	233T3200-4	..BASEPLATE	002004 006010 950999	1
175	233N3202-17	.PANEL ASSY-ANN. SUPPLIER CODE: V89954 ELECTRICAL EQUIP NUMBER: M10394 COMPONENT MAINT MANUAL REF: 33-16-71 FOR OTHER SYS DETAILS SEE: 22-24-51-01 27-21-53-01 27-41-55-01 27-61-51-01 27-62-52-01 30-31-51-01 30-32-51-01 30-33-51-01 32-42-52-01 52-71-51-01	952999	1

MISSING ITEM NUMBERS NOT APPLICABLE

– ITEM NOT ILLUSTRATED

BOEING PROPRIETARY - Copyright © - Unpublished Work - See title page for details.

FIG ITEM	PART NUMBER	1 2 3 4 5 6 7 NOMENCLATURE	EFFECT FROM TO	UNITS PER ASSY
1				
175	233N3202-15	.PANEL ASSY-ANN. SUPPLIER CODE: V89954 NOT APPROVED FOR ETOPS. ELECTRICAL EQUIP NUMBER: M10394 COMPONENT MAINT MANUAL REF: 33-16-71 FOR OTHER SYS DETAILS SEE: 22-24-51-01 27-21-53-01 27-41-55-01 27-61-51-01 27-62-52-01 30-31-51-01 30-32-51-01 30-33-51-01 32-42-52-01 52-71-51-01	950951	1
175	233N3202-10	.PANEL ASSY-ANN. SUPPLIER CODE: V89954 NOT APPROVED FOR ETOPS. ELECTRICAL EQUIP NUMBER: M10394 COMPONENT MAINT MANUAL REF: 33-16-71 FOR OTHER SYS DETAILS SEE: 22-24-51-01 27-21-53-01 27-41-55-01 27-61-51-01 27-62-52-01 30-31-51-01 30-32-51-01 30-33-51-01 32-42-52-01 52-71-51-01	950951	1

MISSING ITEM NUMBERS NOT APPLICABLE

– ITEM NOT ILLUSTRATED

BOEING PROPRIETARY - Copyright © - Unpublished Work - See title page for details.

FIG ITEM	PART NUMBER	1 2 3 4 5 6 7 NOMENCLATURE	EFFECT FROM TO	UNITS PER ASSY
1				
180	233N3202-21	.PANEL ASSY-ANN. SUPPLIER CODE: V89954 ELECTRICAL EQUIP NUMBER: M10394 COMPONENT MAINT MANUAL REF: 33-16-71 FOR OTHER SYS DETAILS SEE: 22-24-51-01 26-14-51-01 27-21-53-01 27-41-55-01 27-61-51-01 27-62-52-01 30-31-51-01 30-32-51-01 30-33-51-01 32-42-52-01 52-71-51-01	950951	1
185	NAS514P632-5	..SCREW	002004 006010 950999	3
190	233N3202-2	..BASEPLATE ASSY- SUPPLIER CODE: V89954	950999	1
195	233N3202-22	..BASEPLATE ASSY- SUPPLIER CODE: V89954	950951	1
200	BACS21DD1B	...STUD ASSY SUPPLIER CODE: V08524 SPECIFICATION NUMBER: BACS21DD1B	002004 006010 950999	4
205	233N3202-23	...BASEPLATE- SUPPLIER CODE: V89954	950951	1
210	NAS1801-6-5	..SCREW-	002004 006010 950999	3
215	MS35338-41	..WASHER	002004 006010 950999	3
220	69B46200-10	..STANDOFF	002004 006010 950999	3
225	233N3250-7	..BRACKET-CONN.	002004 006010 950999	1

MISSING ITEM NUMBERS NOT APPLICABLE

– ITEM NOT ILLUSTRATED

BOEING PROPRIETARY - Copyright © - Unpublished Work - See title page for details.

FIG ITEM	PART NUMBER	1 2 3 4 5 6 7 NOMENCLATURE	EFFECT FROM TO	UNITS PER ASSY
1				
235	BACP10U0225T	.PANEL	002004 006010 950999	1
245	622-6827-002	.PANEL ASSY-HF CONT (CUSTOMER FURNISHED) SUPPLIER CODE: V4V792 ELECTRICAL EQUIP NUMBER: M00082 COMPONENT MAINT MANUAL REF: 23-10-73 FOR BREAKDOWN SEE: 23-11-02-01	002004 006010 950999	RF
245	622-5432-002	.PANEL ASSY-HF CONT (CUSTOMER FURNISHED) SUPPLIER CODE: V4V792 ELECTRICAL EQUIP NUMBER: M00082 COMPONENT MAINT MANUAL REF: 23-10-71 FOR BREAKDOWN SEE: 23-11-02-01	002004 006010 950999	RF
250	BACP10U0225T	.PANEL-	002004 006010 950999	1

MISSING ITEM NUMBERS NOT APPLICABLE

– ITEM NOT ILLUSTRATED

BOEING PROPRIETARY - Copyright © - Unpublished Work - See title page for details.

FIG ITEM	PART NUMBER	1 2 3 4 5 6 7 NOMENCLATURE	EFFECT FROM TO	UNITS PER ASSY
1				
255	233N3211-36	.PANEL ASSY-BATTERY/STBY PWR SUPPLIER CODE: V89954 ELECTRICAL EQUIP NUMBER: M10062 COMPONENT MAINT MANUAL REF: 24-33-72 QUALIFIED I/W DATA: 233N3211-25 -32 -36 -37 -38 ARE ALL INTERCHANGEABLE EXCEPT SUBJECT TO CUSTOMER PREFERENCE THE 233N3211-300 PANEL ASSY IS I/W THE 233N3211-36 PANEL ASSY T/W THE S233T100-1080 LIGHTPLATE AND BP248-127 KNOB PRE ALERT SB: 33A0044 FOR OTHER SYS DETAILS SEE: 24-31-01-11 24-33-04-02 33-13-01-71	950951	1
255	233N3211-1036	.PANEL ASSY-BATTERY/STBY PWR SUPPLIER CODE: V89954 ELECTRICAL EQUIP NUMBER: M10062 COMPONENT MAINT MANUAL REF: 24-33-72 POST SERVICE BULLETIN: 24-0125R2 POST ALERT SB: 33A0044 FOR OTHER SYS DETAILS SEE: 24-31-01-11 24-33-04-02 33-13-01-71	009009 950951	1

MISSING ITEM NUMBERS NOT APPLICABLE

— ITEM NOT ILLUSTRATED

BOEING PROPRIETARY - Copyright © - Unpublished Work - See title page for details.

FIG ITEM	PART NUMBER	1 2 3 4 5 6 7 NOMENCLATURE	EFFECT FROM TO	UNITS PER ASSY
1				
255	233N3211-32	.PANEL ASSY-BATTERY/STBY PWR SUPPLIER CODE: V89954 ELECTRICAL EQUIP NUMBER: M10062 COMPONENT MAINT MANUAL REF: 24-33-71 PRE ALERT SB: 33A0044 POST AIRLINE MOD: 757-38-00 VALP FOR OTHER SYS DETAILS SEE: 24-31-01-11 24-33-04-02 33-13-01-71	950951	1
255	233N3211-27	.PANEL ASSY-BATTERY/STBY PWR SUPPLIER CODE: V89954 ELECTRICAL EQUIP NUMBER: M10062 COMPONENT MAINT MANUAL REF: 24-33-71 PRE ALERT SB: 33A0044 POST AIRLINE MOD: 757-38-00 VALP FOR OTHER SYS DETAILS SEE: 24-31-01-11 24-33-04-02 33-13-01-71	950951	1

MISSING ITEM NUMBERS NOT APPLICABLE

– ITEM NOT ILLUSTRATED

BOEING PROPRIETARY - Copyright © - Unpublished Work - See title page for details.

FIG ITEM	PART NUMBER	1 2 3 4 5 6 7 NOMENCLATURE	EFFECT FROM TO	UNITS PER ASSY
1				
255	233N3211-25	.PANEL ASSY-BATTERY/STBY PWR SUPPLIER CODE: V89954 ELECTRICAL EQUIP NUMBER: M10062 COMPONENT MAINT MANUAL REF: 24-33-71 PRE ALERT SB: 33A0044 POST AIRLINE MOD: 757-38-00 VALP FOR OTHER SYS DETAILS SEE: 24-31-01-11 24-33-04-02 33-13-01-71	950951	1
255	233N3211-15	.PANEL ASSY-BATTERY/STBY PWR SUPPLIER CODE: V89954 ELECTRICAL EQUIP NUMBER: M10062 COMPONENT MAINT MANUAL REF: 24-33-71 PRE ALERT SB: 33A0044 POST AIRLINE MOD: 757-38-00 VALP FOR OTHER SYS DETAILS SEE: 24-31-01-11 24-33-04-02 33-13-01-71	950951	1
255	233N3211-1032	.PANEL ASSY-BATTERY/STBY PWR SUPPLIER CODE: V89954 ELECTRICAL EQUIP NUMBER: M10062 COMPONENT MAINT MANUAL REF: 24-33-71 POST ALERT SB: 33A0044 FOR OTHER SYS DETAILS SEE: 24-31-01-11 24-33-04-02 33-13-01-71	950951	1

MISSING ITEM NUMBERS NOT APPLICABLE

– ITEM NOT ILLUSTRATED

BOEING PROPRIETARY - Copyright © - Unpublished Work - See title page for details.

FIG ITEM	PART NUMBER	1 2 3 4 5 6 7 NOMENCLATURE	EFFECT FROM TO	UNITS PER ASSY
1				
255	233N3211-1027	.PANEL ASSY-BATTERY/STBY PWR SUPPLIER CODE: V89954 ELECTRICAL EQUIP NUMBER: M10062 COMPONENT MAINT MANUAL REF: 24-33-71 POST ALERT SB: 33A0044 FOR OTHER SYS DETAILS SEE: 24-31-01-11 24-33-04-02 33-13-01-71	950951	1
255	233N3211-1025	.PANEL ASSY-BATTERY/STBY PWR SUPPLIER CODE: V89954 ELECTRICAL EQUIP NUMBER: M10062 COMPONENT MAINT MANUAL REF: 24-33-71 POST ALERT SB: 33A0044 FOR OTHER SYS DETAILS SEE: 24-31-01-11 24-33-04-02 33-13-01-71	950951	1
255	233N3211-1015	.PANEL ASSY-BATTERY/STBY PWR SUPPLIER CODE: V89954 ELECTRICAL EQUIP NUMBER: M10062 COMPONENT MAINT MANUAL REF: 24-33-71 POST ALERT SB: 33A0044 FOR OTHER SYS DETAILS SEE: 24-31-01-11 24-33-04-02 33-13-01-71	950951	1

MISSING ITEM NUMBERS NOT APPLICABLE

– ITEM NOT ILLUSTRATED

BOEING PROPRIETARY - Copyright © - Unpublished Work - See title page for details.

FIG ITEM	PART NUMBER	1 2 3 4 5 6 7 NOMENCLATURE	EFFECT FROM TO	UNITS PER ASSY
1				
257	233N3211-40	.PANEL ASSY-BATTERY/STBY PWR SUPPLIER CODE: V89954 ELECTRICAL EQUIP NUMBER: M10062 COMPONENT MAINT MANUAL REF: 24-33-72 QUALIFIED I/W DATA: 233N3211-24 -26 -31 -39 -40 ARE ALL INTERCHANGEABLE SUBJECT TO CUSTOMER PREFERENCE THE 233N3211-303 PANEL ASSY IS I/W THE 233N3211-40 PANEL ASSY T/W THE S233T100-1081 LIGHTPLATE AND BP248-127 KNOB PRE SERVICE BULLETIN: 24-0125R2 PRE ALERT SB: 33A0044 FOR OTHER SYS DETAILS SEE: 24-31-01-11 24-31-03-10 24-33-04-02 33-13-01-71	002004 006010 952999	1
257	233N3211-1040	.PANEL ASSY-BATTERY/STBY PWR SUPPLIER CODE: V89954 ELECTRICAL EQUIP NUMBER: M10062 COMPONENT MAINT MANUAL REF: 24-33-72 PRE SERVICE BULLETIN: 24-0125R2 POST ALERT SB: 33A0044 FOR OTHER SYS DETAILS SEE: 24-31-01-11 24-31-03-10 24-33-04-02 33-13-01-71	002004 006010 952999	1
260	NAS514P632-5	..SCREW	002004 006010 950999	3

MISSING ITEM NUMBERS NOT APPLICABLE

– ITEM NOT ILLUSTRATED

BOEING PROPRIETARY - Copyright © - Unpublished Work - See title page for details.

FIG ITEM	PART NUMBER	1 2 3 4 5 6 7 NOMENCLATURE	EFFECT FROM TO	UNITS PER ASSY
1				
265	233N3211-48	..BASEPLATE ASSY- SUPPLIER CODE: V89954	950951	1
270	233N3211-49	..BASEPLATE ASSY- SUPPLIER CODE: V89954	002004 006010 952999	1
275	PFSC35-38ASEMB	...STUD ASSY- SUPPLIER CODE: V72794 SPECIFICATION NUMBER: BACS21DX1B	002004 006010 950999	4
278	SF6G6CBB5D	...NUT- SUPPLIER CODE: V12324	002004 006010 950999	2
280	BACP10U0225NC	...PANEL ASSY-	002004 006010 950999	1
285	NAS1801-06-5	..SCREW	002004 006010 950999	3
290	MS35338-41	..WASHER	002004 006010 950999	3
295	69B46200-17	..STANDOFF	002004 006010 950999	3
300	233N3250-5	..BRACKET	002004 006010 950999	1

MISSING ITEM NUMBERS NOT APPLICABLE

– ITEM NOT ILLUSTRATED

BOEING PROPRIETARY - Copyright © - Unpublished Work - See title page for details.

FIG ITEM	PART NUMBER	1 2 3 4 5 6 7 NOMENCLATURE	EFFECT FROM TO	UNITS PER ASSY
1				
305	233N3209-25	.PANEL ASSY-E/E SUPPLIER CODE: V89954 ELECTRICAL EQUIP NUMBER: M10063 COMPONENT MAINT MANUAL REF: 24-22-71 QUALIFIED I/W DATA: 233N3209-12 -18 -20 -22 -25 -26 -27 ARE ALL INTERCHANGEABLE EXCEPT SUBJECT TO CUST PREFERENCE 233N3209-300 PANEL ASSY IS I/W 233N3209-25 PANEL ASSY T/W S233T100-6004 LIGHTPLATE PRE ALERT SB: 33A0044 FOR OTHER SYS DETAILS SEE: 24-11-52-01 24-22-01-04 24-41-51-01 24-51-02-01 33-13-01-71	002004 006010 950999	1
305	233N3209-1025	.PANEL ASSY-E/E SUPPLIER CODE: V89954 ELECTRICAL EQUIP NUMBER: M10063 COMPONENT MAINT MANUAL REF: 24-22-71 POST ALERT SB: 33A0044 FOR OTHER SYS DETAILS SEE: 24-11-52-01 24-22-01-04 24-41-51-01 24-51-02-01 33-13-01-71	002004 006010 950999	1
310	NAS514P632-5	..SCREW	002004 006010 950999	4
315	233N3209-2	..BASEPLATE ASSY- SUPPLIER CODE: V89954	002004 006010 950999	1

MISSING ITEM NUMBERS NOT APPLICABLE

– ITEM NOT ILLUSTRATED

BOEING PROPRIETARY - Copyright © - Unpublished Work - See title page for details.

FIG ITEM	PART NUMBER	1 2 3 4 5 6 7 NOMENCLATURE	EFFECT FROM TO	UNITS PER ASSY
1				
320	PFSC35-38ASEMB	...STUD ASSY-	002004	4
		SUPPLIER CODE:	006010	
		V72794	950999	
		SPECIFICATION NUMBER:		
		BACS21DX1B		
322	SF6G6CBB5D	...NUT	002004	4
		SUPPLIER CODE:	006010	
		V12324	950999	
		SPECIFICATION NUMBER:		
		BACN10PA06-6		
325	233N3209-3	...BASEPLATE-	002004	1
		SUPPLIER CODE:	006010	
		V89954	950999	
330	NAS1801-06-5	..SCREW	002004	4
			006010	
			950999	
335	MS35338-41	..WASHER	002004	4
			006010	
			950999	
340	69B46200-12	..STANDOFF	002004	4
			006010	
			950999	
342	233N3209-6	..BRACKET ASSY-	002004	RF
		SUPPLIER CODE:	006010	
		V89954	950999	
345	233T3232-12	.PANEL ASSY-APU CONT	002004	1
		SUPPLIER CODE:	006010	
		V89954	950999	
		ELECTRICAL EQUIP NUMBER:		
		M00001		
		COMPONENT MAINT MANUAL REF:		
		49-61-52		
		OPTIONAL PART:		
		233T3232-9		
		V89954		
		FOR OTHER SYS DETAILS SEE:		
		49-41-00-03		
		49-70-00-02		
		33-13-01-71		

MISSING ITEM NUMBERS NOT APPLICABLE

– ITEM NOT ILLUSTRATED

BOEING PROPRIETARY - Copyright © - Unpublished Work - See title page for details.

FIG ITEM	PART NUMBER	1 2 3 4 5 6 7 NOMENCLATURE	EFFECT FROM TO	UNITS PER ASSY
1				
345	233T3232-9	.PANEL ASSY-APU CONT	002004	1
		SUPPLIER CODE:	006010	
		V89954	950999	
		ELECTRICAL EQUIP NUMBER:		
		M00001		
		COMPONENT MAINT MANUAL REF:		
		49-61-52		
		OPTIONAL PART:		
		233T3232-12		
		V89954		
		FOR OTHER SYS DETAILS SEE:		
		49-41-00-03		
		49-70-00-02		
		33-13-01-71		
355	233T3232-2	..BASEPLATE ASSY-	002004	1
		SUPPLIER CODE:	006010	
		V89954	950999	
		ATTACHING PARTS		
- 357	NAS514P632-5	..SCREW	002004	3
			006010	
			950999	
		-------*-------		
360	BACS21DD1B	...STUD ASSY	002004	4
		SUPPLIER CODE:	006010	
		V08524	950999	
		SPECIFICATION NUMBER:		
		BACS21DD1B		
365	SF6G6CBB5D	...NUT	002004	2
		SUPPLIER CODE:	006010	
		V12324	950999	
		SPECIFICATION NUMBER:		
		BACN10PA06-6		
370	NAS1801-06-5	..SCREW	002004	3
			006010	
			950999	
375	MS35338-41	..WASHER	002004	3
			006010	
			950999	
380	69B46200-12	..STANDOFF	002004	3
			006010	
			950999	
385	233T6200-95	..BRACKET	002004	1
			006010	
			950999	

MISSING ITEM NUMBERS NOT APPLICABLE

- ITEM NOT ILLUSTRATED

BOEING PROPRIETARY - Copyright © - Unpublished Work - See title page for details.

FIG ITEM	PART NUMBER	1 2 3 4 5 6 7 NOMENCLATURE	EFFECT FROM TO	UNITS PER ASSY
1				
390	93A152-50	.PANEL ASSY-VOICE RECORDER (CUSTOMER FURNISHED) SUPPLIER CODE: V06141 ELECTRICAL EQUIP NUMBER: M00050 COMPONENT MAINT MANUAL REF: 23-70-01 FOR BREAKDOWN SEE: 23-71-05-01	950999	RF
390	980-6109-028	.PANEL ASSY-VOICE RECORDER (CUSTOMER FURNISHED) SUPPLIER CODE: V97896 ELECTRICAL EQUIP NUMBER: M00050 COMPONENT MAINT MANUAL REF: 23-70-37 FOR BREAKDOWN SEE: 23-71-05-01	002004 006010	RF
390	980-6109-012	.PANEL-VOICE RECORDER (CUSTOMER FURNISHED) SUPPLIER CODE: V97896 ELECTRICAL EQUIP NUMBER: M00050 COMPONENT MAINT MANUAL REF: 23-70-37 FOR BREAKDOWN SEE: 23-71-05-01	002004 006010	RF
390	980-6116-002	.PANEL ASSY-VOICE RECORDER (CUSTOMER FURNISHED) SUPPLIER CODE: V97896 ELECTRICAL EQUIP NUMBER: M00050 COMPONENT MAINT MANUAL REF: 23-70-43 FOR BREAKDOWN SEE: 23-71-05-01	002004 006010	RF

MISSING ITEM NUMBERS NOT APPLICABLE

– ITEM NOT ILLUSTRATED

BOEING PROPRIETARY - Copyright © - Unpublished Work - See title page for details.

FIG ITEM	PART NUMBER	1 2 3 4 5 6 7 NOMENCLATURE	EFFECT FROM TO	UNITS PER ASSY
1				
395	233N3214-28	.PANEL ASSY-LIGHTING CONT SUPPLIER CODE: V89954 ELECTRICAL EQUIP NUMBER: M10056 COMPONENT MAINT MANUAL REF: 33-11-71 QUALIFIED I/W DATA: 233N3214-22 -26 -28 -29 ARE ALL INTERCHANGEABLE EXCEPT SUBJECT TO CUSTOMER PREFERENCE FOR OTHER SYS DETAILS SEE: 33-11-03-04 33-11-51-14 33-13-01-71 33-42-01-05 33-42-02-05	952999	1
395	233N3214-41	.PANEL ASSY-LIGHTING CONT SUPPLIER CODE: V89954 ELECTRICAL EQUIP NUMBER: M10056 COMPONENT MAINT MANUAL REF: 33-11-71 QUALIFIED I/W DATA: THE 233N3214-302 PANEL ASSY IS I/W THE 233N3214-41 PANEL ASSY T/W THE S233T100-6066 LIGHTPLATE AND (2) RC445-131 KNOBS AND (2) TT410-101 KNOBS FOR OTHER SYS DETAILS SEE: 33-11-03-04 33-11-51-14 33-13-01-71 33-42-01-05 33-42-02-05	950951	1

MISSING ITEM NUMBERS NOT APPLICABLE

– ITEM NOT ILLUSTRATED

BOEING PROPRIETARY - Copyright © - Unpublished Work - See title page for details.

FIG ITEM	PART NUMBER	1 2 3 4 5 6 7 NOMENCLATURE	EFFECT FROM TO	UNITS PER ASSY
1				
397	233N3214-31	.PANEL ASSY-LIGHTING CONT SUPPLIER CODE: V89954 ELECTRICAL EQUIP NUMBER: M10056 COMPONENT MAINT MANUAL REF: 33-11-71 QUALIFIED I/W DATA: THE 233N3214-300 PANEL ASSY IS I/W THE 233N3214-31 PANEL ASSY T/W THE S233T100-6003 LIGHTPLATE AND (2) RC445-131 KNOBS AND (2) TT410-101 KNOBS 233N3214-24 -27 -31 -32 -33 ARE ALL INTERCHANGEABLE EXCEPT SUBJECT TO CUSTOMER PREFERENCE OF KORRY OR MASTER SPECIALTIES LIGHTED PUSHBUTTON SWITCHES FOR OTHER SYS DETAILS SEE: 33-11-03-04 33-11-51-14 33-13-01-71 33-42-01-05	002004 006010	1
400	NAS514P632-5	..SCREW	002004 006010 950999	3
405	233N3214-16	..BASEPLATE ASSY- SUPPLIER CODE: V89954	002004 006010	1
410	233N3214-19	..BASEPLATE ASSY- SUPPLIER CODE: V89954	950999	1
415	PFSC35-38ASEMB	...STUD ASSY- SUPPLIER CODE: V72794 SPECIFICATION NUMBER: BACS21DX1B	002004 006010 950999	3
418	SF6G6CBB5D	...NUT SUPPLIER CODE: V12324 SPECIFICATION NUMBER: BACN10PA06-6	002004 006010 950999	3

MISSING ITEM NUMBERS NOT APPLICABLE

— ITEM NOT ILLUSTRATED

BOEING PROPRIETARY - Copyright © - Unpublished Work - See title page for details.

FIG ITEM	PART NUMBER	1 2 3 4 5 6 7 NOMENCLATURE	EFFECT FROM TO	UNITS PER ASSY
1				
420	233N3214-17	...BASEPLATE-	002004	1
		SUPPLIER CODE:	006010	
		V89954		
425	233N3214-20	...BASEPLATE-	950999	1
		SUPPLIER CODE:		
		V89954		
430	NAS1801-06-5	..SCREW-	950999	3
430	BACS12HN06-5	..SCREW-	002004	3
			006010	
435	MS35338-41	..WASHER-	950999	3
435	BACW10EC06S	..WASHER-	002004	3
			006010	
440	69B46200-14	..STANDOFF	002004	3
			006010	
			950999	
445	233N3250-34	..BRACKET	002004	1
			006010	
			950999	
450	BACP10U0337T	.PANEL ASSY	002004	1
			006010	
			950999	

MISSING ITEM NUMBERS NOT APPLICABLE

– ITEM NOT ILLUSTRATED

BOEING PROPRIETARY - Copyright © - Unpublished Work - See title page for details.

FIG ITEM	PART NUMBER	1 2 3 4 5 6 7 NOMENCLATURE	EFFECT FROM TO	UNITS PER ASSY
1				
455	233T3210-28	.PANEL ASSY-XMER LIGHTS SUPPLIER CODE: V89954 ELECTRICAL EQUIP NUMBER: M00043 COMPONENT MAINT MANUAL REF: 33-51-03 QUALIFIED I/W DATA: 233T3210-22 -25 -28 -29 -30 ARE ALL INTERCHANGEABLE EXCEPT SUBJECT TO CUSTOMER PREFERENCE THE 233T3210-300 PANEL ASSY IS I/W THE 233T3210-28 PANEL ASSY T/W THE S233T100-1077 LIGHTPLATE. 233T3210-38 T/W S233T100-6065 CAN REPLACE OR BE REPLACED BY 233T3210-28 T/W S233T100-1077 SUBJECT TO CUSTOMER PREFERENCE OF HAVING OR NOT HAVING SWITCH GUARD PRE ALERT SB: 33A0044 FOR OTHER SYS DETAILS SEE: 33-51-08-01 33-13-01-71 35-21-51-01	002004 006010 950999	1
455	233T3210-1028	.PANEL ASSY-EMER LIGHTS SUPPLIER CODE: V89954 ELECTRICAL EQUIP NUMBER: M00043 COMPONENT MAINT MANUAL REF: 33-51-03 POST ALERT SB: 33A0044 FOR OTHER SYS DETAILS SEE: 33-51-08-01 33-13-01-71 35-21-51-01	002004 006010 950999	1
460	NAS514P632-5	..SCREW	002004 006010 950999	3

MISSING ITEM NUMBERS NOT APPLICABLE

– ITEM NOT ILLUSTRATED

BOEING PROPRIETARY - Copyright © - Unpublished Work - See title page for details.

FIG ITEM	PART NUMBER	1 2 3 4 5 6 7 NOMENCLATURE	EFFECT FROM TO	UNITS PER ASSY
1				
465	233T3210-17	..BASEPLATE ASSY-	002004	1
		SUPPLIER CODE:	006010	
		V89954	950999	
470	BACS21DD1B	...STUD ASSY	002004	4
		SUPPLIER CODE:	006010	
		V08524	950999	
		SPECIFICATION NUMBER:		
		BACS21DD1B		
475	SF6G6CBB5D	...NUT	002004	2
		SUPPLIER CODE:	006010	
		V12324	950999	
		SPECIFICATION NUMBER:		
		BACN10PA06-6		
480	BACP10U0225N	...PANEL	002004	1
			006010	
			950999	
485	NAS1801-06-5	..SCREW	002004	3
			006010	
			950999	
490	MS35338-41	..WASHER	002004	3
			006010	
			950999	
495	69B46200-10	..STANDOFF	002004	3
			006010	
			950999	
500	233T6200-82	..BRACKET	002004	1
			006010	
			950999	

MISSING ITEM NUMBERS NOT APPLICABLE

– ITEM NOT ILLUSTRATED

BOEING PROPRIETARY - Copyright © - Unpublished Work - See title page for details.

FIG ITEM	PART NUMBER	1 2 3 4 5 6 7 NOMENCLATURE	EFFECT FROM TO	UNITS PER ASSY
1				
505	233N3223-39	.PANEL ASSY-ENG START/RAT SUPPLIER CODE: V89954 MISCELLANEOUS DATA: FOR SPARES PROCURE NEXT HIGHER ASSY ELECTRICAL EQUIP NUMBER: M10468 COMPONENT MAINT MANUAL REF: 31-12-01 QUALIFIED I/W DATA: THE 233N3223-300 PANEL ASSY IS I/W THE 233N3223-39 PANEL ASSY T/W THE S233T100-6046 LIGHTPLATE AND (3) BP248-127 KNOBS. PRE ALERT SB: 33A0044 FOR OTHER SYS DETAILS SEE: 29-21-54-01 33-13-01-71 73-21-52-01 74-31-51-01 80-11-09-03	002004 006010 950999	1
505	233N3223-1039	.PANEL ASSY-ENG START/RAT SUPPLIER CODE: V89954 ELECTRICAL EQUIP NUMBER: M10468 COMPONENT MAINT MANUAL REF: 31-12-01 POST ALERT SB: 33A0044 FOR OTHER SYS DETAILS SEE: 29-21-54-01 33-13-01-71 73-21-52-01 74-31-51-01 80-11-09-03	002004 006010 950999	1

MISSING ITEM NUMBERS NOT APPLICABLE

– ITEM NOT ILLUSTRATED

BOEING PROPRIETARY - Copyright © - Unpublished Work - See title page for details.

FIG ITEM	PART NUMBER	1 2 3 4 5 6 7 NOMENCLATURE	EFFECT FROM TO	UNITS PER ASSY
1				
505	233N3223-32	.PANEL ASSY-ENG START/RAT SUPPLIER CODE: V89954 ELECTRICAL EQUIP NUMBER: M10468 COMPONENT MAINT MANUAL REF: 31-12-01 PRE ALERT SB: 33A0044 FOR OTHER SYS DETAILS SEE: 29-21-54-01 33-13-01-71 73-21-52-01 74-31-51-01 80-11-09-03	002004 006010 950999	1
505	233N3223-37	.PANEL ASSY-ENG START/RAT SUPPLIER CODE: V89954 ELECTRICAL EQUIP NUMBER: M10468 COMPONENT MAINT MANUAL REF: 31-12-01 PRE ALERT SB: 33A0044 FOR OTHER SYS DETAILS SEE: 29-21-54-01 33-13-01-71 73-21-52-01 74-31-51-01 80-11-09-03	002004 006010 950999	1
505	233N3223-1032	.PANEL ASSY-ENG START/RAT SUPPLIER CODE: V89954 ELECTRICAL EQUIP NUMBER: M10468 COMPONENT MAINT MANUAL REF: 31-12-01 POST ALERT SB: 33A0044 FOR OTHER SYS DETAILS SEE: 29-21-54-01 33-13-01-71 73-21-52-01 74-31-51-01 80-11-09-03	002004 006010 950999	1

MISSING ITEM NUMBERS NOT APPLICABLE

– ITEM NOT ILLUSTRATED

BOEING PROPRIETARY - Copyright © - Unpublished Work - See title page for details.

FIG ITEM	PART NUMBER	1 2 3 4 5 6 7 NOMENCLATURE	EFFECT FROM TO	UNITS PER ASSY
1				
505	233N3223-1037	.PANEL ASSY-ENG START/RAT SUPPLIER CODE: V89954 ELECTRICAL EQUIP NUMBER: M10468 COMPONENT MAINT MANUAL REF: 31-12-01 POST ALERT SB: 33A0044 FOR OTHER SYS DETAILS SEE: 29-21-54-01 33-13-01-71 73-21-52-01 74-31-51-01 80-11-09-03	002004 006010 950999	1
510	NAS514P632-5	..SCREW	002004 006010 950999	3
515	233N3223-8	..BASEPLATE ASSY- SUPPLIER CODE: V89954	002004 006010 950999	1
525	PFSC35-38ASEMB	...STUD ASSY- SUPPLIER CODE: V72794 SPECIFICATION NUMBER: BACS21DX1B	002004 006010 950999	4
530	SF6G6CBB5D	...NUT SUPPLIER CODE: V12324 SPECIFICATION NUMBER: BACN10PA06-6	002004 006010 950999	4
535	233N3223-9	...BASEPLATE- SUPPLIER CODE: V89954	002004 006010 950999	1
545	NAS1801-06-5	..SCREW- USED ON: 233N3223-39 233N3223-42 233N3223-1039 233N3223-1042	002004 006010 950999	3
545	BACS12CB06-5	..SCREW- USED ON: 233N3223-32 233N3223-27 233N3223-1032 233N3223-1037	002004 006010 950999	3
550	MS35338-41	..WASHER	002004 006010 950999	3

MISSING ITEM NUMBERS NOT APPLICABLE

– ITEM NOT ILLUSTRATED

BOEING PROPRIETARY - Copyright © - Unpublished Work - See title page for details.

FIG ITEM	PART NUMBER	1 2 3 4 5 6 7 NOMENCLATURE	EFFECT FROM TO	UNITS PER ASSY
1				
555	69B46200-13	..STANDOFF	002004 006010 950999	3
556	233N3250-49	..BRACKET	002004 006010 950999	1
560	233N3206-15	.PANEL ASSY-FUEL CONT SUPPLIER CODE: V89954 ELECTRICAL EQUIP NUMBER: M10055 COMPONENT MAINT MANUAL REF: 28-41-71 PRE ALERT SB: 33A0044 28A0105R1 PRE COMPONENT SB: 233N3206-28-03 FOR OTHER SYS DETAILS SEE: 28-22-51-01 28-41-51-01 33-13-01-71	002004 952952	1
560	233N3206-1015	.PANEL ASSY-FUEL CONT SUPPLIER CODE: V89954 ELECTRICAL EQUIP NUMBER: M10055 COMPONENT MAINT MANUAL REF: 28-41-71 POST ALERT SB: 33A0044 PRE ALERT SB: 28A0105R1 PRE COMPONENT SB: 233N3206-28-03 FOR OTHER SYS DETAILS SEE: 28-22-51-01 28-41-51-01 33-13-01-71	002004 952952	1

MISSING ITEM NUMBERS NOT APPLICABLE

– ITEM NOT ILLUSTRATED

BOEING PROPRIETARY - Copyright © - Unpublished Work - See title page for details.

FIG ITEM	PART NUMBER	1 2 3 4 5 6 7 NOMENCLATURE	EFFECT FROM TO	UNITS PER ASSY
1				
560	233N3206-13	.PANEL ASSY-FUEL CONT SUPPLIER CODE: V89954 ELECTRICAL EQUIP NUMBER: M10055 COMPONENT MAINT MANUAL REF: 28-41-71 PRE ALERT SB: 33A0044R1 28A0105R1 PRE COMPONENT SB: 233N3206-28-03 FOR OTHER SYS DETAILS SEE: 28-22-51-01 28-41-51-01 33-13-01-71	002004 952952	1
560	233N3206-14	.PANEL ASSY-FUEL CONT SUPPLIER CODE: V89954 ELECTRICAL EQUIP NUMBER: M10055 COMPONENT MAINT MANUAL REF: 28-41-71 PRE ALERT SB: 33A0044 28A0105R1 PRE COMPONENT SB: 233N3206-28-03 FOR OTHER SYS DETAILS SEE: 28-22-51-01 28-41-51-01 33-13-01-71	002004 952952	1
560	233N3206-16	.PANEL ASSY-FUEL CONT SUPPLIER CODE: V89954 ELECTRICAL EQUIP NUMBER: M10055 COMPONENT MAINT MANUAL REF: 28-41-71 PRE ALERT SB: 33A0044 28A0105R1 PRE COMPONENT SB: 233N3206-28-03 FOR OTHER SYS DETAILS SEE: 28-22-51-01 28-41-51-01 33-13-01-71	002004 952952	1

MISSING ITEM NUMBERS NOT APPLICABLE

– ITEM NOT ILLUSTRATED

BOEING PROPRIETARY - Copyright © - Unpublished Work - See title page for details.

FIG ITEM	PART NUMBER	1 2 3 4 5 6 7 NOMENCLATURE	EFFECT FROM TO	UNITS PER ASSY
1				
560	233N3206-17	.PANEL ASSY-FUEL CONT SUPPLIER CODE: V89954 ELECTRICAL EQUIP NUMBER: M10055 COMPONENT MAINT MANUAL REF: 28-41-71 PRE ALERT SB: 33A0044R1 28A0105R1 PRE COMPONENT SB: 233N3206-28-03 FOR OTHER SYS DETAILS SEE: 28-22-51-01 28-41-51-01 33-13-01-71	002004 952952	1
560	233N3206-1016	.PANEL ASSY-FUEL CONT SUPPLIER CODE: V89954 ELECTRICAL EQUIP NUMBER: M10055 COMPONENT MAINT MANUAL REF: 28-41-71 POST ALERT SB: 33A0044 PRE ALERT SB: 28A0105R1 PRE COMPONENT SB: 233N3206-28-03 FOR OTHER SYS DETAILS SEE: 28-22-51-01 28-41-51-01 33-13-01-71	002004 952952	1

MISSING ITEM NUMBERS NOT APPLICABLE

– ITEM NOT ILLUSTRATED

BOEING PROPRIETARY - Copyright © - Unpublished Work - See title page for details.

FIG ITEM	PART NUMBER	1 2 3 4 5 6 7 NOMENCLATURE	EFFECT FROM TO	UNITS PER ASSY
1				
560	233N3206-1013	.PANEL ASSY-FUEL CONT SUPPLIER CODE: V89954 ELECTRICAL EQUIP NUMBER: M10055 COMPONENT MAINT MANUAL REF: 28-41-71 POST ALERT SB: 33A0044R1 PRE ALERT SB: 28A0105R1 PRE COMPONENT SB: 233N3206-28-03 FOR OTHER SYS DETAILS SEE: 28-22-51-01 28-41-51-01 33-13-01-71	002004 952952	1
560	233N3206-1014	.PANEL ASSY-FUEL CONT SUPPLIER CODE: V89954 ELECTRICAL EQUIP NUMBER: M10055 COMPONENT MAINT MANUAL REF: 28-41-71 POST ALERT SB: 33A0044 PRE ALERT SB: 28A0105R1 PRE COMPONENT SB: 233N3206-28-03 FOR OTHER SYS DETAILS SEE: 28-22-51-01 28-41-51-01 33-13-01-71	002004 952952	1

MISSING ITEM NUMBERS NOT APPLICABLE

– ITEM NOT ILLUSTRATED

BOEING PROPRIETARY - Copyright © - Unpublished Work - See title page for details.

FIG ITEM	PART NUMBER	1 2 3 4 5 6 7 NOMENCLATURE	EFFECT FROM TO	UNITS PER ASSY
1				
560	233N3206-1017	.PANEL ASSY-FUEL CONT SUPPLIER CODE: V89954 ELECTRICAL EQUIP NUMBER: M10055 COMPONENT MAINT MANUAL REF: 28-41-71 POST ALERT SB: 33A0044R1 PRE ALERT SB: 28A0105R1 PRE COMPONENT SB: 233N3206-28-03 FOR OTHER SYS DETAILS SEE: 28-22-51-01 28-41-51-01 33-13-01-71	002004 952952	1
560	233N3206-3015	.PANEL ASSY-FUEL CONT REPLACES 233N3206-1015 SUPPLIER CODE: V89954 ELECTRICAL EQUIP NUMBER: M10055 COMPONENT MAINT MANUAL REF: 28-41-71 POST ALERT SB: 28A0105R1 POST COMPONENT SB: 233N3206-28-03 FOR OTHER SYS DETAILS SEE: 28-22-51-01 28-41-51-01 33-13-01-71	002004 952952	1
560	233N3206-3016	.PANEL ASSY-FUEL CONT REPLACES 233N3206-1016 SUPPLIER CODE: V89954 ELECTRICAL EQUIP NUMBER: M10055 COMPONENT MAINT MANUAL REF: 28-41-71 POST ALERT SB: 28A0105R1 PRE COMPONENT SB: 233N3206-28-03 FOR OTHER SYS DETAILS SEE: 28-22-51-01 28-41-51-01 33-13-01-71	002004 952952	1

MISSING ITEM NUMBERS NOT APPLICABLE

– ITEM NOT ILLUSTRATED

BOEING PROPRIETARY - Copyright © - Unpublished Work - See title page for details.

FIG ITEM	PART NUMBER	1 2 3 4 5 6 7 NOMENCLATURE	EFFECT FROM TO	UNITS PER ASSY
1				
560	233N3206-3013	.PANEL ASSY-FUEL CONT REPLACES 233N3206-1013 SUPPLIER CODE: V89954 ELECTRICAL EQUIP NUMBER: M10055 COMPONENT MAINT MANUAL REF: 28-41-71 POST ALERT SB: 28A0105R1 POST COMPONENT SB: 233N3206-28-03 FOR OTHER SYS DETAILS SEE: 28-22-51-01 28-41-51-01 33-13-01-71	002004 952952	1
560	233N3206-3014	.PANEL ASSY-FUEL CONT REPLACES 233N3206-1014 SUPPLIER CODE: V89954 ELECTRICAL EQUIP NUMBER: M10055 COMPONENT MAINT MANUAL REF: 28-41-71 POST ALERT SB: 28A0105R1 POST COMPONENT SB: 233N3206-28-03 FOR OTHER SYS DETAILS SEE: 28-22-51-01 28-41-51-01 33-13-01-71	002004 952952	1
560	233N3206-3017	.PANEL ASSY-FUEL CONT REPLACES 233N3206-1017 SUPPLIER CODE: V89954 ELECTRICAL EQUIP NUMBER: M10055 COMPONENT MAINT MANUAL REF: 28-41-71 POST ALERT SB: 28A0105R1 POST COMPONENT SB: 233N3206-28-03 FOR OTHER SYS DETAILS SEE: 28-22-51-01 28-41-51-01 33-13-01-71	002004 952952	1

MISSING ITEM NUMBERS NOT APPLICABLE

– ITEM NOT ILLUSTRATED

BOEING PROPRIETARY - Copyright © - Unpublished Work - See title page for details.

FIG ITEM	PART NUMBER	1 2 3 4 5 6 7 NOMENCLATURE	EFFECT FROM TO	UNITS PER ASSY
1				
560	233N3206-2013	.PANEL ASSY-FUEL CONT REPLACES 233N3206-13 SUPPLIER CODE: V89954 ELECTRICAL EQUIP NUMBER: M10055 COMPONENT MAINT MANUAL REF: 28-41-71 POST ALERT SB: 28A0105R1 POST COMPONENT SB: 233N3206-28-03 FOR OTHER SYS DETAILS SEE: 28-22-51-01 28-41-51-01 33-13-01-71	002004 952952	1
560	233N3206-2014	.PANEL ASSY-FUEL CONT REPLACES 233N3206-14 SUPPLIER CODE: V89954 ELECTRICAL EQUIP NUMBER: M10055 COMPONENT MAINT MANUAL REF: 28-41-71 POST ALERT SB: 28A0105R1 POST COMPONENT SB: 233N3206-28-03 FOR OTHER SYS DETAILS SEE: 28-22-51-01 28-41-51-01 33-13-01-71	002004 952952	1
561	233N3206-2015	.PANEL ASSY-FUEL CONT REPLACES 233N3206-15 SUPPLIER CODE: V89954 ELECTRICAL EQUIP NUMBER: M10055 COMPONENT MAINT MANUAL REF: 28-41-71 POST ALERT SB: 28A0105R1 POST COMPONENT SB: 233N3206-28-03 FOR OTHER SYS DETAILS SEE: 28-22-51-01 28-41-51-01 33-13-01-71	002004 952952	1

MISSING ITEM NUMBERS NOT APPLICABLE

– ITEM NOT ILLUSTRATED

BOEING PROPRIETARY - Copyright © - Unpublished Work - See title page for details.

FIG ITEM	PART NUMBER	1 2 3 4 5 6 7 NOMENCLATURE	EFFECT FROM TO	UNITS PER ASSY
1				
561	233N3206-2016	.PANEL ASSY-FUEL CONT REPLACES 233N3206-16 SUPPLIER CODE: V89954 ELECTRICAL EQUIP NUMBER: M10055 COMPONENT MAINT MANUAL REF: 28-41-71 POST ALERT SB: 28A0105R1 POST COMPONENT SB: 233N3206-28-03 FOR OTHER SYS DETAILS SEE: 28-22-51-01 28-41-51-01 33-13-01-71	002004 952952	1
561	233N3206-2017	.PANEL ASSY-FUEL CONT REPLACES 233N3206-17 SUPPLIER CODE: V89954 ELECTRICAL EQUIP NUMBER: M10055 COMPONENT MAINT MANUAL REF: 28-41-71 POST ALERT SB: 28A0105R1 POST COMPONENT SB: 233N3206-28-03 FOR OTHER SYS DETAILS SEE: 28-22-51-01 28-41-51-01 33-13-01-71	002004 952952	1
565	NAS514P632-5	..SCREW	002004 952952	3
570	233T3235-6	..BASEPLATE ASSY- SUPPLIER CODE: V89954	002004 952952	1
575	PFSC35-38ASEMB	...STUD ASSY- SUPPLIER CODE: V72794 SPECIFICATION NUMBER: BACS21DX1B PRE ALERT SB: 28A0105R1 PRE COMPONENT SB: 233N3206-28-03	002004 952952	4

MISSING ITEM NUMBERS NOT APPLICABLE

– ITEM NOT ILLUSTRATED

BOEING PROPRIETARY - Copyright © - Unpublished Work - See title page for details.

FIG ITEM	PART NUMBER	1 2 3 4 5 6 7 NOMENCLATURE	EFFECT FROM TO	UNITS PER ASSY
1				
575	BACS21DD1B	...STUD ASSY-	002004	4
		POST ALERT SB:	952952	
		28A0105R1		
		POST COMPONENT SB:		
		233N3206-28-03		
580	SF6G6CBB5D	...NUT	002004	3
		SUPPLIER CODE:	952952	
		V12324		
		SPECIFICATION NUMBER:		
		BACN10PA06-6		
585	BACP10U0412N	...BASEPLATE	002004	1
			952952	
590	NAS1801-06-5	..SCREW-	002004	3
		MISCELLANEOUS DATA:	952952	
		SPEC BACS12CB06-5		
		USED ON:		
		233N3206-15		
		233N3206-16		
		233N3206-17		
		233N3206-2015		
		233N3206-2016		
		233N3206-2017		
		233N3206-3015		
		233N3206-3016		
		233N3206-3017		
590	BACS12CB06-5	..SCREW-	002004	3
		USED ON:	952952	
		233N3206-13		
		233N3206-14		
		PRE ALERT SB:		
		28A0105R1		
		PRE COMPONENT SB:		
		233N3206-28-03		
590	NAS1635-06-5	..SCREW-	002004	3
		OPTIONAL PART:	952952	
		NAS1801-06-5		
		USED ON:		
		233N3206-2013		
		233N3206-2014		
		233N3206-3013		
		233N3206-3014		
		POST ALERT SB:		
		28A0105R1		
		POST COMPONENT SB:		
		233N3206-28-03		

MISSING ITEM NUMBERS NOT APPLICABLE

— ITEM NOT ILLUSTRATED

BOEING PROPRIETARY - Copyright © - Unpublished Work - See title page for details.

FIG ITEM	PART NUMBER	1 2 3 4 5 6 7 NOMENCLATURE	EFFECT FROM TO	UNITS PER ASSY
1				
590	NAS1801-06-5	..SCREW-	002004	3
		MISCELLANEOUS DATA:	952952	
		SPEC BACS12CB06-5		
		OPTIONAL PART:		
		NAS1635-06-5		
		USED ON:		
		233N3206-2013		
		233N3206-2014		
		233N3206-3013		
		233N3206-3014		
		POST ALERT SB:		
		28A0105R1		
		POST COMPONENT SB:		
		233N3206-28-03		
595	MS35338-41	..WASHER	002004	3
			952952	
600	69B46200-11	..STANDOFF	002004	3
			952952	
605	233N3250-38	..BRACKET	002004	1
			952952	
610	233N3206-19	.PANEL ASSY-FUEL CONT	006010	1
		SUPPLIER CODE:	950951	
		V89954	953999	
		ELECTRICAL EQUIP NUMBER:		
		M10055		
		COMPONENT MAINT MANUAL REF:		
		28-41-71		
		QUALIFIED I/W DATA:		
		THE 233N3206-300 PANEL		
		ASSY IS I/W THE		
		233N3206-19 PANEL ASSY		
		T/W THE S233T100-1106		
		LIGHTPLATE		
		PRE ALERT SB:		
		28A0105R1		
		PRE COMPONENT SB:		
		233N3206-28-03		
		FOR OTHER SYS DETAILS SEE:		
		28-22-51-01		
		28-41-51-01		
		33-13-01-71		

MISSING ITEM NUMBERS NOT APPLICABLE

— ITEM NOT ILLUSTRATED

BOEING PROPRIETARY - Copyright © - Unpublished Work - See title page for details.

FIG ITEM	PART NUMBER	1 2 3 4 5 6 7 NOMENCLATURE	EFFECT FROM TO	UNITS PER ASSY
1				
610	233N3206-3019	.PANEL ASSY-FUEL CONT REPLACES 233N3206-1019 SUPPLIER CODE: V89954 ELECTRICAL EQUIP NUMBER: M10055 COMPONENT MAINT MANUAL REF: 28-41-71 POST ALERT SB: 28A0105R1 POST COMPONENT SB: 233N3206-28-03 FOR OTHER SYS DETAILS SEE: 28-22-51-01 28-41-51-01 33-13-01-71	006010 950951 953999	1
615	NAS514P632-5	..SCREW	006010 950951 953999	4
620	233T3235-18	..BASEPLATE ASSY- SUPPLIER CODE: V89954	006010 950951 953999	1
625	PFSC35-38ASEMB	...STUD ASSY SUPPLIER CODE: V72794 SPECIFICATION NUMBER: BACS21DX1B	006010 950951 953999	4
630	SF6G6CBB5D	...NUT- SUPPLIER CODE: V12324	006010 950951 953999	4
635	BACP10U0412N	...BASEPLATE	006010 950951 953999	1
640	BACS12HN06-5	..SCREW- PRE ALERT SB: 28A0105R1 PRE COMPONENT SB: 233N3206-28-03	006010 950951 953999	4
640	BACS12HN06-5	..SCREW- OPTIONAL PART: NAS1801-06-5 POST ALERT SB: 28A0105R1 POST COMPONENT SB: 233N3206-28-03	006010 950951 953999	4

MISSING ITEM NUMBERS NOT APPLICABLE

– ITEM NOT ILLUSTRATED

BOEING PROPRIETARY - Copyright © - Unpublished Work - See title page for details.

FIG ITEM	PART NUMBER	1 2 3 4 5 6 7 NOMENCLATURE	EFFECT FROM TO	UNITS PER ASSY
1				
640	NAS1801-06-5	..SCREW-	006010	4
		OPTIONAL PART:	950951	
		BACS12HN06-5	953999	
		POST ALERT SB:		
		28A0105R1		
		POST COMPONENT SB:		
		233N3206-28-03		
645	BACW10EC06S	..WASHER-	006010	4
		PRE ALERT SB:	950951	
		28A0105R1	953999	
		PRE COMPONENT SB:		
		233N3206-28-03		
645	BACW10EC06S	..WASHER-	006010	4
		OPTIONAL PART:	950951	
		MS35338-41	953999	
		POST ALERT SB:		
		28A0105R1		
		POST COMPONENT SB:		
		233N3206-28-03		
645	MS35338-41	..WASHER-	006010	4
		OPTIONAL PART:	950951	
		BACW10EC06S	953999	
		POST ALERT SB:		
		28A0105R1		
		POST COMPONENT SB:		
		233N3206-28-03		
650	69B46200-11	..STANDOFF	006010	4
			950951	
			953999	
655	233N3250-64	..BRACKET	006010	1
			950951	
			953999	
663	10080-0101	.INDICATOR ASSY-INTEGRATED	002004	RF
		FUEL QTY	006010	
		SUPPLIER CODE:	950999	
		V89305		
		SPECIFICATION NUMBER:		
		S345N001-001		
		COMPONENT MAINT MANUAL REF:		
		28-42-08		
		OPTIONAL PART:		
		10080-0201		
		V89305		
		FOR BREAKDOWN SEE:		
		28-41-04-02		

MISSING ITEM NUMBERS NOT APPLICABLE

– ITEM NOT ILLUSTRATED

BOEING PROPRIETARY - Copyright © - Unpublished Work - See title page for details.

FIG ITEM	PART NUMBER	1 2 3 4 5 6 7 NOMENCLATURE	EFFECT FROM TO	UNITS PER ASSY
1				
663	10080-0201	.INDICATOR ASSY-INTEGRATED FUEL QTY SUPPLIER CODE: V89305 FUNCTIONAL DESCRIPTION: MODULE DISPLAYS INDIVIDUAL TANK QUANTITY, TOTAL QUANTITY & TEMPERATURE OF MAIN TANK SPECIFICATION NUMBER: S345N001-001 COMPONENT MAINT MANUAL REF: 28-42-08 OPTIONAL PART: 10080-0101 V89305 FOR BREAKDOWN SEE: 28-41-04-02	002004 006010 950999	RF
665	233N3204-19	.PANEL ASSY-ANTI-ICE SUPPLIER CODE: V89954 ELECTRICAL EQUIP NUMBER: M10397 COMPONENT MAINT MANUAL REF: 30-11-72 QUALIFIED I/W DATA: 233N3204-300 PANEL ASSY IS I/W 233N3204-19 PANEL ASSY T/W S233T100-1070 LIGHTPLATE PRE ALERT SB: 33A0044 FOR OTHER SYS DETAILS SEE: 30-11-51-01 30-21-51-01 33-13-01-71	002004 006010 950999	1

MISSING ITEM NUMBERS NOT APPLICABLE

– ITEM NOT ILLUSTRATED

BOEING PROPRIETARY - Copyright © - Unpublished Work - See title page for details.

FIG ITEM	PART NUMBER	1 2 3 4 5 6 7 NOMENCLATURE	EFFECT FROM TO	UNITS PER ASSY
1				
665	233N3204-1019	.PANEL ASSY-ANTI-ICE SUPPLIER CODE: V89954 ELECTRICAL EQUIP NUMBER: M10397 COMPONENT MAINT MANUAL REF: 30-11-72 POST ALERT SB: 33A0044 FOR OTHER SYS DETAILS SEE: 30-11-51-01 30-21-51-01 33-13-01-71	002004 006010 950999	1
670	NAS514P632-5	..SCREW	002004 006010 950999	3
675	233N3204-7	..BASEPLATE ASSY- SUPPLIER CODE: V89954	002004 006010 950999	1
680	PFSC35-38ASEMB	...STUD ASSY- SUPPLIER CODE: V72794 SPECIFICATION NUMBER: BACS21DX1B	002004 006010 950999	4
685	SF6G6CBB5D	...NUT SUPPLIER CODE: V12324 SPECIFICATION NUMBER: BACN10PA06-6	002004 006010 950999	2
690	233N3204-8	...BASEPLATE- SUPPLIER CODE: V89954	002004 006010 950999	1
695	NAS1801-06-5	..SCREW	002004 006010 950999	3
700	MS35338-41	..WASHER	002004 006010 950999	3
705	69B46200-11	..STANDOFF	002004 006010 950999	3
710	233N3250-56	..BRACKET	002004 006010 950999	1

MISSING ITEM NUMBERS NOT APPLICABLE

— ITEM NOT ILLUSTRATED

BOEING PROPRIETARY - Copyright © - Unpublished Work - See title page for details.

FIG ITEM	PART NUMBER	1 2 3 4 5 6 7 NOMENCLATURE	EFFECT FROM TO	UNITS PER ASSY
1				
750	233N3201-11	.PANEL ASSY-RAIN REPELLENT AND WIPER SUPPLIER CODE: V89954 ELECTRICAL EQUIP NUMBER: M10023 COMPONENT MAINT MANUAL REF: 30-42-01 QUALIFIED I/W DATA: 233N3201-11 PANEL ASSY T/W S233T100-1074 LIGHTPLATE AND BP248-127 KNOB IS I/W 233N3201-300 FOR OTHER SYS DETAILS SEE: 30-42-51-01 30-43-51-01 33-13-01-71	002004 006010 950999	1
755	NAS514P632-5	..SCREW	002004 006010 950999	3
760	233N3201-8	..BASEPLATE ASSY- SUPPLIER CODE: V89954	002004 006010 950999	1
765	NAS1801-6-5	..SCREW	002004 006010 950999	3
770	MS35338-41	..WASHER	002004 006010 950999	3
775	69B46200-5	..STANDOFF	002004 006010 950999	3
780	233N3250-6	..BRACKET-CONN.	002004 006010 950999	1

MISSING ITEM NUMBERS NOT APPLICABLE

— ITEM NOT ILLUSTRATED

BOEING PROPRIETARY - Copyright © - Unpublished Work - See title page for details.

FIG ITEM	PART NUMBER	1 2 3 4 5 6 7 NOMENCLATURE	EFFECT FROM TO	UNITS PER ASSY
1				
790	233T3217-41	.PANEL ASSY-ANTI-COLLISION AND LDG SUPPLIER CODE: V89954 ELECTRICAL EQUIP NUMBER: M00056 COMPONENT MAINT MANUAL REF: 33-44-72 QUALIFIED I/W DATA: 233T3217-40 -41 -42 ARE ALL INTERCHANGEABLE EXCEPT SUBJECT TO CUSTOMER PREFERENCE THE 233T3217-300 PANEL ASSY IS I/W THE 233T3217-41 PANEL ASSY T/W THE S233T100-6030 LIGHTPLATE. FOR OTHER SYS DETAILS SEE: 33-41-52-01 33-42-52-01 33-43-51-01 33-44-51-01 33-13-01-71	002004 006010 950999	1
795	NAS514P632-5	..SCREW	002004 006010 950999	4
800	233N3210-7	..BASEPLATE ASSY- SUPPLIER CODE: V89954	002004 006010 950999	1
805	BACS21DD1B	...STUD ASSY SUPPLIER CODE: V08524 SPECIFICATION NUMBER: BACS21DD1B	002004 006010 950999	4
810	SF6G6CBB5D	...NUT SUPPLIER CODE: V12324 SPECIFICATION NUMBER: BACN10PA06-6	002004 006010 950999	4
815	233N3210-8	...BASEPLATE- SUPPLIER CODE: V89954	002004 006010 950999	1
820	BACS12HN06-6	..SCREW- OPTIONAL PART: NAS1801-06-6	002004 006010 950999	4
820	NAS1801-06-6	..SCREW- OPTIONAL PART: BACS12HN06-6	002004 006010 950999	4

MISSING ITEM NUMBERS NOT APPLICABLE

– ITEM NOT ILLUSTRATED

BOEING PROPRIETARY - Copyright © - Unpublished Work - See title page for details.

FIG ITEM	PART NUMBER	1 2 3 4 5 6 7 NOMENCLATURE	EFFECT FROM TO	UNITS PER ASSY
1				
825	NAS620-6	..WASHER	002004 006010 950999	8
830	BACW10EC06CD	..WASHER- OPTIONAL PART: BACW10EC06S	002004 006010 950999	4
830	BACW10EC06S	..WASHER- OPTIONAL PART: BACW10EC06CD	002004 006010 950999	4
835	69B46200-5	..STANDOFF	002004 006010 950999	2
840	233T6200-66	..STANDOFF	002004 006010 950999	2
845	233T6200-70	..BRACKET	002004 006010 950999	1

MISSING ITEM NUMBERS NOT APPLICABLE

– ITEM NOT ILLUSTRATED

BOEING PROPRIETARY - Copyright © - Unpublished Work - See title page for details.

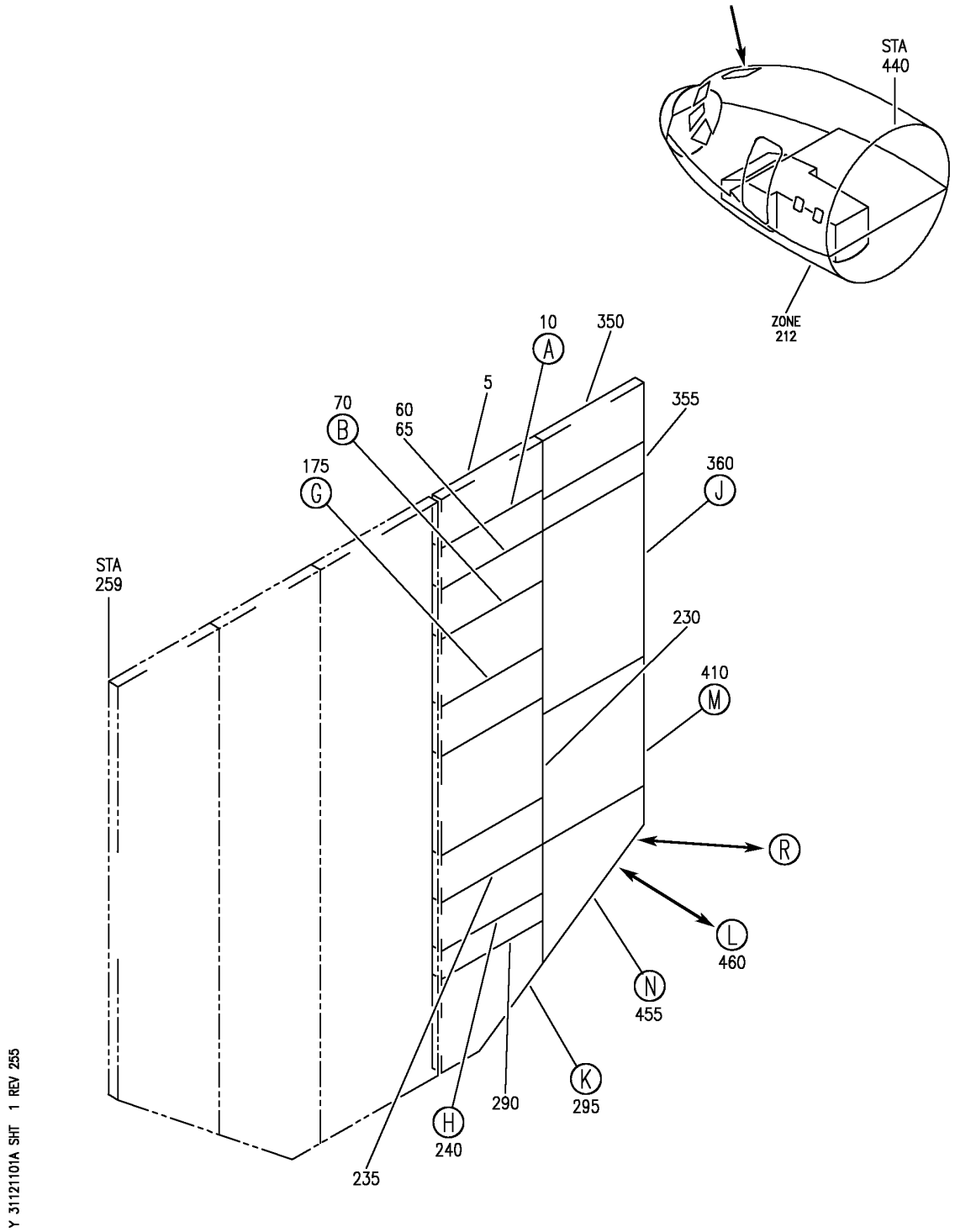

PANEL INSTL-P5 OVHD (INDICATING/RECORDING SYSTEMS ONLY)
FIGURE 1A (SHEET 1)

BOEING PROPRIETARY - Copyright © - Unpublished Work - See title page for details.

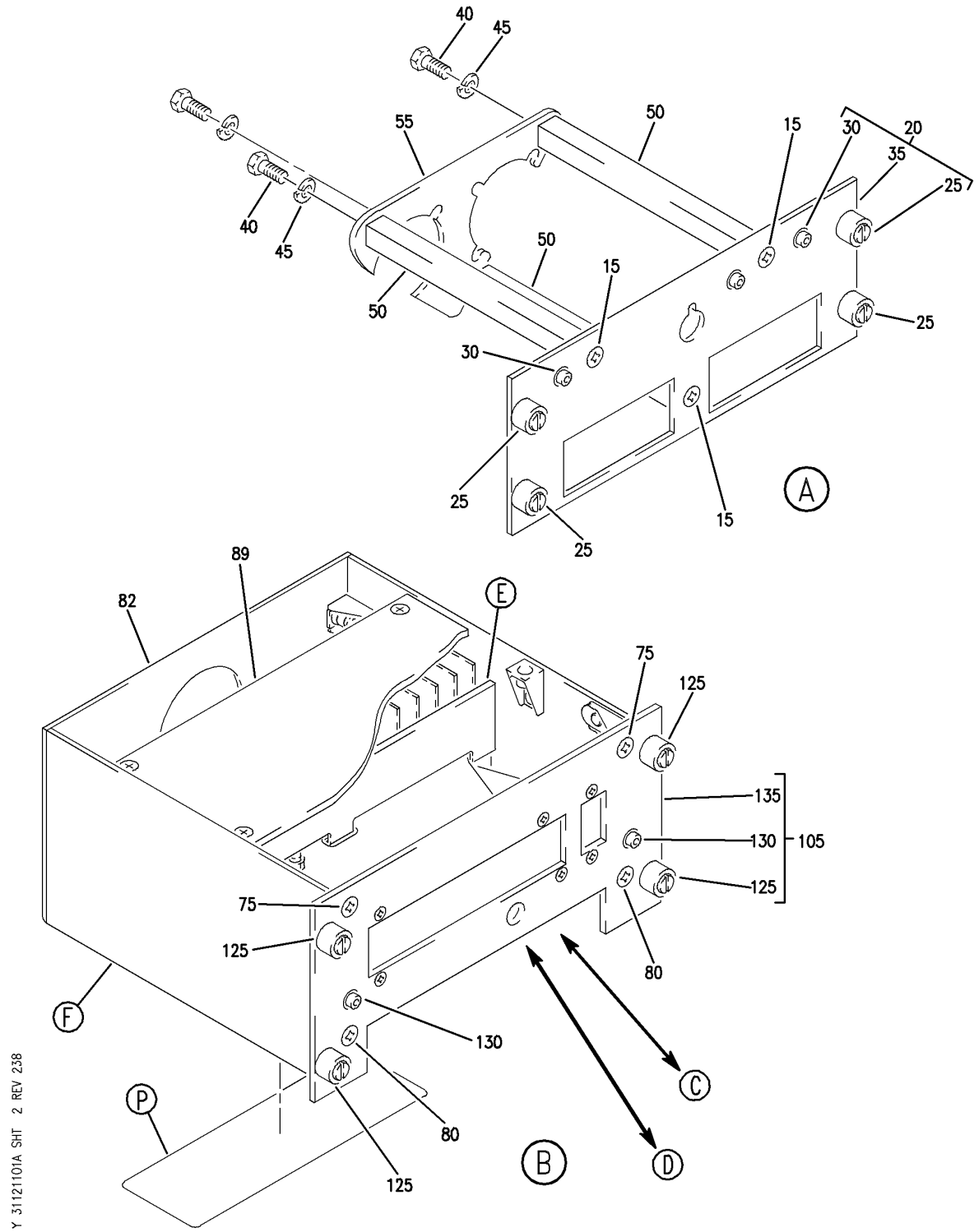

PANEL INSTL-P5 OVHD (INDICATING/RECORDING SYSTEMS ONLY)
FIGURE 1A (SHEET 2)

BOEING PROPRIETARY - Copyright © - Unpublished Work - See title page for details.

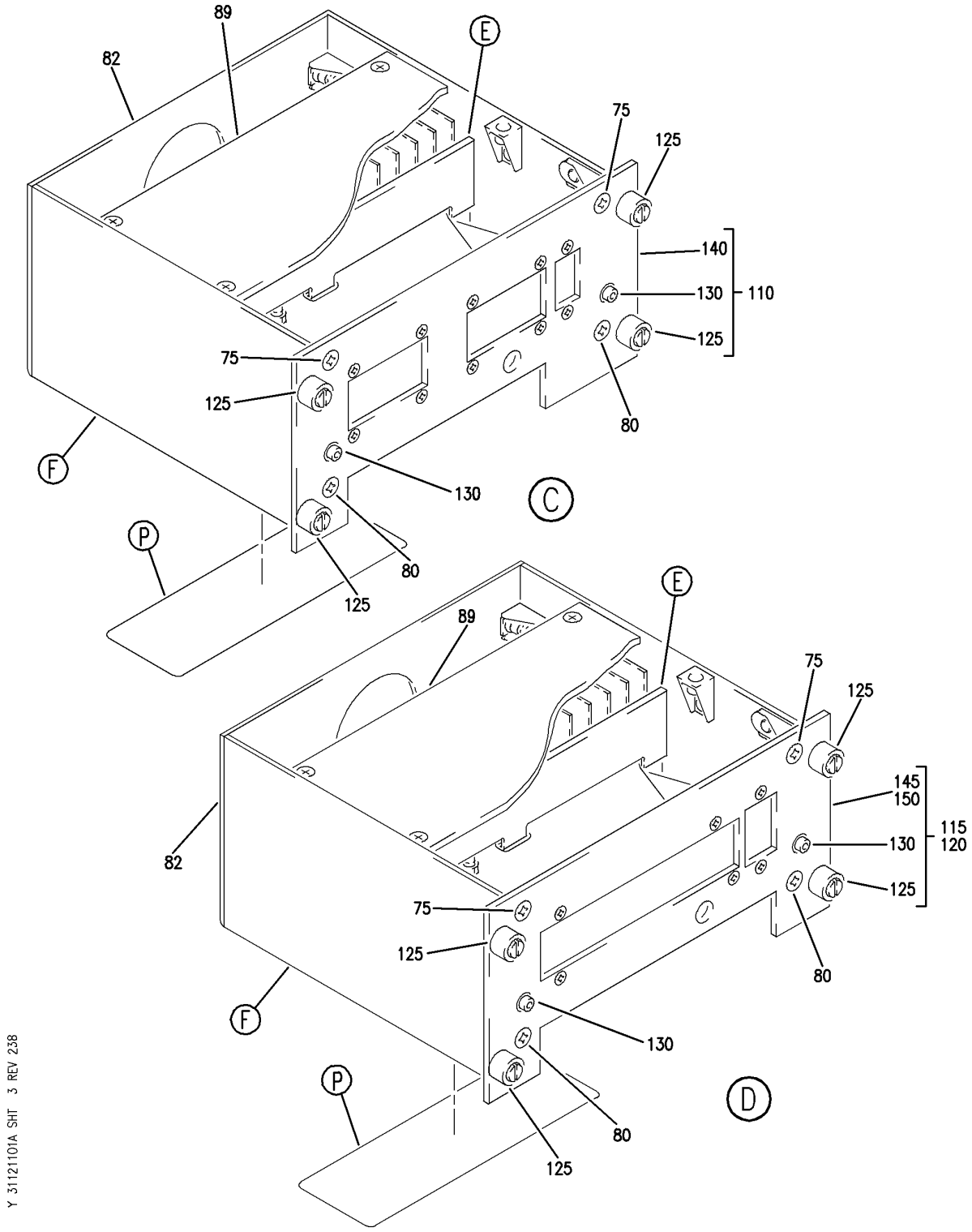

PANEL INSTL-P5 OVHD (INDICATING/RECORDING SYSTEMS ONLY)
FIGURE 1A (SHEET 3)

BOEING PROPRIETARY - Copyright © - Unpublished Work - See title page for details.

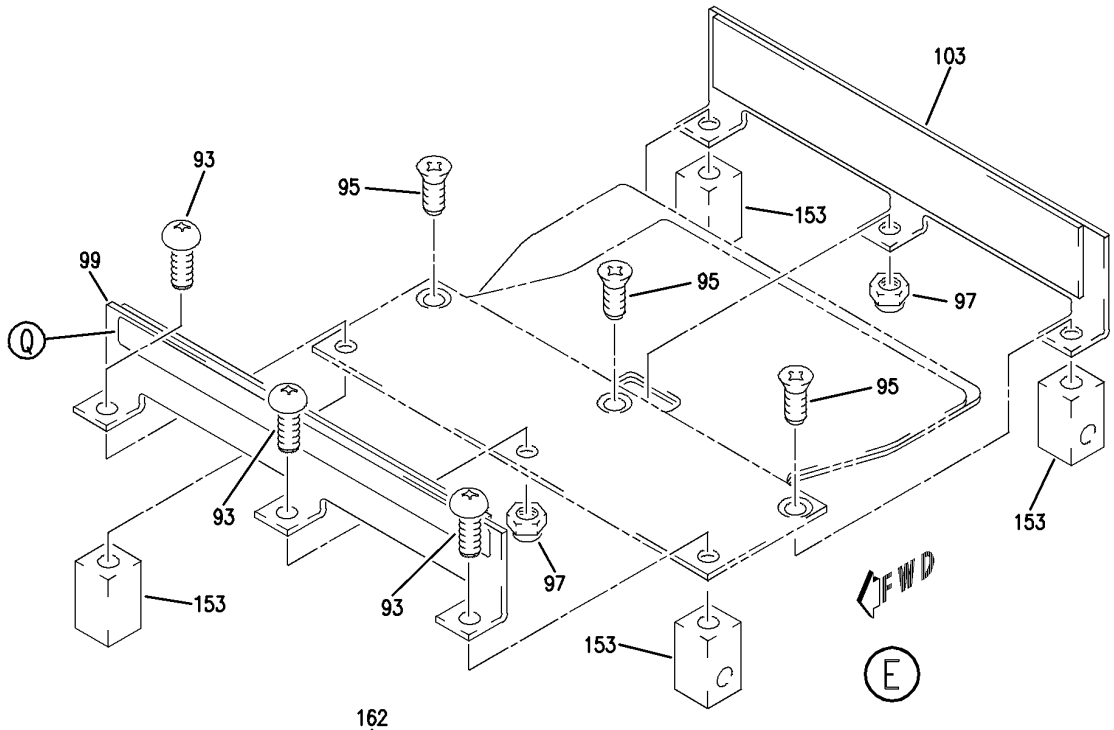

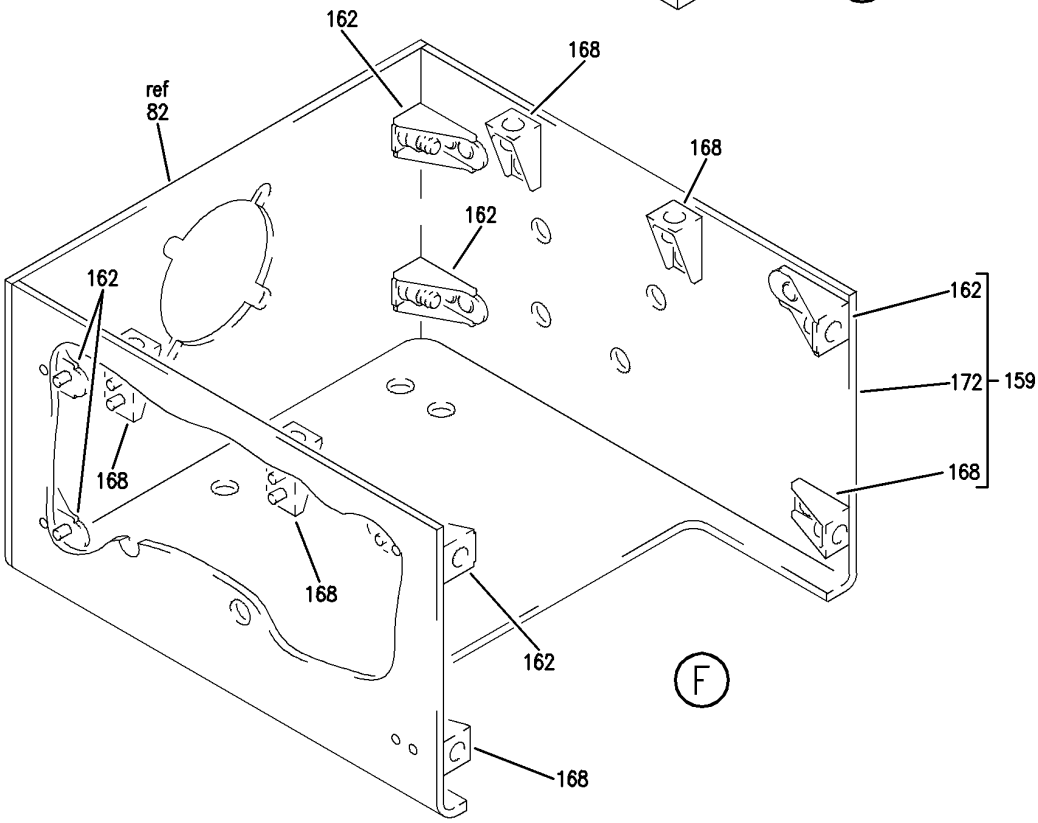

Y 31121101A SHT 4 REV 238

PANEL INSTL-P5 OVHD (INDICATING/RECORDING SYSTEMS ONLY)
FIGURE 1A (SHEET 4)

BOEING PROPRIETARY - Copyright © - Unpublished Work - See title page for details.

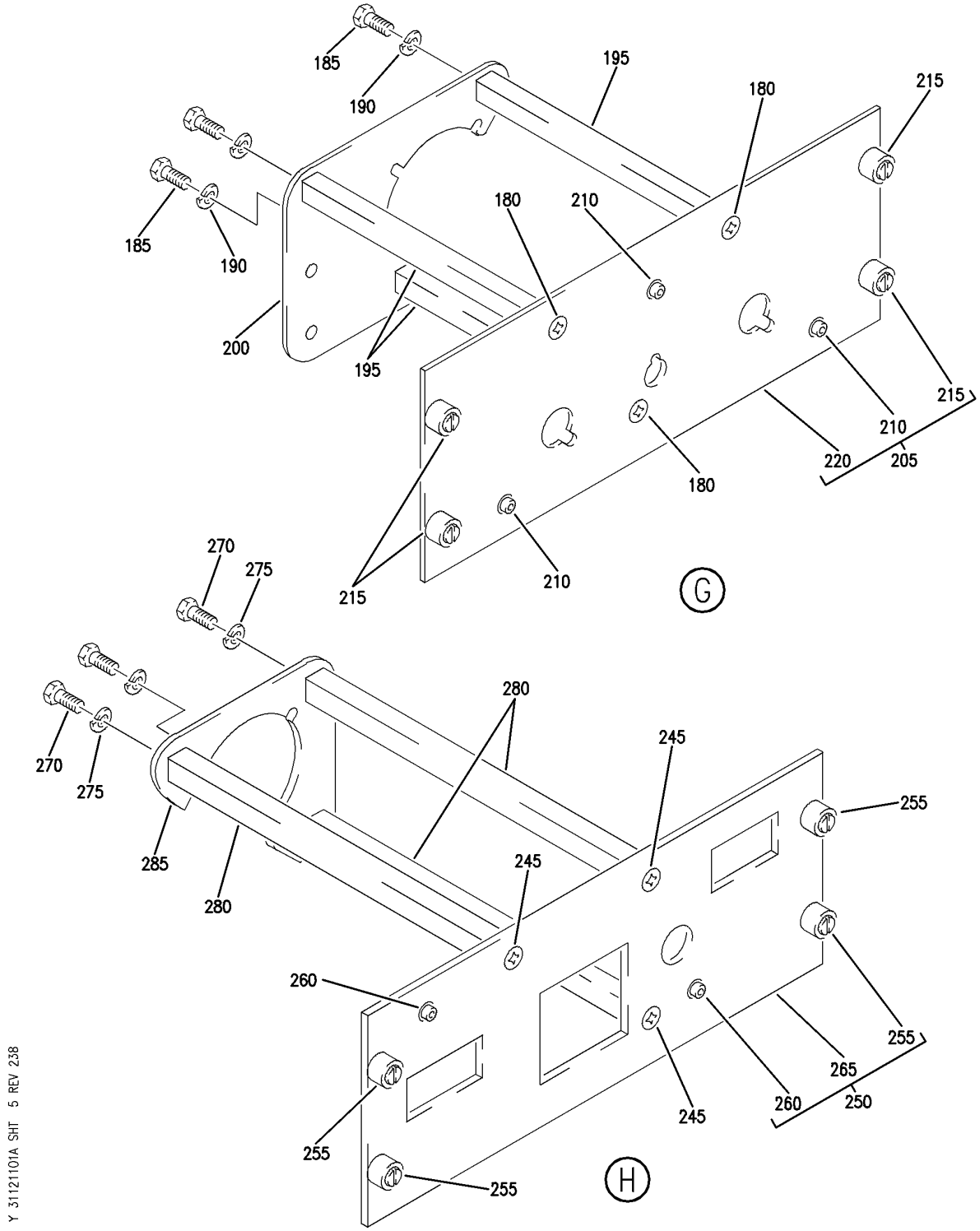

PANEL INSTL-P5 OVHD (INDICATING/RECORDING SYSTEMS ONLY)
FIGURE 1A (SHEET 5)

BOEING PROPRIETARY - Copyright © - Unpublished Work - See title page for details.

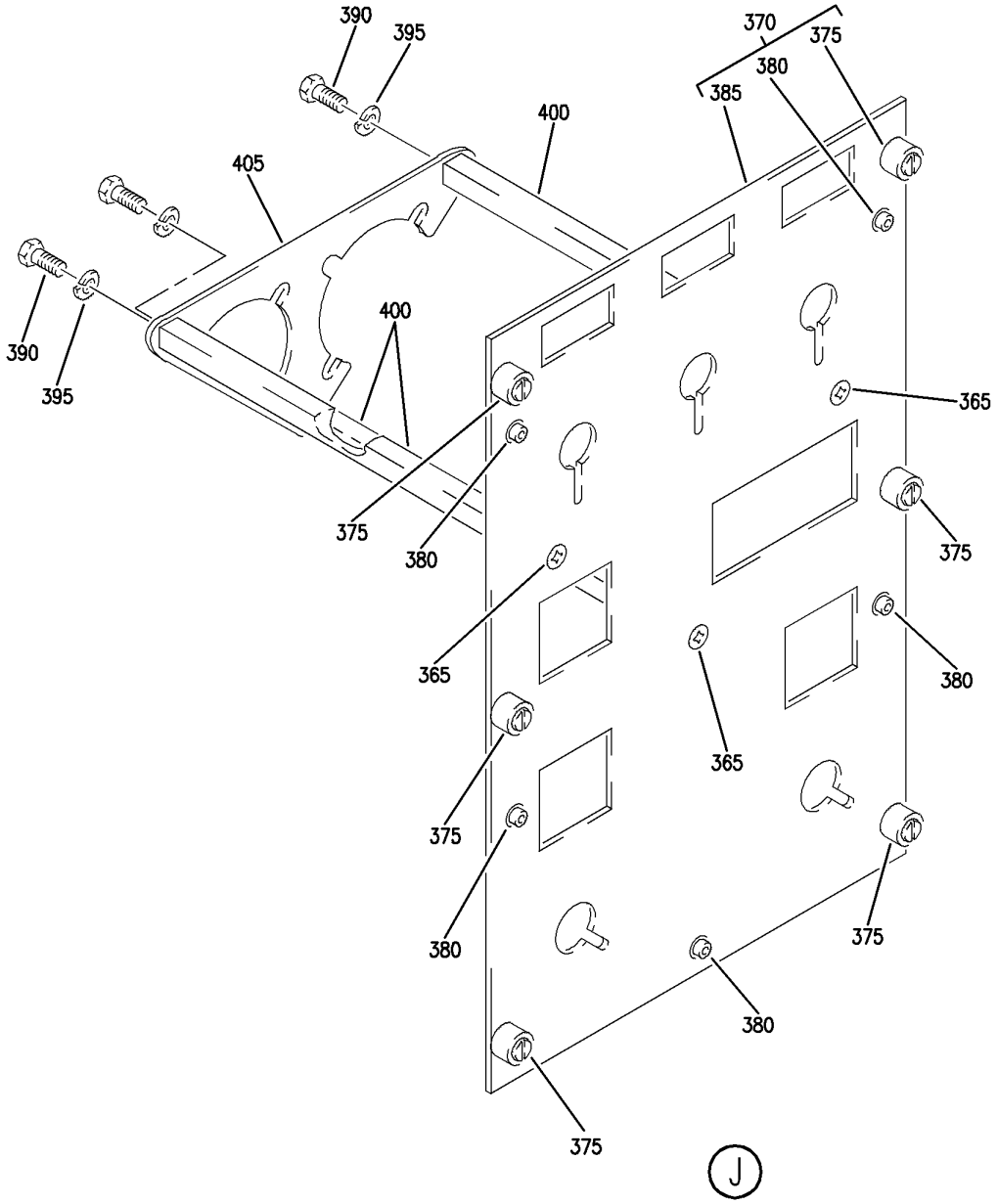

Y 31121101A SHT 6 REV 238

PANEL INSTL-P5 OVHD (INDICATING/RECORDING SYSTEMS ONLY)
FIGURE 1A (SHEET 6)

BOEING PROPRIETARY - Copyright © - Unpublished Work - See title page for details.

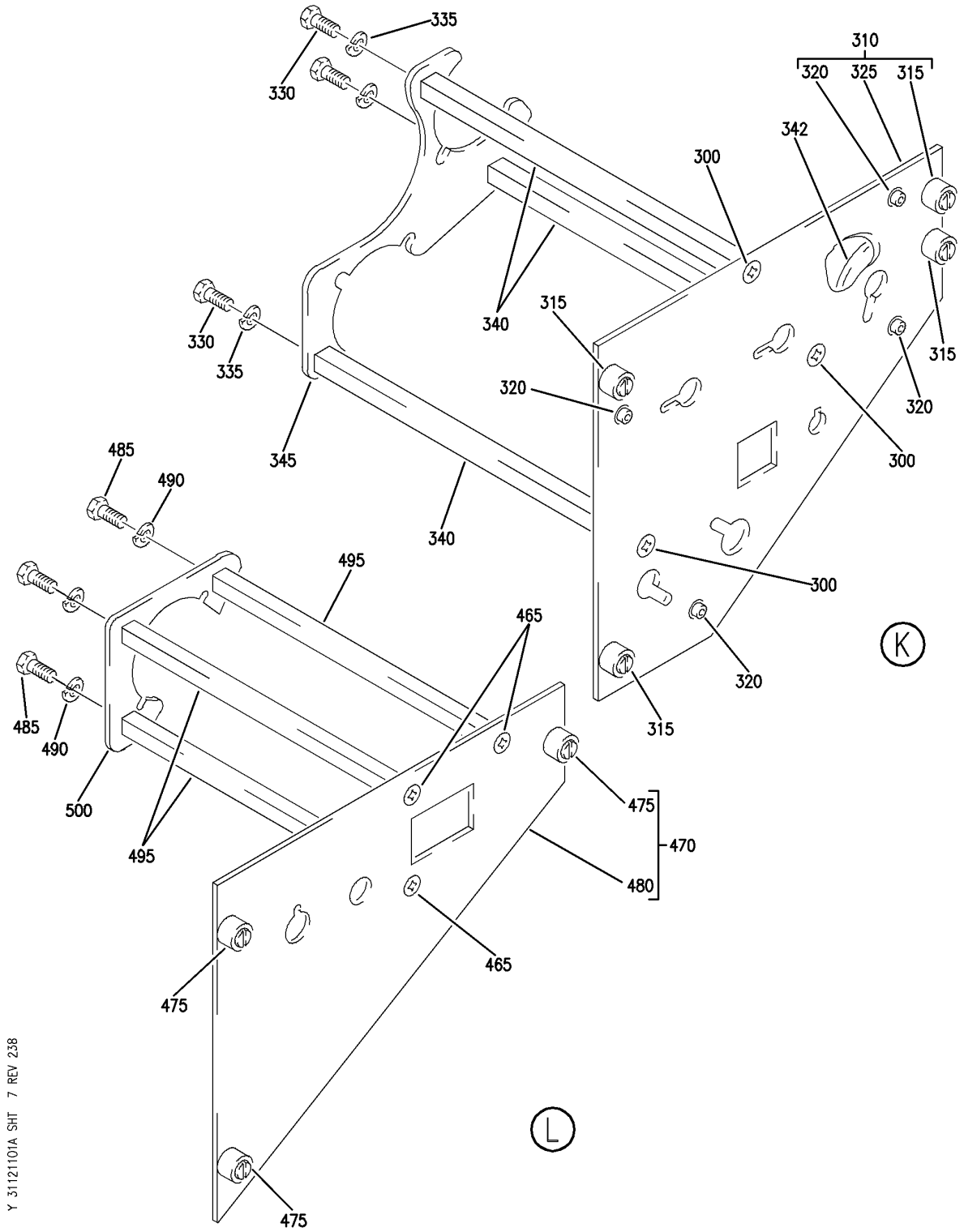

PANEL INSTL-P5 OVHD (INDICATING/RECORDING SYSTEMS ONLY)
FIGURE 1A (SHEET 7)

BOEING PROPRIETARY - Copyright © - Unpublished Work - See title page for details.

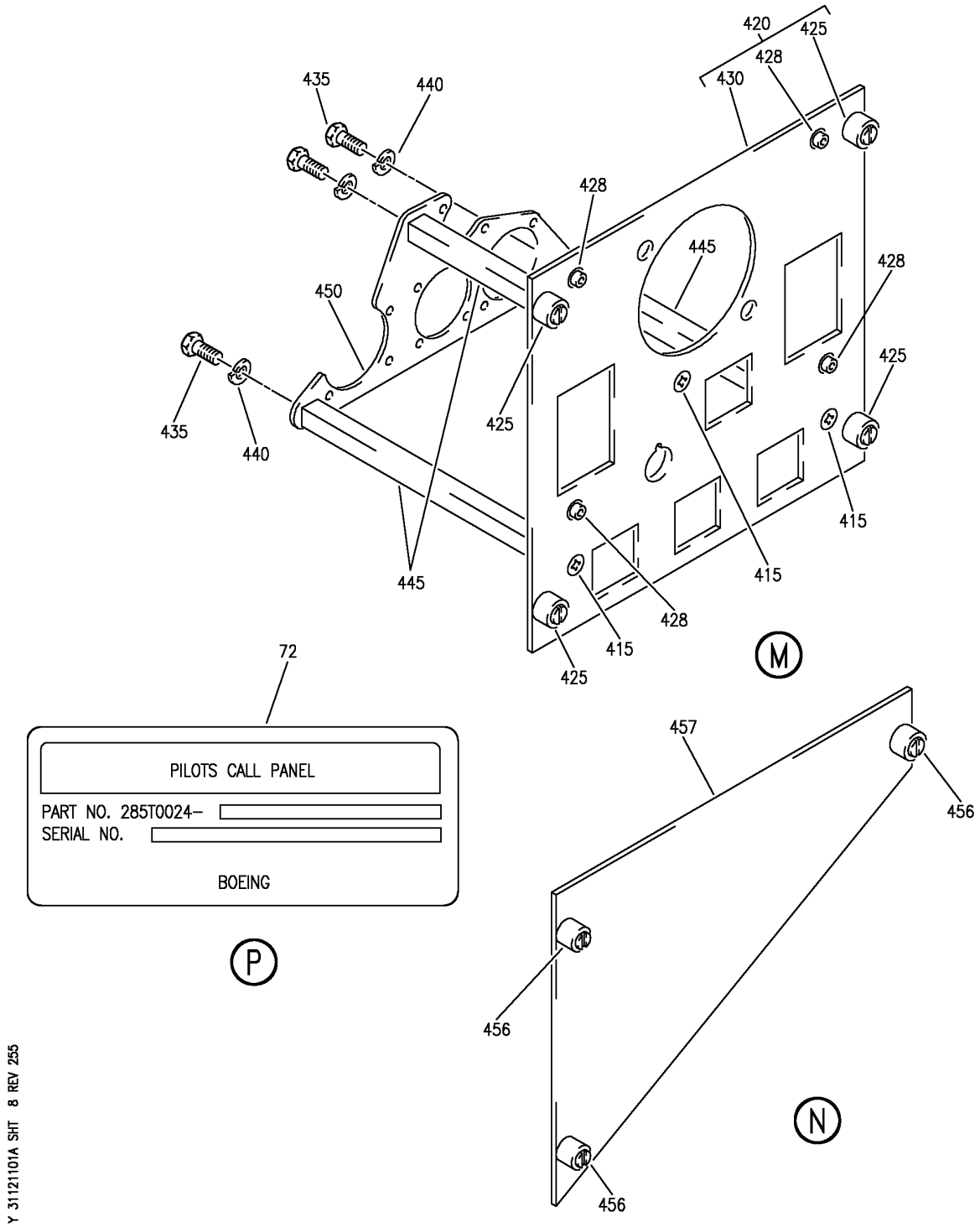

PANEL INSTL-P5 OVHD (INDICATING/RECORDING SYSTEMS ONLY)
FIGURE 1A (SHEET 8)

BOEING PROPRIETARY - Copyright © - Unpublished Work - See title page for details.

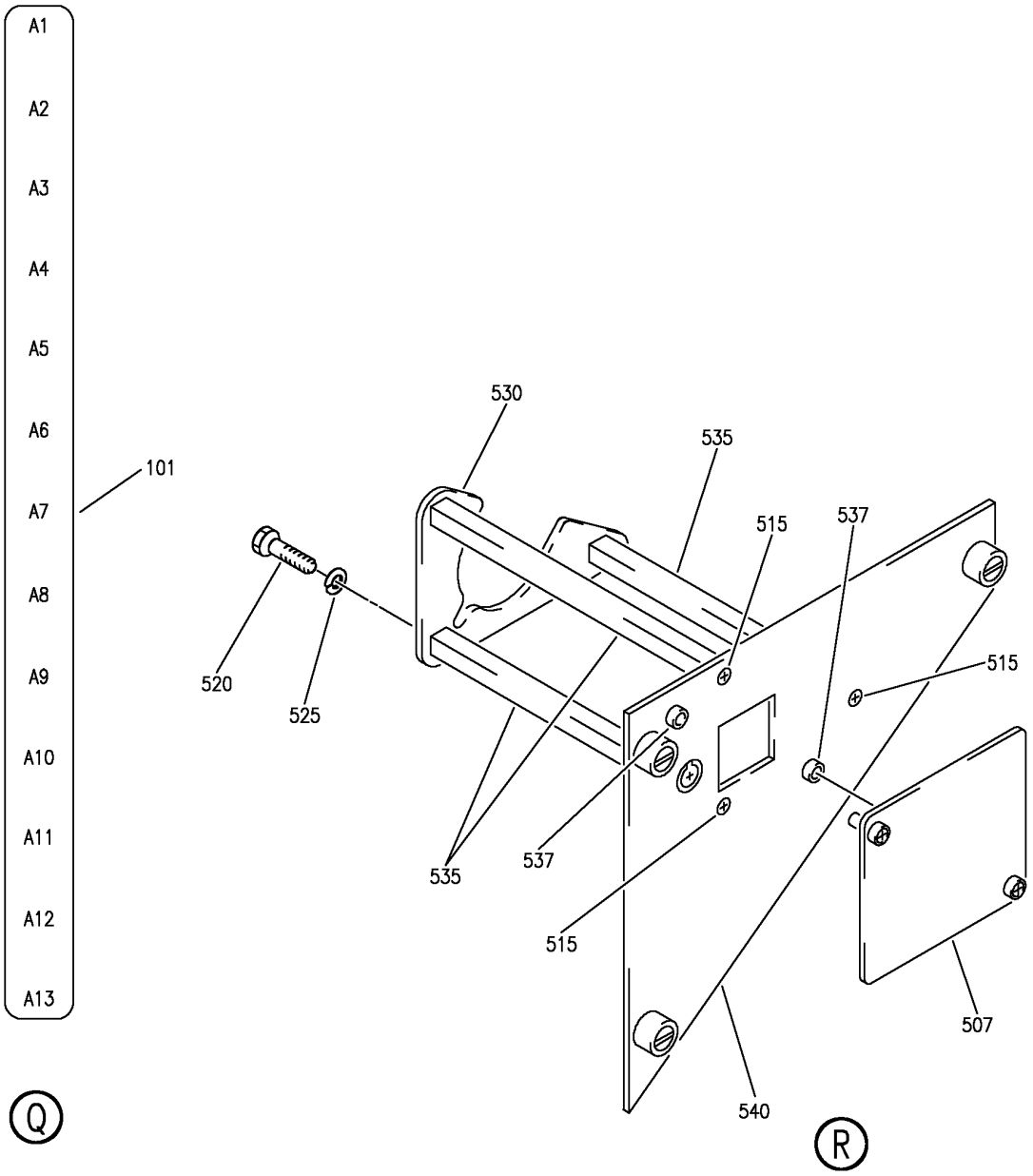

Y 31121101A SHT 9 REV 262

PANEL INSTL-P5 OVHD (INDICATING/RECORDING SYSTEMS ONLY)
FIGURE 1A (SHEET 9)

BOEING PROPRIETARY - Copyright © - Unpublished Work - See title page for details.

FIG ITEM	PART NUMBER	1 2 3 4 5 6 7 NOMENCLATURE	EFFECT FROM TO	UNITS PER ASSY
1A				
		PANEL INSTL-P5 OVHD	002004	
		(INDICATING/RECORDING	006010	
		SYSTEMS ONLY)	950999	
- 1	233N3101-1	PANEL INSTL-P5 OVHD	002004	RF
		(INDICATING/RECORDING	006010	
		SYSTEMS ONLY)	950999	
		VARIABLE DRAWING REF:		
		233N3101-5041		
		233N3101-5042		
		233N3101-5045		
		FOR NHA/OTHER SYS DET SEE:		
		25-10-00-05A		
5	BACP10U0262T	.PANEL	002004	1
			006010	
			950999	
10	233N3212-11	.PANEL ASSY-WINDOW HEAT	002004	1
		SUPPLIER CODE:	006010	
		V89954	950999	
		ELECTRICAL EQUIP NUMBER:		
		M10395		
		COMPONENT MAINT MANUAL REF:		
		30-41-71		
		QUALIFIED I/W DATA:		
		233N3212-8 -10 -11 -12		
		-13 ARE ALL		
		INTERCHANGEABLE EXCEPT		
		SUBJECT TO CUSTOMER		
		PREFERENCE		
		THE 233N3212-300 PANEL		
		ASSY IS I/W THE		
		233N3212-11 PANEL ASSY		
		I/W THE S233T100-1073		
		LIGHTPLATE		
		FOR OTHER SYS DETAILS SEE:		
		30-41-51-01		
		33-13-01-71		
15	NAS514P632-5	..SCREW	002004	3
			006010	
			950999	
20	233N3212-2	..BASEPLATE ASSY-	002004	1
		SUPPLIER CODE:	006010	
		V89954	950999	
25	PFSC35-38ASEMB	...STUD ASSY	002004	4
		SUPPLIER CODE:	006010	
		V72794	950999	
		SPECIFICATION NUMBER:		
		BACS21DX1B		

MISSING ITEM NUMBERS NOT APPLICABLE

- ITEM NOT ILLUSTRATED

BOEING PROPRIETARY - Copyright © - Unpublished Work - See title page for details.

FIG ITEM	PART NUMBER	1 2 3 4 5 6 7 NOMENCLATURE	EFFECT FROM TO	UNITS PER ASSY
1A				
30	SF6G6CBB5D	...NUT SUPPLIER CODE: V12324 SPECIFICATION NUMBER: BACN10PA06-6	002004 006010 950999	2
35	233N3212-3	...BASEPLATE- SUPPLIER CODE: V89954	002004 006010 950999	1
40	NAS1801-06-5	..SCREW	002004 006010 950999	3
45	MS35338-41	..WASHER	002004 006010 950999	3
50	69B46200-12	..STANDOFF	002004 006010 950999	3
55	233N3250-11	..BRACKET	002004 006010 950999	1
65	622-6827-002	.PANEL ASSY-HF CONT (CUSTOMER FURNISHED) SUPPLIER CODE: V4V792 ELECTRICAL EQUIP NUMBER: M00083 COMPONENT MAINT MANUAL REF: 23-10-73 FOR BREAKDOWN SEE: 23-11-02-01	002004 006010 950999	RF
65	622-5432-002	.PANEL ASSY-HF CONT (CUSTOMER FURNISHED) SUPPLIER CODE: V4V792 ELECTRICAL EQUIP NUMBER: M00083 COMPONENT MAINT MANUAL REF: 23-10-71 FOR BREAKDOWN SEE: 23-11-02-01	002004 006010 950999	RF

MISSING ITEM NUMBERS NOT APPLICABLE

— ITEM NOT ILLUSTRATED

BOEING PROPRIETARY - Copyright © - Unpublished Work - See title page for details.

FIG ITEM	PART NUMBER	1 2 3 4 5 6 7 NOMENCLATURE	EFFECT FROM TO	UNITS PER ASSY
1A				
70	285T0024-27	.MODULE ASSY-PILOT CALL PNL SUPPLIER CODE: V89954 ELECTRICAL EQUIP NUMBER: M00051 COMPONENT MAINT MANUAL REF: 23-42-59 QUALIFIED I/W DATA: 285T0024-46 MAY REPLACE 285T0024-27 EXCEPT THE "FLT INT" SWITCH AND ASSOCIATED FUNCTIONALITY WILL NO LONGER BE PRESENT.285T0024-27 WITH "FLT INT" SWITCH LABELED INOP MAY REPLACE 285T0024-46 FOR OTHER SYS DETAILS SEE: 23-42-02-02 33-13-01-71	952999	1
70	285T0024-47	.MODULE ASSY-PILOT CALL PNL SUPPLIER CODE: V89954 ELECTRICAL EQUIP NUMBER: M00051 COMPONENT MAINT MANUAL REF: 23-42-62 FOR OTHER SYS DETAILS SEE: 11-31-10-01 23-42-02-09 33-13-01-71	002004 006010	1
70	285T0024-20	.MODULE ASSY-PILOT CALL PNL SUPPLIER CODE: V89954 ELECTRICAL EQUIP NUMBER: M00051 COMPONENT MAINT MANUAL REF: 23-42-59 POST AIRLINE MOD: E.0.2393R154 VALP FOR OTHER SYS DETAILS SEE: 11-31-10-01 23-42-02-02 33-13-01-71	950951	1
72	BAC27TEX0933	..MARKER-ALUMINUM FOIL SUPPLIER CODE: V89954	002004 006010 950999	1

MISSING ITEM NUMBERS NOT APPLICABLE

— ITEM NOT ILLUSTRATED

BOEING PROPRIETARY - Copyright © - Unpublished Work - See title page for details.

FIG ITEM	PART NUMBER	1 2 3 4 5 6 7 NOMENCLATURE	EFFECT FROM TO	UNITS PER ASSY
1A				
75	NAS514P632-5	..SCREW	002004 006010 950999	2
80	NAS514P440-5	..SCREW	002004 006010 950999	2
82	285T0158-7	..PANEL- SUPPLIER CODE: V89954 ATTACHING PARTS	002004 006010 950999	1
- 85	NAS1801-06-5	..SCREW -------*-------	002004 006010 950999	4
89	285T0158-29	..COVER ASSY- SUPPLIER CODE: V89954 ATTACHING PARTS	002004 006010 950999	1
- 91	NAS514P440-5	..SCREW -------*-------	002004 006010 950999	4
93	MS35214-13	..SCREW	002004 006010 950999	3
95	NAS514P440-5	..SCREW	002004 006010 950999	3
97	92-1660-40	..NUT SUPPLIER CODE: V72962 SPECIFICATION NUMBER: BACN10DN40 OPTIONAL PART: 92-1660-440 V15653	002004 006010 950999	2
99	285T0158-25	..BRACKET ASSY- SUPPLIER CODE: V89954	002004 006010 950999	1
101	BAC27TEX1986	...DECAL- SUPPLIER CODE: V89954	002004 006010 950999	1
103	285T0158-27	..BRACKET ASSY- SUPPLIER CODE: V89954	002004 006010 950999	1

MISSING ITEM NUMBERS NOT APPLICABLE

- ITEM NOT ILLUSTRATED

BOEING PROPRIETARY - Copyright © - Unpublished Work - See title page for details.

FIG ITEM	PART NUMBER	1 2 3 4 5 6 7 NOMENCLATURE	EFFECT FROM TO	UNITS PER ASSY
1A				
105	285T0157-4	..PANEL ASSY- SUPPLIER CODE: V89954 USED ON: 285T0024-27	950999	1
105	285T0157-47	..PANEL ASSY- SUPPLIER CODE: V89954 USED ON: 285T0024-46	950999	1
120	285T0157-49	..PANEL ASSY- SUPPLIER CODE: V89954	002004 006010	1
125	PFSC35-38ASEMB	...STUD ASSY SUPPLIER CODE: V72794 SPECIFICATION NUMBER: BACS21DX1B	002004 006010 950999	4
130	SF6G6CBB5D	...NUT- SUPPLIER CODE: V12324 SPECIFICATION NUMBER: BACN10PA06-6 OPTIONAL PART: SF6G6CBB5D V12324	002004 006010 950999	2
130	SF6G6CBB5D	...NUT- SUPPLIER CODE: V12324 OPTIONAL PART: BACN10PA06-6	002004 006010	2
135	285T0157-11	...PANEL- SUPPLIER CODE: V89954 USED ON: 285T0157-4	950999	1
135	285T0157-48	...PANEL- SUPPLIER CODE: V89954 USED ON: 285T0157-47	950999	1
150	285T0157-50	...PANEL- SUPPLIER CODE: V89954	002004 006010	1
153	285T0158-21	..BLOCK-MTG SUPPLIER CODE: V89954	002004 006010 950999	4

MISSING ITEM NUMBERS NOT APPLICABLE

– ITEM NOT ILLUSTRATED

BOEING PROPRIETARY - Copyright © - Unpublished Work - See title page for details.

FIG ITEM	PART NUMBER	1 2 3 4 5 6 7 NOMENCLATURE	EFFECT FROM TO	UNITS PER ASSY
1A				
		ATTACHING PARTS		
- 156	NAS514P440-5	..SCREW	002004 006010 950999	4
		-------*-------		
159	285T0158-23	..BRACKET ASSY-	002004 006010 950999	1
		SUPPLIER CODE: V89954		
162	MF6000-06	...NUTPLATE	002004 006010 950999	6
		SUPPLIER CODE: V15653		
		SPECIFICATION NUMBER: BACN10KJ06		
		ATTACHING PARTS		
- 165	BACR15BA3AD	...RIVET-	002004 006010 950999	12
		SIZE DETERMINED ON INSTL.		
		-------*-------		
168	F22A27M22-40	...NUT-	002004 006010 950999	6
		SUPPLIER CODE: V0217B		
		ATTACHING PARTS		
- 170	BACR15BA2AD	...RIVET-	002004 006010 950999	12
		SIZE DETERMINED ON INSTL.		
		-------*-------		
172	285T0158-22	...BRACKET-	002004 006010 950999	1
		SUPPLIER CODE: V89954		
175	233T3216-10	.PANEL ASSY-PASS. SIGN CONT	002004 006010 950999	1
		SUPPLIER CODE: V89954		
		ELECTRICAL EQUIP NUMBER: M00052		
		FOR OTHER SYS DETAILS SEE: 33-13-01-71 33-24-51-01		
180	NAS514P632-5	..SCREW	002004 006010 950999	3
185	NAS1801-6-5	..SCREW	002004 006010 950999	3
190	MS35338-41	..WASHER	002004 006010 950999	3
195	69B46200-9	..STANDOFF	002004 006010 950999	3

MISSING ITEM NUMBERS NOT APPLICABLE

- ITEM NOT ILLUSTRATED

BOEING PROPRIETARY - Copyright © - Unpublished Work - See title page for details.

FIG ITEM	PART NUMBER	1 2 3 4 5 6 7 NOMENCLATURE	EFFECT FROM TO	UNITS PER ASSY
1A				
200	233T6200-85	..BRACKET-SPRT	002004 006010 950999	1
205	233T3216-2	..BASEPLATE ASSY- SUPPLIER CODE: V89954	002004 006010 950999	1
210	SF6G6CBB5D	...NUT SUPPLIER CODE: V12324 SPECIFICATION NUMBER: BACN10PA06-6	002004 006010 950999	3
215	BACS21DD1B	...STUD ASSY SUPPLIER CODE: V08524 SPECIFICATION NUMBER: BACS21DD1B	002004 006010 950999	4
220	233T3216-3	...BASEPLATE- SUPPLIER CODE: V89954	002004 006010 950999	1
230	130502-7	.PANEL ASSY-CAB. ALTITUDE CONT SUPPLIER CODE: V64547 FUNCTIONAL DESCRIPTION: SELECTOR CONTAINS CONTROLS AND CIRCUITRY NECESSARY FOR AUTOMATIC OR MANUAL PRESSURE SELECTION SPECIFICATION NUMBER: S210T160-72 ELECTRICAL EQUIP NUMBER: M00013 COMPONENT MAINT MANUAL REF: 21-31-50 FOR BREAKDOWN SEE: 21-31-01-01	002004 006010 950999	RF
230	130502-6	.PANEL ASSY-CAB. ALTITUDE CONT SUPPLIER CODE: V64547 SPECIFICATION NUMBER: S210T160-62 ELECTRICAL EQUIP NUMBER: M00013 COMPONENT MAINT MANUAL REF: 21-31-50 FOR BREAKDOWN SEE: 21-31-01-01	002004 006010 950999	RF

MISSING ITEM NUMBERS NOT APPLICABLE

– ITEM NOT ILLUSTRATED

BOEING PROPRIETARY - Copyright © - Unpublished Work - See title page for details.

FIG ITEM	PART NUMBER	1 2 3 4 5 6 7 NOMENCLATURE	EFFECT FROM TO	UNITS PER ASSY
1A				
230	130502-5	.PANEL ASSY-CAB. ALTITUDE CONT SUPPLIER CODE: V64547 SPECIFICATION NUMBER: S210T160-52 ELECTRICAL EQUIP NUMBER: M00013 COMPONENT MAINT MANUAL REF: 21-31-50 FOR BREAKDOWN SEE: 21-31-01-01	002004 006010 950999	RF
230	130502-4	.PANEL ASSY-CAB. ALTITUDE CONT SUPPLIER CODE: V64547 SPECIFICATION NUMBER: S210T160-42 ELECTRICAL EQUIP NUMBER: M00013 COMPONENT MAINT MANUAL REF: 21-31-50 FOR BREAKDOWN SEE: 21-31-01-01	002004 006010 950999	RF
235	SETL0C420M	.PANEL ASSY-CAB. PRESSURE GAGES SUPPLIER CODE: V61349 FUNCTIONAL DESCRIPTION: PROVIDES CABIN PRESSURE RATE OF CLIMB OR DESCENT CABIN TO AMBIENT DIFFERENTIAL PRESSURE AND CABIN ALTITUDE SPECIFICATION NUMBER: S231N210-14 ELECTRICAL EQUIP NUMBER: M00019 COMPONENT MAINT MANUAL REF: 21-33-07 QUALIFIED I/W DATA: INSTALLED AS A SET, PT033D T/W SETL0C420M OR SETL0C420L, I/W PT033A T/W SETL0C420H FOR BREAKDOWN SEE: 21-33-51-01	002004 006010 950999	RF

MISSING ITEM NUMBERS NOT APPLICABLE

— ITEM NOT ILLUSTRATED

BOEING PROPRIETARY - Copyright © - Unpublished Work - See title page for details.

FIG ITEM	PART NUMBER	1 2 3 4 5 6 7 NOMENCLATURE	EFFECT FROM TO	UNITS PER ASSY
1A				
240	233N3203-32	.PANEL ASSY-EQPT COOLING SUPPLIER CODE: V89954 ELECTRICAL EQUIP NUMBER: M10067 COMPONENT MAINT MANUAL REF: 21-58-71 QUALIFIED I/W DATA: 233N3203-26 -27 -32 -33 -34 ARE ALL INTERCHANGEABLE EXCEPT SUBJECT TO CUSTOMER PREFERENCE 233N3203-300 PANEL ASSY IS I/W 233N3203-32 PANEL ASSY T/W S233T100-6045 LIGHTPLATE PRE ALERT SB: 33A0044 FOR OTHER SYS DETAILS SEE: 11-31-10-01 21-33-51-01 21-58-19-11 21-58-51-01 33-13-01-71	002004 006010 950999	1
240	233N3203-1032	.PANEL ASSY-EQPT COOLING SUPPLIER CODE: V89954 ELECTRICAL EQUIP NUMBER: M10067 COMPONENT MAINT MANUAL REF: 21-58-71 POST ALERT SB: 33A0044 FOR OTHER SYS DETAILS SEE: 11-31-10-01 21-33-51-01 21-58-19-11 21-58-51-01 33-13-01-71	002004 006010 950999	1
240	233N3203-37	.PANEL ASSY-EQPT COOLING SUPPLIER CODE: V89954 ELECTRICAL EQUIP NUMBER: M10067 COMPONENT MAINT MANUAL REF: 21-58-71	002004 006010 950999	1

MISSING ITEM NUMBERS NOT APPLICABLE

— ITEM NOT ILLUSTRATED

BOEING PROPRIETARY - Copyright © - Unpublished Work - See title page for details.

FIG ITEM	PART NUMBER	1 2 3 4 5 6 7 NOMENCLATURE	EFFECT FROM TO	UNITS PER ASSY
1A				
245	NAS514P632-6	..SCREW	002004 006010 950999	3
250	233N3203-19	..BASEPLATE ASSY- SUPPLIER CODE: V89954	002004 006010 950999	1
255	PFSC35-38ASEMB	...STUD ASSY SUPPLIER CODE: V72794 SPECIFICATION NUMBER: BACS21DX1B	002004 006010 950999	4
260	SF6G6CBB5D	...NUT SUPPLIER CODE: V12324 SPECIFICATION NUMBER: BACN10PA06-6	002004 006010 950999	2
265	233N3203-21	...BASEPLATE- SUPPLIER CODE: V89954	002004 006010 950999	1
270	NAS1801-06-5	..SCREW- OPTIONAL PART: BACS12HN06-5	002004 006010 950999	3
270	BACS12HN06-5	..SCREW- OPTIONAL PART: NAS1801-06-5	002004 006010 950999	3
275	BACW10EC06S	..WASHER	002004 006010 950999	3
280	69B46200-11	..STANDOFF	002004 006010 950999	3
285	233N3250-10	..BRACKET	002004 006010 950999	1
290	BACP10U0112T	.PANEL ASSY	002004 006010 950999	1

MISSING ITEM NUMBERS NOT APPLICABLE

– ITEM NOT ILLUSTRATED

BOEING PROPRIETARY - Copyright © - Unpublished Work - See title page for details.

FIG ITEM	PART NUMBER	1 2 3 4 5 6 7 NOMENCLATURE	EFFECT FROM TO	UNITS PER ASSY
1A				
295	233N3221-61	.PANEL ASSY-LIGHTING CONT SUPPLIER CODE: V89954 POSITION DATA: R ELECTRICAL EQUIP NUMBER: M10057 COMPONENT MAINT MANUAL REF: 33-11-72 QUALIFIED I/W DATA: 233N3221-302 PANEL ASSY IS I/W 233N3221-61 PANEL ASSY T/W S233T100-6039 LIGHTPLATE AND (3) RD241-119 KNOBS AND (1) BP248-127 KNOB FOR OTHER SYS DETAILS SEE: 33-11-51-14 33-13-01-71 33-13-02-01 33-16-51-01 33-45-53-01 52-51-51-01	002004 006010 950999	1
300	NAS514P632-5	..SCREW	002004 006010 950999	3
310	233N3221-33	..BASEPLATE ASSY- SUPPLIER CODE: V89954	002004 006010 950999	1
315	BACS21DD1B	...STUD ASSY- SUPPLIER CODE: V08524 SPECIFICATION NUMBER: BACS21DD1B OPTIONAL PART: BACS21DX1B	002004 006010 950999	4
315	PFSC35-38ASEMB	...STUD ASSY- SUPPLIER CODE: V72794 SPECIFICATION NUMBER: BACS21DX1B OPTIONAL PART: BACS21DD1B	002004 006010 950999	4
320	SF6G6CBB5D	...NUT SUPPLIER CODE: V12324 SPECIFICATION NUMBER: BACN10PA06-6	002004 006010 950999	4

MISSING ITEM NUMBERS NOT APPLICABLE

— ITEM NOT ILLUSTRATED

BOEING PROPRIETARY - Copyright © - Unpublished Work - See title page for details.

FIG ITEM	PART NUMBER	1 2 3 4 5 6 7 NOMENCLATURE	EFFECT FROM TO	UNITS PER ASSY
1A				
325	233N3221-37	...BASEPLATE- SUPPLIER CODE: V89954	002004 006010 950999	1
330	BACS12HN06-5	..SCREW	002004 006010 950999	3
335	BACW10EC06S	..WASHER	002004 006010 950999	3
340	69B46200-10	..STANDOFF	002004 006010 950999	3
342	65B40112-12	..SPACER- OPTIONAL PART: 233N3221-42 V89954	002004 006010 950999	1
342	233N3221-42	..SPACER- SUPPLIER CODE: V89954 OPTIONAL PART: 65B40112-12	002004 006010 950999	1
345	233N3250-48	..BRACKET	002004 006010 950999	1
350	BACP10U0300T	.PANEL ASSY	002004 006010 950999	1
355	2263-01-1	.INDICATOR ASSY-COMPT TEMP SUPPLIER CODE: V52013 FUNCTIONAL DESCRIPTION: INDICATOR SHOWS COMPARTMENT TEMPERATURE FOR EA OF THE THREE CABIN ZONES SPECIFICATION NUMBER: S231N211-3 COMPONENT MAINT MANUAL REF: 21-61-02 FOR BREAKDOWN SEE: 21-65-51-01	002004 006010 950999	RF

MISSING ITEM NUMBERS NOT APPLICABLE

– ITEM NOT ILLUSTRATED

BOEING PROPRIETARY - Copyright © - Unpublished Work - See title page for details.

FIG ITEM	PART NUMBER	1 2 3 4 5 6 7 NOMENCLATURE	EFFECT FROM TO	UNITS PER ASSY
1A				
355	20-210-01	.INDICATOR ASSY-COMPT TEMP SUPPLIER CODE: V35012 SPECIFICATION NUMBER: S231N211-2 COMPONENT MAINT MANUAL REF: 21-65-01 FOR BREAKDOWN SEE: 21-65-51-01	002004 006010 950999	RF
360	233N3217-15	.PANEL ASSY-AIR CONDITIONING CONT SUPPLIER CODE: V89954 ELECTRICAL EQUIP NUMBER: M10193 COMPONENT MAINT MANUAL REF: 21-51-71 QUALIFIED I/W DATA: 233N3217-8 -11 -15 -16 -17 ARE ALL INTERCHANGEABLE EXCEPT SUBJECT TO CUSTOMER PREFERENCE THE 233N3217-300 PANEL ASSY IS I/W THE 233N317-15 PANEL ASSY T/W THE S233T100-6014 LIGHTPLATE AND (2) BP248-127 KNOBS AND (3) BP260-113 KNOBS FOR OTHER SYS DETAILS SEE: 21-25-55-01 21-51-54-01 21-61-04-01 33-13-01-71	002004 006010 950999	1
365	NAS514P632-5	..SCREW	002004 006010 950999	3
370	233N3217-2	..BASEPLATE ASSY- SUPPLIER CODE: V89954 OPTIONAL PART: 233N3217-9 V89954	002004 006010 950999	1

MISSING ITEM NUMBERS NOT APPLICABLE

– ITEM NOT ILLUSTRATED

BOEING PROPRIETARY - Copyright © - Unpublished Work - See title page for details.

FIG ITEM	PART NUMBER	1 2 3 4 5 6 7 NOMENCLATURE	EFFECT FROM TO	UNITS PER ASSY
1A				
370	233N3217-9	..BASEPLATE ASSY- SUPPLIER CODE: V89954 OPTIONAL PART: 233N3217-2 V89954	002004 006010 950999	1
375	PFSC35-38ASEMB	...STUD ASSY SUPPLIER CODE: V72794 SPECIFICATION NUMBER: BACS21DX1B	002004 006010 950999	6
380	SF6G6CBB5D	...NUT SUPPLIER CODE: V12324 SPECIFICATION NUMBER: BACN10PA06-6	002004 006010 950999	5
385	233N3217-3	...BASEPLATE- SUPPLIER CODE: V89954 USED ON: 233N3217-2	002004 006010 950999	1
385	233N3217-10	...BASEPLATE- SUPPLIER CODE: V89954 USED ON: 233N3217-9	002004 006010 950999	1
390	NAS1801-06-5	..SCREW- OPTIONAL PART: BACS12HN06-5	002004 006010 950999	3
390	BACS12HN06-5	..SCREW- OPTIONAL PART: NAS1801-06-5	002004 006010 950999	3
395	BACW10EC06S	..WASHER	002004 006010 950999	3
400	69B46200-14	..STANDOFF	002004 006010 950999	3
405	233N3250-13	..BRACKET	002004 006010 950999	1

MISSING ITEM NUMBERS NOT APPLICABLE

– ITEM NOT ILLUSTRATED

BOEING PROPRIETARY - Copyright © - Unpublished Work - See title page for details.

FIG ITEM	PART NUMBER	1 2 3 4 5 6 7 NOMENCLATURE	EFFECT FROM TO	UNITS PER ASSY
1A				
410	233N3215-16	.PANEL ASSY-BLEED AIR SUPPLIER CODE: V89954 MISCELLANEOUS DATA: FOR SPARES PROCURE NEXT HIGHER ASSY ELECTRICAL EQUIP NUMBER: M10259 COMPONENT MAINT MANUAL REF: 36-11-71 QUALIFIED I/W DATA: 233N3215-13 -14 -16 -17 ARE ALL INTERCHANGEABLE EXCEPT SUBJECT TO CUSTOMER PREFERENCE THE 233N3215-300 PANEL ASSY IS I/W THE 233N3215-16 PANEL ASSY T/W THE S233T100-6009 LIGHTPLATE PRE ALERT SB: 33A0044 FOR OTHER SYS DETAILS SEE: 26-18-51-02 33-13-01-71 36-11-04-02 36-21-00-02 36-21-02-03 36-22-51-01 49-52-00-02 75-32-00-02	002004 006010 950999	1
410	233N3215-1016	.PANEL ASSY-BLEED AIR SUPPLIER CODE: V89954 ELECTRICAL EQUIP NUMBER: M10259 COMPONENT MAINT MANUAL REF: 36-11-71 POST ALERT SB: 33A0044 FOR OTHER SYS DETAILS SEE: 26-18-51-02 33-13-01-71 36-11-04-02 36-21-00-02 36-21-02-03 36-22-51-01 49-52-00-02 75-32-00-02	002004 006010 950999	1

MISSING ITEM NUMBERS NOT APPLICABLE

— ITEM NOT ILLUSTRATED

BOEING PROPRIETARY - Copyright © - Unpublished Work - See title page for details.

FIG ITEM	PART NUMBER	1 2 3 4 5 6 7 NOMENCLATURE	EFFECT FROM TO	UNITS PER ASSY
1A				
410	233N3215-22	.PANEL ASSY-BLEED AIR SUPPLIER CODE: V89954 ELECTRICAL EQUIP NUMBER: M10259 COMPONENT MAINT MANUAL REF: 36-11-71 FOR OTHER SYS DETAILS SEE: 26-18-51-02 33-13-01-71 36-11-04-02 36-21-00-02 36-21-02-03 36-22-51-01 49-52-00-02 75-32-00-02	002004 006010 950999	1
415	NAS514P632-5	..SCREW	002004 006010 950999	3
420	233N3215-10	..BASEPLATE ASSY- SUPPLIER CODE: V89954	002004 006010 950999	1
425	PFSC35-38ASEMB	...STUD ASSY SUPPLIER CODE: V72794 SPECIFICATION NUMBER: BACS21DX1B	002004 006010 950999	4
428	SF6G6CBB5D	...NUT SUPPLIER CODE: V12324 SPECIFICATION NUMBER: BACN10PA06-6	002004 006010 950999	4
430	233N3215-11	...BASEPLATE- SUPPLIER CODE: V89954	002004 006010 950999	1
435	NAS1801-06-5	..SCREW	002004 006010 950999	3
440	MS35338-41	..WASHER	002004 006010 950999	3
445	69B46200-11	..STANDOFF	002004 006010 950999	3
450	233N3250-39	..BRACKET-SPRT	002004 006010 950999	1

MISSING ITEM NUMBERS NOT APPLICABLE

— ITEM NOT ILLUSTRATED

BOEING PROPRIETARY - Copyright © - Unpublished Work - See title page for details.

FIG ITEM	PART NUMBER	1 2 3 4 5 6 7 NOMENCLATURE	EFFECT FROM TO	UNITS PER ASSY
1A				
455	233T3200-1	.PANEL ASSY-	002004 006010 950999	1
456	BACS21DD1B	..STUD ASSY SUPPLIER CODE: V08524 SPECIFICATION NUMBER: BACS21DD1B	002004 006010 950999	3
457	233T3200-3	..BASEPLATE	002004 006010 950999	1

MISSING ITEM NUMBERS NOT APPLICABLE

– ITEM NOT ILLUSTRATED

BOEING PROPRIETARY - Copyright © - Unpublished Work - See title page for details.

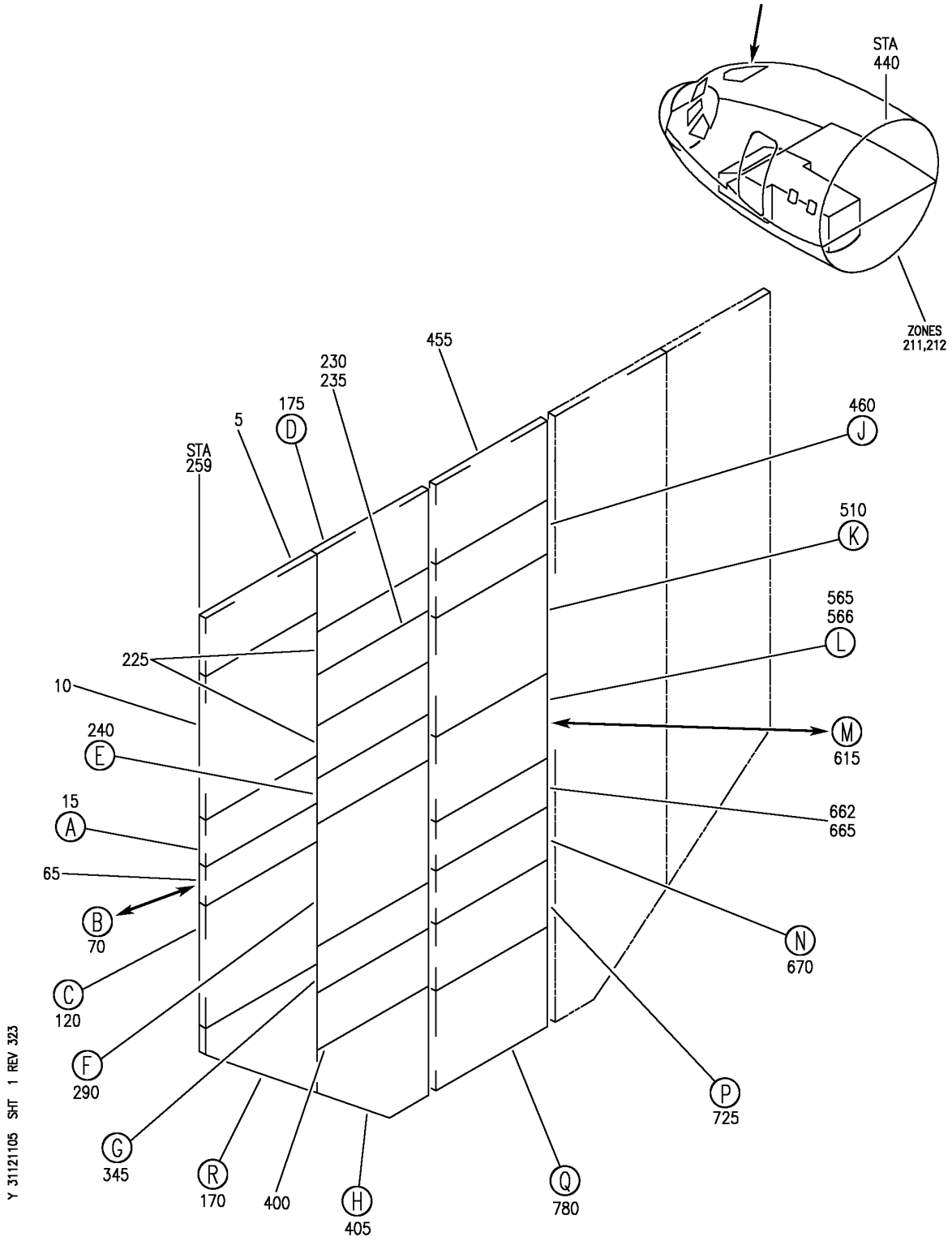

PANEL INSTL-P5 OVHD (INDICATING/RECORDING SYSTEMS ONLY)
FIGURE 5 (SHEET 1)

BOEING PROPRIETARY - Copyright © - Unpublished Work - See title page for details.

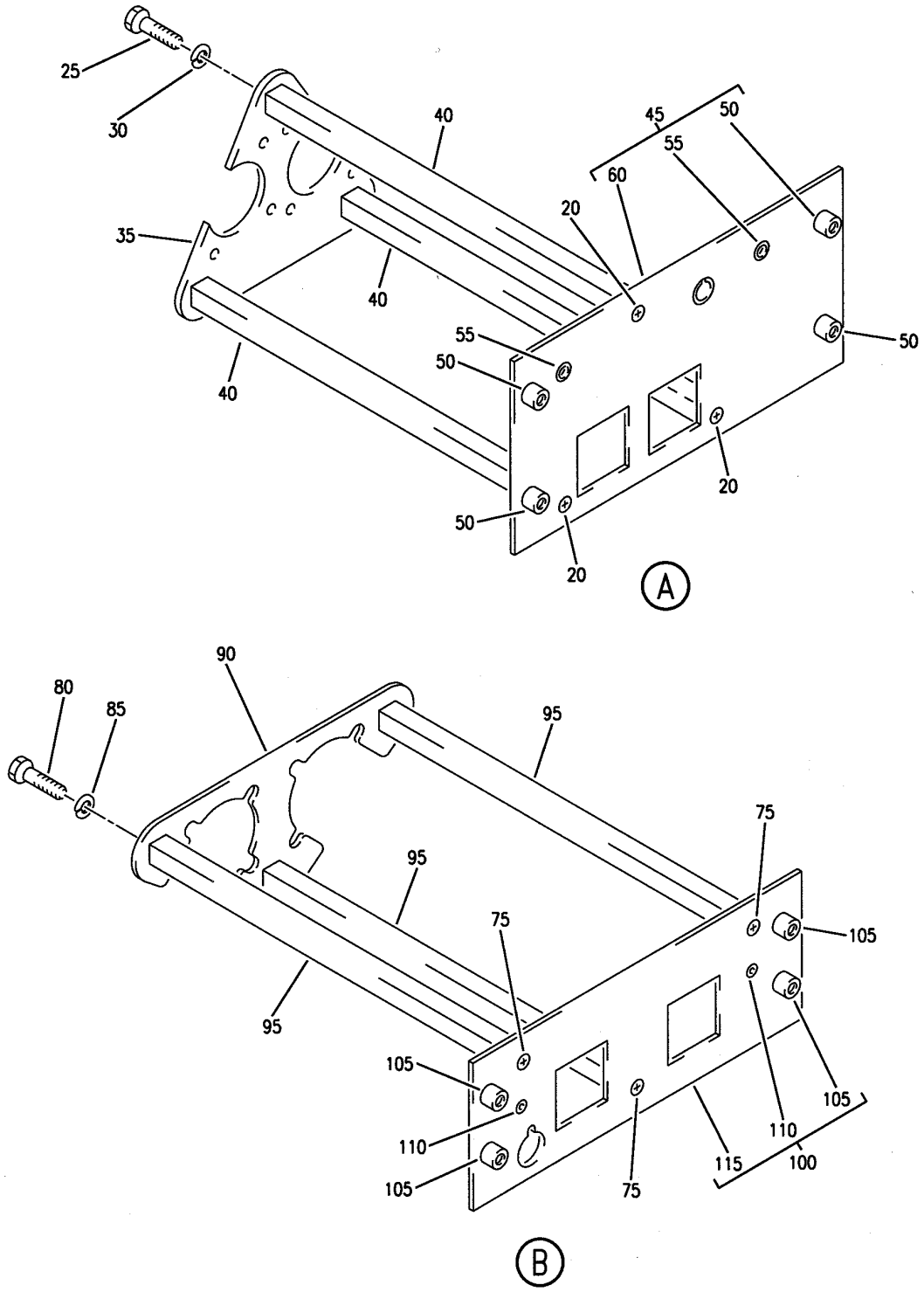

PANEL INSTL-P5 OVHD (INDICATING/RECORDING SYSTEMS ONLY)
FIGURE 5 (SHEET 2)

BOEING PROPRIETARY - Copyright © - Unpublished Work - See title page for details.

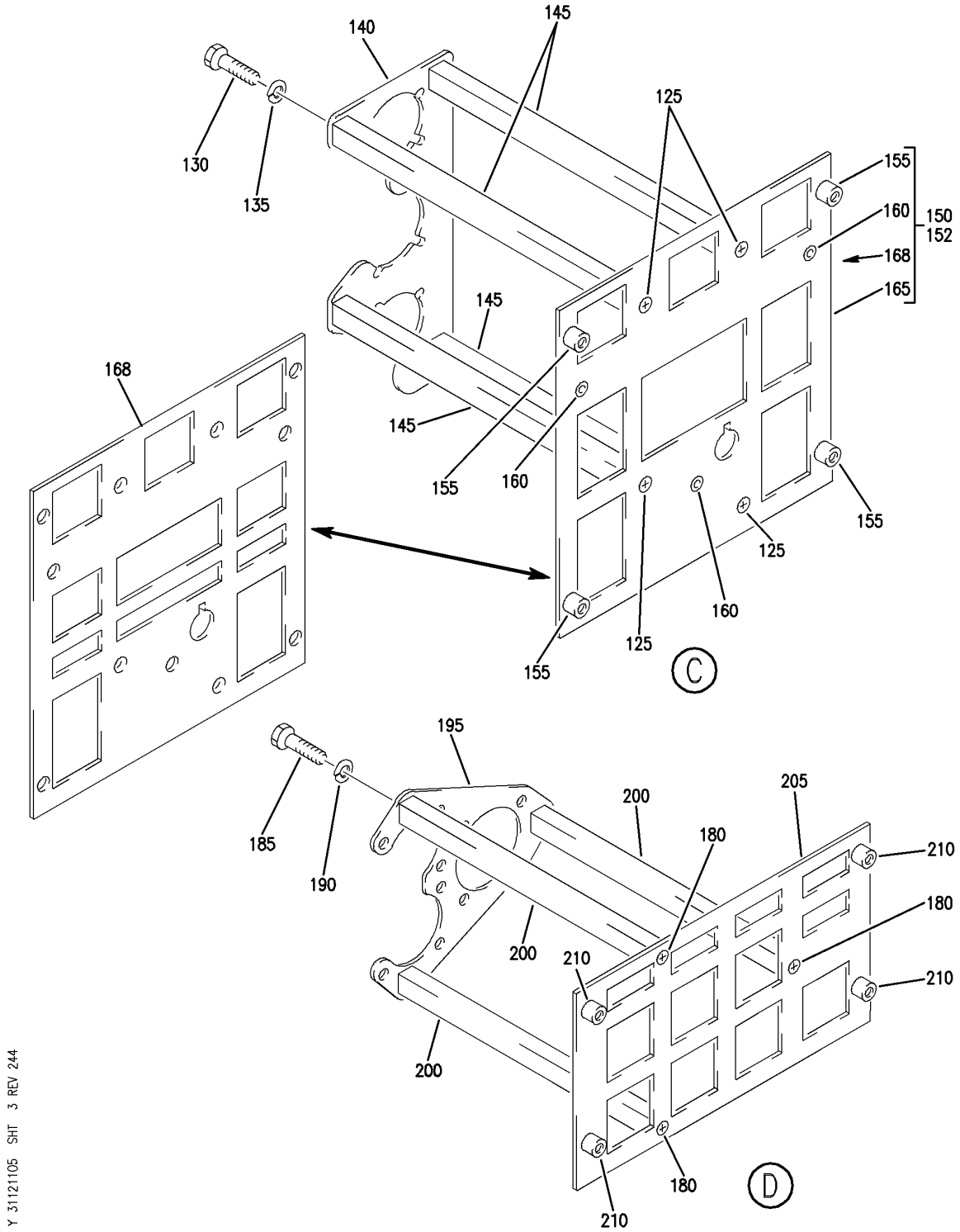

PANEL INSTL-P5 OVHD (INDICATING/RECORDING SYSTEMS ONLY)
FIGURE 5 (SHEET 3)

BOEING PROPRIETARY - Copyright © - Unpublished Work - See title page for details.

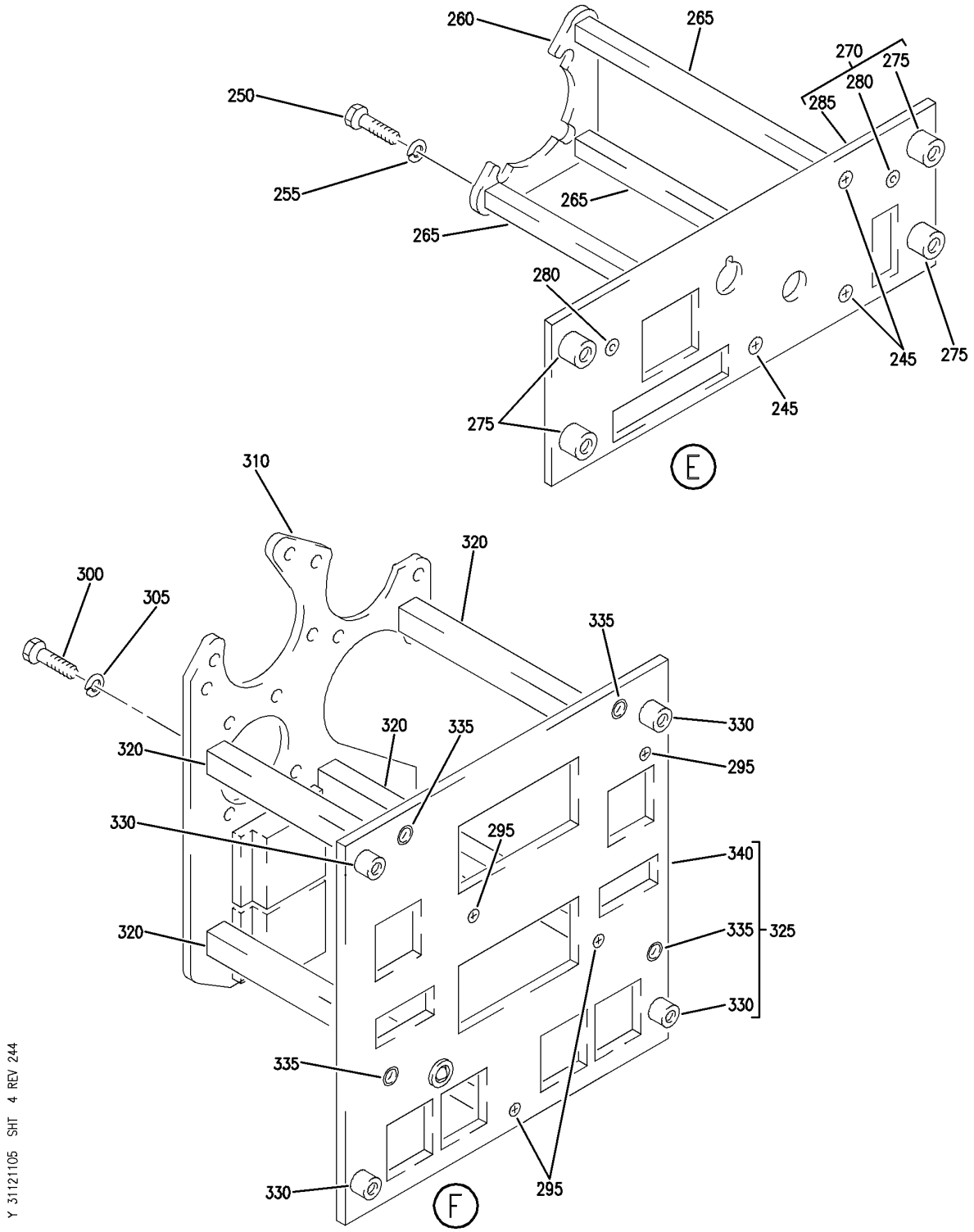

PANEL INSTL-P5 OVHD (INDICATING/RECORDING SYSTEMS ONLY)
FIGURE 5 (SHEET 4)

BOEING PROPRIETARY - Copyright © - Unpublished Work - See title page for details.

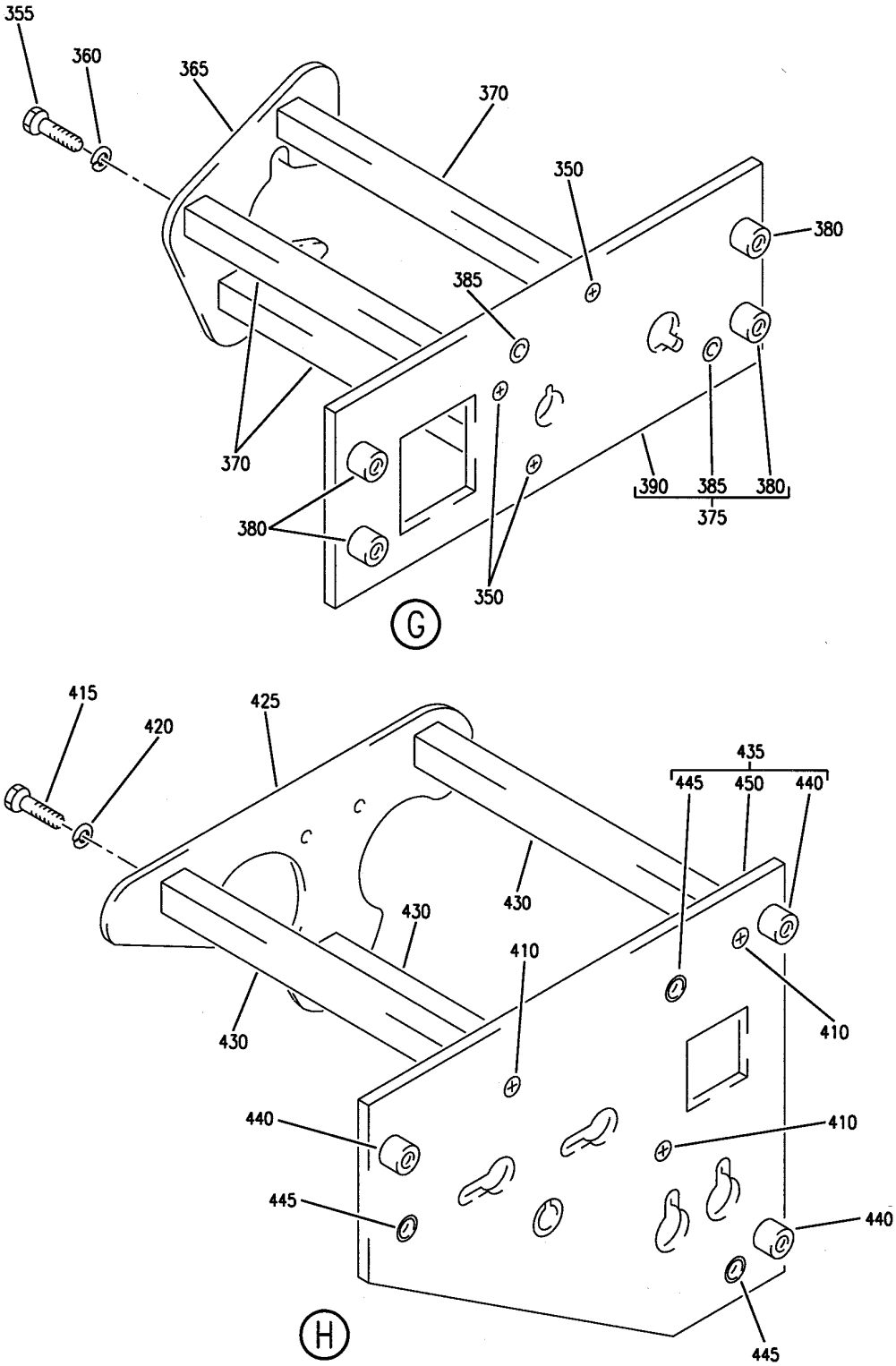

Y 31121105 SHT 5 REV 214

PANEL INSTL-P5 OVHD (INDICATING/RECORDING SYSTEMS ONLY)
FIGURE 5 (SHEET 5)

BOEING PROPRIETARY - Copyright © - Unpublished Work - See title page for details.

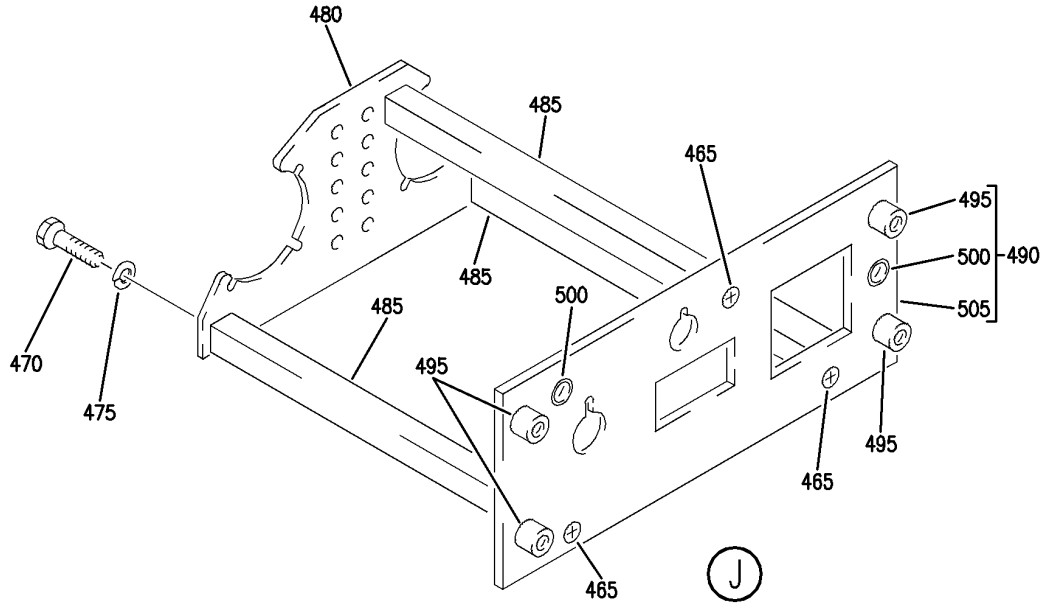

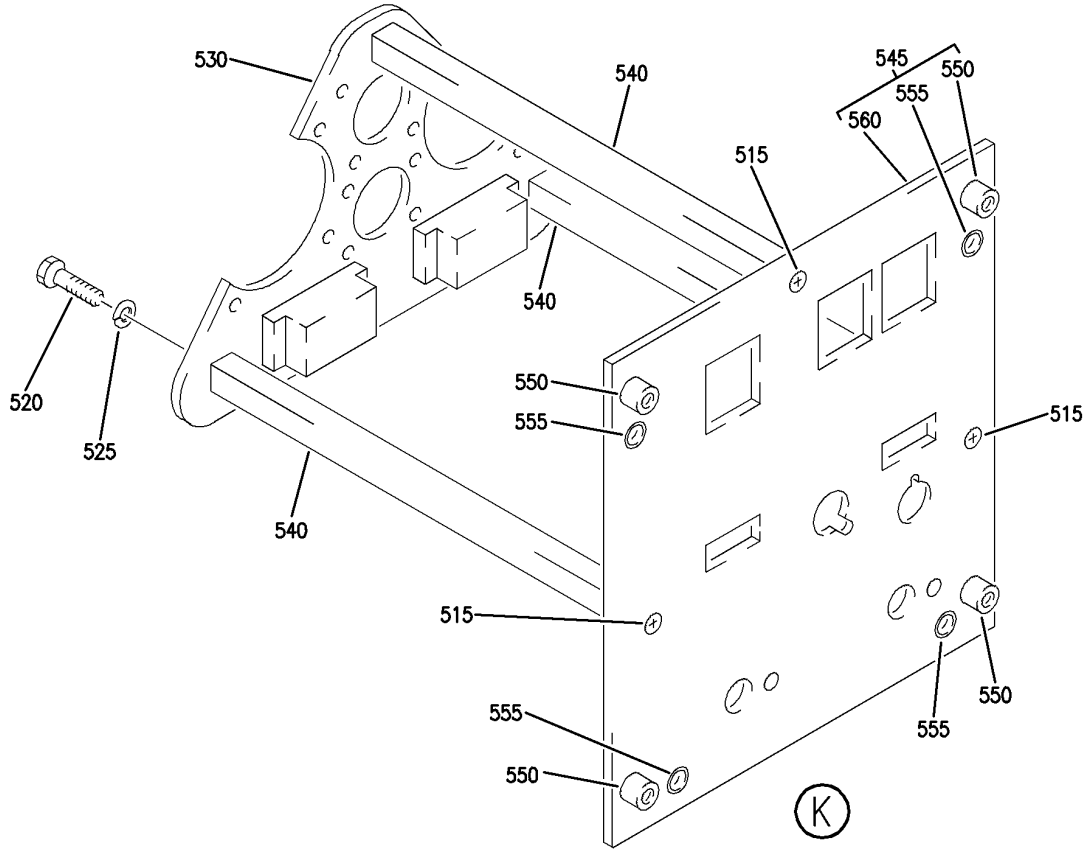

Y 31121105 SHT 6 REV 244

PANEL INSTL-P5 OVHD (INDICATING/RECORDING SYSTEMS ONLY)
FIGURE 5 (SHEET 6)

BOEING PROPRIETARY - Copyright © - Unpublished Work - See title page for details.

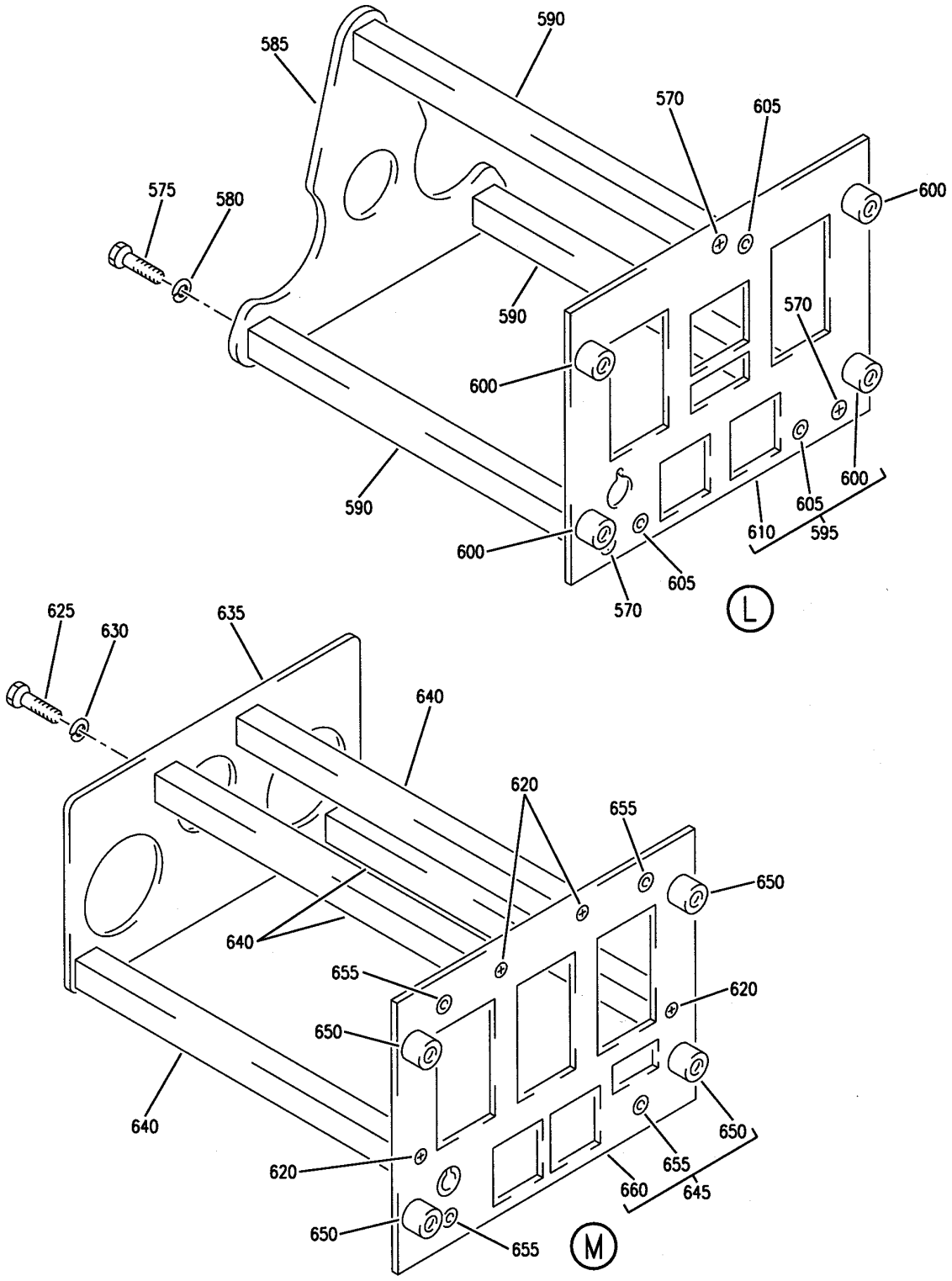

PANEL INSTL-P5 OVHD (INDICATING/RECORDING SYSTEMS ONLY)
FIGURE 5 (SHEET 7)

BOEING PROPRIETARY - Copyright © - Unpublished Work - See title page for details.

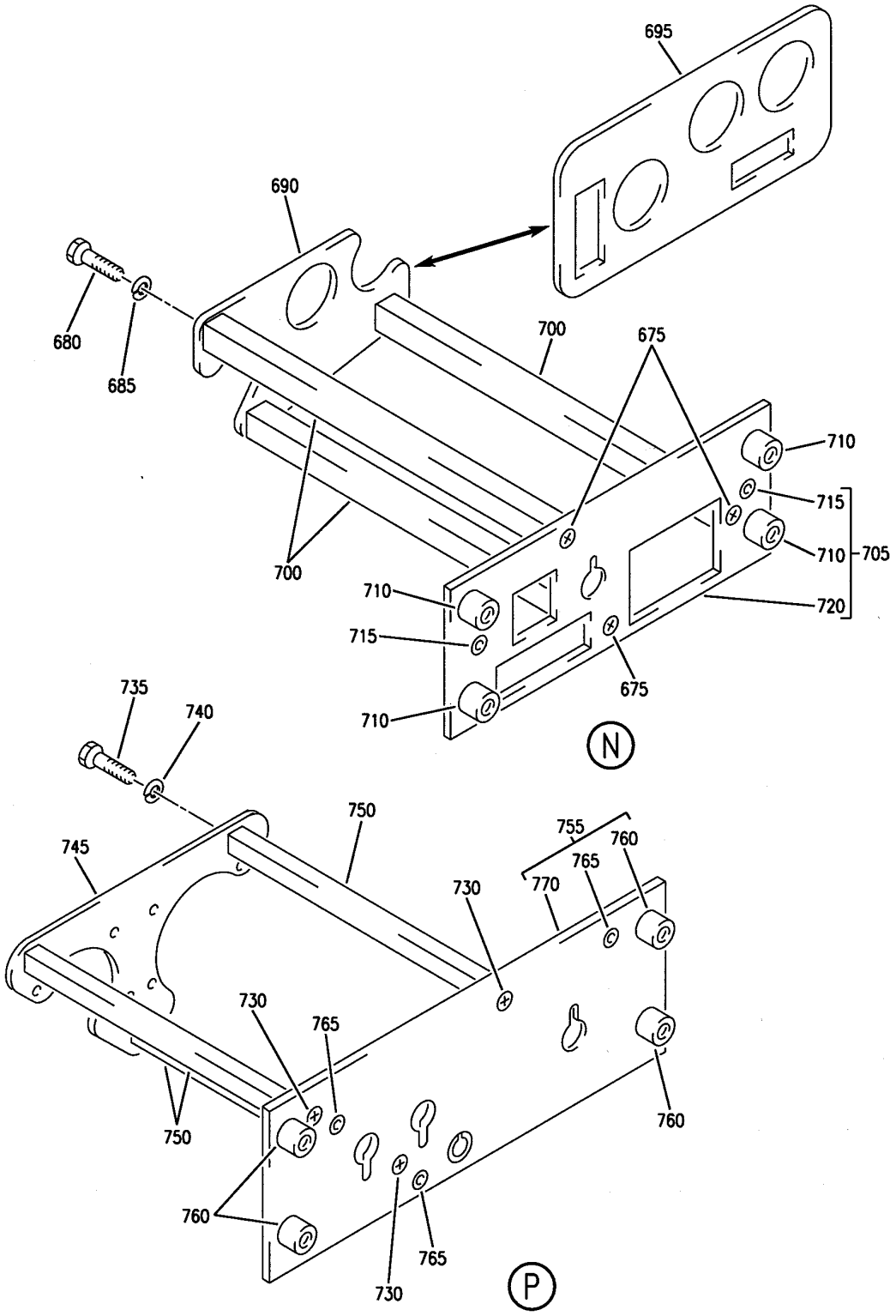

PANEL INSTL-P5 OVHD (INDICATING/RECORDING SYSTEMS ONLY)
FIGURE 5 (SHEET 8)

BOEING PROPRIETARY - Copyright © - Unpublished Work - See title page for details.

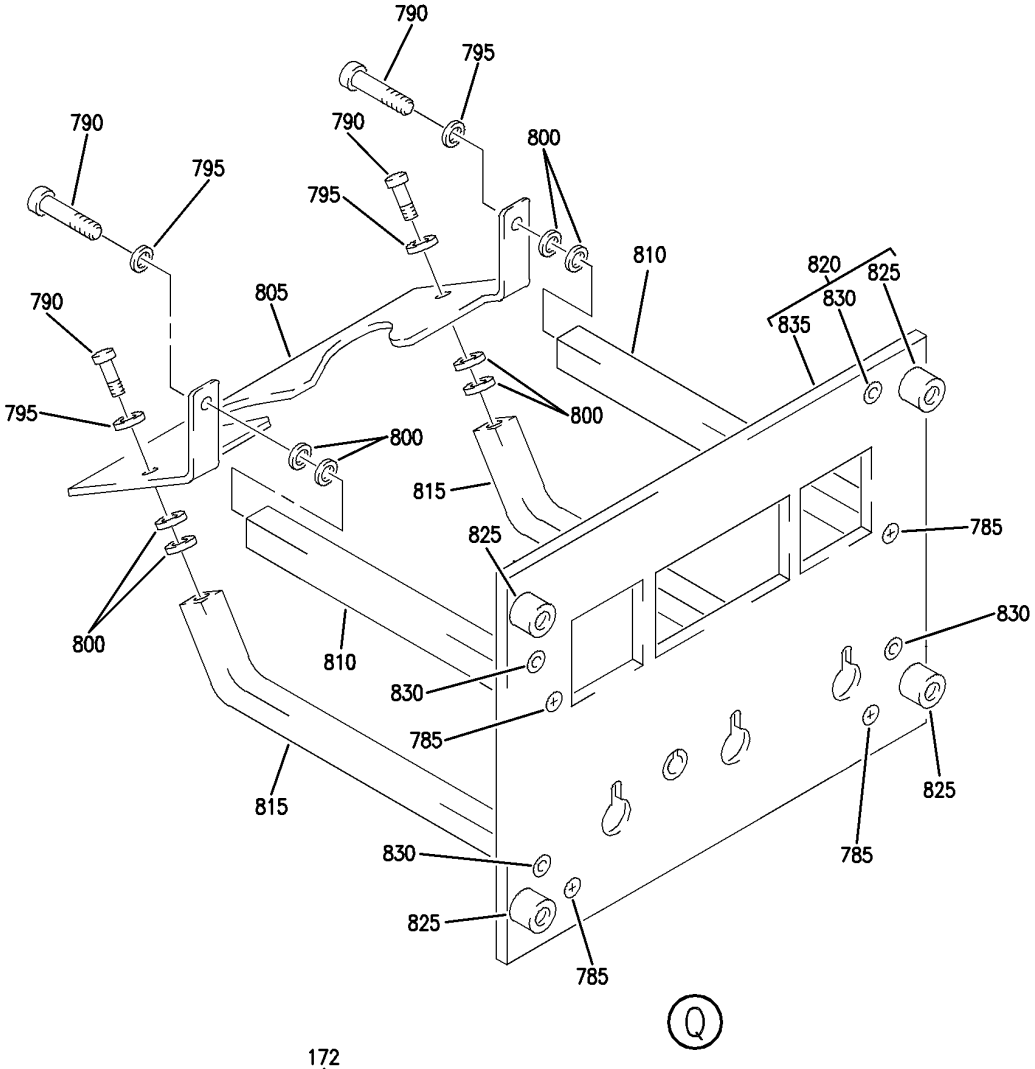

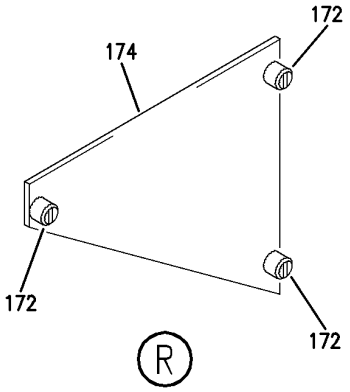

Y 31121105 SHT 9 REV 244

PANEL INSTL-P5 OVHD (INDICATING/RECORDING SYSTEMS ONLY)
FIGURE 5 (SHEET 9)

BOEING PROPRIETARY - Copyright © - Unpublished Work - See title page for details.

FIG ITEM	PART NUMBER	1 2 3 4 5 6 7 NOMENCLATURE	EFFECT FROM TO	UNITS PER ASSY
5				
		PANEL INSTL-P5 OVHD (INDICATING/RECORDING SYSTEMS ONLY)	107107	
- 1	233N3101-1	PANEL INSTL-P5 OVHD (INDICATING/RECORDING SYSTEMS ONLY)	107107	RF
		VARIABLE DRAWING REF: 233N3101-5005		
		FOR NHA/OTHER SYS DET SEE: 25-10-00-05A		
5	BACP10U0262T	.PANEL-	107107	1
10	CG1093AD01	.PANEL ASSY-IRS MODE SELECT	107107	RF
		SUPPLIER CODE: V94580		
		SPECIFICATION NUMBER: S242T101-203		
		ELECTRICAL EQUIP NUMBER: M00059		
		COMPONENT MAINT MANUAL REF: 34-21-21		
		QUALIFIED I/W DATA: CG1093AD01 I/W CG1093AC01 EXCEPT CG1093AD01 DISPLAYS IRU MAINTENANCE CODES AND THE TIME REMAINING IN ALIGNMENT CG1093AD01 I/W CG1093AD02 EXCEPT CG1093AD01 DISPLAYS IRU MAINTENANCE CODES AND THE TIME REMAINING IN ALIGNMENT		
		OPTIONAL PART: CG1093AC01 V94580		
		FOR BREAKDOWN SEE: 34-21-02-01		

MISSING ITEM NUMBERS NOT APPLICABLE

- ITEM NOT ILLUSTRATED

BOEING PROPRIETARY - Copyright © - Unpublished Work - See title page for details.

FIG ITEM	PART NUMBER	1 2 3 4 5 6 7 NOMENCLATURE	EFFECT FROM TO	UNITS PER ASSY
5				
10	CG1093AC01	.PANEL ASSY-IRS MODE SELECT SUPPLIER CODE: V94580 SPECIFICATION NUMBER: S242T101-202 ELECTRICAL EQUIP NUMBER: M00059 COMPONENT MAINT MANUAL REF: 34-21-08 QUALIFIED I/W DATA: CG1093AD01 I/W CG1093AC01 EXCEPT CG1093AD01 DISPLAYS IRU MAINTENANCE CODES AND THE TIME REMAINING IN ALIGNMENT OPTIONAL PART: CG1093AD01 V94580 FOR BREAKDOWN SEE: 34-21-02-01	107107	RF
10	CG1093AD02	.PANEL ASSY-IRS MODE SELECT SUPPLIER CODE: V94580 SPECIFICATION NUMBER: S242T101-204 ELECTRICAL EQUIP NUMBER: M00059 COMPONENT MAINT MANUAL REF: 34-21-21 QUALIFIED I/W DATA: CG1093AD01 I/W CG1093AD02 EXCEPT CG1093AD01 DISPLAYS IRU MAINTENANCE CODES AND THE TIME REMAINING IN ALIGNMENT FOR BREAKDOWN SEE: 34-21-02-01	107107	RF

MISSING ITEM NUMBERS NOT APPLICABLE

– ITEM NOT ILLUSTRATED

BOEING PROPRIETARY - Copyright © - Unpublished Work - See title page for details.

FIG ITEM	PART NUMBER	1 2 3 4 5 6 7 NOMENCLATURE	EFFECT FROM TO	UNITS PER ASSY
5				
15	233N3216-18	.PANEL ASSY-YAW DAMPER SUPPLIER CODE: V89954 ELECTRICAL EQUIP NUMBER: M10250 COMPONENT MAINT MANUAL REF: 22-21-71 QUALIFIED I/W DATA: 233N3216-14, -18, -20, -21, -22 ARE ALL INTERCHANGEABLE EXCEPT SUBJECT TO CUSTOMER PREFERENCE PRE ALERT SB: 33A0044R1 FOR OTHER SYS DETAILS SEE: 22-21-01-01 33-13-01-70	107107	1
15	233N3216-1018	.PANEL ASSY-YAW DAMPER SUPPLIER CODE: V89954 ELECTRICAL EQUIP NUMBER: M10250 COMPONENT MAINT MANUAL REF: 22-21-71 POST ALERT SB: 33A0044R1 FOR OTHER SYS DETAILS SEE: 22-21-01-01 33-13-01-70	107107	1
20	NAS514P632-5	..SCREW	107107	3
25	BACS12CB06-5	..SCREW	107107	3
30	MS35338-41	..WASHER	107107	3
35	233N3250-15	..BRACKET-CONN.	107107	1
40	69B46200-12	..STANDOFF	107107	3
45	233N3216-2	..BASEPLATE ASSY- SUPPLIER CODE: V89954	107107	1
50	PFSC35-38ASEMB	...STUD ASSY- SUPPLIER CODE: V72794 SPECIFICATION NUMBER: BACS21DX1B	107107	4
55	SF6G6CBB5D	...NUT SUPPLIER CODE: V12324 SPECIFICATION NUMBER: BACN10PA06-6	107107	2

MISSING ITEM NUMBERS NOT APPLICABLE

– ITEM NOT ILLUSTRATED

BOEING PROPRIETARY - Copyright © - Unpublished Work - See title page for details.

FIG ITEM	PART NUMBER	1 2 3 4 5 6 7 NOMENCLATURE	EFFECT FROM TO	UNITS PER ASSY
5				
60	233N3216-3	...BASEPLATE- SUPPLIER CODE: V89954	107107	1
70	233T3242-6	.PANEL ASSY-EEC CONT SUPPLIER CODE: V89954 ELECTRICAL EQUIP NUMBER: M10761 COMPONENT MAINT MANUAL REF: 73-21-86 QUALIFIED I/W DATA: 233T3242-301 PANEL ASSY IS I/W 233T3242-6 PANEL ASSY T/W S233T100-1092 LIGHTPLATE POST SERVICE BULLETIN: 73-0018 PRE ALERT SB: 33A0044 FOR OTHER SYS DETAILS SEE: 33-13-01-70 73-21-52-01	107107	1
70	233T3242-1006	.PANEL ASSY-EEC CONT SUPPLIER CODE: V89954 ELECTRICAL EQUIP NUMBER: M10761 COMPONENT MAINT MANUAL REF: 73-21-86 POST ALERT SB: 33A0044 FOR OTHER SYS DETAILS SEE: 33-13-01-70 73-21-52-01	107107	1
120	233N3205-19	.PANEL ASSY-HYDR SUPPLIER CODE: V89954 ELECTRICAL EQUIP NUMBER: M10050 COMPONENT MAINT MANUAL REF: 29-00-71 FOR OTHER SYS DETAILS SEE: 29-11-52-01 29-11-02-07 29-11-05-06 29-31-00-03 29-32-51-01 29-33-52-01 33-13-01-70	107107	1

MISSING ITEM NUMBERS NOT APPLICABLE

– ITEM NOT ILLUSTRATED

BOEING PROPRIETARY - Copyright © - Unpublished Work - See title page for details.

FIG ITEM	PART NUMBER	1 2 3 4 5 6 7 NOMENCLATURE	EFFECT FROM TO	UNITS PER ASSY
5				
120	233N3205-21	.PANEL ASSY-HYDR SUPPLIER CODE: V89954 ELECTRICAL EQUIP NUMBER: M10050 COMPONENT MAINT MANUAL REF: 29-00-71 FOR OTHER SYS DETAILS SEE: 29-11-52-01 29-11-02-07 29-11-05-06 29-31-00-03 29-32-51-01 29-33-52-01 33-13-01-70	107107	1
120	233N3205-24	.PANEL ASSY-HYDR SUPPLIER CODE: V89954 ELECTRICAL EQUIP NUMBER: M10050 COMPONENT MAINT MANUAL REF: 29-00-71 FOR OTHER SYS DETAILS SEE: 29-11-52-01 29-11-02-07 29-11-05-06 29-31-00-03 29-32-51-01 29-33-52-01 33-13-01-70	107107	1

MISSING ITEM NUMBERS NOT APPLICABLE

– ITEM NOT ILLUSTRATED

BOEING PROPRIETARY - Copyright © - Unpublished Work - See title page for details.

FIG ITEM	PART NUMBER	1 2 3 4 5 6 7 NOMENCLATURE	EFFECT FROM TO	UNITS PER ASSY
5				
120	233N3205-27	.PANEL ASSY-HYDR SUPPLIER CODE: V89954 ELECTRICAL EQUIP NUMBER: M10050 COMPONENT MAINT MANUAL REF: 29-00-71 QUALIFIED I/W DATA: 233N3205-302 PANEL ASSY IS I/W 233N3205-27 PANEL ASSY T/W S233T100-6060 LIGHTPLATE FOR OTHER SYS DETAILS SEE: 29-11-02-07 29-11-05-06 29-11-52-01 29-31-00-03 29-32-51-01 29-33-52-01 33-13-01-70	107107	1
120	233N3205-25	.PANEL ASSY-HYDR SUPPLIER CODE: V89954 ELECTRICAL EQUIP NUMBER: M10050 COMPONENT MAINT MANUAL REF: 29-00-71 QUALIFIED I/W DATA: 233N3205-301 PANEL ASSY IS I/W 233N3205-25 PANEL ASSY T/W S233T100-6044 LIGHTPLATE FOR OTHER SYS DETAILS SEE: 29-11-02-07 29-11-05-06 29-11-52-01 29-31-00-03 29-32-51-01 29-33-52-01 33-13-01-70	107107	1

MISSING ITEM NUMBERS NOT APPLICABLE

– ITEM NOT ILLUSTRATED

BOEING PROPRIETARY - Copyright © - Unpublished Work - See title page for details.

FIG ITEM	PART NUMBER	1 2 3 4 5 6 7 NOMENCLATURE	EFFECT FROM TO	UNITS PER ASSY
5				
120	233N3205-26	.PANEL ASSY-HYDR	107107	1
		SUPPLIER CODE:		
		V89954		
		ELECTRICAL EQUIP NUMBER:		
		M10050		
		COMPONENT MAINT MANUAL REF:		
		29-00-71		
		FOR OTHER SYS DETAILS SEE:		
		29-11-02-07		
		29-11-05-06		
		29-11-52-01		
		29-31-00-03		
		29-32-51-01		
		29-33-52-01		
		33-13-01-70		
125	NAS514P632-5	..SCREW	107107	4
130	BACS12CB06-5	..SCREW-	107107	4
		USED ON:		
		233N3205-19		
		233N3205-21		
130	NAS1801-06-5	..SCREW-	107107	4
		OPTIONAL PART:		
		BACS12HN06-5		
		USED ON:		
		233N3205-27		
		233N3205-25		
		233N3205-24		
130	BACS12HN06-5	..SCREW-	107107	4
		OPTIONAL PART:		
		NAS1801-06-5		
		USED ON:		
		233N3205-27		
		233N3205-25		
		233N3205-24		
130	BACS12HN06-5	..SCREW-	107107	4
		USED ON:		
		233N3205-26		
135	MS35338-41	..WASHER-	107107	4
		USED ON:		
		233N3205-19		
		233N3205-21		
135	BACW10EC06S	..WASHER-	107107	4
		USED ON:		
		233N3205-26		
		233N3205-25		
		233N3205-24		

MISSING ITEM NUMBERS NOT APPLICABLE

– ITEM NOT ILLUSTRATED

BOEING PROPRIETARY - Copyright © - Unpublished Work - See title page for details.

FIG ITEM	PART NUMBER	1 2 3 4 5 6 7 NOMENCLATURE	EFFECT FROM TO	UNITS PER ASSY
5				
135	MS35338-41	..WASHER-	107107	4
		OPTIONAL PART:		
		BACW10EC06S		
		USED ON:		
		233N3205-27		
135	BACW10EC06S	..WASHER-	107107	4
		OPTIONAL PART:		
		MS35338-41		
		USED ON:		
		233N3205-27		
140	233N3250-8	..BRACKET-SPRT	107107	1
145	69B46200-11	..STANDOFF	107107	4
150	233N3205-2	..BASEPLATE ASSY-	107107	1
		SUPPLIER CODE:		
		V89954		
		USED ON:		
		233N3205-19		
		233N3205-21		
		233N3205-24		
		233N3205-25		
		233N3205-26		
152	233N3205-30	..BASEPLATE ASSY-	107107	1
		SUPPLIER CODE:		
		V89954		
		USED ON:		
		233N3205-27		
155	PFSC35-38ASEMB	...STUD ASSY-	107107	4
		SUPPLIER CODE:		
		V72794		
		SPECIFICATION NUMBER:		
		BACS21DX1B		
		USED ON:		
		233N3205-2		
160	SF6G6CBB5D	...NUT	107107	3
		SUPPLIER CODE:		
		V12324		
		SPECIFICATION NUMBER:		
		BACN10PA06-6		
165	233N3205-3	...BASEPLATE-	107107	1
		SUPPLIER CODE:		
		V89954		
		USED ON:		
		233N3205-2		
168	BACP10U0600T	...PANEL ASSY-	107107	1
		USED ON:		
		233N3205-30		
170	233T3200-2	.PANEL ASSY	107107	1

MISSING ITEM NUMBERS NOT APPLICABLE

– ITEM NOT ILLUSTRATED

BOEING PROPRIETARY - Copyright © - Unpublished Work - See title page for details.

FIG ITEM	PART NUMBER	1 2 3 4 5 6 7 NOMENCLATURE	EFFECT FROM TO	UNITS PER ASSY
5				
172	BACS21DD1B	..STUD ASSY	107107	3
		SUPPLIER CODE:		
		V08524		
		SPECIFICATION NUMBER:		
		BACS21DD1B		
174	233T3200-4	..BASEPLATE	107107	1
175	233N3202-17	.PANEL ASSY-ANN. LIGHTS	107107	1
		(CUSTOMER FURNISHED)		
		SUPPLIER CODE:		
		V89954		
		MISCELLANEOUS DATA:		
		FOR SPARES PROCURE		
		DETAIL PARTS		
		ELECTRICAL EQUIP NUMBER:		
		M10394		
		COMPONENT MAINT MANUAL REF:		
		33-16-71		
		POST SERVICE BULLETIN:		
		24-0048		
		FOR OTHER SYS DETAILS SEE:		
		22-24-51-01		
		27-21-53-01		
		27-41-55-01		
		27-61-51-01		
		27-62-52-01		
		30-31-51-01		
		30-32-51-01		
		30-33-51-01		
		32-42-52-01		
		52-71-51-01		
180	NAS514P632-5	..SCREW	107107	3
185	BACS12CB06-5	..SCREW	107107	3
190	MS35338-41	..WASHER	107107	3
195	233N3250-7	..BRACKET-CONN.	107107	1
200	69B46200-10	..STANDOFF	107107	3
205	233N3202-2	..BASEPLATE ASSY-	107107	1
		SUPPLIER CODE:		
		V89954		
210	BACS21DD1B	...STUD ASSY	107107	4
		SUPPLIER CODE:		
		V08524		
		SPECIFICATION NUMBER:		
		BACS21DD1B		
225	BACP10U0225T	.PANEL	107107	2

MISSING ITEM NUMBERS NOT APPLICABLE

– ITEM NOT ILLUSTRATED

BOEING PROPRIETARY - Copyright © - Unpublished Work - See title page for details.

FIG ITEM	PART NUMBER	1 2 3 4 5 6 7 NOMENCLATURE	EFFECT FROM TO	UNITS PER ASSY
5				
235	622-6827-002	.PANEL ASSY-HF CONT (CUSTOMER FURNISHED) SUPPLIER CODE: V4V792 ELECTRICAL EQUIP NUMBER: M00082 COMPONENT MAINT MANUAL REF: 23-10-73 FOR BREAKDOWN SEE: 23-11-02-01	107107	RF
235	622-5432-002	.PANEL ASSY-HF CONT (CUSTOMER FURNISHED) SUPPLIER CODE: V4V792 ELECTRICAL EQUIP NUMBER: M00082 COMPONENT MAINT MANUAL REF: 23-10-71 FOR BREAKDOWN SEE: 23-11-02-01	107107	RF
240	233N3211-11	.PANEL ASSY-BATTERY/STBY PWR SUPPLIER CODE: V89954 ELECTRICAL EQUIP NUMBER: M10062 COMPONENT MAINT MANUAL REF: 24-33-71 PRE SERVICE BULLETIN: 24-0125R1 PRE ALERT SB: 33A0044 FOR OTHER SYS DETAILS SEE: 24-31-01-11 24-31-03-10 24-33-04-02 33-13-01-70	107107	1

MISSING ITEM NUMBERS NOT APPLICABLE

– ITEM NOT ILLUSTRATED

BOEING PROPRIETARY - Copyright © - Unpublished Work - See title page for details.

FIG ITEM	PART NUMBER	1 2 3 4 5 6 7 NOMENCLATURE	EFFECT FROM TO	UNITS PER ASSY
5				
240	233N3211-31	.PANEL ASSY-BATTERY/STBY PWR SUPPLIER CODE: V89954 ELECTRICAL EQUIP NUMBER: M10062 COMPONENT MAINT MANUAL REF: 24-33-71 QUALIFIED I/W DATA: 233N3211-24 -26 -31 -39 -40 ARE ALL INTERCHANGEABLE EXCEPT SUBJECT TO CUSTOMER PREFERENCE PRE SERVICE BULLETIN: 24-0125R1 PRE ALERT SB: 33A0044 FOR OTHER SYS DETAILS SEE: 24-31-01-11 24-31-03-10 24-33-04-02 33-13-01-70	107107	1
240	233N3211-1011	.PANEL ASSY-BATTERY/STBY PWR SUPPLIER CODE: V89954 ELECTRICAL EQUIP NUMBER: M10062 COMPONENT MAINT MANUAL REF: 24-33-71 PRE SERVICE BULLETIN: 24-0125R1 POST ALERT SB: 33A0044 FOR OTHER SYS DETAILS SEE: 24-31-01-11 24-31-03-10 24-33-04-02 33-13-01-70	107107	1

MISSING ITEM NUMBERS NOT APPLICABLE

– ITEM NOT ILLUSTRATED

BOEING PROPRIETARY - Copyright © - Unpublished Work - See title page for details.

FIG ITEM	PART NUMBER	1 2 3 4 5 6 7 NOMENCLATURE	EFFECT FROM TO	UNITS PER ASSY
5				
240	233N3211-1031	.PANEL ASSY-BATTERY/STBY PWR SUPPLIER CODE: V89954 ELECTRICAL EQUIP NUMBER: M10062 COMPONENT MAINT MANUAL REF: 24-33-71 PRE SERVICE BULLETIN: 24-0125R1 POST ALERT SB: 33A0044 FOR OTHER SYS DETAILS SEE: 24-31-01-11 24-31-03-10 24-33-04-02 33-13-01-70	107107	1
245	NAS514P632-5	..SCREW	107107	3
250	BACS12CB06-5	..SCREW	107107	3
255	MS35338-41	..WASHER	107107	3
260	233N3250-5	..BRACKET-CONN.	107107	1
265	69B46200-17	..STANDOFF	107107	3
270	233N3211-49	..BASEPLATE ASSY- SUPPLIER CODE: V89954	107107	1
275	PFSC35-38ASEMB	...STUD ASSY SUPPLIER CODE: V72794 SPECIFICATION NUMBER: BACS21DX1B	107107	4
280	SF6G6CBB5D	...NUT- SUPPLIER CODE: V12324	107107	2
285	BACP10U0225NC	...PANEL ASSY-	107107	1

MISSING ITEM NUMBERS NOT APPLICABLE

– ITEM NOT ILLUSTRATED

BOEING PROPRIETARY - Copyright © - Unpublished Work - See title page for details.

FIG ITEM	PART NUMBER	1 2 3 4 5 6 7 NOMENCLATURE	EFFECT FROM TO	UNITS PER ASSY
5				
290	233N3209-22	.PANEL ASSY-E/E SUPPLIER CODE: V89954 ELECTRICAL EQUIP NUMBER: M10063 COMPONENT MAINT MANUAL REF: 24-22-71 QUALIFIED I/W DATA: 233N3209-12, -18, -20, -22, -25, -26, -27 ARE ALL INTERCHANGEABLE EXCEPT SUBJEC5T TO CUSTOMER PREFERENCE 233N3209-12, -18, -20, -22, -25, -26, -27 ARE ALL INTERCHANGEABLE EXCEPT SUBJECT TO CUSTOMER PREFEERNCE 233N3209-12,-18, -20, -22, -25, -26, -27 ARE ALL INTERCHANGEABLE EXCEPT SUBJECT TO CUSTOMER PREFERENCE OPTIONAL PART: 233N3209-18 V89954 PRE ALERT SB: 33A0044 FOR OTHER SYS DETAILS SEE: 24-11-52-01 24-22-01-04 24-41-51-01 24-51-02-01 33-13-01-70	107107	1

MISSING ITEM NUMBERS NOT APPLICABLE

– ITEM NOT ILLUSTRATED

BOEING PROPRIETARY - Copyright © - Unpublished Work - See title page for details.

FIG ITEM	PART NUMBER	1 2 3 4 5 6 7 NOMENCLATURE	EFFECT FROM TO	UNITS PER ASSY
5				
290	233N3209-18	.PANEL ASSY-E/E SUPPLIER CODE: V89954 ELECTRICAL EQUIP NUMBER: M10063 COMPONENT MAINT MANUAL REF: 24-22-71 QUALIFIED I/W DATA: 233N3209-12 -18 -20 -22 -25 -26 -27 ARE ALL INTERCHANGEABLE EXCEPT SUBJECT TO CUSTOMER PREFERENCE OPTIONAL PART: 233N3209-22 V89954 PRE ALERT SB: 33A0044 FOR OTHER SYS DETAILS SEE: 24-11-52-01 24-22-01-04 24-41-51-01 24-51-02-01 33-13-01-70	107107	1
290	233N3209-1022	.PANEL ASSY-E/E SUPPLIER CODE: V89954 ELECTRICAL EQUIP NUMBER: M10063 COMPONENT MAINT MANUAL REF: 24-22-71 POST ALERT SB: 33A0044 FOR OTHER SYS DETAILS SEE: 24-11-52-01 24-22-01-04 24-41-51-01 24-51-02-01 33-13-01-70	107107	1

MISSING ITEM NUMBERS NOT APPLICABLE

– ITEM NOT ILLUSTRATED

BOEING PROPRIETARY - Copyright © - Unpublished Work - See title page for details.

FIG ITEM	PART NUMBER	1 2 3 4 5 6 7 NOMENCLATURE	EFFECT FROM TO	UNITS PER ASSY
5				
290	233N3209-1018	.PANEL ASSY-E/E	107107	1
		SUPPLIER CODE:		
		V89954		
		ELECTRICAL EQUIP NUMBER:		
		M10063		
		COMPONENT MAINT MANUAL REF:		
		24-22-71		
		POST ALERT SB:		
		33A0044		
		FOR OTHER SYS DETAILS SEE:		
		24-11-52-01		
		24-22-01-04		
		24-41-51-01		
		24-51-02-01		
		33-13-01-70		
295	NAS514P632-5	..SCREW	107107	4
300	BACS12CB06-5	..SCREW	107107	4
305	MS35338-41	..WASHER	107107	4
310	233N3209-6	..BRACKET ASSY-	107107	RF
		SUPPLIER CODE:		
		V89954		
320	69B46200-12	..STANDOFF	107107	4
325	233N3209-2	..BASEPLATE ASSY-	107107	1
		SUPPLIER CODE:		
		V89954		
330	PFSC35-38ASEMB	...STUD ASSY-	107107	4
		SUPPLIER CODE:		
		V72794		
		SPECIFICATION NUMBER:		
		BACS21DX1B		
335	SF6G6CBB5D	...NUT	107107	4
		SUPPLIER CODE:		
		V12324		
		SPECIFICATION NUMBER:		
		BACN10PA06-6		
340	233N3209-3	...BASEPLATE-	107107	1
		SUPPLIER CODE:		
		V89954		

MISSING ITEM NUMBERS NOT APPLICABLE

– ITEM NOT ILLUSTRATED

BOEING PROPRIETARY - Copyright © - Unpublished Work - See title page for details.

FIG ITEM	PART NUMBER	1 2 3 4 5 6 7 NOMENCLATURE	EFFECT FROM TO	UNITS PER ASSY
5				
345	233N3222-8	.PANEL ASSY-APU START SUPPLIER CODE: V89954 ELECTRICAL EQUIP NUMBER: M10324 COMPONENT MAINT MANUAL REF: 49-61-53 QUALIFIED I/W DATA: THE 233N3222-300 PANEL ASSY IS I/W THE 233N3222-8 PANEL ASSY T/W THE S233T100-6025 LIGHTPLATE AND BP248-127 KNOB. FOR OTHER SYS DETAILS SEE: 49-41-00-03 49-70-00-02 33-13-01-70	107107	1
350	NAS514P632-5	..SCREW	107107	3
355	BACS12CB06-5	..SCREW	107107	3
360	MS35338-41	..WASHER	107107	3
365	233N3250-16	..BRACKET-SPRT	107107	1
370	69B46200-11	..STANDOFF	107107	3
375	233N3222-2	..BASEPLATE ASSY- SUPPLIER CODE: V89954	107107	1
380	BACS21DD1B	...STUD ASSY SUPPLIER CODE: V08524 SPECIFICATION NUMBER: BACS21DD1B	107107	4
385	SF6G6CBB5D	...NUT SUPPLIER CODE: V12324 SPECIFICATION NUMBER: BACN10PA06-6	107107	2
390	233N3222-3	...BASEPLATE- SUPPLIER CODE: V89954	107107	1
400	93A152-50	.PANEL ASSY-VOICE RECORDER (CUSTOMER FURNISHED) SUPPLIER CODE: V06141 ELECTRICAL EQUIP NUMBER: M00050 COMPONENT MAINT MANUAL REF: 23-70-01 FOR BREAKDOWN SEE: 23-71-05-01	107107	RF

MISSING ITEM NUMBERS NOT APPLICABLE

– ITEM NOT ILLUSTRATED

BOEING PROPRIETARY - Copyright © - Unpublished Work - See title page for details.

FIG ITEM	PART NUMBER	1 2 3 4 5 6 7 NOMENCLATURE	EFFECT FROM TO	UNITS PER ASSY
5				
405	233N3214-27	.PANEL ASSY-LIGHTING CONT SUPPLIER CODE: V89954 ELECTRICAL EQUIP NUMBER: M10056 COMPONENT MAINT MANUAL REF: 33-11-71 QUALIFIED I/W DATA: 233N3214-24 -27 -31 -32 -33 ARE ALL INTERCHANGEABLE EXCEPT SUBJECT TO CUSTOMER PREFERENCE OF KORRY OR MASTER SPECIALTIES LIGHTED PUSHBUTTON SWITCHES FOR OTHER SYS DETAILS SEE: 33-11-03-04 33-11-51-14 33-13-01-70 33-42-01-05	107107	1
410	NAS514P632-5	..SCREW	107107	3
415	BACS12CB06-5	..SCREW	107107	3
420	MS35338-41	..WASHER-	107107	3
425	233N3250-34	..BRACKET-CONN.	107107	1
430	69B46200-14	..STANDOFF	107107	3
435	233N3214-16	..BASEPLATE ASSY- SUPPLIER CODE: V89954	107107	1
440	PFSC35-38ASEMB	...STUD ASSY- SUPPLIER CODE: V72794 SPECIFICATION NUMBER: BACS21DX1B	107107	3
445	SF6G6CBB5D	...NUT SUPPLIER CODE: V12324 SPECIFICATION NUMBER: BACN10PA06-6	107107	3
450	233N3214-17	...BASEPLATE- SUPPLIER CODE: V89954	107107	1
455	BACP10U0337T	.PANEL ASSY	107107	1

MISSING ITEM NUMBERS NOT APPLICABLE

— ITEM NOT ILLUSTRATED

BOEING PROPRIETARY - Copyright © - Unpublished Work - See title page for details.

FIG ITEM	PART NUMBER	1 2 3 4 5 6 7 NOMENCLATURE	EFFECT FROM TO	UNITS PER ASSY
5				
460	233T3210-25	.PANEL ASSY-EMER LIGHTS SUPPLIER CODE: V89954 ELECTRICAL EQUIP NUMBER: M00043 COMPONENT MAINT MANUAL REF: 33-51-03 QUALIFIED I/W DATA: 233N3210-22 -25 -28 -29 -30 ARE ALL INTERCHANGEABLE EXCEPT SUBJECT TO CUSTOMER PREFERENCE PRE ALERT SB: 33A0044 FOR OTHER SYS DETAILS SEE: 33-13-01-70 33-51-08-01 35-21-51-01	107107	1
460	233T3210-1025	.PANEL ASSY-EMER LIGHTS SUPPLIER CODE: V89954 ELECTRICAL EQUIP NUMBER: M00043 COMPONENT MAINT MANUAL REF: 33-51-03 POST ALERT SB: 33A0044 FOR OTHER SYS DETAILS SEE: 33-13-01-70 33-51-08-01 35-21-51-01	107107	1
465	NAS514P632-5	..SCREW	107107	3
470	NAS1801-06-5	..SCREW	107107	3
475	MS35338-41	..WASHER	107107	3
480	233T6200-82	..BRACKET-SPRT	107107	1
485	69B46200-10	..STANDOFF	107107	3
490	233T3210-17	..BASEPLATE ASSY- SUPPLIER CODE: V89954	107107	1
495	BACS21DD1B	...STUD ASSY SUPPLIER CODE: V08524 SPECIFICATION NUMBER: BACS21DD1B	107107	4

MISSING ITEM NUMBERS NOT APPLICABLE

– ITEM NOT ILLUSTRATED

BOEING PROPRIETARY - Copyright © - Unpublished Work - See title page for details.

FIG ITEM	PART NUMBER	1 2 3 4 5 6 7 NOMENCLATURE	EFFECT FROM TO	UNITS PER ASSY
5				
500	SF6G6CBB5D	...NUT SUPPLIER CODE: V12324 SPECIFICATION NUMBER: BACN10PA06-6	107107	2
505	BACP10U0225N	...PANEL	107107	1
510	233N3223-37	.PANEL ASSY-ENG START/RAT SUPPLIER CODE: V89954 ELECTRICAL EQUIP NUMBER: M10468 COMPONENT MAINT MANUAL REF: 31-12-01 PRE ALERT SB: 33A0044 FOR OTHER SYS DETAILS SEE: 29-21-54-01 33-13-01-70 73-21-52-01 74-31-51-01 80-11-09-03	107107	1
510	233N3223-39	.PANEL ASSY-ENG START/RAT SUPPLIER CODE: V89954 MISCELLANEOUS DATA: FOR SPARES PROCURE NEXT HIGHER ASSY ELECTRICAL EQUIP NUMBER: M10468 COMPONENT MAINT MANUAL REF: 31-12-01 QUALIFIED I/W DATA: THE 233N3223-300 PANEL ASSY IS I/W THE 233N3223-39 PANEL ASSY T/W THE S233T100-6046 LIGHTPLATE AND (3) BP248-127 KNOBS. PRE ALERT SB: 33A0044 FOR OTHER SYS DETAILS SEE: 29-21-54-01 33-13-01-70 73-21-52-01 74-31-51-01 80-11-09-03	107107	1

MISSING ITEM NUMBERS NOT APPLICABLE

– ITEM NOT ILLUSTRATED

BOEING PROPRIETARY - Copyright © - Unpublished Work - See title page for details.

FIG ITEM	PART NUMBER	1 2 3 4 5 6 7 NOMENCLATURE	EFFECT FROM TO	UNITS PER ASSY
5				
510	233N3223-32	.PANEL ASSY-ENG START/RAT SUPPLIER CODE: V89954 ELECTRICAL EQUIP NUMBER: M10468 COMPONENT MAINT MANUAL REF: 31-12-01 PRE ALERT SB: 33A0044R1 FOR OTHER SYS DETAILS SEE: 29-21-54-01 33-13-01-70 73-21-52-01 74-31-51-01 80-11-09-03	107107	1
510	233N3223-1037	.PANEL ASSY-ENG START/RAT SUPPLIER CODE: V89954 ELECTRICAL EQUIP NUMBER: M10468 COMPONENT MAINT MANUAL REF: 31-12-01 POST ALERT SB: 33A0044 FOR OTHER SYS DETAILS SEE: 29-21-54-01 33-13-01-70 73-21-52-01 74-31-51-01 80-11-09-03	107107	1
510	233N3223-1039	.PANEL ASSY-ENG START/RAT SUPPLIER CODE: V89954 ELECTRICAL EQUIP NUMBER: M10468 COMPONENT MAINT MANUAL REF: 31-12-01 POST ALERT SB: 33A0044 FOR OTHER SYS DETAILS SEE: 29-21-54-01 33-13-01-70 73-21-52-01 74-31-51-01 80-11-09-03	107107	1

MISSING ITEM NUMBERS NOT APPLICABLE

– ITEM NOT ILLUSTRATED

BOEING PROPRIETARY - Copyright © - Unpublished Work - See title page for details.

FIG ITEM	PART NUMBER	1 2 3 4 5 6 7 NOMENCLATURE	EFFECT FROM TO	UNITS PER ASSY
5				
510	233N3223-1032	.PANEL ASSY-ENG START/RAT	107107	1
		SUPPLIER CODE:		
		V89954		
		ELECTRICAL EQUIP NUMBER:		
		M10468		
		COMPONENT MAINT MANUAL REF:		
		31-12-01		
		POST ALERT SB:		
		33A0044R1		
		FOR OTHER SYS DETAILS SEE:		
		29-21-54-01		
		33-13-01-70		
		73-21-52-01		
		74-31-51-01		
		80-11-09-03		
515	NAS514P632-5	..SCREW	107107	3
520	BACS12CB06-5	..SCREW	107107	3
525	MS35338-41	..WASHER	107107	3
530	233N3223-35	..BRACKET ASSY-SPRT	107107	RF
		SUPPLIER CODE:		
		V89954		
540	69B46200-13	..STANDOFF	107107	3
545	233N3223-8	..BASEPLATE ASSY-	107107	1
		SUPPLIER CODE:		
		V89954		
550	PFSC35-38ASEMB	...STUD ASSY-	107107	4
		SUPPLIER CODE:		
		V72794		
		SPECIFICATION NUMBER:		
		BACS21DX1B		
555	SF6G6CBB5D	...NUT	107107	4
		SUPPLIER CODE:		
		V12324		
		SPECIFICATION NUMBER:		
		BACN10PA06-6		
560	233N3223-9	...BASEPLATE-	107107	1
		SUPPLIER CODE:		
		V89954		

MISSING ITEM NUMBERS NOT APPLICABLE

– ITEM NOT ILLUSTRATED

BOEING PROPRIETARY - Copyright © - Unpublished Work - See title page for details.

FIG ITEM	PART NUMBER	1 2 3 4 5 6 7 NOMENCLATURE	EFFECT FROM TO	UNITS PER ASSY
5				
565	233N3206-13	.PANEL ASSY-FUEL CONT SUPPLIER CODE: V89954 ELECTRICAL EQUIP NUMBER: M10055 COMPONENT MAINT MANUAL REF: 28-41-71 PRE ALERT SB: 33A0044R1 28A0105R1 PRE COMPONENT SB: 233N3206-28-03 FOR OTHER SYS DETAILS SEE: 28-22-51-01 28-41-51-01 33-13-01-70	107107	1
565	233N3206-14	.PANEL ASSY-FUEL CONT SUPPLIER CODE: V89954 ELECTRICAL EQUIP NUMBER: M10055 COMPONENT MAINT MANUAL REF: 28-41-71 PRE ALERT SB: 33A0044 28A0105R1 PRE COMPONENT SB: 233N3206-28-03 FOR OTHER SYS DETAILS SEE: 28-22-51-01 28-41-51-01 33-13-01-70	107107	1
565	233N3206-15	.PANEL ASSY-FUEL CONT SUPPLIER CODE: V89954 ELECTRICAL EQUIP NUMBER: M10055 COMPONENT MAINT MANUAL REF: 28-41-71 PRE ALERT SB: 33A0044 28A0105R1 PRE COMPONENT SB: 233N3206-28-03 FOR OTHER SYS DETAILS SEE: 28-22-51-01 28-41-51-01 33-13-01-70	107107	1

MISSING ITEM NUMBERS NOT APPLICABLE

– ITEM NOT ILLUSTRATED

BOEING PROPRIETARY - Copyright © - Unpublished Work - See title page for details.

FIG ITEM	PART NUMBER	1 2 3 4 5 6 7 NOMENCLATURE	EFFECT FROM TO	UNITS PER ASSY
5				
565	233N3206-16	.PANEL ASSY-FUEL CONT SUPPLIER CODE: V89954 ELECTRICAL EQUIP NUMBER: M10055 COMPONENT MAINT MANUAL REF: 28-41-71 PRE ALERT SB: 33A0044 28A0105R1 PRE COMPONENT SB: 233N3206-28-03 FOR OTHER SYS DETAILS SEE: 28-22-51-01 28-41-51-01 33-13-01-70	107107	1
565	233N3206-17	.PANEL ASSY-FUEL CONT SUPPLIER CODE: V89954 ELECTRICAL EQUIP NUMBER: M10055 COMPONENT MAINT MANUAL REF: 28-41-71 PRE ALERT SB: 33A0044R1 28A0105R1 PRE COMPONENT SB: 233N3206-28-03 FOR OTHER SYS DETAILS SEE: 28-22-51-01 28-41-51-01 33-13-01-70	107107	1
565	233N3206-1013	.PANEL ASSY-FUEL CONT SUPPLIER CODE: V89954 ELECTRICAL EQUIP NUMBER: M10055 COMPONENT MAINT MANUAL REF: 28-41-71 POST ALERT SB: 33A0044R1 PRE ALERT SB: 28A0105R1 PRE COMPONENT SB: 233N3206-28-03 FOR OTHER SYS DETAILS SEE: 28-22-51-01 28-41-51-01 33-13-01-70	107107	1

MISSING ITEM NUMBERS NOT APPLICABLE

– ITEM NOT ILLUSTRATED

BOEING PROPRIETARY - Copyright © - Unpublished Work - See title page for details.

FIG ITEM	PART NUMBER	1 2 3 4 5 6 7 NOMENCLATURE	EFFECT FROM TO	UNITS PER ASSY
5				
565	233N3206-1014	.PANEL ASSY-FUEL CONT SUPPLIER CODE: V89954 ELECTRICAL EQUIP NUMBER: M10055 COMPONENT MAINT MANUAL REF: 28-41-71 POST ALERT SB: 33A0044 PRE ALERT SB: 28A0105R1 PRE COMPONENT SB: 233N3206-28-03 FOR OTHER SYS DETAILS SEE: 28-22-51-01 28-41-51-01 33-13-01-70	107107	1
565	233N3206-1015	.PANEL ASSY-FUEL CONT SUPPLIER CODE: V89954 ELECTRICAL EQUIP NUMBER: M10055 COMPONENT MAINT MANUAL REF: 28-41-71 POST ALERT SB: 33A0044 PRE ALERT SB: 28A0105R1 PRE COMPONENT SB: 233N3206-28-03 FOR OTHER SYS DETAILS SEE: 28-22-51-01 28-41-51-01 33-13-01-70	107107	1

MISSING ITEM NUMBERS NOT APPLICABLE

– ITEM NOT ILLUSTRATED

BOEING PROPRIETARY - Copyright © - Unpublished Work - See title page for details.

FIG ITEM	PART NUMBER	1 2 3 4 5 6 7 NOMENCLATURE	EFFECT FROM TO	UNITS PER ASSY
5				
565	233N3206-1016	.PANEL ASSY-FUEL CONT SUPPLIER CODE: V89954 ELECTRICAL EQUIP NUMBER: M10055 COMPONENT MAINT MANUAL REF: 28-41-71 POST ALERT SB: 33A0044 PRE ALERT SB: 28A0105R1 PRE COMPONENT SB: 233N3206-28-03 FOR OTHER SYS DETAILS SEE: 28-22-51-01 28-41-51-01 33-13-01-70	107107	1
565	233N3206-1017	.PANEL ASSY-FUEL CONT SUPPLIER CODE: V89954 ELECTRICAL EQUIP NUMBER: M10055 COMPONENT MAINT MANUAL REF: 28-41-71 POST ALERT SB: 33A0044R1 PRE ALERT SB: 28A0105R1 PRE COMPONENT SB: 233N3206-28-03 FOR OTHER SYS DETAILS SEE: 28-22-51-01 28-41-51-01 33-13-01-70	107107	1
565	233N3206-2013	.PANEL ASSY-FUEL CONT SUPPLIER CODE: V89954 ELECTRICAL EQUIP NUMBER: M10055 COMPONENT MAINT MANUAL REF: 28-41-71 POST ALERT SB: 28A0105R1 POST COMPONENT SB: 233N3206-28-03 FOR OTHER SYS DETAILS SEE: 28-22-51-01 28-41-51-01 33-13-01-70	107107	1

MISSING ITEM NUMBERS NOT APPLICABLE

– ITEM NOT ILLUSTRATED

BOEING PROPRIETARY - Copyright © - Unpublished Work - See title page for details.

FIG ITEM	PART NUMBER	1 2 3 4 5 6 7 NOMENCLATURE	EFFECT FROM TO	UNITS PER ASSY
5				
565	233N3206-2014	.PANEL ASSY-FUEL CONT SUPPLIER CODE: V89954 ELECTRICAL EQUIP NUMBER: M10055 COMPONENT MAINT MANUAL REF: 28-41-71 POST ALERT SB: 28A0105R1 POST COMPONENT SB: 233N3206-28-03 FOR OTHER SYS DETAILS SEE: 28-22-51-01 28-41-51-01 33-13-01-70	107107	1
565	233N3206-2015	.PANEL ASSY-FUEL CONT SUPPLIER CODE: V89954 ELECTRICAL EQUIP NUMBER: M10055 COMPONENT MAINT MANUAL REF: 28-41-71 POST ALERT SB: 28A0105R1 POST COMPONENT SB: 233N3206-28-03 FOR OTHER SYS DETAILS SEE: 28-22-51-01 28-41-51-01 33-13-01-70	107107	1
565	233N3206-2016	.PANEL ASSY-FUEL CONT SUPPLIER CODE: V89954 ELECTRICAL EQUIP NUMBER: M10055 COMPONENT MAINT MANUAL REF: 28-41-71 POST ALERT SB: 28A0105R1 POST COMPONENT SB: 233N3206-28-03 FOR OTHER SYS DETAILS SEE: 28-22-51-01 28-41-51-01 33-13-01-70	107107	1

MISSING ITEM NUMBERS NOT APPLICABLE

– ITEM NOT ILLUSTRATED

BOEING PROPRIETARY - Copyright © - Unpublished Work - See title page for details.

FIG ITEM	PART NUMBER	1 2 3 4 5 6 7 NOMENCLATURE	EFFECT FROM TO	UNITS PER ASSY
5				
565	233N3206-2017	.PANEL ASSY-FUEL CONT SUPPLIER CODE: V89954 ELECTRICAL EQUIP NUMBER: M10055 COMPONENT MAINT MANUAL REF: 28-41-71 POST ALERT SB: 28A0105R1 POST COMPONENT SB: 233N3206-28-03 FOR OTHER SYS DETAILS SEE: 28-22-51-01 28-41-51-01 33-13-01-70	107107	1
565	233N3206-3013	.PANEL ASSY-FUEL CONT SUPPLIER CODE: V89954 ELECTRICAL EQUIP NUMBER: M10055 COMPONENT MAINT MANUAL REF: 28-41-71 POST ALERT SB: 28A0105R1 POST COMPONENT SB: 233N3206-28-03 FOR OTHER SYS DETAILS SEE: 28-22-51-01 28-41-51-01 33-13-01-70	107107	1
565	233N3206-3014	.PANEL ASSY-FUEL CONT SUPPLIER CODE: V89954 ELECTRICAL EQUIP NUMBER: M10055 COMPONENT MAINT MANUAL REF: 28-41-71 POST ALERT SB: 28A0105R1 POST COMPONENT SB: 233N3206-28-03 FOR OTHER SYS DETAILS SEE: 28-22-51-01 28-41-51-01 33-13-01-70	107107	1

MISSING ITEM NUMBERS NOT APPLICABLE

– ITEM NOT ILLUSTRATED

BOEING PROPRIETARY - Copyright © - Unpublished Work - See title page for details.

FIG ITEM	PART NUMBER	1 2 3 4 5 6 7 NOMENCLATURE	EFFECT FROM TO	UNITS PER ASSY
5				
566	233N3206-3015	.PANEL ASSY-FUEL CONT SUPPLIER CODE: V89954 ELECTRICAL EQUIP NUMBER: M10055 COMPONENT MAINT MANUAL REF: 28-41-71 POST ALERT SB: 28A0105R1 POST COMPONENT SB: 233N3206-28-03 FOR OTHER SYS DETAILS SEE: 28-22-51-01 28-41-51-01 33-13-01-70	107107	1
566	233N3206-3016	.PANEL ASSY-FUEL CONT SUPPLIER CODE: V89954 ELECTRICAL EQUIP NUMBER: M10055 COMPONENT MAINT MANUAL REF: 28-41-71 POST ALERT SB: 28A0105R1 POST COMPONENT SB: 233N3206-28-03 FOR OTHER SYS DETAILS SEE: 28-22-51-01 28-41-51-01 33-13-01-70	107107	1
566	233N3206-3017	.PANEL ASSY-FUEL CONT SUPPLIER CODE: V89954 ELECTRICAL EQUIP NUMBER: M10055 COMPONENT MAINT MANUAL REF: 28-41-71 POST ALERT SB: 28A0105R1 POST COMPONENT SB: 233N3206-28-03 FOR OTHER SYS DETAILS SEE: 28-22-51-01 28-41-51-01 33-13-01-70	107107	1
570	NAS514P632-5	..SCREW	107107	3

MISSING ITEM NUMBERS NOT APPLICABLE

– ITEM NOT ILLUSTRATED

BOEING PROPRIETARY - Copyright © - Unpublished Work - See title page for details.

FIG ITEM	PART NUMBER	1 2 3 4 5 6 7 NOMENCLATURE	EFFECT FROM TO	UNITS PER ASSY
5				
575	BACS12CB06-5	..SCREW-	107107	3
		USED ON:		
		233N3206-13		
		233N3206-14		
		233N3206-1013		
		233N3206-1014		
		PRE ALERT SB:		
		28A0105R1		
		PRE COMPONENT SB:		
		233N3206-28-03		
575	NAS1801-06-5	..SCREW-	107107	3
		MISCELLANEOUS DATA:		
		SPEC BACS12CB06-5		
		USED ON:		
		233N3206-15		
		233N3206-16		
		233N3206-17		
		233N3206-1015		
		233N3206-1016		
		233N3206-1017		
		233N3206-2015		
		233N3206-2016		
		233N3206-2017		
		233N3206-3015		
		233N3206-3016		
		233N3206-3017		
575	NAS1635-06-5	..SCREW-	107107	3
		OPTIONAL PART:		
		NAS1801-06-5		
		USED ON:		
		233N3206-2013		
		233N3206-2014		
		233N3206-3013		
		233N3206-3014		
		POST ALERT SB:		
		28A0105R1		
		POST COMPONENT SB:		
		233N3206-28-03		

MISSING ITEM NUMBERS NOT APPLICABLE

– ITEM NOT ILLUSTRATED

BOEING PROPRIETARY - Copyright © - Unpublished Work - See title page for details.

FIG ITEM	PART NUMBER	1 2 3 4 5 6 7 NOMENCLATURE	EFFECT FROM TO	UNITS PER ASSY
5				
575	NAS1801-06-5	..SCREW-	107107	3
		MISCELLANEOUS DATA:		
		SPEC BACS12CB06-5		
		OPTIONAL PART:		
		NAS1635-06-5		
		USED ON:		
		233N3206-2013		
		233N3206-2014		
		233N3206-3013		
		233N3206-3014		
		POST ALERT SB:		
		28A0105R1		
		POST COMPONENT SB:		
		233N3206-28-03		
580	MS35338-41	..WASHER	107107	3
585	233N3250-38	..BRACKET-CONN.	107107	1
590	69B46200-11	..STANDOFF	107107	3
595	233T3235-6	..BASEPLATE ASSY-	107107	1
		SUPPLIER CODE:		
		V89954		
600	BACS21DD1B	...STUD ASSY	107107	4
		SUPPLIER CODE:		
		V08524		
		SPECIFICATION NUMBER:		
		BACS21DD1B		
605	SF6G6CBB5D	...NUT	107107	3
		SUPPLIER CODE:		
		V12324		
		SPECIFICATION NUMBER:		
		BACN10PA06-6		
610	BACP10U0412N	...BASEPLATE	107107	1
662	20-212-09	.INDICATOR-INTEGRATED FUEL	107107	RF
		QTY		
		SUPPLIER CODE:		
		V35012		
		SPECIFICATION NUMBER:		
		S345N011-7		
		ELECTRICAL EQUIP NUMBER:		
		M10054		
		COMPONENT MAINT MANUAL REF:		
		28-41-60		
		PRE SERVICE BULLETIN:		
		31-0173		
		FOR BREAKDOWN SEE:		
		28-41-04-02		

MISSING ITEM NUMBERS NOT APPLICABLE

– ITEM NOT ILLUSTRATED

BOEING PROPRIETARY - Copyright © - Unpublished Work - See title page for details.

FIG ITEM	PART NUMBER	1 2 3 4 5 6 7 NOMENCLATURE	EFFECT FROM TO	UNITS PER ASSY
5				
662	20-212-07	.INDICATOR-INTEGRATED FUEL QTY SUPPLIER CODE: V35012 SPECIFICATION NUMBER: S345N011-8 ELECTRICAL EQUIP NUMBER: M10054 COMPONENT MAINT MANUAL REF: 28-41-60 POST SERVICE BULLETIN: 31-0173 FOR BREAKDOWN SEE: 28-41-04-02	107107	RF
670	233N3204-18	.PANEL ASSY-ANTI-ICE SUPPLIER CODE: V89954 ELECTRICAL EQUIP NUMBER: M10397 COMPONENT MAINT MANUAL REF: 30-11-72 QUALIFIED I/W DATA: 233N3204-17 -18 -20 ARE ALL INTERCHANGEABLE EXCEPT SUBJECT TO CUSTOMER PREFERENCE PRE ALERT SB: 30A0013R6 FOR OTHER SYS DETAILS SEE: 30-11-51-01 30-21-51-01 33-13-01-70	107107	1

MISSING ITEM NUMBERS NOT APPLICABLE

– ITEM NOT ILLUSTRATED

BOEING PROPRIETARY - Copyright © - Unpublished Work - See title page for details.

FIG ITEM	PART NUMBER	1 2 3 4 5 6 7 NOMENCLATURE	EFFECT FROM TO	UNITS PER ASSY
5				
670	233N3204-19	.PANEL ASSY-ANTI-ICE SUPPLIER CODE: V89954 ELECTRICAL EQUIP NUMBER: M10397 COMPONENT MAINT MANUAL REF: 30-11-72 QUALIFIED I/W DATA: 233N3204-300 PANEL ASSY IS I/W 233N3204-19 PANEL ASSY T/W S233T100-1070 LIGHTPLATE POST ALERT SB: 30A0013R6 PRE ALERT SB: 33A0044 FOR OTHER SYS DETAILS SEE: 30-11-51-01 30-21-51-01 33-13-01-70	107107	1
670	233N3204-1019	.PANEL ASSY-ANTI-ICE SUPPLIER CODE: V89954 ELECTRICAL EQUIP NUMBER: M10397 COMPONENT MAINT MANUAL REF: 30-11-72 POST ALERT SB: 33A0044 FOR OTHER SYS DETAILS SEE: 30-11-51-01 30-21-51-01 33-13-01-70	107107	1
675	NAS514P632-5	..SCREW	107107	3
680	NAS1801-06-5	..SCREW	107107	3
685	MS35338-41	..WASHER	107107	3
695	233N3250-56	..BRACKET	107107	1
700	69B46200-11	..STANDOFF	107107	3
705	233N3204-7	..BASEPLATE ASSY- SUPPLIER CODE: V89954	107107	1
710	PFSC35-38ASEMB	...STUD ASSY- SUPPLIER CODE: V72794 SPECIFICATION NUMBER: BACS21DX1B	107107	4

MISSING ITEM NUMBERS NOT APPLICABLE

– ITEM NOT ILLUSTRATED

BOEING PROPRIETARY - Copyright © - Unpublished Work - See title page for details.

FIG ITEM	PART NUMBER	1 2 3 4 5 6 7 NOMENCLATURE	EFFECT FROM TO	UNITS PER ASSY
5				
715	SF6G6CBB5D	...NUT SUPPLIER CODE: V12324 SPECIFICATION NUMBER: BACN10PA06-6	107107	2
720	233N3204-8	...BASEPLATE- SUPPLIER CODE: V89954	107107	1
725	233N3201-11	.PANEL ASSY-WSHLD CLEARANCE SUPPLIER CODE: V89954 ELECTRICAL EQUIP NUMBER: M10023 COMPONENT MAINT MANUAL REF: 30-42-01 QUALIFIED I/W DATA: 233N3201-11 PANEL ASSY T/W S233T100-1074 LIGHTPLATE AND BP248-127 KNOB IS I/W 233N3201-300 FOR OTHER SYS DETAILS SEE: 30-42-51-01 30-43-51-01 33-13-01-70	107107	1
730	NAS514P632-5	..SCREW	107107	3
735	BACS12CB06-5	..SCREW	107107	3
740	MS35338-41	..WASHER	107107	3
745	233N3250-6	..BRACKET-CONN.	107107	1
750	69B46200-5	..STANDOFF	107107	3
755	233N3201-8	..BASEPLATE ASSY- SUPPLIER CODE: V89954	107107	1
760	BACS21DD1B	...STUD ASSY SUPPLIER CODE: V08524 SPECIFICATION NUMBER: BACS21DD1B	107107	4
765	SF6G6CBB5D	...NUT SUPPLIER CODE: V12324 SPECIFICATION NUMBER: BACN10PA06-6	107107	3
770	BACP10U0262N	...BASEPLATE	107107	1

MISSING ITEM NUMBERS NOT APPLICABLE

– ITEM NOT ILLUSTRATED

BOEING PROPRIETARY - Copyright © - Unpublished Work - See title page for details.

FIG ITEM	PART NUMBER	1 2 3 4 5 6 7 NOMENCLATURE	EFFECT FROM TO	UNITS PER ASSY
5				
780	233N3210-14	.PANEL ASSY-ANTI-COLLISION LIGHTING SUPPLIER CODE: V89954 ELECTRICAL EQUIP NUMBER: M10396 COMPONENT MAINT MANUAL REF: 33-44-71 QUALIFIED I/W DATA: 233N3210-13, -14, -15, -16 ARE ALL INTERCHANGEABLE EXCEPT SUBJECT TO CUSTOMER PREFERENCE FOR OTHER SYS DETAILS SEE: 33-13-01-70, 33-41-52-01, 33-42-52-01, 33-43-51-01, 33-44-51-01	107107	1
785	NAS514P632-5	..SCREW	107107	4
790	BACS12HN06-5	..SCREW- OPTIONAL PART: NAS1801-06-5	107107	4
790	NAS1801-06-5	..SCREW- OPTIONAL PART: BACS12HN06-5	107107	4
795	BACW10EC06S	..WASHER-	107107	4
800	NAS620-6	..WASHER	107107	8
805	233N3250-41	..BRACKET	107107	1
810	69B46200-5	..STANDOFF	107107	2
815	233T6200-66	..STANDOFF	107107	2
820	233N3210-7	..BASEPLATE ASSY- SUPPLIER CODE: V89954	107107	1
825	BACS21DD1B	...STUD ASSY SUPPLIER CODE: V08524 SPECIFICATION NUMBER: BACS21DD1B	107107	4
830	SF6G6CBB5D	...NUT SUPPLIER CODE: V12324 SPECIFICATION NUMBER: BACN10PA06-6	107107	4
835	233N3210-8	...BASEPLATE- SUPPLIER CODE: V89954	107107	1

MISSING ITEM NUMBERS NOT APPLICABLE

– ITEM NOT ILLUSTRATED

BOEING PROPRIETARY - Copyright © - Unpublished Work - See title page for details.

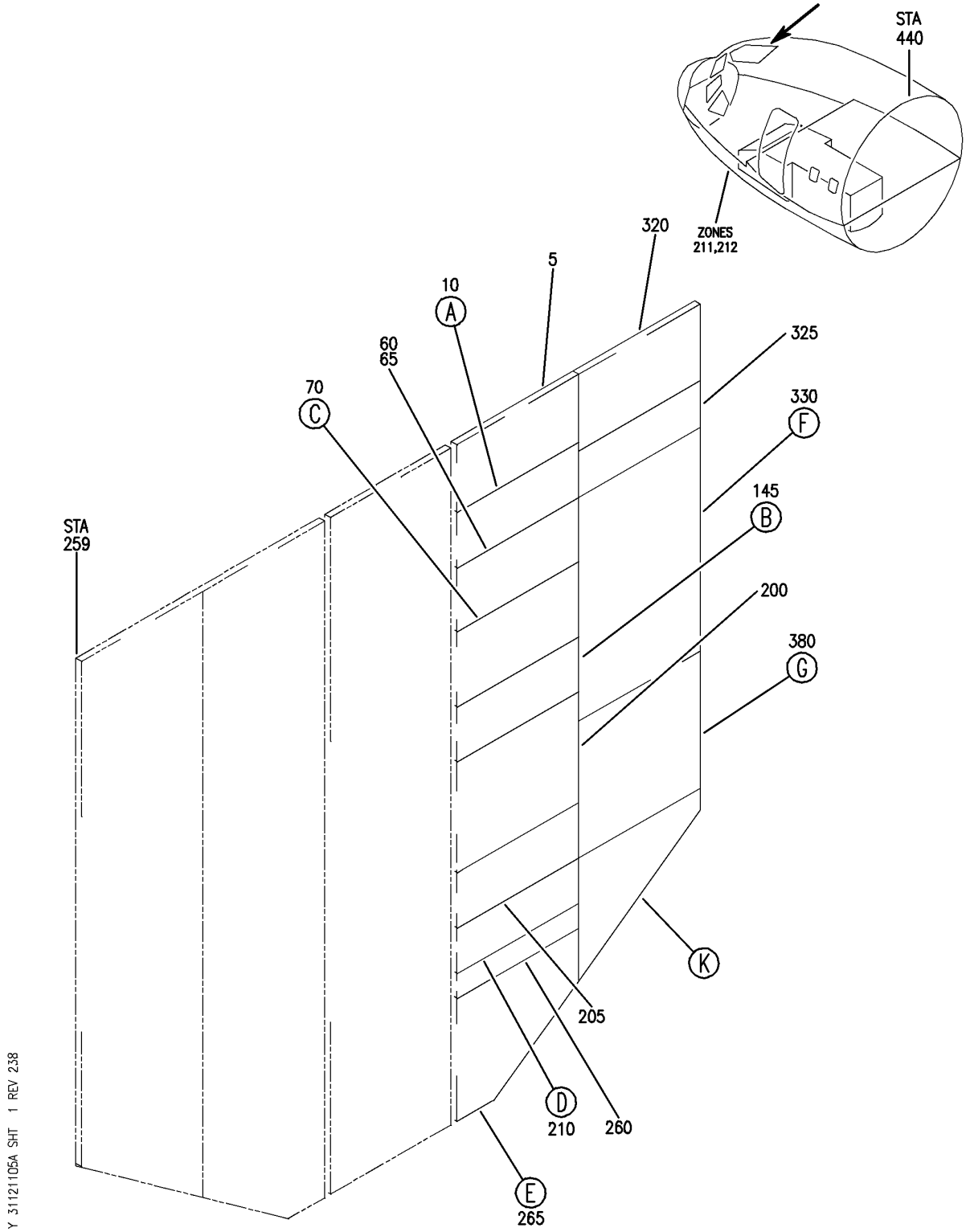

PANEL INSTL-P5 OVHD (INDICATING/RECORDING SYSTEMS ONLY)
FIGURE 5A (SHEET 1)

BOEING PROPRIETARY - Copyright © - Unpublished Work - See title page for details.

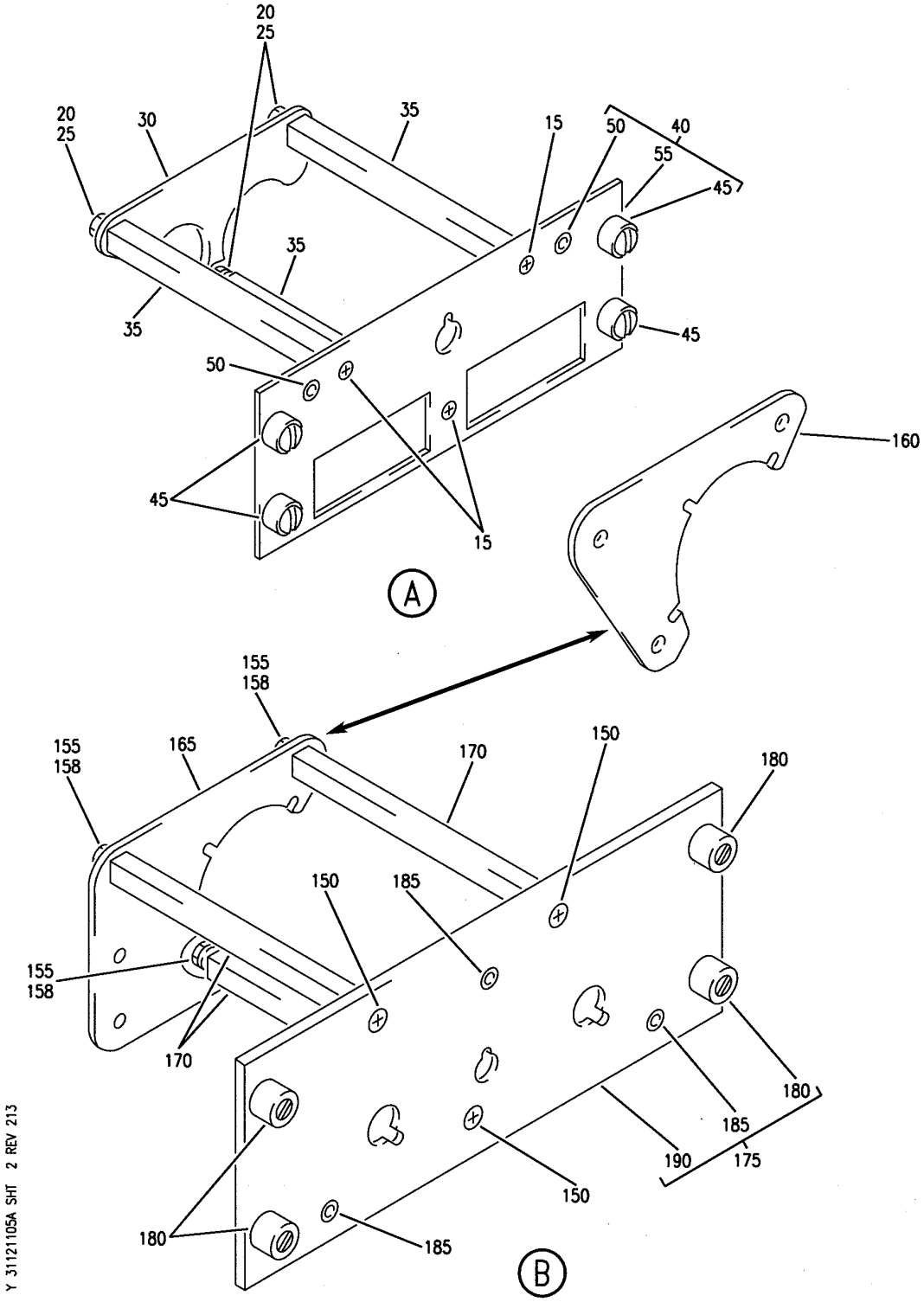

PANEL INSTL-P5 OVHD (INDICATING/RECORDING SYSTEMS ONLY)
FIGURE 5A (SHEET 2)

BOEING PROPRIETARY - Copyright © - Unpublished Work - See title page for details.

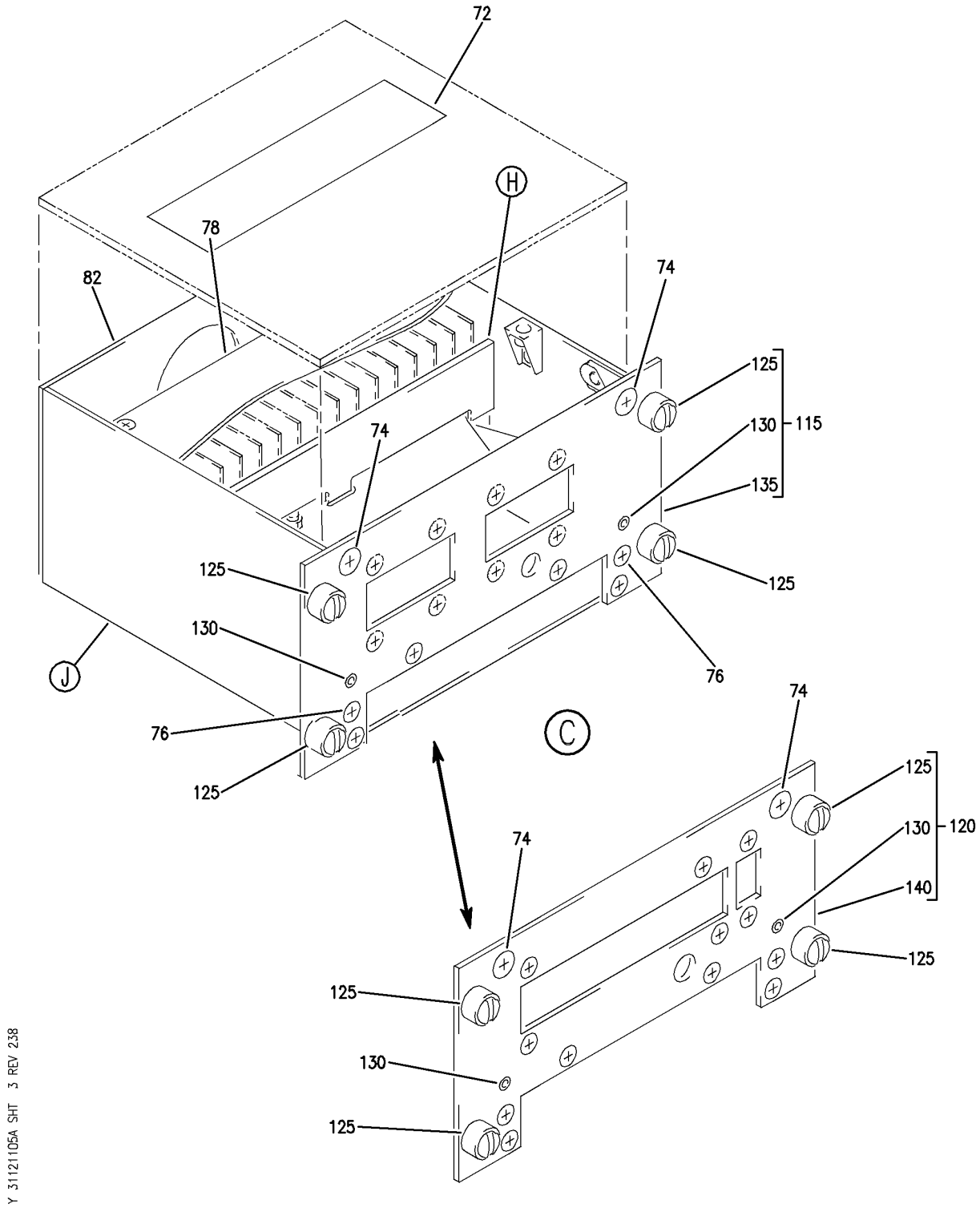

PANEL INSTL-P5 OVHD (INDICATING/RECORDING SYSTEMS ONLY)
FIGURE 5A (SHEET 3)

BOEING PROPRIETARY - Copyright © - Unpublished Work - See title page for details.

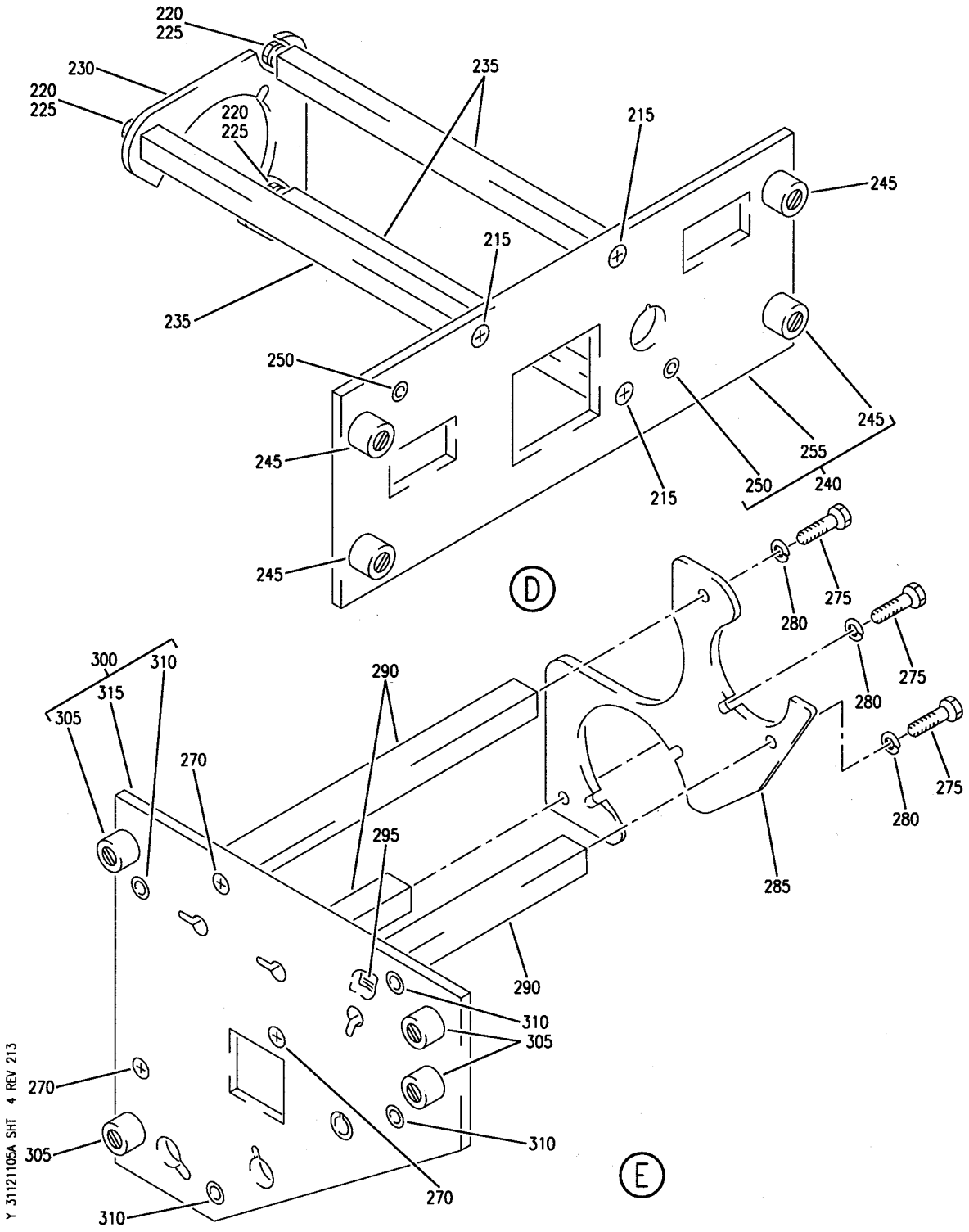

PANEL INSTL-P5 OVHD (INDICATING/RECORDING SYSTEMS ONLY)
FIGURE 5A (SHEET 4)

BOEING PROPRIETARY - Copyright © - Unpublished Work - See title page for details.

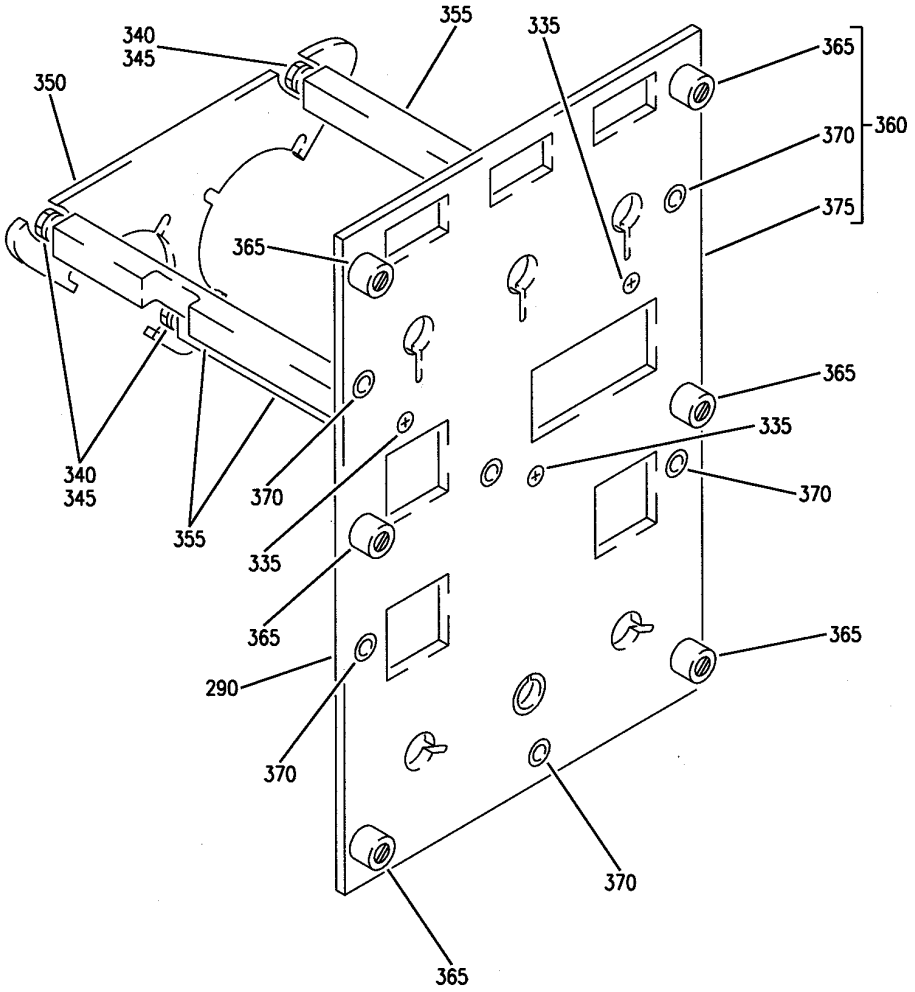

F

Y 31121105A SHT 5 REV 213

PANEL INSTL-P5 OVHD (INDICATING/RECORDING SYSTEMS ONLY)
FIGURE 5A (SHEET 5)

BOEING PROPRIETARY - Copyright © - Unpublished Work - See title page for details.

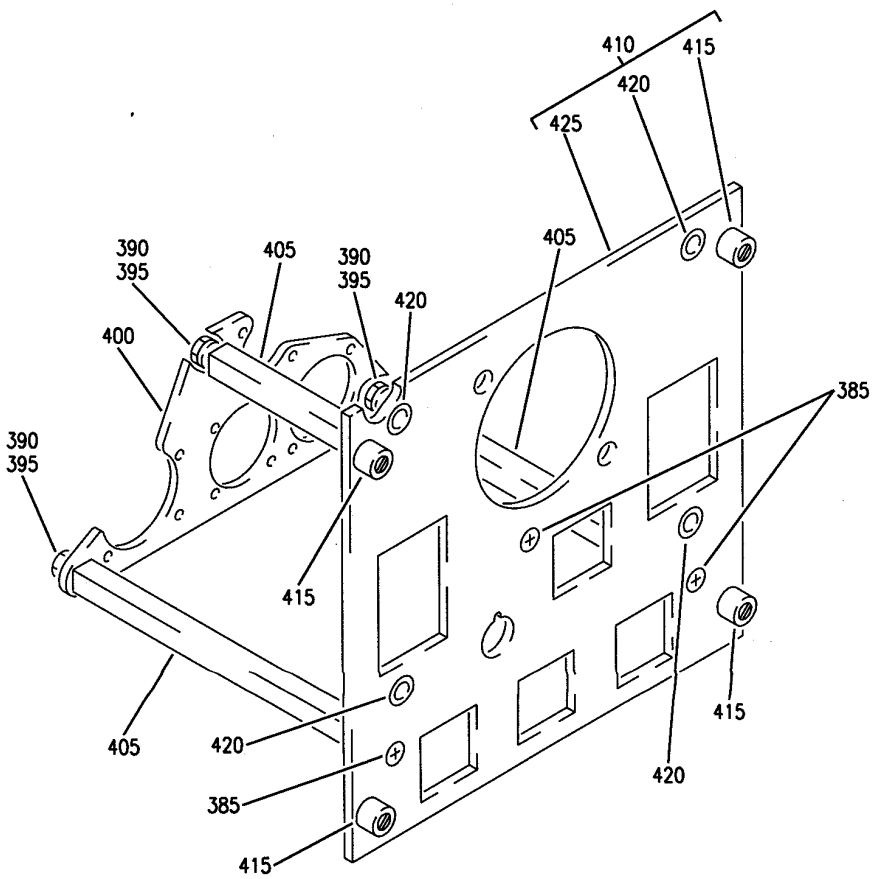

G

Y 31121105A SHT 6 REV 213

PANEL INSTL-P5 OVHD (INDICATING/RECORDING SYSTEMS ONLY)
FIGURE 5A (SHEET 6)

BOEING PROPRIETARY - Copyright © - Unpublished Work - See title page for details.

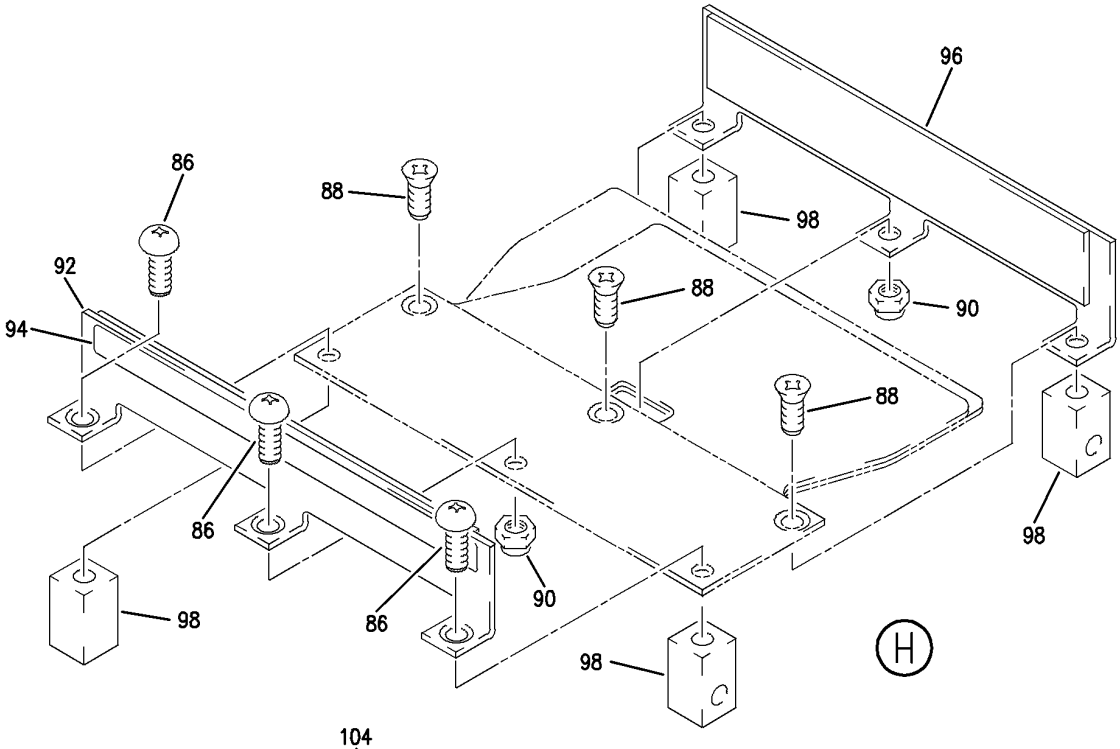

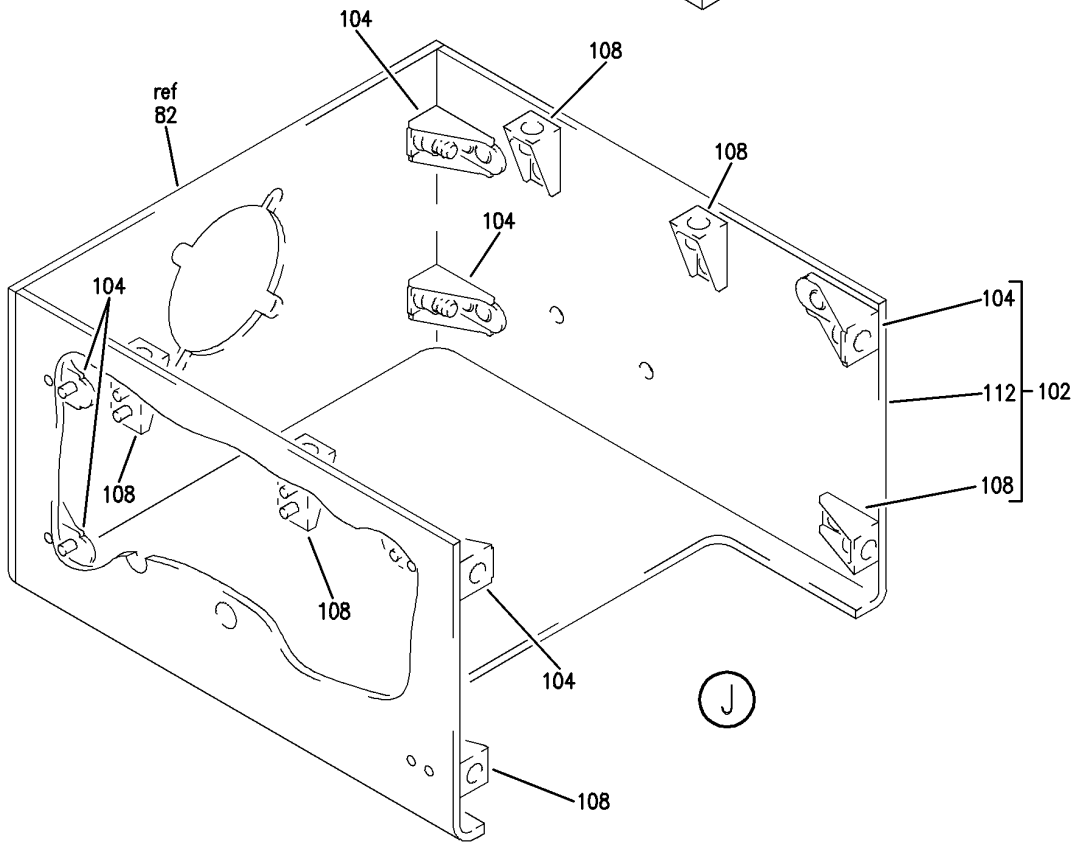

Y 31121105A SHT 7 REV 238

PANEL INSTL-P5 OVHD (INDICATING/RECORDING SYSTEMS ONLY)
FIGURE 5A (SHEET 7)

BOEING PROPRIETARY - Copyright © - Unpublished Work - See title page for details.

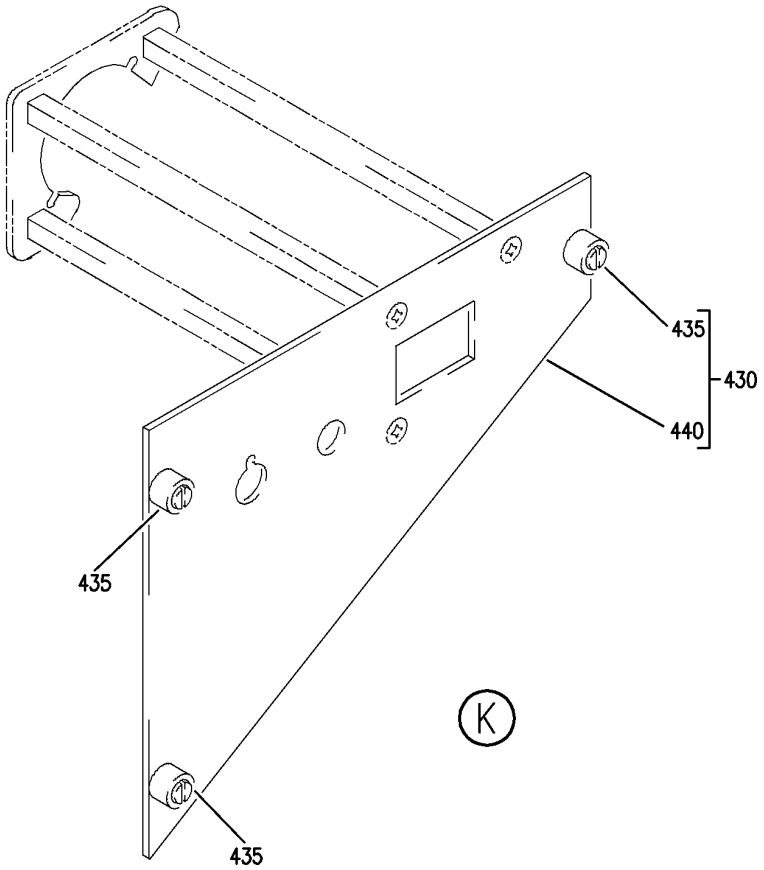

Y 31121105A SHT 8 REV 238

PANEL INSTL-P5 OVHD (INDICATING/RECORDING SYSTEMS ONLY)
FIGURE 5A (SHEET 8)

BOEING PROPRIETARY - Copyright © - Unpublished Work - See title page for details.

FIG ITEM	PART NUMBER	1 2 3 4 5 6 7 NOMENCLATURE	EFFECT FROM TO	UNITS PER ASSY
5A				
		PANEL INSTL-P5 OVHD (INDICATING/RECORDING SYSTEMS ONLY)	107107	
- 1	233N3101-1	PANEL INSTL-P5 OVHD (INDICATING/RECORDING SYSTEMS ONLY) VARIABLE DRAWING REF: 233N3101-5005 FOR NHA/OTHER SYS DET SEE: 25-10-00-05A	107107	RF
5	BACP10U0262T	.PANEL	107107	1
10	233N3212-10	.PANEL ASSY-WINDOW HEAT SUPPLIER CODE: V89954 ELECTRICAL EQUIP NUMBER: M10395 COMPONENT MAINT MANUAL REF: 30-41-71 QUALIFIED I/W DATA: 233N3212-8 -10 -11 -12 -13 ARE ALL INTERCHANGEABLE EXCEPT SUBJECT TO CUSTOMER PREFERENCE FOR OTHER SYS DETAILS SEE: 30-41-51-01 33-13-01-70	107107	1
15	NAS514P632-5	..SCREW	107107	3
20	BACS12CB06-5	..SCREW-	107107	3
25	MS35338-41	..WASHER-	107107	3
30	233N3250-11	..BRACKET-CONN.	107107	1
35	69B46200-12	..STANDOFF	107107	3
40	233N3212-2	..BASEPLATE ASSY- SUPPLIER CODE: V89954	107107	1
45	PFSC35-38ASEMB	...STUD ASSY- SUPPLIER CODE: V72794 SPECIFICATION NUMBER: BACS21DX1B	107107	4
50	SF6G6CBB5D	...NUT SUPPLIER CODE: V12324 SPECIFICATION NUMBER: BACN10PA06-6	107107	2
55	233N3212-3	...BASEPLATE- SUPPLIER CODE: V89954	107107	1

MISSING ITEM NUMBERS NOT APPLICABLE

- ITEM NOT ILLUSTRATED

BOEING PROPRIETARY - Copyright © - Unpublished Work - See title page for details.

FIG ITEM	PART NUMBER	1 2 3 4 5 6 7 NOMENCLATURE	EFFECT FROM TO	UNITS PER ASSY
5A				
70	285T0024-25	.MODULE ASSY-PILOTS CALL PNL SUPPLIER CODE: V89954 ELECTRICAL EQUIP NUMBER: M00051 COMPONENT MAINT MANUAL REF: 23-42-59 FOR OTHER SYS DETAILS SEE: 11-31-10-01 23-42-02-01 33-13-01-70	107107	1
72	BAC27TEX0933	..MARKER-ALUMINUM FOIL SUPPLIER CODE: V89954	107107	1
74	NAS514P632-5	..SCREW	107107	2
76	NAS514P440-5	..SCREW	107107	2
78	285T0158-29	..COVER ASSY- SUPPLIER CODE: V89954 ATTACHING PARTS	107107	1
- 80	NAS514P440-5	..SCREW -------*-------	107107	4
82	285T0158-7	..PANEL- SUPPLIER CODE: V89954 ATTACHING PARTS	107107	1
- 84	NAS1801-06-5	..SCREW -------*-------	107107	4
86	MS35214-13	..SCREW	107107	3
88	NAS514P440-5	..SCREW	107107	3
90	92-1660-40	..NUT SUPPLIER CODE: V72962 SPECIFICATION NUMBER: BACN10DN40 OPTIONAL PART: 92-1660-440 V15653	107107	2
92	285T0158-25	..BRACKET ASSY- SUPPLIER CODE: V89954	107107	1
94	BAC27TEX1986	...DECAL- SUPPLIER CODE: V89954	107107	1
96	285T0158-27	..BRACKET ASSY- SUPPLIER CODE: V89954	107107	1

MISSING ITEM NUMBERS NOT APPLICABLE

- ITEM NOT ILLUSTRATED

BOEING PROPRIETARY - Copyright © - Unpublished Work - See title page for details.

FIG ITEM	PART NUMBER	1 2 3 4 5 6 7 NOMENCLATURE	EFFECT FROM TO	UNITS PER ASSY
5A				
98	285T0158-21	..BLOCK-MTG	107107	4
		SUPPLIER CODE:		
		V89954		
		ATTACHING PARTS		
- 100	NAS514P440-5	..SCREW	107107	4
		-------*-------		
102	285T0158-23	..BRACKET ASSY-	107107	1
		SUPPLIER CODE:		
		V89954		
104	MF6000-06	...NUTPLATE	107107	6
		SUPPLIER CODE:		
		V15653		
		SPECIFICATION NUMBER:		
		BACN10KJ06		
		ATTACHING PARTS		
- 106	BACR15BA3AD	...RIVET-	107107	12
		SIZE DETERMINED ON INSTL.		
		-------*-------		
108	F22A27M22-40	...NUT-	107107	6
		SUPPLIER CODE:		
		V0217B		
		ATTACHING PARTS		
- 110	BACR15BA2AD	...RIVET-	107107	12
		SIZE DETERMINED ON INSTL.		
		-------*-------		
112	285T0158-22	...BRACKET-	107107	1
		SUPPLIER CODE:		
		V89954		
115	285T0157-5	..PANEL ASSY-	107107	1
		SUPPLIER CODE:		
		V89954		
125	PFSC35-38ASEMB	...STUD ASSY	107107	4
		SUPPLIER CODE:		
		V72794		
		SPECIFICATION NUMBER:		
		BACS21DX1B		
130	SF6G6CBB5D	...NUT	107107	2
		SUPPLIER CODE:		
		V12324		
		SPECIFICATION NUMBER:		
		BACN10PA06-6		
135	285T0157-12	...PANEL-	107107	1
		SUPPLIER CODE:		
		V89954		

MISSING ITEM NUMBERS NOT APPLICABLE

- ITEM NOT ILLUSTRATED

BOEING PROPRIETARY - Copyright © - Unpublished Work - See title page for details.

FIG ITEM	PART NUMBER	1 2 3 4 5 6 7 NOMENCLATURE	EFFECT FROM TO	UNITS PER ASSY
5A				
145	233T3216-10	.PANEL ASSY-CASS. SIGN CONT SUPPLIER CODE: V89954 ELECTRICAL EQUIP NUMBER: M00052 FOR OTHER SYS DETAILS SEE: 33-13-01-70 33-24-51-01	107107	1
150	NAS514P632-5	..SCREW	107107	3
155	NAS1801-06-05	..SCREW	107107	3
158	MS35338-41	..WASHER	107107	3
165	233T6200-85	..BRACKET-SPRT	107107	1
170	69B46200-9	..STANDOFF-	107107	3
175	233T3216-2	..BASEPLATE ASSY- SUPPLIER CODE: V89954	107107	1
180	BACS21DD1B	...STUD ASSY SUPPLIER CODE: V08524 SPECIFICATION NUMBER: BACS21DD1B	107107	4
185	SF6G6CBB5D	...NUT SUPPLIER CODE: V12324 SPECIFICATION NUMBER: BACN10PA06-6	107107	3
190	233T3216-3	...BASEPLATE- SUPPLIER CODE: V89954	107107	1
200	130502-5	.PANEL ASSY-CAB. ALTITUDE CONT SUPPLIER CODE: V64547 SPECIFICATION NUMBER: S210T160-52 ELECTRICAL EQUIP NUMBER: M00013 COMPONENT MAINT MANUAL REF: 21-31-50 OPTIONAL PART: 130502-4 V64547 FOR BREAKDOWN SEE: 21-31-01-01	107107	RF

MISSING ITEM NUMBERS NOT APPLICABLE

– ITEM NOT ILLUSTRATED

BOEING PROPRIETARY - Copyright © - Unpublished Work - See title page for details.

FIG ITEM	PART NUMBER	1 2 3 4 5 6 7 NOMENCLATURE	EFFECT FROM TO	UNITS PER ASSY
5A				
200	130502-4	.PANEL ASSY-CAB. ALTITUDE CONT SUPPLIER CODE: V64547 SPECIFICATION NUMBER: S210T160-42 ELECTRICAL EQUIP NUMBER: M00013 COMPONENT MAINT MANUAL REF: 21-31-50 OPTIONAL PART: 130502-5 V64547 FOR BREAKDOWN SEE: 21-31-01-01	107107	RF
200	130502-6	.PANEL ASSY-CAB. ALTITUDE CONT SUPPLIER CODE: V64547 SPECIFICATION NUMBER: S210T160-62 ELECTRICAL EQUIP NUMBER: M00013 COMPONENT MAINT MANUAL REF: 21-31-50 FOR BREAKDOWN SEE: 21-31-01-01	107107	RF
200	130502-7	.PANEL ASSY-CAB. ALTITUDE CONT SUPPLIER CODE: V64547 FUNCTIONAL DESCRIPTION: SELECTOR CONTAINS CONTROLS AND CIRCUITRY NECESSARY FOR AUTOMATIC OR MANUAL PRESSURE SELECTION SPECIFICATION NUMBER: S210T160-72 ELECTRICAL EQUIP NUMBER: M00013 COMPONENT MAINT MANUAL REF: 21-31-50 FOR BREAKDOWN SEE: 21-31-01-01	107107	RF

MISSING ITEM NUMBERS NOT APPLICABLE

– ITEM NOT ILLUSTRATED

BOEING PROPRIETARY - Copyright © - Unpublished Work - See title page for details.

FIG ITEM	PART NUMBER	1 2 3 4 5 6 7 NOMENCLATURE	EFFECT FROM TO	UNITS PER ASSY
5A				
205	SETL0C420L	.PANEL ASSY-CAB. PRESSURE GAUGES SUPPLIER CODE: V61349 SPECIFICATION NUMBER: S231N210-15 ELECTRICAL EQUIP NUMBER: M00019 COMPONENT MAINT MANUAL REF: 21-33-07 QUALIFIED I/W DATA: INSTALLED AS A SET, PT033D T/W SETL0C420M OR SETL0C420L, I/W PT033A T/W SETL0C420H FOR BREAKDOWN SEE: 21-33-51-01	107107	RF
210	233N3203-27	.PANEL ASSY-EQPT COOLING SUPPLIER CODE: V89954 ELECTRICAL EQUIP NUMBER: M10067 COMPONENT MAINT MANUAL REF: 21-58-71 QUALIFIED I/W DATA: 233N3203-26 -27 -32 -33 -34 ARE ALL INTERCHANGEABLE EXCEPT SUBJECT TO CUSTOMER PREFERENCE PRE ALERT SB: 33A0044 FOR OTHER SYS DETAILS SEE: 21-33-51-01 21-58-19-11 33-13-01-70	107107	1
210	233N3203-1027	.PANEL ASSY-EQPT COOLING SUPPLIER CODE: V89954 ELECTRICAL EQUIP NUMBER: M10067 COMPONENT MAINT MANUAL REF: 21-58-71 POST ALERT SB: 33A0044 FOR OTHER SYS DETAILS SEE: 21-33-51-01 21-58-19-11 33-13-01-70	107107	1

MISSING ITEM NUMBERS NOT APPLICABLE

– ITEM NOT ILLUSTRATED

BOEING PROPRIETARY - Copyright © - Unpublished Work - See title page for details.

FIG ITEM	PART NUMBER	1 2 3 4 5 6 7 NOMENCLATURE	EFFECT FROM TO	UNITS PER ASSY
5A				
215	NAS514P632-6	..SCREW	107107	3
220	BACS12CB06-5	..SCREW	107107	3
225	MS35338-41	..WASHER-	107107	3
230	233N3250-10	..BRACKET-CONN.	107107	1
235	69B46200-11	..STANDOFF	107107	3
240	233N3203-19	..BASEPLATE ASSY-	107107	1
		SUPPLIER CODE:		
		V89954		
245	PFSC35-38ASEMB	...STUD ASSY-	107107	4
		SUPPLIER CODE:		
		V72794		
		SPECIFICATION NUMBER:		
		BACS21DX1B		
250	SF6G6CBB5D	...NUT	107107	2
		SUPPLIER CODE:		
		V12324		
		SPECIFICATION NUMBER:		
		BACN10PA06-6		
255	233N3203-21	...BASEPLATE-	107107	1
		SUPPLIER CODE:		
		V89954		
260	BACP10U0112T	.PANEL ASSY	107107	1
265	233N3221-83	.PANEL ASSY-LIGHTING CONT	107107	1
		SUPPLIER CODE:		
		V89954		
		POSITION DATA:		
		R		
		ELECTRICAL EQUIP NUMBER:		
		M10057		
		COMPONENT MAINT MANUAL REF:		
		33-11-72		
		FOR OTHER SYS DETAILS SEE:		
		33-11-51-14		
		33-13-01-70		
		33-13-02-01		
		33-45-53-01		
		33-16-51-01		
		52-51-51-01		
270	NAS514P632-5	..SCREW	107107	3
275	NAS1801-06-5	..SCREW-	107107	3
		USED ON:		
		233N3221-83		
280	MS35338-41	..WASHER-	107107	3
285	233N3250-48	..BRACKET	107107	1

MISSING ITEM NUMBERS NOT APPLICABLE

— ITEM NOT ILLUSTRATED

BOEING PROPRIETARY - Copyright © - Unpublished Work - See title page for details.

FIG ITEM	PART NUMBER	1 2 3 4 5 6 7 NOMENCLATURE	EFFECT FROM TO	UNITS PER ASSY
5A				
290	69B46200-10	..STANDOFF-	107107	3
		USED ON:		
		233N3221-38		
		233N3221-45		
		233N3221-57		
		233N3221-61		
		233N3221-83		
295	65B40112-12	..SPACER-	107107	1
		OPTIONAL PART:		
		233N3221-42		
		V89954		
295	233N3221-42	..SPACER-	107107	1
		SUPPLIER CODE:		
		V89954		
		OPTIONAL PART:		
		65B40112-12		
300	233N3221-33	..BASEPLATE ASSY-	107107	1
		SUPPLIER CODE:		
		V89954		
305	BACS21DD1B	...STUD ASSY-	107107	4
		SUPPLIER CODE:		
		V08524		
		SPECIFICATION NUMBER:		
		BACS21DD1B		
		OPTIONAL PART:		
		BACS21DX1B		
305	PFSC35-38ASEMB	...STUD ASSY-	107107	4
		SUPPLIER CODE:		
		V72794		
		SPECIFICATION NUMBER:		
		BACS21DX1B		
		OPTIONAL PART:		
		BACS21DD1B		
310	SF6G6CBB5D	...NUT	107107	4
		SUPPLIER CODE:		
		V12324		
		SPECIFICATION NUMBER:		
		BACN10PA06-6		
315	233N3221-37	...BASEPLATE-	107107	1
		SUPPLIER CODE:		
		V89954		
320	BACP10U030OT	.PANEL ASSY	107107	1

MISSING ITEM NUMBERS NOT APPLICABLE

– ITEM NOT ILLUSTRATED

BOEING PROPRIETARY - Copyright © - Unpublished Work - See title page for details.

FIG ITEM	PART NUMBER	1 2 3 4 5 6 7 NOMENCLATURE	EFFECT FROM TO	UNITS PER ASSY
5A				
325	20-210-01	.INDICATOR ASSY-COMPT TEMP SUPPLIER CODE: V35012 SPECIFICATION NUMBER: S231N211-2 ELECTRICAL EQUIP NUMBER: M10078 COMPONENT MAINT MANUAL REF: 21-65-01 FOR BREAKDOWN SEE: 21-65-51-01	107107	RF
325	2263-01-1	.INDICATOR ASSY-COMPT TEMP SUPPLIER CODE: V52013 FUNCTIONAL DESCRIPTION: INDICATOR SHOWS COMPARTMENT TEMPERATURE FOR EACH OF THE THREE CABIN ZONES SPECIFICATION NUMBER: S231N211-3 ELECTRICAL EQUIP NUMBER: M10078 COMPONENT MAINT MANUAL REF: 21-61-02 FOR BREAKDOWN SEE: 21-65-51-01	107107	RF
330	233N3217-11	.PANEL ASSY-AIR CONDITIONING CONT SUPPLIER CODE: V89954 ELECTRICAL EQUIP NUMBER: M10193 COMPONENT MAINT MANUAL REF: 21-51-71 QUALIFIED I/W DATA: 233N3217-8 -11 -15 -16 -17 ARE ALL INTERCHANGEABLE EXCEPT SUBJECT TO CUSTOMER PREFERENCE FOR OTHER SYS DETAILS SEE: 21-25-55-01 21-61-04-01 21-61-04-01 33-13-01-70	107107	1
335	NAS514P632-5	..SCREW	107107	3
340	BACS12CB06-5	..SCREW	107107	3
345	MS35338-41	..WASHER-	107107	3

MISSING ITEM NUMBERS NOT APPLICABLE

– ITEM NOT ILLUSTRATED

BOEING PROPRIETARY - Copyright © - Unpublished Work - See title page for details.

FIG ITEM	PART NUMBER	1 2 3 4 5 6 7 NOMENCLATURE	EFFECT FROM TO	UNITS PER ASSY
5A				
350	233N3250-13	..BRACKET-CONN.	107107	1
355	69B46200-14	..STANDOFF	107107	3
360	233N3217-2	..BASEPLATE ASSY-	107107	1
		SUPPLIER CODE:		
		V89954		
		OPTIONAL PART:		
		233N3217-9		
		V89954		
360	233N3217-9	..BASEPLATE ASSY-	107107	1
		SUPPLIER CODE:		
		V89954		
		OPTIONAL PART:		
		233N3217-2		
		V89954		
		USED ON:		
		233N3217-11		
365	PFSC35-38ASEMB	...STUD ASSY-	107107	6
		SUPPLIER CODE:		
		V72794		
		SPECIFICATION NUMBER:		
		BACS21DX1B		
370	SF6G6CBB5D	...NUT	107107	5
		SUPPLIER CODE:		
		V12324		
		SPECIFICATION NUMBER:		
		BACN10PA06-6		
375	233N3217-3	...BASEPLATE-	107107	1
		SUPPLIER CODE:		
		V89954		
		USED ON:		
		233N3217-2		
375	233N3217-10	...BASEPLATE-	107107	1
		SUPPLIER CODE:		
		V89954		
		USED ON:		
		233N3217-9		

MISSING ITEM NUMBERS NOT APPLICABLE

– ITEM NOT ILLUSTRATED

BOEING PROPRIETARY - Copyright © - Unpublished Work - See title page for details.

FIG ITEM	PART NUMBER	1 2 3 4 5 6 7 NOMENCLATURE	EFFECT FROM TO	UNITS PER ASSY
5A				
380	233N3215-15	.PANEL ASSY-BLEED AIR SUPPLIER CODE: V89954 ELECTRICAL EQUIP NUMBER: M10259 COMPONENT MAINT MANUAL REF: 36-11-71 QUALIFIED I/W DATA: 233N3215-9 -15 -19 -20 ARE ALL INTERCHANGEABLE EXCEPT SUBJECT TO CUSTOMER PREFERENCE PRE ALERT SB: 33A0044 FOR OTHER SYS DETAILS SEE: 26-18-51-02 33-13-01-70 36-11-04-02 36-21-00-02 36-21-02-03 36-22-51-01 49-52-00-02 75-32-00-02	107107	1
380	233N3215-1015	.PANEL ASSY-BLEED AIR SUPPLIER CODE: V89954 ELECTRICAL EQUIP NUMBER: M10259 COMPONENT MAINT MANUAL REF: 36-11-71 QUALIFIED I/W DATA: 233N3215-1009,-1015, -1019 AND -1020 ARE INTERCHANGEABLE PER CUSTOMER PREFERENCE. POST ALERT SB: 33A0044 FOR OTHER SYS DETAILS SEE: 26-18-51-02 33-13-01-70 36-11-04-02 36-21-00-02 36-21-02-03 36-22-51-01 49-52-00-02 75-32-00-02	107107	1
385	NAS514P632-5	..SCREW	107107	3
390	BACS12CB06-5	..SCREW	107107	3
395	MS35338-41	..WASHER	107107	3

MISSING ITEM NUMBERS NOT APPLICABLE

— ITEM NOT ILLUSTRATED

BOEING PROPRIETARY - Copyright © - Unpublished Work - See title page for details.

FIG ITEM	PART NUMBER	1 2 3 4 5 6 7 NOMENCLATURE	EFFECT FROM TO	UNITS PER ASSY
5A				
400	233N3250-39	..BRACKET-SPRT	107107	1
405	69B46200-11	..STANDOFF	107107	3
410	233N3215-10	..BASEPLATE ASSY-	107107	1
		SUPPLIER CODE:		
		V89954		
415	PFSC35-38ASEMB	...STUD ASSY-	107107	4
		SUPPLIER CODE:		
		V72794		
		SPECIFICATION NUMBER:		
		BACS21DX1B		
420	SF6G6CBB5D	...NUT	107107	4
		SUPPLIER CODE:		
		V12324		
		SPECIFICATION NUMBER:		
		BACN10PA06-6		
425	233N3215-11	...BASEPLATE-	107107	1
		SUPPLIER CODE:		
		V89954		
430	233T3200-1	.PANEL ASSY	107107	1
435	BACS21DD1B	..STUD ASSY	107107	3
		SUPPLIER CODE:		
		V08524		
		SPECIFICATION NUMBER:		
		BACS21DD1B		
440	233T3200-3	..BASEPLATE	107107	1

MISSING ITEM NUMBERS NOT APPLICABLE

– ITEM NOT ILLUSTRATED

BOEING PROPRIETARY - Copyright © - Unpublished Work - See title page for details.

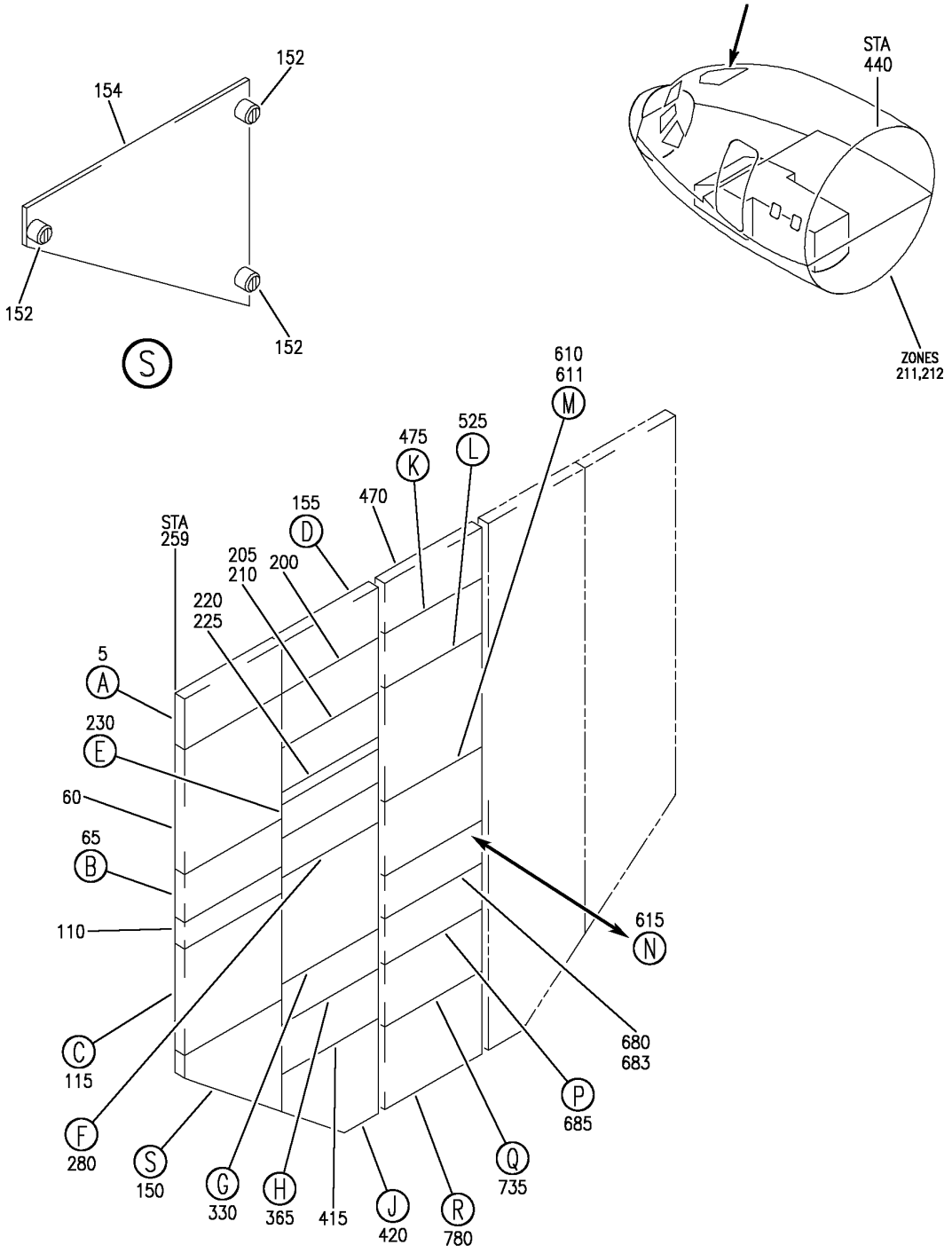

PANEL INSTL-P5 OVHD (INDICATING/RECORDING SYSTEMS ONLY)
FIGURE 7 (SHEET 1)

BOEING PROPRIETARY - Copyright © - Unpublished Work - See title page for details.

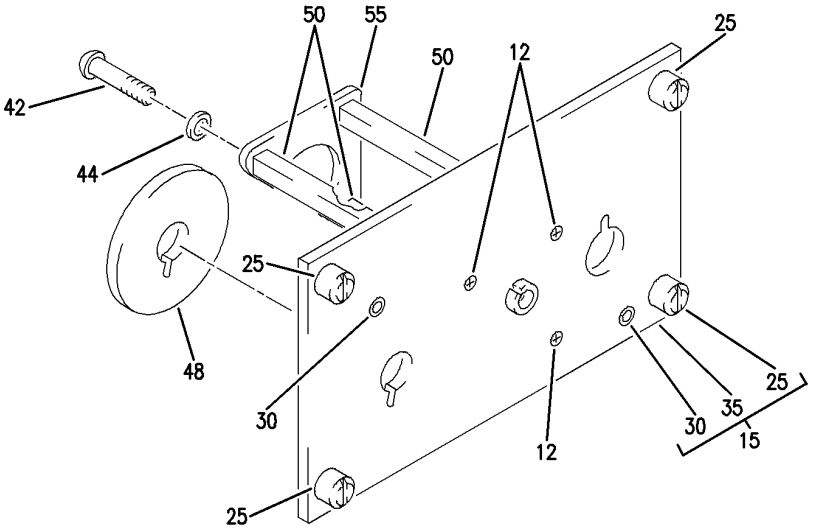

A

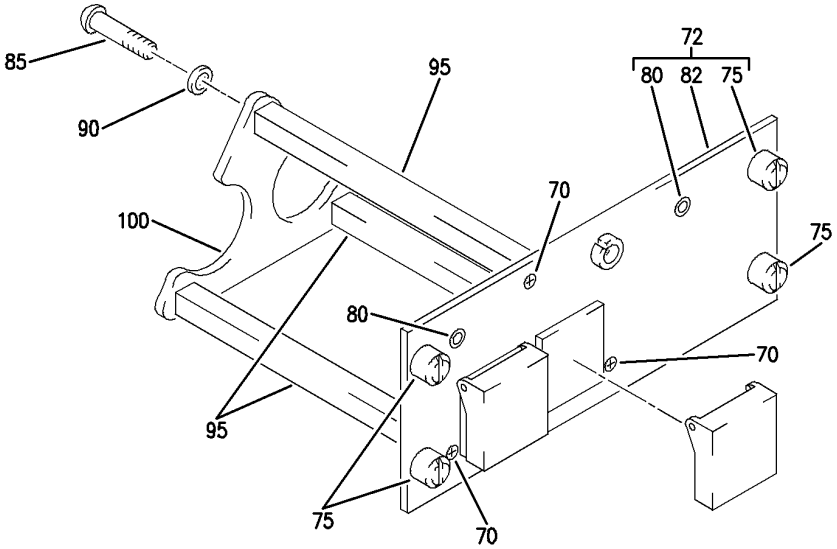

B

Y 31121107 SHT 2 REV 244

PANEL INSTL-P5 OVHD (INDICATING/RECORDING SYSTEMS ONLY)
FIGURE 7 (SHEET 2)

BOEING PROPRIETARY - Copyright © - Unpublished Work - See title page for details.

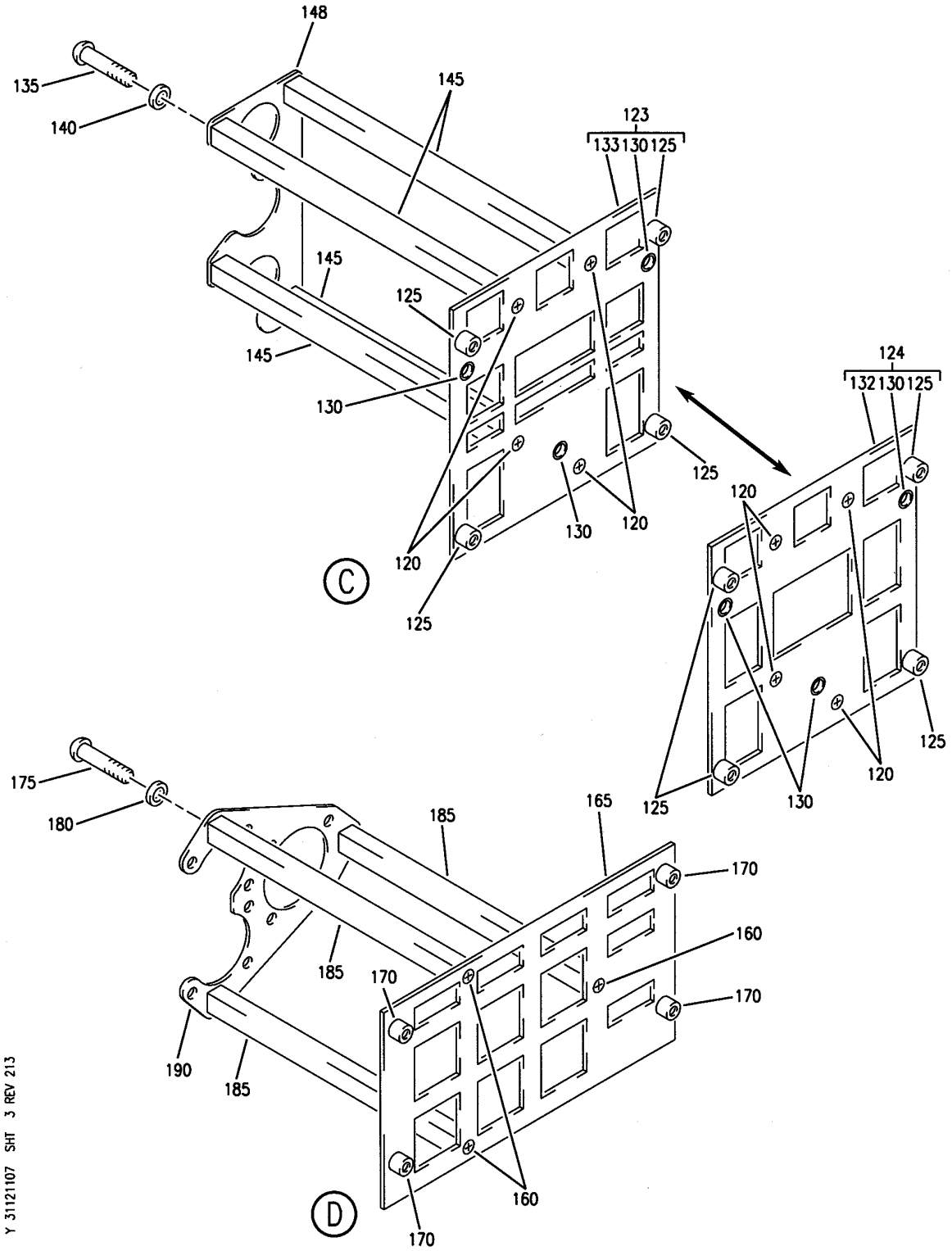

PANEL INSTL-P5 OVHD (INDICATING/RECORDING SYSTEMS ONLY)
FIGURE 7 (SHEET 3)

BOEING PROPRIETARY - Copyright © - Unpublished Work - See title page for details.

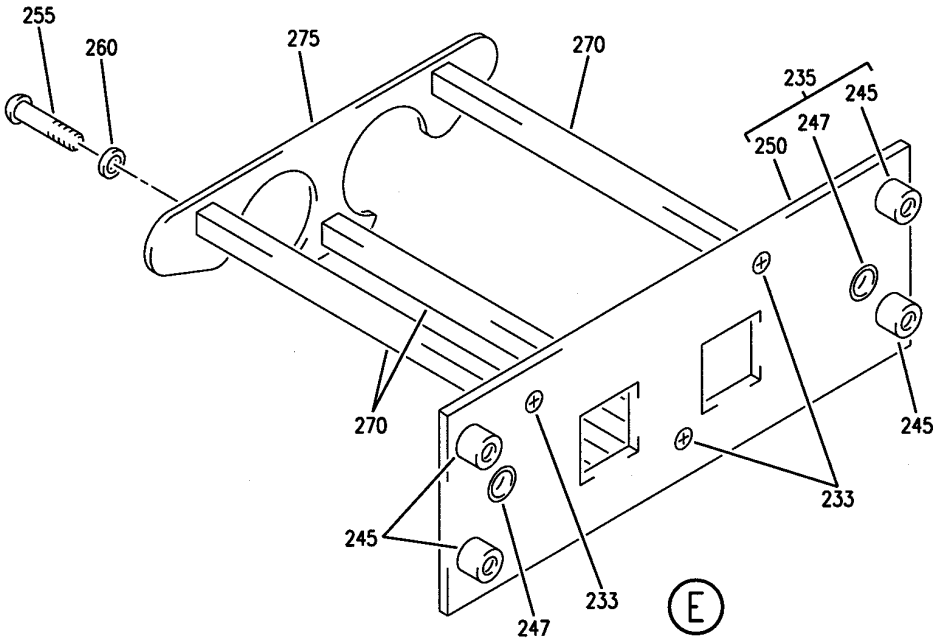

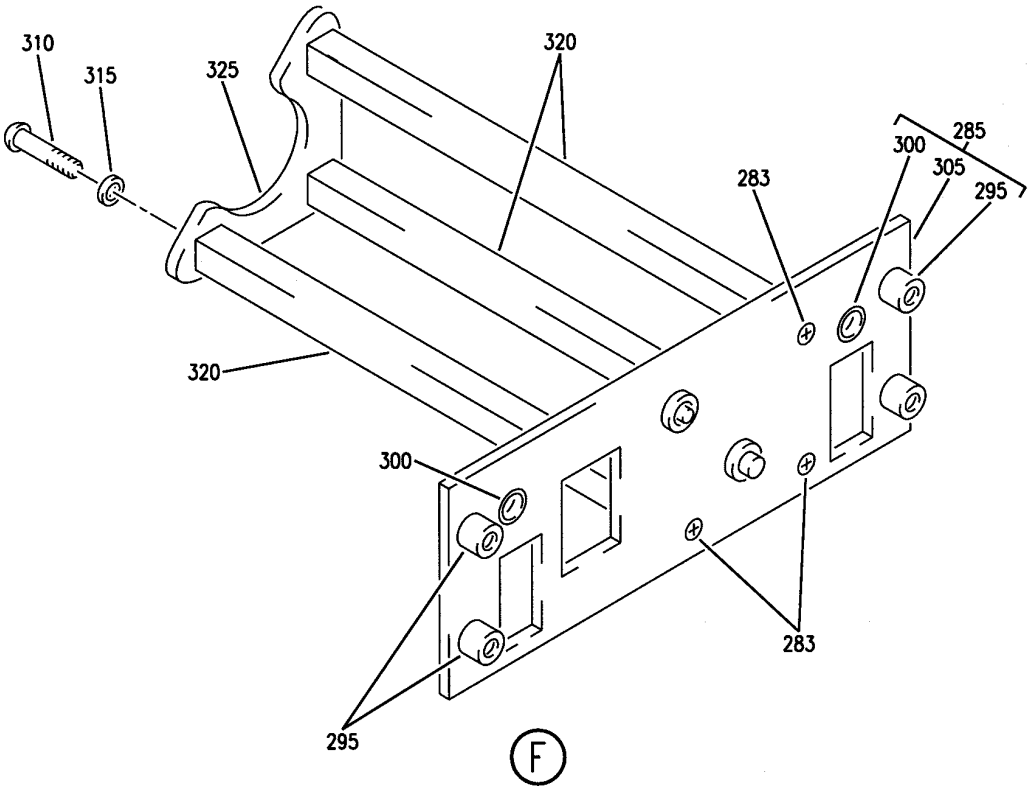

Y 31121107 SHT 4 REV 213

PANEL INSTL-P5 OVHD (INDICATING/RECORDING SYSTEMS ONLY)
FIGURE 7 (SHEET 4)

BOEING PROPRIETARY - Copyright © - Unpublished Work - See title page for details.

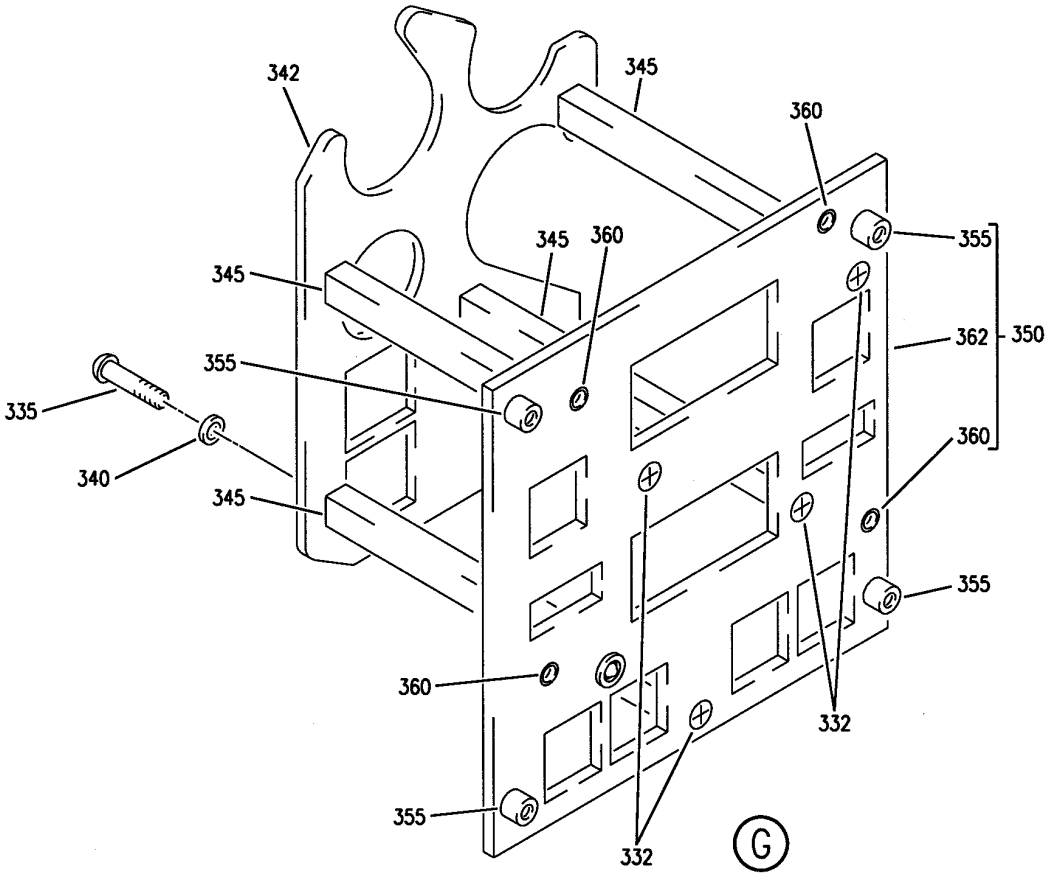

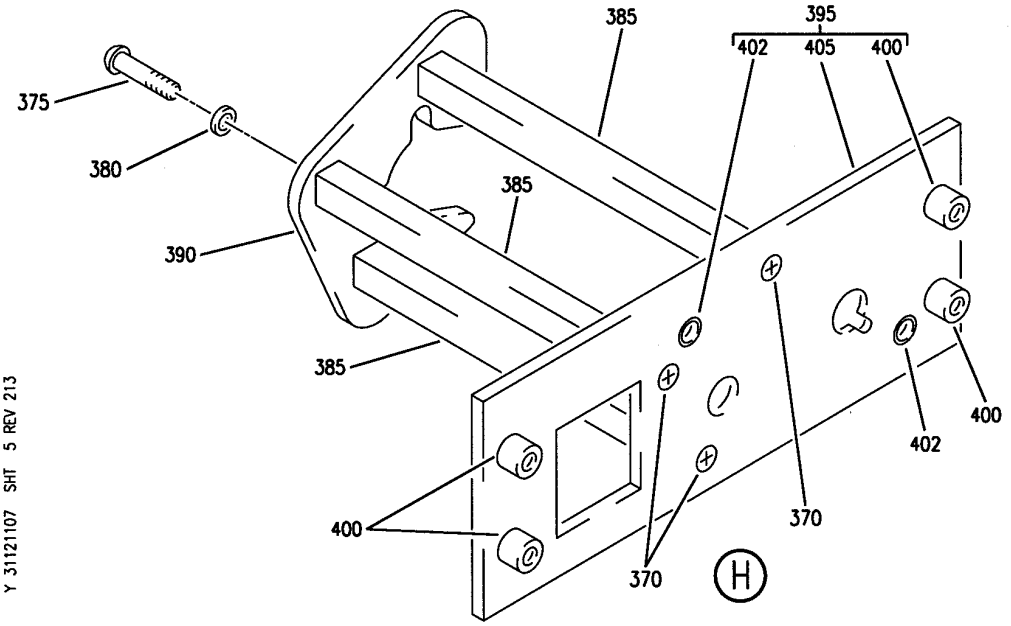

PANEL INSTL-P5 OVHD (INDICATING/RECORDING SYSTEMS ONLY)
FIGURE 7 (SHEET 5)

BOEING PROPRIETARY - Copyright © - Unpublished Work - See title page for details.

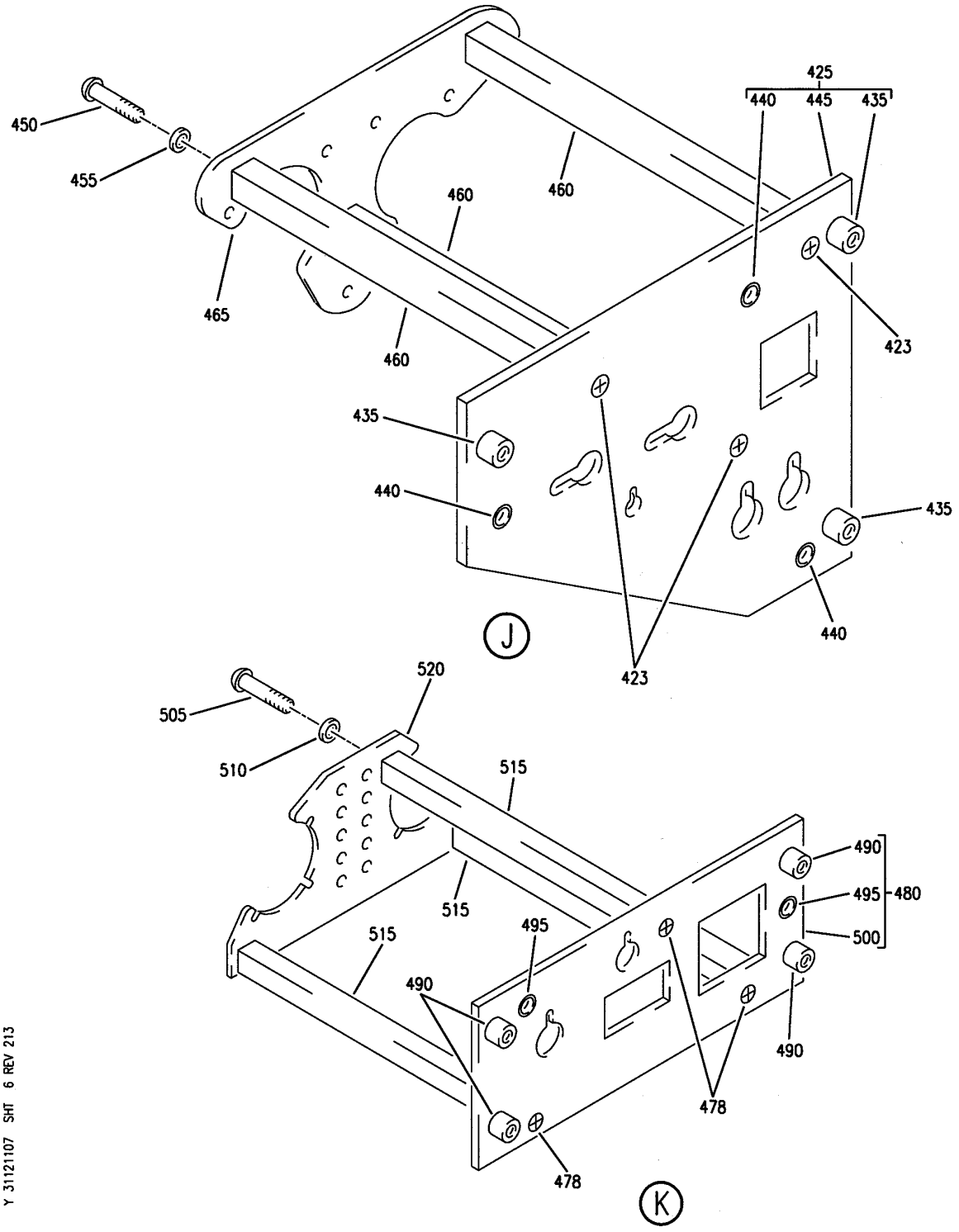

PANEL INSTL-P5 OVHD (INDICATING/RECORDING SYSTEMS ONLY)
FIGURE 7 (SHEET 6)

BOEING PROPRIETARY - Copyright © - Unpublished Work - See title page for details.

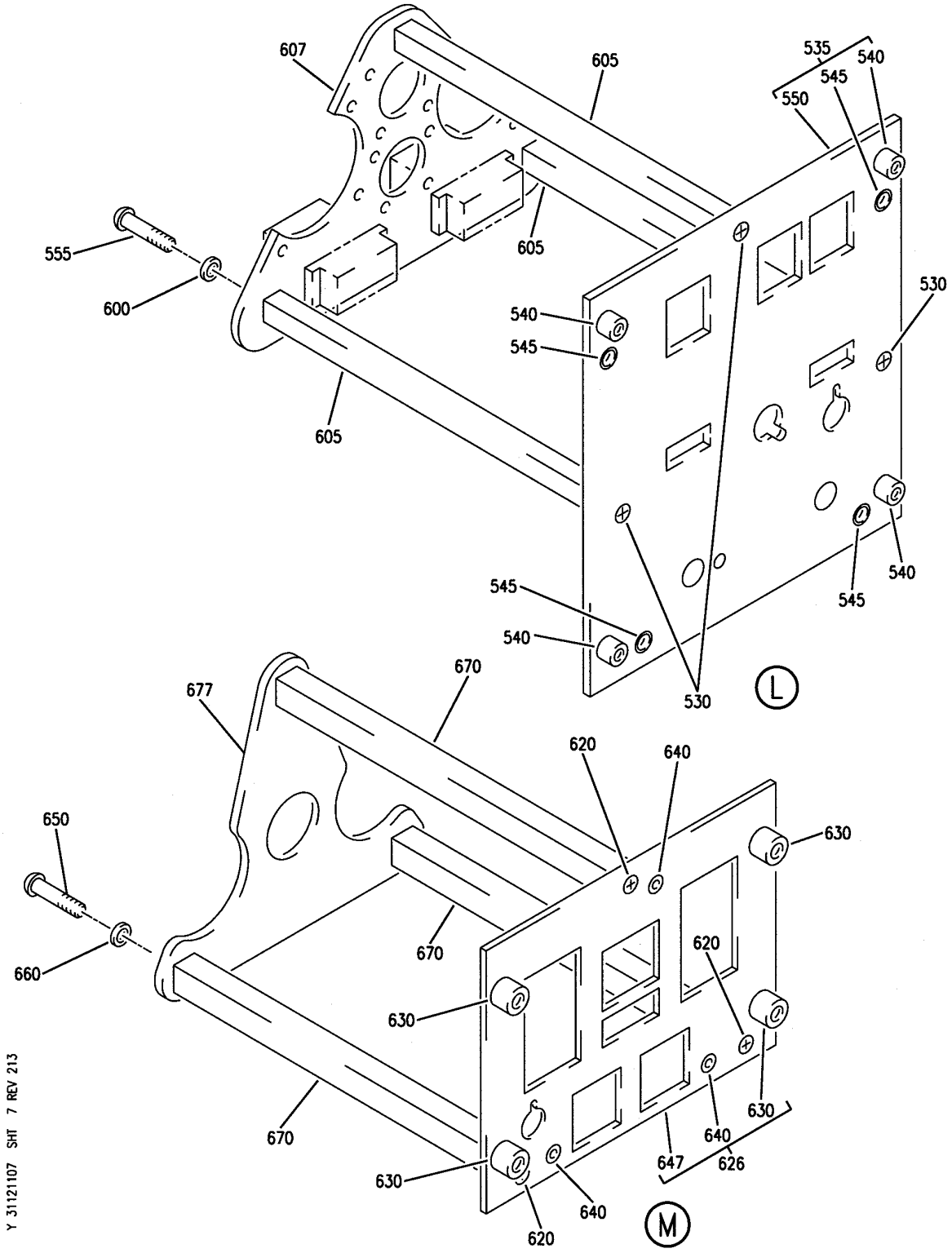

PANEL INSTL-P5 OVHD (INDICATING/RECORDING SYSTEMS ONLY)
FIGURE 7 (SHEET 7)

BOEING PROPRIETARY - Copyright © - Unpublished Work - See title page for details.

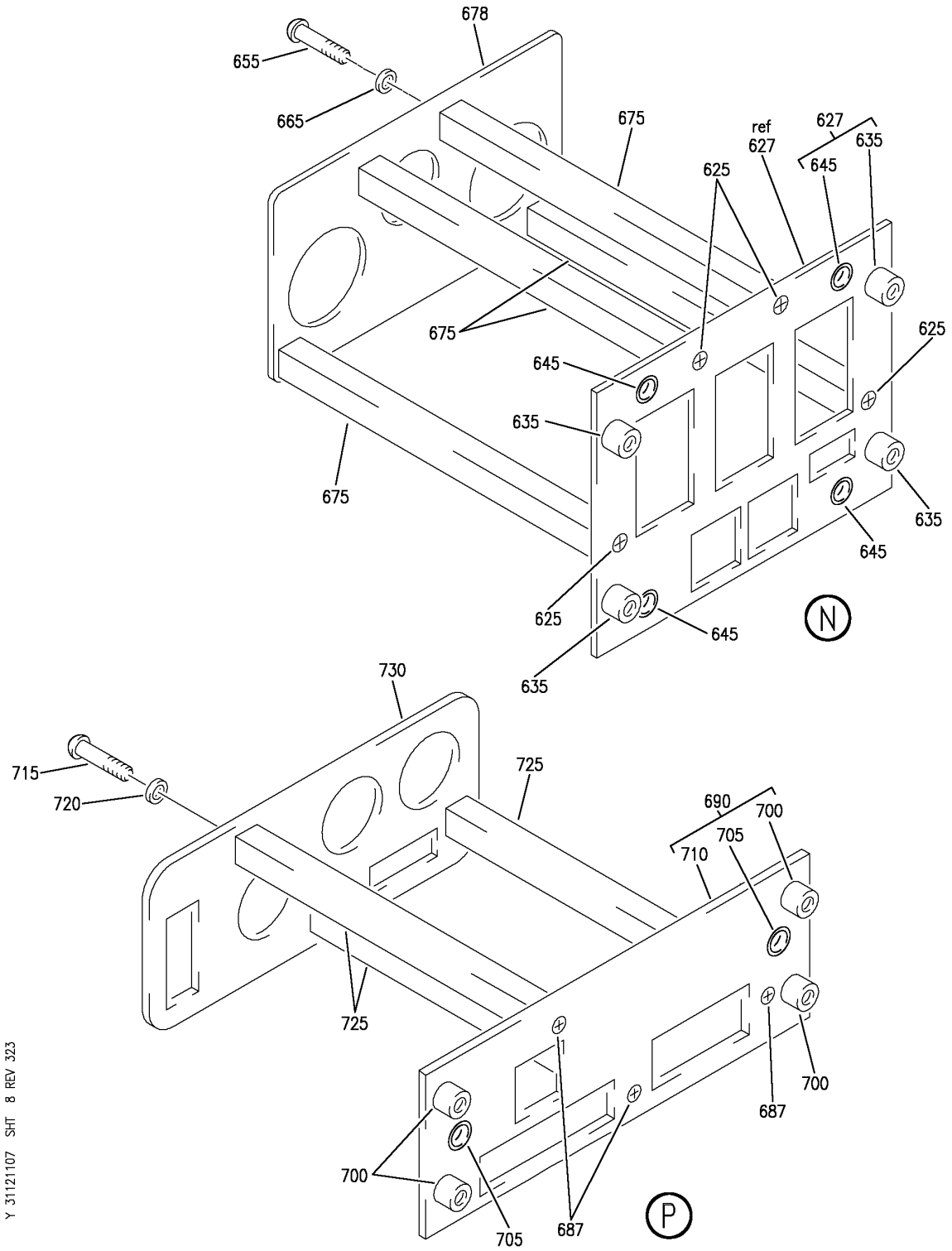

PANEL INSTL-P5 OVHD (INDICATING/RECORDING SYSTEMS ONLY)
FIGURE 7 (SHEET 8)

BOEING PROPRIETARY - Copyright © - Unpublished Work - See title page for details.

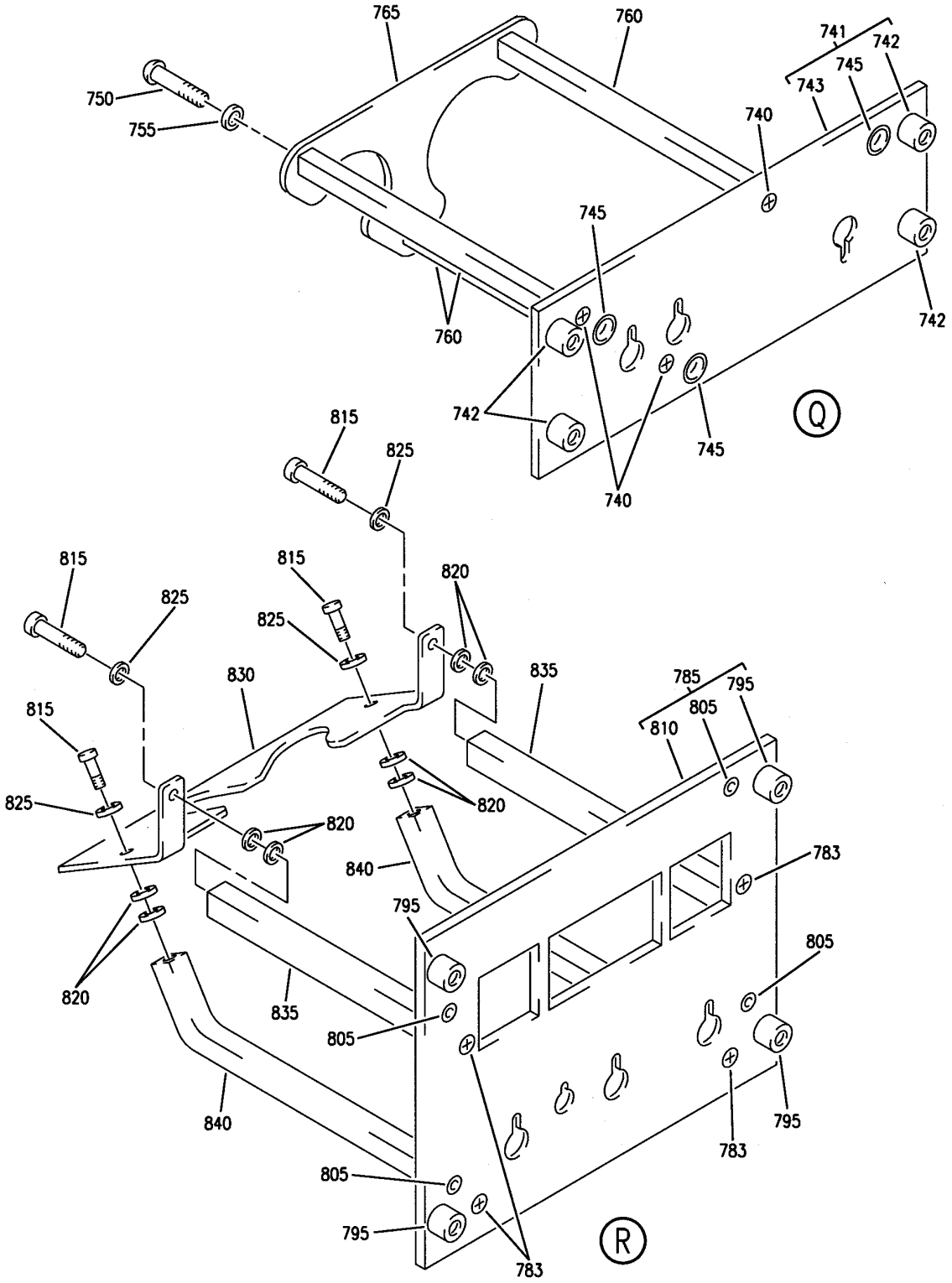

PANEL INSTL-P5 OVHD (INDICATING/RECORDING SYSTEMS ONLY)
FIGURE 7 (SHEET 9)

BOEING PROPRIETARY - Copyright © - Unpublished Work - See title page for details.

FIG ITEM	PART NUMBER	1 2 3 4 5 6 7 NOMENCLATURE	EFFECT FROM TO	UNITS PER ASSY
7				
		PANEL INSTL-P5 OVHD (INDICATING/RECORDING SYSTEMS ONLY)	121503 904949	
- 1	233N3101-1	PANEL INSTL-P5 OVHD (INDICATING/RECORDING SYSTEMS ONLY) VARIABLE DRAWING REF: 233N3101-5025 FOR NHA/OTHER SYS DET SEE: 25-10-00-05A	121503 904949	RF
5	233N3227-1	.PANEL ASSY-DOME LT OVERRIDE CAPT SUPPLIER CODE: V89954 ELECTRICAL EQUIP NUMBER: M10653 COMPONENT MAINT MANUAL REF: 33-11-14 FOR OTHER SYS DETAILS SEE: 33-11-51-14 33-13-01-70	121503 904949	1
5	233N3227-6	.PANEL ASSY-DOME LT OVERRIDE CAPT SUPPLIER CODE: V89954 ELECTRICAL EQUIP NUMBER: M10653 COMPONENT MAINT MANUAL REF: 33-11-14 QUALIFIED I/W DATA: THE 233N3227-300 PANEL ASSY IS I/W THE 233N3227-6 PANEL ASSY T/W THE S233T100-6051 LIGHTPLATE AND RD241-119 KNOB. FOR OTHER SYS DETAILS SEE: 33-11-51-14 33-13-01-70	121503 904949	1
12	NAS514P632-5	..SCREW	121503 904949	3
15	233N3227-2	..BASEPLATE ASSY- SUPPLIER CODE: V89954	121503 904949	1
25	BACS21DD1B	...STUD ASSY SUPPLIER CODE: V08524 SPECIFICATION NUMBER: BACS21DD1B	121503 904949	4

MISSING ITEM NUMBERS NOT APPLICABLE

- ITEM NOT ILLUSTRATED

BOEING PROPRIETARY - Copyright © - Unpublished Work - See title page for details.

FIG ITEM	PART NUMBER	1 2 3 4 5 6 7 NOMENCLATURE	EFFECT FROM TO	UNITS PER ASSY
7				
30	SF6G6CBB5D	...NUT SUPPLIER CODE: V12324 SPECIFICATION NUMBER: BACN10PA06-6	121503 904949	2
35	233N3227-3	...BASEPLATE- SUPPLIER CODE: V89954	121503 904949	1
42	BACS12CB06-5	..SCREW-	121503 904949	3
44	MS35338-41	..WASHER	121503 904949	3
48	233N3221-42	..SPACER- SUPPLIER CODE: V89954 OPTIONAL PART: 65B40112-12 USED ON: 233N3227-6	121503 904949	1
48	65B40112-12	..SPACER- OPTIONAL PART: 233N3221-42 V89954 USED ON: 233N3227-6	121503 904949	1
50	69B46200-5	..STANDOFF	121503 904949	3
55	233N3250-23	..BRACKET	121503 904949	1

MISSING ITEM NUMBERS NOT APPLICABLE

– ITEM NOT ILLUSTRATED

BOEING PROPRIETARY - Copyright © - Unpublished Work - See title page for details.

FIG ITEM	PART NUMBER	1 2 3 4 5 6 7 NOMENCLATURE	EFFECT FROM TO	UNITS PER ASSY
7				
60	CG1093AD01	.PANEL ASSY-IRS MODE SELECT SUPPLIER CODE: V94580 SPECIFICATION NUMBER: S242T101-203 COMPONENT MAINT MANUAL REF: 34-21-21 QUALIFIED I/W DATA: CG1093AD01 I/W CG1093AC01 EXCEPT CG1093AD01 DISPLAYS IRU MAINTENNANCE CODES AND THE TIME REMAINING IN ALIGNMENT CG1093AD01 I/W CG1093AD02 EXCEPT CG1093AD01 DISPLAYS IRU MAINTENANCE CODES AND THE TIME REMAINING IN ALIGNMENT OPTIONAL PART: CG1093AD02 V94580 FOR BREAKDOWN SEE: 34-21-02-01	121503 904949	RF
60	CG1093AD02	.PANEL ASSY-IRS MODE SELECT SUPPLIER CODE: V94580 SPECIFICATION NUMBER: S242T101-204 COMPONENT MAINT MANUAL REF: 34-21-21 QUALIFIED I/W DATA: CG1093AD01 I/W CG1093AD02 EXCEPT CG1093AD01 DISPLAYS IRU MAINTENANCE CODES AND THE TIME REMAINING IN ALIGNMENT OPTIONAL PART: CG1093AD01 V94580 FOR BREAKDOWN SEE: 34-21-02-01	121503 904949	RF

MISSING ITEM NUMBERS NOT APPLICABLE

– ITEM NOT ILLUSTRATED

BOEING PROPRIETARY - Copyright © - Unpublished Work - See title page for details.

FIG ITEM	PART NUMBER	1 2 3 4 5 6 7 NOMENCLATURE	EFFECT FROM TO	UNITS PER ASSY
7				
60	CG1093AC01	.PANEL ASSY-IRS MODE SELECT SUPPLIER CODE: V94580 SPECIFICATION NUMBER: S242T101-202 COMPONENT MAINT MANUAL REF: 34-21-08 QUALIFIED I/W DATA: CG1093AD01 I/W CG1093AC01 EXCEPT CG1093AD01 DISPLAYS IRU MAINTENANCE CODES AND THE TIME REMAINING IN ALIGNMENT FOR BREAKDOWN SEE: 34-21-02-01	121503 904949	RF
65	233N3216-22	.PANEL ASSY-YAW DAMPER SUPPLIER CODE: V89954 ELECTRICAL EQUIP NUMBER: M10250 COMPONENT MAINT MANUAL REF: 22-21-71 QUALIFIED I/W DATA: 233N3216-14 -18 -20 -21 -22 ARE ALL INTERCHANGEABLE EXCEPT SUBJECT TO CUSTOMER PREFERENCE PRE ALERT SB: 33A0044 FOR OTHER SYS DETAILS SEE: 22-21-01-01 33-13-01-70	121503 904949	1
65	233N3216-1022	.PANEL ASSY-YAW DAMPER SUPPLIER CODE: V89954 ELECTRICAL EQUIP NUMBER: M10250 COMPONENT MAINT MANUAL REF: 22-21-71 POST ALERT SB: 33A0044 FOR OTHER SYS DETAILS SEE: 22-21-01-01 33-13-01-70	121503 904949	1
70	NAS514P632-5	..SCREW	121503 904949	3

MISSING ITEM NUMBERS NOT APPLICABLE

– ITEM NOT ILLUSTRATED

BOEING PROPRIETARY - Copyright © - Unpublished Work - See title page for details.

FIG ITEM	PART NUMBER	1 2 3 4 5 6 7 NOMENCLATURE	EFFECT FROM TO	UNITS PER ASSY
7				
72	233N3216-2	..BASEPLATE ASSY- SUPPLIER CODE: V89954	121503 904949	1
75	PFSC35-38ASEMB	...STUD ASSY- SUPPLIER CODE: V72794 SPECIFICATION NUMBER: BACS21DX1B	121503 904949	4
80	SF6G6CBB5D	...NUT SUPPLIER CODE: V12324 SPECIFICATION NUMBER: BACN10PA06-6	121503 904949	2
82	233N3216-3	...BASEPLATE- SUPPLIER CODE: V89954	121503 904949	1
85	NAS1801-06-5	..SCREW	121503 904949	3
90	MS35338-41	..WASHER	121503 904949	3
95	69B46200-12	..STANDOFF	121503 904949	3
100	233N3250-15	..BRACKET	121503 904949	1
110	BACP10U0112T	.PANEL ASSY-	121503 904949	1
115	233N3205-19	.PANEL ASSY-HYDR SUPPLIER CODE: V89954 ELECTRICAL EQUIP NUMBER: M10050 COMPONENT MAINT MANUAL REF: 29-00-71 FOR OTHER SYS DETAILS SEE: 29-11-52-01 29-11-02-07 29-11-05-06 29-31-00-03 29-32-51-01 29-33-52-01 33-13-01-70	121503 904949	1

MISSING ITEM NUMBERS NOT APPLICABLE

– ITEM NOT ILLUSTRATED

BOEING PROPRIETARY - Copyright © - Unpublished Work - See title page for details.

FIG ITEM	PART NUMBER	1 2 3 4 5 6 7 NOMENCLATURE	EFFECT FROM TO	UNITS PER ASSY
7				
115	233N3205-24	.PANEL ASSY-HYDR SUPPLIER CODE: V89954 ELECTRICAL EQUIP NUMBER: M10050 COMPONENT MAINT MANUAL REF: 29-00-71 QUALIFIED I/W DATA: 233N3205-300 PANEL ASSY IS I/W 233N3205-24 PANEL ASSY T/W S233T100-6044 LIGHTPLATE FOR OTHER SYS DETAILS SEE: 29-11-52-01 29-11-02-07 29-11-05-06 29-31-00-03 29-32-51-01 29-33-52-01 33-13-01-70	121503 904949	1
115	233N3205-26	.PANEL ASSY-HYDR SUPPLIER CODE: V89954 ELECTRICAL EQUIP NUMBER: M10050 COMPONENT MAINT MANUAL REF: 29-00-71 FOR OTHER SYS DETAILS SEE: 29-11-52-01 29-11-02-07 29-11-05-06 29-31-00-03 29-32-51-01 29-33-52-01 33-13-01-70	121503 904949	1

MISSING ITEM NUMBERS NOT APPLICABLE

– ITEM NOT ILLUSTRATED

BOEING PROPRIETARY - Copyright © - Unpublished Work - See title page for details.

FIG ITEM	PART NUMBER	1 2 3 4 5 6 7 NOMENCLATURE	EFFECT FROM TO	UNITS PER ASSY
7				
115	233N3205-27	.PANEL ASSY-HYDR SUPPLIER CODE: V89954 ELECTRICAL EQUIP NUMBER: M10050 COMPONENT MAINT MANUAL REF: 29-00-71 QUALIFIED I/W DATA: 233N3205-302 PANEL ASSY IS I/W 233N3205-27 PANEL ASSY T/W S233T100-6060 LIGHTPLATE FOR OTHER SYS DETAILS SEE: 29-11-52-01 29-11-02-07 29-11-05-06 29-31-00-03 29-32-51-01 29-33-52-01 33-13-01-70	121503 904949	1
115	233N3205-21	.PANEL ASSY-HYDR SUPPLIER CODE: V89954 ELECTRICAL EQUIP NUMBER: M10050 COMPONENT MAINT MANUAL REF: 29-00-71 FOR OTHER SYS DETAILS SEE: 29-11-02-07 29-11-05-06 29-11-52-01 29-31-00-03 29-32-51-01 29-33-52-01 33-13-01-70	121503 904949	1

MISSING ITEM NUMBERS NOT APPLICABLE

– ITEM NOT ILLUSTRATED

BOEING PROPRIETARY - Copyright © - Unpublished Work - See title page for details.

FIG ITEM	PART NUMBER	1 2 3 4 5 6 7 NOMENCLATURE	EFFECT FROM TO	UNITS PER ASSY
7				
115	233N3205-25	.PANEL ASSY-HYDR SUPPLIER CODE: V89954 ELECTRICAL EQUIP NUMBER: M10050 COMPONENT MAINT MANUAL REF: 29-00-71 QUALIFIED I/W DATA: 233N3205-301 PANEL ASSY IS I/W 233N3205-25 PANEL ASSY T/W S233T100-6044 LIGHTPLATE FOR OTHER SYS DETAILS SEE: 29-11-02-07 29-11-05-06 29-11-52-01 29-31-00-03 29-32-51-01 29-33-52-01 33-13-01-70	121503 904949	1
120	NAS514P632-5	..SCREW	121503 904949	4
123	233N3205-2	..BASEPLATE ASSY- SUPPLIER CODE: V89954 USED ON: 233N3205-19 233N3205-21 233N3205-24 233N3205-25 233N3205-26	121503 904949	1
124	233N3205-30	..BASEPLATE ASSY- SUPPLIER CODE: V89954 USED ON: 233N3205-27	121503 904949	1
125	PFSC35-38ASEMB	...STUD ASSY- SUPPLIER CODE: V72794 SPECIFICATION NUMBER: BACS21DX1B USED ON: 233N3205-2	121503 904949	4
130	SF6G6CBB5D	...NUT SUPPLIER CODE: V12324 SPECIFICATION NUMBER: BACN10PA06-6	121503 904949	3

MISSING ITEM NUMBERS NOT APPLICABLE

— ITEM NOT ILLUSTRATED

BOEING PROPRIETARY - Copyright © - Unpublished Work - See title page for details.

FIG ITEM	PART NUMBER	1 2 3 4 5 6 7 NOMENCLATURE	EFFECT FROM TO	UNITS PER ASSY
7				
132	BACP10U0600T	...PANEL ASSY-	121503	1
		USED ON:	904949	
		233N3205-30		
133	233N3205-3	...BASEPLATE-	121503	1
		SUPPLIER CODE:	904949	
		V89954		
		USED ON:		
		233N3205-2		
135	NAS1801-06-5	..SCREW-	121503	4
		OPTIONAL PART:	904949	
		BACS12HN06-5		
		USED ON:		
		233N3205-24		
		233N3205-25		
		233N3205-27		
135	BACS12CB06-5	..SCREW-	121503	4
		USED ON:	904949	
		233N3205-19		
		233N3205-21		
135	BACS12HN06-5	..SCREW-	121503	4
		OPTIONAL PART:	904949	
		NAS1801-06-5		
		USED ON:		
		233N3205-27		
		233N3205-25		
		233N3205-24		
135	BACS12HN06-5	..SCREW-	121503	4
		USED ON:	904949	
		233N3205-26		
140	MS35338-41	..WASHER-	121503	4
		USED ON:	904949	
		233N3205-19		
		233N3205-21		
140	BACW10EC06S	..WASHER-	121503	4
		USED ON:	904949	
		233N3205-24		
		233N3205-25		
		233N3205-26		
140	MS35338-41	..WASHER-	121503	4
		OPTIONAL PART:	904949	
		BACW10EC06S		
		USED ON:		
		233N3205-27		
140	BACW10EC06S	..WASHER-	121503	4
		OPTIONAL PART:	904949	
		MS35338-41		
		USED ON:		
		233N3205-27		

MISSING ITEM NUMBERS NOT APPLICABLE

– ITEM NOT ILLUSTRATED

BOEING PROPRIETARY - Copyright © - Unpublished Work - See title page for details.

FIG ITEM	PART NUMBER	1 2 3 4 5 6 7 NOMENCLATURE	EFFECT FROM TO	UNITS PER ASSY
7				
145	69B46200-11	..STANDOFF-	121503 904949	4
148	233N3250-8	..BRACKET	121503 904949	1
150	233T3200-2	.PANEL ASSY	121503 904949	1
152	BACS21DD1B	..STUD ASSY SUPPLIER CODE: V08524 SPECIFICATION NUMBER: BACS21DD1B	121503 904949	3
154	233T3200-4	..BASEPLATE	121503 904949	1
155	233N3202-17	.PANEL ASSY-ANN. LIGHTS SUPPLIER CODE: V89954 MISCELLANEOUS DATA: FOR SPARES PROCURE DETAIL PARTS ELECTRICAL EQUIP NUMBER: M10394 COMPONENT MAINT MANUAL REF: 33-16-71 FOR OTHER SYS DETAILS SEE: 22-24-51-01 27-21-53-01 27-41-55-01 27-61-51-01 27-62-52-01 30-31-51-01 30-32-51-01 30-33-51-01 32-42-52-01 52-71-51-01	121503 904949	1
160	NAS514P632-5	..SCREW	121503 904949	3
165	233N3202-2	..BASEPLATE ASSY- SUPPLIER CODE: V89954	121503 904949	1
170	BACS21DD1B	...STUD ASSY SUPPLIER CODE: V08524 SPECIFICATION NUMBER: BACS21DD1B	121503 904949	4
175	BACS12CB06-5	..SCREW-	121503 904949	3
180	MS35338-41	..WASHER	121503 904949	3

MISSING ITEM NUMBERS NOT APPLICABLE

– ITEM NOT ILLUSTRATED

BOEING PROPRIETARY - Copyright © - Unpublished Work - See title page for details.

FIG ITEM	PART NUMBER	1 2 3 4 5 6 7 NOMENCLATURE	EFFECT FROM TO	UNITS PER ASSY
7				
185	69B46200-10	..STANDOFF	121503 904949	3
190	233N3250-7	..BRACKET-CONN.	121503 904949	1
200	BACP10U0225T	.PANEL	121503 904949	1
205	622-6827-002	.PANEL ASSY-HF CONT SUPPLIER CODE: V4V792 COMPONENT MAINT MANUAL REF: 23-10-73 POST RAPID REVISION: RR92035-3 FOR BREAKDOWN SEE: 23-11-02-01	121503	RF
205	622-5432-002	.PANEL ASSY-HF CONT SUPPLIER CODE: V4V792 COMPONENT MAINT MANUAL REF: 23-10-71 FOR BREAKDOWN SEE: 23-11-02-01	121503	RF
210	622-6827-002	.PANEL ASSY-HF CONT (CUSTOMER FURNISHED) SUPPLIER CODE: V4V792 COMPONENT MAINT MANUAL REF: 23-10-73 OPTIONAL PART: 622-5432-002 V4V792 FOR BREAKDOWN SEE: 23-11-02-01	904949	RF
210	622-5432-002	.PANEL ASSY-HF CONT (CUSTOMER FURNISHED) SUPPLIER CODE: V4V792 COMPONENT MAINT MANUAL REF: 23-10-71 OPTIONAL PART: 622-6827-002 V4V792 FOR BREAKDOWN SEE: 23-11-02-01	904949	RF
225	BACP10U0037T	.PANEL ASSY-	121503 904949	1

MISSING ITEM NUMBERS NOT APPLICABLE

– ITEM NOT ILLUSTRATED

BOEING PROPRIETARY - Copyright © - Unpublished Work - See title page for details.

FIG ITEM	PART NUMBER	1 2 3 4 5 6 7 NOMENCLATURE	EFFECT FROM TO	UNITS PER ASSY
7				
230	233T3242-7	.PANEL ASSY- SUPPLIER CODE: V89954 ELECTRICAL EQUIP NUMBER: M10761 COMPONENT MAINT MANUAL REF: 73-21-86 PRE ALERT SB: 33A0044R1 FOR OTHER SYS DETAILS SEE: 33-13-01-70 73-21-52-01	121503 904949	1
230	233T3242-1007	.PANEL ASSY- SUPPLIER CODE: V89954 ELECTRICAL EQUIP NUMBER: M10761 COMPONENT MAINT MANUAL REF: 73-21-86 POST ALERT SB: 33A0044R1 FOR OTHER SYS DETAILS SEE: 33-13-01-70 73-21-52-01	121503 904949	1
233	NAS514P632-5P	..SCREW	121503 904949	3
235	233T3242-2	..BASEPLATE ASSY- SUPPLIER CODE: V89954	121503 904949	1
245	PFSC35-38ASEMB	...STUD ASSY SUPPLIER CODE: V72794 SPECIFICATION NUMBER: BACS21DX1B	121503 904949	4
247	SF6G6CBB5D	...NUT- SUPPLIER CODE: V12324	121503 904949	2
250	BACP10U0187N	...BASEPLATE	121503 904949	1
255	BACS12CK06U5	..SCREW-	121503 904949	3
260	BACW10EC06C	..WASHER-	121503 904949	3
270	69B46200-12	..STANDOFF	121503 904949	3
275	233T6200-142	..BRACKET-SPRT	121503 904949	1

MISSING ITEM NUMBERS NOT APPLICABLE

– ITEM NOT ILLUSTRATED

BOEING PROPRIETARY - Copyright © - Unpublished Work - See title page for details.

FIG ITEM	PART NUMBER	1 2 3 4 5 6 7 NOMENCLATURE	EFFECT FROM TO	UNITS PER ASSY
7				
280	233N3211-39	.PANEL ASSY-BATTERY/STBY PWR SUPPLIER CODE: V89954 ELECTRICAL EQUIP NUMBER: M10062 COMPONENT MAINT MANUAL REF: 24-33-72 QUALIFIED I/W DATA: 233N3211-24 -26 -31 -39 -40 ARE ALL INTERCHANGEABLE SUBJECT TO CUSTOMER PREFERENCE PRE ALERT SB: 33A0044R1 FOR OTHER SYS DETAILS SEE: 24-31-01-11 24-31-03-10 24-33-04-02 33-13-01-70	121503 904949	1
280	233N3211-1039	.PANEL ASSY-BATTERY/STBY PWR SUPPLIER CODE: V89954 ELECTRICAL EQUIP NUMBER: M10062 COMPONENT MAINT MANUAL REF: 24-33-72 POST ALERT SB: 33A0044R1 FOR OTHER SYS DETAILS SEE: 24-31-01-11 24-31-03-10 24-33-04-02 33-13-01-70	121503 904949	1
283	NAS514P632-5	..SCREW	121503 904949	3
285	233N3211-48	..BASEPLATE ASSY- SUPPLIER CODE: V89954	121503 904949	1
295	PFSC35-38ASEMB	...STUD ASSY- SUPPLIER CODE: V72794 SPECIFICATION NUMBER: BACS21DX1B	121503 904949	4

MISSING ITEM NUMBERS NOT APPLICABLE

– ITEM NOT ILLUSTRATED

BOEING PROPRIETARY - Copyright © - Unpublished Work - See title page for details.

FIG ITEM	PART NUMBER	1 2 3 4 5 6 7 NOMENCLATURE	EFFECT FROM TO	UNITS PER ASSY
7				
300	SF6G6CBB5D	...NUT SUPPLIER CODE: V12324 SPECIFICATION NUMBER: BACN10PA06-6	121503 904949	2
305	BACP10U0225NC	...PANEL ASSY-	121503 904949	1
310	NAS1801-06-5	..SCREW	121503 904949	3
315	MS35338-41	..WASHER	121503 904949	3
320	69B46200-17	..STANDOFF	121503 904949	3
325	233N3250-5	..BRACKET	121503 904949	1
330	233N3209-27	.PANEL ASSY-E/E SUPPLIER CODE: V89954 ELECTRICAL EQUIP NUMBER: M10063 COMPONENT MAINT MANUAL REF: 24-22-71 QUALIFIED I/W DATA: 233N3209-12 -18 -20 -22 -25 -26 -27 ARE ALL INTERCHANGEABLE EXCEPT SUBJECT TO CUST PREFERENCE FOR OTHER SYS DETAILS SEE: 24-11-52-01 24-22-01-04 24-41-51-01 24-51-02-01 33-13-01-70	121503 904949	1
332	NAS514P632-5	..SCREW	121503 904949	4
335	NAS1801-06-5	..SCREW	121503 904949	4
340	MS35338-41	..WASHER	121503 904949	4
342	233N3250-2	..BRACKET	121503 904949	1
345	69B46200-12	..STANDOFF	121503 904949	4
350	233N3209-2	..BASEPLATE ASSY- SUPPLIER CODE: V89954	121503 904949	1

MISSING ITEM NUMBERS NOT APPLICABLE

– ITEM NOT ILLUSTRATED

BOEING PROPRIETARY - Copyright © - Unpublished Work - See title page for details.

FIG ITEM	PART NUMBER	1 2 3 4 5 6 7 NOMENCLATURE	EFFECT FROM TO	UNITS PER ASSY
7				
355	PFSC35-38ASEMB	...STUD ASSY- SUPPLIER CODE: V72794 SPECIFICATION NUMBER: BACS21DX1B	121503 904949	4
360	SF6G6CBB5D	...NUT SUPPLIER CODE: V12324 SPECIFICATION NUMBER: BACN10PA06-6	121503 904949	4
362	233N3209-3	...BASEPLATE- SUPPLIER CODE: V89954	121503 904949	1
365	233N3222-8	.PANEL ASSY-APU START SUPPLIER CODE: V89954 ELECTRICAL EQUIP NUMBER: M10324 COMPONENT MAINT MANUAL REF: 49-61-53 QUALIFIED I/W DATA: THE 233N3222-300 PANEL ASSY IS I/W THE 233N3222-8 PANEL ASSY T/W THE S233T100-6025 LIGHTPLATE AND BP248-127 KNOB. FOR OTHER SYS DETAILS SEE: 49-41-00-03 49-70-00-02 33-13-01-70	121503 904949	1
370	NAS514P632-5	..SCREW	121503 904949	3
375	NAS1801-6-5	..SCREW	121503 904949	3
380	MS35338-41	..WASHER	121503 904949	3
385	69B46200-11	..STANDOFF	121503 904949	3
390	233N3250-16	..BRACKET-SPRT	121503 904949	1
395	233N3222-2	..BASEPLATE ASSY- SUPPLIER CODE: V89954	121503 904949	1
400	BACS21DD1B	...STUD ASSY SUPPLIER CODE: V08524 SPECIFICATION NUMBER: BACS21DD1B	121503 904949	4

MISSING ITEM NUMBERS NOT APPLICABLE

– ITEM NOT ILLUSTRATED

BOEING PROPRIETARY - Copyright © - Unpublished Work - See title page for details.

FIG ITEM	PART NUMBER	1 2 3 4 5 6 7 NOMENCLATURE	EFFECT FROM TO	UNITS PER ASSY
7				
402	SF6G6CBB5D	...NUT SUPPLIER CODE: V12324 SPECIFICATION NUMBER: BACN10PA06-6	121503 904949	2
405	233N3222-3	...BASEPLATE- SUPPLIER CODE: V89954	121503 904949	1
420	233N3214-33	.PANEL ASSY-LIGHTING CONT SUPPLIER CODE: V89954 ELECTRICAL EQUIP NUMBER: M10056 COMPONENT MAINT MANUAL REF: 33-11-71 QUALIFIED I/W DATA: 233N3214-24 -27 -31 -32 -33 ARE ALL INTERCHANGEABLE EXCEPT SUBJECT TO CUSTOMER PREFERENCE FOR OTHER SYS DETAILS SEE: 33-11-51-14 33-11-03-04 33-13-01-70 33-42-01-05	121503 904949	1
423	NAS514P632-5	..SCREW	121503 904949	3
425	233N3214-16	..BASEPLATE ASSY- SUPPLIER CODE: V89954	121503 904949	1
435	PFSC35-38ASEMB	...STUD ASSY- SUPPLIER CODE: V72794 SPECIFICATION NUMBER: BACS21DX1B	121503 904949	3
440	SF6G6CBB5D	...NUT SUPPLIER CODE: V12324 SPECIFICATION NUMBER: BACN10PA06-6	121503 904949	3
445	233N3214-17	...BASEPLATE- SUPPLIER CODE: V89954	121503 904949	1
450	BACS12HN06-5	..SCREW-	121503 904949	3
455	BACW10EC06S	..WASHER-	121503 904949	3

MISSING ITEM NUMBERS NOT APPLICABLE

– ITEM NOT ILLUSTRATED

BOEING PROPRIETARY - Copyright © - Unpublished Work - See title page for details.

FIG ITEM	PART NUMBER	1 2 3 4 5 6 7 NOMENCLATURE	EFFECT FROM TO	UNITS PER ASSY
7				
460	69B46200-14	..STANDOFF	121503 904949	3
465	233N3250-34	..BRACKET	121503 904949	1
470	BACP10U0337T	.PANEL ASSY-	121503 904949	1
475	233T3210-30	.PANEL ASSY-EMER LIGHTS SUPPLIER CODE: V89954 ELECTRICAL EQUIP NUMBER: M00043 COMPONENT MAINT MANUAL REF: 33-51-03 QUALIFIED I/W DATA: 233T3210-22 -25 -28 -29 -30 ARE ALL INTERCHANGEABLE EXCEPT SUBJECT TO CUSTOMER PREFERENCE PRE ALERT SB: 33A0044R1 FOR OTHER SYS DETAILS SEE: 33-13-01-70 33-51-08-01 35-21-51-01	121503 904949	1
475	233T3210-1030	.PANEL ASSY-EMER LIGHTS SUPPLIER CODE: V89954 ELECTRICAL EQUIP NUMBER: M00043 COMPONENT MAINT MANUAL REF: 33-51-03 POST ALERT SB: 33A0044R1 FOR OTHER SYS DETAILS SEE: 33-13-01-70 33-51-08-01 35-21-51-01	121503 904949	1
478	NAS514P632-5	..SCREW	121503 904949	3
480	233T3210-17	..BASEPLATE ASSY- SUPPLIER CODE: V89954	121503 904949	1
490	BACS21DD1B	...STUD ASSY SUPPLIER CODE: V08524 SPECIFICATION NUMBER: BACS21DD1B	121503 904949	4

MISSING ITEM NUMBERS NOT APPLICABLE

– ITEM NOT ILLUSTRATED

BOEING PROPRIETARY - Copyright © - Unpublished Work - See title page for details.

FIG ITEM	PART NUMBER	1 2 3 4 5 6 7 NOMENCLATURE	EFFECT FROM TO	UNITS PER ASSY
7				
495	SF6G6CBB5D	...NUT SUPPLIER CODE: V12324 SPECIFICATION NUMBER: BACN10PA06-6	121503 904949	2
500	BACP10U0225N	...PANEL	121503 904949	1
505	NAS1801-06-5	..SCREW	121503 904949	3
510	MS35338-41	..WASHER	121503 904949	3
515	69B46200-10	..STANDOFF	121503 904949	3
520	233T6200-82	..BRACKET	121503 904949	1
525	233N3223-51	.PANEL ASSY-ENG START/RAT SUPPLIER CODE: V89954 ELECTRICAL EQUIP NUMBER: M10468 COMPONENT MAINT MANUAL REF: 31-12-01 PRE ALERT SB: 33A0044R1 FOR OTHER SYS DETAILS SEE: 29-21-54-01 33-13-01-70 73-21-52-01 74-31-51-01 80-11-09-03	121503 904949	1
525	233N3223-52	.PANEL ASSY-ENG START/RAT SUPPLIER CODE: V89954 ELECTRICAL EQUIP NUMBER: M10468 COMPONENT MAINT MANUAL REF: 31-12-01 PRE ALERT SB: 33A0044R1 FOR OTHER SYS DETAILS SEE: 29-21-54-01 33-13-01-70 74-31-51-01 80-11-09-03	121503 904949	1

MISSING ITEM NUMBERS NOT APPLICABLE

– ITEM NOT ILLUSTRATED

BOEING PROPRIETARY - Copyright © - Unpublished Work - See title page for details.

FIG ITEM	PART NUMBER	1 2 3 4 5 6 7 NOMENCLATURE	EFFECT FROM TO	UNITS PER ASSY
7				
525	233N3223-1051	.PANEL ASSY-ENG START/RAT SUPPLIER CODE: V89954 ELECTRICAL EQUIP NUMBER: M10468 COMPONENT MAINT MANUAL REF: 31-12-01 POST ALERT SB: 33A0044R1 FOR OTHER SYS DETAILS SEE: 29-21-54-01 33-13-01-70 73-21-52-01 74-31-51-01 80-11-09-03	121503 904949	1
525	233N3223-1052	.PANEL ASSY-ENG START/RAT SUPPLIER CODE: V89954 ELECTRICAL EQUIP NUMBER: M10468 COMPONENT MAINT MANUAL REF: 31-12-01 POST ALERT SB: 33A0044R1 FOR OTHER SYS DETAILS SEE: 29-21-54-01 33-13-01-70 74-31-51-01 80-11-09-03	121503 904949	1
530	NAS514P632-5	..SCREW	121503 904949	3
535	233N3223-8	..BASEPLATE ASSY- SUPPLIER CODE: V89954	121503 904949	1
540	PFSC35-38ASEMB	...STUD ASSY- SUPPLIER CODE: V72794 SPECIFICATION NUMBER: BACS21DX1B	121503 904949	4
545	SF6G6CBB5D	...NUT SUPPLIER CODE: V12324 SPECIFICATION NUMBER: BACN10PA06-6	121503 904949	4
550	233N3223-9	...BASEPLATE- SUPPLIER CODE: V89954	121503 904949	1
555	NAS1801-06-5	..SCREW	121503 904949	3

MISSING ITEM NUMBERS NOT APPLICABLE

– ITEM NOT ILLUSTRATED

BOEING PROPRIETARY - Copyright © - Unpublished Work - See title page for details.

FIG ITEM	PART NUMBER	1 2 3 4 5 6 7 NOMENCLATURE	EFFECT FROM TO	UNITS PER ASSY
7				
600	MS35338-41	..WASHER	121503 904949	3
605	69B46200-13	..STANDOFF	121503 904949	3
607	233N3250-29	..BRACKET	121503 904949	1
610	233N3206-13	.PANEL ASSY-FUEL CONT SUPPLIER CODE: V89954 ELECTRICAL EQUIP NUMBER: M10055 COMPONENT MAINT MANUAL REF: 28-41-71 PRE ALERT SB: 33A0044R1 28A0105R1 PRE COMPONENT SB: 233N3206-28-03 FOR OTHER SYS DETAILS SEE: 28-22-51-01 28-41-51-01 33-13-01-70	121503 904949	1
610	233N3206-15	.PANEL ASSY-FUEL CONT SUPPLIER CODE: V89954 ELECTRICAL EQUIP NUMBER: M10055 COMPONENT MAINT MANUAL REF: 28-41-71 PRE ALERT SB: 33A0044 28A0105R1 PRE COMPONENT SB: 233N3206-28-03 FOR OTHER SYS DETAILS SEE: 28-22-51-01 28-41-51-01 33-13-01-70	121503 904949	1

MISSING ITEM NUMBERS NOT APPLICABLE

– ITEM NOT ILLUSTRATED

BOEING PROPRIETARY - Copyright © - Unpublished Work - See title page for details.

FIG ITEM	PART NUMBER	1 2 3 4 5 6 7 NOMENCLATURE	EFFECT FROM TO	UNITS PER ASSY
7				
610	233N3206-17	.PANEL ASSY-FUEL CONT SUPPLIER CODE: V89954 ELECTRICAL EQUIP NUMBER: M10055 COMPONENT MAINT MANUAL REF: 28-41-71 PRE ALERT SB: 33A0044R1 28A0105R1 PRE COMPONENT SB: 233N3206-28-03 FOR OTHER SYS DETAILS SEE: 28-22-51-01 28-41-51-01 33-13-01-70	121503 904949	1
610	233N3206-14	.PANEL ASSY-FUEL CONT SUPPLIER CODE: V89954 ELECTRICAL EQUIP NUMBER: M10055 COMPONENT MAINT MANUAL REF: 28-41-71 PRE ALERT SB: 33A0044 28A0105R1 PRE COMPONENT SB: 233N3206-28-03 FOR OTHER SYS DETAILS SEE: 28-22-51-01 28-41-51-01 33-13-01-70	121503 904949	1
610	233N3206-16	.PANEL ASSY-FUEL CONT SUPPLIER CODE: V89954 ELECTRICAL EQUIP NUMBER: M10055 COMPONENT MAINT MANUAL REF: 28-41-71 PRE ALERT SB: 33A0044 28A0105R1 PRE COMPONENT SB: 233N3206-28-03 FOR OTHER SYS DETAILS SEE: 28-22-51-01 28-41-51-01 33-13-01-70	121503 904949	1

MISSING ITEM NUMBERS NOT APPLICABLE

– ITEM NOT ILLUSTRATED

BOEING PROPRIETARY - Copyright © - Unpublished Work - See title page for details.

FIG ITEM	PART NUMBER	1 2 3 4 5 6 7 NOMENCLATURE	EFFECT FROM TO	UNITS PER ASSY
7				
610	233N3206-1013	.PANEL ASSY-FUEL CONT SUPPLIER CODE: V89954 ELECTRICAL EQUIP NUMBER: M10055 COMPONENT MAINT MANUAL REF: 28-41-71 POST ALERT SB: 33A0044R1 PRE ALERT SB: 28A0105R1 PRE COMPONENT SB: 233N3206-28-03 FOR OTHER SYS DETAILS SEE: 28-22-51-01 28-41-51-01 33-13-01-70	121503 904949	1
610	233N3206-1015	.PANEL ASSY-FUEL CONT SUPPLIER CODE: V89954 ELECTRICAL EQUIP NUMBER: M10055 COMPONENT MAINT MANUAL REF: 28-41-71 POST ALERT SB: 33A0044 PRE ALERT SB: 28A0105R1 PRE COMPONENT SB: 233N3206-28-03 FOR OTHER SYS DETAILS SEE: 28-22-51-01 28-41-51-01 33-13-01-70	121503 904949	1

MISSING ITEM NUMBERS NOT APPLICABLE

– ITEM NOT ILLUSTRATED

BOEING PROPRIETARY - Copyright © - Unpublished Work - See title page for details.

FIG ITEM	PART NUMBER	1 2 3 4 5 6 7 NOMENCLATURE	EFFECT FROM TO	UNITS PER ASSY
7				
610	233N3206-1017	.PANEL ASSY-FUEL CONT SUPPLIER CODE: V89954 ELECTRICAL EQUIP NUMBER: M10055 COMPONENT MAINT MANUAL REF: 28-41-71 POST ALERT SB: 33A0044R1 PRE ALERT SB: 28A0105R1 PRE COMPONENT SB: 233N3206-28-03 FOR OTHER SYS DETAILS SEE: 28-22-51-01 28-41-51-01 33-13-01-70	121503 904949	1
610	233N3206-1014	.PANEL ASSY-FUEL CONT SUPPLIER CODE: V89954 ELECTRICAL EQUIP NUMBER: M10055 COMPONENT MAINT MANUAL REF: 28-41-71 POST ALERT SB: 33A0044 PRE ALERT SB: 28A0105R1 PRE COMPONENT SB: 233N3206-28-03 FOR OTHER SYS DETAILS SEE: 28-22-51-01 28-41-51-01 33-13-01-70	121503 904949	1

MISSING ITEM NUMBERS NOT APPLICABLE

– ITEM NOT ILLUSTRATED

BOEING PROPRIETARY - Copyright © - Unpublished Work - See title page for details.

FIG ITEM	PART NUMBER	1 2 3 4 5 6 7 NOMENCLATURE	EFFECT FROM TO	UNITS PER ASSY
7				
610	233N3206-1016	.PANEL ASSY-FUEL CONT SUPPLIER CODE: V89954 ELECTRICAL EQUIP NUMBER: M10055 COMPONENT MAINT MANUAL REF: 28-41-71 POST ALERT SB: 33A0044 PRE ALERT SB: 28A0105R1 PRE COMPONENT SB: 233N3206-28-03 FOR OTHER SYS DETAILS SEE: 28-22-51-01 28-41-51-01 33-13-01-70	121503 904949	1
610	233N3206-2013	.PANEL ASSY-FUEL CONT SUPPLIER CODE: V89954 ELECTRICAL EQUIP NUMBER: M10055 COMPONENT MAINT MANUAL REF: 28-41-71 POST ALERT SB: 28A0105R1 POST COMPONENT SB: 233N3206-28-03 FOR OTHER SYS DETAILS SEE: 28-22-51-01 28-41-51-01 33-13-01-70	121503 904949	1
610	233N3206-2014	.PANEL ASSY-FUEL CONT SUPPLIER CODE: V89954 ELECTRICAL EQUIP NUMBER: M10055 COMPONENT MAINT MANUAL REF: 28-41-71 POST ALERT SB: 28A0105R1 POST COMPONENT SB: 233N3206-28-03 FOR OTHER SYS DETAILS SEE: 28-22-51-01 28-41-51-01 33-13-01-70	121503 904949	1

MISSING ITEM NUMBERS NOT APPLICABLE

– ITEM NOT ILLUSTRATED

BOEING PROPRIETARY - Copyright © - Unpublished Work - See title page for details.

FIG ITEM	PART NUMBER	1 2 3 4 5 6 7 NOMENCLATURE	EFFECT FROM TO	UNITS PER ASSY
7				
610	233N3206-2015	.PANEL ASSY-FUEL CONT SUPPLIER CODE: V89954 ELECTRICAL EQUIP NUMBER: M10055 COMPONENT MAINT MANUAL REF: 28-41-71 POST ALERT SB: 28A0105R1 POST COMPONENT SB: 233N3206-28-03 FOR OTHER SYS DETAILS SEE: 28-22-51-01 28-41-51-01 33-13-01-70	121503 904949	1
610	233N3206-2016	.PANEL ASSY-FUEL CONT SUPPLIER CODE: V89954 ELECTRICAL EQUIP NUMBER: M10055 COMPONENT MAINT MANUAL REF: 28-41-71 POST ALERT SB: 28A0105R1 POST COMPONENT SB: 233N3206-28-03 FOR OTHER SYS DETAILS SEE: 28-22-51-01 28-41-51-01 33-13-01-70	121503 904949	1
610	233N3206-2017	.PANEL ASSY-FUEL CONT SUPPLIER CODE: V89954 ELECTRICAL EQUIP NUMBER: M10055 COMPONENT MAINT MANUAL REF: 28-41-71 POST ALERT SB: 28A0105R1 POST COMPONENT SB: 233N3206-28-03 FOR OTHER SYS DETAILS SEE: 28-22-51-01 28-41-51-01 33-13-01-70	121503 904949	1

MISSING ITEM NUMBERS NOT APPLICABLE

– ITEM NOT ILLUSTRATED

BOEING PROPRIETARY - Copyright © - Unpublished Work - See title page for details.

FIG ITEM	PART NUMBER	1 2 3 4 5 6 7 NOMENCLATURE	EFFECT FROM TO	UNITS PER ASSY
7				
610	233N3206-3013	.PANEL ASSY-FUEL CONT SUPPLIER CODE: V89954 ELECTRICAL EQUIP NUMBER: M10055 COMPONENT MAINT MANUAL REF: 28-41-71 POST ALERT SB: 28A0105R1 POST COMPONENT SB: 233N3206-28-03 FOR OTHER SYS DETAILS SEE: 28-22-51-01 28-41-51-01 33-13-01-70	121503 904949	1
610	233N3206-3014	.PANEL ASSY-FUEL CONT SUPPLIER CODE: V89954 ELECTRICAL EQUIP NUMBER: M10055 COMPONENT MAINT MANUAL REF: 28-41-71 POST ALERT SB: 28A0105R1 POST COMPONENT SB: 233N3206-28-03 FOR OTHER SYS DETAILS SEE: 28-22-51-01 28-41-51-01 33-13-01-70	121503 904949	1
611	233N3206-3015	.PANEL ASSY-FUEL CONT SUPPLIER CODE: V89954 ELECTRICAL EQUIP NUMBER: M10055 COMPONENT MAINT MANUAL REF: 28-41-71 POST ALERT SB: 28A0105R1 POST COMPONENT SB: 233N3206-28-03 FOR OTHER SYS DETAILS SEE: 28-22-51-01 28-41-51-01 33-13-01-70	121503 904949	1

MISSING ITEM NUMBERS NOT APPLICABLE

– ITEM NOT ILLUSTRATED

BOEING PROPRIETARY - Copyright © - Unpublished Work - See title page for details.

FIG ITEM	PART NUMBER	1 2 3 4 5 6 7 NOMENCLATURE	EFFECT FROM TO	UNITS PER ASSY
7				
611	233N3206-3016	.PANEL ASSY-FUEL CONT SUPPLIER CODE: V89954 ELECTRICAL EQUIP NUMBER: M10055 COMPONENT MAINT MANUAL REF: 28-41-71 POST ALERT SB: 28A0105R1 POST COMPONENT SB: 233N3206-28-03 FOR OTHER SYS DETAILS SEE: 28-22-51-01 28-41-51-01 33-13-01-70	121503 904949	1
611	233N3206-3017	.PANEL ASSY-FUEL CONT SUPPLIER CODE: V89954 ELECTRICAL EQUIP NUMBER: M10055 COMPONENT MAINT MANUAL REF: 28-41-71 POST ALERT SB: 28A0105R1 POST COMPONENT SB: 233N3206-28-03 FOR OTHER SYS DETAILS SEE: 28-22-51-01 28-41-51-01 33-13-01-70	121503 904949	1
620	NAS514P632-5	..SCREW- USED ON: 233N3206-2013 233N3206-2014 233N3206-2015 233N3206-2016 233N3206-2017 233N3206-3013 233N3206-3014 233N3206-3015 233N3206-3016 233N3206-3017	121503 904949	3

MISSING ITEM NUMBERS NOT APPLICABLE

– ITEM NOT ILLUSTRATED

BOEING PROPRIETARY - Copyright © - Unpublished Work - See title page for details.

FIG ITEM	PART NUMBER	1 2 3 4 5 6 7 NOMENCLATURE	EFFECT FROM TO	UNITS PER ASSY
7				
626	233T3235-6	..BASEPLATE ASSY-	121503 904949	1
		SUPPLIER CODE:		
		V89954		
		USED ON:		
		233N3206-2013		
		233N3206-2014		
		233N3206-2015		
		233N3206-2016		
		233N3206-2017		
		233N3206-3013		
		233N3206-3014		
		233N3206-3015		
		233N3206-3016		
		233N3206-3017		
630	BACS21DD1B	...STUD ASSY-	121503 904949	4
		USED ON:		
		233N3206-2013		
		233N3206-2014		
		233N3206-2015		
		233N3206-2016		
		233N3206-2017		
		233N3206-3013		
		233N3206-3014		
		233N3206-3015		
		233N3206-3016		
		233N3206-3017		
640	SF6G6CBB5D	...NUT-	121503 904949	3
		SUPPLIER CODE:		
		V12324		
		SPECIFICATION NUMBER:		
		BACN10PA06-6		
		USED ON:		
		233N3206-2013		
		233N3206-2014		
		233N3206-2015		
		233N3206-2016		
		233N3206-2017		
		233N3206-3013		
		233N3206-3014		
		233N3206-3015		
		233N3206-3016		
		233N3206-3017		
647	BACP10U0412N	...BASEPLATE	121503 904949	1

MISSING ITEM NUMBERS NOT APPLICABLE

– ITEM NOT ILLUSTRATED

BOEING PROPRIETARY - Copyright © - Unpublished Work - See title page for details.

FIG ITEM	PART NUMBER	1 2 3 4 5 6 7 NOMENCLATURE	EFFECT FROM TO	UNITS PER ASSY
7				
650	NAS1801-06-5	..SCREW-	121503	3
		MISCELLANEOUS DATA:	904949	
		SPEC BACS12CB06-5		
		USED ON:		
		233N3206-15		
		233N3206-16		
		233N3206-17		
		233N3206-1015		
		233N3206-1016		
		233N3206-1017		
		233N3206-2015		
		233N3206-2016		
		233N3206-2017		
		233N3206-3015		
		233N3206-3016		
		233N3206-3017		
650	BACS12CB06-5	..SCREW-	121503	3
		USED ON:	904949	
		233N3206-13		
		233N3206-14		
		233N3206-1013		
		233N3206-1014		
		PRE ALERT SB:		
		28A0105R1		
		PRE COMPONENT SB:		
		233N3206-28-03		
650	NAS1635-06-5	..SCREW-	121503	3
		OPTIONAL PART:	904949	
		NAS1801-06-5		
		USED ON:		
		233N3206-2013		
		233N3206-2014		
		233N3206-3013		
		233N3206-3014		
		POST ALERT SB:		
		28A0105R1		
		POST COMPONENT SB:		
		233N3206-28-03		

MISSING ITEM NUMBERS NOT APPLICABLE

– ITEM NOT ILLUSTRATED

BOEING PROPRIETARY - Copyright © - Unpublished Work - See title page for details.

FIG ITEM	PART NUMBER	1 2 3 4 5 6 7 NOMENCLATURE	EFFECT FROM TO	UNITS PER ASSY
7				
650	NAS1801-06-5	..SCREW-	121503	3
		MISCELLANEOUS DATA:	904949	
		SPEC BACS12CB06-5		
		OPTIONAL PART:		
		NAS1635-06-5		
		USED ON:		
		233N3206-2013		
		233N3206-2014		
		233N3206-3013		
		233N3206-3014		
		POST ALERT SB:		
		28A0105R1		
		POST COMPONENT SB:		
		233N3206-28-03		
660	MS35338-41	..WASHER-	121503	3
		USED ON:	904949	
		233N3206-2013		
		233N3206-2014		
		233N3206-2015		
		233N3206-2016		
		233N3206-2017		
		233N3206-3013		
		233N3206-3014		
		233N3206-3015		
		233N3206-3016		
		233N3206-3017		
670	69B46200-11	..STANDOFF-	121503	3
		USED ON:	904949	
		233N3206-2013		
		233N3206-2014		
		233N3206-2015		
		233N3206-2016		
		233N3206-2017		
		233N3206-3013		
		233N3206-3014		
		233N3206-3015		
		233N3206-3016		
		233N3206-3017		

MISSING ITEM NUMBERS NOT APPLICABLE

– ITEM NOT ILLUSTRATED

BOEING PROPRIETARY - Copyright © - Unpublished Work - See title page for details.

FIG ITEM	PART NUMBER	1 2 3 4 5 6 7 NOMENCLATURE	EFFECT FROM TO	UNITS PER ASSY
7				
677	233N3250-38	..BRACKET-	121503	1
		USED ON:	904949	
		233N3206-2013		
		233N3206-2014		
		233N3206-2015		
		233N3206-2016		
		233N3206-2017		
		233N3206-3013		
		233N3206-3014		
		233N3206-3015		
		233N3206-3016		
		233N3206-3017		
680	20-212-07	.INDICATOR-INTEGRATED	904949	RF
		FUEL QTY		
		SUPPLIER CODE:		
		V35012		
		SPECIFICATION NUMBER:		
		S345N011-8		
		ELECTRICAL EQUIP NUMBER:		
		M10054		
		COMPONENT MAINT MANUAL REF:		
		28-41-60		
		POST SERVICE BULLETIN:		
		28-0116		
		FOR BREAKDOWN SEE:		
		28-41-04-02		
683	10080-0101	.INDICATOR ASSY-INTEGRATED	121503	RF
		FUEL QTY		
		SUPPLIER CODE:		
		V89305		
		SPECIFICATION NUMBER:		
		S345N001-001		
		ELECTRICAL EQUIP NUMBER:		
		M10054		
		COMPONENT MAINT MANUAL REF:		
		28-42-08		
		OPTIONAL PART:		
		10080-0201		
		V89305		
		FOR BREAKDOWN SEE:		
		28-41-04-02		

MISSING ITEM NUMBERS NOT APPLICABLE

– ITEM NOT ILLUSTRATED

BOEING PROPRIETARY - Copyright © - Unpublished Work - See title page for details.

FIG ITEM	PART NUMBER	1 2 3 4 5 6 7 NOMENCLATURE	EFFECT FROM TO	UNITS PER ASSY
7				
683	10080-0201	.INDICATOR ASSY-INTEGRATED FUEL QTY SUPPLIER CODE: V89305 FUNCTIONAL DESCRIPTION: MODULE DISPLAYS INDIVIDUAL TANK QUANTITY, TOTAL QUANTITY & TEMPERATURE OF MAIN TANK SPECIFICATION NUMBER: S345N001-001 ELECTRICAL EQUIP NUMBER: M10054 COMPONENT MAINT MANUAL REF: 28-42-08 OPTIONAL PART: 10080-0101 V89305 FOR BREAKDOWN SEE: 28-41-04-02	121503	RF
685	233N3204-20	.PANEL ASSY-ANTI-ICE SUPPLIER CODE: V89954 ELECTRICAL EQUIP NUMBER: M10397 COMPONENT MAINT MANUAL REF: 30-11-72 QUALIFIED I/W DATA: 233N3204-17 -18 -19 -20 ARE ALL INTERCHANGEABLE EXCEPT SUBJECT TO CUSTOMER PREFERENCE 233N3204-301 PANEL ASSY IS I/W 233N3204-20 PANEL ASSY T/W S233T100-1070 LIGHTPLATE PRE ALERT SB: 33A0044 FOR OTHER SYS DETAILS SEE: 30-11-51-01 30-21-51-01 33-13-01-70	121503 904949	1

MISSING ITEM NUMBERS NOT APPLICABLE

– ITEM NOT ILLUSTRATED

BOEING PROPRIETARY - Copyright © - Unpublished Work - See title page for details.

FIG ITEM	PART NUMBER	1 2 3 4 5 6 7 NOMENCLATURE	EFFECT FROM TO	UNITS PER ASSY
7				
685	233N3204-1020	.PANEL ASSY-ANTI-ICE SUPPLIER CODE: V89954 ELECTRICAL EQUIP NUMBER: M10397 COMPONENT MAINT MANUAL REF: 30-11-72 POST ALERT SB: 33A0044 FOR OTHER SYS DETAILS SEE: 30-11-51-01 30-21-51-01 33-13-01-70	121503 904949	1
687	NAS514P632-5	..SCREW	121503 904949	3
690	233N3204-7	..BASEPLATE ASSY- SUPPLIER CODE: V89954	121503 904949	1
700	PFSC35-38ASEMB	...STUD ASSY- SUPPLIER CODE: V72794 SPECIFICATION NUMBER: BACS21DX1B	121503 904949	4
705	SF6G6CBB5D	...NUT SUPPLIER CODE: V12324 SPECIFICATION NUMBER: BACN10PA06-6	121503 904949	2
710	233N3204-8	...BASEPLATE- SUPPLIER CODE: V89954	121503 904949	1
715	NAS1801-06-5	..SCREW	121503 904949	3
720	MS35338-41	..WASHER	121503 904949	3
725	69B46200-11	..STANDOFF-	121503 904949	3
730	233N3250-56	..BRACKET-	121503 904949	1

MISSING ITEM NUMBERS NOT APPLICABLE

– ITEM NOT ILLUSTRATED

BOEING PROPRIETARY - Copyright © - Unpublished Work - See title page for details.

FIG ITEM	PART NUMBER	1 2 3 4 5 6 7 NOMENCLATURE	EFFECT FROM TO	UNITS PER ASSY
7				
735	233N3201-11	.PANEL ASSY-RAIN REPELLENT AND WIPER SUPPLIER CODE: V89954 ELECTRICAL EQUIP NUMBER: M10023 COMPONENT MAINT MANUAL REF: 30-42-01 QUALIFIED I/W DATA: 233N3201-11 PANEL ASSY T/W S233T100-1074 LIGHTPLATE AND BP248-127 KNOB IS I/W 233N3201-300 FOR OTHER SYS DETAILS SEE: 30-42-51-01 30-43-51-01 33-13-01-70	121503 904949	1
740	NAS514P632-5	..SCREW	121503 904949	3
741	233N3201-8	..BASEPLATE ASSY- SUPPLIER CODE: V89954	121503 904949	1
742	BACS21DD1B	...STUD ASSY SUPPLIER CODE: V08524 SPECIFICATION NUMBER: BACS21DD1B	121503 904949	4
743	BACP10U0262N	...BASEPLATE	121503 904949	1
745	SF6G6CBB5D	...NUT SUPPLIER CODE: V12324 SPECIFICATION NUMBER: BACN10PA06-6	121503 904949	3
750	NAS1801-6-5	..SCREW	121503 904949	3
755	MS35338-41	..WASHER	121503 904949	3
760	69B46200-5	..STANDOFF	121503 904949	3
765	233N3250-6	..BRACKET-CONN.	121503 904949	1

MISSING ITEM NUMBERS NOT APPLICABLE

— ITEM NOT ILLUSTRATED

BOEING PROPRIETARY - Copyright © - Unpublished Work - See title page for details.

FIG ITEM	PART NUMBER	1 2 3 4 5 6 7 NOMENCLATURE	EFFECT FROM TO	UNITS PER ASSY
7				
780	233N3210-15	.PANEL ASSY-ANTI-COLLISION LIGHTING SUPPLIER CODE: V89954 ELECTRICAL EQUIP NUMBER: M10396 COMPONENT MAINT MANUAL REF: 33-44-71 QUALIFIED I/W DATA: 233N3210-13 -14 -15 -16 ARE ALL INTERCHANGEABLE EXCEPT SUBJECT TO CUSTOMER PREFERENCE FOR OTHER SYS DETAILS SEE: 33-13-01-70 33-41-52-01 33-42-52-01 33-43-51-01 33-44-51-01	121503 904949	1
783	NAS514P632-5	..SCREW	121503 904949	4
785	233N3210-7	..BASEPLATE ASSY- SUPPLIER CODE: V89954	121503 904949	1
795	BACS21DD1B	...STUD ASSY SUPPLIER CODE: V08524 SPECIFICATION NUMBER: BACS21DD1B	121503 904949	4
805	SF6G6CBB5D	...NUT SUPPLIER CODE: V12324 SPECIFICATION NUMBER: BACN10PA06-6	121503 904949	4
810	233N3210-8	...BASEPLATE- SUPPLIER CODE: V89954	121503 904949	1
815	MS51957-28	..SCREW-	121503 904949	4
820	NAS620-6	..WASHER	121503 904949	8
825	MS35338-41	..WASHER-	121503 904949	4
830	233N3250-41	..BRACKET	121503 904949	1
835	69B46200-5	..STANDOFF	121503 904949	2
840	233T6200-66	..STANDOFF	121503 904949	2

MISSING ITEM NUMBERS NOT APPLICABLE

– ITEM NOT ILLUSTRATED

BOEING PROPRIETARY - Copyright © - Unpublished Work - See title page for details.

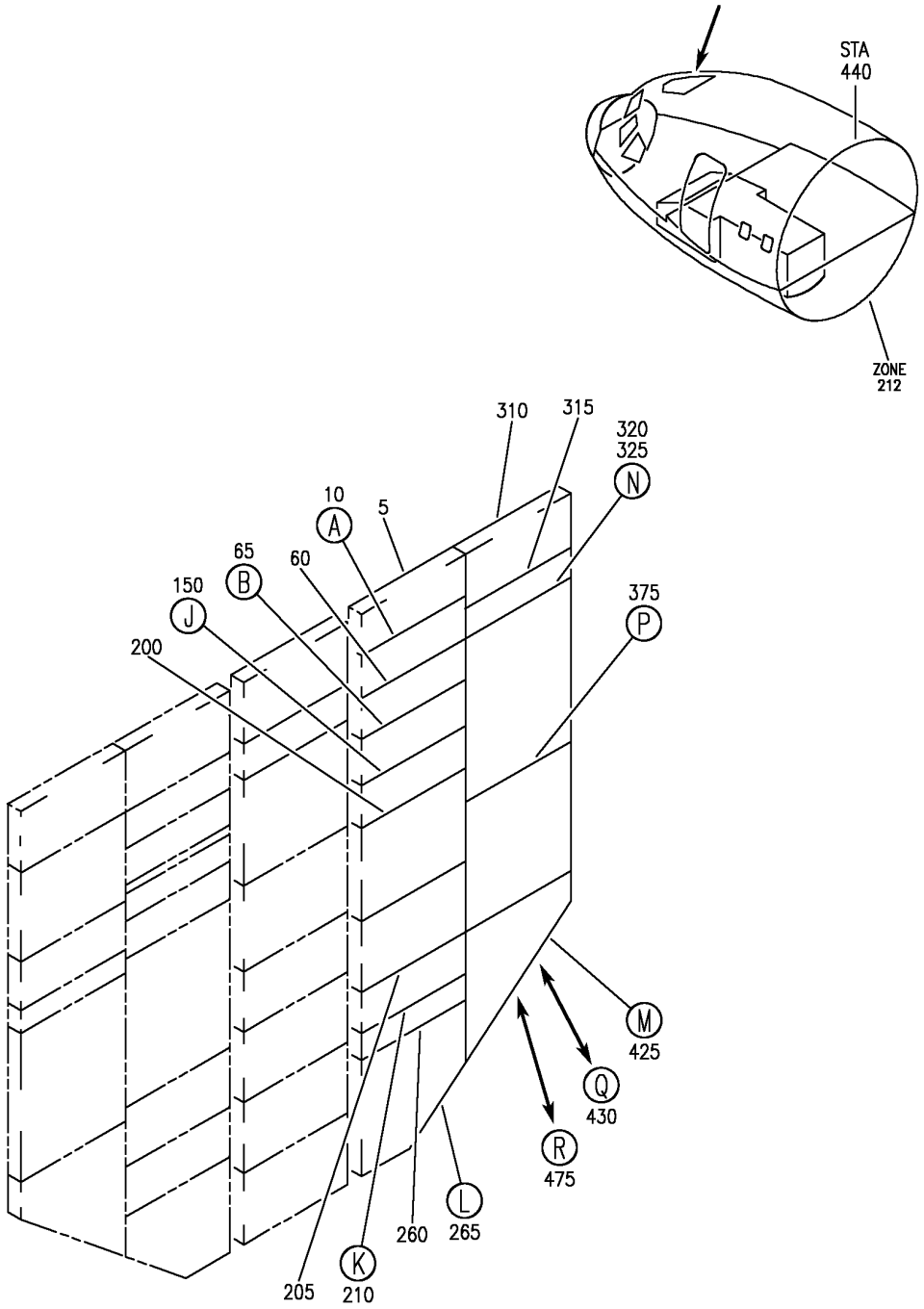

Y 31121107A SHT 1 REV 275

PANEL INSTL-P5 OVHD (INDICATING/RECORDING SYSTEMS ONLY)
FIGURE 7A (SHEET 1)

BOEING PROPRIETARY - Copyright © - Unpublished Work - See title page for details.

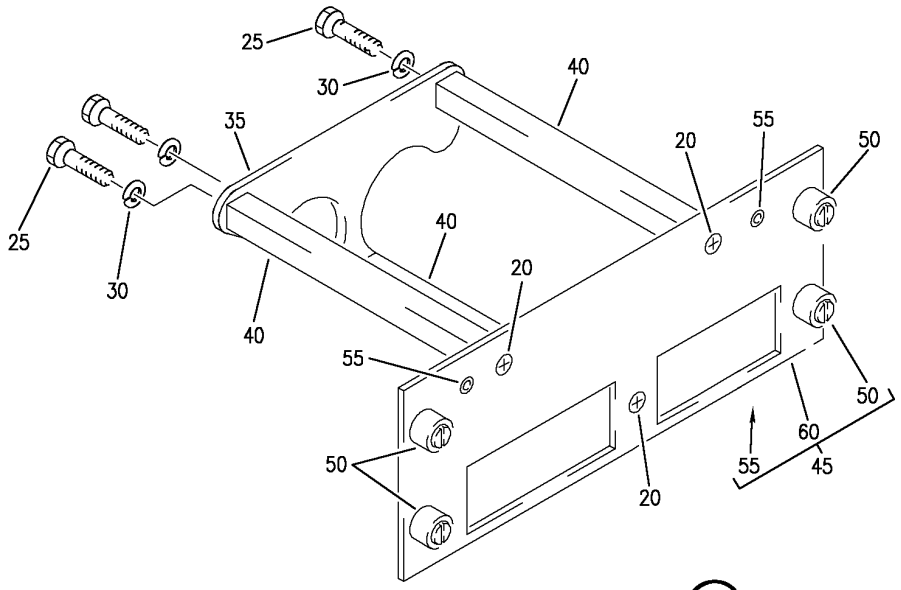

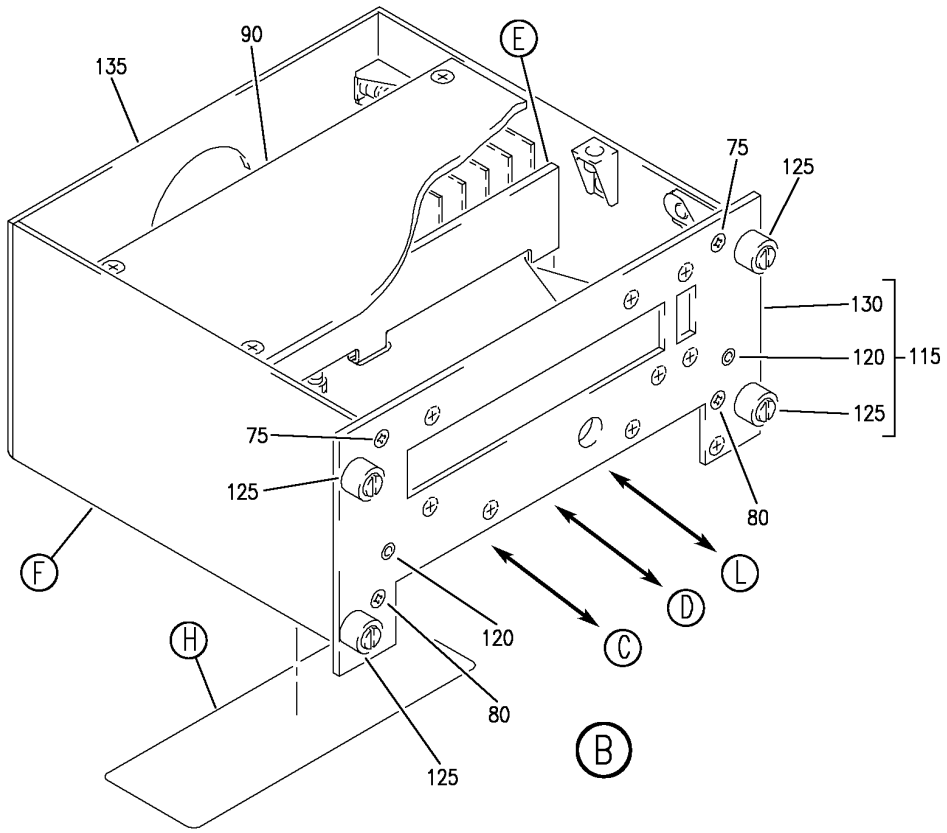

Y 31121107A SHT 2 REV 331

PANEL INSTL-P5 OVHD (INDICATING/RECORDING SYSTEMS ONLY)
FIGURE 7A (SHEET 2)

BOEING PROPRIETARY - Copyright © - Unpublished Work - See title page for details.

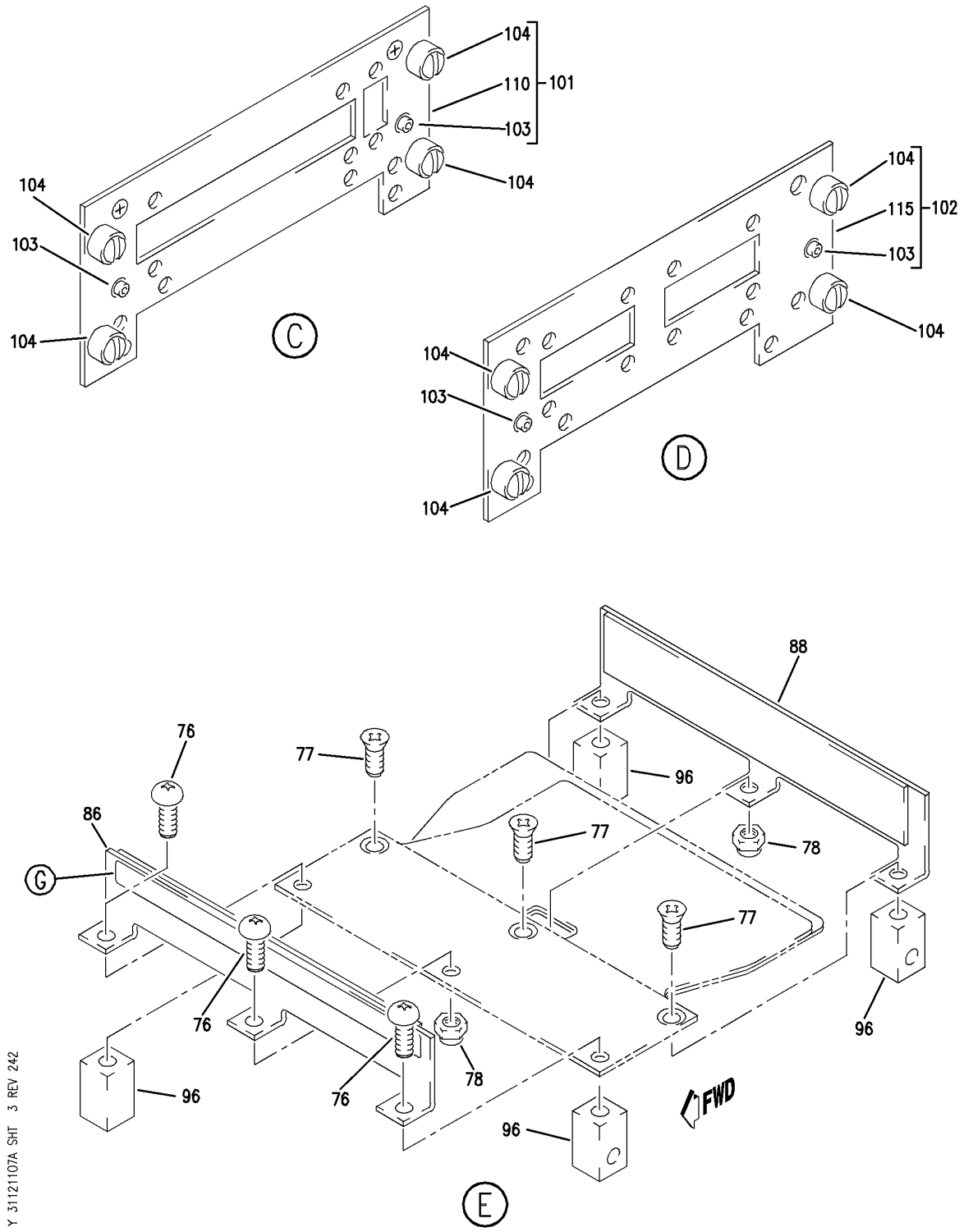

PANEL INSTL-P5 OVHD (INDICATING/RECORDING SYSTEMS ONLY)
FIGURE 7A (SHEET 3)

BOEING PROPRIETARY - Copyright © - Unpublished Work - See title page for details.

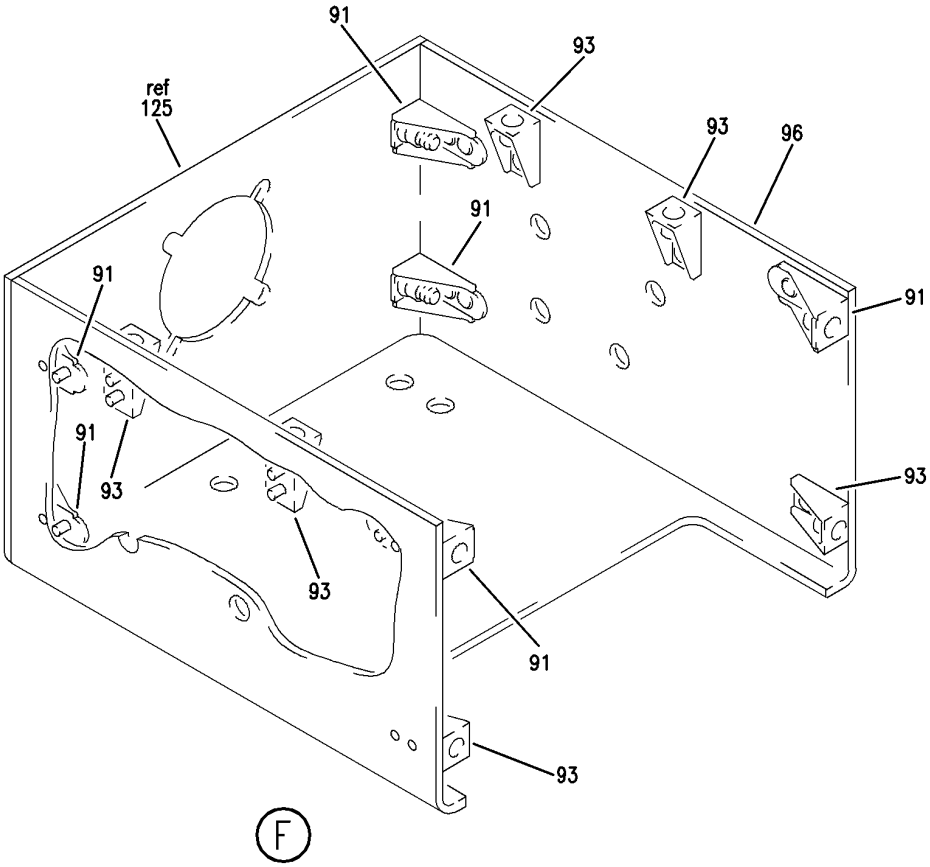

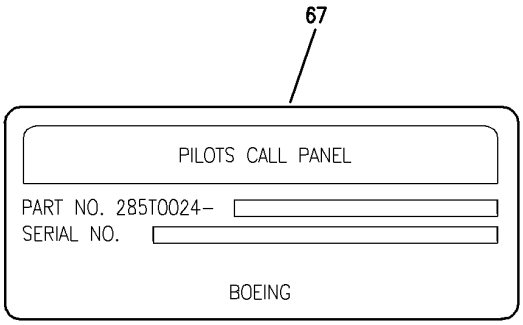

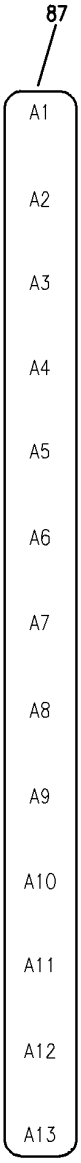

Y 31121107A SHT 4 REV 242

PANEL INSTL-P5 OVHD (INDICATING/RECORDING SYSTEMS ONLY)
FIGURE 7A (SHEET 4)

BOEING PROPRIETARY - Copyright © - Unpublished Work - See title page for details.

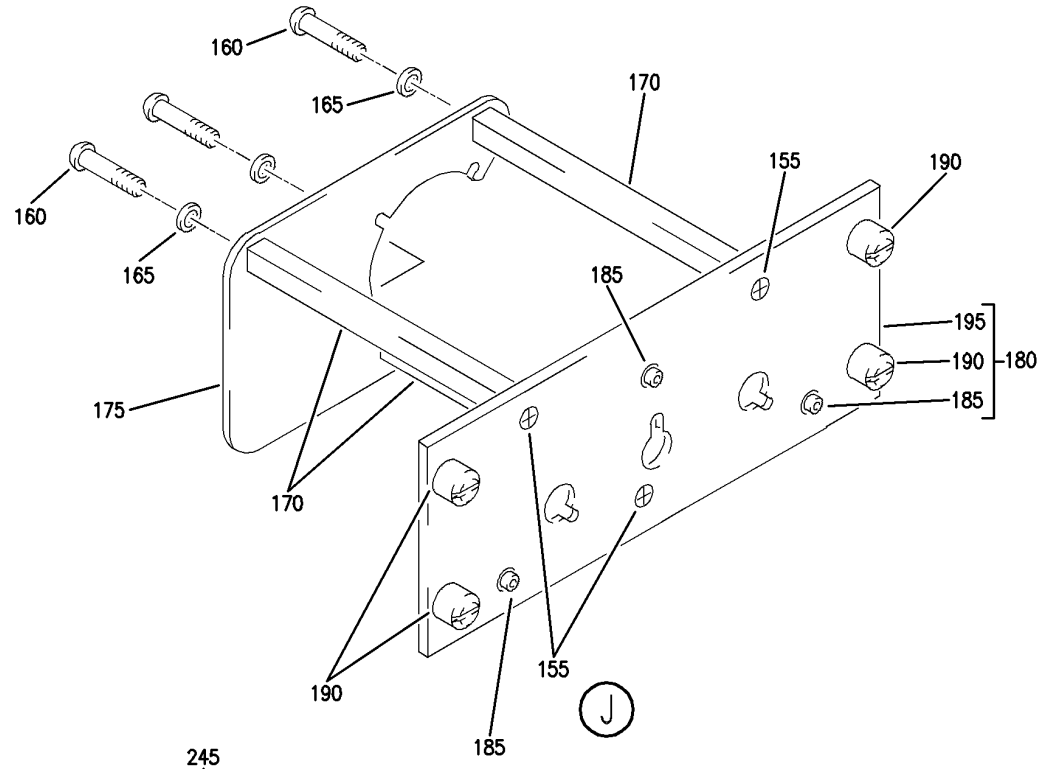

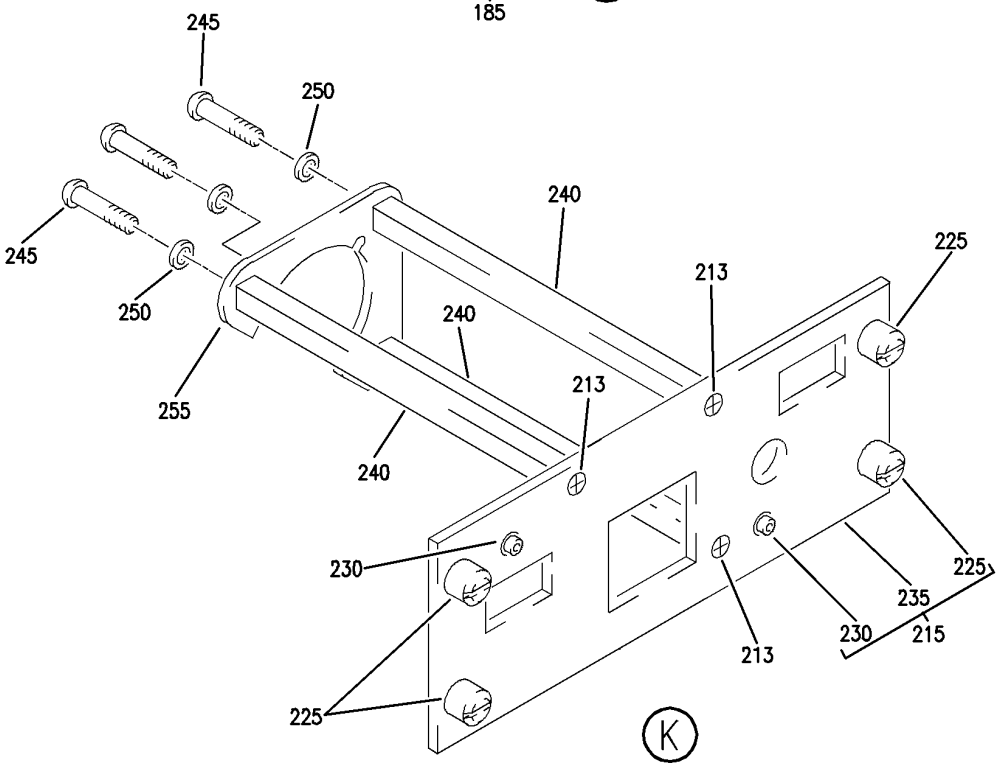

Y 31121107A SHT 5 REV 242

PANEL INSTL-P5 OVHD (INDICATING/RECORDING SYSTEMS ONLY)
FIGURE 7A (SHEET 5)

BOEING PROPRIETARY - Copyright © - Unpublished Work - See title page for details.

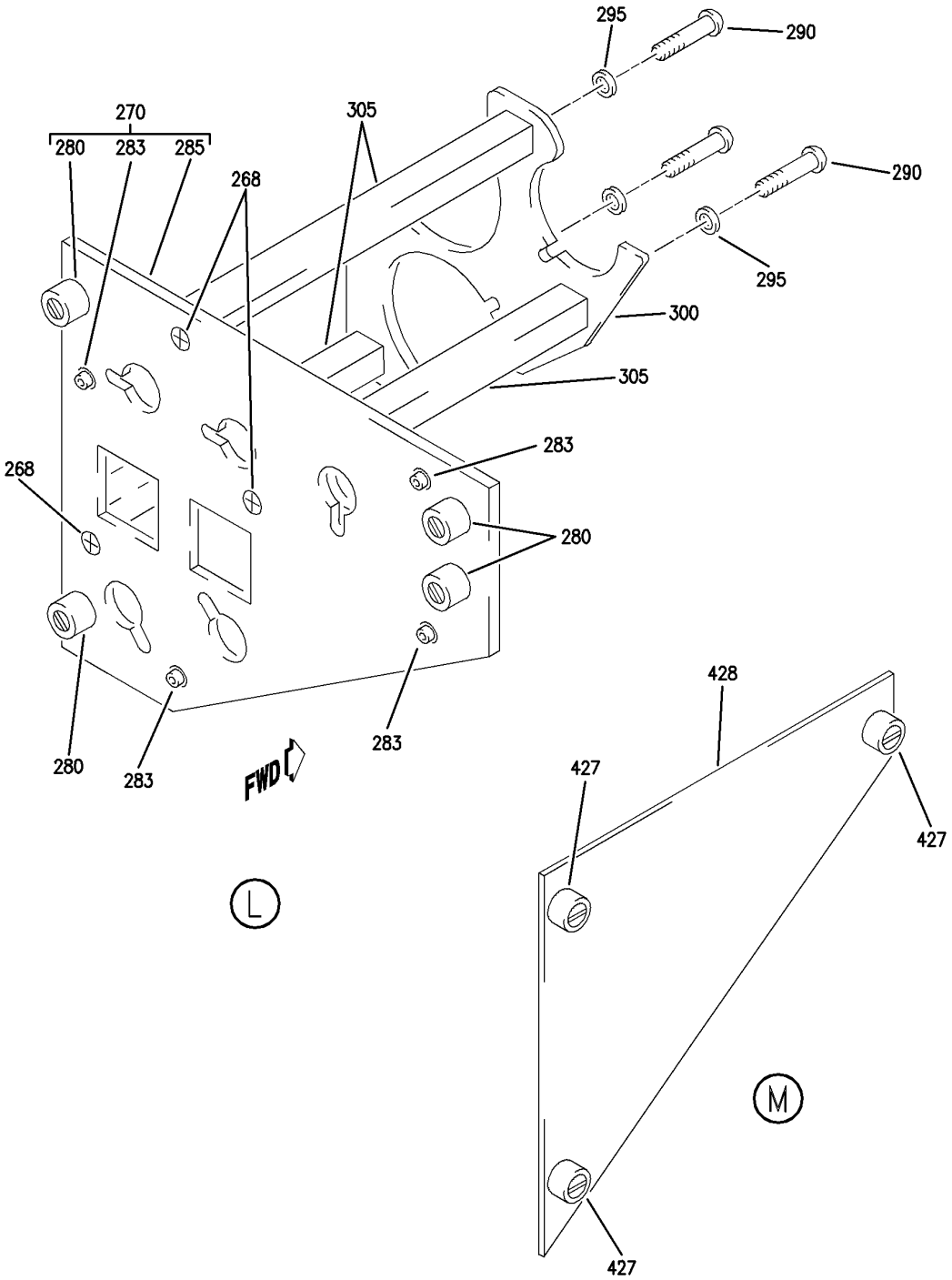

PANEL INSTL-P5 OVHD (INDICATING/RECORDING SYSTEMS ONLY)
FIGURE 7A (SHEET 6)

BOEING PROPRIETARY - Copyright © - Unpublished Work - See title page for details.

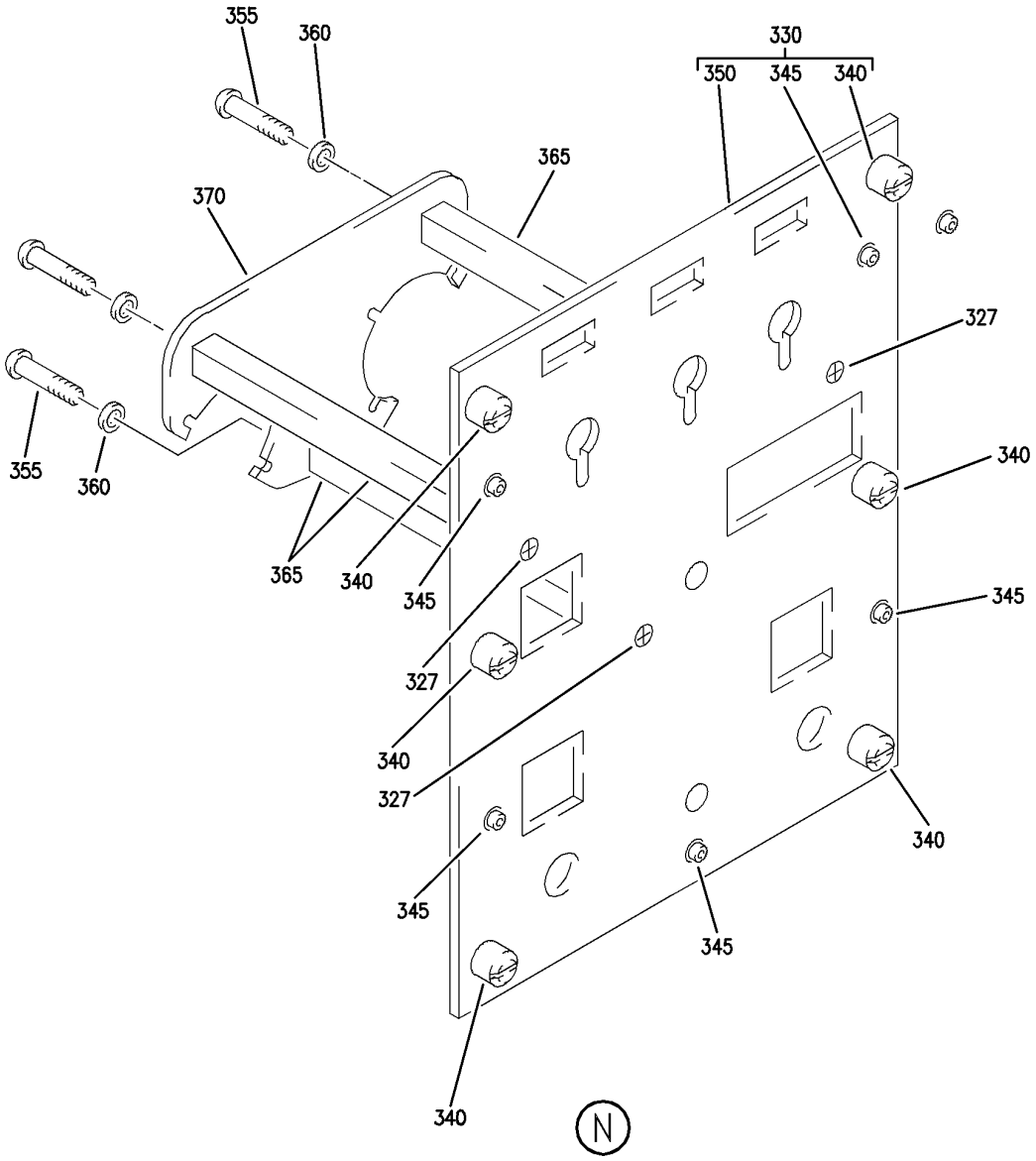

Y 31121107A SHT 7 REV 242

PANEL INSTL-P5 OVHD (INDICATING/RECORDING SYSTEMS ONLY)
FIGURE 7A (SHEET 7)

BOEING PROPRIETARY - Copyright © - Unpublished Work - See title page for details.

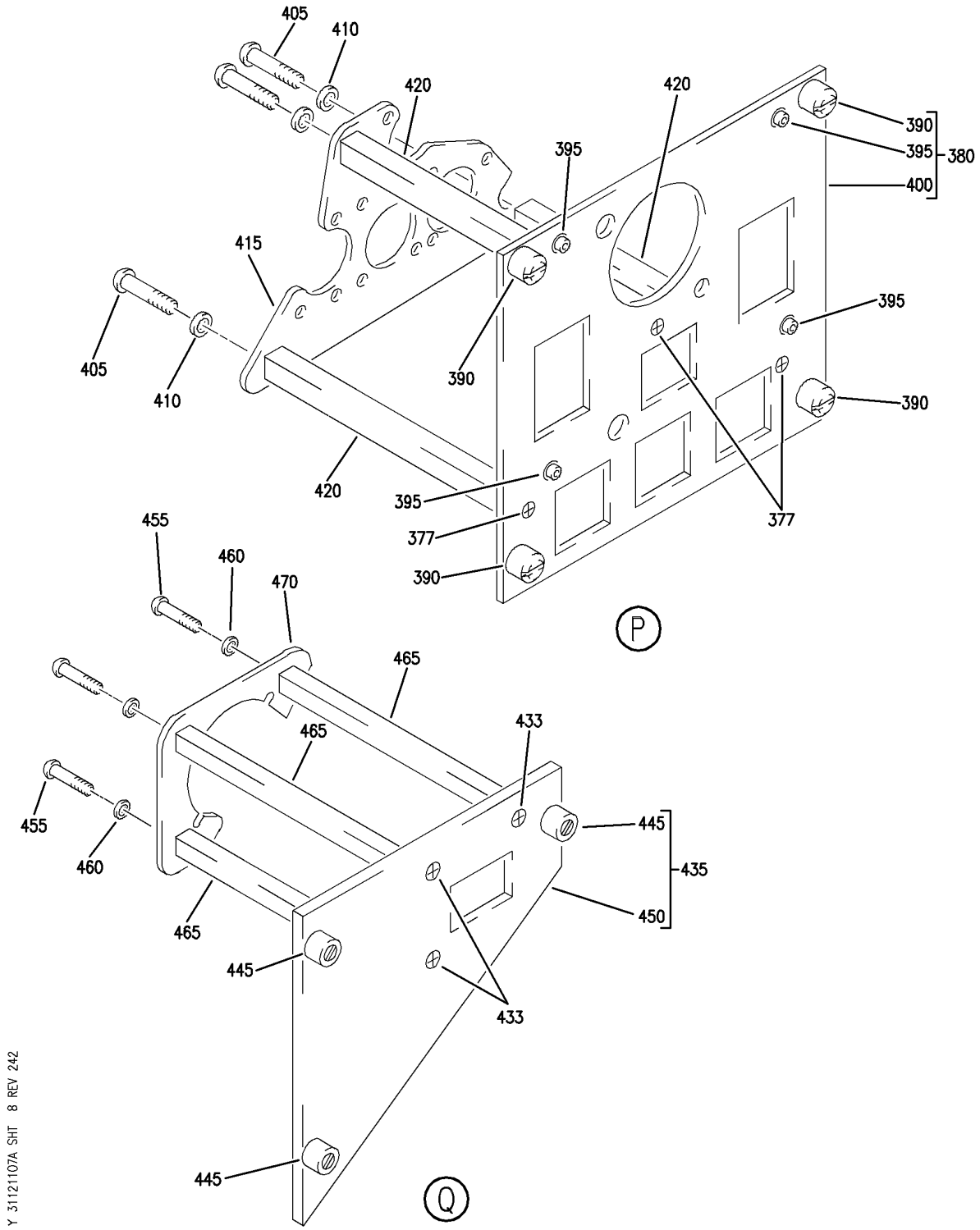

PANEL INSTL-P5 OVHD (INDICATING/RECORDING SYSTEMS ONLY)
FIGURE 7A (SHEET 8)

BOEING PROPRIETARY - Copyright © - Unpublished Work - See title page for details.

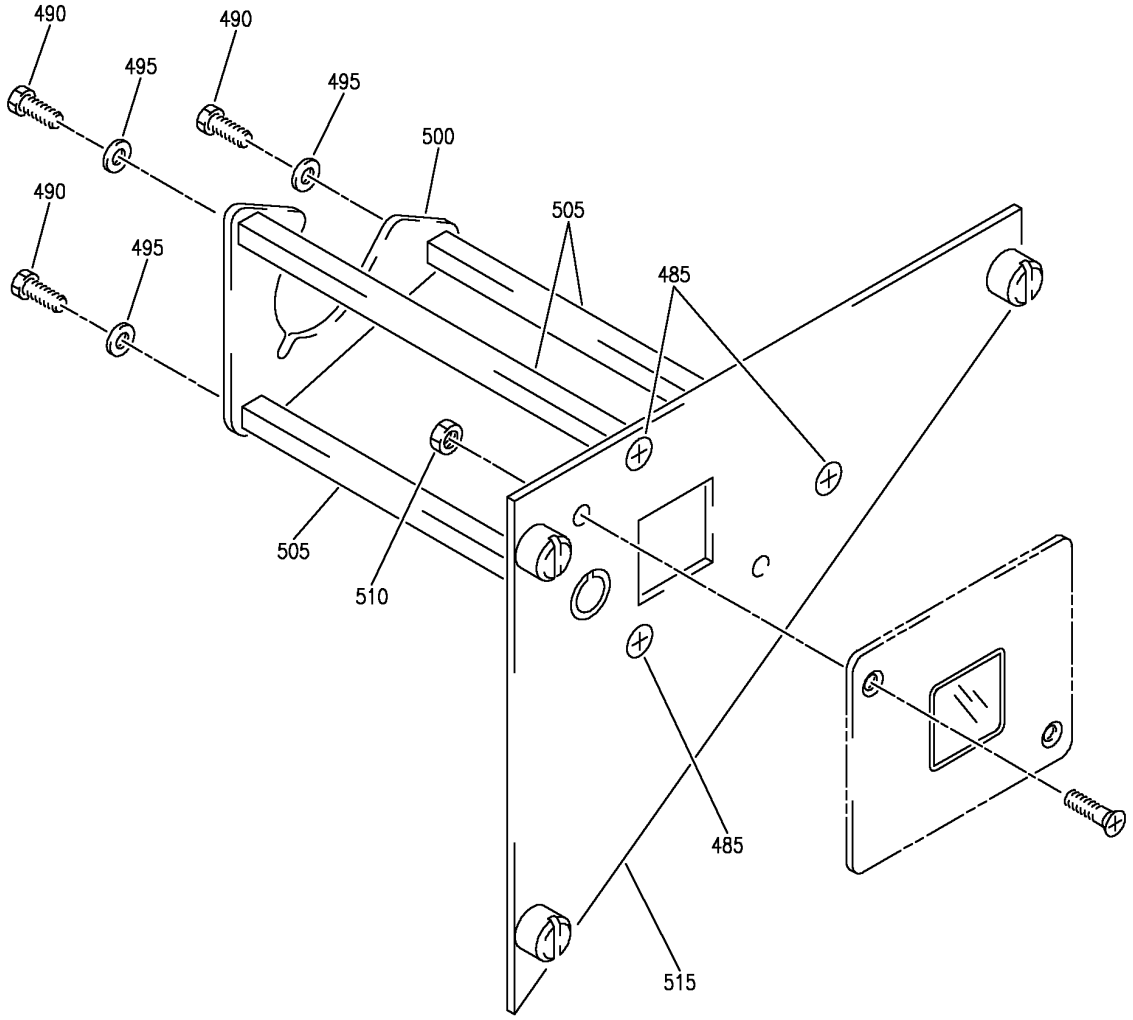

Y 31121107A SHT 9 REV 275

PANEL INSTL-P5 OVHD (INDICATING/RECORDING SYSTEMS ONLY)
FIGURE 7A (SHEET 9)

BOEING PROPRIETARY - Copyright © - Unpublished Work - See title page for details.

FIG ITEM	PART NUMBER	1 2 3 4 5 6 7 NOMENCLATURE	EFFECT FROM TO	UNITS PER ASSY
7A				
		PANEL INSTL-P5 OVHD (INDICATING/RECORDING SYSTEMS ONLY)	121503 904949	
- 1	233N3101-1	PANEL INSTL-P5 OVHD (INDICATING/RECORDING SYSTEMS ONLY) VARIABLE DRAWING REF: 233N3101-5025 FOR NHA/OTHER SYS DET SEE: 25-10-00-05A	121503 904949	RF
5	BACP10U0262T	.PANEL	121503 904949	1
10	233N3212-13	.PANEL ASSY-WINDOW HEAT SUPPLIER CODE: V89954 ELECTRICAL EQUIP NUMBER: M10395 COMPONENT MAINT MANUAL REF: 30-41-71 QUALIFIED I/W DATA: 233N3212-8 -10 -11 -12 -13 ARE ALL INTERCHANGEABLE EXCEPT SUBJECT TO CUSTOMER PREFERENCE FOR OTHER SYS DETAILS SEE: 30-41-51-01 33-13-01-70	121503 904949	1
13	NAS514P632-5	..SCREW	121503 904949	3
15	233N3212-2	..BASEPLATE ASSY- SUPPLIER CODE: V89954	121503 904949	1
25	PFSC35-38ASEMB	...STUD ASSY- SUPPLIER CODE: V72794 SPECIFICATION NUMBER: BACS21DX1B	121503 904949	4
30	SF6G6CBB5D	...NUT SUPPLIER CODE: V12324 SPECIFICATION NUMBER: BACN10PA06-6	121503 904949	2
35	233N3212-3	...BASEPLATE- SUPPLIER CODE: V89954	121503 904949	1
40	NAS1801-06-5	..SCREW	121503 904949	3

MISSING ITEM NUMBERS NOT APPLICABLE

- ITEM NOT ILLUSTRATED

BOEING PROPRIETARY - Copyright © - Unpublished Work - See title page for details.

FIG ITEM	PART NUMBER	1 2 3 4 5 6 7 NOMENCLATURE	EFFECT FROM TO	UNITS PER ASSY
7A				
45	MS35338-41	..WASHER-	121503 904949	3
50	69B46200-12	..STANDOFF	121503 904949	3
55	233N3250-11	..BRACKET	121503 904949	1
60	BACP10U0262T	.PANEL-	904949	1
60	622-6827-002	.PANEL ASSY-HF CONT SUPPLIER CODE: V4V792 COMPONENT MAINT MANUAL REF: 23-10-73 POST RAPID REVISION: RR92031-3 FOR BREAKDOWN SEE: 23-11-02-01	121503	1
60	622-5432-002	.PANEL ASSY-HF CONT SUPPLIER CODE: V4V792 COMPONENT MAINT MANUAL REF: 23-10-71 FOR BREAKDOWN SEE: 23-11-02-01	121503	RF
65	285T0024-25	.MODULE ASSY-PILOT CALL PNL SUPPLIER CODE: V89954 ELECTRICAL EQUIP NUMBER: M00051 COMPONENT MAINT MANUAL REF: 23-42-59 FOR OTHER SYS DETAILS SEE: 11-31-10-01 23-42-02-01 33-13-01-70	121503 904949	1
67	BAC27TEX0933	..MARKER-ALUMINUM FOIL SUPPLIER CODE: V89954	121503 904949	1
70	NAS514P632-5	..SCREW	121503 904949	2
75	NAS514P440-5	..SCREW	121503 904949	2
76	MS35214-13	..SCREW	121503 904949	3
77	NAS514P440-5	..SCREW	121503 904949	3

MISSING ITEM NUMBERS NOT APPLICABLE

– ITEM NOT ILLUSTRATED

BOEING PROPRIETARY - Copyright © - Unpublished Work - See title page for details.

FIG ITEM	PART NUMBER	1 2 3 4 5 6 7 NOMENCLATURE	EFFECT FROM TO	UNITS PER ASSY
7A				
78	92-1660-40	..NUT	121503	2
		SUPPLIER CODE:	904949	
		V72962		
		SPECIFICATION NUMBER:		
		BACN10DN40		
		OPTIONAL PART:		
		92-1660-440		
		V15653		
80	285T0158-29	..COVER ASSY-	121503	1
		SUPPLIER CODE:	904949	
		V89954		
		ATTACHING PARTS		
- 85	NAS514P440-5	..SCREW	121503	4
			904949	
		-------*-------		
86	285T0158-25	..BRACKET ASSY-	121503	1
		SUPPLIER CODE:	904949	
		V89954		
87	BAC27TEX1986	...DECAL-	121503	1
		SUPPLIER CODE:	904949	
		V89954		
88	285T0158-27	..BRACKET ASSY-	121503	1
		SUPPLIER CODE:	904949	
		V89954		
90	285T0158-23	..BRACKET ASSY-	121503	1
		SUPPLIER CODE:	904949	
		V89954		
91	MF6000-06	...NUTPLATE	121503	6
		SUPPLIER CODE:	904949	
		V15653		
		SPECIFICATION NUMBER:		
		BACN10KJ06		
		ATTACHING PARTS		
- 92	BACR15BA3AD	...RIVET-	121503	12
		SIZE DETERMINED ON INSTL.	904949	
		-------*-------		
93	F22A27M22-40	...NUT-	121503	6
		SUPPLIER CODE:	904949	
		V0217B		
		ATTACHING PARTS		
- 94	BACR15BA2AD	...RIVET-	121503	12
		SIZE DETERMINED ON INSTL.	904949	
		-------*-------		
95	285T0158-22	...BRACKET-	121503	1
		SUPPLIER CODE:	904949	
		V89954		
96	285T0158-21	..BLOCK-MTG	121503	4
		SUPPLIER CODE:	904949	
		V89954		

MISSING ITEM NUMBERS NOT APPLICABLE

- ITEM NOT ILLUSTRATED

BOEING PROPRIETARY - Copyright © - Unpublished Work - See title page for details.

FIG ITEM	PART NUMBER	1 2 3 4 5 6 7 NOMENCLATURE	EFFECT FROM TO	UNITS PER ASSY
7A				
		ATTACHING PARTS		
- 97	NAS514P440-5	..SCREW	121503 904949	4
		-------*-------		
102	285T0157-5	..PANEL ASSY- SUPPLIER CODE: V89954	121503 904949	1
103	SF6G6CBB5D	...NUT SUPPLIER CODE: V12324 SPECIFICATION NUMBER: BACN10PA06-6	121503 904949	2
104	PFSC35-38ASEMB	...STUD ASSY SUPPLIER CODE: V72794 SPECIFICATION NUMBER: BACS21DX1B	121503 904949	4
115	285T0157-12	...PANEL- SUPPLIER CODE: V89954	121503 904949	1
120	NAS1801-06-5	..SCREW	121503 904949	4
125	285T0158-7	..PANEL- SUPPLIER CODE: V89954	121503 904949	1
150	233T3216-10	.PANEL ASSY-PASS. SIGN CONT SUPPLIER CODE: V89954 ELECTRICAL EQUIP NUMBER: M00052 FOR OTHER SYS DETAILS SEE: 33-13-01-70 33-24-51-01	121503 904949	1
155	NAS514P632-5	..SCREW	121503 904949	3
160	NAS1801-6-5	..SCREW	121503 904949	3
165	MS35338-41	..WASHER	121503 904949	3
170	69B46200-9	..STANDOFF	121503 904949	3
175	233T6200-85	..BRACKET-SPRT	121503 904949	1
180	233T3216-2	..BASEPLATE ASSY- SUPPLIER CODE: V89954	121503 904949	1

MISSING ITEM NUMBERS NOT APPLICABLE

- ITEM NOT ILLUSTRATED

BOEING PROPRIETARY - Copyright © - Unpublished Work - See title page for details.

FIG ITEM	PART NUMBER	1 2 3 4 5 6 7 NOMENCLATURE	EFFECT FROM TO	UNITS PER ASSY
7A				
185	SF6G6CBB5D	...NUT SUPPLIER CODE: V12324 SPECIFICATION NUMBER: BACN10PA06-6	121503 904949	3
190	BACS21DD1B	...STUD ASSY SUPPLIER CODE: V08524 SPECIFICATION NUMBER: BACS21DD1B	121503 904949	4
195	233T3216-3	...BASEPLATE- SUPPLIER CODE: V89954	121503 904949	1
200	130502-4	.PANEL ASSY-CAB. ALTITUDE CONT SUPPLIER CODE: V64547 SPECIFICATION NUMBER: S210T160-42 COMPONENT MAINT MANUAL REF: 21-31-50 OPTIONAL PART: 130502-5 V64547 FOR BREAKDOWN SEE: 21-31-01-01	121503 904949	RF
200	130502-5	.PANEL ASSY-CAB. ALTITUDE CONT SUPPLIER CODE: V64547 SPECIFICATION NUMBER: S210T160-52 COMPONENT MAINT MANUAL REF: 21-31-50 OPTIONAL PART: 130502-4 V64547 FOR BREAKDOWN SEE: 21-31-01-01	121503 904949	RF
200	130502-6	.PANEL ASSY-CAB. ALTITUDE CONT SUPPLIER CODE: V64547 SPECIFICATION NUMBER: S210T160-62 COMPONENT MAINT MANUAL REF: 21-31-50 FOR BREAKDOWN SEE: 21-31-01-01	121503 904949	RF

MISSING ITEM NUMBERS NOT APPLICABLE

— ITEM NOT ILLUSTRATED

BOEING PROPRIETARY - Copyright © - Unpublished Work - See title page for details.

FIG ITEM	PART NUMBER	1 2 3 4 5 6 7 NOMENCLATURE	EFFECT FROM TO	UNITS PER ASSY
7A				
200	130502-7	.PANEL ASSY-CAB. ALTITUDE CONT SUPPLIER CODE: V64547 FUNCTIONAL DESCRIPTION: SELECTOR CONTAINS CONTROLS AND CIRCUITRY NECESSARY FOR AUTOMATIC OR MANUAL PRESSURE SELECTION SPECIFICATION NUMBER: S210T160-72 COMPONENT MAINT MANUAL REF: 21-31-50 FOR BREAKDOWN SEE: 21-31-01-01	121503 904949	RF
205	SETLOC420L	.PANEL ASSY-CAB. PRESSURE GAUGES SUPPLIER CODE: V61349 SPECIFICATION NUMBER: S231N210-15 COMPONENT MAINT MANUAL REF: 21-33-07 QUALIFIED I/W DATA: INSTALLED AS A SET, PT033D T/W SETLOC420M OR SETLOC420L, I/W PT033A T/W SETLOC420H FOR BREAKDOWN SEE: 21-33-51-01	121503 904949	RF

MISSING ITEM NUMBERS NOT APPLICABLE

– ITEM NOT ILLUSTRATED

BOEING PROPRIETARY - Copyright © - Unpublished Work - See title page for details.

FIG ITEM	PART NUMBER	1 2 3 4 5 6 7 NOMENCLATURE	EFFECT FROM TO	UNITS PER ASSY
7A				
210	233N3203-34	.PANEL ASSY-EQPT COOLING SUPPLIER CODE: V89954 ELECTRICAL EQUIP NUMBER: M10067 COMPONENT MAINT MANUAL REF: 21-58-71 QUALIFIED I/W DATA: 233N3203-26 -27 -32 -33 -34 ARE ALL INTERCHANGEABLE EXCEPT SUBJECT TO CUSTOMER PREFERENCE PRE ALERT SB: 33A0044R1 FOR OTHER SYS DETAILS SEE: 21-33-51-01 21-58-19-11 21-58-51-01 33-13-01-70	121503 904949	1
210	233N3203-1034	.PANEL ASSY-XPT COOLING SUPPLIER CODE: V89954 ELECTRICAL EQUIP NUMBER: M10067 COMPONENT MAINT MANUAL REF: 21-58-71 POST ALERT SB: 33A0044R1 FOR OTHER SYS DETAILS SEE: 21-33-51-01 21-58-19-11 21-58-51-01 33-13-01-70	121503 904949	1
213	NAS514P632-6	..SCREW	121503 904949	3
215	233N3203-19	..BASEPLATE ASSY- SUPPLIER CODE: V89954	121503 904949	1
225	PFSC35-38ASEMB	...STUD ASSY- SUPPLIER CODE: V72794 SPECIFICATION NUMBER: BACS21DX1B	121503 904949	4
230	SF6G6CBB5D	...NUT SUPPLIER CODE: V12324 SPECIFICATION NUMBER: BACN10PA06-6	121503 904949	2

MISSING ITEM NUMBERS NOT APPLICABLE

— ITEM NOT ILLUSTRATED

BOEING PROPRIETARY - Copyright © - Unpublished Work - See title page for details.

FIG ITEM	PART NUMBER	1 2 3 4 5 6 7 NOMENCLATURE	EFFECT FROM TO	UNITS PER ASSY
7A				
235	233N3203-21	...BASEPLATE-	121503	1
		SUPPLIER CODE:	904949	
		V89954		
240	69B46200-11	..STANDOFF	121503	3
			904949	
		ATTACHING PARTS		
245	BACS12HN06-5	..SCREW-	121503	3
			904949	
250	BACW10EC06S	..WASHER-	121503	3
			904949	
		-------*-------		
255	233N3250-10	..BRACKET	121503	1
			904949	
260	BACP10U0112T	.PANEL ASSY	121503	1
			904949	
265	233N3221-60	.PANEL ASSY-LIGHTING CONT	121503	1
		SUPPLIER CODE:	904949	
		V89954		
		POSITION DATA:		
		R		
		ELECTRICAL EQUIP NUMBER:		
		M10057		
		COMPONENT MAINT MANUAL REF:		
		33-11-72		
		FOR OTHER SYS DETAILS SEE:		
		33-11-51-14		
		33-13-01-70		
		33-13-02-01		
		33-16-51-01		
		52-51-51-01		
268	NAS514P632-5	..SCREW	121503	3
			904949	
270	233N3221-33	..BASEPLATE ASSY-	121503	1
		SUPPLIER CODE:	904949	
		V89954		
280	BACS21DD1B	...STUD ASSY-	121503	4
		SUPPLIER CODE:	904949	
		V08524		
		SPECIFICATION NUMBER:		
		BACS21DD1B		
		OPTIONAL PART:		
		BACS21DX1B		
280	PFSC35-38ASEMB	...STUD ASSY-	121503	4
		SUPPLIER CODE:	904949	
		V72794		
		SPECIFICATION NUMBER:		
		BACS21DX1B		
		OPTIONAL PART:		
		BACS21DD1B		

MISSING ITEM NUMBERS NOT APPLICABLE

– ITEM NOT ILLUSTRATED

BOEING PROPRIETARY - Copyright © - Unpublished Work - See title page for details.

FIG ITEM	PART NUMBER	1 2 3 4 5 6 7 NOMENCLATURE	EFFECT FROM TO	UNITS PER ASSY
7A				
283	SF6G6CBB5D	...NUT SUPPLIER CODE: V12324 SPECIFICATION NUMBER: BACN10PA06-6	121503 904949	4
285	233N3221-37	...BASEPLATE- SUPPLIER CODE: V89954	121503 904949	1
290	BACS12HN06-5	..SCREW-	121503 904949	3
295	BACW10EC06S	..WASHER-	121503 904949	3
300	233N3250-48	..BRACKET	121503 904949	1
305	69B46200-12	..STANDOFF	121503 904949	3
310	BACP10U0300T	.PANEL ASSY	121503 904949	1
315	20-210-01	.INDICATOR ASSY-COMPT TEMP SUPPLIER CODE: V35012 SPECIFICATION NUMBER: S231N211-2 ELECTRICAL EQUIP NUMBER: M10078 COMPONENT MAINT MANUAL REF: 21-65-01 FOR BREAKDOWN SEE: 21-65-51-01	121503 904949	1
315	2263-01-1	.INDICATOR ASSY-COMPT TEMP SUPPLIER CODE: V52013 FUNCTIONAL DESCRIPTION: INDICATOR SHOWS COMPARTMENT TEMPERATURE FOR EA OF THE THREE CABIN ZONES SPECIFICATION NUMBER: S231N211-3 ELECTRICAL EQUIP NUMBER: M10078 COMPONENT MAINT MANUAL REF: 21-61-02 FOR BREAKDOWN SEE: 21-65-51-01	121503 904949	1

MISSING ITEM NUMBERS NOT APPLICABLE

– ITEM NOT ILLUSTRATED

BOEING PROPRIETARY - Copyright © - Unpublished Work - See title page for details.

FIG ITEM	PART NUMBER	1 2 3 4 5 6 7 NOMENCLATURE	EFFECT FROM TO	UNITS PER ASSY
7A				
325	233N3217-17	.PANEL ASSY-AIR CONDITIONING CONT SUPPLIER CODE: V89954 ELECTRICAL EQUIP NUMBER: M10193 COMPONENT MAINT MANUAL REF: 21-51-71 QUALIFIED I/W DATA: 233N3217-8 -11 -15 -16 -17 ARE ALL INTERCHANGEABLE EXCEPT SUBJECT TO CUSTOMER PREFERENCE FOR OTHER SYS DETAILS SEE: 21-25-55-01 21-51-54-01 21-61-04-01 33-13-01-70	121503 904949	1
327	NAS514P632-5	..SCREW	121503 904949	3
330	233N3217-2	..BASEPLATE ASSY- SUPPLIER CODE: V89954 OPTIONAL PART: 233N3217-9 V89954	121503 904949	1
330	233N3217-9	..BASEPLATE ASSY- SUPPLIER CODE: V89954 OPTIONAL PART: 233N3217-2 V89954	121503 904949	1
340	PFSC35-38ASEMB	...STUD ASSY- SUPPLIER CODE: V72794 SPECIFICATION NUMBER: BACS21DX1B	121503 904949	6
345	SF6G6CBB5D	...NUT SUPPLIER CODE: V12324 SPECIFICATION NUMBER: BACN10PA06-6	121503 904949	5
350	233N3217-3	...BASEPLATE- SUPPLIER CODE: V89954 USED ON: 233N3217-2	121503 904949	1

MISSING ITEM NUMBERS NOT APPLICABLE

— ITEM NOT ILLUSTRATED

BOEING PROPRIETARY - Copyright © - Unpublished Work - See title page for details.

FIG ITEM	PART NUMBER	1 2 3 4 5 6 7 NOMENCLATURE	EFFECT FROM TO	UNITS PER ASSY
7A				
350	233N3217-10	...BASEPLATE- SUPPLIER CODE: V89954 USED ON: 233N3217-9	121503 904949	1
355	BACS12HN06-5	..SCREW-	121503 904949	3
360	BACW10EC06S	..WASHER-	121503 904949	3
365	69B46200-14	..STANDOFF	121503 904949	3
370	233N3250-13	..BRACKET	121503 904949	1
375	233N3215-19	.PANEL ASSY-BLEED AIR SUPPLIER CODE: V89954 ELECTRICAL EQUIP NUMBER: M10259 COMPONENT MAINT MANUAL REF: 36-11-71 QUALIFIED I/W DATA: 233N3215-9 -15 -19 -20 ARE ALL INTERCHANGEABLE EXCEPT SUBJECT TO CUSTOMER PREFERENCE PRE ALERT SB: 33A0044R1 FOR OTHER SYS DETAILS SEE: 26-18-51-02 33-13-01-70 36-11-04-02 36-21-00-02 36-21-02-03 36-22-51-01 49-52-00-02 75-32-00-02	121503 904949	1

MISSING ITEM NUMBERS NOT APPLICABLE

– ITEM NOT ILLUSTRATED

BOEING PROPRIETARY - Copyright © - Unpublished Work - See title page for details.

FIG ITEM	PART NUMBER	1 2 3 4 5 6 7 NOMENCLATURE	EFFECT FROM TO	UNITS PER ASSY
7A				
375	233N3215-1019	.PANEL ASSY-BLEED AIR SUPPLIER CODE: V89954 ELECTRICAL EQUIP NUMBER: M10259 COMPONENT MAINT MANUAL REF: 36-11-71 QUALIFIED I/W DATA: 233N3215-1009,-1015, -1019 AND -1020 ARE INTERCHANGEABLE PER CUSTOMER PREFERENCE. POST ALERT SB: 33A0044R1 FOR OTHER SYS DETAILS SEE: 26-18-51-02 33-13-01-70 36-11-04-02 36-21-00-02 36-21-02-03 36-22-51-01 49-52-00-02 75-32-00-02	121503 904949	1
377	NAS514P632-5	..SCREW	121503 904949	3
380	233N3215-10	..BASEPLATE ASSY- SUPPLIER CODE: V89954	121503 904949	1
390	PFSC35-38ASEMB	...STUD ASSY- SUPPLIER CODE: V72794 SPECIFICATION NUMBER: BACS21DX1B	121503 904949	4
395	SF6G6CBB5D	...NUT SUPPLIER CODE: V12324 SPECIFICATION NUMBER: BACN10PA06-6	121503 904949	4
400	233N3215-11	...BASEPLATE- SUPPLIER CODE: V89954	121503 904949	1
405	NAS1801-04-6	..SCREW	121503 904949	3
410	MS35338-41	..WASHER	121503 904949	3
415	233N3250-39	..BRACKET-SPRT	121503 904949	1
420	69B46200-11	..STANDOFF	121503 904949	3

MISSING ITEM NUMBERS NOT APPLICABLE

— ITEM NOT ILLUSTRATED

BOEING PROPRIETARY - Copyright © - Unpublished Work - See title page for details.

FIG ITEM	PART NUMBER	1 2 3 4 5 6 7 NOMENCLATURE	EFFECT FROM TO	UNITS PER ASSY
7A				
425	233T3200-1	.PANEL ASSY-	121503 904949	1
427	BACS21DD1B	..STUD ASSY SUPPLIER CODE: V08524 SPECIFICATION NUMBER: BACS21DD1B	121503 904949	3
428	233T3200-3	..BASEPLATE	121503 904949	1

MISSING ITEM NUMBERS NOT APPLICABLE

– ITEM NOT ILLUSTRATED

BOEING PROPRIETARY - Copyright © - Unpublished Work - See title page for details.

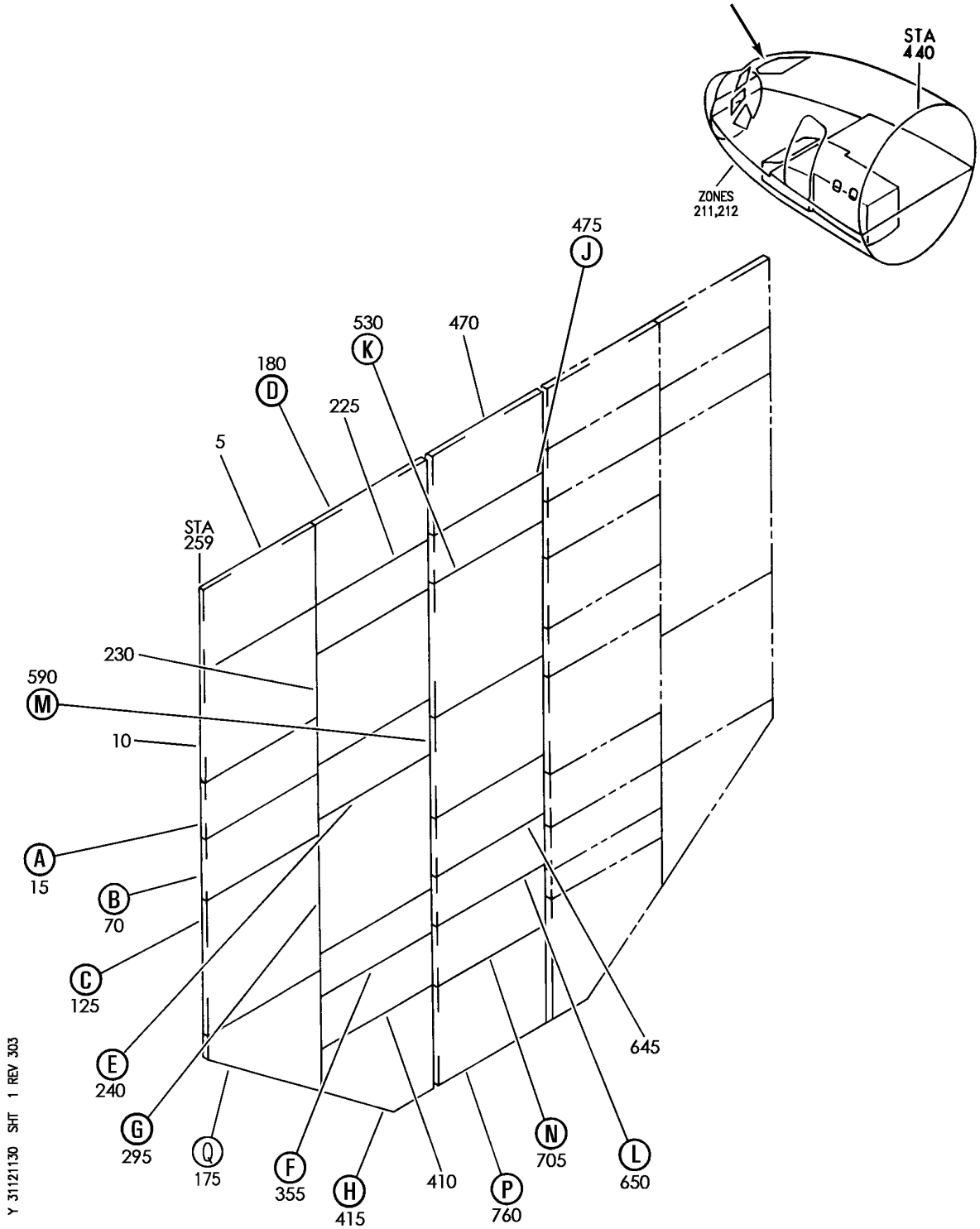

PANEL INSTL-P5 OVHD (INDICATING/RECORDING SYSTEMS ONLY)
FIGURE 30 (SHEET 1)

BOEING PROPRIETARY - Copyright © - Unpublished Work - See title page for details.

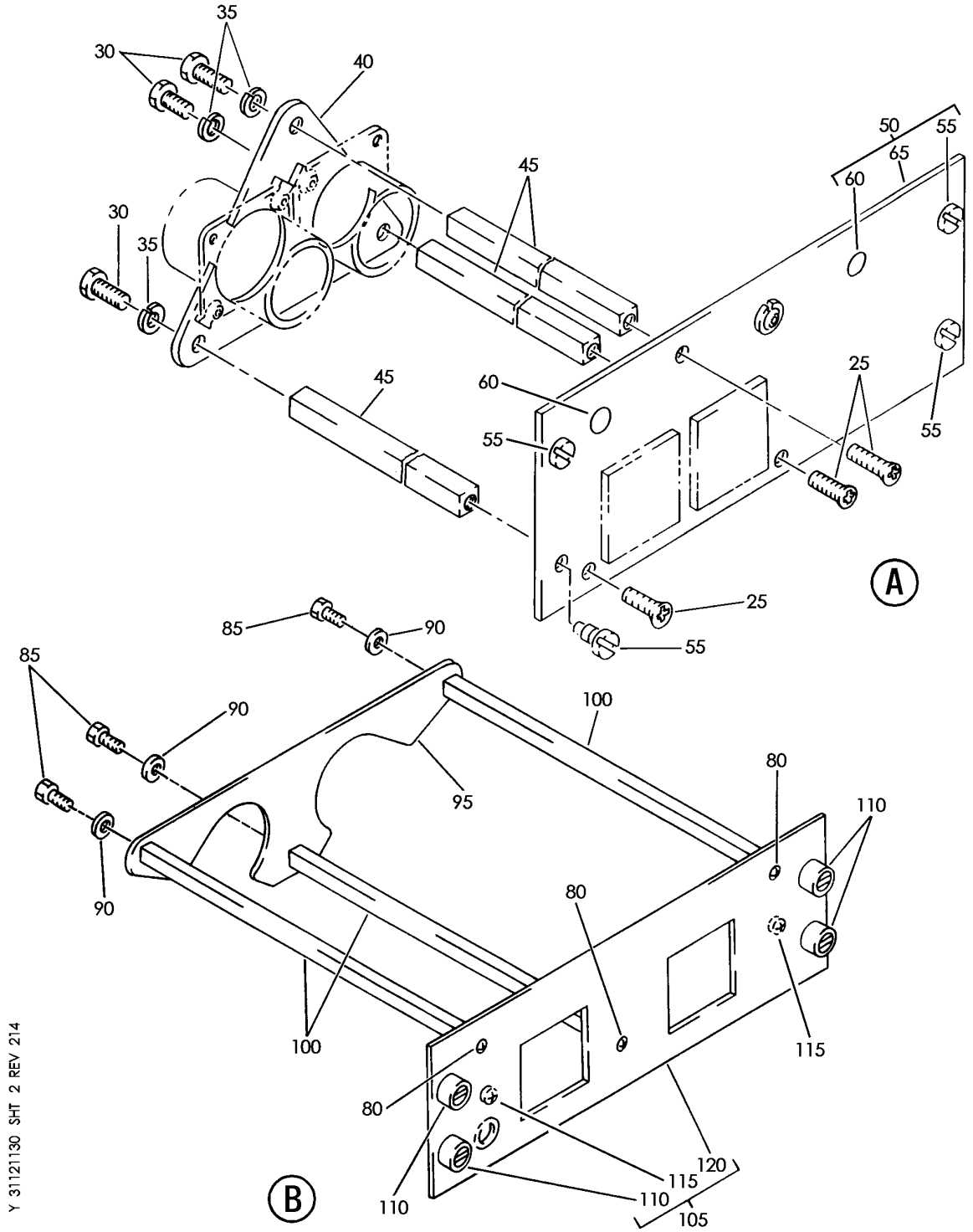

PANEL INSTL-P5 OVHD (INDICATING/RECORDING SYSTEMS ONLY)
FIGURE 30 (SHEET 2)

BOEING PROPRIETARY - Copyright © - Unpublished Work - See title page for details.

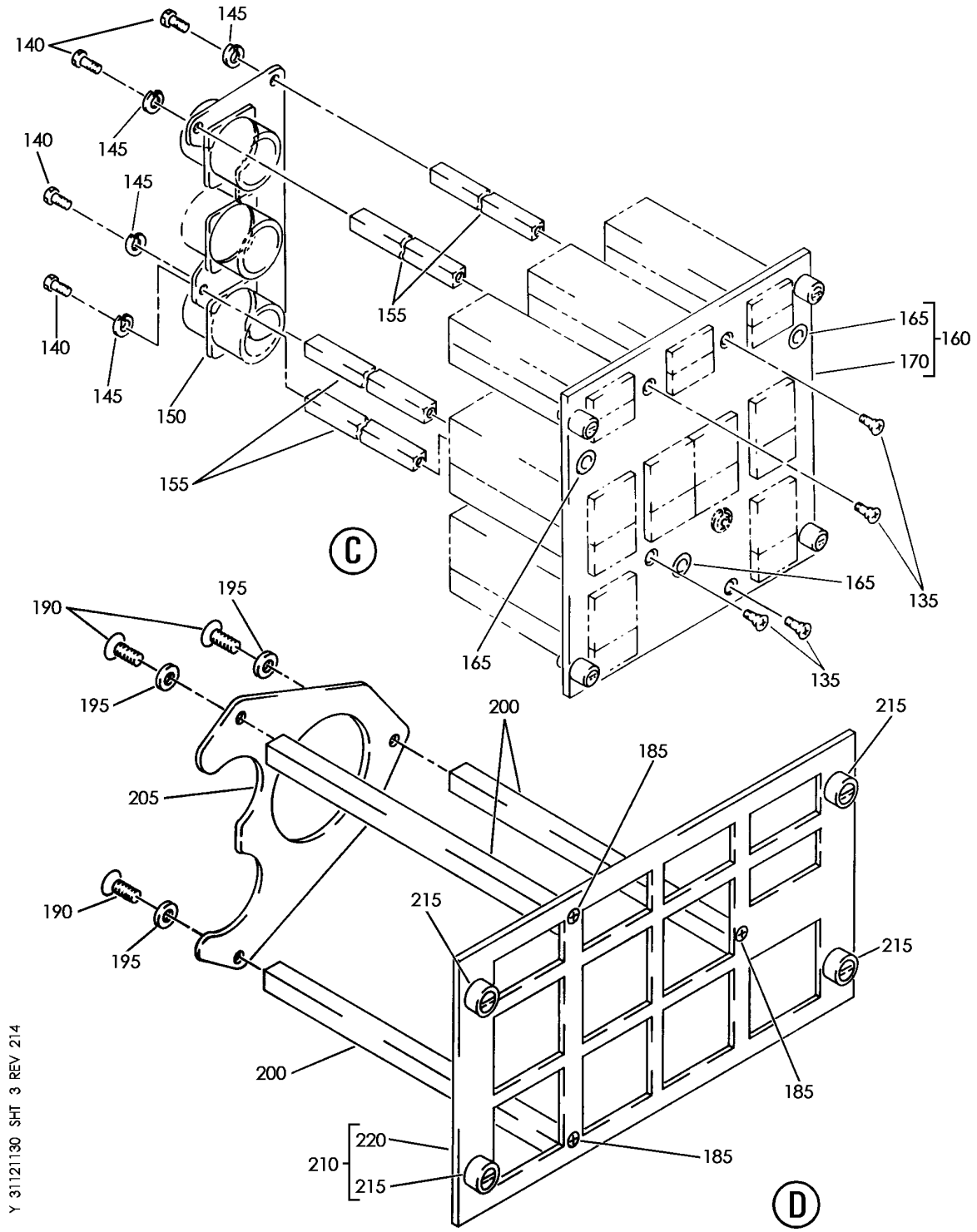

PANEL INSTL-P5 OVHD (INDICATING/RECORDING SYSTEMS ONLY)
FIGURE 30 (SHEET 3)

BOEING PROPRIETARY - Copyright © - Unpublished Work - See title page for details.

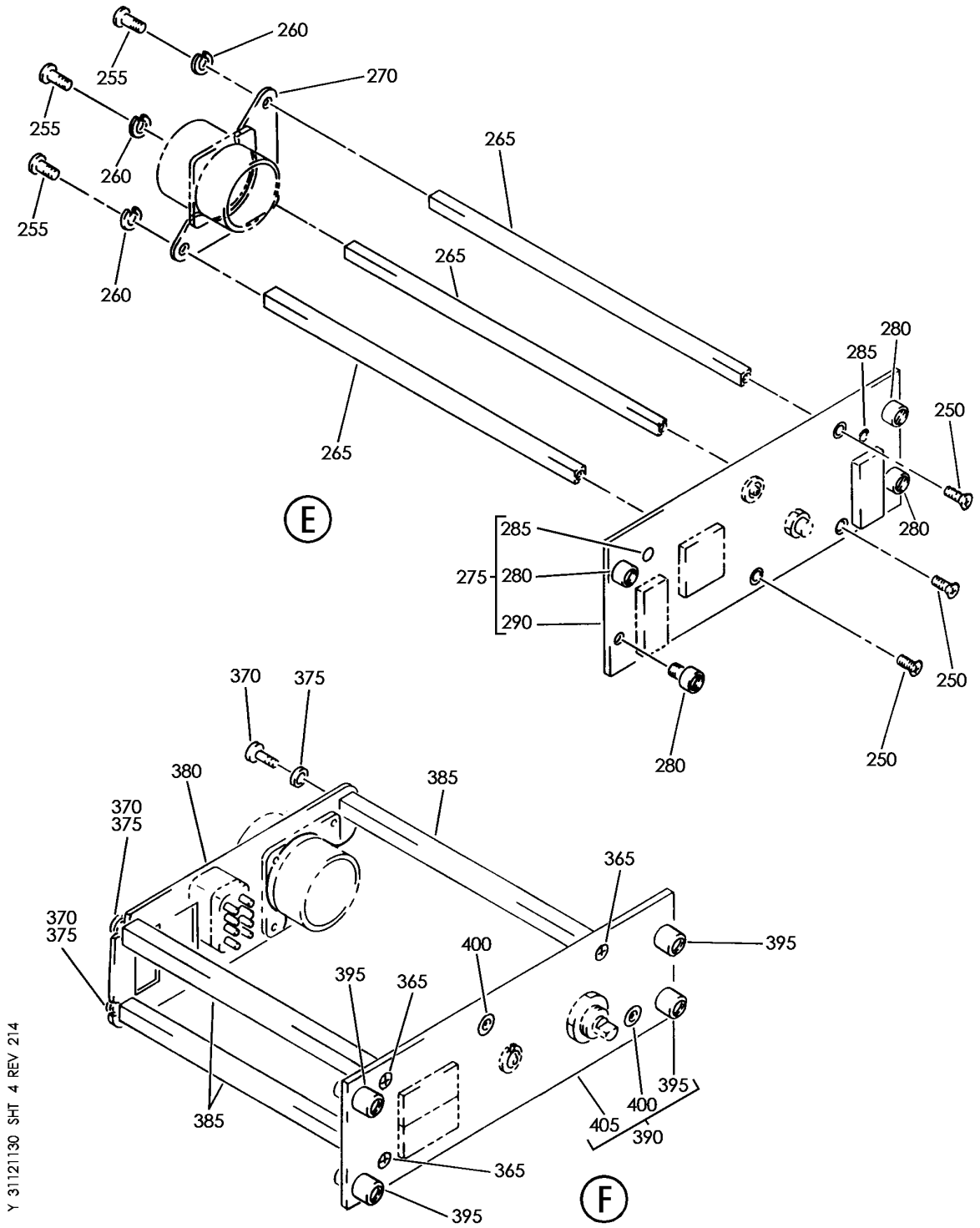

PANEL INSTL-P5 OVHD (INDICATING/RECORDING SYSTEMS ONLY)
FIGURE 30 (SHEET 4)

BOEING PROPRIETARY - Copyright © - Unpublished Work - See title page for details.

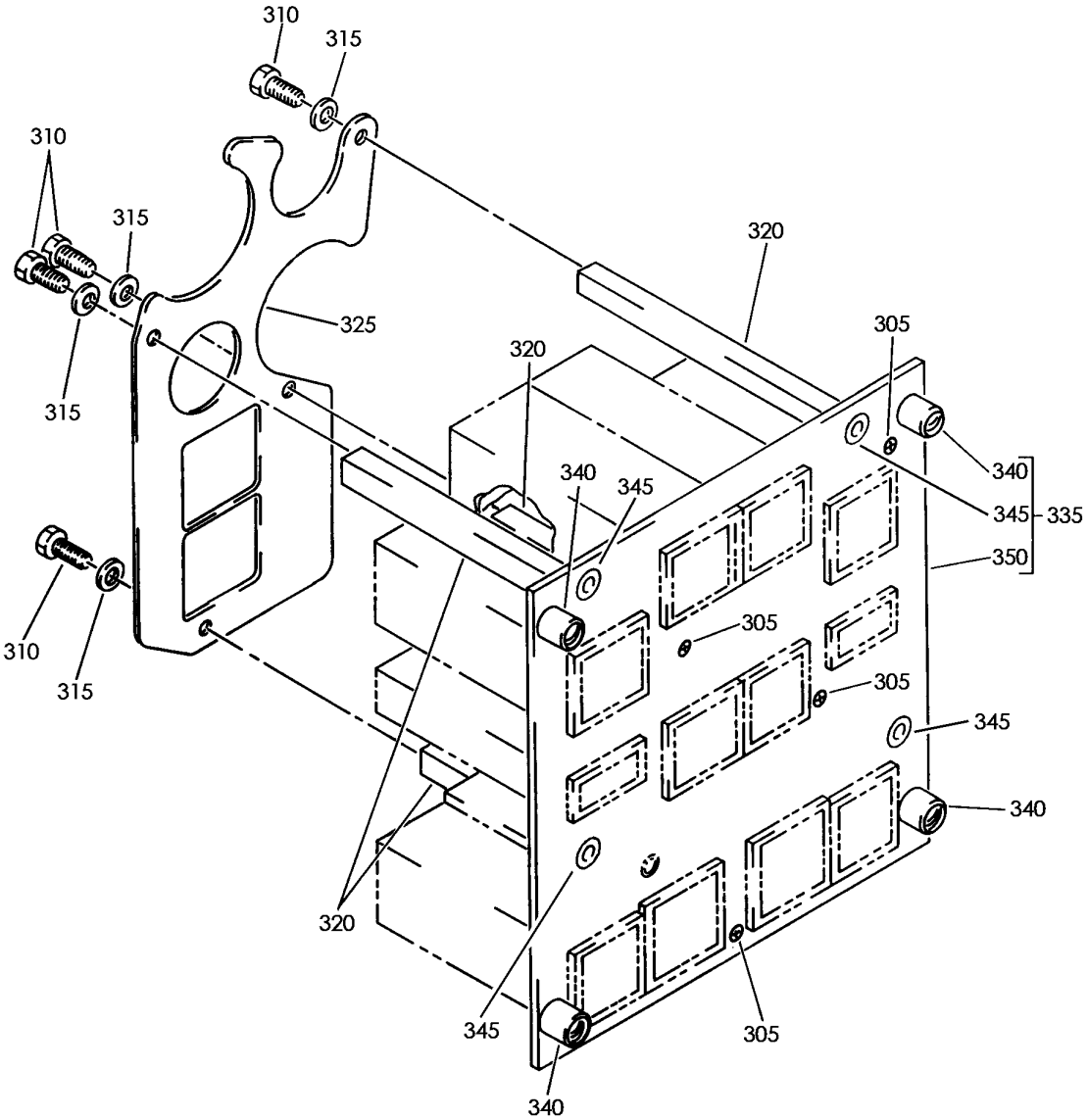

G

Y 31121130 SHT 5 REV 241

PANEL INSTL-P5 OVHD (INDICATING/RECORDING SYSTEMS ONLY)
FIGURE 30 (SHEET 5)

BOEING PROPRIETARY - Copyright © - Unpublished Work - See title page for details.

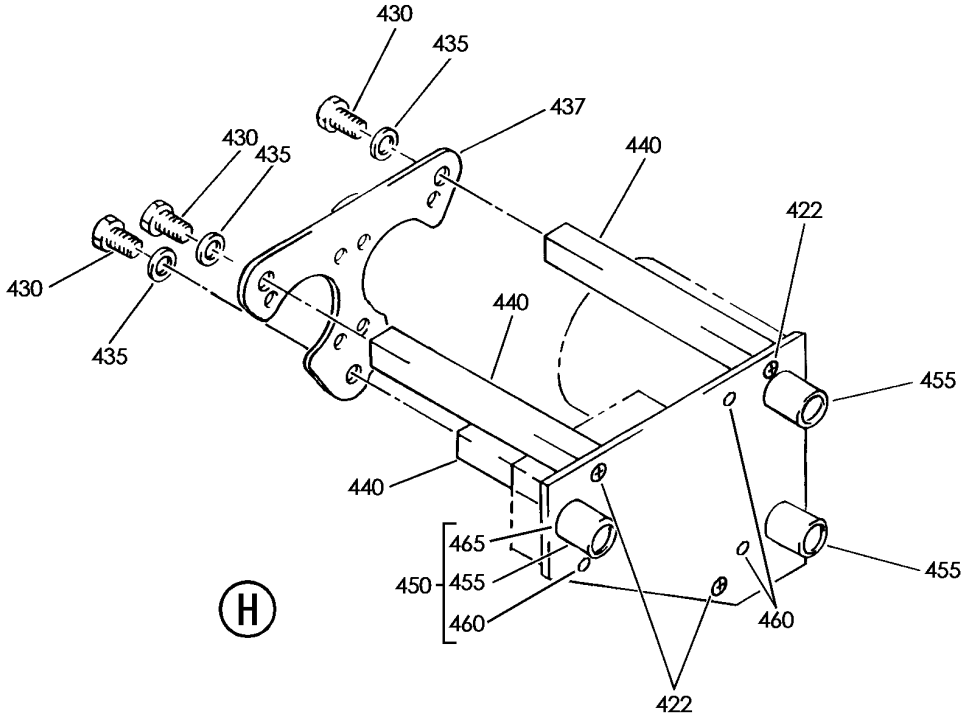

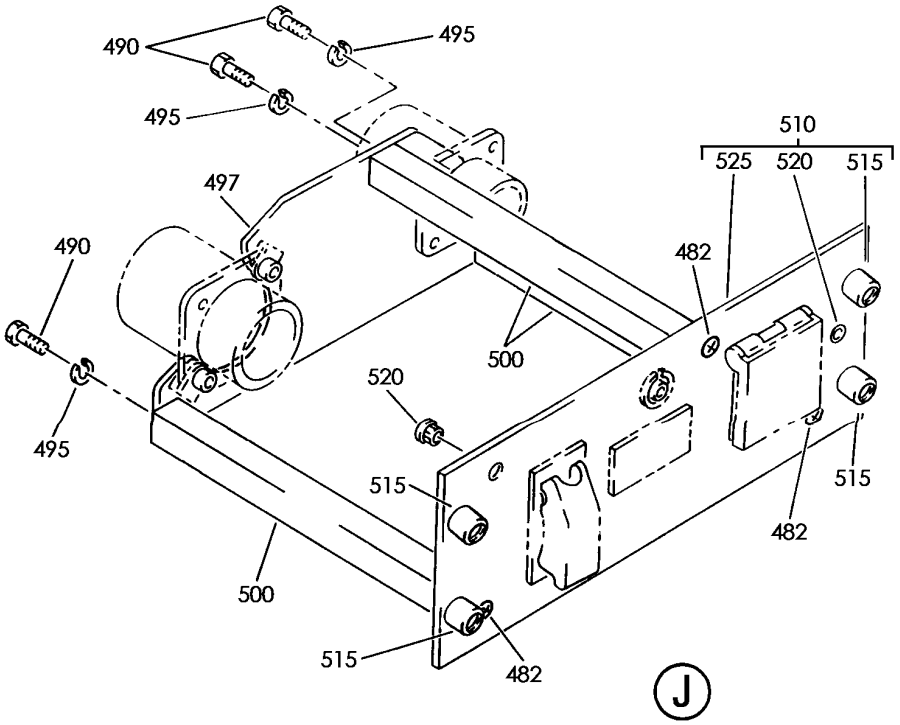

Y 31121130 SHT 6 REV 214

PANEL INSTL-P5 OVHD (INDICATING/RECORDING SYSTEMS ONLY)
FIGURE 30 (SHEET 6)

BOEING PROPRIETARY - Copyright © - Unpublished Work - See title page for details.

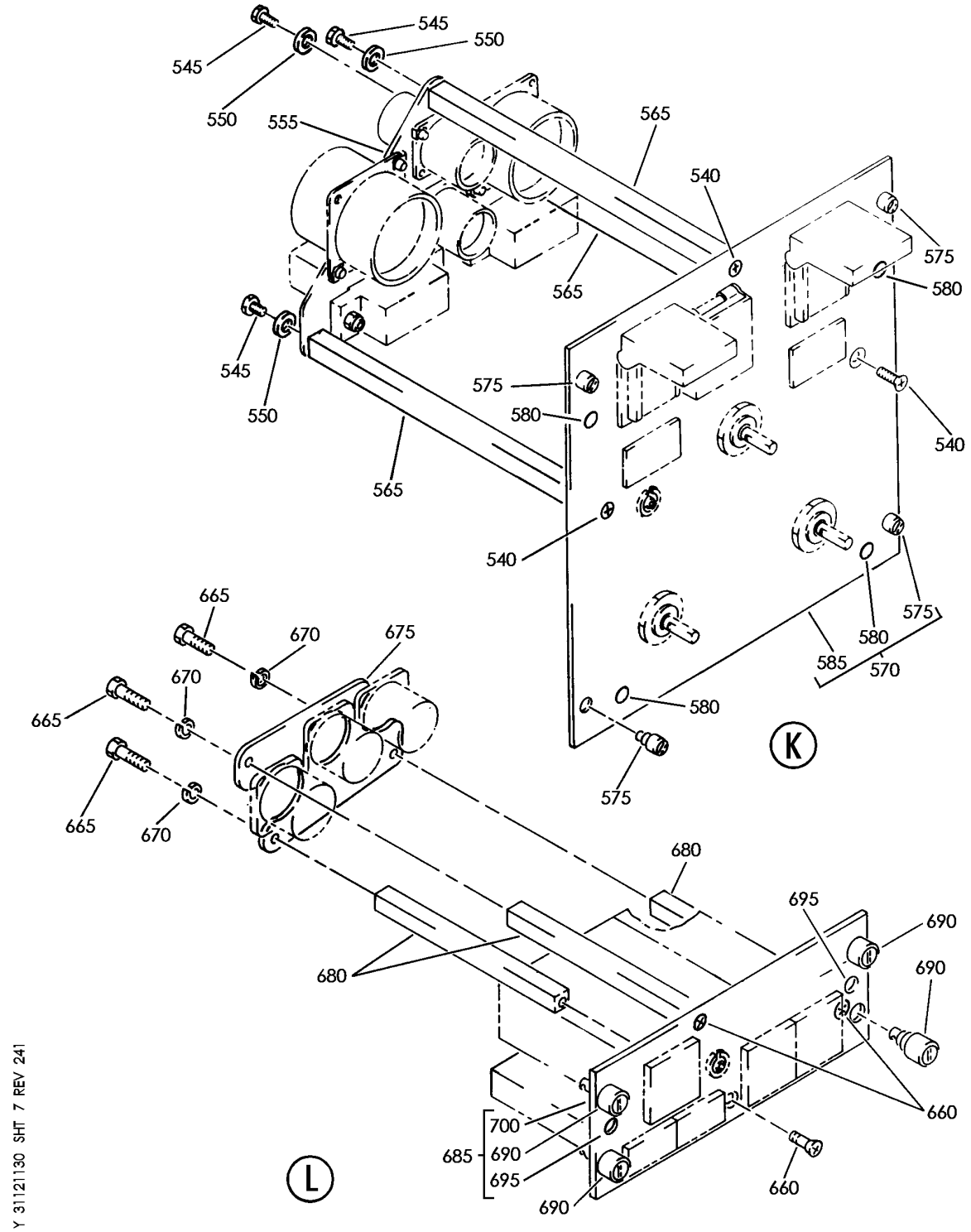

PANEL INSTL-P5 OVHD (INDICATING/RECORDING SYSTEMS ONLY)
FIGURE 30 (SHEET 7)

BOEING PROPRIETARY - Copyright © - Unpublished Work - See title page for details.

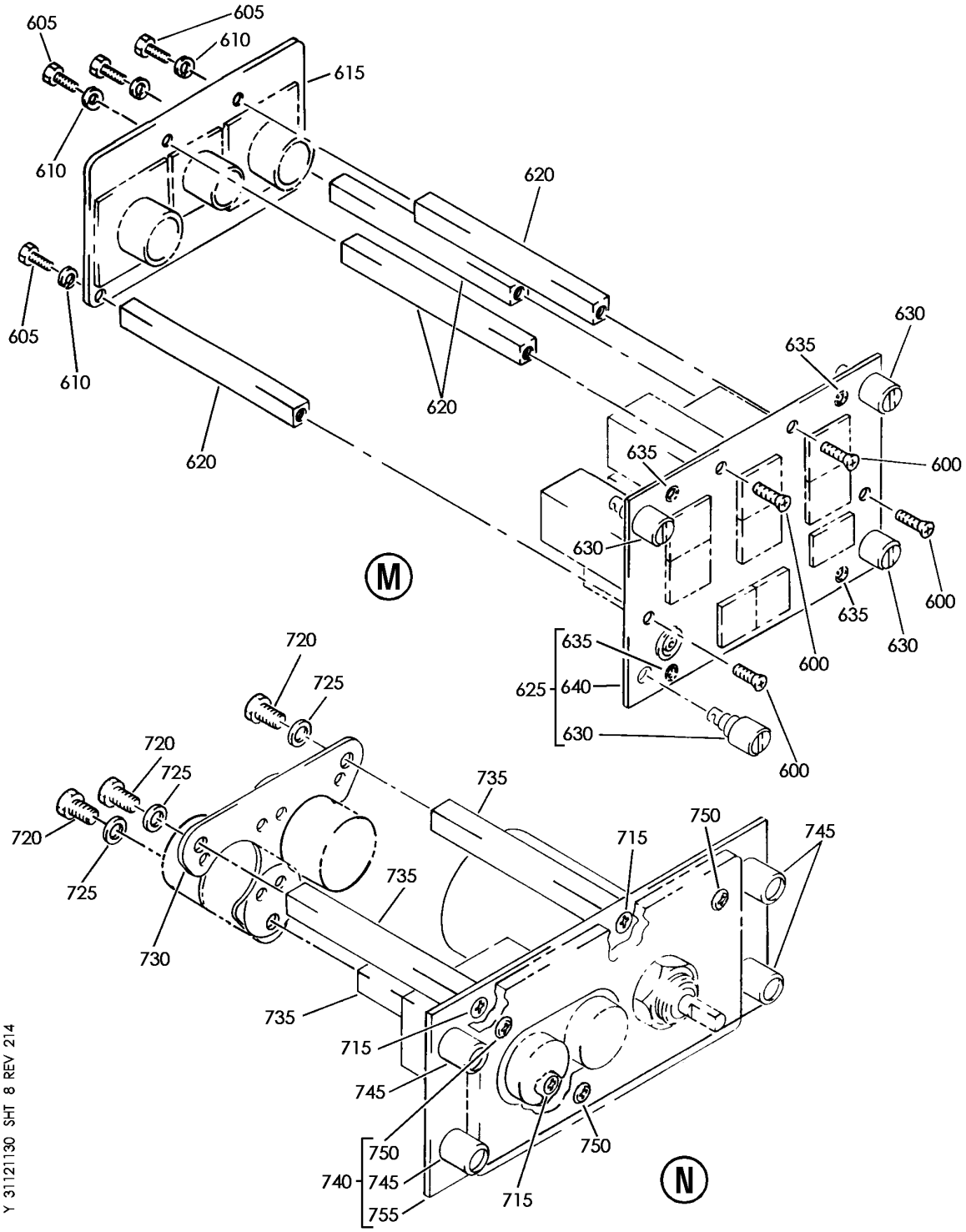

PANEL INSTL-P5 OVHD (INDICATING/RECORDING SYSTEMS ONLY)
FIGURE 30 (SHEET 8)

BOEING PROPRIETARY - Copyright © - Unpublished Work - See title page for details.

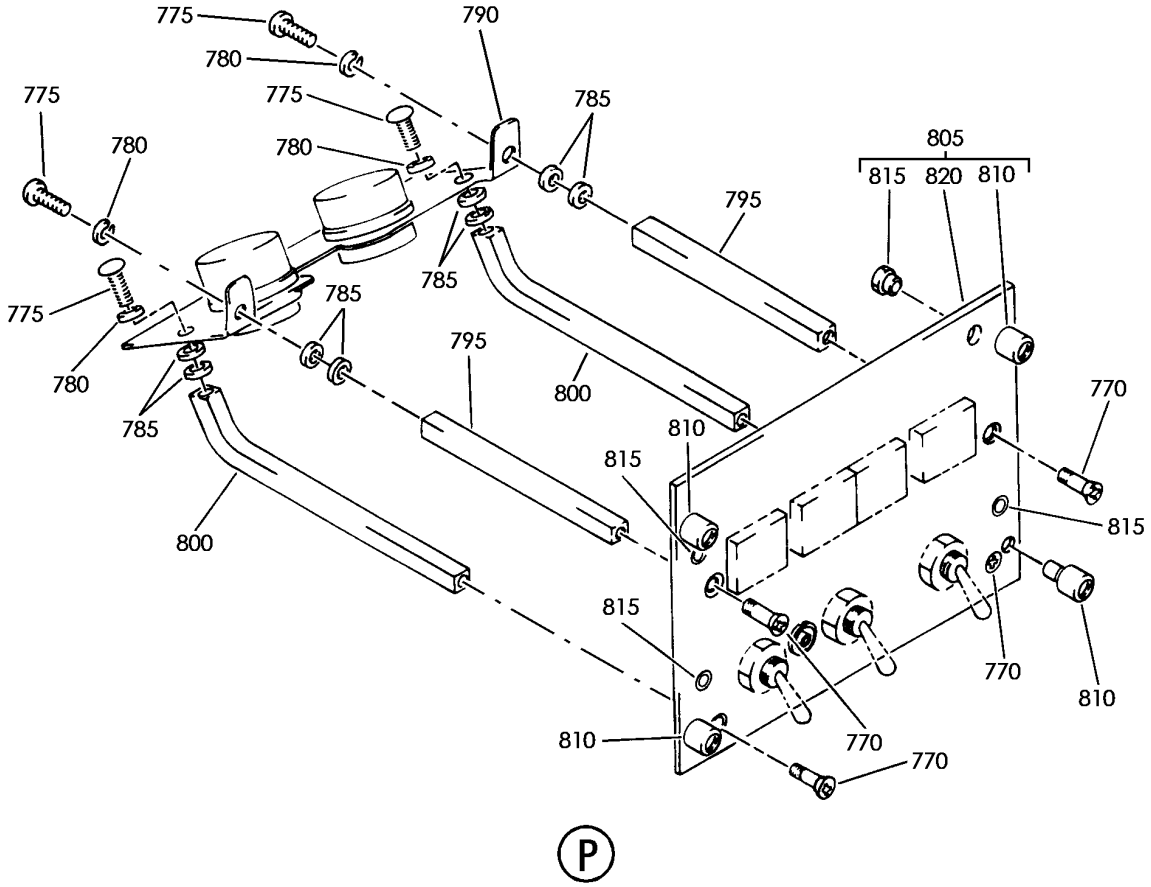

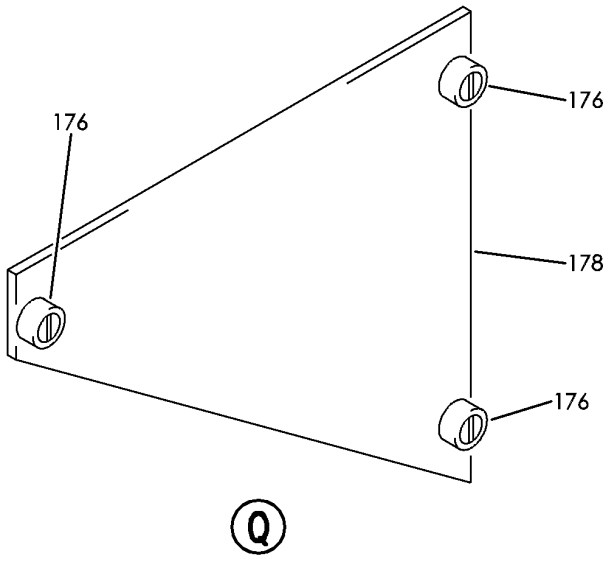

Y 31121130 SHT 9 REV 241

PANEL INSTL-P5 OVHD (INDICATING/RECORDING SYSTEMS ONLY)
FIGURE 30 (SHEET 9)

BOEING PROPRIETARY - Copyright © - Unpublished Work - See title page for details.

FIG ITEM	PART NUMBER	1 2 3 4 5 6 7 NOMENCLATURE	EFFECT FROM TO	UNITS PER ASSY
30				
		PANEL INSTL-P5 OVHD (INDICATING/RECORDING SYSTEMS ONLY)	011100	
- 1	233N3101-1	PANEL INSTL-P5 OVHD (INDICATING/RECORDING SYSTEMS ONLY)	011100	RF
		VARIABLE DRAWING REF: 233N3101-5142		
		FOR NHA/OTHER SYS DET SEE: 25-10-00-05A		
5	BACP10U0262T	.PANEL	011100	1
10	CG1093AD01	.PANEL ASSY-IRS MODE SELECT	011100	RF
		SUPPLIER CODE: V94580		
		SPECIFICATION NUMBER: S242T101-203		
		ELECTRICAL EQUIP NUMBER: M00059		
		COMPONENT MAINT MANUAL REF: 34-21-21		
		QUALIFIED I/W DATA: CG1093AD01 I/W CG1093AC01 EXCEPT CG1093AD01 DISPLAYS IRU MAINTENANCE CODES AND THE TIME REMAINING IN ALIGNMENT CG1093AD01 I/W CG1093AD02 EXCEPT CG1093AD01 DISPLAYS IRU MAINTENANCE CODES AND THE TIME REMAINING IN ALIGNMENT		
		FOR BREAKDOWN SEE: 34-21-02-01		

MISSING ITEM NUMBERS NOT APPLICABLE

- ITEM NOT ILLUSTRATED

BOEING PROPRIETARY - Copyright © - Unpublished Work - See title page for details.

FIG ITEM	PART NUMBER	1 2 3 4 5 6 7 NOMENCLATURE	EFFECT FROM TO	UNITS PER ASSY
30				
15	233N3216-300	.PANEL ASSY-YAW DAMPER SUPPLIER CODE: V89954 ELECTRICAL EQUIP NUMBER: M10250 COMPONENT MAINT MANUAL REF: 22-21-71 QUALIFIED I/W DATA: THE 233N3216-300 PANEL ASSY IS I/W THE 233N3216-20 PANEL ASSY T/W THE S233T100-1075 LIGHTPLATE PRE ALERT SB: 33A0044 FOR OTHER SYS DETAILS SEE: 22-21-01-02 33-13-01-02	011100	1
15	233N3216-1300	.PANEL ASSY-YAW DAMPER SUPPLIER CODE: V89954 ELECTRICAL EQUIP NUMBER: M10250 COMPONENT MAINT MANUAL REF: 22-21-71 POST ALERT SB: 33A0044 FOR OTHER SYS DETAILS SEE: 22-21-01-02 33-13-01-02	011100	1
R R R R R R R 15	233N3216-309	.PANEL ASSY-YAW DAMPER SUPPLIER CODE: V89954 ELECTRICAL EQUIP NUMBER: M10250 COMPONENT MAINT MANUAL REF: 22-21-71	011100	1

MISSING ITEM NUMBERS NOT APPLICABLE

– ITEM NOT ILLUSTRATED

BOEING PROPRIETARY - Copyright © - Unpublished Work - See title page for details.

FIG ITEM	PART NUMBER	1 2 3 4 5 6 7 NOMENCLATURE	EFFECT FROM TO	UNITS PER ASSY
30				
- 20	233N3216-20	..PANEL ASSY- SUPPLIER CODE: V89954 MISCELLANEOUS DATA: FOR SPARES PROCURE NEXT HIGHER ASSY COMPONENT MAINT MANUAL REF: 22-21-71 QUALIFIED I/W DATA: THE 233N3216-300 PANEL ASSY IS I/W THE 233N3216-20 PANEL ASSY T/W THE S233T100-1075 LIGHTPLATE PRE ALERT SB: 33A0044	011100	RF
- 20	233N3216-1020	..PANEL ASSY- SUPPLIER CODE: V89954 COMPONENT MAINT MANUAL REF: 22-21-71 POST ALERT SB: 33A0044	011100	RF
- 20	233N3216-35	..PANEL ASSY- SUPPLIER CODE: V89954 MISCELLANEOUS DATA: FOR SPARES PROCURE NEXT HIGHER ASSY ELECTRICAL EQUIP NUMBER: M10250 COMPONENT MAINT MANUAL REF: 22-21-71	011100	1
25	NAS514P632-5	...SCREW- USED ON: 233N3216-20 233N3216-1020	011100	3
25	FH6C5CPL12BN	...SCREW- SUPPLIER CODE: V12324 USED ON: 233N3216-35	011100	3
30	NAS1801-06-5	...SCREW- USED ON: 233N3216-20 233N3216-1020	011100	3
30	BACS12CK06U5	...SCREW- USED ON: 233N3216-35	011100	3

MISSING ITEM NUMBERS NOT APPLICABLE

- ITEM NOT ILLUSTRATED

BOEING PROPRIETARY - Copyright © - Unpublished Work - See title page for details.

FIG ITEM	PART NUMBER	1 2 3 4 5 6 7 NOMENCLATURE	EFFECT FROM TO	UNITS PER ASSY
30				
35	MS35338-41	...WASHER-	011100	3
		USED ON:		
		233N3216-20		
		233N3216-1020		
35	BACW10EC06C	...WASHER-	011100	3
		USED ON:		
		233N3216-35		
40	233N3250-15	...BRACKET-CONN.	011100	1
45	69B46200-12	...STANDOFF	011100	3
50	233N3216-2	...BASEPLATE ASSY-	011100	1
		SUPPLIER CODE:		
		V89954		
55	PFSC35-38ASEMB	....STUD ASSY-	011100	4
		SUPPLIER CODE:		
		V72794		
		SPECIFICATION NUMBER:		
		BACS21DX1B		
60	SF6G6CBB5D	....NUT	011100	2
		SUPPLIER CODE:		
		V12324		
		SPECIFICATION NUMBER:		
		BACN10PA06-6		
65	233N3216-3	....BASEPLATE-	011100	1
		SUPPLIER CODE:		
		V89954		
70	233T3242-301	.PANEL ASSY-EEC CONT	011100	1
		SUPPLIER CODE:		
		V89954		
		ELECTRICAL EQUIP NUMBER:		
		M10761		
		COMPONENT MAINT MANUAL REF:		
		73-21-86		
		QUALIFIED I/W DATA:		
		233T3242-301 PANEL ASSY		
		IS I/W 233T3242-6 PANEL		
		ASSY T/W S233T100-1092		
		LIGHTPLATE		
		PRE ALERT SB:		
		33A0044		
		FOR OTHER SYS DETAILS SEE:		
		33-13-01-02		
		73-21-52-02		

MISSING ITEM NUMBERS NOT APPLICABLE

– ITEM NOT ILLUSTRATED

BOEING PROPRIETARY - Copyright © - Unpublished Work - See title page for details.

FIG ITEM	PART NUMBER	1 2 3 4 5 6 7 NOMENCLATURE	EFFECT FROM TO	UNITS PER ASSY
30				
70	233T3242-1301	.PANEL ASSY-EEC CONT SUPPLIER CODE: V89954 ELECTRICAL EQUIP NUMBER: M10761 COMPONENT MAINT MANUAL REF: 73-21-86 POST ALERT SB: 33A0044 FOR OTHER SYS DETAILS SEE: 33-13-01-02 73-21-52-02	011100	1
- 75	233T3242-6	..PANEL ASSY- SUPPLIER CODE: V89954 COMPONENT MAINT MANUAL REF: 73-21-86 QUALIFIED I/W DATA: 233T3242-301 PANEL ASSY IS I/W 233T3242-6 PANEL ASSY T/W S233T100-1092 LIGHTPLATE PRE ALERT SB: 33A0044	011100	RF
- 75	233T3242-1006	..PANEL ASSY- SUPPLIER CODE: V89954 COMPONENT MAINT MANUAL REF: 73-21-86 POST ALERT SB: 33A0044	011100	RF
80	NAS514P632-5P	...SCREW	011100	3
85	BACS12CK06U5	...SCREW-	011100	3
90	BACW10EC06C	...WASHER-	011100	3
95	233T6200-142	...BRACKET-SPRT	011100	1
100	69B46200-12	...STANDOFF	011100	3
105	233T3242-2	...BASEPLATE ASSY- SUPPLIER CODE: V89954	011100	1
110	PFSC35-38ASEMB	....STUD ASSY SUPPLIER CODE: V72794 SPECIFICATION NUMBER: BACS21DX1B	011100	4
115	SF6G6CBB5D	....NUT- SUPPLIER CODE: V12324	011100	2
120	BACP10U0187N	....BASEPLATE	011100	1

MISSING ITEM NUMBERS NOT APPLICABLE

- ITEM NOT ILLUSTRATED

BOEING PROPRIETARY - Copyright © - Unpublished Work - See title page for details.

FIG ITEM	PART NUMBER	1 2 3 4 5 6 7 NOMENCLATURE	EFFECT FROM TO	UNITS PER ASSY
30				
125	233N3205-302	.PANEL ASSY-HYDR SUPPLIER CODE: V89954 ELECTRICAL EQUIP NUMBER: M10050 COMPONENT MAINT MANUAL REF: 29-00-71 QUALIFIED I/W DATA: 233N3205-302 PANEL ASSY IS I/W 233N3205-27 PANEL ASSY T/W S233T100-6060 LIGHTPLATE FOR OTHER SYS DETAILS SEE: 29-11-02-06 29-11-05-05 29-11-52-02 29-31-00-02 29-32-51-02 29-33-52-02 33-13-01-02	011100	1
- 130	233N3205-27	..PANEL ASSY- SUPPLIER CODE: V89954 COMPONENT MAINT MANUAL REF: 29-00-71 QUALIFIED I/W DATA: 233N3205-302 PANEL ASSY IS I/W 233N3205-27 PANEL ASSY T/W S233T100-6060 LIGHTPLATE	011100	RF
135	NAS514P632-5	...SCREW	011100	4
140	NAS1801-06-5	...SCREW- OPTIONAL PART: BACS12HN06-5	011100	4
140	BACS12HN06-5	...SCREW- OPTIONAL PART: NAS1801-06-5	011100	4
145	MS35338-41	...WASHER- OPTIONAL PART: BACW10EC06S	011100	4
145	BACW10EC06S	...WASHER- OPTIONAL PART: MS35338-41	011100	4
150	233N3250-8	...BRACKET-SPRT	011100	1
155	69B46200-11	...STANDOFF	011100	4
160	233N3205-30	...BASEPLATE ASSY- SUPPLIER CODE: V89954	011100	1

MISSING ITEM NUMBERS NOT APPLICABLE

- ITEM NOT ILLUSTRATED

BOEING PROPRIETARY - Copyright © - Unpublished Work - See title page for details.

FIG ITEM	PART NUMBER	1 2 3 4 5 6 7 NOMENCLATURE	EFFECT FROM TO	UNITS PER ASSY
30				
165	SF6G6CBB5D	....NUT	011100	3
		SUPPLIER CODE:		
		V12324		
		SPECIFICATION NUMBER:		
		BACN10PA06-6		
170	BACP10U0600T	....PANEL ASSY	011100	1
175	233T3200-2	.PANEL ASSY	011100	1
176	BACS21DD1B	..STUD ASSY	011100	3
		SUPPLIER CODE:		
		V08524		
		SPECIFICATION NUMBER:		
		BACS21DD1B		
178	233T3200-4	..BASEPLATE	011100	1
180	233N3202-21	.PANEL ASSY-ANN.	011100	1
		SUPPLIER CODE:		
		V89954		
		ELECTRICAL EQUIP NUMBER:		
		M10394		
		COMPONENT MAINT MANUAL REF:		
		33-16-71		
		FOR OTHER SYS DETAILS SEE:		
		22-24-51-01		
		26-14-51-01		
		27-21-53-01		
		27-41-55-01		
		27-61-51-01		
		27-62-52-01		
		30-31-51-01		
		30-32-51-01		
		30-33-51-01		
		32-42-52-02		
		52-71-51-01		
185	NAS514P632-5	..SCREW	011100	3
190	NAS1801-6-5	..SCREW	011100	3
195	MS35338-41	..WASHER	011100	3
200	69B46200-10	..STANDOFF	011100	3
205	233N3250-7	..BRACKET-CONN.	011100	1
210	233N3202-22	..BASEPLATE ASSY-	011100	1
		SUPPLIER CODE:		
		V89954		
215	BACS21DD1B	...STUD ASSY	011100	4
		SUPPLIER CODE:		
		V08524		
		SPECIFICATION NUMBER:		
		BACS21DD1B		
220	233N3202-23	...BASEPLATE-	011100	1
		SUPPLIER CODE:		
		V89954		
225	BACP10U0225T	.PANEL	011100	2

MISSING ITEM NUMBERS NOT APPLICABLE

– ITEM NOT ILLUSTRATED

BOEING PROPRIETARY - Copyright © - Unpublished Work - See title page for details.

FIG ITEM	PART NUMBER	1 2 3 4 5 6 7 NOMENCLATURE	EFFECT FROM TO	UNITS PER ASSY
30				
230	622-6827-002	.PANEL ASSY-HF CONT SUPPLIER CODE: V4V792 POSITION DATA: L ELECTRICAL EQUIP NUMBER: M00082 COMPONENT MAINT MANUAL REF: 23-10-73 FOR BREAKDOWN SEE: 23-11-02-01	011100	RF
230	622-5432-002	.PANEL ASSY-HF CONT SUPPLIER CODE: V4V792 ELECTRICAL EQUIP NUMBER: M00082 COMPONENT MAINT MANUAL REF: 23-10-71 FOR BREAKDOWN SEE: 23-11-02-01	011100	RF
240	233N3211-303	.PANEL ASSY-BATTERY/STBY PWR SUPPLIER CODE: V89954 ELECTRICAL EQUIP NUMBER: M10062 COMPONENT MAINT MANUAL REF: 24-33-72 QUALIFIED I/W DATA: THE 233N3211-303 PANEL ASSY IS I/W THE 233N3211-40 PANEL ASSY T/W THE S233T100-1081 LIGHTPLATE AND BP248-127 KNOB PRE ALERT SB: 33A0044 FOR OTHER SYS DETAILS SEE: 24-31-01-12 24-31-03-11 24-33-04-03 33-13-01-02	011100	1

MISSING ITEM NUMBERS NOT APPLICABLE

– ITEM NOT ILLUSTRATED

BOEING PROPRIETARY - Copyright © - Unpublished Work - See title page for details.

FIG ITEM	PART NUMBER	1 2 3 4 5 6 7 NOMENCLATURE	EFFECT FROM TO	UNITS PER ASSY
30				
240	233N3211-308	.PANEL ASSY-BATTERY/STBY PWR SUPPLIER CODE: V89954 ELECTRICAL EQUIP NUMBER: M10062 COMPONENT MAINT MANUAL REF: 24-33-72 PRE ALERT SB: 33A0044 FOR OTHER SYS DETAILS SEE: 24-31-01-12 24-31-03-11 24-33-04-03 33-13-01-02	011100	1
240	233N3211-1303	.PANEL ASSY-BATTERY/STBY PWR SUPPLIER CODE: V89954 ELECTRICAL EQUIP NUMBER: M10062 COMPONENT MAINT MANUAL REF: 24-33-72 POST ALERT SB: 33A0044 FOR OTHER SYS DETAILS SEE: 24-31-01-12 24-31-03-11 24-33-04-03 33-13-01-02	011100	1
240	233N3211-1308	.PANEL ASSY-BATTERY/STBY PWR SUPPLIER CODE: V89954 ELECTRICAL EQUIP NUMBER: M10062 COMPONENT MAINT MANUAL REF: 24-33-72 POST ALERT SB: 33A0044 FOR OTHER SYS DETAILS SEE: 24-31-01-12 24-31-03-11 24-33-04-03 33-13-01-02	011100	1

MISSING ITEM NUMBERS NOT APPLICABLE

– ITEM NOT ILLUSTRATED

BOEING PROPRIETARY - Copyright © - Unpublished Work - See title page for details.

	FIG ITEM	PART NUMBER	1 2 3 4 5 6 7 NOMENCLATURE	EFFECT FROM TO	UNITS PER ASSY
	30				
R	- 245	233N3211-40	..PANEL ASSY-	011100	RF
R			SUPPLIER CODE:		
R			V89954		
R			COMPONENT MAINT MANUAL REF:		
R			24-33-72		
R			QUALIFIED I/W DATA:		
R			THE 233N3211-303 PANEL		
R			ASSY IS I/W THE		
R			233N3211-40 PANEL ASSY		
R			T/W THE S233T100-1081		
R			LIGHTPLATE AND BP248-127		
R			KNOB		
R			USED ON:		
R			233N3211-303		
R			PRE SERVICE BULLETIN:		
R			24-0130		
R			PRE ALERT SB:		
R			33A0044		
R	- 245	233N3211-54	..PANEL ASSY-	011100	RF
R			SUPPLIER CODE:		
R			V89954		
R			COMPONENT MAINT MANUAL REF:		
R			24-33-72		
R			USED ON:		
R			233N3211-308		
R			PRE SERVICE BULLETIN:		
R			24-0130		
R			PRE ALERT SB:		
R			33A0044		
R	- 245	233N3211-1040	..PANEL ASSY-	011100	RF
R			SUPPLIER CODE:		
R			V89954		
R			COMPONENT MAINT MANUAL REF:		
R			24-33-72		
R			USED ON:		
R			233N3211-1303		
R			PRE SERVICE BULLETIN:		
R			24-0130		
R			POST ALERT SB:		
R			33A0044		

MISSING ITEM NUMBERS NOT APPLICABLE

– ITEM NOT ILLUSTRATED

BOEING PROPRIETARY - Copyright © - Unpublished Work - See title page for details.

	FIG ITEM	PART NUMBER	1 2 3 4 5 6 7 NOMENCLATURE	EFFECT FROM TO	UNITS PER ASSY
	30				
R	- 245	233N3211-1054	..PANEL ASSY-	011100	RF
R			SUPPLIER CODE:		
R			V89954		
R			COMPONENT MAINT MANUAL REF:		
R			24-33-72		
R			USED ON:		
R			233N3211-1308		
R			PRE SERVICE BULLETIN:		
R			24-0130		
R			POST ALERT SB:		
R			33A0044		
R	- 245	233N3211-1036	..PANEL ASSY-BATTERY/STBY	015015	RF
R			PWR		
R			SUPPLIER CODE:		
R			V89954		
R			ELECTRICAL EQUIP NUMBER:		
R			M10062		
R			COMPONENT MAINT MANUAL REF:		
R			24-33-72		
R			POST SERVICE BULLETIN:		
R			24-0130		
R			FOR OTHER SYS DETAILS SEE:		
R			24-31-01-12		
R			24-31-03-11		
R			24-33-04-03		
R			33-13-01-02		
R	250	NAS514P632-5	...SCREW-	011100	3
R			USED ON:		
R			233N3211-40		
R			233N3211-1036		
	250	FH6C5CPL12BN	...SCREW-	011100	3
			SUPPLIER CODE:		
			V12324		
			USED ON:		
			233N3211-54		
R	255	NAS1801-06-5	...SCREW-	011100	3
R			USED ON:		
R			233N3211-40		
R			233N3211-1036		
	255	MS51957-27	...SCREW-	011100	3
			USED ON:		
			233N3211-54		
R	260	MS35338-41	...WASHER-	011100	3
R			USED ON:		
R			233N3211-40		
R			233N3211-1036		
	260	MS35338-136	...WASHER-	011100	3
			USED ON:		
			233N3211-54		

MISSING ITEM NUMBERS NOT APPLICABLE

– ITEM NOT ILLUSTRATED

BOEING PROPRIETARY - Copyright © - Unpublished Work - See title page for details.

FIG ITEM	PART NUMBER	1 2 3 4 5 6 7 NOMENCLATURE	EFFECT FROM TO	UNITS PER ASSY
30				
265	69B46200-17	...STANDOFF	011100	3
270	233N3250-5	...BRACKET	011100	1
275	233N3211-49	...BASEPLATE ASSY-	011100	1
		SUPPLIER CODE:		
		V89954		
280	PFSC35-38ASEMB	....STUD ASSY	011100	4
		SUPPLIER CODE:		
		V72794		
		SPECIFICATION NUMBER:		
		BACS21DX1B		
285	SF6G6CBB5D	....NUT-	011100	2
		SUPPLIER CODE:		
		V12324		
290	BACP10U0225NC	....PANEL ASSY-	011100	1
295	233N3209-300	.PANEL ASSY-E/E	011100	1
		SUPPLIER CODE:		
		V89954		
		ELECTRICAL EQUIP NUMBER:		
		M10063		
		QUALIFIED I/W DATA:		
		233N3209-300 PANEL ASSY		
		IS I/W 233N3209-25 PANEL		
		ASSY T/W S233T100-6004		
		LIGHTPLATE		
		PRE ALERT SB:		
		33A0044		
		FOR OTHER SYS DETAILS SEE:		
		24-11-52-03		
		24-22-01-05		
		24-41-51-03		
		24-51-62-01		
		33-13-01-02		
295	233N3209-305	.PANEL ASSY-E/E	011100	1
		SUPPLIER CODE:		
		V89954		
		ELECTRICAL EQUIP NUMBER:		
		M10063		
		COMPONENT MAINT MANUAL REF:		
		24-22-71		
		PRE ALERT SB:		
		33A0044		
		FOR OTHER SYS DETAILS SEE:		
		24-11-52-03		
		24-22-01-05		
		24-41-51-03		
		24-51-62-01		
		33-13-01-02		

MISSING ITEM NUMBERS NOT APPLICABLE

– ITEM NOT ILLUSTRATED

BOEING PROPRIETARY - Copyright © - Unpublished Work - See title page for details.

FIG ITEM	PART NUMBER	1 2 3 4 5 6 7 NOMENCLATURE	EFFECT FROM TO	UNITS PER ASSY
30				
295	233N3209-1300	.PANEL ASSY-E/E SUPPLIER CODE: V89954 ELECTRICAL EQUIP NUMBER: M10063 POST ALERT SB: 33A0044 FOR OTHER SYS DETAILS SEE: 24-11-52-03 24-22-01-05 24-41-51-03 24-51-62-01 33-13-01-02	011100	1
295	233N3209-1305	.PANEL ASSY-E/E SUPPLIER CODE: V89954 ELECTRICAL EQUIP NUMBER: M10063 COMPONENT MAINT MANUAL REF: 24-22-71 POST ALERT SB: 33A0044 FOR OTHER SYS DETAILS SEE: 24-11-52-03 24-22-01-05 24-41-51-03 24-51-62-01 33-13-01-02	011100	1
- 300	233N3209-25	..PANEL ASSY- SUPPLIER CODE: V89954 COMPONENT MAINT MANUAL REF: 24-22-71 QUALIFIED I/W DATA: 233N3209-300 PANEL ASSY IS I/W 233N3209-25 PANEL ASSY T/W S233T100-6004 LIGHTPLATE USED ON: 233N3209-300 PRE ALERT SB: 33A0044	011100	RF

MISSING ITEM NUMBERS NOT APPLICABLE

- ITEM NOT ILLUSTRATED

BOEING PROPRIETARY - Copyright © - Unpublished Work - See title page for details.

FIG ITEM	PART NUMBER	1 2 3 4 5 6 7 NOMENCLATURE	EFFECT FROM TO	UNITS PER ASSY
30				
- 300	233N3209-41	..PANEL ASSY- SUPPLIER CODE: V89954 MISCELLANEOUS DATA: FOR SPARES PROCURE THE NEXT HIGHER ASSY COMPONENT MAINT MANUAL REF: 24-22-71 USED ON: 233N3209-305 PRE ALERT SB: 33A0044	011100	RF
- 300	233N3209-1025	..PANEL ASSY- SUPPLIER CODE: V89954 COMPONENT MAINT MANUAL REF: 24-22-71 USED ON: 233N3209-1300 POST ALERT SB: 33A0044	011100	RF
- 300	233N3209-1041	..PANEL ASSY- SUPPLIER CODE: V89954 COMPONENT MAINT MANUAL REF: 24-22-71 USED ON: 233N3209-305 POST ALERT SB: 33A0044	011100	RF
- 300	233N3209-50	..PANEL ASSY- SUPPLIER CODE: V89954 ELECTRICAL EQUIP NUMBER: M10063 COMPONENT MAINT MANUAL REF: 24-22-71	011100	RF
- 300	233N3209-51	..PANEL ASSY- SUPPLIER CODE: V89954 ELECTRICAL EQUIP NUMBER: M10063 COMPONENT MAINT MANUAL REF: 24-22-71	011100	RF

MISSING ITEM NUMBERS NOT APPLICABLE

- ITEM NOT ILLUSTRATED

BOEING PROPRIETARY - Copyright © - Unpublished Work - See title page for details.

FIG ITEM	PART NUMBER	1 2 3 4 5 6 7 NOMENCLATURE	EFFECT FROM TO	UNITS PER ASSY
30				
305	NAS514P632-5	...SCREW-	011100	4
		USED ON:		
		233N3209-25		
		233N3209-41		
		233N3209-1025		
		233N3209-1041		
305	FH6C5TPKL12BN	...SCREW-	011100	4
		SUPPLIER CODE:		
		V12324		
		USED ON:		
		233N3209-50		
		233N3209-51		
310	NAS1801-06-5	...SCREW-	011100	4
		USED ON:		
		233N3209-25		
		233N3209-41		
		233N3209-1025		
		233N3209-1041		
310	BACS12HN06-5	...SCREW-	011100	4
		USED ON:		
		233N3209-50		
310	BACS12HN06-5	...SCREW-	011100	4
		OPTIONAL PART:		
		NAS1801-06-5		
		USED ON:		
		233N3209-51		
310	NAS1801-06-5	...SCREW-	011100	4
		OPTIONAL PART:		
		BACS12HN06-5		
		USED ON:		
		233N3209-51		
315	MS35338-41	...WASHER-	011100	4
		USED ON:		
		233N3209-25		
		233N3209-41		
		233N3209-1025		
		233N3209-1041		
315	BACW10EC06S	...WASHER-	011100	4
		USED ON:		
		233N3209-50		
		233N3209-51		
320	69B46200-12	...STANDOFF	011100	4
325	233N3209-6	...BRACKET ASSY-	011100	RF
		SUPPLIER CODE:		
		V89954		
335	233N3209-2	...BASEPLATE ASSY-	011100	1
		SUPPLIER CODE:		
		V89954		

MISSING ITEM NUMBERS NOT APPLICABLE

– ITEM NOT ILLUSTRATED

BOEING PROPRIETARY - Copyright © - Unpublished Work - See title page for details.

	FIG ITEM	PART NUMBER	1 2 3 4 5 6 7 NOMENCLATURE	EFFECT FROM TO	UNITS PER ASSY
	30				
	340	PFSC35-38ASEMB	....STUD ASSY- SUPPLIER CODE: V72794 SPECIFICATION NUMBER: BACS21DX1B	011100	4
	345	SF6G6CBB5D	....NUT SUPPLIER CODE: V12324 SPECIFICATION NUMBER: BACN10PA06-6	011100	4
	350	233N3209-3	....BASEPLATE- SUPPLIER CODE: V89954	011100	1
	355	233T3232-300	.PANEL ASSY-APU START SUPPLIER CODE: V89954 ELECTRICAL EQUIP NUMBER: M00001 COMPONENT MAINT MANUAL REF: 49-61-52 FOR OTHER SYS DETAILS SEE: 33-13-01-02 49-41-00-04 49-70-00-03	011100	1
R	355	233T3232-305	.PANEL ASSY-APU START SUPPLIER CODE: V89954 ELECTRICAL EQUIP NUMBER: M00001 COMPONENT MAINT MANUAL REF: 49-61-52 FOR OTHER SYS DETAILS SEE: 33-13-01-02 49-41-00-04 49-70-00-03	011100	1
R	- 360	233T3232-12	..PANEL ASSY- SUPPLIER CODE: V89954 COMPONENT MAINT MANUAL REF: 49-61-52 USED ON: 233T3232-300	011100	RF
R	- 360	233T3232-23	..PANEL ASSY- SUPPLIER CODE: V89954 COMPONENT MAINT MANUAL REF: 49-61-52 USED ON: 233T3232-305	011100	RF

MISSING ITEM NUMBERS NOT APPLICABLE

- ITEM NOT ILLUSTRATED

BOEING PROPRIETARY - Copyright © - Unpublished Work - See title page for details.

	FIG ITEM	PART NUMBER	1 2 3 4 5 6 7 NOMENCLATURE	EFFECT FROM TO	UNITS PER ASSY
	30				
R	365	NAS514P632-5	...SCREW-	011100	3
R			USED ON:		
R			233T3232-12		
R	365	FH6C5CPL12BN	...SCREW-	011100	3
R			SUPPLIER CODE:		
R			V12324		
R			USED ON:		
R			233T3232-23		
R	370	NAS1801-06-5	...SCREW-	011100	3
R			USED ON:		
R			233T3232-12		
R	370	BACS12HN06-5	...SCREW-	011100	3
R			USED ON:		
R			233T3232-23		
R	375	MS35338-41	...WASHER-	011100	3
R			USED ON:		
R			233T3232-12		
R	375	BACW10EC06CD	...WASHER-	011100	3
R			USED ON:		
R			233T3232-23		
	380	233T6200-95	...BRACKET-SPRT	011100	1
R	385	69B46200-12	...STANDOFF-	011100	3
R			USED ON:		
R			233T3232-12		
R	385	69B46200-11	...STANDOFF-	011100	3
R			USED ON:		
R			233T3232-23		
	390	233T3232-2	...BASEPLATE ASSY-	011100	1
			SUPPLIER CODE:		
			V89954		
	395	BACS21DD1B	....STUD ASSY	011100	4
			SUPPLIER CODE:		
			V08524		
			SPECIFICATION NUMBER:		
			BACS21DD1B		
	400	SF6G6CBB5D	....NUT	011100	2
			SUPPLIER CODE:		
			V12324		
			SPECIFICATION NUMBER:		
			BACN10PA06-6		
	405	BACP10U0187N	....BASEPLATE	011100	1

MISSING ITEM NUMBERS NOT APPLICABLE

– ITEM NOT ILLUSTRATED

BOEING PROPRIETARY - Copyright © - Unpublished Work - See title page for details.

FIG ITEM	PART NUMBER	1 2 3 4 5 6 7 NOMENCLATURE	EFFECT FROM TO	UNITS PER ASSY
30				
410	980-6116-002	.PANEL ASSY-VOICE RECORDER (CUSTOMER FURNISHED) SUPPLIER CODE: V97896 ELECTRICAL EQUIP NUMBER: M00050 COMPONENT MAINT MANUAL REF: 23-70-43 FOR BREAKDOWN SEE: 23-71-05-01	011100	RF
410	980-6109-028	.PANEL ASSY-VOICE RECORDER (CUSTOMER FURNISHED) SUPPLIER CODE: V97896 ELECTRICAL EQUIP NUMBER: M00050 COMPONENT MAINT MANUAL REF: 23-70-37 FOR BREAKDOWN SEE: 23-71-05-01	011100	RF
410	980-6109-012	.PANEL-VOICE RECORDER (CUSTOMER FURNISHED) SUPPLIER CODE: V97896 ELECTRICAL EQUIP NUMBER: M00050 COMPONENT MAINT MANUAL REF: 23-70-37 FOR BREAKDOWN SEE: 23-71-05-01	011100	RF

MISSING ITEM NUMBERS NOT APPLICABLE

– ITEM NOT ILLUSTRATED

BOEING PROPRIETARY - Copyright © - Unpublished Work - See title page for details.

FIG ITEM	PART NUMBER	1 2 3 4 5 6 7 NOMENCLATURE	EFFECT FROM TO	UNITS PER ASSY
30				
415	233N3214-300	.PANEL ASSY-LIGHTING CONT SUPPLIER CODE: V89954 ELECTRICAL EQUIP NUMBER: M10056 COMPONENT MAINT MANUAL REF: 33-11-71 QUALIFIED I/W DATA: THE 233N3214-300 PANEL ASSY IS I/W THE 233N3214-31 PANEL ASSY T/W THE S233T100-6003 LIGHTPLATE AND (2) RC445-131 KNOBS AND (2) TT410-101 KNOBS FOR OTHER SYS DETAILS SEE: 33-11-51-15 33-11-03-05 33-13-01-02 33-42-01-06	011100	1
- 420	233N3214-31	..PANEL ASSY- SUPPLIER CODE: V89954 COMPONENT MAINT MANUAL REF: 33-11-71 QUALIFIED I/W DATA: THE 233N3214-300 PANEL ASSY IS I/W THE 233N3214-31 PANEL ASSY T/W THE S233T100-6003 LIGHTPLATE AND (2) RC445-131 KNOBS AND (2) TT410-101 KNOBS	011100	RF
422	NAS514P632-5	...SCREW	011100	3
430	BACS12HN06-5	...SCREW-	011100	3
435	BACW10EC06S	...WASHER-	011100	3
437	233N3250-34	...BRACKET-SPRT	011100	1
440	69B46200-14	...STANDOFF	011100	3
450	233N3214-16	...BASEPLATE ASSY- SUPPLIER CODE: V89954	011100	1
455	PFSC35-38ASEMB	....STUD ASSY- SUPPLIER CODE: V72794 SPECIFICATION NUMBER: BACS21DX1B	011100	3

MISSING ITEM NUMBERS NOT APPLICABLE

- ITEM NOT ILLUSTRATED

BOEING PROPRIETARY - Copyright © - Unpublished Work - See title page for details.

FIG ITEM	PART NUMBER	1 2 3 4 5 6 7 NOMENCLATURE	EFFECT FROM TO	UNITS PER ASSY
30				
460	SF6G6CBB5D	....NUT SUPPLIER CODE: V12324 SPECIFICATION NUMBER: BACN10PA06-6	011100	3
465	233N3214-17	....BASEPLATE- SUPPLIER CODE: V89954	011100	1
470	BACP10U0337T	.PANEL ASSY	011100	1
475	233T3210-300	.PANEL ASSY-EMER LIGHTS PASS. OXY SUPPLIER CODE: V89954 ELECTRICAL EQUIP NUMBER: M00043 COMPONENT MAINT MANUAL REF: 33-51-03 QUALIFIED I/W DATA: THE 233T3210-300 PANEL ASSY IS I/W 233N3210-28 PANEL ASSY T/W THE S233T100-1077 LIGHTPLATE PRE ALERT SB: 33A0044 FOR OTHER SYS DETAILS SEE: 33-13-01-02 33-51-08-03 35-21-51-03	011100	1
475	233T3210-1300	.PANEL ASSY-EMER LIGHTS PASS. OXY SUPPLIER CODE: V89954 ELECTRICAL EQUIP NUMBER: M00043 COMPONENT MAINT MANUAL REF: 33-51-03 POST ALERT SB: 33A0044 FOR OTHER SYS DETAILS SEE: 33-13-01-02 33-51-08-03 35-21-51-03	011100	1

MISSING ITEM NUMBERS NOT APPLICABLE

– ITEM NOT ILLUSTRATED

BOEING PROPRIETARY - Copyright © - Unpublished Work - See title page for details.

FIG ITEM	PART NUMBER	1 2 3 4 5 6 7 NOMENCLATURE	EFFECT FROM TO	UNITS PER ASSY
30				
- 480	233T3210-28	..PANEL ASSY- SUPPLIER CODE: V89954 COMPONENT MAINT MANUAL REF: 33-51-03 QUALIFIED I/W DATA: THE 233T3210-300 PANEL ASSY IS I/W THE 233T3210-28 PANEL ASSY T/W THE S233T100-1077 LIGHTPLATE. PRE ALERT SB: 33A0044	011100	RF
- 480	233T3210-1028	..PANEL ASSY- SUPPLIER CODE: V89954 COMPONENT MAINT MANUAL REF: 33-51-03 POST ALERT SB: 33A0044	011100	RF
482	NAS514P632-5	...SCREW	011100	3
490	NAS1801-06-5	...SCREW	011100	3
495	MS35338-41	...WASHER	011100	3
497	233T6200-82	...BRACKET-SPRT	011100	1
500	69B46200-10	...STANDOFF	011100	3
510	233T3210-17	...BASEPLATE ASSY- SUPPLIER CODE: V89954	011100	1
515	BACS21DD1B	....STUD ASSY SUPPLIER CODE: V08524 SPECIFICATION NUMBER: BACS21DD1B	011100	4
520	SF6G6CBB5D	....NUT SUPPLIER CODE: V12324 SPECIFICATION NUMBER: BACN10PA06-6	011100	2
525	BACP10U0225N	....PANEL	011100	1

MISSING ITEM NUMBERS NOT APPLICABLE

– ITEM NOT ILLUSTRATED

BOEING PROPRIETARY - Copyright © - Unpublished Work - See title page for details.

FIG ITEM	PART NUMBER	1 2 3 4 5 6 7 NOMENCLATURE	EFFECT FROM TO	UNITS PER ASSY
30				
530	233N3223-300	.PANEL ASSY-ENG START/RAT SUPPLIER CODE: V89954 ELECTRICAL EQUIP NUMBER: M10468 COMPONENT MAINT MANUAL REF: 31-12-01 QUALIFIED I/W DATA: THE 233N3223-300 PANEL ASSY IS I/W THE 233N3223-39 PANEL ASSY T/W THE S233T100-6046 LIGHTPLATE AND (3) BP248-127 KNOBS. PRE ALERT SB: 33A0044 FOR OTHER SYS DETAILS SEE: 29-21-54-02 33-13-01-02 73-21-52-02 74-31-51-02 80-11-09-02	011100	1
530	233N3223-343	.PANEL ASSY-ENG START/RAT SUPPLIER CODE: V89954 ELECTRICAL EQUIP NUMBER: M10468 FOR OTHER SYS DETAILS SEE: 29-21-54-02 33-13-01-02 73-21-52-02 74-31-51-02 80-11-09-02	011100	1

MISSING ITEM NUMBERS NOT APPLICABLE

– ITEM NOT ILLUSTRATED

BOEING PROPRIETARY - Copyright © - Unpublished Work - See title page for details.

FIG ITEM	PART NUMBER	1 2 3 4 5 6 7 NOMENCLATURE	EFFECT FROM TO	UNITS PER ASSY
30				
530	233N3223-1300	.PANEL ASSY-ENG START/RAT SUPPLIER CODE: V89954 ELECTRICAL EQUIP NUMBER: M10468 COMPONENT MAINT MANUAL REF: 31-12-01 OPTIONAL PART: 233N3223-1301 V89954 POST ALERT SB: 33A0044 FOR OTHER SYS DETAILS SEE: 29-21-54-02 33-13-01-02 73-21-52-02 74-31-51-02 80-11-09-02	011100	1
- 535	233N3223-39	..PANEL ASSY- SUPPLIER CODE: V89954 MISCELLANEOUS DATA: FOR SPARES PROCURE NEXT HIGHER ASSY COMPONENT MAINT MANUAL REF: 31-12-01 QUALIFIED I/W DATA: THE 233N3223-300 PANEL ASSY IS I/W THE 233N3223-39 PANEL ASSY T/W THE S233T100-6046 LIGHTPLATE AND (3) BP248-127 KNOBS. USED ON: 233N3223-300 PRE ALERT SB: 33A0044	011100	RF
- 535	233N3223-53	..PANEL ASSY- SUPPLIER CODE: V89954 MISCELLANEOUS DATA: FOR SPARES PROCURE NEXT HIGHER ASSY COMPONENT MAINT MANUAL REF: 31-12-01 USED ON: 233N3223-343	011100	RF

MISSING ITEM NUMBERS NOT APPLICABLE

- ITEM NOT ILLUSTRATED

BOEING PROPRIETARY - Copyright © - Unpublished Work - See title page for details.

FIG ITEM	PART NUMBER	1 2 3 4 5 6 7 NOMENCLATURE	EFFECT FROM TO	UNITS PER ASSY
30				
- 535	233N3223-1039	..PANEL ASSY-	011100	RF
		SUPPLIER CODE:		
		V89954		
		COMPONENT MAINT MANUAL REF:		
		31-12-01		
		USED ON:		
		233N3223-1300		
		POST ALERT SB:		
		33A0044		
540	NAS514P632-5	...SCREW	011100	3
545	NAS1801-06-5	...SCREW-	011100	3
		USED ON:		
		233N3223-39		
		233N3223-1039		
545	BACS12HN06-5	...SCREW-	011100	3
		OPTIONAL PART:		
		NAS1801-06-5		
		USED ON:		
		233N3223-53		
545	NAS1801-06-5	...SCREW-	011100	3
		OPTIONAL PART:		
		BACS12HN06-5		
		USED ON:		
		233N3223-53		
550	MS35338-41	...WASHER-	011100	3
		USED ON:		
		233N3223-39		
		233N3223-1039		
550	BACW10EC06CD	...WASHER-	011100	3
		USED ON:		
		233N3223-53		
555	233N3223-35	...BRACKET ASSY-SPRT	011100	RF
		SUPPLIER CODE:		
		V89954		
565	69B46200-13	...STANDOFF	011100	3
570	233N3223-8	...BASEPLATE ASSY-	011100	1
		SUPPLIER CODE:		
		V89954		
575	PFSC35-38ASEMB	....STUD ASSY-	011100	4
		SUPPLIER CODE:		
		V72794		
		SPECIFICATION NUMBER:		
		BACS21DX1B		
580	SF6G6CBB5D	....NUT	011100	4
		SUPPLIER CODE:		
		V12324		
		SPECIFICATION NUMBER:		
		BACN10PA06-6		

MISSING ITEM NUMBERS NOT APPLICABLE

– ITEM NOT ILLUSTRATED

BOEING PROPRIETARY - Copyright © - Unpublished Work - See title page for details.

FIG ITEM	PART NUMBER	1 2 3 4 5 6 7 NOMENCLATURE	EFFECT FROM TO	UNITS PER ASSY
30				
585	233N3223-9	....BASEPLATE- SUPPLIER CODE: V89954	011100	1
590	233N3206-300	.PANEL ASSY-FUEL CONT SUPPLIER CODE: V89954 ELECTRICAL EQUIP NUMBER: M10055 COMPONENT MAINT MANUAL REF: 28-41-71 QUALIFIED I/W DATA: THE 233N3206-300 PANEL ASSY IS I/W THE 233N3206-19 PANEL ASSY T/W THE S233T100-1106 LIGHTPLATE PRE ALERT SB: 28A0105R1 PRE COMPONENT SB: 233N3206-28-03 FOR OTHER SYS DETAILS SEE: 28-22-51-02 28-41-51-02 33-13-01-02	011100	1
590	233N3206-3300	.PANEL ASSY-FUEL CONT SUPPLIER CODE: V89954 ELECTRICAL EQUIP NUMBER: M10055 COMPONENT MAINT MANUAL REF: 28-41-71 POST ALERT SB: 28A0105R1 POST COMPONENT SB: 233N3206-28-03 FOR OTHER SYS DETAILS SEE: 28-22-51-02 28-41-51-02 33-13-01-02	011100	1

MISSING ITEM NUMBERS NOT APPLICABLE

– ITEM NOT ILLUSTRATED

BOEING PROPRIETARY - Copyright © - Unpublished Work - See title page for details.

FIG ITEM	PART NUMBER	1 2 3 4 5 6 7 NOMENCLATURE	EFFECT FROM TO	UNITS PER ASSY
30				
- 595	233N3206-19	..PANEL ASSY- SUPPLIER CODE: V89954 COMPONENT MAINT MANUAL REF: 28-41-71 QUALIFIED I/W DATA: THE 233N3206-300 PANEL ASSY IS I/W THE 233N3206-19 PANEL ASSY T/W THE S233T100-1106 LIGHTPLATE PRE ALERT SB: 28A0105R1 PRE COMPONENT SB: 233N3206-28-03	011100	RF
- 595	233N3206-3019	..PANEL ASSY- SUPPLIER CODE: V89954 COMPONENT MAINT MANUAL REF: 28-41-71 POST ALERT SB: 28A0105R1 POST COMPONENT SB: 233N3206-28-03	011100	RF
600	NAS514P632-5	...SCREW	011100	4
605	BACS12HN06-5	...SCREW-	011100	4
610	BACW10EC06S	...WASHER-	011100	4
615	233N3250-64	...BRACKET-CONN.	011100	1
620	69B46200-11	...STANDOFF	011100	4
625	233T3235-18	...BASEPLATE ASSY- SUPPLIER CODE: V89954	011100	1
630	PFSC35-38ASEMB	....STUD ASSY SUPPLIER CODE: V72794 SPECIFICATION NUMBER: BACS21DX1B	011100	4
635	SF6G6CBB5D	....NUT- SUPPLIER CODE: V12324	011100	4
640	BACP10U0412N	....BASEPLATE	011100	1

MISSING ITEM NUMBERS NOT APPLICABLE

– ITEM NOT ILLUSTRATED

BOEING PROPRIETARY - Copyright © - Unpublished Work - See title page for details.

FIG ITEM	PART NUMBER	1 2 3 4 5 6 7 NOMENCLATURE	EFFECT FROM TO	UNITS PER ASSY
30				
645	10080-0101	.INDICATOR ASSY- INTERGRATED FUEL QTY SUPPLIER CODE: V89305 SPECIFICATION NUMBER: S345N001-001 ELECTRICAL EQUIP NUMBER: M10054 COMPONENT MAINT MANUAL REF: 28-42-08 OPTIONAL PART: 10080-0201 V89305 FOR BREAKDOWN SEE: 28-41-04-02	011100	RF
645	10080-0201	.INDICATOR ASSY- INTERGRATED FUEL QTY SUPPLIER CODE: V89305 FUNCTIONAL DESCRIPTION: MODULE DISPLAYS INDIVIDUAL TANK QUANTITY, TOTAL QUANTITY & TEMPERATURE OF MAIN TANK SPECIFICATION NUMBER: S345N001-001 ELECTRICAL EQUIP NUMBER: M10054 COMPONENT MAINT MANUAL REF: 28-42-08 OPTIONAL PART: 10080-0101 V89305 FOR BREAKDOWN SEE: 28-41-04-02	011100	RF

MISSING ITEM NUMBERS NOT APPLICABLE

– ITEM NOT ILLUSTRATED

BOEING PROPRIETARY - Copyright © - Unpublished Work - See title page for details.

FIG ITEM	PART NUMBER	1 2 3 4 5 6 7 NOMENCLATURE	EFFECT FROM TO	UNITS PER ASSY
30				
650	233N3204-300	.PANEL ASSY-ANTI-ICE SUPPLIER CODE: V89954 ELECTRICAL EQUIP NUMBER: M10397 COMPONENT MAINT MANUAL REF: 30-11-72 QUALIFIED I/W DATA: 233N3204-300 PANEL ASSY IS I/W 233N3204-19 PANEL ASSY T/W S233T100-1070 LIGHTPLATE PRE ALERT SB: 33A0044 FOR OTHER SYS DETAILS SEE: 30-11-51-02 30-21-51-02 33-13-01-02	011100	1
650	233N3204-301	.PANEL ASSY-ANTI-ICE SUPPLIER CODE: V89954 ELECTRICAL EQUIP NUMBER: M10397 COMPONENT MAINT MANUAL REF: 30-11-72 QUALIFIED I/W DATA: 233N3204-301 PANEL ASSY IS I/W 233N3204-20 PANEL ASSY T/W S233T100-1070 LIGHTPLATE PRE ALERT SB: 33A0044 FOR OTHER SYS DETAILS SEE: 30-11-51-02 30-21-51-02 33-13-01-02	011100	1
650	233N3204-1300	.PANEL ASSY-ANTI-ICE SUPPLIER CODE: V89954 ELECTRICAL EQUIP NUMBER: M10397 COMPONENT MAINT MANUAL REF: 30-11-72 POST ALERT SB: 33A0044 FOR OTHER SYS DETAILS SEE: 30-11-51-02 30-21-51-02 33-13-01-02	011100	1

MISSING ITEM NUMBERS NOT APPLICABLE

– ITEM NOT ILLUSTRATED

BOEING PROPRIETARY - Copyright © - Unpublished Work - See title page for details.

FIG ITEM	PART NUMBER	1 2 3 4 5 6 7 NOMENCLATURE	EFFECT FROM TO	UNITS PER ASSY
30				
650	233N3204-1301	.PANEL ASSY-ANTI-ICE SUPPLIER CODE: V89954 ELECTRICAL EQUIP NUMBER: M10397 COMPONENT MAINT MANUAL REF: 30-11-72 POST ALERT SB: 33A0044 FOR OTHER SYS DETAILS SEE: 30-11-51-02 30-21-51-02 33-13-01-02	011100	1
- 655	233N3204-19	..PANEL ASSY- SUPPLIER CODE: V89954 COMPONENT MAINT MANUAL REF: 30-11-72 QUALIFIED I/W DATA: 233N3204-300 PANEL ASSY IS I/W 233N3204-19 PANEL ASSY T/W S233T100-1070 LIGHTPLATE USED ON: 233N3204-300 PRE ALERT SB: 33A0044	011100	RF
- 655	233N3204-20	..PANEL ASSY- SUPPLIER CODE: V89954 COMPONENT MAINT MANUAL REF: 30-11-72 QUALIFIED I/W DATA: 233N3204-301 PANEL ASSY IS I/W 233N3204-20 PANEL ASSY T/W S233T100-1070 LIGHTPLATE USED ON: 233N3204-301 PRE ALERT SB: 33A0044	011100	RF

MISSING ITEM NUMBERS NOT APPLICABLE

- ITEM NOT ILLUSTRATED

BOEING PROPRIETARY - Copyright © - Unpublished Work - See title page for details.

FIG ITEM	PART NUMBER	1 2 3 4 5 6 7 NOMENCLATURE	EFFECT FROM TO	UNITS PER ASSY
30				
- 655	233N3204-1019	..PANEL ASSY- SUPPLIER CODE: V89954 COMPONENT MAINT MANUAL REF: 30-11-72 USED ON: 233N3204-1300 POST ALERT SB: 33A0044	011100	RF
- 655	233N3204-1020	..PANEL ASSY- SUPPLIER CODE: V89954 COMPONENT MAINT MANUAL REF: 30-11-72 USED ON: 233N3204-1301 POST ALERT SB: 33A0044	011100	RF
660	NAS514P632-5	...SCREW	011100	3
665	NAS1801-06-5	...SCREW	011100	3
670	MS35338-41	...WASHER	011100	3
675	233N3250-56	...BRACKET-SPRT	011100	1
680	69B46200-11	...STANDOFF	011100	3
685	233N3204-7	...BASEPLATE ASSY- SUPPLIER CODE: V89954	011100	1
690	PFSC35-38ASEMB	....STUD ASSY- SUPPLIER CODE: V72794 SPECIFICATION NUMBER: BACS21DX1B	011100	4
695	SF6G6CBB5D	....NUT SUPPLIER CODE: V12324 SPECIFICATION NUMBER: BACN10PA06-6	011100	2
700	233N3204-8	....BASEPLATE- SUPPLIER CODE: V89954	011100	1

MISSING ITEM NUMBERS NOT APPLICABLE

- ITEM NOT ILLUSTRATED

BOEING PROPRIETARY - Copyright © - Unpublished Work - See title page for details.

FIG ITEM	PART NUMBER	1 2 3 4 5 6 7 NOMENCLATURE	EFFECT FROM TO	UNITS PER ASSY
30				
705	233N3201-300	.PANEL ASSY-WSHLD CLEARANCE SUPPLIER CODE: V89954 ELECTRICAL EQUIP NUMBER: M10023 COMPONENT MAINT MANUAL REF: 30-42-01 QUALIFIED I/W DATA: 233N3201-11 PANEL ASSY T/W S233T100-1074 LIGHTPLATE AND BP248-127 KNOB IS I/W 233N3201-300 FOR OTHER SYS DETAILS SEE: 30-42-51-02 30-43-51-02 33-13-01-02	011100	1
- 710	233N3201-11	..PANEL ASSY- SUPPLIER CODE: V89954 COMPONENT MAINT MANUAL REF: 30-42-01 QUALIFIED I/W DATA: 233N3201-11 PANEL ASSY T/W S233T100-1074 LIGHTPLATE AND BP248-127 KNOB IS I/W 233N3201-300	011100	RF
715	NAS514P632-5	...SCREW	011100	3
720	BACS12CB06-5	...SCREW	011100	3
725	MS35338-41	...WASHER	011100	3
730	233N3250-6	...BRACKET-CONN.	011100	1
735	69B46200-5	...STANDOFF	011100	3
740	233N3201-8	...BASEPLATE ASSY- SUPPLIER CODE: V89954	011100	1
745	BACS21DD1B	....STUD ASSY SUPPLIER CODE: V08524 SPECIFICATION NUMBER: BACS21DD1B	011100	4
750	SF6G6CBB5D	....NUT SUPPLIER CODE: V12324 SPECIFICATION NUMBER: BACN10PA06-6	011100	3
755	BACP10U0262N	....BASEPLATE	011100	1

MISSING ITEM NUMBERS NOT APPLICABLE

- ITEM NOT ILLUSTRATED

BOEING PROPRIETARY - Copyright © - Unpublished Work - See title page for details.

FIG ITEM	PART NUMBER	1 2 3 4 5 6 7 NOMENCLATURE	EFFECT FROM TO	UNITS PER ASSY
30				
760	233T3217-300	.PANEL ASSY-ANTI-COLLISION AND LDG LTS CONT SUPPLIER CODE: V89954 ELECTRICAL EQUIP NUMBER: M00056 COMPONENT MAINT MANUAL REF: 33-44-72 QUALIFIED I/W DATA: THE 233T3217-300 PANEL ASSY IS I/W THE 233T3217-41 PANEL ASSY T/W THE S233T100-6030 LIGHTPLATE. FOR OTHER SYS DETAILS SEE: 33-13-01-02 33-41-52-03 33-42-52-03 33-43-51-03 33-44-51-04	011100	1
- 765	233T3217-41	..PANEL ASSY- SUPPLIER CODE: V89954 COMPONENT MAINT MANUAL REF: 33-44-72 QUALIFIED I/W DATA: THE 233T3217-300 PANEL ASSY IS I/W THE 233T3217-41 PANEL ASSY T/W THE S233T100-6030 LIGHTPLATE.	011100	RF
770	NAS514P632-5	...SCREW	011100	4
775	BACS12HN06-6	...SCREW- OPTIONAL PART: NAS1801-06-6	011100	4
775	NAS1801-06-6	...SCREW- OPTIONAL PART: BACS12HN06-6	011100	4
780	BACW10EC06CD	...WASHER- OPTIONAL PART: BACW10EC06S	011100	4
780	BACW10EC06S	...WASHER- OPTIONAL PART: BACW10EC06CD	011100	4
785	NAS620-6	...WASHER	011100	8
790	233T6200-70	...BRACKET-SPRT	011100	1
795	69B46200-5	...STANDOFF	011100	2
800	233T6200-66	...STANDOFF	011100	2

MISSING ITEM NUMBERS NOT APPLICABLE

- ITEM NOT ILLUSTRATED

BOEING PROPRIETARY - Copyright © - Unpublished Work - See title page for details.

FIG ITEM	PART NUMBER	1 2 3 4 5 6 7 NOMENCLATURE	EFFECT FROM TO	UNITS PER ASSY
30				
805	233N3210-7	...BASEPLATE ASSY-	011100	1
		SUPPLIER CODE:		
		V89954		
810	BACS21DD1B	....STUD ASSY	011100	4
		SUPPLIER CODE:		
		V08524		
		SPECIFICATION NUMBER:		
		BACS21DD1B		
815	SF6G6CBB5D	....NUT	011100	4
		SUPPLIER CODE:		
		V12324		
		SPECIFICATION NUMBER:		
		BACN10PA06-6		
820	233N3210-8	....BASEPLATE-	011100	1
		SUPPLIER CODE:		
		V89954		

MISSING ITEM NUMBERS NOT APPLICABLE

– ITEM NOT ILLUSTRATED

BOEING PROPRIETARY - Copyright © - Unpublished Work - See title page for details.

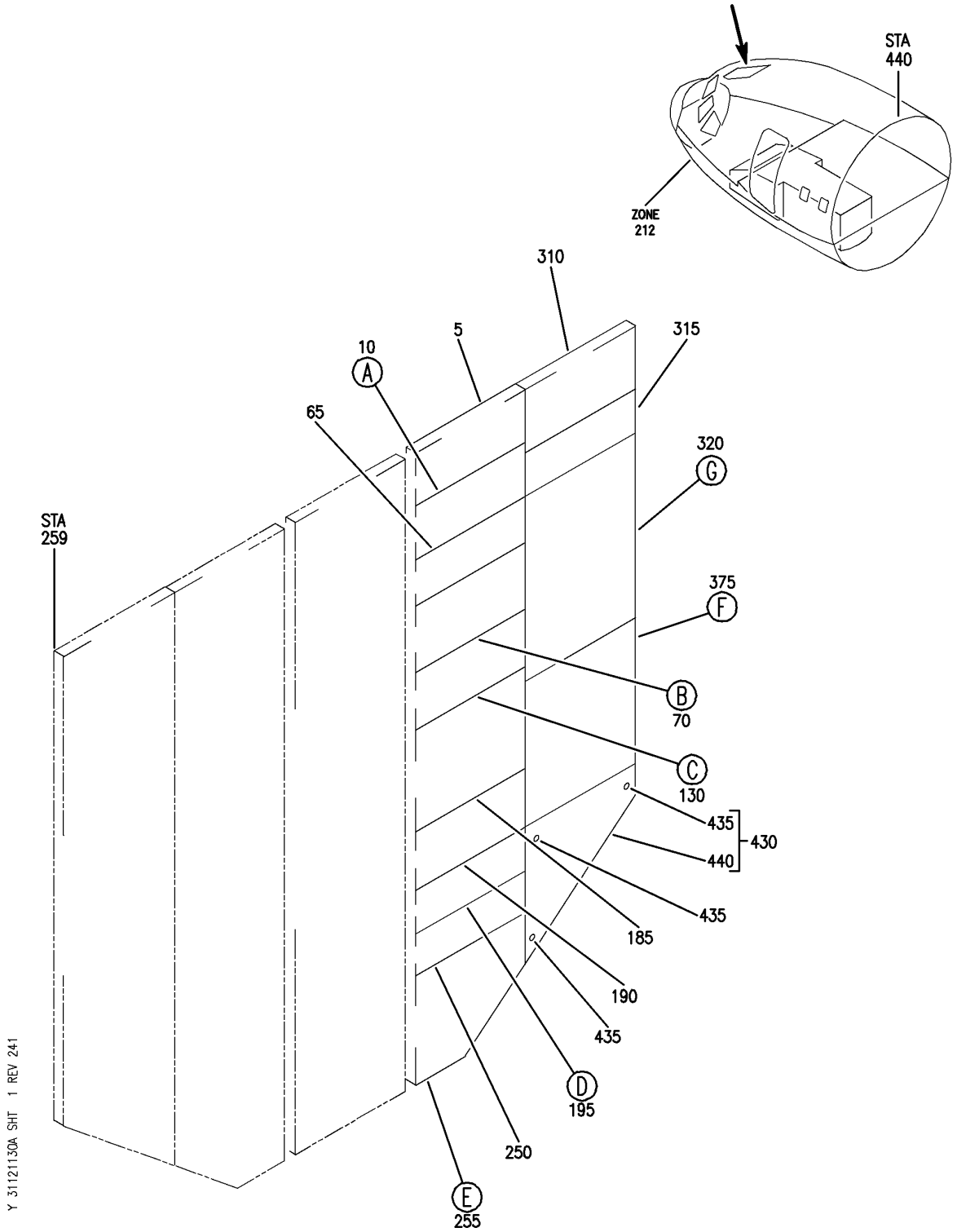

PANEL INSTL-P5 OVHD (INDICATING/RECORDING SYSTEM ONLY)
FIGURE 30A (SHEET 1)

BOEING PROPRIETARY - Copyright © - Unpublished Work - See title page for details.

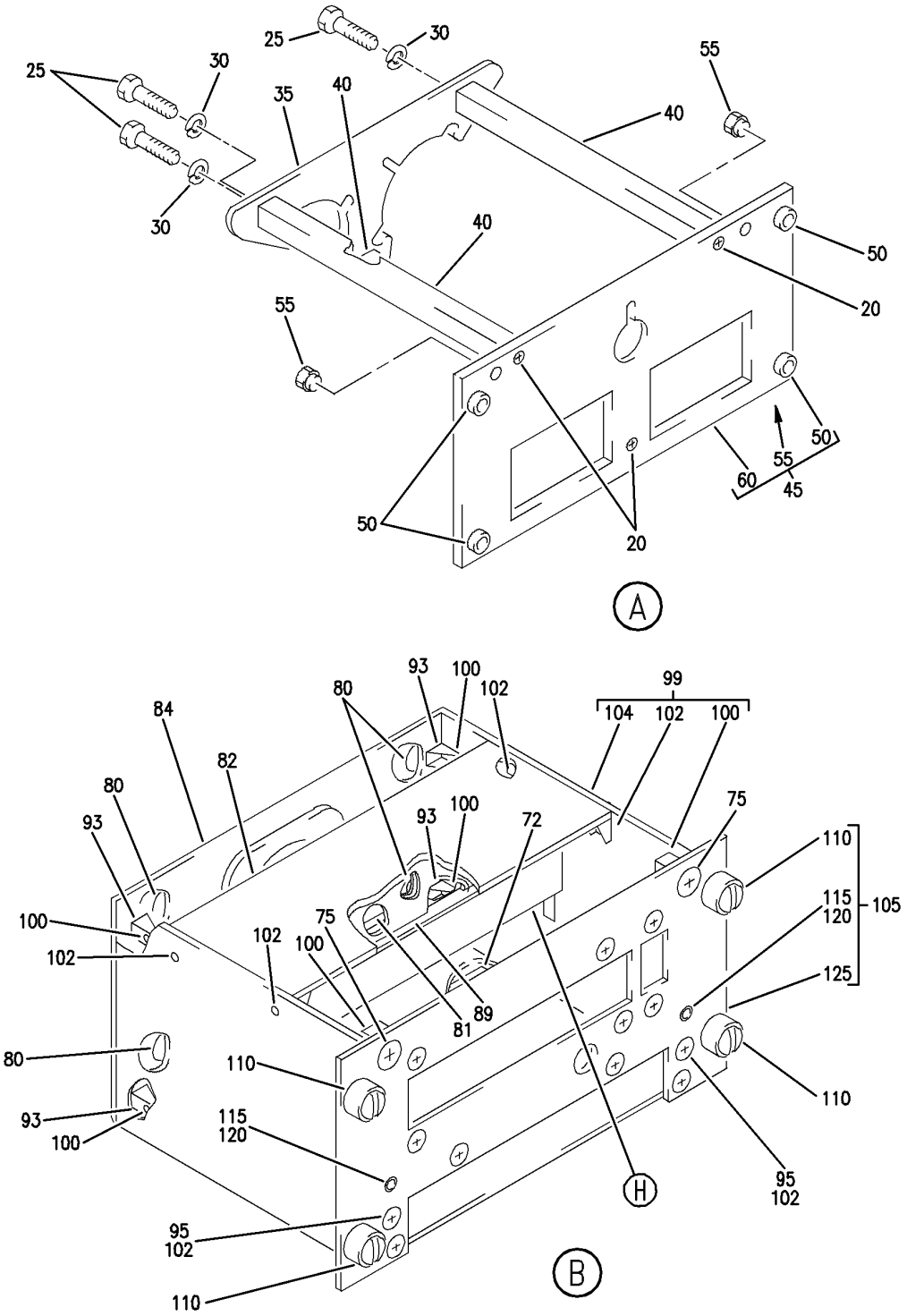

PANEL INSTL-P5 OVHD (INDICATING/RECORDING SYSTEM ONLY)
FIGURE 30A (SHEET 2)

BOEING PROPRIETARY - Copyright © - Unpublished Work - See title page for details.

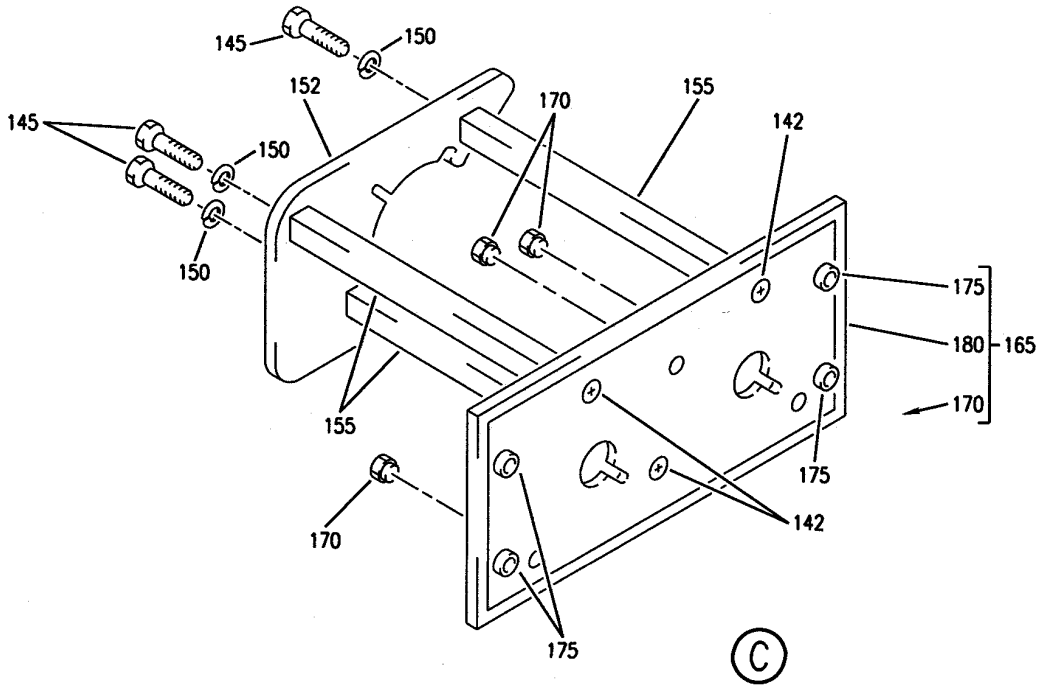

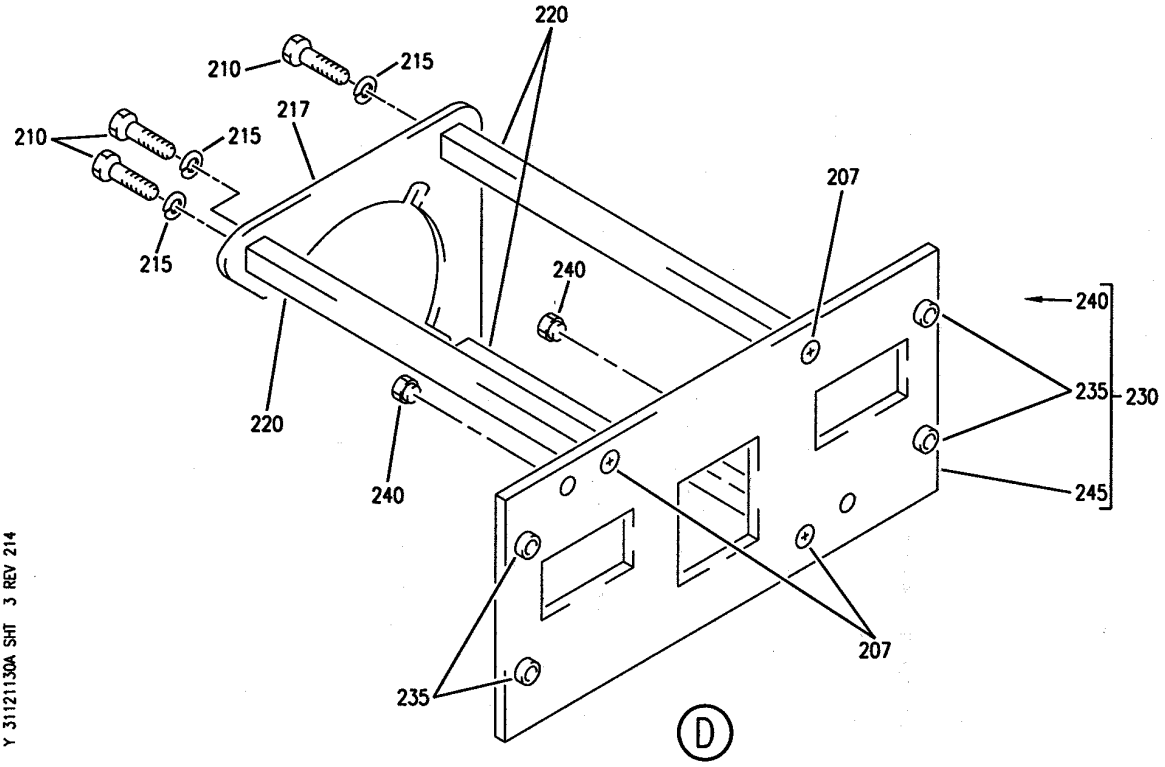

Y 31121130A SHT 3 REV 214

PANEL INSTL-P5 OVHD (INDICATING/RECORDING SYSTEM ONLY)
FIGURE 30A (SHEET 3)

BOEING PROPRIETARY - Copyright © - Unpublished Work - See title page for details.

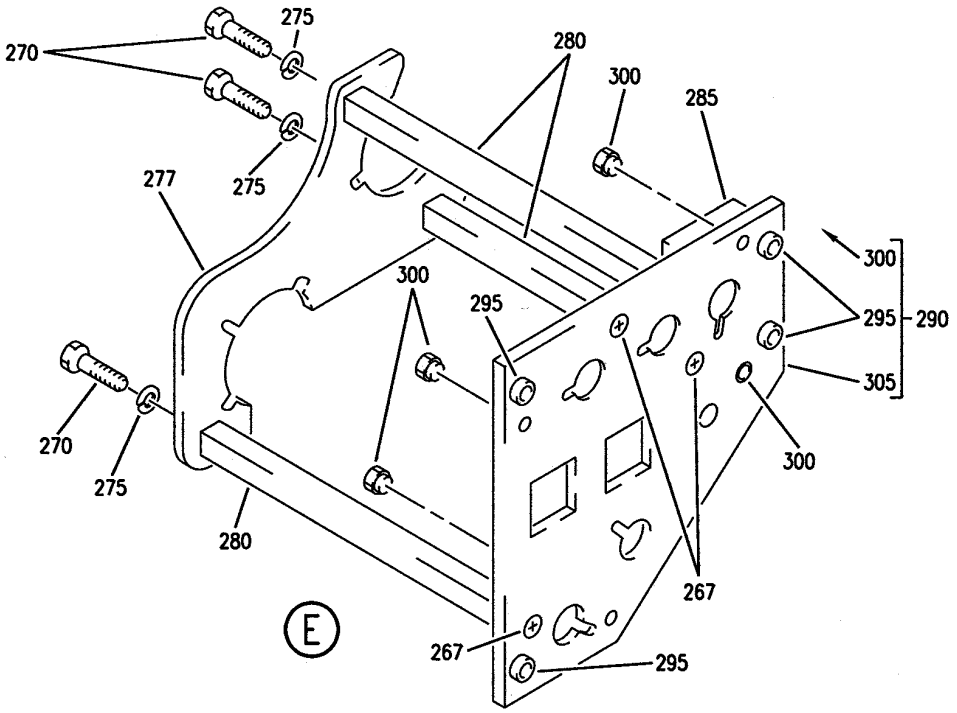

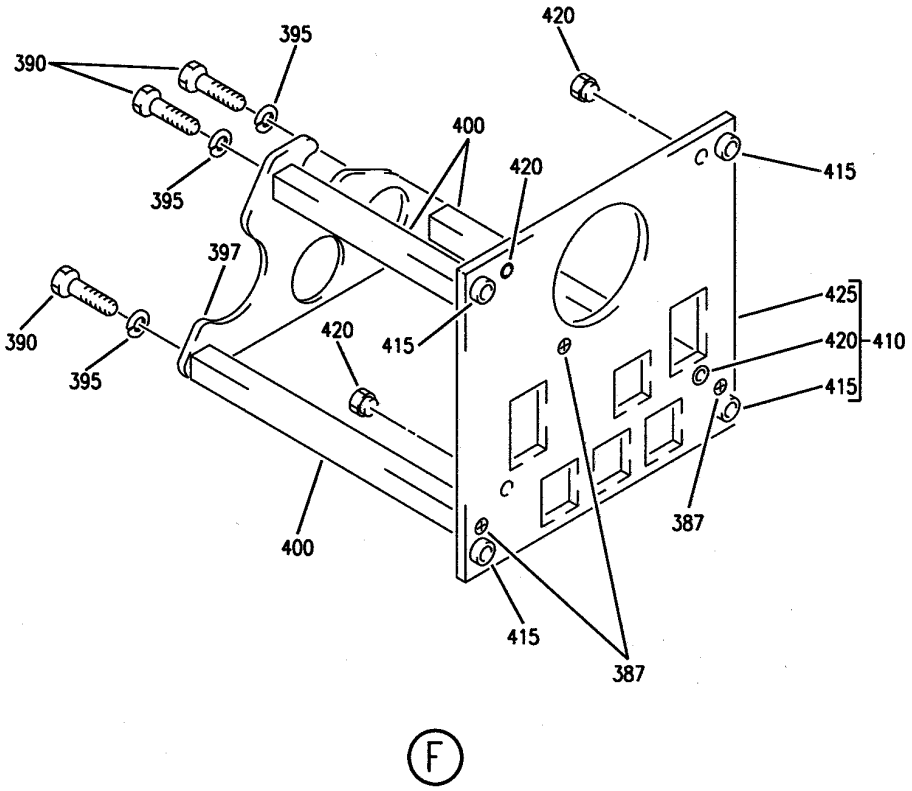

Y 31121130A SHT 4 REV 214

PANEL INSTL-P5 OVHD (INDICATING/RECORDING SYSTEM ONLY)
FIGURE 30A (SHEET 4)

BOEING PROPRIETARY - Copyright © - Unpublished Work - See title page for details.

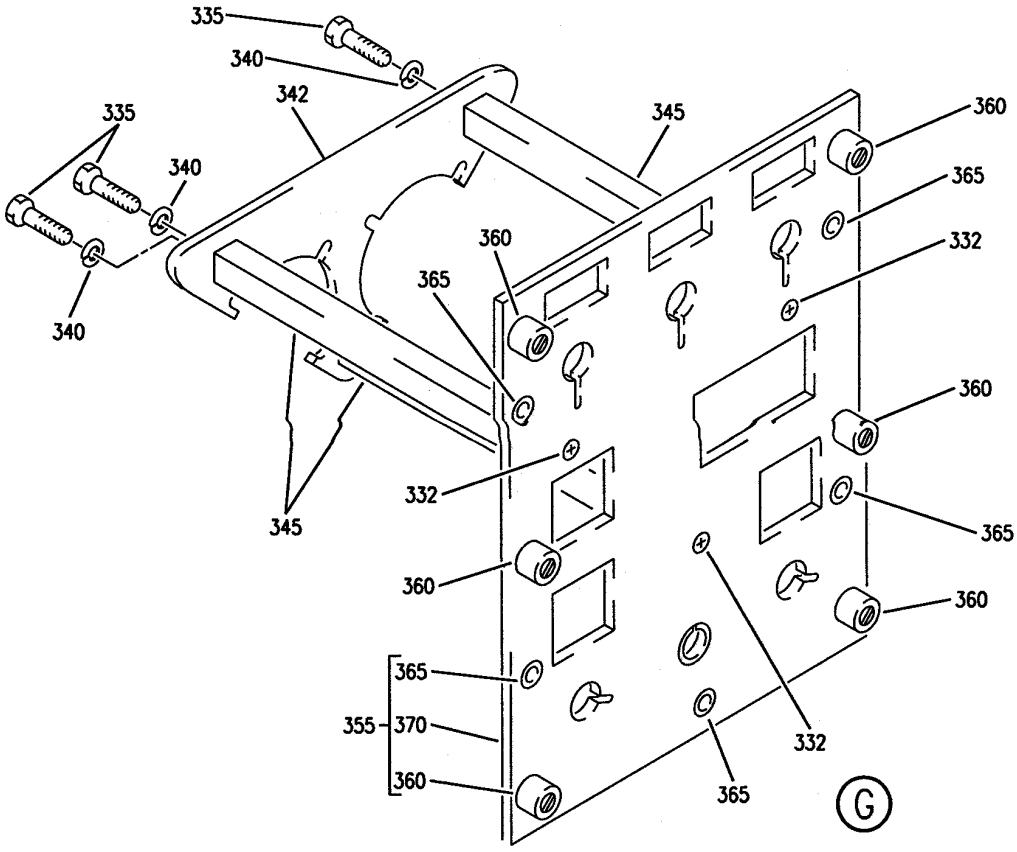

Y 31121130A SHT 5 REV 214

PANEL INSTL-P5 OVHD (INDICATING/RECORDING SYSTEM ONLY)
FIGURE 30A (SHEET 5)

BOEING PROPRIETARY - Copyright © - Unpublished Work - See title page for details.

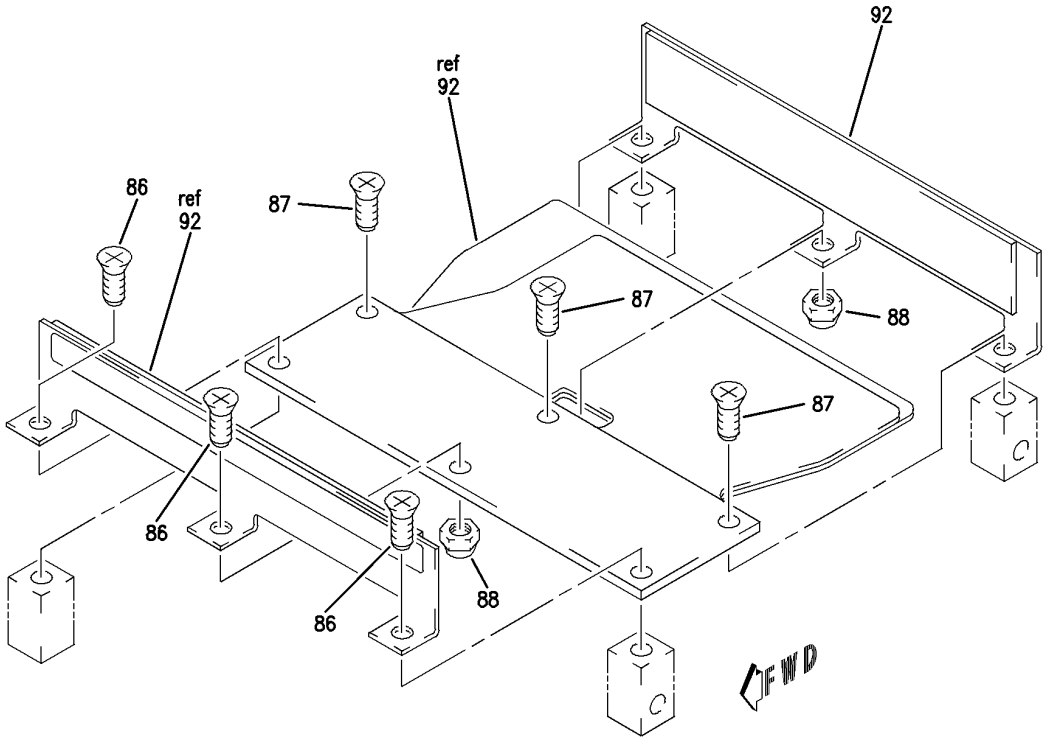

H

Y 31121130A SHT 6 REV 241

PANEL INSTL-P5 OVHD (INDICATING/RECORDING SYSTEM ONLY)
FIGURE 30A (SHEET 6)

BOEING PROPRIETARY - Copyright © - Unpublished Work - See title page for details.

FIG ITEM	PART NUMBER	1 2 3 4 5 6 7 NOMENCLATURE	EFFECT FROM TO	UNITS PER ASSY
30A				
		PANEL INSTL-P5 OVHD (INDICATING/RECORDING SYSTEM ONLY)	011100	
- 1	233N3101-1	PANEL INSTL-P5 OVHD (INDICATING/RECORDING SYSTEMS ONLY) VARIABLE DRAWING REF: 233N3101-5142 FOR NHA/OTHER SYS DET SEE: 25-10-00-05A	011100	RF
5	BACP10U0262T	.PANEL	011100	1
10	233N3212-300	.PANEL ASSY-WINDOW HEAT SUPPLIER CODE: V89954 ELECTRICAL EQUIP NUMBER: M10395 COMPONENT MAINT MANUAL REF: 30-41-71 QUALIFIED I/W DATA: THE 233N3212-300 PANEL ASSY IS I/W THE 233N3212-11 PANEL ASSY T/W THE S233T100-1073 LIGHTPLATE FOR OTHER SYS DETAILS SEE: 30-41-51-02 33-13-01-02	011100	1
- 15	233N3212-11	..PANEL ASSY- SUPPLIER CODE: V89954 COMPONENT MAINT MANUAL REF: 30-41-71 QUALIFIED I/W DATA: THE 233N3212-300 PANEL ASSY IS I/W THE 233N3212-11 PANEL ASSY T/W THE S233T100-1073 LIGHTPLATE	011100	RF
20	NAS514P632-5	...SCREW	011100	3
25	NAS1801-06-5	...SCREW	011100	3
30	MS35338-41	...WASHER	011100	3
35	233N3250-11	...BRACKET-CONN.	011100	1
40	69B46200-12	...STANDOFF	011100	3
45	233N3212-2	...BASEPLATE ASSY- SUPPLIER CODE: V89954	011100	1

MISSING ITEM NUMBERS NOT APPLICABLE

- ITEM NOT ILLUSTRATED

BOEING PROPRIETARY - Copyright © - Unpublished Work - See title page for details.

FIG ITEM	PART NUMBER	1 2 3 4 5 6 7 NOMENCLATURE	EFFECT FROM TO	UNITS PER ASSY
30A				
50	PFSC35-38ASEMB	....STUD ASSY- SUPPLIER CODE: V72794 SPECIFICATION NUMBER: BACS21DX1B	011100	4
55	SF6G6CBB5D	....NUT SUPPLIER CODE: V12324 SPECIFICATION NUMBER: BACN10PA06-6	011100	2
60	233N3212-3	....BASEPLATE- SUPPLIER CODE: V89954	011100	1
65	622-6827-002	.PANEL ASSY-HF CONT (CUSTOMER FURNISHED) SUPPLIER CODE: V4V792 POSITION DATA: R ELECTRICAL EQUIP NUMBER: M00082 COMPONENT MAINT MANUAL REF: 23-10-73 FOR BREAKDOWN SEE: 23-11-02-01	011100	RF
65	622-5432-002	.PANEL ASSY-HF CONT (CUSTOMER FURNISHED) SUPPLIER CODE: V4V792 POSITION DATA: R ELECTRICAL EQUIP NUMBER: M00082 COMPONENT MAINT MANUAL REF: 23-10-71 FOR BREAKDOWN SEE: 23-11-02-01	011100	RF
70	285T0024-47	.MODULE ASSY-PILOTS CALL PNL SUPPLIER CODE: V89954 ELECTRICAL EQUIP NUMBER: M00051 COMPONENT MAINT MANUAL REF: 23-42-62 FOR OTHER SYS DETAILS SEE: 11-31-10-24 23-42-02-09 33-13-01-02	011100	1

MISSING ITEM NUMBERS NOT APPLICABLE

– ITEM NOT ILLUSTRATED

BOEING PROPRIETARY - Copyright © - Unpublished Work - See title page for details.

FIG ITEM	PART NUMBER	1 2 3 4 5 6 7 NOMENCLATURE	EFFECT FROM TO	UNITS PER ASSY
30A				
72	BAC27TEX0933	..MARKER-ALUMINUM FOIL SUPPLIER CODE: V89954	011100	1
75	NAS514P632-5	..SCREW	011100	2
80	NAS1801-06-5	..SCREW	011100	4
82	285T0158-29	..COVER ASSY- SUPPLIER CODE: V89954 ATTACHING PARTS	011100	1
- 83	NAS514P440-5	..SCREW -------*-------	011100	4
84	285T0158-7	..PANEL- SUPPLIER CODE: V89954	011100	1
86	MS35214-13	..SCREW	011100	3
87	NAS514P440-5	..SCREW	011100	3
88	92-1660-40	..NUT SUPPLIER CODE: V72962 SPECIFICATION NUMBER: BACN10DN40 OPTIONAL PART: 92-1660-440 V15653	011100	2
89	285T0158-25	..BRACKET ASSY- SUPPLIER CODE: V89954	011100	1
91	BAC27TEX1986	...DECAL- SUPPLIER CODE: V89954	011100	1
92	285T0158-27	..BRACKET ASSY- SUPPLIER CODE: V89954	011100	1
93	285T0158-21	..BLOCK-MTG SUPPLIER CODE: V89954 ATTACHING PARTS	011100	4
- 94	NAS514P440-5	..SCREW -------*-------	011100	4
95	NAS514P440-5	..SCREW	011100	2
99	285T0158-23	..BRACKET ASSY- SUPPLIER CODE: V89954	011100	1
100	MF6000-06	...NUTPLATE SUPPLIER CODE: V15653 SPECIFICATION NUMBER: BACN10KJ06	011100	6

MISSING ITEM NUMBERS NOT APPLICABLE

- ITEM NOT ILLUSTRATED

BOEING PROPRIETARY - Copyright © - Unpublished Work - See title page for details.

FIG ITEM	PART NUMBER	1 2 3 4 5 6 7 NOMENCLATURE	EFFECT FROM TO	UNITS PER ASSY
30A				
		ATTACHING PARTS		
- 101	BACR15BA3AD	...RIVET-	011100	12
		SIZE DETERMINED ON INSTL.		
		-------*-------		
102	F22A27M22-40	...NUT-	011100	6
		SUPPLIER CODE:		
		V0217B		
		ATTACHING PARTS		
- 103	BACR15BA2AD	...RIVET-	011100	12
		SIZE DETERMINED ON INSTL.		
		-------*-------		
104	285T0158-22	...BRACKET-	011100	1
		SUPPLIER CODE:		
		V89954		
105	285T0157-49	..PANEL ASSY-	011100	1
		SUPPLIER CODE:		
		V89954		
110	PFSC35-38ASEMB	...STUD ASSY	011100	4
		SUPPLIER CODE:		
		V72794		
		SPECIFICATION NUMBER:		
		BACS21DX1B		
115	SF6G6CBB5D	...NUT-	011100	2
		SUPPLIER CODE:		
		V12324		
		SPECIFICATION NUMBER:		
		BACN10PA06-6		
		OPTIONAL PART:		
		SF6G6CBB5D		
		V12324		
120	SF6G6CBB5D	...NUT-	011100	2
		SUPPLIER CODE:		
		V12324		
		OPTIONAL PART:		
		BACN10PA06-6		
125	285T0157-50	...PANEL-	011100	1
		SUPPLIER CODE:		
		V89954		
130	233T3216-300	.PANEL ASSY-PASS. SIGN CONT	011100	1
		SUPPLIER CODE:		
		V89954		
		ELECTRICAL EQUIP NUMBER:		
		M00052		
		COMPONENT MAINT MANUAL REF:		
		33-24-02		
		FOR OTHER SYS DETAILS SEE:		
		33-13-01-02		
		33-24-51-02		

MISSING ITEM NUMBERS NOT APPLICABLE

– ITEM NOT ILLUSTRATED

BOEING PROPRIETARY - Copyright © - Unpublished Work - See title page for details.

FIG ITEM	PART NUMBER	1 2 3 4 5 6 7 NOMENCLATURE	EFFECT FROM TO	UNITS PER ASSY
30A				
- 135	233T3216-10	..PANEL ASSY- SUPPLIER CODE: V89954 COMPONENT MAINT MANUAL REF: 33-24-02	011100	RF
142	NAS514P632-5	...SCREW	011100	3
145	NAS1801-06-5	...SCREW	011100	3
150	MS35338-41	...WASHER	011100	3
155	69B46200-9	...STANDOFF	011100	3
165	233T3216-2	...BASEPLATE ASSY- SUPPLIER CODE: V89954	011100	1
170	SF6G6CBB5D	....NUT SUPPLIER CODE: V12324 SPECIFICATION NUMBER: BACN10PA06-6	011100	3
175	BACS21DD1B	....STUD ASSY SUPPLIER CODE: V08524 SPECIFICATION NUMBER: BACS21DD1B	011100	4
180	233T3216-3	....BASEPLATE- SUPPLIER CODE: V89954	011100	1
185	130502-7	.PANEL ASSY-CAB. ALTITUDE CONT SUPPLIER CODE: V64547 FUNCTIONAL DESCRIPTION: SELECTOR CONTAINS CONTROLS AND CIRCUITRY NECESSARY FOR AUTOMATIC OR MANUAL PRESSURE SELECTION SPECIFICATION NUMBER: S210T160-72 ELECTRICAL EQUIP NUMBER: M00013 COMPONENT MAINT MANUAL REF: 21-31-50 FOR BREAKDOWN SEE: 21-31-01-01	011100	RF

MISSING ITEM NUMBERS NOT APPLICABLE

– ITEM NOT ILLUSTRATED

BOEING PROPRIETARY - Copyright © - Unpublished Work - See title page for details.

FIG ITEM	PART NUMBER	1 2 3 4 5 6 7 NOMENCLATURE	EFFECT FROM TO	UNITS PER ASSY
30A				
185	130502-6	.PANEL ASSY-CAB. ALTITUDE SUPPLIER CODE: V64547 SPECIFICATION NUMBER: S210T160-62 ELECTRICAL EQUIP NUMBER: M00013 COMPONENT MAINT MANUAL REF: 21-31-50 FOR BREAKDOWN SEE: 21-31-01-01	011100	RF
185	130502-5	.PANEL ASSY-CAB. ALTITUDE SUPPLIER CODE: V64547 SPECIFICATION NUMBER: S210T160-52 ELECTRICAL EQUIP NUMBER: M00013 COMPONENT MAINT MANUAL REF: 21-31-50 FOR BREAKDOWN SEE: 21-31-01-01	011100	RF
185	130502-4	.PANEL ASSY-CAB. ALTITUDE SUPPLIER CODE: V64547 SPECIFICATION NUMBER: S210T160-42 ELECTRICAL EQUIP NUMBER: M00013 COMPONENT MAINT MANUAL REF: 21-31-50 FOR BREAKDOWN SEE: 21-31-01-01	011100	RF

MISSING ITEM NUMBERS NOT APPLICABLE

– ITEM NOT ILLUSTRATED

BOEING PROPRIETARY - Copyright © - Unpublished Work - See title page for details.

FIG ITEM	PART NUMBER	1 2 3 4 5 6 7 NOMENCLATURE	EFFECT FROM TO	UNITS PER ASSY
30A				
190	SETL0C420M	.PANEL ASSY-CAB. PRESSURE GAUGES SUPPLIER CODE: V61349 FUNCTIONAL DESCRIPTION: PROVIDES CABIN PRESSURE RATE OF CLIMB OR DESCENT CABIN TO AMBIENT DIFFERENTIAL PRESSURE AND CABIN ALTITUDE SPECIFICATION NUMBER: S231N210-14 MISCELLANEOUS DATA: PT033D SENSOR TOGETHER WITH SETL0C420M OR SETL0C420L PANEL MAY REPLACE PT033A SENSOR TOGETHER WITH SETL0C420H PANEL ELECTRICAL EQUIP NUMBER: M00019 COMPONENT MAINT MANUAL REF: 21-33-07 QUALIFIED I/W DATA: INSTALLED AS A SET, PT033D T/W SETL0C420M OR SETL0C420L, I/W PT033A T/W SETL0C420H FOR BREAKDOWN SEE: 21-33-51-02	011100	RF
195	233N3203-300	.PANEL ASSY-EQPT COOLING SUPPLIER CODE: V89954 ELECTRICAL EQUIP NUMBER: M10067 COMPONENT MAINT MANUAL REF: 21-58-71 QUALIFIED I/W DATA: 23N3203-300 PANEL ASSY IS I/W 233N3203-32 PANEL ASSY T/W S233T100-6045 LIGHTPLATE PRE ALERT SB: 33A0044 FOR OTHER SYS DETAILS SEE: 21-33-51-02 21-58-19-12 21-58-51-02 33-13-01-02	011100	1

MISSING ITEM NUMBERS NOT APPLICABLE

— ITEM NOT ILLUSTRATED

BOEING PROPRIETARY - Copyright © - Unpublished Work - See title page for details.

FIG ITEM	PART NUMBER	1 2 3 4 5 6 7 NOMENCLATURE	EFFECT FROM TO	UNITS PER ASSY
30A				
195	233N3203-1300	.PANEL ASSY-EQPT COOLING SUPPLIER CODE: V89954 ELECTRICAL EQUIP NUMBER: M10067 COMPONENT MAINT MANUAL REF: 21-58-71 POST ALERT SB: 33A0044 FOR OTHER SYS DETAILS SEE: 21-33-51-02 21-58-19-12 21-58-51-02 33-13-01-02	011100	1
195	233N3203-337	.PANEL ASSY-EQPT COOLING SUPPLIER CODE: V89954 ELECTRICAL EQUIP NUMBER: M10067 COMPONENT MAINT MANUAL REF: 21-58-71 FOR OTHER SYS DETAILS SEE: 21-33-51-02 21-58-19-12 21-58-51-02 33-13-01-02	011100	1
- 200	233N3203-32	..PANEL ASSY- SUPPLIER CODE: V89954 COMPONENT MAINT MANUAL REF: 21-58-71 QUALIFIED I/W DATA: 233N3203-300 PANEL ASSY IS I/W 233N3203-32 PANEL ASSY T/W S233T100-6045 LIGHTPLATE USED ON: 233N3203-300 PRE ALERT SB: 33A0044	011100	RF
- 200	233N3203-1032	..PANEL ASSY- SUPPLIER CODE: V89954 COMPONENT MAINT MANUAL REF: 21-58-71 USED ON: 233N3203-1300 POST ALERT SB: 33A0044	011100	RF

MISSING ITEM NUMBERS NOT APPLICABLE

– ITEM NOT ILLUSTRATED

BOEING PROPRIETARY - Copyright © - Unpublished Work - See title page for details.

FIG ITEM	PART NUMBER	1 2 3 4 5 6 7 NOMENCLATURE	EFFECT FROM TO	UNITS PER ASSY
30A				
- 200	233N3203-37	..PANEL ASSY-	011100	RF
		SUPPLIER CODE:		
		V89954		
		COMPONENT MAINT MANUAL REF:		
		21-58-71		
		USED ON:		
		233N3203-337		
207	NAS514P632-6	...SCREW	011100	3
210	NAS1801-06-5	...SCREW-	011100	3
		OPTIONAL PART:		
		BACS12HN06-5		
		USED ON:		
		233N3203-32		
		233N3203-1032		
210	BACS12HN06-5	...SCREW-	011100	3
		OPTIONAL PART:		
		NAS1801-06-5		
		USED ON:		
		233N3203-32		
		233N3203-1032		
210	BACS12HN06-5	...SCREW-	011100	3
		USED ON:		
		233N3203-37		
215	BACW10EC06S	...WASHER-	011100	3
220	69B46200-11	...STANDOFF	011100	3
230	233N3203-19	...BASEPLATE ASSY-	011100	1
		SUPPLIER CODE:		
		V89954		
235	PFSC35-38ASEMB	....STUD ASSY-	011100	4
		SUPPLIER CODE:		
		V72794		
		SPECIFICATION NUMBER:		
		BACS21DX1B		
240	SF6G6CBB5D	....NUT	011100	2
		SUPPLIER CODE:		
		V12324		
		SPECIFICATION NUMBER:		
		BACN10PA06-6		
245	233N3203-21	....BASEPLATE-	011100	1
		SUPPLIER CODE:		
		V89954		
250	BACP10U0112T	.PANEL ASSY	011100	1

MISSING ITEM NUMBERS NOT APPLICABLE

- ITEM NOT ILLUSTRATED

BOEING PROPRIETARY - Copyright © - Unpublished Work - See title page for details.

FIG ITEM	PART NUMBER	1 2 3 4 5 6 7 NOMENCLATURE	EFFECT FROM TO	UNITS PER ASSY
30A				
255	233N3221-302	.PANEL ASSY-LIGHTING CONT SUPPLIER CODE: V89954 POSITION DATA: R ELECTRICAL EQUIP NUMBER: M10057 COMPONENT MAINT MANUAL REF: 33-11-72 QUALIFIED I/W DATA: 233N3221-302 PANEL ASSY IS I/W 233N3221-61 PANEL ASSY T/W S233T100-6039 LIGHTPLATE AND (3) RD241-119 KNOBS AND (1) BP248-127 KNOB FOR OTHER SYS DETAILS SEE: 33-11-51-15 33-13-02-02 33-13-01-02 33-16-51-02 33-45-53-02 52-51-51-02	011100	1
- 260	233N3221-61	..PANEL ASSY- SUPPLIER CODE: V89954 COMPONENT MAINT MANUAL REF: 33-11-72 QUALIFIED I/W DATA: 233N3221-302 PANEL ASSY IS I/W 233N3221-61 PANEL ASSY T/W S233T100-6039 LIGHTPLATE AND (3) RD241-119 KNOBS AND (1) BP248-127 KNOB	011100	RF
267	NAS514P632-5	...SCREW	011100	3
270	BACS12HN06-5	...SCREW-	011100	3
275	BACW10EC06S	...WASHER-	011100	3
280	69B46200-10	...STANDOFF-SPRT	011100	3
285	65B40112-12	...SPACER- OPTIONAL PART: 233N3221-42 V89954	011100	1
285	233N3221-42	...SPACER- SUPPLIER CODE: V89954 OPTIONAL PART: 65B40112-12	011100	1

MISSING ITEM NUMBERS NOT APPLICABLE

– ITEM NOT ILLUSTRATED

BOEING PROPRIETARY - Copyright © - Unpublished Work - See title page for details.

FIG ITEM	PART NUMBER	1 2 3 4 5 6 7 NOMENCLATURE	EFFECT FROM TO	UNITS PER ASSY
30A				
290	233N3221-33	...BASEPLATE ASSY-	011100	1
		SUPPLIER CODE:		
		V89954		
295	BACS21DD1B	....STUD ASSY-	011100	4
		SUPPLIER CODE:		
		V08524		
		SPECIFICATION NUMBER:		
		BACS21DD1B		
		OPTIONAL PART:		
		BACS21DX1B		
295	PFSC35-38ASEMB	....STUD ASSY-	011100	4
		SUPPLIER CODE:		
		V72794		
		SPECIFICATION NUMBER:		
		BACS21DX1B		
		OPTIONAL PART:		
		BACS21DD1B		
300	SF6G6CBB5D	....NUT	011100	4
		SUPPLIER CODE:		
		V12324		
		SPECIFICATION NUMBER:		
		BACN10PA06-6		
305	233N3221-37	....BASEPLATE-	011100	1
		SUPPLIER CODE:		
		V89954		
310	BACP10U030OT	.PANEL ASSY	011100	1
315	2263-01-1	.INDICATOR ASSY-COMPT TEMP	011100	RF
		SUPPLIER CODE:		
		V52013		
		FUNCTIONAL DESCRIPTION:		
		INDICATOR SHOWS		
		COMPARTMENT TEMPERATURE		
		FOR EA OF THE THREE		
		CABIN ZONES		
		SPECIFICATION NUMBER:		
		S231N211-3		
		ELECTRICAL EQUIP NUMBER:		
		M10078		
		COMPONENT MAINT MANUAL REF:		
		21-61-02		
		FOR BREAKDOWN SEE:		
		21-65-51-01		

MISSING ITEM NUMBERS NOT APPLICABLE

– ITEM NOT ILLUSTRATED

BOEING PROPRIETARY - Copyright © - Unpublished Work - See title page for details.

FIG ITEM	PART NUMBER	1 2 3 4 5 6 7 NOMENCLATURE	EFFECT FROM TO	UNITS PER ASSY
30A				
320	233N3217-300	.PANEL ASSY-AIR CONDITIONING CONT SUPPLIER CODE: V89954 ELECTRICAL EQUIP NUMBER: M10193 COMPONENT MAINT MANUAL REF: 21-51-71 QUALIFIED I/W DATA: THE 233N3217-300 PANEL ASSY IS I/W THE 233N3217-15 PANEL ASSY T/W THE S233T100-6014 LIGHTPLATE AND (2)BP248-127 KNOBS AND (3)BP260-113 KNOBS FOR OTHER SYS DETAILS SEE: 21-25-55-02 21-51-54-02 21-61-04-02 33-13-01-02	011100	1
- 325	233N3217-15	..PANEL ASSY- SUPPLIER CODE: V89954 COMPONENT MAINT MANUAL REF: 21-51-71 QUALIFIED I/W DATA: THE 233N3217-300 PANEL ASSY IS I/W THE 233N3217-15 PANEL ASSY T/W THE S233T100-6014 LIGHTPLATE AND (2) BP248-127 KNOBS AND (3) BP260-113 KNOBS	011100	RF
332	NAS514P632-5	...SCREW	011100	3
335	NAS1801-06-5	...SCREW- OPTIONAL PART: BACS12HN06-5	011100	3
335	BACS12HN06-5	...SCREW- OPTIONAL PART: NAS1801-06-5	011100	3
340	BACW10EC06S	...WASHER-	011100	3
345	69B46200-14	...STANDOFF	011100	3
355	233N3217-2	...BASEPLATE ASSY- SUPPLIER CODE: V89954 OPTIONAL PART: 233N3217-9 V89954	011100	1

MISSING ITEM NUMBERS NOT APPLICABLE

- ITEM NOT ILLUSTRATED

BOEING PROPRIETARY - Copyright © - Unpublished Work - See title page for details.

FIG ITEM	PART NUMBER	1 2 3 4 5 6 7 NOMENCLATURE	EFFECT FROM TO	UNITS PER ASSY
30A				
355	233N3217-9	...BASEPLATE ASSY- SUPPLIER CODE: V89954 OPTIONAL PART: 233N3217-2 V89954	011100	1
360	PFSC35-38ASEMB	....STUD ASSY- SUPPLIER CODE: V72794 SPECIFICATION NUMBER: BACS21DX1B	011100	6
365	SF6G6CBB5D	....NUT SUPPLIER CODE: V12324 SPECIFICATION NUMBER: BACN10PA06-6	011100	5
370	233N3217-3	....BASEPLATE- SUPPLIER CODE: V89954 USED ON: 233N3217-2	011100	1
370	233N3217-10	....BASEPLATE- SUPPLIER CODE: V89954 USED ON: 233N3217-9	011100	1
375	233N3215-300	.PANEL ASSY-BLEED AIR SUPPLIER CODE: V89954 ELECTRICAL EQUIP NUMBER: M10259 COMPONENT MAINT MANUAL REF: 36-11-71 QUALIFIED I/W DATA: THE 233N3215-300 PANEL ASSY IS I/W 233N3215-16 PANEL ASSY T/W THE S233T100-6009 LIGHTPLATE PRE ALERT SB: 33A0044 FOR OTHER SYS DETAILS SEE: 26-18-51-03 33-13-01-02 36-11-04-03 36-21-00-03 36-21-02-04 36-22-51-02 49-52-00-03 75-32-00-03	011100	1

MISSING ITEM NUMBERS NOT APPLICABLE

– ITEM NOT ILLUSTRATED

BOEING PROPRIETARY - Copyright © - Unpublished Work - See title page for details.

FIG ITEM	PART NUMBER	1 2 3 4 5 6 7 NOMENCLATURE	EFFECT FROM TO	UNITS PER ASSY
30A				
375	233N3215-1300	.PANEL ASSY-BLEED AIR SUPPLIER CODE: V89954 ELECTRICAL EQUIP NUMBER: M10259 COMPONENT MAINT MANUAL REF: 36-11-71 POST ALERT SB: 33A0044 FOR OTHER SYS DETAILS SEE: 26-18-51-03 33-13-01-02 36-11-04-03 36-21-00-03 36-21-02-04 36-22-51-02 49-52-00-03 75-32-00-03	011100	1
375	233N3215-303	.PANEL ASSY-BLEED AIR SUPPLIER CODE: V89954 ELECTRICAL EQUIP NUMBER: M10259 FOR OTHER SYS DETAILS SEE: 26-18-51-03 33-13-01-02 36-11-04-03 36-21-00-03 36-21-02-04 36-22-51-02 49-52-00-03 75-32-00-03	011100	1
- 380	233N3215-16	..PANEL ASSY- SUPPLIER CODE: V89954 MISCELLANEOUS DATA: FOR SPARES PROCURE NEXT HIGHER ASSY COMPONENT MAINT MANUAL REF: 36-11-71 QUALIFIED I/W DATA: THE 233N3215-300 PANEL ASSY IS I/W THE 233N3215-16 PANEL ASSY T/W THE S233T100-6009 LIGHTPLATE PRE ALERT SB: 33A0044	011100	RF

MISSING ITEM NUMBERS NOT APPLICABLE

- ITEM NOT ILLUSTRATED

BOEING PROPRIETARY - Copyright © - Unpublished Work - See title page for details.

FIG ITEM	PART NUMBER	1 2 3 4 5 6 7 NOMENCLATURE	EFFECT FROM TO	UNITS PER ASSY
30A				
- 380	233N3215-1016	..PANEL ASSY- SUPPLIER CODE: V89954 COMPONENT MAINT MANUAL REF: 36-11-71 POST ALERT SB: 33A0044	011100	RF
- 380	233N3215-22	..PANEL ASSY- SUPPLIER CODE: V89954 MISCELLANEOUS DATA: FOR SPARES PROCURE NEXT HIGHER ASSY ELECTRICAL EQUIP NUMBER: M10259 COMPONENT MAINT MANUAL REF: 36-11-71	011100	RF
387	NAS514P632-5	...SCREW- USED ON: 233N3215-16 233N3215-1016	011100	3
387	FH6C5TPKL12BN	...SCREW- SUPPLIER CODE: V12324 USED ON: 233N3215-22	011100	3
390	NAS1801-06-5	...SCREW- USED ON: 233N3215-16 233N3215-1016	011100	3
390	NAS1801-06-5	...SCREW- OPTIONAL PART: BACS12HN06-5 USED ON: 233N3215-22	011100	3
390	BACS12HN06-5	...SCREW- OPTIONAL PART: NAS1801-06-5 USED ON: 233N3215-22	011100	3
395	MS35338-41	...WASHER- USED ON: 233N3215-16 233N3215-1016	011100	3
395	BACW10EC06S	...WASHER- USED ON: 233N3215-22	011100	3
400	69B46200-11	...STANDOFF	011100	3

MISSING ITEM NUMBERS NOT APPLICABLE

- ITEM NOT ILLUSTRATED

BOEING PROPRIETARY - Copyright © - Unpublished Work - See title page for details.

FIG ITEM	PART NUMBER	1 2 3 4 5 6 7 NOMENCLATURE	EFFECT FROM TO	UNITS PER ASSY
30A				
410	233N3215-10	...BASEPLATE ASSY-	011100	1
		SUPPLIER CODE:		
		V89954		
415	PFSC35-38ASEMB	....STUD ASSY-	011100	4
		SUPPLIER CODE:		
		V72794		
		SPECIFICATION NUMBER:		
		BACS21DX1B		
420	SF6G6CBB5D	....NUT	011100	4
		SUPPLIER CODE:		
		V12324		
		SPECIFICATION NUMBER:		
		BACN10PA06-6		
425	233N3215-11	....BASEPLATE-	011100	1
		SUPPLIER CODE:		
		V89954		
430	233T3200-1	.PANEL ASSY	011100	1
435	BACS21DD1B	..STUD ASSY	011100	3
		SUPPLIER CODE:		
		V08524		
		SPECIFICATION NUMBER:		
		BACS21DD1B		
440	233T3200-3	..BASEPLATE	011100	1

MISSING ITEM NUMBERS NOT APPLICABLE

– ITEM NOT ILLUSTRATED

BOEING PROPRIETARY - Copyright © - Unpublished Work - See title page for details.

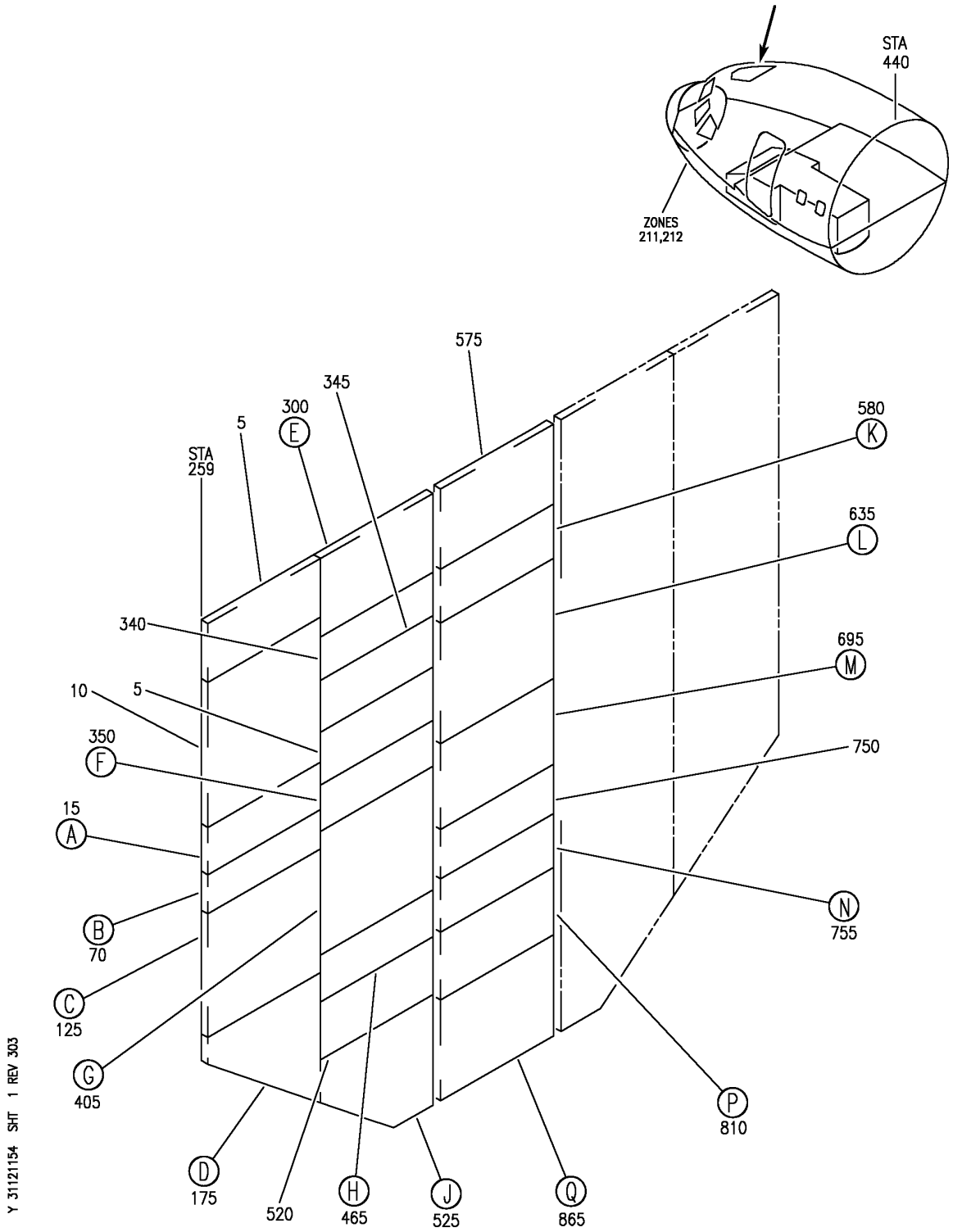

PANEL INSTL-P5 OVHD (INDICATING/RECORDING SYSTEMS ONLY)
FIGURE 54 (SHEET 1)

BOEING PROPRIETARY - Copyright © - Unpublished Work - See title page for details.

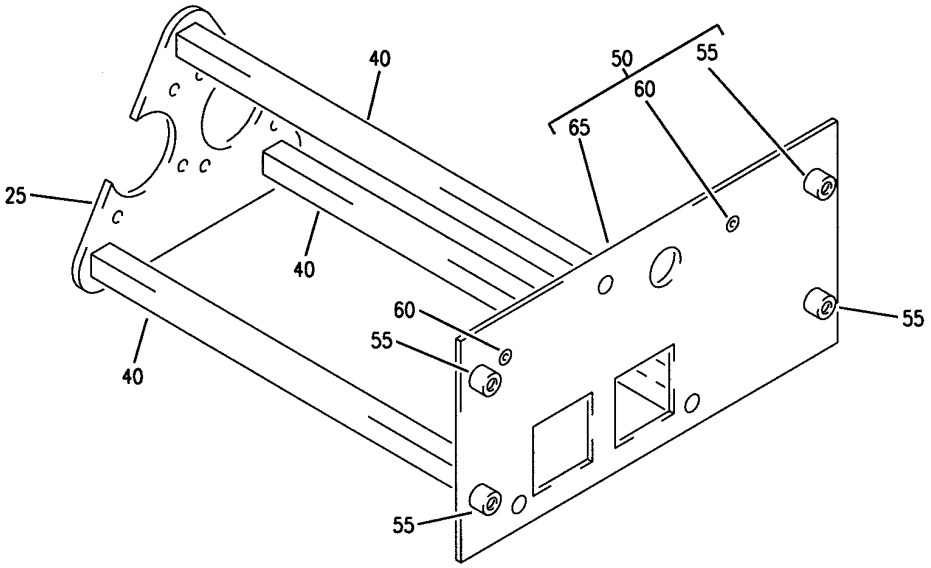

A

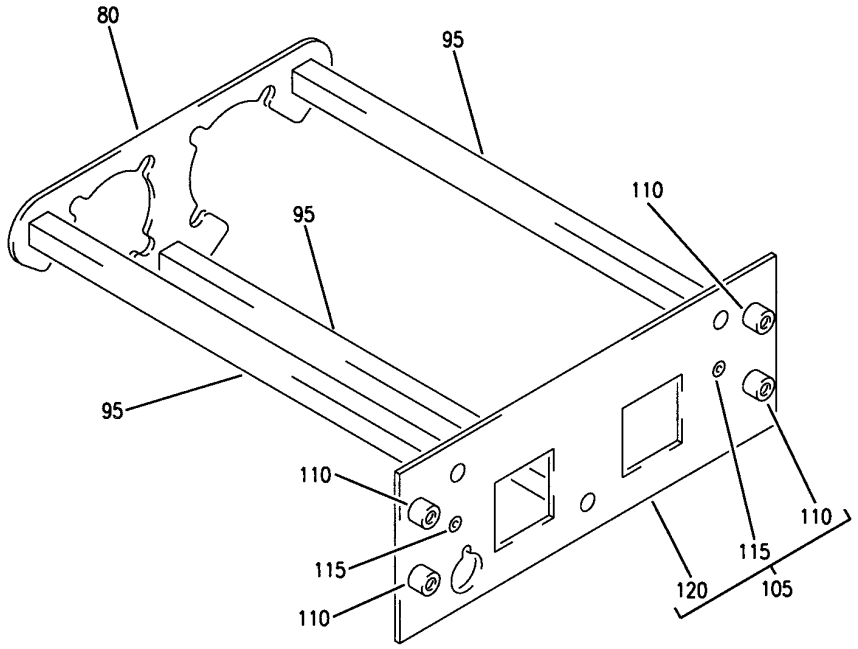

B

Y 31121154 SHT 2 REV 213

PANEL INSTL-P5 OVHD (INDICATING/RECORDING SYSTEMS ONLY)
FIGURE 54 (SHEET 2)

BOEING PROPRIETARY - Copyright © - Unpublished Work - See title page for details.

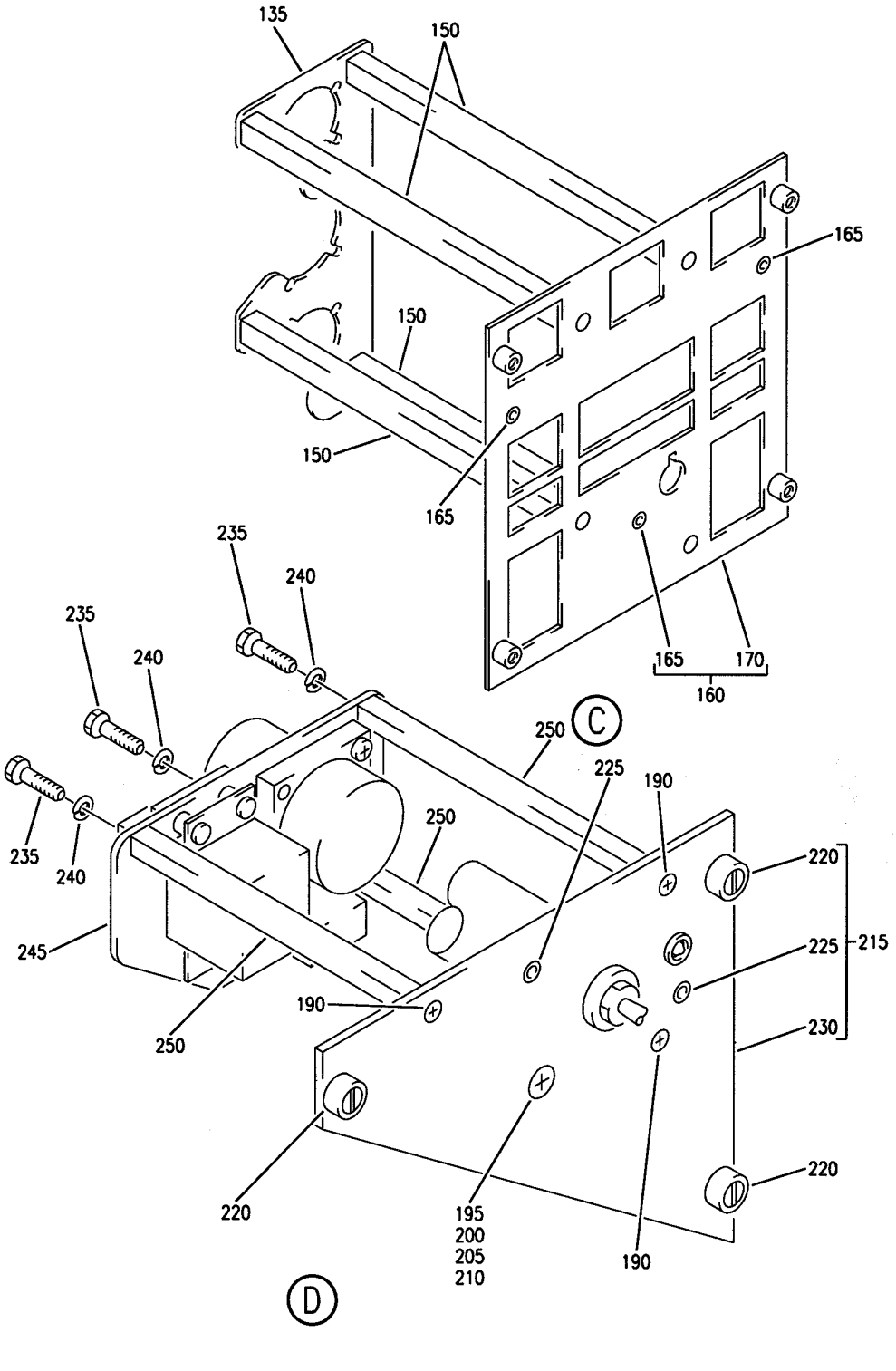

PANEL INSTL-P5 OVHD (INDICATING/RECORDING SYSTEMS ONLY)
FIGURE 54 (SHEET 3)

BOEING PROPRIETARY - Copyright © - Unpublished Work - See title page for details.

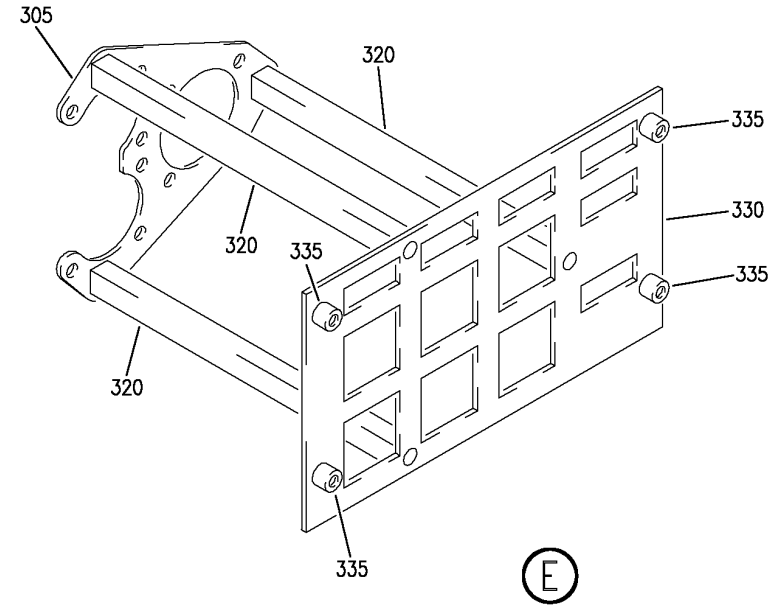

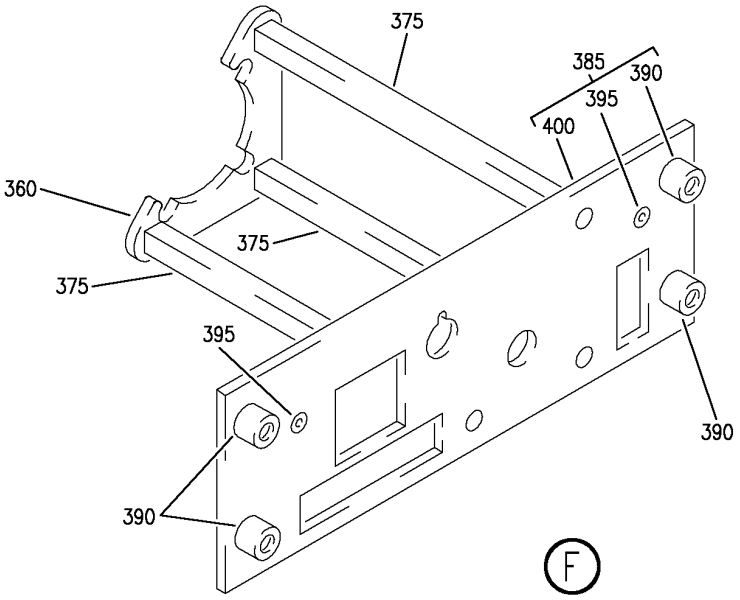

Y 31121154 SHT 4 REV 331

PANEL INSTL-P5 OVHD (INDICATING/RECORDING SYSTEMS ONLY)
FIGURE 54 (SHEET 4)

BOEING PROPRIETARY - Copyright © - Unpublished Work - See title page for details.

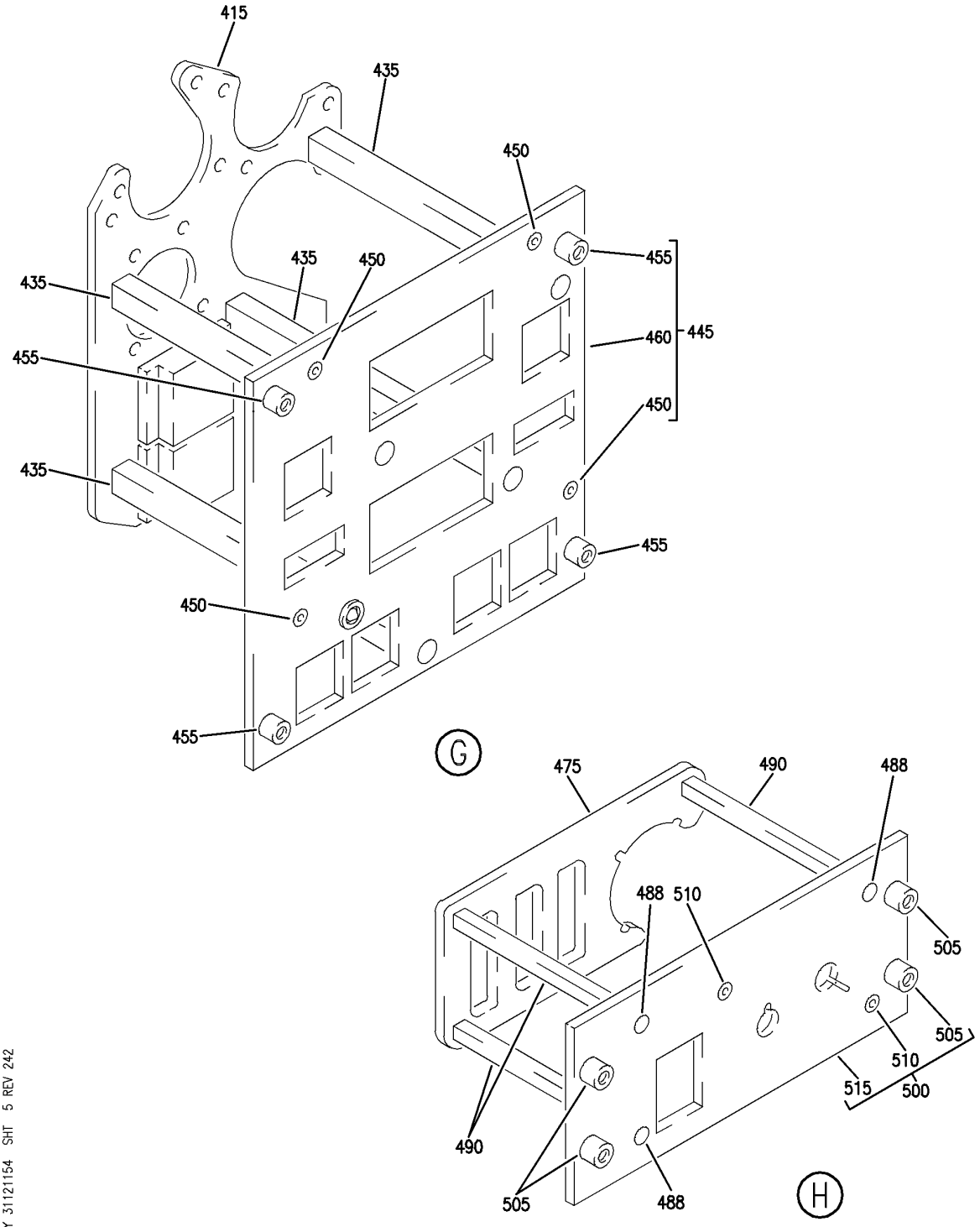

PANEL INSTL-P5 OVHD (INDICATING/RECORDING SYSTEMS ONLY)
FIGURE 54 (SHEET 5)

BOEING PROPRIETARY - Copyright © - Unpublished Work - See title page for details.

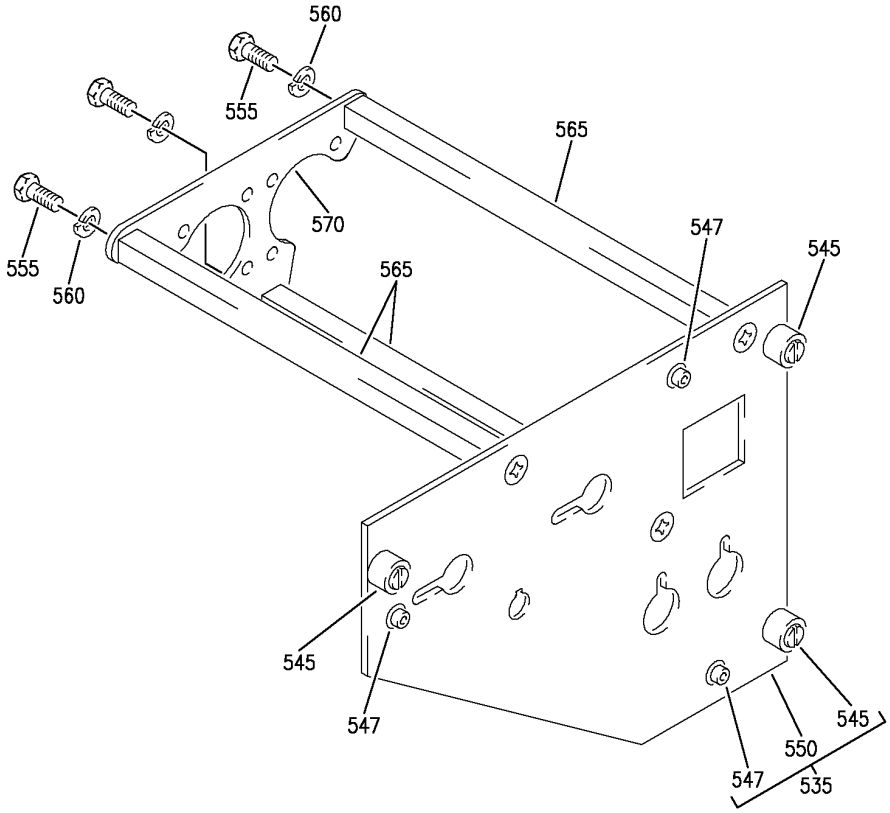

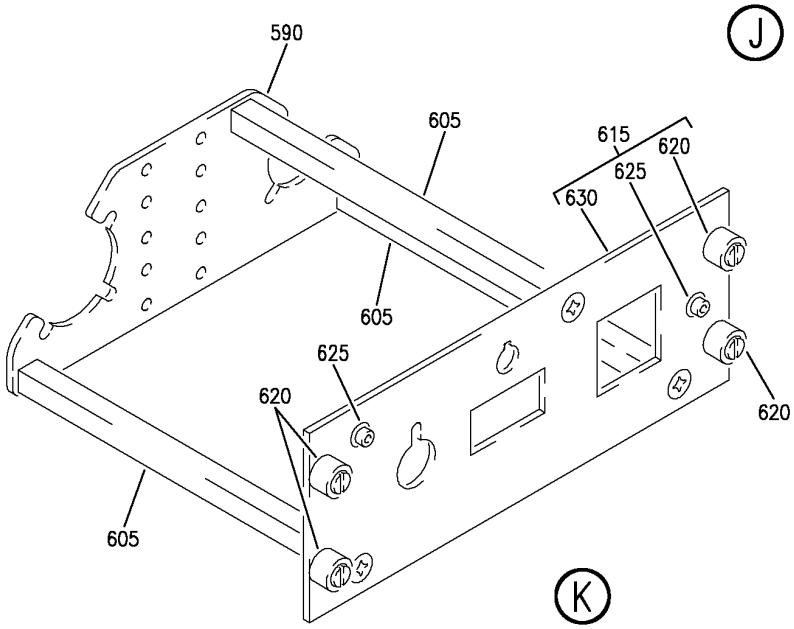

Y 31121154 SHT 6 REV 247

PANEL INSTL-P5 OVHD (INDICATING/RECORDING SYSTEMS ONLY)
FIGURE 54 (SHEET 6)

BOEING PROPRIETARY - Copyright © - Unpublished Work - See title page for details.

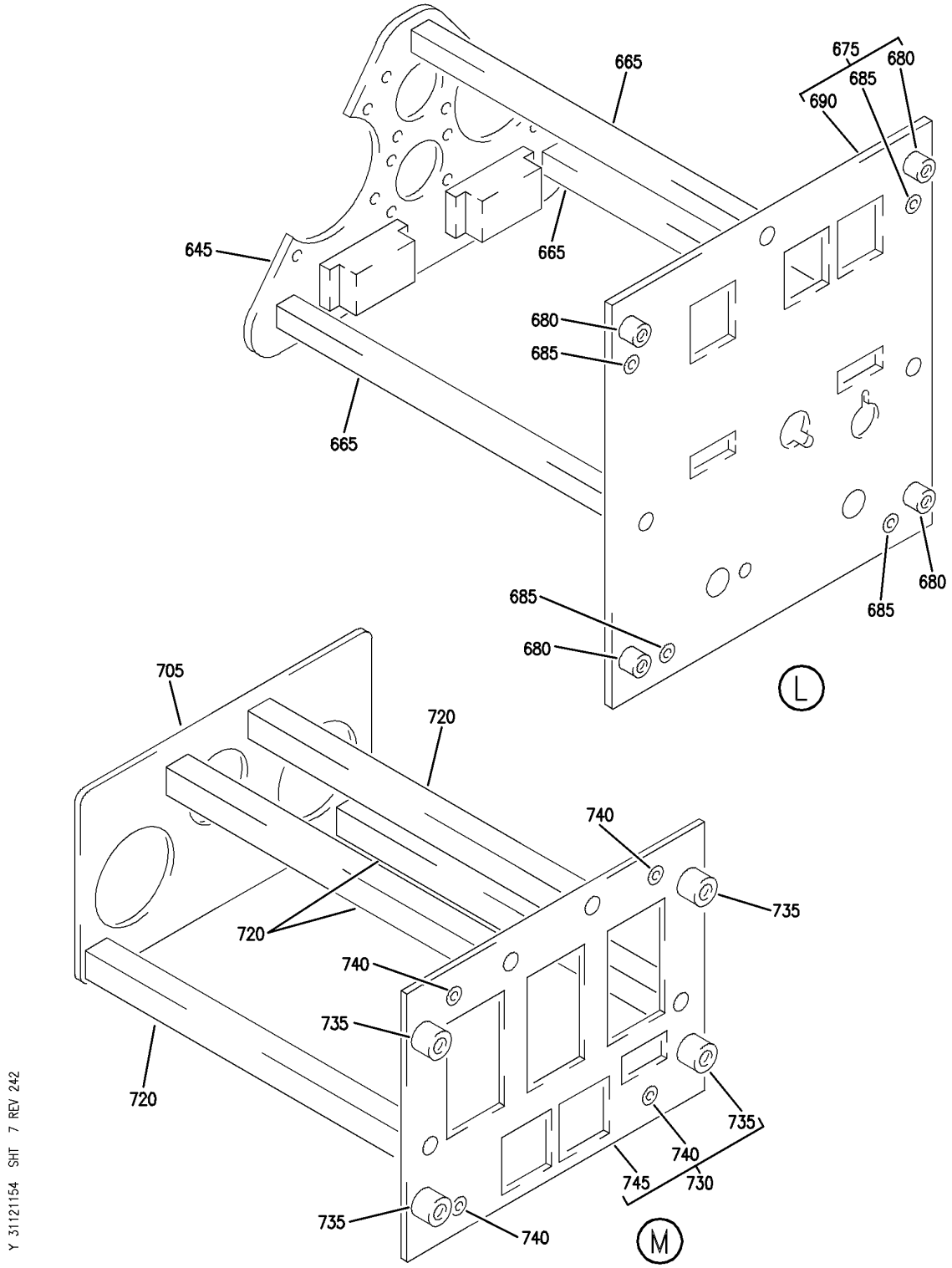

PANEL INSTL-P5 OVHD (INDICATING/RECORDING SYSTEMS ONLY)
FIGURE 54 (SHEET 7)

BOEING PROPRIETARY - Copyright © - Unpublished Work - See title page for details.

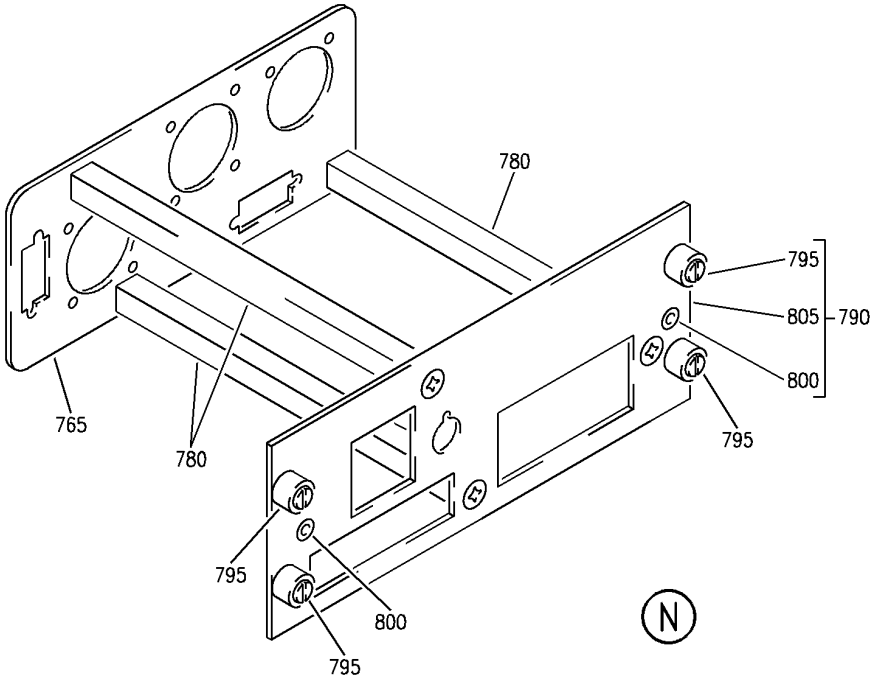

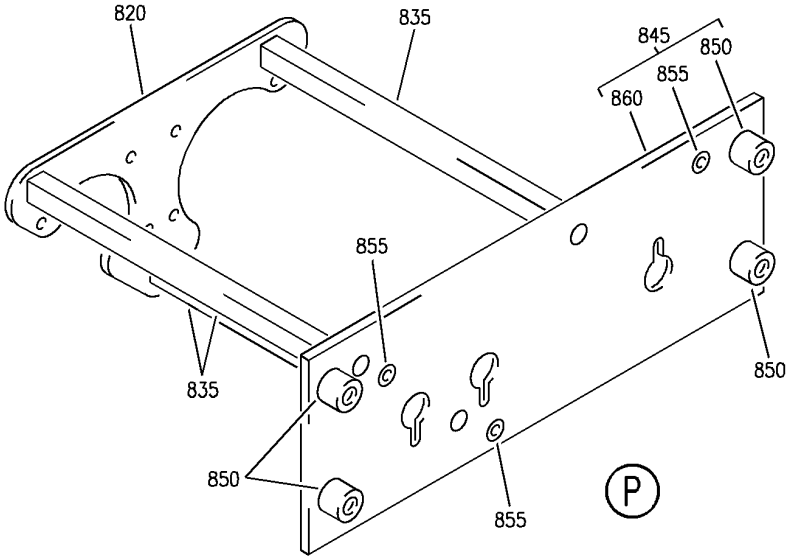

Y 31121154 SHT 8 REV 294

PANEL INSTL-P5 OVHD (INDICATING/RECORDING SYSTEMS ONLY)
FIGURE 54 (SHEET 8)

BOEING PROPRIETARY - Copyright © - Unpublished Work - See title page for details.

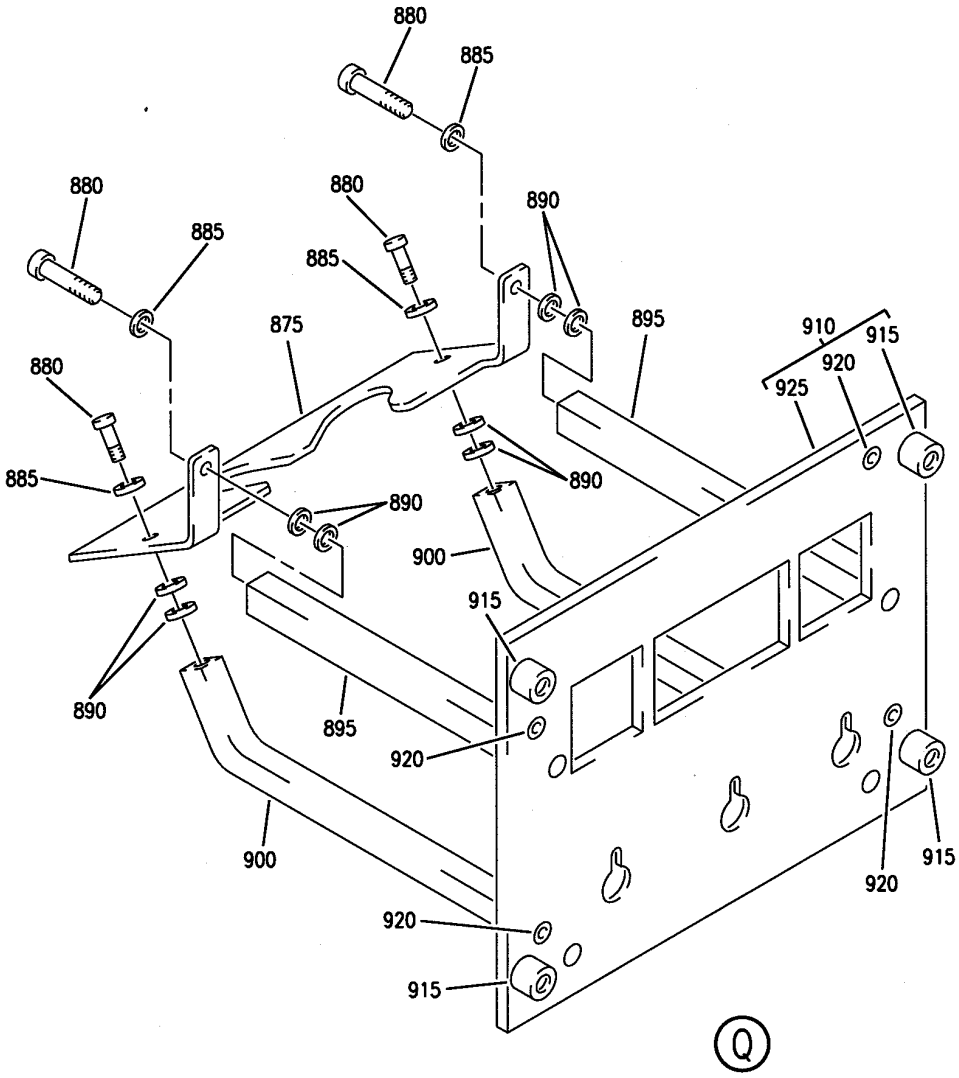

Y 31121154 SHT 9 REV 213

PANEL INSTL-P5 OVHD (INDICATING/RECORDING SYSTEMS ONLY)
FIGURE 54 (SHEET 9)

BOEING PROPRIETARY - Copyright © - Unpublished Work - See title page for details.

FIG ITEM	PART NUMBER	1 2 3 4 5 6 7 NOMENCLATURE	EFFECT FROM TO	UNITS PER ASSY
54				
		PANEL INSTL-P5 OVHD (INDICATING/RECORDING SYSTEMS ONLY)	101102	
- 1	233N3103-132	PANEL INSTL-P5 OVHD (INDICATING/RECORDING SYSTEMS ONLY) FOR NHA/OTHER SYS DET SEE: 25-10-00-15E	101102	RF
5	BACP10U0262T	.PANEL	101102	2
10	CG1093AD01	.PANEL ASSY-IRS MODE SELECT SUPPLIER CODE: V94580 SPECIFICATION NUMBER: S242T101-203 ELECTRICAL EQUIP NUMBER: M00059 COMPONENT MAINT MANUAL REF: 34-21-21 QUALIFIED I/W DATA: CG1093AD01 I/W CG1093AC01 EXCEPT CG1093AD01 DISPLAYS IRU MAINTENANCE CODES AND THE TIME REMAINING IN ALIGNMENT CG1093AD01 I/W CG1093AD02 EXCEPT CG1093AD01 DISPLAYS IRU MAINTENANCE CODES AND THE TIME REMAINING IN ALIGNMENT S242T101-206/CG1093AD03 CAN REPLACE AND BE REPLACED BY S242T101-203/CG1093AD01 EXCEPT FOR NL001-NL999, NU701-NU999 FOR 757, AND VQ001-VQ999 FOR 767, WHERE S242T101-206/CG1093AD03 MUST BE USED. FOR BREAKDOWN SEE: 34-21-02-01	101102	RF

MISSING ITEM NUMBERS NOT APPLICABLE

- ITEM NOT ILLUSTRATED

BOEING PROPRIETARY - Copyright © - Unpublished Work - See title page for details.

FIG ITEM	PART NUMBER	1 2 3 4 5 6 7 NOMENCLATURE	EFFECT FROM TO	UNITS PER ASSY
54				
15	233N3216-306	.PANEL ASSY-YAW DAMPER SUPPLIER CODE: V89954 ELECTRICAL EQUIP NUMBER: M10250 COMPONENT MAINT MANUAL REF: 22-21-71 PRE ALERT SB: 33A0044 FOR OTHER SYS DETAILS SEE: 22-21-01-04 33-13-01-39	101102	1
15	233N3216-309	.PANEL ASSY-YAW DAMPER SUPPLIER CODE: V89954 ELECTRICAL EQUIP NUMBER: M10250 COMPONENT MAINT MANUAL REF: 22-21-71 FOR OTHER SYS DETAILS SEE: 22-21-01-04 33-13-01-39	101102	1
15	233N3216-1306	.PANEL ASSY-YAW DAMPER SUPPLIER CODE: V89954 ELECTRICAL EQUIP NUMBER: M10250 COMPONENT MAINT MANUAL REF: 22-21-71 POST ALERT SB: 33A0044 FOR OTHER SYS DETAILS SEE: 22-21-01-04 33-13-01-39	101102	1
- 20	233N3216-26	..PANEL ASSY- SUPPLIER CODE: V89954 MISCELLANEOUS DATA: FOR SPARES PROCURE NEXT HIGHER ASSY COMPONENT MAINT MANUAL REF: 22-21-71 USED ON: 233N3216-306 PRE ALERT SB: 33A0044	101102	RF

MISSING ITEM NUMBERS NOT APPLICABLE

- ITEM NOT ILLUSTRATED

BOEING PROPRIETARY - Copyright © - Unpublished Work - See title page for details.

FIG ITEM	PART NUMBER	1 2 3 4 5 6 7 NOMENCLATURE	EFFECT FROM TO	UNITS PER ASSY
54				
- 20	233N3216-35	..PANEL ASSY- SUPPLIER CODE: V89954 MISCELLANEOUS DATA: FOR SPARES PROCURE NEXT HIGHER ASSY COMPONENT MAINT MANUAL REF: 22-21-71 USED ON: 233N3216-309	101102	RF
- 20	233N3216-1026	..PANEL ASSY- SUPPLIER CODE: V89954 COMPONENT MAINT MANUAL REF: 22-21-71 USED ON: 233N3216-1306 POST ALERT SB: 33A0044	101102	RF
25	233N3250-15	...BRACKET-CONN. ATTACHING PARTS	101102	1
- 30	BACS12CB06-5	...SCREW- USED ON: 233N3216-26 233N3216-1026	101102	3
- 30	BACS12CK06U5	...SCREW- USED ON: 233N3216-35	101102	3
- 35	MS35338-41	...WASHER- USED ON: 233N3216-26 233N3216-1026	101102	3
- 35	BACW10EC06C	...WASHER- USED ON: 233N3216-35 -------*-------	101102	3
40	69B46200-12	...STANDOFF ATTACHING PARTS	101102	3
- 45	NAS514P632-5	...SCREW- USED ON: 233N3216-26 233N3216-1026	101102	3
- 45	FH6C5CPL12BN	...SCREW- SUPPLIER CODE: V12324 USED ON: 233N3216-35 -------*-------	101102	3

MISSING ITEM NUMBERS NOT APPLICABLE

- ITEM NOT ILLUSTRATED

BOEING PROPRIETARY - Copyright © - Unpublished Work - See title page for details.

FIG ITEM	PART NUMBER	1 2 3 4 5 6 7 NOMENCLATURE	EFFECT FROM TO	UNITS PER ASSY
54				
50	233N3216-2	...BASEPLATE ASSY- SUPPLIER CODE: V89954	101102	1
55	PFSC35-38ASEMB	....STUD ASSY- SUPPLIER CODE: V72794 SPECIFICATION NUMBER: BACS21DX1B	101102	4
60	SF6G6CBB5D	....NUT SUPPLIER CODE: V12324 SPECIFICATION NUMBER: BACN10PA06-6	101102	2
65	233N3216-3	....BASEPLATE- SUPPLIER CODE: V89954	101102	1
70	233T3242-301	.PANEL ASSY-EEC CONT SUPPLIER CODE: V89954 ELECTRICAL EQUIP NUMBER: M10761 COMPONENT MAINT MANUAL REF: 73-21-86 QUALIFIED I/W DATA: 233T3242-301 PANEL ASSY IS I/W 233T3242-6 PANEL ASSY T/W S233T100-1092 LIGHTPLATE PRE ALERT SB: 33A0044 FOR OTHER SYS DETAILS SEE: 33-13-01-39 73-21-52-02	101102	1
70	233T3242-1301	.PANEL ASSY-EEC CONT SUPPLIER CODE: V89954 ELECTRICAL EQUIP NUMBER: M10761 COMPONENT MAINT MANUAL REF: 73-21-86 POST ALERT SB: 33A0044 FOR OTHER SYS DETAILS SEE: 33-13-01-39 73-21-52-02	101102	1

MISSING ITEM NUMBERS NOT APPLICABLE

– ITEM NOT ILLUSTRATED

BOEING PROPRIETARY - Copyright © - Unpublished Work - See title page for details.

FIG ITEM	PART NUMBER	1 2 3 4 5 6 7 NOMENCLATURE	EFFECT FROM TO	UNITS PER ASSY
54				
- 75	233T3242-6	..PANEL ASSY- SUPPLIER CODE: V89954 COMPONENT MAINT MANUAL REF: 73-21-86 QUALIFIED I/W DATA: 233T3242-301 PANEL ASSY IS I/W 233T3242-6 PANEL ASSY T/W S233T100-1092 LIGHTPLATE PRE ALERT SB: 33A0044	101102	RF
- 75	233T3242-1006	..PANEL ASSY- SUPPLIER CODE: V89954 COMPONENT MAINT MANUAL REF: 73-21-86 POST ALERT SB: 33A0044	101102	RF
80	233T6200-142	...BRACKET-SPRT ATTACHING PARTS	101102	1
- 85	BACS12CK06U5	...SCREW-	101102	3
- 90	BACW10EC06C	...WASHER- -------*-------	101102	3
95	69B46200-12	...STANDOFF ATTACHING PARTS	101102	3
- 100	NAS514P632-5P	...SCREW -------*-------	101102	3
105	233T3242-2	...BASEPLATE ASSY- SUPPLIER CODE: V89954	101102	1
110	PFSC35-38ASEMB	....STUD ASSY SUPPLIER CODE: V72794 SPECIFICATION NUMBER: BACS21DX1B	101102	4
115	SF6G6CBB5D	....NUT- SUPPLIER CODE: V12324	101102	2
120	BACP10U0187N	....BASEPLATE	101102	1

MISSING ITEM NUMBERS NOT APPLICABLE

- ITEM NOT ILLUSTRATED

BOEING PROPRIETARY - Copyright © - Unpublished Work - See title page for details.

FIG ITEM	PART NUMBER	1 2 3 4 5 6 7 NOMENCLATURE	EFFECT FROM TO	UNITS PER ASSY
54				
125	233N3205-302	.PANEL ASSY-HYDR SUPPLIER CODE: V89954 ELECTRICAL EQUIP NUMBER: M10050 COMPONENT MAINT MANUAL REF: 29-00-71 QUALIFIED I/W DATA: 233N3205-302 PANEL ASSY IS I/W 233N3205-27 PANEL ASSY T/W S233T100-6060 LIGHTPLATE FOR OTHER SYS DETAILS SEE: 29-11-52-07 29-11-02-03 29-11-05-04 29-31-00-01 29-32-51-03 29-33-52-03 33-13-01-39	101102	1
- 130	233N3205-27	..PANEL ASSY- SUPPLIER CODE: V89954 COMPONENT MAINT MANUAL REF: 29-00-71 QUALIFIED I/W DATA: 233N3205-302 PANEL ASSY IS I/W 233N3205-27 PANEL ASSY T/W S233T100-6060 LIGHTPLATE	101102	RF
135	233N3250-8	...BRACKET ATTACHING PARTS	101102	1
- 140	NAS1801-06-5	...SCREW- OPTIONAL PART: BACS12HN06-5	101102	4
- 140	BACS12HN06-5	...SCREW- OPTIONAL PART: NAS1801-06-5	101102	4
- 145	MS35338-41	...WASHER- OPTIONAL PART: BACW10EC06S	101102	4
- 145	BACW10EC06S	...WASHER- OPTIONAL PART: MS35338-41 -------*-------	101102	4
150	69B46200-11	...STANDOFF ATTACHING PARTS	101102	4
- 155	NAS514P632-5	...SCREW -------*-------	101102	4

MISSING ITEM NUMBERS NOT APPLICABLE

- ITEM NOT ILLUSTRATED

BOEING PROPRIETARY - Copyright © - Unpublished Work - See title page for details.

FIG ITEM	PART NUMBER	1 2 3 4 5 6 7 NOMENCLATURE	EFFECT FROM TO	UNITS PER ASSY
54				
160	233N3205-30	...BASEPLATE ASSY-	101102	1
		SUPPLIER CODE:		
		V89954		
165	SF6G6CBB5D	....NUT	101102	3
		SUPPLIER CODE:		
		V12324		
		SPECIFICATION NUMBER:		
		BACN10PA06-6		
170	BACP10U060OT	....PANEL ASSY	101102	1
175	233T3255-300	.MODULE ASSY-	101102	1
		SUPPLIER CODE:		
		V89954		
		ELECTRICAL EQUIP NUMBER:		
		M06763		
		COMPONENT MAINT MANUAL REF:		
		23-71-01		
		FOR OTHER SYS DETAILS SEE:		
		23-71-05-02		
		33-13-01-39		
- 185	233T3255-1	..MODULE ASSY-	101102	RF
		SUPPLIER CODE:		
		V89954		
		COMPONENT MAINT MANUAL REF:		
		23-71-01		
190	FH6C6CPL12BN	...SCREW-	101102	3
		SUPPLIER CODE:		
		V12324		
195	MS24693C273	...SCREW	101102	1
200	AN960D416	...WASHER	101102	1
205	MS35650-305T	...NUT	101102	1
210	BRH10C3D	...NUT	101102	1
		SUPPLIER CODE:		
		V52828		
		SPECIFICATION NUMBER:		
		BACN10JC3CD		
		OPTIONAL PART:		
		T6C1032JCD		
		V11815		
		NS202486-02		
		V80539		
		102LH9075-3W		
		V72962		
		H51650-3BAC		
		V15653		
215	233T3255-2	...BASEPLATE ASSY-	101102	1
		SUPPLIER CODE:		
		V89954		

MISSING ITEM NUMBERS NOT APPLICABLE

- ITEM NOT ILLUSTRATED

BOEING PROPRIETARY - Copyright © - Unpublished Work - See title page for details.

FIG ITEM	PART NUMBER	1 2 3 4 5 6 7 NOMENCLATURE	EFFECT FROM TO	UNITS PER ASSY
54				
220	PFSC35-38ASEMB	....STUD ASSY SUPPLIER CODE: V72794 SPECIFICATION NUMBER: BACS21DX1B	101102	3
225	SF6G6CBB5D	....NUT- SUPPLIER CODE: V12324	101102	2
230	233T3200-4	....BASEPLATE	101102	1
235	MS51957-27	...SCREW	101102	3
240	MS35338-136	...WASHER	101102	3
245	233T6200-226	...BRACKET-SPRT	101102	1
250	69B46200-9	...STANDOFF	101102	3
300	233N3202-17	.PANEL ASSY-ANN. SUPPLIER CODE: V89954 ELECTRICAL EQUIP NUMBER: M10394 COMPONENT MAINT MANUAL REF: 33-16-71 FOR OTHER SYS DETAILS SEE: 22-24-51-02 27-21-53-02 27-41-55-01 27-61-51-03 27-62-52-02 30-31-51-02 30-32-51-01 30-33-51-02 32-42-52-03 52-71-51-02	101102	1
305	233N3250-7	..BRACKET-CONN. ATTACHING PARTS	101102	1
- 310	BACS12CB06-5	..SCREW	101102	3
- 315	MS35338-41	..WASHER -------*-------	101102	3
320	69B46200-10	..STANDOFF ATTACHING PARTS	101102	3
- 325	NAS514P632-5	..SCREW -------*-------	101102	3
330	233N3202-2	..BASEPLATE ASSY- SUPPLIER CODE: V89954	101102	1
335	BACS21DD1B	...STUD ASSY SUPPLIER CODE: V08524 SPECIFICATION NUMBER: BACS21DD1B	101102	4
340	BACP10U0187T	.PANEL ASSY	101102	1

MISSING ITEM NUMBERS NOT APPLICABLE

- ITEM NOT ILLUSTRATED

BOEING PROPRIETARY - Copyright © - Unpublished Work - See title page for details.

FIG ITEM	PART NUMBER	1 2 3 4 5 6 7 NOMENCLATURE	EFFECT FROM TO	UNITS PER ASSY
54				
345	622-6827-002	.PANEL ASSY-HF CONT (CUSTOMER FURNISHED) SUPPLIER CODE: V4V792 POSITION DATA: L ELECTRICAL EQUIP NUMBER: M00082 COMPONENT MAINT MANUAL REF: 23-10-73 FOR BREAKDOWN SEE: 23-11-02-01	101102	RF
345	622-5432-002	.PANEL ASSY-HF CONT (CUSTOMER FURNISHED) SUPPLIER CODE: V4V792 POSITION DATA: L ELECTRICAL EQUIP NUMBER: M00082 COMPONENT MAINT MANUAL REF: 23-10-71 FOR BREAKDOWN SEE: 23-11-02-01	101102	RF
350	233N3211-308	.PANEL ASSY-BATTERY/STBY PWR SUPPLIER CODE: V89954 ELECTRICAL EQUIP NUMBER: M10062 COMPONENT MAINT MANUAL REF: 24-33-72 QUALIFIED I/W DATA: P/N 233N3211-303 IS FULLY I/W P/N 233N3211-308, EXCEPT ONE-WAY FORWARD FOR U/O 233N3103-121, -122, -21, -22 PRE ALERT SB: 33A0044 FOR OTHER SYS DETAILS SEE: 24-31-01-10 24-31-03-09 24-33-04-01 33-13-01-39	101102	1

MISSING ITEM NUMBERS NOT APPLICABLE

– ITEM NOT ILLUSTRATED

BOEING PROPRIETARY - Copyright © - Unpublished Work - See title page for details.

FIG ITEM	PART NUMBER	1 2 3 4 5 6 7 NOMENCLATURE	EFFECT FROM TO	UNITS PER ASSY
54				
350	233N3211-1308	.PANEL ASSY-BATTERY/STBY PWR SUPPLIER CODE: V89954 ELECTRICAL EQUIP NUMBER: M10062 COMPONENT MAINT MANUAL REF: 24-33-72 POST ALERT SB: 33A0044 FOR OTHER SYS DETAILS SEE: 24-31-01-10 24-31-03-09 24-33-04-01 33-13-01-39	101102	1
350	233N3211-319	.PANEL ASSY-BATTERY/STBY PWR SUPPLIER CODE: V89954 ELECTRICAL EQUIP NUMBER: M10062 COMPONENT MAINT MANUAL REF: 24-33-72 FOR OTHER SYS DETAILS SEE: 24-31-01-10 24-31-03-09 24-33-04-01 33-13-01-39	101102	1
- 355	233N3211-54	..PANEL ASSY- SUPPLIER CODE: V89954 COMPONENT MAINT MANUAL REF: 24-33-72 USED ON: 233N3211-308 PRE ALERT SB: 33A0044	101102	RF
- 355	233N3211-1054	..PANEL ASSY- SUPPLIER CODE: V89954 COMPONENT MAINT MANUAL REF: 24-33-72 POST ALERT SB: 33A0044	101102	RF

MISSING ITEM NUMBERS NOT APPLICABLE

- ITEM NOT ILLUSTRATED

BOEING PROPRIETARY - Copyright © - Unpublished Work - See title page for details.

FIG ITEM	PART NUMBER	1 2 3 4 5 6 7 NOMENCLATURE	EFFECT FROM TO	UNITS PER ASSY
54				
- 355	233N3211-68	..PANEL ASSY- SUPPLIER CODE: V89954 COMPONENT MAINT MANUAL REF: 24-33-72 USED ON: 233N3211-319	101102	RF
360	233N3250-5	...BRACKET ATTACHING PARTS	101102	1
- 365	MS51957-27	...SCREW- USED ON: 233N3211-54	101102	3
- 365	BACS12CK04U5	...SCREW- USED ON: 233N3211-68	101102	3
- 370	MS35338-136	...WASHER- USED ON: 233N3211-54	101102	3
- 370	BACW10EC06C	...WASHER- USED ON: 233N3211-68 -------*-------	101102	3
375	69B46200-17	...STANDOFF ATTACHING PARTS	101102	3
- 380	FH6C5CPL12BN	...SCREW- SUPPLIER CODE: V12324 USED ON: 233N3211-54	101102	3
- 380	NAS514P632-5	...SCREW- USED ON: 233N3211-68 -------*-------	101102	3
385	233N3211-49	...BASEPLATE ASSY- SUPPLIER CODE: V89954	101102	1
390	PFSC35-38ASEMB	....STUD ASSY SUPPLIER CODE: V72794 SPECIFICATION NUMBER: BACS21DX1B	101102	4
395	SF6G6CBB5D	....NUT- SUPPLIER CODE: V12324	101102	2
400	BACP10U0225NC	....PANEL ASSY	101102	1

MISSING ITEM NUMBERS NOT APPLICABLE

- ITEM NOT ILLUSTRATED

BOEING PROPRIETARY - Copyright © - Unpublished Work - See title page for details.

FIG ITEM	PART NUMBER	1 2 3 4 5 6 7 NOMENCLATURE	EFFECT FROM TO	UNITS PER ASSY
54				
405	233N3209-305	.PANEL ASSY-E/E SUPPLIER CODE: V89954 ELECTRICAL EQUIP NUMBER: M10063 COMPONENT MAINT MANUAL REF: 24-22-71 PRE ALERT SB: 33A0044 FOR OTHER SYS DETAILS SEE: 24-11-52-05 24-22-01-03 24-41-51-04 24-51-62-01 33-13-01-39	101102	1
405	233N3209-1305	.PANEL ASSY-E/E SUPPLIER CODE: V89954 ELECTRICAL EQUIP NUMBER: M10063 COMPONENT MAINT MANUAL REF: 24-22-71 POST ALERT SB: 33A0044 FOR OTHER SYS DETAILS SEE: 24-11-52-05 24-22-01-03 24-41-51-04 24-51-62-01 33-13-01-39	101102	1
405	233N3209-314	.PANEL ASSY-E/E SUPPLIER CODE: V89954 ELECTRICAL EQUIP NUMBER: M10063 COMPONENT MAINT MANUAL REF: 24-22-71 FOR OTHER SYS DETAILS SEE: 24-11-52-05 24-22-01-03 24-41-51-04 24-51-62-01 33-13-01-39	101102	1

MISSING ITEM NUMBERS NOT APPLICABLE

– ITEM NOT ILLUSTRATED

BOEING PROPRIETARY - Copyright © - Unpublished Work - See title page for details.

FIG ITEM	PART NUMBER	1 2 3 4 5 6 7 NOMENCLATURE	EFFECT FROM TO	UNITS PER ASSY
54				
- 410	233N3209-41	..PANEL ASSY- SUPPLIER CODE: V89954 MISCELLANEOUS DATA: FOR SPARES PROCURE THE NEXT HIGHER ASSY COMPONENT MAINT MANUAL REF: 24-22-71 USED ON: 233N3209-305 PRE ALERT SB: 33A0044	101102	RF
- 410	233N3209-1041	..PANEL ASSY- SUPPLIER CODE: V89954 COMPONENT MAINT MANUAL REF: 24-22-71 POST ALERT SB: 33A0044	101102	RF
410	233N3209-50	..PANEL ASSY- SUPPLIER CODE: V89954 ELECTRICAL EQUIP NUMBER: M10063 COMPONENT MAINT MANUAL REF: 24-22-71 USED ON: 233N3209-314	101102	RF
415	233N3209-6	...BRACKET ASSY- SUPPLIER CODE: V89954 ATTACHING PARTS	101102	RF
- 420	NAS1801-06-5	...SCREW- USED ON: 233N3209-41 233N3209-1041 -------*-------	101102	4
420	BACS12HN06-5	...SCREW- USED ON: 233N3209-50 ATTACHING PARTS	101102	4
- 425	MS35338-41	...WASHER- USED ON: 233N3209-41 233N3209-1041 -------*-------	101102	4
425	BACW10EC06S	...WASHER- USED ON: 233N3209-50	101102	4

MISSING ITEM NUMBERS NOT APPLICABLE

- ITEM NOT ILLUSTRATED

BOEING PROPRIETARY - Copyright © - Unpublished Work - See title page for details.

FIG ITEM	PART NUMBER	1 2 3 4 5 6 7 NOMENCLATURE	EFFECT FROM TO	UNITS PER ASSY
54				
435	69B46200-12	...STANDOFF ATTACHING PARTS	101102	4
- 440	NAS514P632-5	...SCREW- USED ON: 233N3209-41 233N3209-1041 -------*-------	101102	4
440	FH6C5TPKL12BN	...SCREW- SUPPLIER CODE: V12324 USED ON: 233N3209-50	101102	4
445	233N3209-2	...BASEPLATE ASSY- SUPPLIER CODE: V89954	101102	1
450	SF6G6CBB5D	....NUT SUPPLIER CODE: V12324 SPECIFICATION NUMBER: BACN10PA06-6	101102	4
455	PFSC35-38ASEMB	....STUD ASSY- SUPPLIER CODE: V72794 SPECIFICATION NUMBER: BACS21DX1B	101102	4
460	233N3209-3	....BASEPLATE- SUPPLIER CODE: V89954	101102	1
465	233T3232-300	.PANEL ASSY-APU START SUPPLIER CODE: V89954 MISCELLANEOUS DATA: FOR SPARES PROCURE MAJOR COMPONENTS ELECTRICAL EQUIP NUMBER: M00001 COMPONENT MAINT MANUAL REF: 49-61-52 FOR OTHER SYS DETAILS SEE: 33-13-01-39 49-41-00-02 49-70-00-01	101102	1

MISSING ITEM NUMBERS NOT APPLICABLE

- ITEM NOT ILLUSTRATED

BOEING PROPRIETARY - Copyright © - Unpublished Work - See title page for details.

FIG ITEM	PART NUMBER	1 2 3 4 5 6 7 NOMENCLATURE	EFFECT FROM TO	UNITS PER ASSY
54				
465	233T3232-302	.PANEL ASSY-APU START SUPPLIER CODE: V89954 MISCELLANEOUS DATA: FOR SPARES PROCURE MAJOR COMPONENTS ELECTRICAL EQUIP NUMBER: M00001 COMPONENT MAINT MANUAL REF: 49-61-52 FOR OTHER SYS DETAILS SEE: 33-13-01-39 49-41-00-02 49-70-00-01	101102	1
465	233T3232-305	.PANEL ASSY-APU START SUPPLIER CODE: V89954 ELECTRICAL EQUIP NUMBER: M00001 COMPONENT MAINT MANUAL REF: 49-61-52 FOR OTHER SYS DETAILS SEE: 33-13-01-39 49-41-00-02 49-70-00-01	101102	1
- 470	233T3232-12	..PANEL ASSY- SUPPLIER CODE: V89954 COMPONENT MAINT MANUAL REF: 49-61-52 USED ON: 233T3232-300	101102	RF
- 470	233T3232-15	..PANEL ASSY- SUPPLIER CODE: V89954 COMPONENT MAINT MANUAL REF: 49-61-52 USED ON: 233T3232-302	101102	RF
- 470	233T3232-23	..PANEL ASSY- SUPPLIER CODE: V89954 COMPONENT MAINT MANUAL REF: 49-61-52 USED ON: 233T3232-305	101102	RF
475	233T6200-95	...BRACKET-SPRT	101102	1

MISSING ITEM NUMBERS NOT APPLICABLE

- ITEM NOT ILLUSTRATED

BOEING PROPRIETARY - Copyright © - Unpublished Work - See title page for details.

FIG ITEM	PART NUMBER	1 2 3 4 5 6 7 NOMENCLATURE	EFFECT FROM TO	UNITS PER ASSY
54				
		ATTACHING PARTS		
- 480	NAS1801-06-5	...SCREW-	101102	3
		USED ON:		
		233T3232-12		
		233T3232-15		
- 480	BACS12HN06-5	...SCREW-	101102	3
		USED ON:		
		233T3232-23		
- 485	MS35338-41	...WASHER-	101102	3
		USED ON:		
		233T3232-12		
- 485	BACW10EC06S	...WASHER-	101102	3
		USED ON:		
		233T3232-15		
- 485	BACW10EC06CD	...WASHER-	101102	3
		USED ON:		
		233T3232-23		
		-------*-------		
488	NAS514P632-5	...SCREW-	101102	3
		USED ON:		
		233T3232-12		
488	FH6C5CPL12BN	...SCREW-	101102	3
		SUPPLIER CODE:		
		V12324		
		USED ON:		
		233T3232-15		
		233T3232-23		
490	69B46200-12	...STANDOFF-	101102	3
		USED ON:		
		233T3232-12		
490	69B46200-11	...STANDOFF-	101102	3
		USED ON:		
		233T3232-15		
		233T3232-23		
500	233T3232-2	...BASEPLATE ASSY-	101102	1
		SUPPLIER CODE:		
		V89954		
505	BACS21DD1B	....STUD ASSY	101102	4
		SUPPLIER CODE:		
		V08524		
		SPECIFICATION NUMBER:		
		BACS21DD1B		
510	SF6G6CBB5D	....NUT	101102	2
		SUPPLIER CODE:		
		V12324		
		SPECIFICATION NUMBER:		
		BACN10PA06-6		
515	BACP10U0187N	....BASEPLATE	101102	1

MISSING ITEM NUMBERS NOT APPLICABLE

- ITEM NOT ILLUSTRATED

BOEING PROPRIETARY - Copyright © - Unpublished Work - See title page for details.

FIG ITEM	PART NUMBER	1 2 3 4 5 6 7 NOMENCLATURE	EFFECT FROM TO	UNITS PER ASSY
54				
520	980-6116-002	.PANEL ASSY-VOICE RECORDER SUPPLIER CODE: V97896 ELECTRICAL EQUIP NUMBER: M00050 COMPONENT MAINT MANUAL REF: 23-70-43 FOR BREAKDOWN SEE: 23-71-05-02	101102	RF
525	233N3214-301	.PANEL ASSY-LIGHTING CONT SUPPLIER CODE: V89954 ELECTRICAL EQUIP NUMBER: M10056 COMPONENT MAINT MANUAL REF: 33-11-71 QUALIFIED I/W DATA: THE 233N3214-301 PANEL ASSY IS I/W THE 233N3214-32 PANEL ASSY T/W THE S233T100-6003 LIGHTPLATE AND (2) RC445-131 KNOBS AND (2) TT410-101 KNOBS FOR OTHER SYS DETAILS SEE: 33-11-51-17 33-11-03-03 33-13-01-39 33-42-01-04	101102	1
- 530	233N3214-32	..PANEL ASSY- SUPPLIER CODE: V89954 COMPONENT MAINT MANUAL REF: 33-11-71 QUALIFIED I/W DATA: THE 233N3214-301 PANEL ASSY IS I/W THE 233N3214-32 PANEL ASSY T/W THE S233T100-6003 LIGHTPLATE AND (2) RC445-131 KNOBS AND (2) TT410-101 KNOBS	101102	RF
535	233N3214-16	...BASEPLATE ASSY- SUPPLIER CODE: V89954 ATTACHING PARTS	101102	1
- 540	NAS514P632-5	...SCREW -------*-------	101102	3

MISSING ITEM NUMBERS NOT APPLICABLE

- ITEM NOT ILLUSTRATED

BOEING PROPRIETARY - Copyright © - Unpublished Work - See title page for details.

FIG ITEM	PART NUMBER	1 2 3 4 5 6 7 NOMENCLATURE	EFFECT FROM TO	UNITS PER ASSY
54				
545	PFSC35-38ASEMB	....STUD ASSY-	101102	3
		SUPPLIER CODE:		
		V72794		
		SPECIFICATION NUMBER:		
		BACS21DX1B		
547	SF6G6CBB5D	....NUT	101102	3
		SUPPLIER CODE:		
		V12324		
		SPECIFICATION NUMBER:		
		BACN10PA06-6		
550	233N3214-17	....BASEPLATE-	101102	1
		SUPPLIER CODE:		
		V89954		
555	BACS12HN06-5	...SCREW-	101102	3
560	BACW10EC06S	...WASHER-	101102	3
565	69B46200-14	...STANDOFF	101102	3
570	233N3250-34	...BRACKET	101102	1
575	BACP10U0337T	.PANEL ASSY	101102	1
580	233T3210-300	.PANEL ASSY-EMER LIGHTS	101102	1
		PASS. OXY		
		SUPPLIER CODE:		
		V89954		
		ELECTRICAL EQUIP NUMBER:		
		M00043		
		COMPONENT MAINT MANUAL REF:		
		33-51-03		
		QUALIFIED I/W DATA:		
		THE 233T3210-300 PANEL		
		ASSY IS I/W THE		
		233T3210-28 PANEL ASSY		
		T/W THE S233T100-1077		
		LIGHTPLATE.		
		PRE ALERT SB:		
		33A0044		
		FOR OTHER SYS DETAILS SEE:		
		33-13-01-39		
		33-51-08-05		
		35-21-51-04		

MISSING ITEM NUMBERS NOT APPLICABLE

– ITEM NOT ILLUSTRATED

BOEING PROPRIETARY - Copyright © - Unpublished Work - See title page for details.

FIG ITEM	PART NUMBER	1 2 3 4 5 6 7 NOMENCLATURE	EFFECT FROM TO	UNITS PER ASSY
54				
580	233T3210-306	.PANEL ASSY-EMER LIGHTS PASS. OXY SUPPLIER CODE: V89954 ELECTRICAL EQUIP NUMBER: M00043 COMPONENT MAINT MANUAL REF: 33-51-03 FOR OTHER SYS DETAILS SEE: 33-13-01-39 33-51-08-05 35-21-51-04	101102	1
580	233T3210-1300	.PANEL ASSY-EMER LIGHTS PASS. OXY SUPPLIER CODE: V89954 ELECTRICAL EQUIP NUMBER: M00043 COMPONENT MAINT MANUAL REF: 33-51-03 POST ALERT SB: 33A0044 FOR OTHER SYS DETAILS SEE: 33-13-01-39 33-51-08-05 35-21-51-04	101102	1
- 585	233T3210-28	..PANEL ASSY- SUPPLIER CODE: V89954 COMPONENT MAINT MANUAL REF: 33-51-03 QUALIFIED I/W DATA: THE 233T3210-300 PANEL ASSY IS I/W THE 233T3210-28 PANEL ASSY T/W THE S233T100-1077 LIGHTPLATE. 233T3210-305 CAN REPLACE OR BE REPLACED BY 233T3210-28 T/W S233T100-1077 SUBJECT TO CUSTOMER PREFERENCE OF HAVING OR NOT HAVING SWITCH GUARD USED ON: 233T3210-300 PRE ALERT SB: 33A0044	101102	RF

MISSING ITEM NUMBERS NOT APPLICABLE

- ITEM NOT ILLUSTRATED

BOEING PROPRIETARY - Copyright © - Unpublished Work - See title page for details.

FIG ITEM	PART NUMBER	1 2 3 4 5 6 7 NOMENCLATURE	EFFECT FROM TO	UNITS PER ASSY
54				
- 585	233T3210-42	..PANEL ASSY- SUPPLIER CODE: V89954 USED ON: 233T3210-306	101102	RF
- 585	233T3210-1028	..PANEL ASSY- SUPPLIER CODE: V89954 COMPONENT MAINT MANUAL REF: 33-51-03 USED ON: 233T3210-1300 POST ALERT SB: 33A0044	101102	RF
590	233T6200-82	...BRACKET ATTACHING PARTS	101102	1
- 595	NAS1801-06-5	...SCREW- USED ON: 233T3210-28	101102	3
- 595	BACS12CK06U5	...SCREW- USED ON: 233T3210-42	101102	3
- 600	MS35338-41	...WASHER- USED ON: 233T3210-28	101102	3
- 600	BACW10EC06C	...WASHER- USED ON: 233T3210-42 -------*-------	101102	3
605	69B46200-10	...STANDOFF ATTACHING PARTS	101102	3
- 610	NAS514P632-5	...SCREW- USED ON: 233T3210-28	101102	3
- 610	FH6C5CPL12BN	...SCREW- SUPPLIER CODE: V12324 USED ON: 233T3210-42 -------*-------	101102	3
615	233T3210-17	...BASEPLATE ASSY- SUPPLIER CODE: V89954	101102	1
620	BACS21DD1B	....STUD ASSY SUPPLIER CODE: V08524 SPECIFICATION NUMBER: BACS21DD1B	101102	4

MISSING ITEM NUMBERS NOT APPLICABLE

- ITEM NOT ILLUSTRATED

BOEING PROPRIETARY - Copyright © - Unpublished Work - See title page for details.

FIG ITEM	PART NUMBER	1 2 3 4 5 6 7 NOMENCLATURE	EFFECT FROM TO	UNITS PER ASSY
54				
625	SF6G6CBB5D	....NUT	101102	2
		SUPPLIER CODE:		
		V12324		
		SPECIFICATION NUMBER:		
		BACN10PA06-6		
630	BACP10U0225N	....PANEL	101102	1
635	233N3223-301	.PANEL ASSY-ENG START/RAT	101102	1
		SUPPLIER CODE:		
		V89954		
		ELECTRICAL EQUIP NUMBER:		
		M10468		
		COMPONENT MAINT MANUAL REF:		
		31-12-01		
		QUALIFIED I/W DATA:		
		THE 233N3223-301 PANEL		
		ASSY IS I/W THE		
		233N3223-40 PANEL ASSY		
		T/W THE S233T100-6046		
		LIGHTPLATE AND (3)		
		BP248-127 KNOBS.		
		PRE ALERT SB:		
		33A0044		
		FOR OTHER SYS DETAILS SEE:		
		29-21-54-03		
		33-13-01-39		
		73-21-52-02		
		74-31-51-05		
		80-11-09-02		

MISSING ITEM NUMBERS NOT APPLICABLE

— ITEM NOT ILLUSTRATED

BOEING PROPRIETARY - Copyright © - Unpublished Work - See title page for details.

FIG ITEM	PART NUMBER	1 2 3 4 5 6 7 NOMENCLATURE	EFFECT FROM TO	UNITS PER ASSY
54				
635	233N3223-300	.PANEL ASSY-ENG START/RAT SUPPLIER CODE: V89954 ELECTRICAL EQUIP NUMBER: M10468 COMPONENT MAINT MANUAL REF: 31-12-01 QUALIFIED I/W DATA: THE 233N3223-300 PANEL ASSY IS I/W THE 233N3223-39 PANEL ASSY T/W THE S233T100-6046 LIGHTPLATE AND (3) BP248-127 KNOBS. PRE ALERT SB: 33A0044 FOR OTHER SYS DETAILS SEE: 29-21-54-03 33-13-01-39 73-21-52-02 74-31-51-05 80-11-09-02	101102	1
635	233N3223-343	.PANEL ASSY-ENG START/RAT SUPPLIER CODE: V89954 ELECTRICAL EQUIP NUMBER: M10468 FOR OTHER SYS DETAILS SEE: 29-21-54-02 33-13-01-39 73-21-52-02 74-31-51-05 80-11-09-02	101102	1

MISSING ITEM NUMBERS NOT APPLICABLE

– ITEM NOT ILLUSTRATED

BOEING PROPRIETARY - Copyright © - Unpublished Work - See title page for details.

FIG ITEM	PART NUMBER	1 2 3 4 5 6 7 NOMENCLATURE	EFFECT FROM TO	UNITS PER ASSY
54				
635	233N3223-1301	.PANEL ASSY-ENG START/RAT SUPPLIER CODE: V89954 ELECTRICAL EQUIP NUMBER: M10468 COMPONENT MAINT MANUAL REF: 31-12-01 OPTIONAL PART: 233N3223-1300 V89954 POST ALERT SB: 33A0044 FOR OTHER SYS DETAILS SEE: 29-21-54-03 33-13-01-39 73-21-52-02 74-31-51-05 80-11-09-02	101102	1
635	233N3223-1300	.PANEL ASSY-ENG START/RAT SUPPLIER CODE: V89954 ELECTRICAL EQUIP NUMBER: M10468 COMPONENT MAINT MANUAL REF: 31-12-01 OPTIONAL PART: 233N3223-1301 V89954 POST ALERT SB: 33A0044 FOR OTHER SYS DETAILS SEE: 29-21-54-03 33-13-01-39 73-21-52-02 74-31-51-05 80-11-09-02	101102	1

MISSING ITEM NUMBERS NOT APPLICABLE

– ITEM NOT ILLUSTRATED

BOEING PROPRIETARY - Copyright © - Unpublished Work - See title page for details.

FIG ITEM	PART NUMBER	1 2 3 4 5 6 7 NOMENCLATURE	EFFECT FROM TO	UNITS PER ASSY
54				
- 640	233N3223-39	..PANEL ASSY- SUPPLIER CODE: V89954 MISCELLANEOUS DATA: FOR SPARES PROCURE NEXT HIGHER ASSY COMPONENT MAINT MANUAL REF: 31-12-01 QUALIFIED I/W DATA: THE 233N3223-300 PANEL ASSY IS I/W THE 233N3223-39 PANEL ASSY T/W THE S233T100-6046 LIGHTPLATE AND (3) BP248-127 KNOBS. USED ON: 233N3223-300 PRE ALERT SB: 33A0044	101102	RF
- 640	233N3223-40	..PANEL ASSY- SUPPLIER CODE: V89954 MISCELLANEOUS DATA: FOR SPARES PROCURE NEXT HIGHER ASSY COMPONENT MAINT MANUAL REF: 31-12-01 QUALIFIED I/W DATA: THE 233N3223-301 PANEL ASSY IS I/W THE 233N3223-40 PANEL ASSY T/W THE S233T100-6046 LIGHTPLATE AND (3) BP248-127 KNOBS. USED ON: 233N3223-301 PRE ALERT SB: 33A0044	101102	RF
- 640	233N3223-53	..PANEL ASSY- SUPPLIER CODE: V89954 MISCELLANEOUS DATA: FOR SPARES PROCURE NEXT HIGHER ASSY COMPONENT MAINT MANUAL REF: 31-12-01 USED ON: 233N3223-343	101102	RF

MISSING ITEM NUMBERS NOT APPLICABLE

- ITEM NOT ILLUSTRATED

BOEING PROPRIETARY - Copyright © - Unpublished Work - See title page for details.

FIG ITEM	PART NUMBER	1 2 3 4 5 6 7 NOMENCLATURE	EFFECT FROM TO	UNITS PER ASSY
54				
- 640	233N3223-1039	..PANEL ASSY- SUPPLIER CODE: V89954 COMPONENT MAINT MANUAL REF: 31-12-01 USED ON: 233N3223-1300 POST ALERT SB: 33A0044	101102	RF
- 640	233N3223-1040	..PANEL ASSY- SUPPLIER CODE: V89954 COMPONENT MAINT MANUAL REF: 31-12-01 USED ON: 233N3223-1301 POST ALERT SB: 33A0044	101102	RF
645	233N3223-35	...BRACKET ASSY- SUPPLIER CODE: V89954 ATTACHING PARTS	101102	RF
- 650	NAS1801-06-5	...SCREW- USED ON: 233N3223-39 233N3223-40 233N3223-1039 233N3223-1040	101102	3
- 650	BACS12HN06-5	...SCREW- OPTIONAL PART: NAS1801-06-5 USED ON: 233N3223-53	101102	3
- 650	NAS1801-06-5	...SCREW- OPTIONAL PART: BACS12HN06-5 USED ON: 233N3223-53	101102	3
- 655	MS35338-41	...WASHER- USED ON: 233N3223-39 233N3223-40 233N3223-1039 233N3223-1040	101102	3
- 655	BACW10EC06CD	...WASHER- USED ON: 233N3223-53 -------*-------	101102	3
665	69B46200-13	...STANDOFF	101102	3

MISSING ITEM NUMBERS NOT APPLICABLE

- ITEM NOT ILLUSTRATED

BOEING PROPRIETARY - Copyright © - Unpublished Work - See title page for details.

FIG ITEM	PART NUMBER	1 2 3 4 5 6 7 NOMENCLATURE	EFFECT FROM TO	UNITS PER ASSY
54				
		ATTACHING PARTS		
- 670	NAS514P632-5	...SCREW	101102	3
		-------*-------		
675	233N3223-8	...BASEPLATE ASSY-	101102	1
		SUPPLIER CODE:		
		V89954		
680	PFSC35-38ASEMB	....STUD ASSY-	101102	4
		SUPPLIER CODE:		
		V72794		
		SPECIFICATION NUMBER:		
		BACS21DX1B		
685	SF6G6CBB5D	....NUT	101102	4
		SUPPLIER CODE:		
		V12324		
		SPECIFICATION NUMBER:		
		BACN10PA06-6		
690	233N3223-9	....BASEPLATE-	101102	1
		SUPPLIER CODE:		
		V89954		
695	233N3206-300	.PANEL ASSY-FUEL CONT	101102	1
		SUPPLIER CODE:		
		V89954		
		ELECTRICAL EQUIP NUMBER:		
		M10055		
		COMPONENT MAINT MANUAL REF:		
		28-41-71		
		QUALIFIED I/W DATA:		
		THE 233N3206-300 PANEL		
		ASSY IS I/W THE		
		233N3206-19 PANEL ASSY		
		T/W THE S233T100-1106		
		LIGHTPLATE		
		PRE ALERT SB:		
		28A0105R1		
		PRE COMPONENT SB:		
		233N3206-28-03		
		FOR OTHER SYS DETAILS SEE:		
		28-22-51-02		
		28-41-51-03		
		33-13-01-39		

MISSING ITEM NUMBERS NOT APPLICABLE

- ITEM NOT ILLUSTRATED

BOEING PROPRIETARY - Copyright © - Unpublished Work - See title page for details.

FIG ITEM	PART NUMBER	1 2 3 4 5 6 7 NOMENCLATURE	EFFECT FROM TO	UNITS PER ASSY
54				
695	233N3206-3300	.PANEL ASSY-FUEL CONT SUPPLIER CODE: V89954 ELECTRICAL EQUIP NUMBER: M10055 COMPONENT MAINT MANUAL REF: 28-41-71 POST ALERT SB: 28A0105R1 POST COMPONENT SB: 233N3206-28-03 FOR OTHER SYS DETAILS SEE: 28-22-51-02 28-41-51-03 33-13-01-39	101102	1
- 700	233N3206-19	..PANEL ASSY- SUPPLIER CODE: V89954 COMPONENT MAINT MANUAL REF: 28-41-71 QUALIFIED I/W DATA: THE 233N3206-300 PANEL ASSY IS I/W THE 233N3206-19 PANEL ASSY T/W THE S233T100-1106 LIGHTPLATE PRE ALERT SB: 28A0105R1 PRE COMPONENT SB: 233N3206-28-03	101102	RF
- 700	233N3206-3019	..PANEL ASSY- SUPPLIER CODE: V89954 COMPONENT MAINT MANUAL REF: 28-41-71 POST ALERT SB: 28A0105R1 POST COMPONENT SB: 233N3206-28-03	101102	RF
705	233N3250-64	...BRACKET ATTACHING PARTS	101102	1
- 710	BACS12HN06-5	...SCREW-	101102	4
- 715	BACW10EC06S	...WASHER- -------*-------	101102	4
720	69B46200-11	...STANDOFF ATTACHING PARTS	101102	4
- 725	NAS514P632-5	...SCREW -------*-------	101102	4

MISSING ITEM NUMBERS NOT APPLICABLE

- ITEM NOT ILLUSTRATED

BOEING PROPRIETARY - Copyright © - Unpublished Work - See title page for details.

FIG ITEM	PART NUMBER	1 2 3 4 5 6 7 NOMENCLATURE	EFFECT FROM TO	UNITS PER ASSY
54				
730	233T3235-18	...BASEPLATE ASSY- SUPPLIER CODE: V89954	101102	1
735	PFSC35-38ASEMB	....STUD ASSY SUPPLIER CODE: V72794 SPECIFICATION NUMBER: BACS21DX1B	101102	4
740	SF6G6CBB5D	....NUT- SUPPLIER CODE: V12324	101102	4
745	BACP10U0412N	....BASEPLATE	101102	1
750	10080-0101	.INDICATOR ASSY-INTEGRATED FUEL QTY SUPPLIER CODE: V89305 SPECIFICATION NUMBER: S345N001-001 ELECTRICAL EQUIP NUMBER: M10054 COMPONENT MAINT MANUAL REF: 28-42-08 OPTIONAL PART: 10080-0201 V89305 FOR BREAKDOWN SEE: 28-41-04-01	101102	RF
750	10080-0201	.INDICATOR ASSY-INTEGRATED FUEL QTY SUPPLIER CODE: V89305 FUNCTIONAL DESCRIPTION: MODULE DISPLAYS INDIVIDUAL TANK QUANTITY, TOTAL QUANTITY & TEMPERATURE OF MAIN TANK SPECIFICATION NUMBER: S345N001-001 ELECTRICAL EQUIP NUMBER: M10054 COMPONENT MAINT MANUAL REF: 28-42-08 OPTIONAL PART: 10080-0101 V89305 FOR BREAKDOWN SEE: 28-41-04-01	101102	RF

MISSING ITEM NUMBERS NOT APPLICABLE

– ITEM NOT ILLUSTRATED

BOEING PROPRIETARY - Copyright © - Unpublished Work - See title page for details.

FIG ITEM	PART NUMBER	1 2 3 4 5 6 7 NOMENCLATURE	EFFECT FROM TO	UNITS PER ASSY
54				
755	233N3204-300	.PANEL ASSY-ANTI-ICE SUPPLIER CODE: V89954 ELECTRICAL EQUIP NUMBER: M10397 COMPONENT MAINT MANUAL REF: 30-11-72 QUALIFIED I/W DATA: 233N3204-300 PANEL ASSY IS I/W 233N3204-19 PANEL ASSY T/W S233T100-1070 LIGHTPLATE OPTIONAL PART: 233N3204-301 V89954 PRE ALERT SB: 33A0044 FOR OTHER SYS DETAILS SEE: 30-11-51-03 30-21-51-03 33-13-01-39	101102	1
755	233N3204-301	.PANEL ASSY-ANTI-ICE SUPPLIER CODE: V89954 ELECTRICAL EQUIP NUMBER: M10397 COMPONENT MAINT MANUAL REF: 30-11-72 QUALIFIED I/W DATA: 233N3204-301 PANEL ASSY IS I/W 233N3204-20 PANEL ASSY T/W S233T100-1070 LIGHTPLATE OPTIONAL PART: 233N3204-300 V89954 PRE ALERT SB: 33A0044 FOR OTHER SYS DETAILS SEE: 30-11-51-03 30-21-51-03 33-13-01-39	101102	1

MISSING ITEM NUMBERS NOT APPLICABLE

– ITEM NOT ILLUSTRATED

BOEING PROPRIETARY - Copyright © - Unpublished Work - See title page for details.

FIG ITEM	PART NUMBER	1 2 3 4 5 6 7 NOMENCLATURE	EFFECT FROM TO	UNITS PER ASSY
54				
755	233N3204-1300	.PANEL ASSY-ANTI-ICE SUPPLIER CODE: V89954 ELECTRICAL EQUIP NUMBER: M10397 COMPONENT MAINT MANUAL REF: 30-11-72 OPTIONAL PART: 233N3204-301 V89954 POST ALERT SB: 33A0044 FOR OTHER SYS DETAILS SEE: 30-11-51-03 30-21-51-03 33-13-01-39	101102	1
755	233N3204-1301	.PANEL ASSY-ANTI-ICE SUPPLIER CODE: V89954 ELECTRICAL EQUIP NUMBER: M10397 COMPONENT MAINT MANUAL REF: 30-11-72 POST ALERT SB: 33A0044 FOR OTHER SYS DETAILS SEE: 30-11-51-03 30-21-51-03 33-13-01-39	101102	1
755	233N3204-332	.PANEL ASSY-ANTI-ICE SUPPLIER CODE: V89954 ELECTRICAL EQUIP NUMBER: M10397 COMPONENT MAINT MANUAL REF: 30-11-72 FOR OTHER SYS DETAILS SEE: 30-11-51-03 30-21-51-03 33-13-01-39	101102	1

MISSING ITEM NUMBERS NOT APPLICABLE

– ITEM NOT ILLUSTRATED

BOEING PROPRIETARY - Copyright © - Unpublished Work - See title page for details.

FIG ITEM	PART NUMBER	1 2 3 4 5 6 7 NOMENCLATURE	EFFECT FROM TO	UNITS PER ASSY
54				
- 760	233N3204-19	..PANEL ASSY- SUPPLIER CODE: V89954 ELECTRICAL EQUIP NUMBER: M10397 COMPONENT MAINT MANUAL REF: 30-11-72 QUALIFIED I/W DATA: 233N3204-300 PANEL ASSY IS I/W 233N3204-19 PANEL ASSY T/W S233T100-1070 LIGHTPLATE USED ON: 233N3204-300 PRE ALERT SB: 33A0044	101102	RF
- 760	233N3204-20	..PANEL ASSY- SUPPLIER CODE: V89954 COMPONENT MAINT MANUAL REF: 30-11-72 QUALIFIED I/W DATA: 233N3204-301 PANEL ASSY IS I/W 233N3204-20 PANEL ASSY T/W S233T100-1070 LIGHTPLATE USED ON: 233N3204-301 PRE ALERT SB: 33A0044	101102	RF
- 760	233N3204-1019	..PANEL ASSY- SUPPLIER CODE: V89954 ELECTRICAL EQUIP NUMBER: M10397 COMPONENT MAINT MANUAL REF: 30-11-72 USED ON: 233N3204-1300 POST ALERT SB: 33A0044	101102	RF

MISSING ITEM NUMBERS NOT APPLICABLE

- ITEM NOT ILLUSTRATED

BOEING PROPRIETARY - Copyright © - Unpublished Work - See title page for details.

FIG ITEM	PART NUMBER	1 2 3 4 5 6 7 NOMENCLATURE	EFFECT FROM TO	UNITS PER ASSY
54				
- 760	233N3204-1020	..PANEL ASSY- SUPPLIER CODE: V89954 COMPONENT MAINT MANUAL REF: 30-11-72 USED ON: 233N3204-1301 POST ALERT SB: 33A0044	101102	RF
- 760	233N3204-36	..PANEL ASSY- SUPPLIER CODE: V89954 COMPONENT MAINT MANUAL REF: 30-11-72 USED ON: 233N3204-332	101102	RF
765	233N3250-56	...BRACKET ATTACHING PARTS	101102	1
- 770	NAS1801-06-5	...SCREW- USED ON: 233N3204-19 233N3204-20 233N3204-1019 233N3204-1020	101102	3
- 770	BACS12HN06-5	...SCREW- USED ON: 233N3204-36	101102	3
- 775	MS35338-41	...WASHER- USED ON: 233N3204-19 233N3204-20 233N3204-1019 233N3204-1020	101102	3
- 775	BACW10EC06S	...WASHER- USED ON: 233N3204-36 -------*-------	101102	3
780	69B46200-11	...STANDOFF ATTACHING PARTS	101102	3
- 785	NAS514P632-5	...SCREW -------*-------	101102	3
790	233N3204-7	...BASEPLATE ASSY- SUPPLIER CODE: V89954	101102	1
795	PFSC35-38ASEMB	....STUD ASSY- SUPPLIER CODE: V72794 SPECIFICATION NUMBER: BACS21DX1B	101102	4

MISSING ITEM NUMBERS NOT APPLICABLE

- ITEM NOT ILLUSTRATED

BOEING PROPRIETARY - Copyright © - Unpublished Work - See title page for details.

FIG ITEM	PART NUMBER	1 2 3 4 5 6 7 NOMENCLATURE	EFFECT FROM TO	UNITS PER ASSY
54				
800	SF6G6CBB5D	....NUT SUPPLIER CODE: V12324 SPECIFICATION NUMBER: BACN10PA06-6	101102	2
805	233N3204-8	....BASEPLATE- SUPPLIER CODE: V89954	101102	1
810	233N3201-303	.PANEL ASSY-RAIN REPELLENT AND WIPER SUPPLIER CODE: V89954 ELECTRICAL EQUIP NUMBER: M10023 COMPONENT MAINT MANUAL REF: 30-42-01 FOR OTHER SYS DETAILS SEE: 30-42-51-03 33-13-01-39	101102	1
- 815	233N3201-16	..PANEL ASSY- SUPPLIER CODE: V89954 COMPONENT MAINT MANUAL REF: 30-42-01	101102	RF
820	233N3250-6	...BRACKET-CONN. ATTACHING PARTS	101102	1
- 825	BACS12CB06-5	...SCREW	101102	3
- 830	MS35338-41	...WASHER -------*-------	101102	3
835	69B46200-5	...STANDOFF ATTACHING PARTS	101102	3
- 840	NAS514P632-5	...SCREW -------*-------	101102	3
845	233N3201-8	...BASEPLATE ASSY- SUPPLIER CODE: V89954	101102	1
850	BACS21DD1B	....STUD ASSY SUPPLIER CODE: V08524 SPECIFICATION NUMBER: BACS21DD1B	101102	4
855	SF6G6CBB5D	....NUT SUPPLIER CODE: V12324 SPECIFICATION NUMBER: BACN10PA06-6	101102	3
860	BACP10U0262N	....BASEPLATE	101102	1

MISSING ITEM NUMBERS NOT APPLICABLE

- ITEM NOT ILLUSTRATED

BOEING PROPRIETARY - Copyright © - Unpublished Work - See title page for details.

FIG ITEM	PART NUMBER	1 2 3 4 5 6 7 NOMENCLATURE	EFFECT FROM TO	UNITS PER ASSY
54				
865	233T3217-300	.PANEL ASSY-ANTI-COLLISION AND LDG SUPPLIER CODE: V89954 ELECTRICAL EQUIP NUMBER: M00056 COMPONENT MAINT MANUAL REF: 33-44-72 QUALIFIED I/W DATA: THE 233T3217-300 PANEL ASSY IS I/W THE 233T3217-41 PANEL ASSY T/W THE S233T100-6030 LIGHTPLATE. FOR OTHER SYS DETAILS SEE: 33-13-01-39 33-41-52-04 33-42-52-04 33-43-51-04 33-44-51-05	101102	1
- 870	233T3217-41	..PANEL ASSY- SUPPLIER CODE: V89954 COMPONENT MAINT MANUAL REF: 33-44-72 QUALIFIED I/W DATA: THE 233T3217-300 PANEL ASSY IS I/W THE 233T3217-41 PANEL ASSY T/W THE S233T100-6030 LIGHTPLATE.	101102	RF
875	233T6200-70	...BRACKET ATTACHING PARTS	101102	1
880	BACS12HN06-6	...SCREW- OPTIONAL PART: NAS1801-06-6	101102	4
880	NAS1801-06-6	...SCREW- OPTIONAL PART: BACS12HN06-6	101102	4
885	BACW10EC06CD	...WASHER- OPTIONAL PART: BACW10EC06S	101102	4
885	BACW10EC06S	...WASHER- OPTIONAL PART: BACW10EC06CD	101102	4
890	NAS620-6	...WASHER- POSITION DATA: FARSIDE -------*-------	101102	8

MISSING ITEM NUMBERS NOT APPLICABLE

- ITEM NOT ILLUSTRATED

BOEING PROPRIETARY - Copyright © - Unpublished Work - See title page for details.

FIG ITEM	PART NUMBER	1 2 3 4 5 6 7 NOMENCLATURE	EFFECT FROM TO	UNITS PER ASSY
54				
895	69B46200-5	...STANDOFF	101102	2
900	233T6200-66	...STANDOFF	101102	2
		ATTACHING PARTS		
- 905	NAS514P632-5	...SCREW	101102	4
		-------*-------		
910	233N3210-7	...BASEPLATE ASSY-	101102	1
		SUPPLIER CODE:		
		V89954		
915	BACS21DD1B	....STUD ASSY	101102	4
		SUPPLIER CODE:		
		V08524		
		SPECIFICATION NUMBER:		
		BACS21DD1B		
920	SF6G6CBB5D	....NUT	101102	4
		SUPPLIER CODE:		
		V12324		
		SPECIFICATION NUMBER:		
		BACN10PA06-6		
925	233N3210-8	....BASEPLATE-	101102	1
		SUPPLIER CODE:		
		V89954		

MISSING ITEM NUMBERS NOT APPLICABLE

- ITEM NOT ILLUSTRATED

BOEING PROPRIETARY - Copyright © - Unpublished Work - See title page for details.

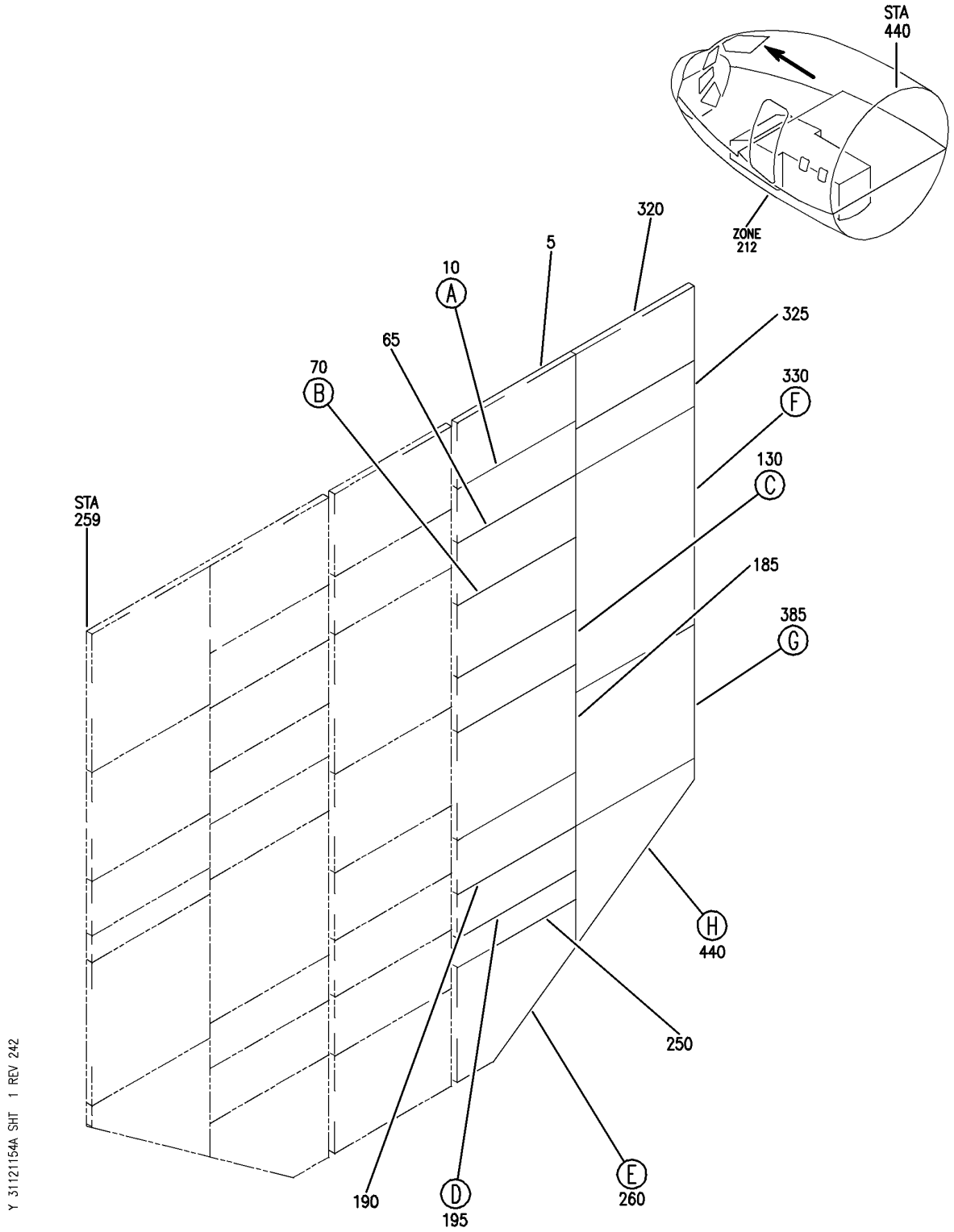

PANEL INSTL-P5 OVHD (INDICATING/RECORDING SYSTEMS ONLY)
FIGURE 54A (SHEET 1)

BOEING PROPRIETARY - Copyright © - Unpublished Work - See title page for details.

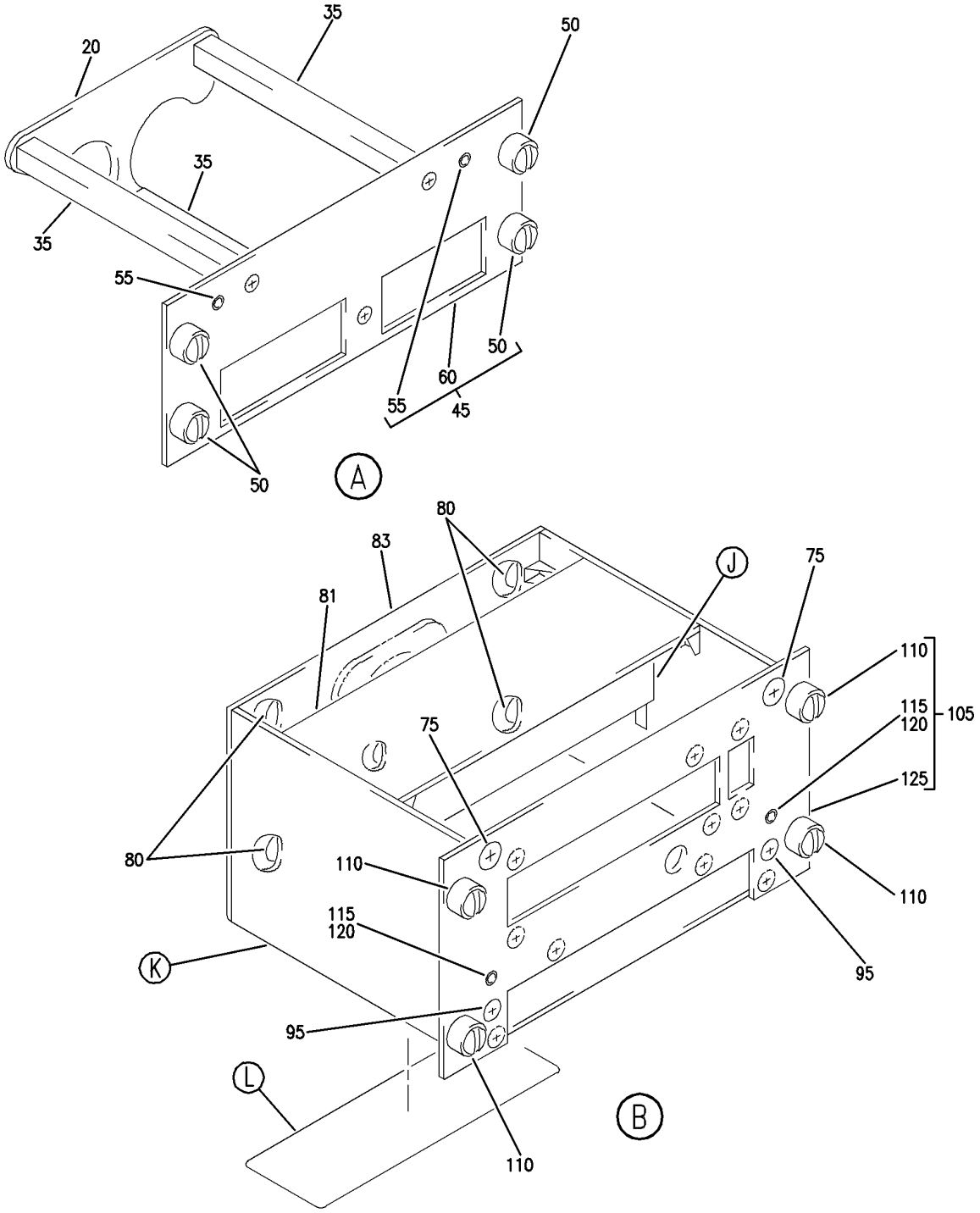

PANEL INSTL-P5 OVHD (INDICATING/RECORDING SYSTEMS ONLY)
FIGURE 54A (SHEET 2)

BOEING PROPRIETARY - Copyright © - Unpublished Work - See title page for details.

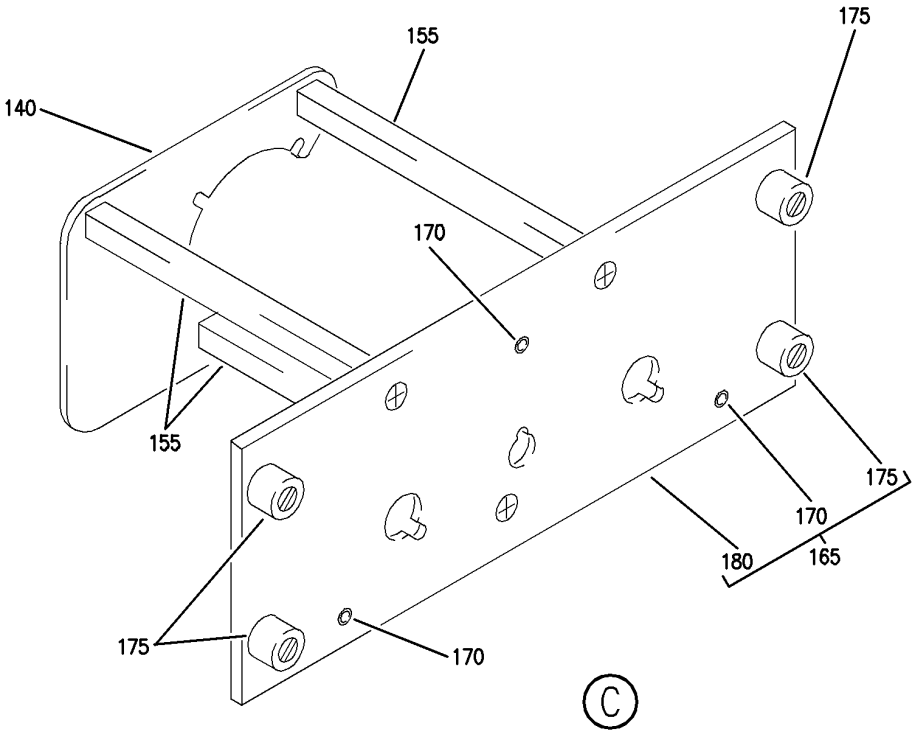

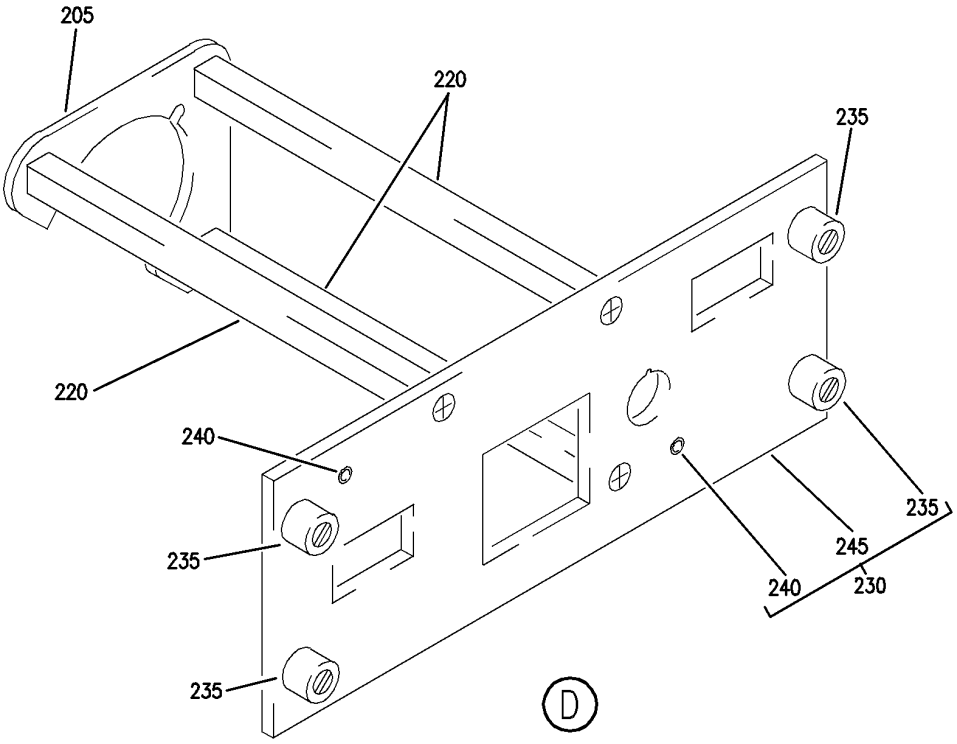

Y 31121154A SHT 3 REV 245

PANEL INSTL-P5 OVHD (INDICATING/RECORDING SYSTEMS ONLY)
FIGURE 54A (SHEET 3)

BOEING PROPRIETARY - Copyright © - Unpublished Work - See title page for details.

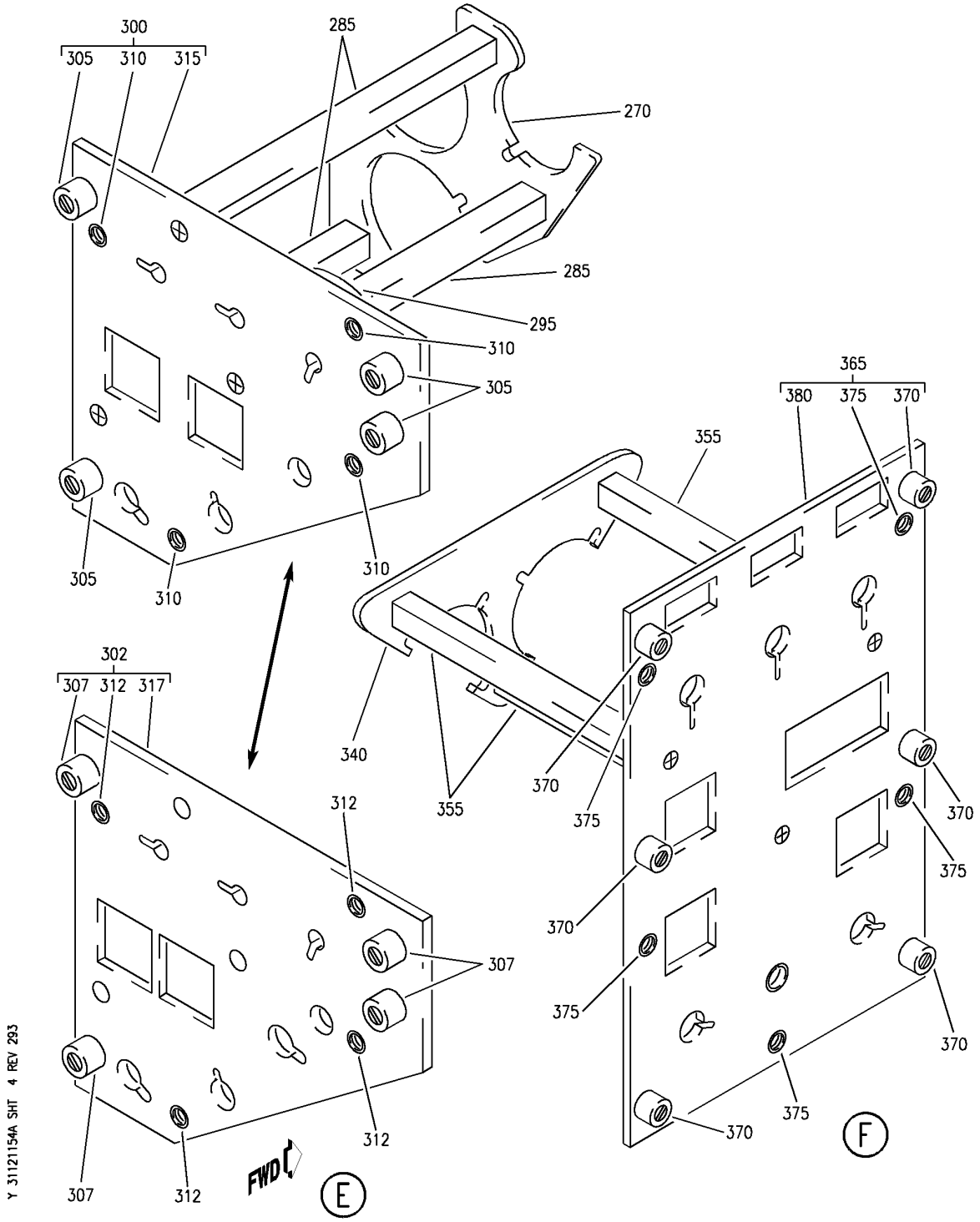

PANEL INSTL-P5 OVHD (INDICATING/RECORDING SYSTEMS ONLY)
FIGURE 54A (SHEET 4)

BOEING PROPRIETARY - Copyright © - Unpublished Work - See title page for details.

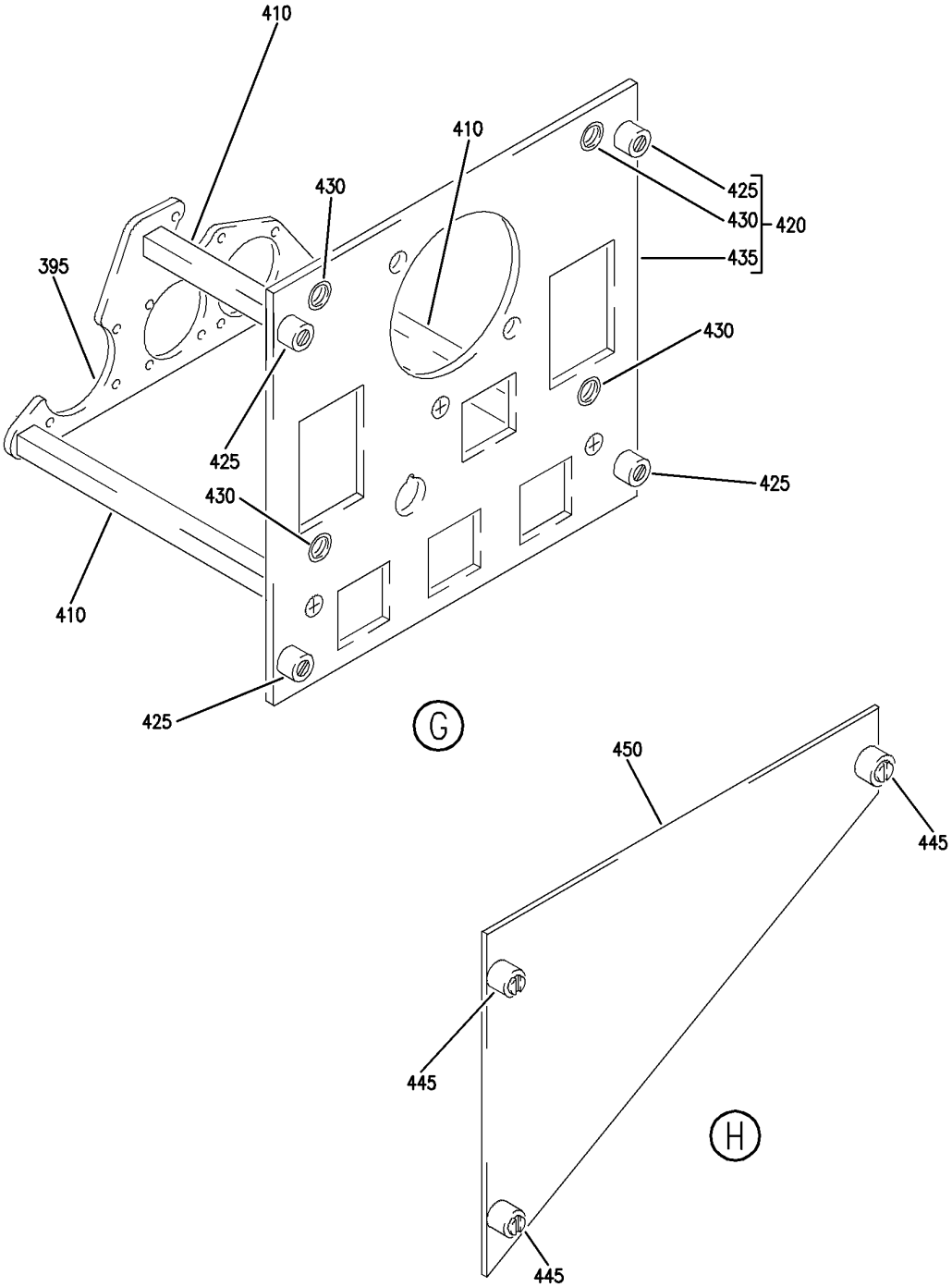

Y 31121154A SHT 5 REV 245

PANEL INSTL-P5 OVHD (INDICATING/RECORDING SYSTEMS ONLY)
FIGURE 54A (SHEET 5)

BOEING PROPRIETARY - Copyright © - Unpublished Work - See title page for details.

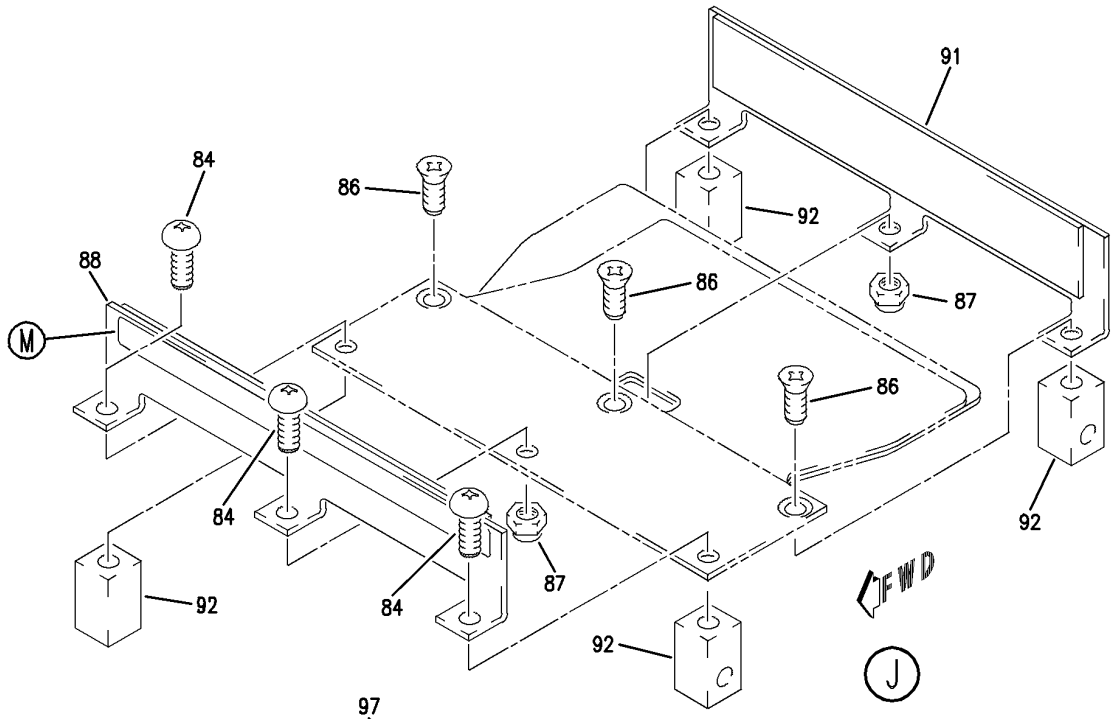

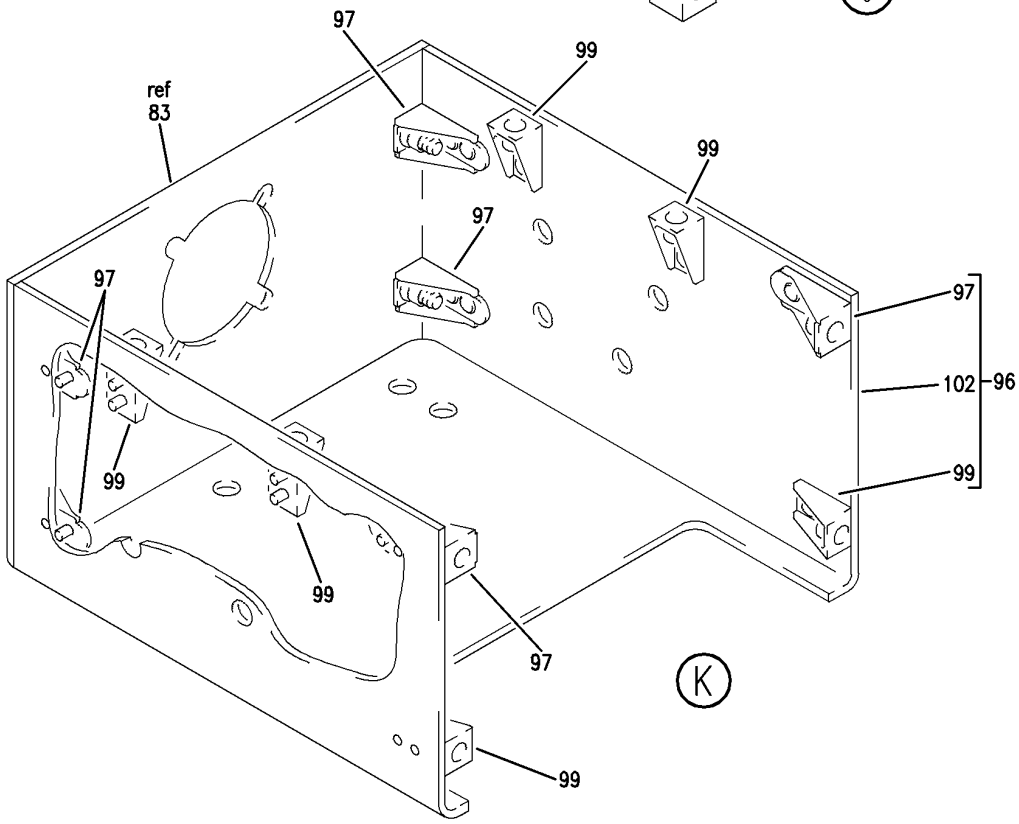

Y 31121154A SHT 6 REV 242

PANEL INSTL-P5 OVHD (INDICATING/RECORDING SYSTEMS ONLY)
FIGURE 54A (SHEET 6)

BOEING PROPRIETARY - Copyright © - Unpublished Work - See title page for details.

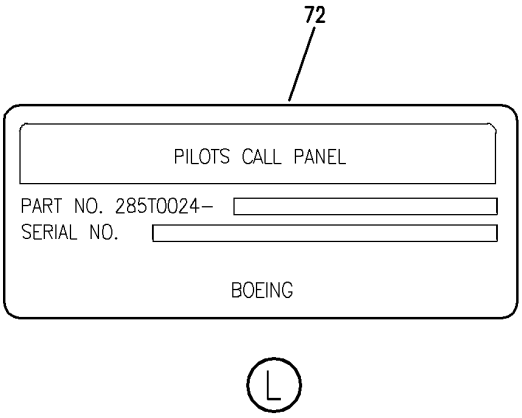

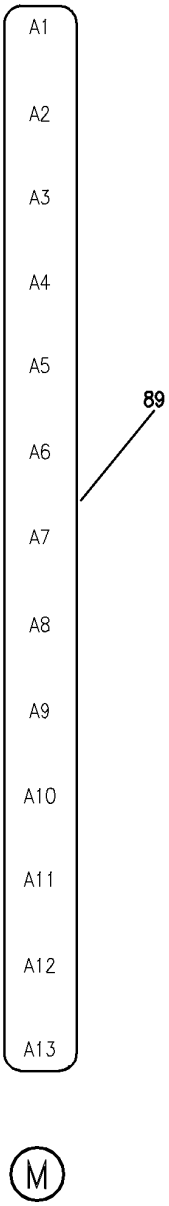

Y 31121154A SHT 7 REV 242

PANEL INSTL-P5 OVHD (INDICATING/RECORDING SYSTEMS ONLY)
FIGURE 54A (SHEET 7)

BOEING PROPRIETARY - Copyright © - Unpublished Work - See title page for details.

FIG ITEM	PART NUMBER	1 2 3 4 5 6 7 NOMENCLATURE	EFFECT FROM TO	UNITS PER ASSY
54A				
		PANEL INSTL-P5 OVHD (INDICATING/RECORDING SYSTEMS ONLY)	101102	
- 1	233N3103-132	PANEL INSTL-P5 OVHD (INDICATING/RECORDING SYSTEMS ONLY) FOR NHA/OTHER SYS DET SEE: 25-10-00-15E	101102	RF
5	BACP10U0262T	.PANEL	101102	1
10	233N3212-300	.PANEL ASSY-WINDOW HEAT SUPPLIER CODE: V89954 ELECTRICAL EQUIP NUMBER: M00056 COMPONENT MAINT MANUAL REF: 30-41-71 QUALIFIED I/W DATA: THE 233N3212-300 PANEL ASSY IS I/W THE 233N3212-11 PANEL ASSY T/W THE S233T100-1073 LIGHTPLATE OPTIONAL PART: 233N3212-302 V89954 FOR OTHER SYS DETAILS SEE: 30-41-51-03 33-13-01-39	101102	1
10	233N3212-302	.PANEL ASSY-WINDOW HEAT SUPPLIER CODE: V89954 ELECTRICAL EQUIP NUMBER: M00056 COMPONENT MAINT MANUAL REF: 30-41-71 OPTIONAL PART: 233N3212-300 V89954 FOR OTHER SYS DETAILS SEE: 30-41-51-03 33-13-01-39	101102	1

MISSING ITEM NUMBERS NOT APPLICABLE

- ITEM NOT ILLUSTRATED

BOEING PROPRIETARY - Copyright © - Unpublished Work - See title page for details.

FIG ITEM	PART NUMBER	1 2 3 4 5 6 7 NOMENCLATURE	EFFECT FROM TO	UNITS PER ASSY
54A				
- 15	233N3212-11	..PANEL ASSY- SUPPLIER CODE: V89954 COMPONENT MAINT MANUAL REF: 30-41-71 QUALIFIED I/W DATA: THE 233N3212-300 PANEL ASSY IS I/W THE 233N3212-11 PANEL ASSY T/W THE S233T100-1073 LIGHTPLATE USED ON: 233N3212-300	101102	RF
- 15	233N3212-14	..PANEL ASSY- SUPPLIER CODE: V89954 COMPONENT MAINT MANUAL REF: 30-41-71 USED ON: 233N3212-302	101102	RF
20	233N3250-11	...BRACKET ATTACHING PARTS	101102	1
- 25	NAS1801-06-5	...SCREW- USED ON: 233N3212-11	101102	3
- 25	BACS12HN06-5	...SCREW- OPTIONAL PART: NAS1801-06-5 USED ON: 233N3212-14	101102	3
- 25	NAS1801-06-5	...SCREW- OPTIONAL PART: BACS12HN06-5 USED ON: 233N3212-14	101102	3
- 30	MS35338-41	...WASHER- USED ON: 233N3212-11	101102	3
- 30	BACW10EC06S	...WASHER- USED ON: 233N3212-14 -------*-------	101102	3
35	69B46200-12	...STANDOFF ATTACHING PARTS	101102	3
- 40	NAS514P632-5	...SCREW -------*-------	101102	3
45	233N3212-2	...BASEPLATE ASSY- SUPPLIER CODE: V89954	101102	1

MISSING ITEM NUMBERS NOT APPLICABLE

- ITEM NOT ILLUSTRATED

BOEING PROPRIETARY - Copyright © - Unpublished Work - See title page for details.

	FIG ITEM	PART NUMBER	1 2 3 4 5 6 7 NOMENCLATURE	EFFECT FROM TO	UNITS PER ASSY
	54A				
	50	PFSC35-38ASEMB	....STUD ASSY- SUPPLIER CODE: V72794 SPECIFICATION NUMBER: BACS21DX1B	101102	4
	55	SF6G6CBB5D	....NUT SUPPLIER CODE: V12324 SPECIFICATION NUMBER: BACN10PA06-6	101102	2
	60	233N3212-3	....BASEPLATE- SUPPLIER CODE: V89954	101102	1
R	65	622-6827-002	.PANEL ASSY-HF CONT SUPPLIER CODE: V4V792 POSITION DATA: L ELECTRICAL EQUIP NUMBER: M00083 COMPONENT MAINT MANUAL REF: 23-10-73 FOR BREAKDOWN SEE: 23-11-02-01	101102	RF
R	65	622-5432-002	.PANEL ASSY-HF CONT SUPPLIER CODE: V4V792 POSITION DATA: L ELECTRICAL EQUIP NUMBER: M00083 COMPONENT MAINT MANUAL REF: 23-10-71 FOR BREAKDOWN SEE: 23-11-02-01	101102	RF
	70	285T0024-47	.MODULE ASSY-PILOTS CALL PNL SUPPLIER CODE: V89954 ELECTRICAL EQUIP NUMBER: M00051 COMPONENT MAINT MANUAL REF: 23-42-62 FOR OTHER SYS DETAILS SEE: 23-42-02-09 33-13-01-39	101102	1
	72	BAC27TEX0933	..MARKER-ALUMINUM FOIL SUPPLIER CODE: V89954	101102	1

MISSING ITEM NUMBERS NOT APPLICABLE

– ITEM NOT ILLUSTRATED

BOEING PROPRIETARY - Copyright © - Unpublished Work - See title page for details.

FIG ITEM	PART NUMBER	1 2 3 4 5 6 7 NOMENCLATURE	EFFECT FROM TO	UNITS PER ASSY
54A				
75	NAS514P632-5	..SCREW	101102	2
80	NAS1801-06-5	..SCREW	101102	4
81	285T0158-29	..COVER ASSY-	101102	1
		SUPPLIER CODE:		
		V89954		
		ATTACHING PARTS		
- 82	NAS514P440-5	..SCREW	101102	4
		-------*-------		
83	285T0158-7	..PANEL-	101102	1
		SUPPLIER CODE:		
		V89954		
84	MS35214-13	..SCREW	101102	3
86	NAS514P440-5	..SCREW	101102	3
87	92-1660-40	..NUT	101102	2
		SUPPLIER CODE:		
		V72962		
		SPECIFICATION NUMBER:		
		BACN10DN40		
		OPTIONAL PART:		
		92-1660-440		
		V15653		
88	285T0158-25	..BRACKET ASSY-	101102	1
		SUPPLIER CODE:		
		V89954		
89	BAC27TEX1986	...DECAL-	101102	1
		SUPPLIER CODE:		
		V89954		
91	285T0158-27	..BRACKET ASSY-	101102	1
		SUPPLIER CODE:		
		V89954		
92	285T0158-21	..BLOCK-MTG	101102	4
		SUPPLIER CODE:		
		V89954		
		ATTACHING PARTS		
- 93	NAS514P440-5	..SCREW	101102	4
		-------*-------		
95	NAS514P440-5	..SCREW	101102	2
96	285T0158-23	..BRACKET ASSY-	101102	1
		SUPPLIER CODE:		
		V89954		
97	MF6000-06	...NUTPLATE	101102	6
		SUPPLIER CODE:		
		V15653		
		SPECIFICATION NUMBER:		
		BACN10KJ06		
		ATTACHING PARTS		
- 98	BACR15BA3AD	...RIVET-	101102	12
		SIZE DETERMINED ON INSTL.		
		-------*-------		

MISSING ITEM NUMBERS NOT APPLICABLE

- ITEM NOT ILLUSTRATED

BOEING PROPRIETARY - Copyright © - Unpublished Work - See title page for details.

FIG ITEM	PART NUMBER	1 2 3 4 5 6 7 NOMENCLATURE	EFFECT FROM TO	UNITS PER ASSY
54A				
99	F22A27M22-40	...NUT- SUPPLIER CODE: V0217B ATTACHING PARTS	101102	6
- 101	BACR15BA2AD	...RIVET- SIZE DETERMINED ON INSTL. -------*-------	101102	12
102	285T0158-22	...BRACKET- SUPPLIER CODE: V89954	101102	1
105	285T0157-49	..PANEL ASSY- SUPPLIER CODE: V89954	101102	1
110	PFSC35-38ASEMB	...STUD ASSY SUPPLIER CODE: V72794 SPECIFICATION NUMBER: BACS21DX1B	101102	4
115	SF6G6CBB5D	...NUT- SUPPLIER CODE: V12324 SPECIFICATION NUMBER: BACN10PA06-6 OPTIONAL PART: SF6G6CBB5D V12324	101102	2
120	SF6G6CBB5D	...NUT- SUPPLIER CODE: V12324 OPTIONAL PART: BACN10PA06-6	101102	2
125	285T0157-50	...PANEL- SUPPLIER CODE: V89954	101102	1
130	233T3216-300	.PANEL ASSY-PASS. SIGN CONT SUPPLIER CODE: V89954 ELECTRICAL EQUIP NUMBER: M00052 COMPONENT MAINT MANUAL REF: 33-24-02 FOR OTHER SYS DETAILS SEE: 33-13-01-39 33-24-51-02	101102	1
- 135	233T3216-10	..PANEL ASSY- SUPPLIER CODE: V89954 COMPONENT MAINT MANUAL REF: 33-24-02	101102	RF

MISSING ITEM NUMBERS NOT APPLICABLE

- ITEM NOT ILLUSTRATED

BOEING PROPRIETARY - Copyright © - Unpublished Work - See title page for details.

FIG ITEM	PART NUMBER	1 2 3 4 5 6 7 NOMENCLATURE	EFFECT FROM TO	UNITS PER ASSY
54A				
140	233T6200-85	...BRACKET-SPRT ATTACHING PARTS	101102	1
- 145	NAS1801-06-5	...SCREW	101102	3
- 150	MS35338-41	...WASHER -------*-------	101102	3
155	69B46200-9	...STANDOFF ATTACHING PARTS	101102	3
- 160	NAS514P632-5	...SCREW -------*-------	101102	3
165	233T3216-2	...BASEPLATE ASSY- SUPPLIER CODE: V89954	101102	1
170	SF6G6CBB5D	....NUT SUPPLIER CODE: V12324 SPECIFICATION NUMBER: BACN10PA06-6	101102	3
175	BACS21DD1B	....STUD ASSY SUPPLIER CODE: V08524 SPECIFICATION NUMBER: BACS21DD1B	101102	4
180	233T3216-3	....BASEPLATE- SUPPLIER CODE: V89954	101102	1
185	130502-7	.PANEL ASSY-CAB. ALTITUDE CONT SUPPLIER CODE: V64547 FUNCTIONAL DESCRIPTION: SELECTOR CONTAINS CONTROLS AND CIRCUITRY NECESSARY FOR AUTOMATIC OR MANUAL PRESSURE SELECTION SPECIFICATION NUMBER: S210T160-72 ELECTRICAL EQUIP NUMBER: M00013 COMPONENT MAINT MANUAL REF: 21-31-50 FOR BREAKDOWN SEE: 21-31-01-02	101102	RF

MISSING ITEM NUMBERS NOT APPLICABLE

– ITEM NOT ILLUSTRATED

BOEING PROPRIETARY - Copyright © - Unpublished Work - See title page for details.

FIG ITEM	PART NUMBER	1 2 3 4 5 6 7 NOMENCLATURE	EFFECT FROM TO	UNITS PER ASSY
54A				
185	130502-6	.PANEL ASSY-CAB. ALTITUDE SUPPLIER CODE: V64547 SPECIFICATION NUMBER: S210T160-62 ELECTRICAL EQUIP NUMBER: M00013 COMPONENT MAINT MANUAL REF: 21-31-50 FOR BREAKDOWN SEE: 21-31-01-02	101102	RF
185	130502-5	.PANEL ASSY-CAB. ALTITUDE SUPPLIER CODE: V64547 SPECIFICATION NUMBER: S210T160-52 ELECTRICAL EQUIP NUMBER: M00013 COMPONENT MAINT MANUAL REF: 21-31-50 FOR BREAKDOWN SEE: 21-31-01-02	101102	RF
185	130502-4	.PANEL ASSY-CAB. ALTITUDE SUPPLIER CODE: V64547 SPECIFICATION NUMBER: S210T160-42 ELECTRICAL EQUIP NUMBER: M00013 COMPONENT MAINT MANUAL REF: 21-31-50 FOR BREAKDOWN SEE: 21-31-01-02	101102	RF

MISSING ITEM NUMBERS NOT APPLICABLE

– ITEM NOT ILLUSTRATED

BOEING PROPRIETARY - Copyright © - Unpublished Work - See title page for details.

FIG ITEM	PART NUMBER	1 2 3 4 5 6 7 NOMENCLATURE	EFFECT FROM TO	UNITS PER ASSY
54A				
190	SETL0C420M	.PANEL ASSY-CAB. PRESSURE GAUGES SUPPLIER CODE: V61349 FUNCTIONAL DESCRIPTION: PROVIDES CABIN PRESSURE RATE OF CLIMB OR DESCENT CABIN TO AMBIENT DIFFERENTIAL PRESSURE AND CABIN ALTITUDE SPECIFICATION NUMBER: S231N210-14 MISCELLANEOUS DATA: PT033D SENSOR TOGETHER WITH SETL0C420M OR SETL0C420L PANEL MAY REPLACE PT033A SENSOR TOGETHER WITH SETL0C420H PANEL ELECTRICAL EQUIP NUMBER: M00019 COMPONENT MAINT MANUAL REF: 21-33-07 FOR BREAKDOWN SEE: 21-33-51-03	101102	RF
195	233N3203-300	.PANEL ASSY-EQPT COOLING SUPPLIER CODE: V89954 ELECTRICAL EQUIP NUMBER: M10067 COMPONENT MAINT MANUAL REF: 21-58-71 QUALIFIED I/W DATA: 233N3203-300 PANEL ASSY IS I/W 233N3203-32 PANEL ASSY T/W S233T100-6045 LIGHTPLATE PRE ALERT SB: 33A0044 FOR OTHER SYS DETAILS SEE: 21-33-51-03 21-58-19-10 21-58-51-03 33-13-01-39	101102	1

MISSING ITEM NUMBERS NOT APPLICABLE

— ITEM NOT ILLUSTRATED

BOEING PROPRIETARY - Copyright © - Unpublished Work - See title page for details.

FIG ITEM	PART NUMBER	1 2 3 4 5 6 7 NOMENCLATURE	EFFECT FROM TO	UNITS PER ASSY
54A				
195	233N3203-1300	.PANEL ASSY-EQPT COOLING SUPPLIER CODE: V89954 ELECTRICAL EQUIP NUMBER: M10067 COMPONENT MAINT MANUAL REF: 21-58-71 POST ALERT SB: 33A0044 FOR OTHER SYS DETAILS SEE: 21-33-51-03 21-58-19-10 21-58-51-03 33-13-01-39	101102	1
195	233N3203-337	.PANEL ASSY-EQPT COOLING SUPPLIER CODE: V89954 ELECTRICAL EQUIP NUMBER: M10067 COMPONENT MAINT MANUAL REF: 21-58-71 FOR OTHER SYS DETAILS SEE: 21-33-51-03 21-58-19-10 21-58-51-03 33-13-01-39	101102	1
- 200	233N3203-32	..PANEL ASSY- SUPPLIER CODE: V89954 COMPONENT MAINT MANUAL REF: 21-58-71 QUALIFIED I/W DATA: 233N3203-300 PANEL ASSY IS I/W 233N3203-32 PANEL ASSY T/W S233T100-6045 LIGHTPLATE USED ON: 233N3203-300 PRE ALERT SB: 33A0044	101102	RF
- 200	233N3203-1032	..PANEL ASSY- SUPPLIER CODE: V89954 COMPONENT MAINT MANUAL REF: 21-58-71 USED ON: 233N3203-1300 POST ALERT SB: 33A0044	101102	RF

MISSING ITEM NUMBERS NOT APPLICABLE

– ITEM NOT ILLUSTRATED

BOEING PROPRIETARY - Copyright © - Unpublished Work - See title page for details.

FIG ITEM	PART NUMBER	1 2 3 4 5 6 7 NOMENCLATURE	EFFECT FROM TO	UNITS PER ASSY
54A				
- 200	233N3203-37	..PANEL ASSY- SUPPLIER CODE: V89954 COMPONENT MAINT MANUAL REF: 21-58-71 USED ON: 233N3203-337	101102	RF
205	233N3250-10	...BRACKET ATTACHING PARTS	101102	1
- 210	NAS1801-06-5	...SCREW- OPTIONAL PART: BACS12HN06-5 USED ON: 233N3203-32 233N3203-1032	101102	3
- 210	BACS12HN06-5	...SCREW- OPTIONAL PART: NAS1801-06-5 USED ON: 233N3203-32 233N3203-1032	101102	3
- 210	BACS12HN06-5	...SCREW- USED ON: 233N3203-37	101102	3
- 215	BACW10EC06S	...WASHER- -------*-------	101102	3
220	69B46200-11	...STANDOFF ATTACHING PARTS	101102	3
- 225	NAS514P632-6	...SCREW -------*-------	101102	3
230	233N3203-19	...BASEPLATE ASSY- SUPPLIER CODE: V89954	101102	1
235	PFSC35-38ASEMB	....STUD ASSY- SUPPLIER CODE: V72794 SPECIFICATION NUMBER: BACS21DX1B	101102	4
240	SF6G6CBB5D	....NUT SUPPLIER CODE: V12324 SPECIFICATION NUMBER: BACN10PA06-6	101102	2
245	233N3203-21	....BASEPLATE- SUPPLIER CODE: V89954	101102	1
250	BACP10U0112T	.PANEL ASSY	101102	1

MISSING ITEM NUMBERS NOT APPLICABLE

- ITEM NOT ILLUSTRATED

BOEING PROPRIETARY - Copyright © - Unpublished Work - See title page for details.

FIG ITEM	PART NUMBER	1 2 3 4 5 6 7 NOMENCLATURE	EFFECT FROM TO	UNITS PER ASSY
54A				
260	233N3221-302	.PANEL ASSY-LIGHTING CONT SUPPLIER CODE: V89954 POSITION DATA: R ELECTRICAL EQUIP NUMBER: M10057 COMPONENT MAINT MANUAL REF: 33-11-72 QUALIFIED I/W DATA: 233N3221-302 PANEL ASSY IS I/W 233N3221-61 PANEL ASSY T/W S233T100-6039 LIGHTPLATE AND (3) RD241-119 KNOBS AND (1) BP248-127 KNOB FOR OTHER SYS DETAILS SEE: 33-11-51-17 33-13-01-39 33-13-02-03 33-16-51-03 33-45-53-03 52-51-51-03	101102	1
260	233N3221-326	.PANEL ASSY-LIGHTING CONT SUPPLIER CODE: V89954 POSITION DATA: R ELECTRICAL EQUIP NUMBER: M10057 COMPONENT MAINT MANUAL REF: 33-11-72 FOR OTHER SYS DETAILS SEE: 33-11-51-17 33-13-01-39 33-13-02-03 33-16-51-03 33-45-53-03 52-51-51-03	101102	1

MISSING ITEM NUMBERS NOT APPLICABLE

– ITEM NOT ILLUSTRATED

BOEING PROPRIETARY - Copyright © - Unpublished Work - See title page for details.

FIG ITEM	PART NUMBER	1 2 3 4 5 6 7 NOMENCLATURE	EFFECT FROM TO	UNITS PER ASSY
54A				
- 265	233N3221-61	..PANEL ASSY- SUPPLIER CODE: V89954 COMPONENT MAINT MANUAL REF: 33-11-72 QUALIFIED I/W DATA: 233N3221-302 PANEL ASSY IS I/W 233N3221-61 PANEL ASSY T/W S233T100-6039 LIGHTPLATE AND (3) RD241-119 KNOBS AND (1) BP248-127 KNOB USED ON: 233N3221-302	101102	RF
- 265	233N3221-110	..PANEL ASSY- SUPPLIER CODE: V89954 COMPONENT MAINT MANUAL REF: 33-11-72 USED ON: 233N3221-326	101102	RF
270	233N3250-48	...BRACKET ATTACHING PARTS	101102	1
- 275	BACS12HN06-5	...SCREW-	101102	3
- 280	BACW10EC06S	...WASHER- USED ON: 233N3221-61 -------*-------	101102	3
280	BACW10EC06CD	...WASHER- USED ON: 233N3221-110	101102	3
285	69B46200-10	...STANDOFF-SPRT ATTACHING PARTS	101102	3
- 290	NAS514P632-5	...SCREW- USED ON: 233N3221-61	101102	3
- 290	FH6C5CPL12BN	...SCREW- SUPPLIER CODE: V12324 OPTIONAL PART: NAS514P632-6 USED ON: 233N3221-110	101102	3

MISSING ITEM NUMBERS NOT APPLICABLE

- ITEM NOT ILLUSTRATED

BOEING PROPRIETARY - Copyright © - Unpublished Work - See title page for details.

FIG ITEM	PART NUMBER	1 2 3 4 5 6 7 NOMENCLATURE	EFFECT FROM TO	UNITS PER ASSY
54A				
- 290	NAS514P632-6	...SCREW- OPTIONAL PART: FH6C5CPL12BN V12324 USED ON: 233N3221-110 -------*-------	101102	3
295	65B40112-12	...SPACER- OPTIONAL PART: 233N3221-42 V89954	101102	1
295	233N3221-42	...SPACER- SUPPLIER CODE: V89954 OPTIONAL PART: 65B40112-12	101102	1
300	233N3221-33	...BASEPLATE ASSY- SUPPLIER CODE: V89954 USED ON: 233N3221-61	101102	1
302	233N3221-104	...BASEPLATE ASSY- SUPPLIER CODE: V89954 USED ON: 233N3221-110	101102	1
305	BACS21DD1B	....STUD ASSY- SUPPLIER CODE: V08524 SPECIFICATION NUMBER: BACS21DD1B OPTIONAL PART: BACS21DX1B USED ON: 233N3221-33	101102	4
305	PFSC35-38ASEMB	....STUD ASSY- SUPPLIER CODE: V72794 SPECIFICATION NUMBER: BACS21DX1B OPTIONAL PART: BACS21DD1B USED ON: 233N3221-33	101102	4

MISSING ITEM NUMBERS NOT APPLICABLE

– ITEM NOT ILLUSTRATED

BOEING PROPRIETARY - Copyright © - Unpublished Work - See title page for details.

FIG ITEM	PART NUMBER	1 2 3 4 5 6 7 NOMENCLATURE	EFFECT FROM TO	UNITS PER ASSY
54A				
307	PFSC35-38ASEMB	....STUD ASSY-	101102	4
		SUPPLIER CODE:		
		V72794		
		SPECIFICATION NUMBER:		
		BACS21DX1B		
		USED ON:		
		233N3221-104		
310	SF6G6CBB5D	....NUT-	101102	4
		SUPPLIER CODE:		
		V12324		
		SPECIFICATION NUMBER:		
		BACN10PA06-6		
		USED ON:		
		233N3221-33		
312	SF6G6CBB5D	....NUT-	101102	4
		SUPPLIER CODE:		
		V12324		
		USED ON:		
		233N3221-104		
315	233N3221-37	....BASEPLATE-	101102	1
		SUPPLIER CODE:		
		V89954		
		USED ON:		
		233N3221-33		
317	233N3221-105	....BASEPLATE-	101102	1
		SUPPLIER CODE:		
		V89954		
		USED ON:		
		233N3221-104		
320	BACP10U030OT	.PANEL ASSY	101102	1
325	2263-01-1	.INDICATOR ASSY-COMPT TEMP	101102	RF
		SUPPLIER CODE:		
		V52013		
		FUNCTIONAL DESCRIPTION:		
		INDICATOR SHOWS		
		COMPARTMENT TEMPERATURE		
		FOR EA OF THE THREE		
		CABIN ZONES		
		SPECIFICATION NUMBER:		
		S231N211-3		
		ELECTRICAL EQUIP NUMBER:		
		M10078		
		COMPONENT MAINT MANUAL REF:		
		21-61-02		
		FOR BREAKDOWN SEE:		
		21-65-51-01		

MISSING ITEM NUMBERS NOT APPLICABLE

– ITEM NOT ILLUSTRATED

BOEING PROPRIETARY - Copyright © - Unpublished Work - See title page for details.

FIG ITEM	PART NUMBER	1 2 3 4 5 6 7 NOMENCLATURE	EFFECT FROM TO	UNITS PER ASSY
54A				
325	20-210-01	.INDICATOR ASSY-COMPT TEMP SUPPLIER CODE: V35012 SPECIFICATION NUMBER: S231N211-2 ELECTRICAL EQUIP NUMBER: M10078 COMPONENT MAINT MANUAL REF: 21-65-01 FOR BREAKDOWN SEE: 21-65-51-01	101102	RF
330	233N3217-300	.PANEL ASSY-AIR CONDITIONING CONT SUPPLIER CODE: V89954 ELECTRICAL EQUIP NUMBER: M10193 COMPONENT MAINT MANUAL REF: 21-51-71 QUALIFIED I/W DATA: THE 233N3217-300 PANEL ASSY IS I/W THE 233N3217-15 PANEL ASSY T/W THE S233T100-6014 LIGHTPLATE AND (2) BP248-127 KNOBS AND (3) BP260-113 KNOBS FOR OTHER SYS DETAILS SEE: 21-25-55-03 21-51-54-03 21-61-04-03 33-13-01-39	101102	1
- 335	233N3217-15	..PANEL ASSY- SUPPLIER CODE: V89954 COMPONENT MAINT MANUAL REF: 21-51-71 QUALIFIED I/W DATA: THE 233N3217-300 PANEL ASSY IS I/W THE 233N3217-15 PANEL ASSY T/W THE S233T100-6014 LIGHTPLATE AND (2) BP248-127 KNOBS AND (3) BP260-113 KNOBS	101102	RF
340	233N3250-13	...BRACKET	101102	1

MISSING ITEM NUMBERS NOT APPLICABLE

- ITEM NOT ILLUSTRATED

BOEING PROPRIETARY - Copyright © - Unpublished Work - See title page for details.

FIG ITEM	PART NUMBER	1 2 3 4 5 6 7 NOMENCLATURE	EFFECT FROM TO	UNITS PER ASSY
54A				
		ATTACHING PARTS		
- 345	NAS1801-06-5	...SCREW-	101102	3
		OPTIONAL PART:		
		BACS12HN06-5		
- 345	BACS12HN06-5	...SCREW-	101102	3
		OPTIONAL PART:		
		NAS1801-06-5		
- 350	BACW10EC06S	...WASHER-	101102	3
		-------*-------		
355	69B46200-14	...STANDOFF	101102	3
		ATTACHING PARTS		
- 360	NAS514P632-5	...SCREW	101102	3
		-------*-------		
365	233N3217-2	...BASEPLATE ASSY-	101102	1
		SUPPLIER CODE:		
		V89954		
		OPTIONAL PART:		
		233N3217-9		
		V89954		
365	233N3217-9	...BASEPLATE ASSY-	101102	1
		SUPPLIER CODE:		
		V89954		
		OPTIONAL PART:		
		233N3217-2		
		V89954		
370	PFSC35-38ASEMB	....STUD ASSY-	101102	6
		SUPPLIER CODE:		
		V72794		
		SPECIFICATION NUMBER:		
		BACS21DX1B		
375	SF6G6CBB5D	....NUT	101102	5
		SUPPLIER CODE:		
		V12324		
		SPECIFICATION NUMBER:		
		BACN10PA06-6		
380	233N3217-3	....BASEPLATE-	101102	1
		SUPPLIER CODE:		
		V89954		
		USED ON:		
		233N3217-2		
380	233N3217-10	....BASEPLATE-	101102	1
		SUPPLIER CODE:		
		V89954		
		USED ON:		
		233N3217-9		

MISSING ITEM NUMBERS NOT APPLICABLE

- ITEM NOT ILLUSTRATED

BOEING PROPRIETARY - Copyright © - Unpublished Work - See title page for details.

FIG ITEM	PART NUMBER	1 2 3 4 5 6 7 NOMENCLATURE	EFFECT FROM TO	UNITS PER ASSY
54A				
385	233N3215-300	.PANEL ASSY-BLEED AIR SUPPLIER CODE: V89954 ELECTRICAL EQUIP NUMBER: M10259 COMPONENT MAINT MANUAL REF: 36-11-71 QUALIFIED I/W DATA: THE 233N3215-300 PANEL ASSY IS I/W THE 233N3215-16 PANEL ASSY T/W THE S233T100-6009 LIGHTPLATE PRE ALERT SB: 33A0044 FOR OTHER SYS DETAILS SEE: 26-18-51-04 33-13-01-39 36-11-04-01 36-21-00-01 36-21-02-05 36-22-51-03 49-52-00-01 75-32-00-01	101102	1
385	233N3215-1300	.PANEL ASSY-BLEED AIR SUPPLIER CODE: V89954 ELECTRICAL EQUIP NUMBER: M10259 COMPONENT MAINT MANUAL REF: 36-11-71 POST ALERT SB: 33A0044 FOR OTHER SYS DETAILS SEE: 26-18-51-04 33-13-01-39 36-11-04-01 36-21-00-01 36-21-02-05 36-22-51-03 49-52-00-01 75-32-00-01	101102	1

MISSING ITEM NUMBERS NOT APPLICABLE

– ITEM NOT ILLUSTRATED

BOEING PROPRIETARY - Copyright © - Unpublished Work - See title page for details.

FIG ITEM	PART NUMBER	1 2 3 4 5 6 7 NOMENCLATURE	EFFECT FROM TO	UNITS PER ASSY
54A				
385	233N3215-303	.PANEL ASSY-BLEED AIR SUPPLIER CODE: V89954 ELECTRICAL EQUIP NUMBER: M10259 COMPONENT MAINT MANUAL REF: 36-11-71 FOR OTHER SYS DETAILS SEE: 26-18-51-04 33-13-01-39 36-11-04-01 36-21-00-01 36-21-02-05 36-22-51-03 49-52-00-01 75-32-00-01	101102	1
- 390	233N3215-16	..PANEL ASSY- SUPPLIER CODE: V89954 MISCELLANEOUS DATA: FOR SPARES PROCURE NEXT HIGHER ASSY COMPONENT MAINT MANUAL REF: 36-11-71 QUALIFIED I/W DATA: THE 233N3215-300 PANEL ASSY IS I/W THE 233N3215-16 PANEL ASSY T/W THE S233T100-6009 LIGHTPLATE USED ON: 233N3215-300 PRE ALERT SB: 33A0044	101102	RF
- 390	233N3215-1016	..PANEL ASSY- SUPPLIER CODE: V89954 COMPONENT MAINT MANUAL REF: 36-11-71 POST ALERT SB: 33A0044	101102	RF

MISSING ITEM NUMBERS NOT APPLICABLE

- ITEM NOT ILLUSTRATED

BOEING PROPRIETARY - Copyright © - Unpublished Work - See title page for details.

FIG ITEM	PART NUMBER	1 2 3 4 5 6 7 NOMENCLATURE	EFFECT FROM TO	UNITS PER ASSY
54A				
- 390	233N3215-22	..PANEL ASSY- SUPPLIER CODE: V89954 MISCELLANEOUS DATA: FOR SPARES PROCURE NEXT HIGHER ASSY ELECTRICAL EQUIP NUMBER: M10259 COMPONENT MAINT MANUAL REF: 36-11-71 USED ON: 233N3215-303	101102	RF
395	233N3250-39	...BRACKET ATTACHING PARTS	101102	1
- 400	NAS1801-06-5	...SCREW- USED ON: 233N3215-16 233N3215-1016	101102	3
- 400	NAS1801-06-5	...SCREW- OPTIONAL PART: BACS12HN06-5 USED ON: 233N3215-22	101102	3
- 400	BACS12HN06-5	...SCREW- OPTIONAL PART: NAS1801-06-5 USED ON: 233N3215-22	101102	3
- 405	MS35338-41	...WASHER- USED ON: 233N3215-16 233N3215-1016	101102	3
- 405	BACW10EC06S	...WASHER- USED ON: 233N3215-22 -------*-------	101102	3
410	69B46200-11	...STANDOFF ATTACHING PARTS	101102	3
- 415	NAS514P632-5	...SCREW- USED ON: 233N3215-16 233N3215-1016	101102	3
- 415	FH6C5TPKL12BN	...SCREW- SUPPLIER CODE: V12324 USED ON: 233N3215-22 -------*-------	101102	3

MISSING ITEM NUMBERS NOT APPLICABLE

- ITEM NOT ILLUSTRATED

BOEING PROPRIETARY - Copyright © - Unpublished Work - See title page for details.

FIG ITEM	PART NUMBER	1 2 3 4 5 6 7 NOMENCLATURE	EFFECT FROM TO	UNITS PER ASSY
54A				
420	233N3215-10	...BASEPLATE ASSY-	101102	1
		SUPPLIER CODE:		
		V89954		
425	PFSC35-38ASEMB	....STUD ASSY-	101102	4
		SUPPLIER CODE:		
		V72794		
		SPECIFICATION NUMBER:		
		BACS21DX1B		
430	SF6G6CBB5D	....NUT	101102	4
		SUPPLIER CODE:		
		V12324		
		SPECIFICATION NUMBER:		
		BACN10PA06-6		
435	233N3215-11	....BASEPLATE-	101102	1
		SUPPLIER CODE:		
		V89954		
440	233T3200-1	.PANEL ASSY	101102	1
445	BACS21DD1B	..STUD ASSY	101102	3
		SUPPLIER CODE:		
		V08524		
		SPECIFICATION NUMBER:		
		BACS21DD1B		
450	233T3200-3	..BASEPLATE	101102	1

MISSING ITEM NUMBERS NOT APPLICABLE

– ITEM NOT ILLUSTRATED

BOEING PROPRIETARY - Copyright © - Unpublished Work - See title page for details.

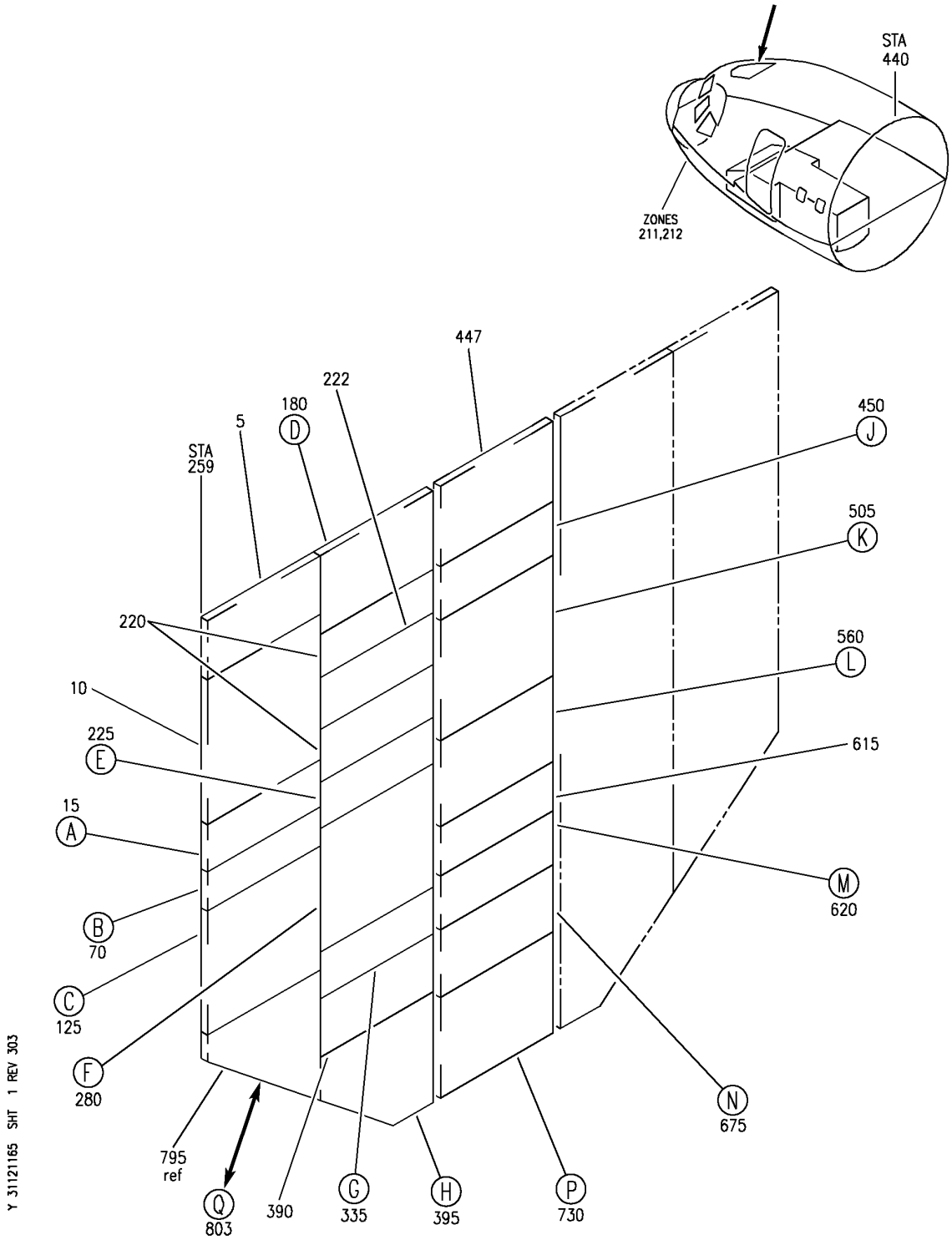

PANEL INSTL-P5 OVHD (INDICATING/RECORDING SYSTEMS ONLY)
FIGURE 65 (SHEET 1)

BOEING PROPRIETARY - Copyright © - Unpublished Work - See title page for details.

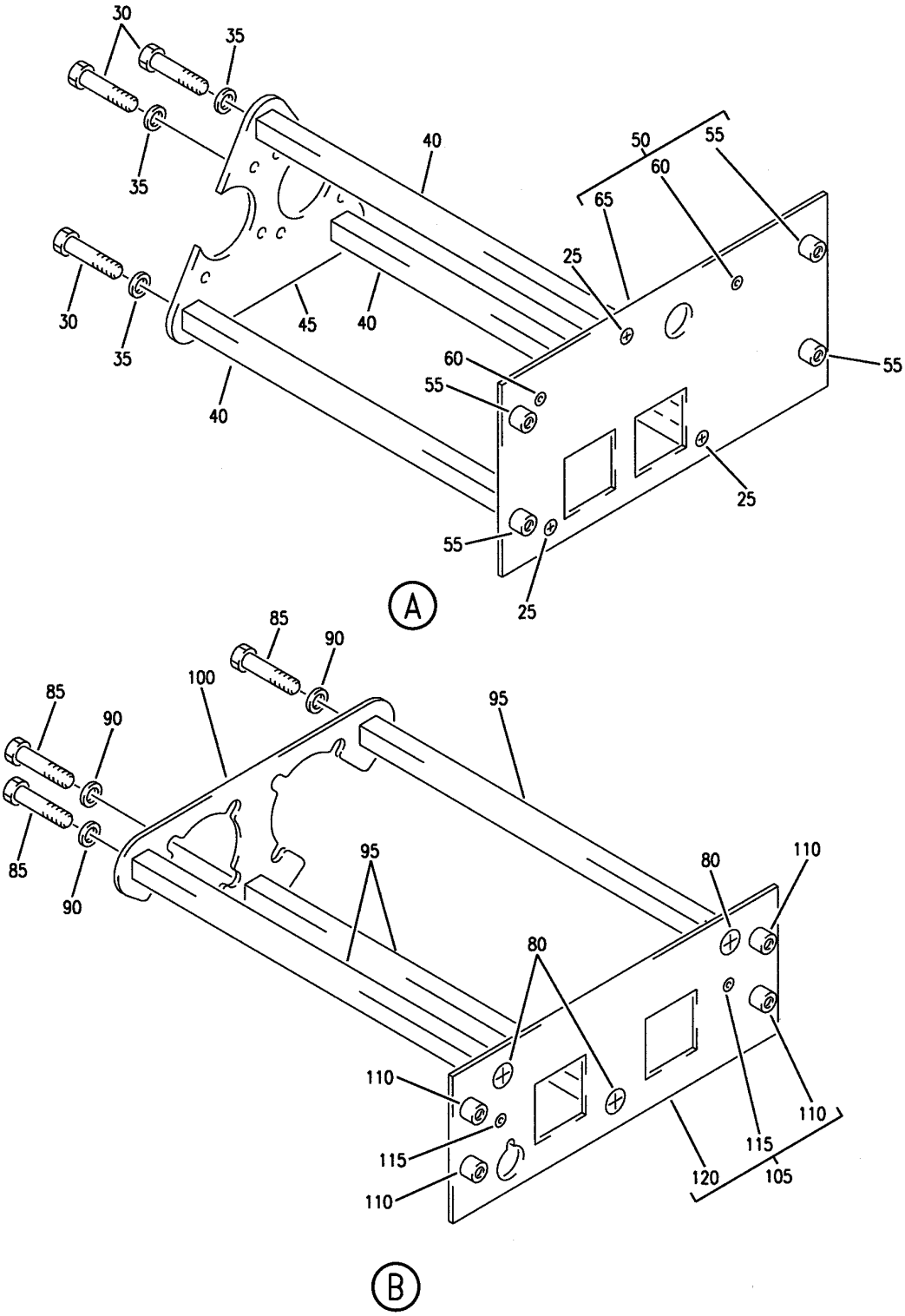

PANEL INSTL-P5 OVHD (INDICATING/RECORDING SYSTEMS ONLY)
FIGURE 65 (SHEET 2)

BOEING PROPRIETARY - Copyright © - Unpublished Work - See title page for details.

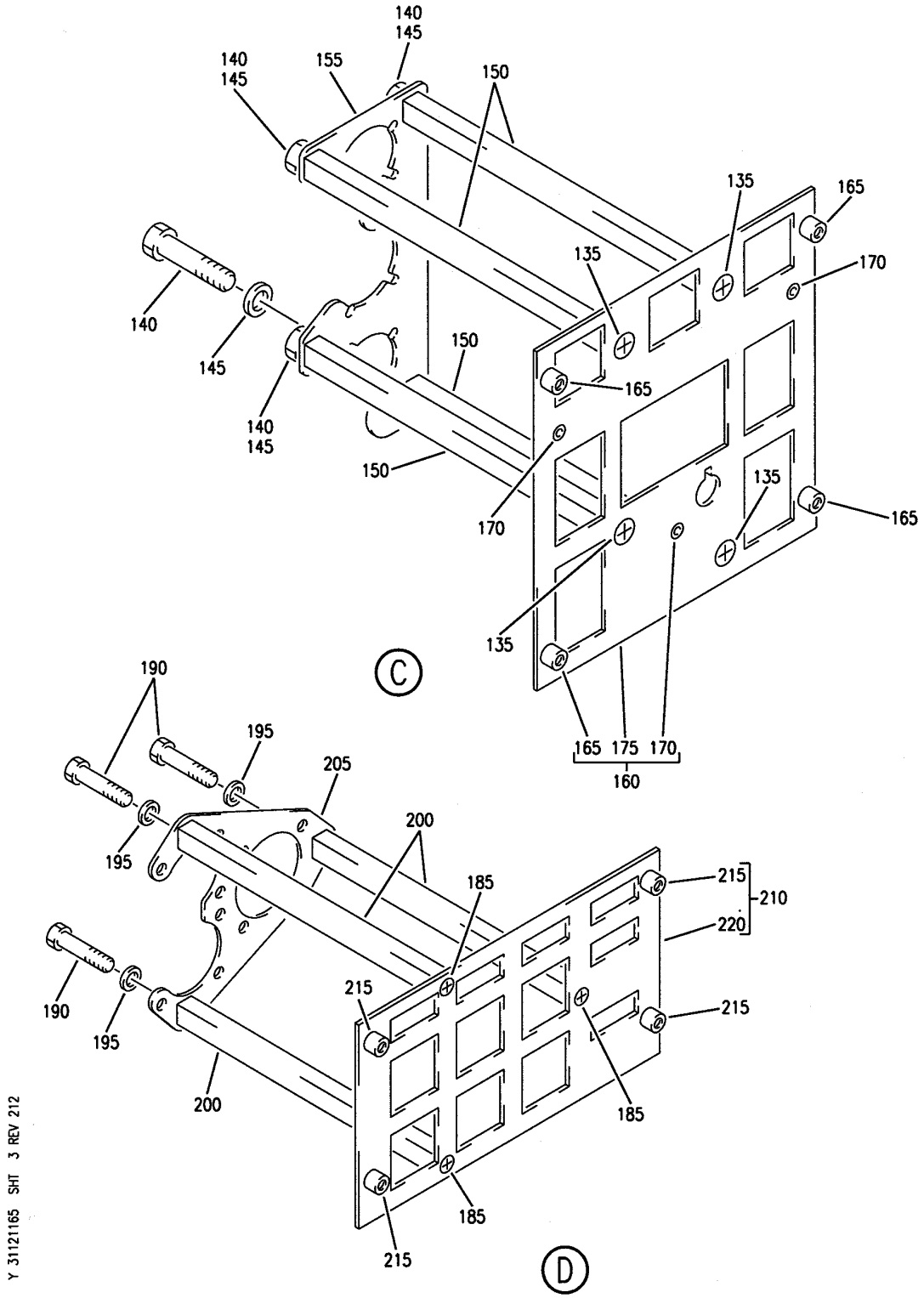

PANEL INSTL-P5 OVHD (INDICATING/RECORDING SYSTEMS ONLY)
FIGURE 65 (SHEET 3)

BOEING PROPRIETARY - Copyright © - Unpublished Work - See title page for details.

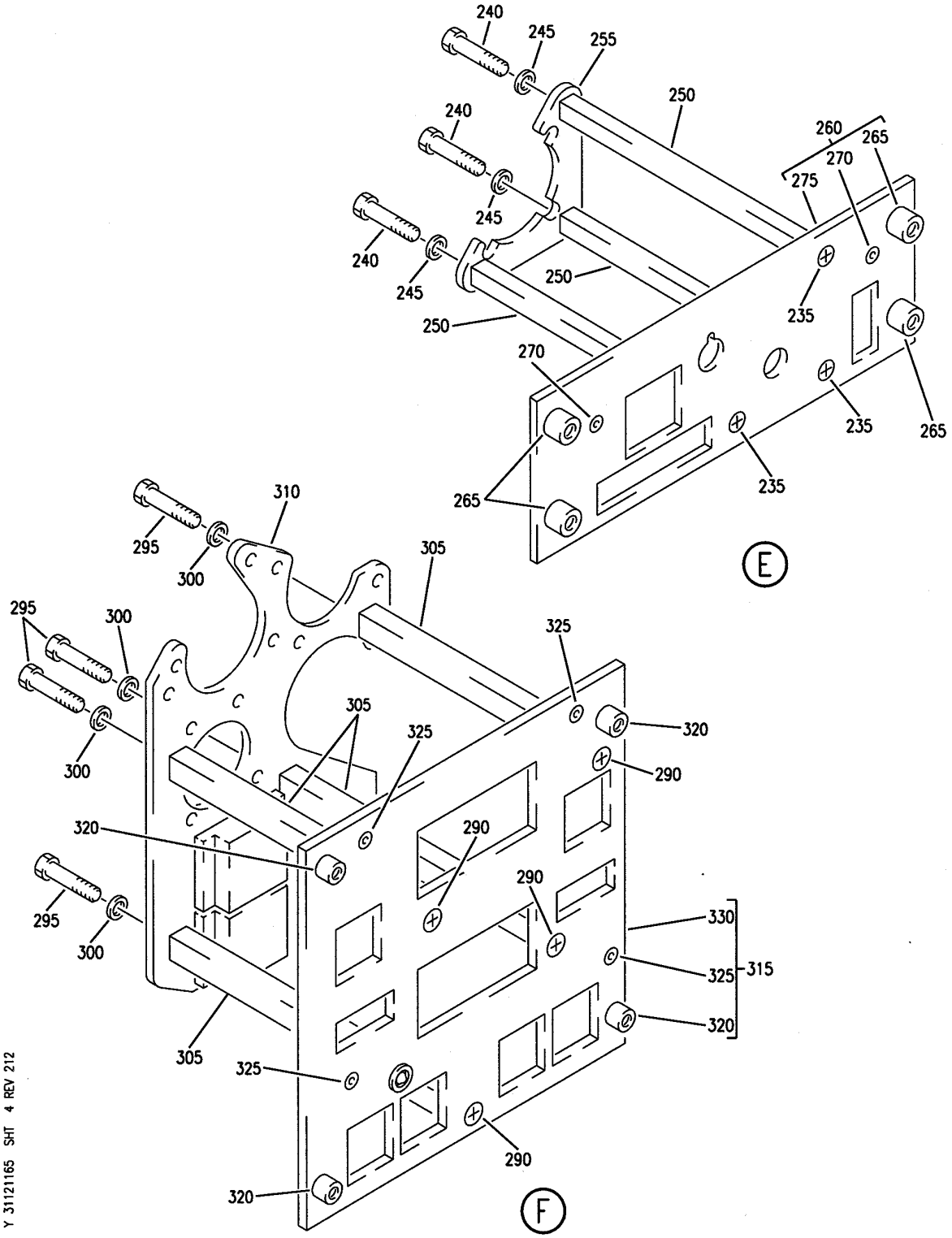

PANEL INSTL-P5 OVHD (INDICATING/RECORDING SYSTEMS ONLY)
FIGURE 65 (SHEET 4)

BOEING PROPRIETARY - Copyright © - Unpublished Work - See title page for details.

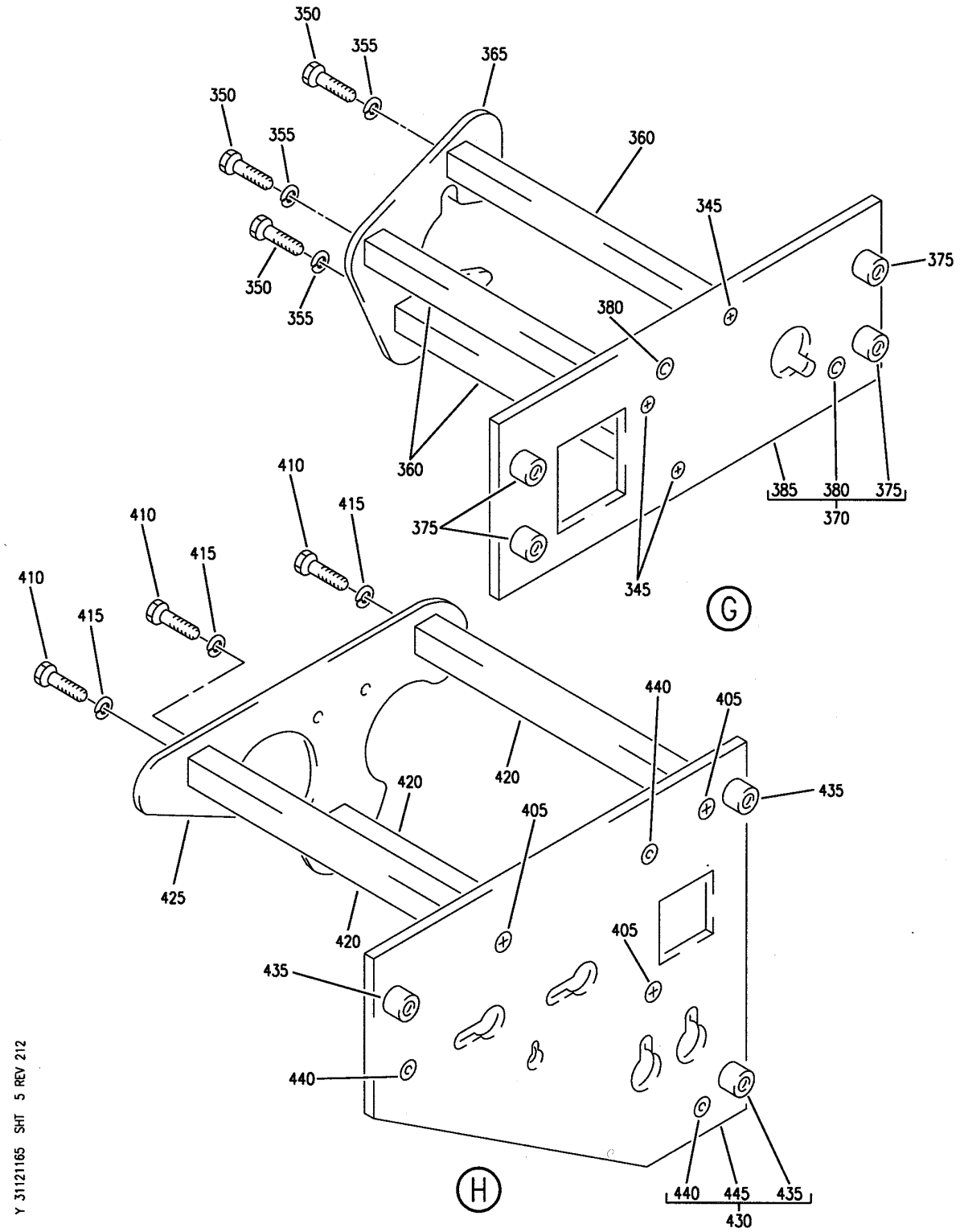

PANEL INSTL-P5 OVHD (INDICATING/RECORDING SYSTEMS ONLY)
FIGURE 65 (SHEET 5)

BOEING PROPRIETARY - Copyright © - Unpublished Work - See title page for details.

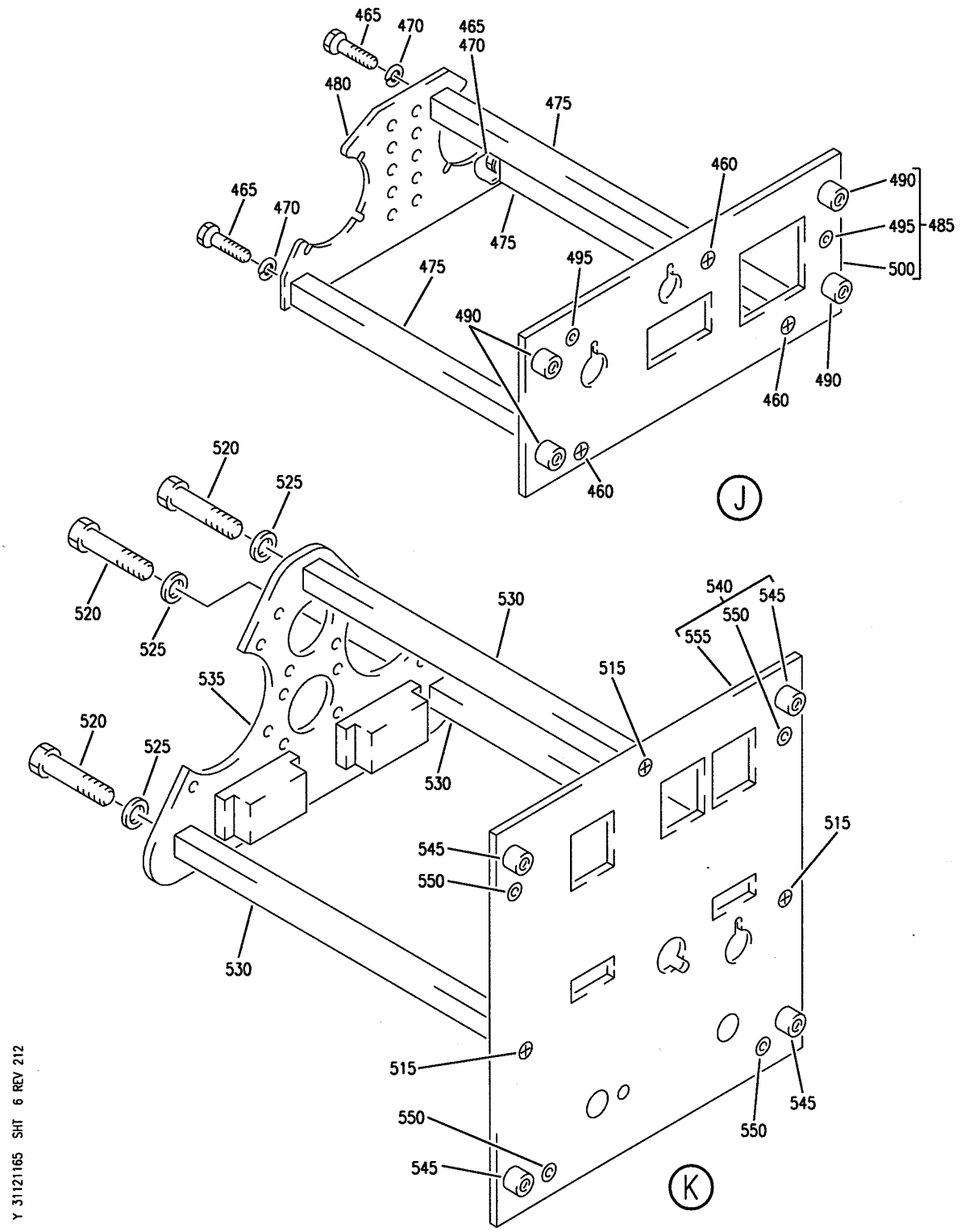

PANEL INSTL-P5 OVHD (INDICATING/RECORDING SYSTEMS ONLY)
FIGURE 65 (SHEET 6)

BOEING PROPRIETARY - Copyright © - Unpublished Work - See title page for details.

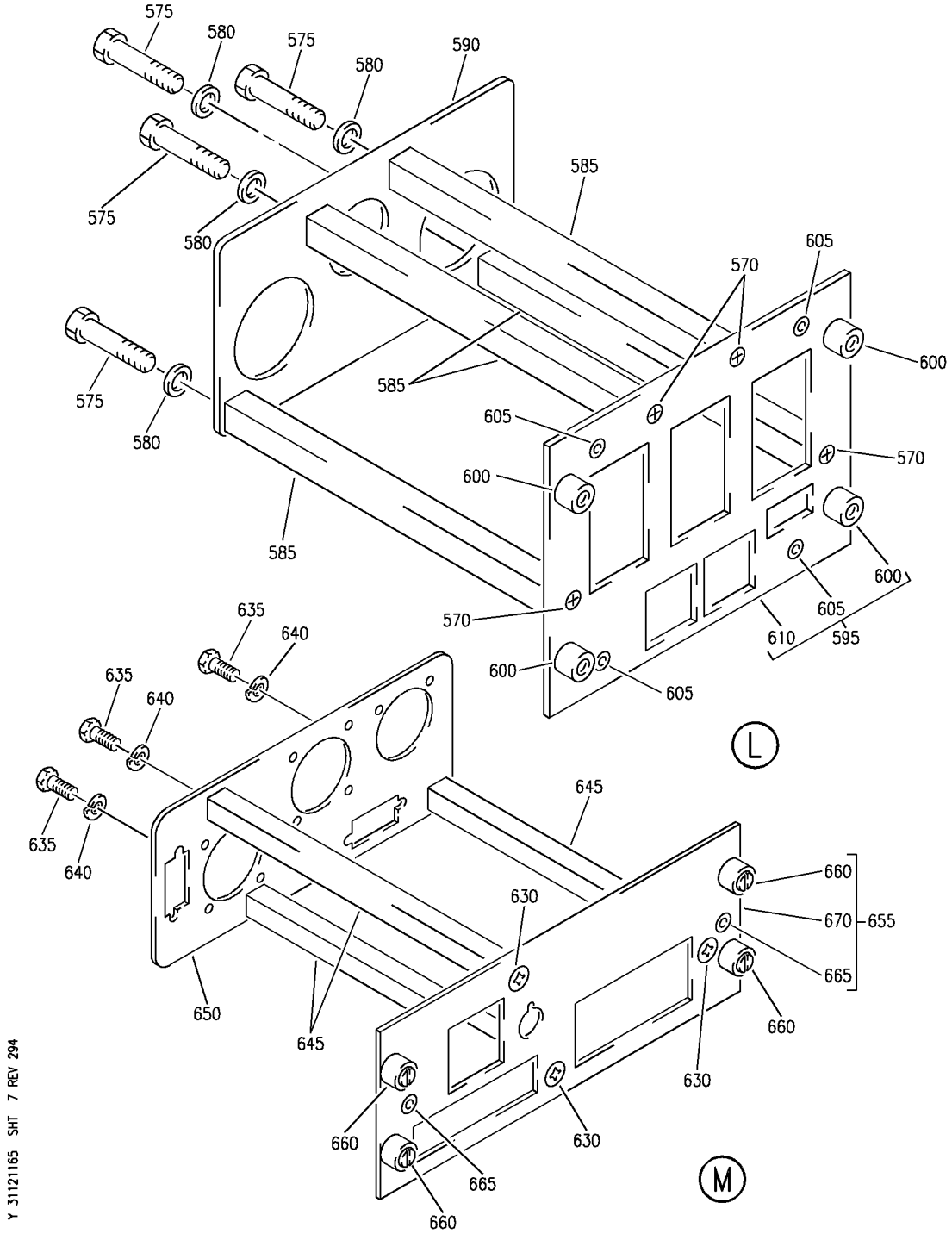

PANEL INSTL-P5 OVHD (INDICATING/RECORDING SYSTEMS ONLY)
FIGURE 65 (SHEET 7)

BOEING PROPRIETARY - Copyright © - Unpublished Work - See title page for details.

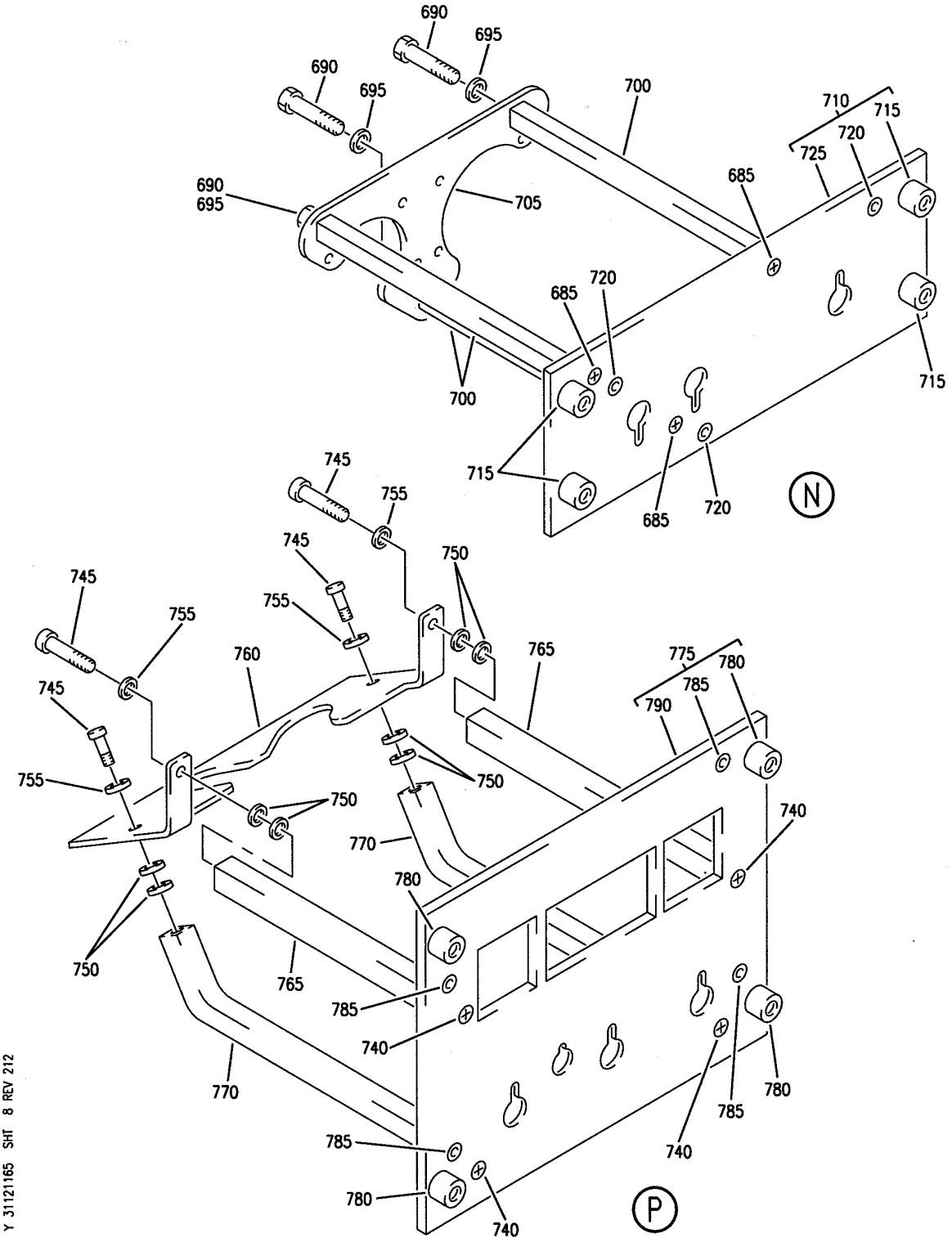

PANEL INSTL-P5 OVHD (INDICATING/RECORDING SYSTEMS ONLY)
FIGURE 65 (SHEET 8)

BOEING PROPRIETARY - Copyright © - Unpublished Work - See title page for details.

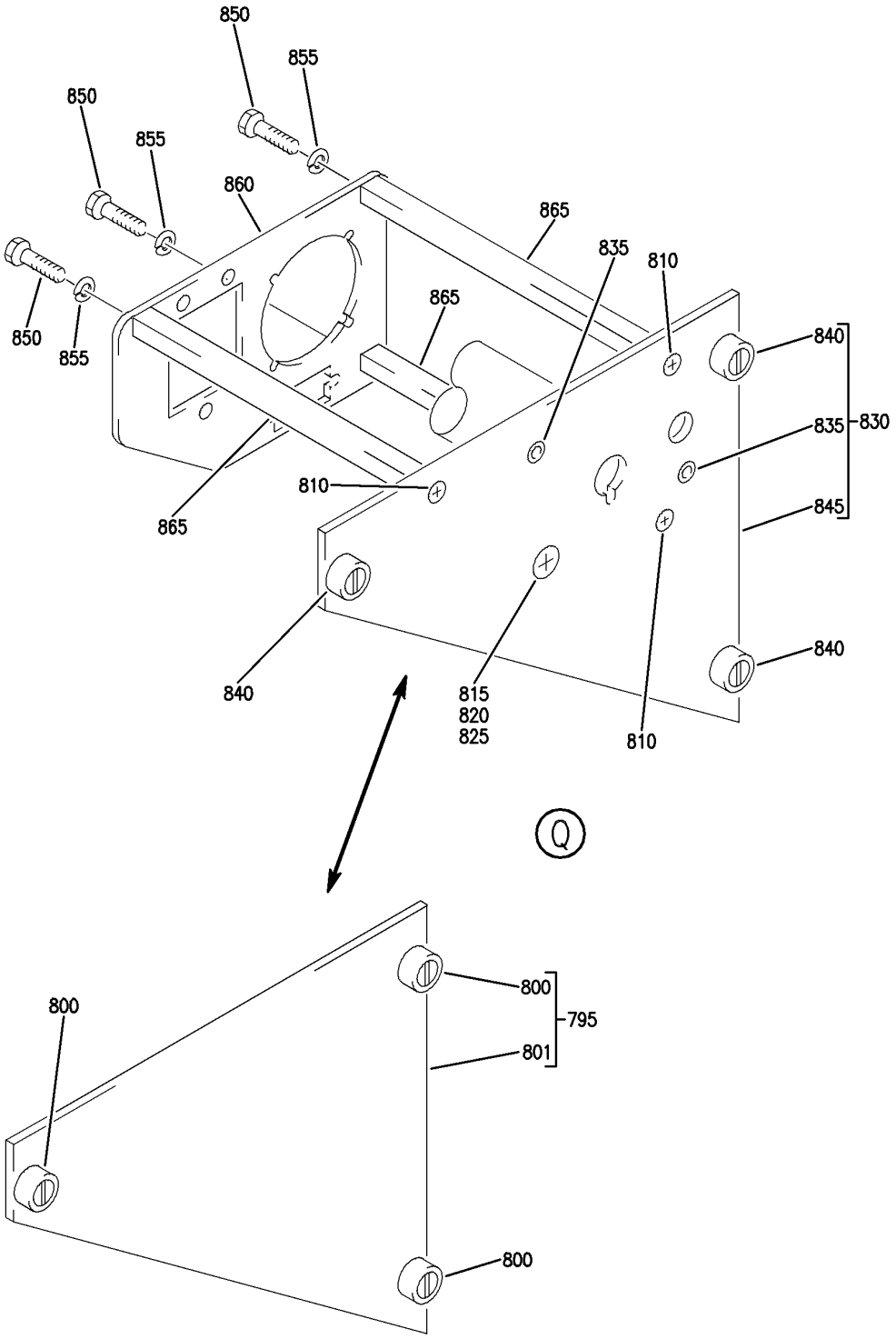

PANEL INSTL-P5 OVHD (INDICATING/RECORDING SYSTEMS ONLY)
FIGURE 65 (SHEET 9)

BOEING PROPRIETARY - Copyright © - Unpublished Work - See title page for details.

FIG ITEM	PART NUMBER	1 2 3 4 5 6 7 NOMENCLATURE	EFFECT FROM TO	UNITS PER ASSY
65				
		PANEL INSTL-P5 OVHD (INDICATING/RECORDING SYSTEMS ONLY)	108120	
- 1	233N3103-59	PANEL INSTL-P5 OVHD (INDICATING/RECORDING SYSTEMS ONLY) FOR NHA/OTHER SYS DET SEE: 25-10-00-15E	108120	RF
7	BACP10U0262T	.PANEL-	108120	2
10	CG1093AD01	.PANEL ASSY-IRS MODE SELECT SUPPLIER CODE: V94580 SPECIFICATION NUMBER: S242T101-203 ELECTRICAL EQUIP NUMBER: M00059 COMPONENT MAINT MANUAL REF: 34-21-21 QUALIFIED I/W DATA: CG1093AD01 I/W CG1093AC01 EXCEPT CG1093AD01 DISPLAYS IRU MAINTENANCE CODES AND THE TIME REMAINING IN ALIGNMENT CG1093AD01 I/W CG1093AD02 EXCEPT CG1093AD01 DISPLAYS IRU MAINTENANCE CODES AND THE TIME REMAINING IN ALIGNMENT S242T101-206/CG1093AD03 CAN REPLACE AND BE REPLACED BY S242T101-203/CG1093AD01 EXCEPT FOR NL001-NL999, NU701-NU999 FOR 757, AND VQ001-VQ999 FOR 767, WHERE S242T101-206/CG1093AD03 MUST BE USED. FOR BREAKDOWN SEE: 34-21-02-01	108120	RF

MISSING ITEM NUMBERS NOT APPLICABLE

- ITEM NOT ILLUSTRATED

BOEING PROPRIETARY - Copyright © - Unpublished Work - See title page for details.

FIG ITEM	PART NUMBER	1 2 3 4 5 6 7 NOMENCLATURE	EFFECT FROM TO	UNITS PER ASSY
65				
15	233N3216-300	.PANEL ASSY-YAW DAMPER SUPPLIER CODE: V89954 ELECTRICAL EQUIP NUMBER: M10250 COMPONENT MAINT MANUAL REF: 22-21-71 QUALIFIED I/W DATA: THE 233N3216-300 PANEL ASSY IS I/W THE 233N3216-20 PANEL ASSY T/W THE S233T100-1075 LIGHTPLATE PRE ALERT SB: 33A0044 FOR OTHER SYS DETAILS SEE: 22-21-01-04 33-13-01-02	108120	1
15	233N3216-1300	.PANEL ASSY-YAW DAMPER SUPPLIER CODE: V89954 ELECTRICAL EQUIP NUMBER: M10250 COMPONENT MAINT MANUAL REF: 22-21-71 POST ALERT SB: 33A0044 FOR OTHER SYS DETAILS SEE: 22-21-01-04 33-13-01-02	108120	1
R R R R R R R 15	233N3216-309	.PANEL ASSY-YAW DAMPER SUPPLIER CODE: V89954 ELECTRICAL EQUIP NUMBER: M10250 COMPONENT MAINT MANUAL REF: 22-21-71	108120	1

MISSING ITEM NUMBERS NOT APPLICABLE

– ITEM NOT ILLUSTRATED

BOEING PROPRIETARY - Copyright © - Unpublished Work - See title page for details.

FIG ITEM	PART NUMBER	1 2 3 4 5 6 7 NOMENCLATURE	EFFECT FROM TO	UNITS PER ASSY
65				
- 20	233N3216-20	..PANEL ASSY- SUPPLIER CODE: V89954 MISCELLANEOUS DATA: FOR SPARES PROCURE NEXT HIGHER ASSY COMPONENT MAINT MANUAL REF: 22-21-71 QUALIFIED I/W DATA: THE 233N3216-300 PANEL ASSY IS I/W THE 233N3216-20 PANEL ASSY T/W THE S233T100-1075 LIGHTPLATE PRE ALERT SB: 33A0044	108120	RF
- 20	233N3216-1020	..PANEL ASSY- SUPPLIER CODE: V89954 COMPONENT MAINT MANUAL REF: 22-21-71 POST ALERT SB: 33A0044	108120	RF
- 20	233N3216-35	..PANEL ASSY- SUPPLIER CODE: V89954 MISCELLANEOUS DATA: FOR SPARES PROCURE NEXT HIGHER ASSY ELECTRICAL EQUIP NUMBER: M10250 COMPONENT MAINT MANUAL REF: 22-21-71	108120	1
25	NAS514P632-5	...SCREW- USED ON: 233N3216-20 233N3216-1020	108120	3
25	FH6C5CPL12BN	...SCREW- SUPPLIER CODE: V12324 USED ON: 233N3216-35	108120	3
30	NAS1801-06-5	...SCREW- USED ON: 233N3216-20 233N3216-1020	108120	3
30	BACS12CK06U5	...SCREW- USED ON: 233N3216-35	108120	3

MISSING ITEM NUMBERS NOT APPLICABLE

- ITEM NOT ILLUSTRATED

BOEING PROPRIETARY - Copyright © - Unpublished Work - See title page for details.

FIG ITEM	PART NUMBER	1 2 3 4 5 6 7 NOMENCLATURE	EFFECT FROM TO	UNITS PER ASSY
65				
35	MS35338-41	...WASHER-	108120	3
		USED ON:		
		233N3216-20		
		233N3216-1020		
35	BACW10EC06C	...WASHER-	108120	3
		USED ON:		
		233N3216-35		
40	69B46200-12	...STANDOFF	108120	3
45	233N3250-15	...BRACKET	108120	1
50	233N3216-2	...BASEPLATE ASSY-	108120	1
		SUPPLIER CODE:		
		V89954		
55	PFSC35-38ASEMB	....STUD ASSY-	108120	4
		SUPPLIER CODE:		
		V72794		
		SPECIFICATION NUMBER:		
		BACS21DX1B		
60	SF6G6CBB5D	....NUT	108120	2
		SUPPLIER CODE:		
		V12324		
		SPECIFICATION NUMBER:		
		BACN10PA06-6		
65	233N3216-3	....BASEPLATE-	108120	1
		SUPPLIER CODE:		
		V89954		
70	233T3242-301	.PANEL ASSY-EEC CONT	108120	1
		SUPPLIER CODE:		
		V89954		
		ELECTRICAL EQUIP NUMBER:		
		M10761		
		COMPONENT MAINT MANUAL REF:		
		73-21-86		
		QUALIFIED I/W DATA:		
		233T3242-301 PANEL ASSY		
		IS I/W 233T3242-6 PANEL		
		ASSY T/W S233T100-1092		
		LIGHTPLATE		
		PRE ALERT SB:		
		33A0044		
		FOR OTHER SYS DETAILS SEE:		
		33-13-01-02		
		73-21-52-02		

MISSING ITEM NUMBERS NOT APPLICABLE

– ITEM NOT ILLUSTRATED

BOEING PROPRIETARY - Copyright © - Unpublished Work - See title page for details.

FIG ITEM	PART NUMBER	1 2 3 4 5 6 7 NOMENCLATURE	EFFECT FROM TO	UNITS PER ASSY
65				
70	233T3242-1301	.PANEL ASSY-EEC CONT SUPPLIER CODE: V89954 ELECTRICAL EQUIP NUMBER: M10761 COMPONENT MAINT MANUAL REF: 73-21-86 POST ALERT SB: 33A0044 FOR OTHER SYS DETAILS SEE: 33-13-01-02 73-21-52-02	108120	1
- 75	233T3242-6	..PANEL ASSY- SUPPLIER CODE: V89954 COMPONENT MAINT MANUAL REF: 73-21-86 QUALIFIED I/W DATA: 233T3242-301 PANEL ASSY IS I/W 233T3242-6 PANEL ASSY T/W S233T100-1092 LIGHTPLATE PRE ALERT SB: 33A0044	108120	RF
- 75	233T3242-1006	..PANEL ASSY- SUPPLIER CODE: V89954 COMPONENT MAINT MANUAL REF: 73-21-86 POST ALERT SB: 33A0044	108120	RF
80	NAS514P632-5P	...SCREW	108120	3
85	BACS12CK06U5	...SCREW-	108120	3
90	BACW10EC06C	...WASHER-	108120	3
95	69B46200-12	...STANDOFF	108120	3
100	233T6200-142	...BRACKET-SPRT	108120	1
105	233T3242-2	...BASEPLATE ASSY- SUPPLIER CODE: V89954	108120	1
110	PFSC35-38ASEMB	....STUD ASSY SUPPLIER CODE: V72794 SPECIFICATION NUMBER: BACS21DX1B	108120	4
115	SF6G6CBB5D	....NUT- SUPPLIER CODE: V12324	108120	2
120	BACP10U0187N	....BASEPLATE	108120	1

MISSING ITEM NUMBERS NOT APPLICABLE

- ITEM NOT ILLUSTRATED

BOEING PROPRIETARY - Copyright © - Unpublished Work - See title page for details.

FIG ITEM	PART NUMBER	1 2 3 4 5 6 7 NOMENCLATURE	EFFECT FROM TO	UNITS PER ASSY
65				
125	233N3205-300	.PANEL ASSY-HYDR	108120	1
		SUPPLIER CODE:		
		V89954		
		ELECTRICAL EQUIP NUMBER:		
		M10050		
		COMPONENT MAINT MANUAL REF:		
		29-00-71		
		QUALIFIED I/W DATA:		
		233N3205-300 PANEL ASSY		
		IS I/W 233N3205-24 PANEL		
		ASSY T/W S233T100-6044		
		LIGHTPLATE		
		FOR OTHER SYS DETAILS SEE:		
		29-11-02-03		
		29-11-05-04		
		29-11-52-07		
		29-31-00-01		
		29-32-51-03		
		29-33-52-03		
		33-13-01-02		
- 130	233N3205-24	..PANEL ASSY-	108120	RF
		SUPPLIER CODE:		
		V89954		
		COMPONENT MAINT MANUAL REF:		
		29-00-71		
		QUALIFIED I/W DATA:		
		233N3205-300 PANEL ASSY		
		IS I/W 233N3205-24 PANEL		
		ASSY T/W S233T100-6044		
		LIGHTPLATE		
135	NAS514P632-5	...SCREW	108120	4
140	NAS1801-06-5	...SCREW-	108120	4
		OPTIONAL PART:		
		BACS12HN06-5		
140	BACS12HN06-5	...SCREW-	108120	4
		OPTIONAL PART:		
		NAS1801-06-5		
145	BACW10EC06S	...WASHER-	108120	4
150	69B46200-11	...STANDOFF	108120	4
155	233N3250-8	...BRACKET	108120	1
160	233N3205-2	...BASEPLATE ASSY-	108120	1
		SUPPLIER CODE:		
		V89954		
165	PFSC35-38ASEMB	....STUD ASSY-	108120	4
		SUPPLIER CODE:		
		V72794		
		SPECIFICATION NUMBER:		
		BACS21DX1B		

MISSING ITEM NUMBERS NOT APPLICABLE

- ITEM NOT ILLUSTRATED

BOEING PROPRIETARY - Copyright © - Unpublished Work - See title page for details.

FIG ITEM	PART NUMBER	1 2 3 4 5 6 7 NOMENCLATURE	EFFECT FROM TO	UNITS PER ASSY
65				
170	SF6G6CBB5D	....NUT SUPPLIER CODE: V12324 SPECIFICATION NUMBER: BACN10PA06-6	108120	3
175	233N3205-3	....BASEPLATE- SUPPLIER CODE: V89954	108120	1
180	233N3202-17	.PANEL ASSY-ANN. LIGHTS SUPPLIER CODE: V89954 ELECTRICAL EQUIP NUMBER: M10394 COMPONENT MAINT MANUAL REF: 33-16-71 FOR OTHER SYS DETAILS SEE: 22-24-51-02 27-21-53-02 27-41-55-01 27-61-51-03 27-62-52-02 30-31-51-02 30-32-51-01 30-33-51-02 32-42-52-03 52-71-51-02	108120	1
185	NAS514P632-5	..SCREW	108120	3
190	BACS12CB06-5	..SCREW	108120	3
195	MS35338-41	..WASHER	108120	3
200	69B46200-10	..STANDOFF	108120	3
205	233N3250-7	..BRACKET-CONN.	108120	1
210	233N3202-2	..BASEPLATE ASSY- SUPPLIER CODE: V89954	108120	1
215	BACS21DD1B	...STUD ASSY SUPPLIER CODE: V08524 SPECIFICATION NUMBER: BACS21DD1B	108120	4
220	BACP10U0225T	.PANEL	108120	2

MISSING ITEM NUMBERS NOT APPLICABLE

– ITEM NOT ILLUSTRATED

BOEING PROPRIETARY - Copyright © - Unpublished Work - See title page for details.

FIG ITEM	PART NUMBER	1 2 3 4 5 6 7 NOMENCLATURE	EFFECT FROM TO	UNITS PER ASSY
65				
225	233N3211-308	.PANEL ASSY-BATTERY/STBY PWR SUPPLIER CODE: V89954 ELECTRICAL EQUIP NUMBER: M10062 COMPONENT MAINT MANUAL REF: 24-33-72 QUALIFIED I/W DATA: P/N 233N3211-303 IS FULLY I/W P/N 233N3211-308, EXCEPT ONE-WAY FORWARD FOR U/O 233N3103-121, -122, -21,-22 PRE ALERT SB: 33A0044 FOR OTHER SYS DETAILS SEE: 24-31-01-10 24-31-03-09 24-33-04-01 33-13-01-02	108120	1
225	233N3211-1308	.PANEL ASSY-BATTERY/STBY PWR SUPPLIER CODE: V89954 ELECTRICAL EQUIP NUMBER: M10062 COMPONENT MAINT MANUAL REF: 24-33-72 POST ALERT SB: 33A0044 FOR OTHER SYS DETAILS SEE: 24-31-01-10 24-31-03-09 24-33-04-01 33-13-01-02	108120	1

MISSING ITEM NUMBERS NOT APPLICABLE

– ITEM NOT ILLUSTRATED

BOEING PROPRIETARY - Copyright © - Unpublished Work - See title page for details.

FIG ITEM	PART NUMBER	1 2 3 4 5 6 7 NOMENCLATURE	EFFECT FROM TO	UNITS PER ASSY
65				
225	233N3211-319	.PANEL ASSY-BATTERY/STBY PWR SUPPLIER CODE: V89954 ELECTRICAL EQUIP NUMBER: M10062 COMPONENT MAINT MANUAL REF: 24-33-72 FOR OTHER SYS DETAILS SEE: 24-31-01-10 24-31-03-09 24-33-04-01 33-13-01-02	108120	1
- 230	233N3211-54	..PANEL ASSY- SUPPLIER CODE: V89954 COMPONENT MAINT MANUAL REF: 24-33-72 USED ON: 233N3211-54 PRE ALERT SB: 33A0044	108120	RF
- 230	233N3211-1054	..PANEL ASSY- SUPPLIER CODE: V89954 COMPONENT MAINT MANUAL REF: 24-33-72 POST ALERT SB: 33A0044	108120	RF
- 230	233N3211-68	..PANEL ASSY- SUPPLIER CODE: V89954 COMPONENT MAINT MANUAL REF: 24-33-72 USED ON: 233N3211-319	108120	RF
235	FH6C5CPL12BN	...SCREW- SUPPLIER CODE: V12324 USED ON: 233N3211-54	108120	3
235	NAS514P632-5	...SCREW- USED ON: 233N3211-68	108120	3
240	MS51957-27	...SCREW- USED ON: 233N3211-54	108120	3

MISSING ITEM NUMBERS NOT APPLICABLE

- ITEM NOT ILLUSTRATED

BOEING PROPRIETARY - Copyright © - Unpublished Work - See title page for details.

FIG ITEM	PART NUMBER	1 2 3 4 5 6 7 NOMENCLATURE	EFFECT FROM TO	UNITS PER ASSY
65				
240	BACS12CK06U5	...SCREW-	108120	3
		USED ON:		
		233N3211-68		
245	MS35338-136	...WASHER-	108120	3
		USED ON:		
		233N3211-54		
245	BACW10EC06C	...WASHER-	108120	3
		USED ON:		
		233N3211-68		
250	69B46200-17	...STANDOFF	108120	3
255	233N3250-5	...BRACKET	108120	1
260	233N3211-49	...BASEPLATE ASSY-	108120	1
		SUPPLIER CODE:		
		V89954		
265	PFSC35-38ASEMB	....STUD ASSY	108120	4
		SUPPLIER CODE:		
		V72794		
		SPECIFICATION NUMBER:		
		BACS21DX1B		
270	SF6G6CBB5D	....NUT-	108120	2
		SUPPLIER CODE:		
		V12324		
275	BACP10U0225NC	....PANEL ASSY-	108120	1
280	233N3209-305	.PANEL ASSY-E/E	108120	1
		SUPPLIER CODE:		
		V89954		
		ELECTRICAL EQUIP NUMBER:		
		M10063		
		COMPONENT MAINT MANUAL REF:		
		24-22-71		
		PRE ALERT SB:		
		33A0044		
		FOR OTHER SYS DETAILS SEE:		
		24-11-52-05		
		24-22-01-03		
		24-41-51-04		
		24-51-62-01		
		33-13-01-02		

MISSING ITEM NUMBERS NOT APPLICABLE

– ITEM NOT ILLUSTRATED

BOEING PROPRIETARY - Copyright © - Unpublished Work - See title page for details.

FIG ITEM	PART NUMBER	1 2 3 4 5 6 7 NOMENCLATURE	EFFECT FROM TO	UNITS PER ASSY
65				
280	233N3209-1305	.PANEL ASSY-E/E SUPPLIER CODE: V89954 ELECTRICAL EQUIP NUMBER: M10063 COMPONENT MAINT MANUAL REF: 24-22-71 POST ALERT SB: 33A0044 FOR OTHER SYS DETAILS SEE: 24-11-52-05 24-22-01-03 24-41-51-04 24-51-62-01 33-13-01-02	108120	1
280	233N3209-314	.PANEL ASSY-E/E SUPPLIER CODE: V89954 ELECTRICAL EQUIP NUMBER: M10063 COMPONENT MAINT MANUAL REF: 24-22-71 FOR OTHER SYS DETAILS SEE: 24-11-52-05 24-22-01-03 24-41-51-04 24-51-62-01 33-13-01-02	108120	1
- 285	233N3209-41	..PANEL ASSY- SUPPLIER CODE: V89954 MISCELLANEOUS DATA: FOR SPARES PROCURE THE NEXT HIGHER ASSY COMPONENT MAINT MANUAL REF: 24-22-71 USED ON: 233N3209-305 PRE ALERT SB: 33A0044	108120	RF
- 285	233N3209-1041	..PANEL ASSY- SUPPLIER CODE: V89954 COMPONENT MAINT MANUAL REF: 24-22-71 POST ALERT SB: 33A0044	108120	RF

MISSING ITEM NUMBERS NOT APPLICABLE

- ITEM NOT ILLUSTRATED

BOEING PROPRIETARY - Copyright © - Unpublished Work - See title page for details.

FIG ITEM	PART NUMBER	1 2 3 4 5 6 7 NOMENCLATURE	EFFECT FROM TO	UNITS PER ASSY
65				
285	233N3209-50	..PANEL ASSY-	108120	RF
		SUPPLIER CODE:		
		V89954		
		ELECTRICAL EQUIP NUMBER:		
		M10063		
		COMPONENT MAINT MANUAL REF:		
		24-22-71		
		USED ON:		
		233N3209-50		
290	NAS514P632-5	...SCREW-	108120	4
		USED ON:		
		233N3209-41		
		233N3209-1041		
290	FH6C5TPKL12BN	...SCREW-	108120	4
		SUPPLIER CODE:		
		V12324		
		USED ON:		
		233N3209-50		
295	NAS1801-06-5	...SCREW-	108120	4
		USED ON:		
		233N3209-41		
		233N3209-1041		
295	BACS12HN06-5	...SCREW-	108120	4
		USED ON:		
		233N3209-50		
300	MS35338-41	...WASHER-	108120	4
		USED ON:		
		233N3209-41		
		233N3209-1041		
300	BACW10EC06S	...WASHER-	108120	4
		USED ON:		
		233N3209-50		
305	69B46200-12	...STANDOFF	108120	4
310	233N3209-6	...BRACKET ASSY-	108120	1
		SUPPLIER CODE:		
		V89954		
315	233N3209-2	...BASEPLATE ASSY-	108120	1
		SUPPLIER CODE:		
		V89954		
320	PFSC35-38ASEMB	....STUD ASSY-	108120	4
		SUPPLIER CODE:		
		V72794		
		SPECIFICATION NUMBER:		
		BACS21DX1B		
325	SF6G6CBB5D	....NUT	108120	4
		SUPPLIER CODE:		
		V12324		
		SPECIFICATION NUMBER:		
		BACN10PA06-6		

MISSING ITEM NUMBERS NOT APPLICABLE

– ITEM NOT ILLUSTRATED

BOEING PROPRIETARY - Copyright © - Unpublished Work - See title page for details.

FIG ITEM	PART NUMBER	1 2 3 4 5 6 7 NOMENCLATURE	EFFECT FROM TO	UNITS PER ASSY
65				
330	233N3209-3	....BASEPLATE- SUPPLIER CODE: V89954	108120	1
335	233N3222-300	.PANEL ASSY-APU START SUPPLIER CODE: V89954 ELECTRICAL EQUIP NUMBER: M10324 QUALIFIED I/W DATA: THE 233N3222-300 PANEL ASSY IS I/W THE 233N3222-8 PANEL ASSY T/W THE S233T100-6025 LIGHTPLATE AND BP248-127 KNOB. FOR OTHER SYS DETAILS SEE: 33-13-01-02 49-41-00-02 49-70-00-01	108120	1
- 340	233N3222-8	..PANEL ASSY- SUPPLIER CODE: V89954 COMPONENT MAINT MANUAL REF: 49-61-53 QUALIFIED I/W DATA: THE 233N3222-300 PANEL ASSY IS I/W THE 233N3222-8 PANEL ASSY T/W THE S233T100-6025 LIGHTPLATE AND BP248-127 KNOB.	108120	RF
345	NAS514P632-5	...SCREW	108120	3
350	NAS1801-6-5	...SCREW	108120	3
355	MS35338-41	...WASHER	108120	3
360	69B46200-11	...STANDOFF	108120	3
365	233N3250-16	...BRACKET-SPRT	108120	1
370	233N3222-2	...BASEPLATE ASSY- SUPPLIER CODE: V89954	108120	1
375	BACS21DD1B	....STUD ASSY SUPPLIER CODE: V08524 SPECIFICATION NUMBER: BACS21DD1B	108120	4
380	SF6G6CBB5D	....NUT SUPPLIER CODE: V12324 SPECIFICATION NUMBER: BACN10PA06-6	108120	2

MISSING ITEM NUMBERS NOT APPLICABLE

- ITEM NOT ILLUSTRATED

BOEING PROPRIETARY - Copyright © - Unpublished Work - See title page for details.

FIG ITEM	PART NUMBER	1 2 3 4 5 6 7 NOMENCLATURE	EFFECT FROM TO	UNITS PER ASSY
65				
385	233N3222-3	....BASEPLATE- SUPPLIER CODE: V89954	108120	1
390	980-6116-002	.PANEL ASSY-VOICE RECORDER SUPPLIER CODE: V97896 ELECTRICAL EQUIP NUMBER: M00050 COMPONENT MAINT MANUAL REF: 23-70-43 FOR BREAKDOWN SEE: 23-71-05-01	108120	RF
395	233N3214-300	.PANEL ASSY-LIGHTING CONT SUPPLIER CODE: V89954 ELECTRICAL EQUIP NUMBER: M10056 COMPONENT MAINT MANUAL REF: 33-11-71 QUALIFIED I/W DATA: THE 233N3214-300 PANEL ASSY IS I/W THE 233N3214-31 PANEL ASSY T/W THE S233T100-6003 LIGHTPLATE AND (2) RC445-131 KNOBS AND (2) TT410-101 KNOBS FOR OTHER SYS DETAILS SEE: 33-11-51-17 33-11-03-03 33-13-01-02 33-42-01-04	108120	1
- 400	233N3214-31	..PANEL ASSY- SUPPLIER CODE: V89954 COMPONENT MAINT MANUAL REF: 33-11-71 QUALIFIED I/W DATA: THE 233N3214-300 PANEL ASSY IS I/W THE 233N3214-31 PANEL ASSY T/W THE S233T100-6003 LIGHTPLATE AND (2) RC445-131 KNOBS AND (2) TT410-101 KNOBS	108120	RF
405	NAS514P632-5	...SCREW	108120	3
410	BACS12HN06-5	...SCREW-	108120	3
415	BACW10EC06S	...WASHER-	108120	3
420	69B46200-14	...STANDOFF	108120	3

MISSING ITEM NUMBERS NOT APPLICABLE

- ITEM NOT ILLUSTRATED

BOEING PROPRIETARY - Copyright © - Unpublished Work - See title page for details.

FIG ITEM	PART NUMBER	1 2 3 4 5 6 7 NOMENCLATURE	EFFECT FROM TO	UNITS PER ASSY
65				
425	233N3250-34	...BRACKET	108120	1
430	233N3214-16	...BASEPLATE ASSY- SUPPLIER CODE: V89954	108120	1
435	PFSC35-38ASEMB	....STUD ASSY- SUPPLIER CODE: V72794 SPECIFICATION NUMBER: BACS21DX1B	108120	3
440	SF6G6CBB5D	....NUT SUPPLIER CODE: V12324 SPECIFICATION NUMBER: BACN10PA06-6	108120	3
445	233N3214-17	....BASEPLATE- SUPPLIER CODE: V89954	108120	1
447	BACP10U0337T	.PANEL ASSY	108120	1
450	233T3210-300	.PANEL ASSY-EMER LIGHTS PASS. OXY SUPPLIER CODE: V89954 ELECTRICAL EQUIP NUMBER: M00043 COMPONENT MAINT MANUAL REF: 33-51-03 QUALIFIED I/W DATA: THE 233T3210-300 PANEL ASSY IS I/W THE 233T3210-28 PANEL ASSY T/W THE S233T100-1077 LIGHTPLATE. PRE ALERT SB: 33A0044 FOR OTHER SYS DETAILS SEE: 33-13-01-02 33-51-08-05 35-21-51-04	108120	1

MISSING ITEM NUMBERS NOT APPLICABLE

– ITEM NOT ILLUSTRATED

BOEING PROPRIETARY - Copyright © - Unpublished Work - See title page for details.

FIG ITEM	PART NUMBER	1 2 3 4 5 6 7 NOMENCLATURE	EFFECT FROM TO	UNITS PER ASSY
65				
450	233T3210-1300	.PANEL ASSY-EMER LIGHTS PASS. OXY SUPPLIER CODE: V89954 ELECTRICAL EQUIP NUMBER: M00043 COMPONENT MAINT MANUAL REF: 33-51-03 POST ALERT SB: 33A0044 FOR OTHER SYS DETAILS SEE: 33-13-01-02 33-51-08-05 35-21-51-04	108120	1
450	233T3210-306	.PANEL ASSY-EMER LIGHTS PASS. OXY SUPPLIER CODE: V89954 ELECTRICAL EQUIP NUMBER: M00043 COMPONENT MAINT MANUAL REF: 33-51-03 FOR OTHER SYS DETAILS SEE: 33-13-01-02 33-51-08-05 35-21-51-04	108120	1
- 455	233T3210-28	..PANEL ASSY- SUPPLIER CODE: V89954 COMPONENT MAINT MANUAL REF: 33-51-03 QUALIFIED I/W DATA: THE 233T3210-300 PANEL ASSY IS I/W THE 233T3210-28 PANEL ASSY T/W THE S233T100-1077 LIGHTPLATE. USED ON: 233T3210-300 PRE ALERT SB: 33A0044	108120	RF
- 455	233T3210-42	..PANEL ASSY- SUPPLIER CODE: V89954 COMPONENT MAINT MANUAL REF: 33-51-03 USED ON: 233T3210-306	108120	RF

MISSING ITEM NUMBERS NOT APPLICABLE

- ITEM NOT ILLUSTRATED

BOEING PROPRIETARY - Copyright © - Unpublished Work - See title page for details.

FIG ITEM	PART NUMBER	1 2 3 4 5 6 7 NOMENCLATURE	EFFECT FROM TO	UNITS PER ASSY
65				
- 455	233T3210-1028	..PANEL ASSY-	108120	RF
		SUPPLIER CODE:		
		V89954		
		COMPONENT MAINT MANUAL REF:		
		33-51-03		
		USED ON:		
		233T3210-1300		
		POST ALERT SB:		
		33A0044		
460	NAS514P632-5	...SCREW-	108120	3
		USED ON:		
		233T3210-28		
		233T3210-1028		
460	FH6C5CPL12BN	...SCREW-	108120	3
		SUPPLIER CODE:		
		V12324		
		USED ON:		
		233T3210-42		
465	NAS1801-06-5	...SCREW-	108120	3
		USED ON:		
		233T3210-28		
		233T3210-1028		
465	BACS12CK06U5	...SCREW-	108120	3
		USED ON:		
		233T3210-42		
470	MS35338-41	...WASHER-	108120	3
		USED ON:		
		233T3210-28		
		233T3210-1028		
470	BACW10EC06C	...WASHER-	108120	3
		USED ON:		
		233T3210-42		
475	69B46200-10	...STANDOFF	108120	3
480	233T6200-82	...BRACKET	108120	1
485	233T3210-17	...BASEPLATE ASSY-	108120	1
		SUPPLIER CODE:		
		V89954		
490	BACS21DD1B	....STUD ASSY	108120	4
		SUPPLIER CODE:		
		V08524		
		SPECIFICATION NUMBER:		
		BACS21DD1B		
495	SF6G6CBB5D	....NUT	108120	2
		SUPPLIER CODE:		
		V12324		
		SPECIFICATION NUMBER:		
		BACN10PA06-6		
500	BACP10U0225N	....PANEL	108120	1

MISSING ITEM NUMBERS NOT APPLICABLE

- ITEM NOT ILLUSTRATED

BOEING PROPRIETARY - Copyright © - Unpublished Work - See title page for details.

FIG ITEM	PART NUMBER	1 2 3 4 5 6 7 NOMENCLATURE	EFFECT FROM TO	UNITS PER ASSY
65				
505	233N3223-300	.PANEL ASSY-ENG START/RAT SUPPLIER CODE: V89954 ELECTRICAL EQUIP NUMBER: M10468 COMPONENT MAINT MANUAL REF: 31-12-01 QUALIFIED I/W DATA: THE 233N3223-300 PANEL ASSY IS I/W THE 233N3223-39 PANEL ASSY T/W THE S233T100-6046 LIGHTPLATE AND (3) BP248-127 KNOBS. OPTIONAL PART: 233N3223-301 V89954 PRE ALERT SB: 33A0044 FOR OTHER SYS DETAILS SEE: 29-21-54-03 33-13-01-02 73-21-52-02 74-31-51-05 80-11-09-02	108120	1

MISSING ITEM NUMBERS NOT APPLICABLE

— ITEM NOT ILLUSTRATED

BOEING PROPRIETARY - Copyright © - Unpublished Work - See title page for details.

FIG ITEM	PART NUMBER	1 2 3 4 5 6 7 NOMENCLATURE	EFFECT FROM TO	UNITS PER ASSY
65				
505	233N3223-301	.PANEL ASSY-ENG START/RAT SUPPLIER CODE: V89954 ELECTRICAL EQUIP NUMBER: M10468 COMPONENT MAINT MANUAL REF: 31-12-01 QUALIFIED I/W DATA: THE 233N3223-301 PANEL ASSY IS I/W THE 233N3223-40 PANEL ASSY T/W THE S233T100-6046 LIGHTPLATE AND (3) BP248-127 KNOBS. OPTIONAL PART: 233N3223-300 V89954 PRE ALERT SB: 33A0044 FOR OTHER SYS DETAILS SEE: 29-21-54-03 33-13-01-02 73-21-52-02 74-31-51-05 80-11-09-02	108120	1
505	233N3223-1301	.PANEL ASSY-ENG START/RAT SUPPLIER CODE: V89954 ELECTRICAL EQUIP NUMBER: M10468 COMPONENT MAINT MANUAL REF: 31-12-01 OPTIONAL PART: 233N3223-1300 V89954 POST ALERT SB: 33A0044 FOR OTHER SYS DETAILS SEE: 29-21-54-03 33-13-01-02 73-21-52-02 74-31-51-05 80-11-09-02	108120	1

MISSING ITEM NUMBERS NOT APPLICABLE

— ITEM NOT ILLUSTRATED

BOEING PROPRIETARY - Copyright © - Unpublished Work - See title page for details.

FIG ITEM	PART NUMBER	1 2 3 4 5 6 7 NOMENCLATURE	EFFECT FROM TO	UNITS PER ASSY
65				
505	233N3223-343	.PANEL ASSY-ENG START/RAT SUPPLIER CODE: V89954 ELECTRICAL EQUIP NUMBER: M10468 FOR OTHER SYS DETAILS SEE: 29-21-54-03 33-13-01-02 73-21-52-02 74-31-51-05 80-11-09-02	108120	1
505	233N3223-1300	.PANEL ASSY-ENG START/RAT SUPPLIER CODE: V89954 ELECTRICAL EQUIP NUMBER: M10468 COMPONENT MAINT MANUAL REF: 31-12-01 OPTIONAL PART: 233N3223-1301 V89954 POST ALERT SB: 33A0044 FOR OTHER SYS DETAILS SEE: 29-21-54-03 33-13-01-02 73-21-52-02 74-31-51-05 80-11-09-02	108120	1
- 510	233N3223-39	..PANEL ASSY- SUPPLIER CODE: V89954 MISCELLANEOUS DATA: FOR SPARES PROCURE NEXT HIGHER ASSY COMPONENT MAINT MANUAL REF: 31-12-01 QUALIFIED I/W DATA: THE 233N3223-300 PANEL ASSY IS I/W THE 233N3223-39 PANEL ASSY T/W THE S233T100-6046 LIGHTPLATE AND (3) BP248-127 KNOBS. USED ON: 233N3223-300 PRE ALERT SB: 33A0044	108120	RF

MISSING ITEM NUMBERS NOT APPLICABLE

- ITEM NOT ILLUSTRATED

BOEING PROPRIETARY - Copyright © - Unpublished Work - See title page for details.

FIG ITEM	PART NUMBER	1 2 3 4 5 6 7 NOMENCLATURE	EFFECT FROM TO	UNITS PER ASSY
65				
- 510	233N3223-40	..PANEL ASSY- SUPPLIER CODE: V89954 MISCELLANEOUS DATA: FOR SPARES PROCURE NEXT HIGHER ASSY COMPONENT MAINT MANUAL REF: 31-12-01 QUALIFIED I/W DATA: THE 233N3223-301 PANEL ASSY IS I/W THE 233N3223-40 PANEL ASSY T/W THE S233T100-6046 LIGHTPLATE AND (3) BP248-127 KNOBS. USED ON: 233N3223-301 PRE ALERT SB: 33A0044	108120	RF
- 510	233N3223-53	..PANEL ASSY- SUPPLIER CODE: V89954 MISCELLANEOUS DATA: FOR SPARES PROCURE NEXT HIGHER ASSY COMPONENT MAINT MANUAL REF: 31-12-01 USED ON: 233N3223-343	108120	RF
- 510	233N3223-1039	..PANEL ASSY- SUPPLIER CODE: V89954 COMPONENT MAINT MANUAL REF: 31-12-01 USED ON: 233N3223-1300 POST ALERT SB: 33A0044	108120	RF
- 510	233N3223-1040	..PANEL ASSY- SUPPLIER CODE: V89954 COMPONENT MAINT MANUAL REF: 31-12-01 USED ON: 233N3223-1301 POST ALERT SB: 33A0044	108120	RF
515	NAS514P632-5	...SCREW	108120	3

MISSING ITEM NUMBERS NOT APPLICABLE

- ITEM NOT ILLUSTRATED

BOEING PROPRIETARY - Copyright © - Unpublished Work - See title page for details.

FIG ITEM	PART NUMBER	1 2 3 4 5 6 7 NOMENCLATURE	EFFECT FROM TO	UNITS PER ASSY
65				
520	NAS1801-06-5	...SCREW-	108120	3
		USED ON:		
		233N3223-39		
		233N3223-40		
		233N3223-1039		
		233N3223-1040		
520	BACS12HN06-5	...SCREW-	108120	3
		OPTIONAL PART:		
		NAS1801-06-5		
		USED ON:		
		233N3223-53		
520	NAS1801-06-5	...SCREW-	108120	3
		OPTIONAL PART:		
		BACS12HN06-5		
		USED ON:		
		233N3223-53		
525	MS35338-41	...WASHER-	108120	3
		USED ON:		
		233N3223-39		
		233N3223-40		
		233N3223-1039		
		233N3223-1040		
525	BACW10EC06CD	...WASHER-	108120	3
		USED ON:		
		233N3223-53		
530	69B46200-13	...STANDOFF	108120	3
535	233N3223-35	...BRACKET ASSY-	108120	1
		SUPPLIER CODE:		
		V89954		
540	233N3223-8	...BASEPLATE ASSY-	108120	1
		SUPPLIER CODE:		
		V89954		
545	PFSC35-38ASEMB	....STUD ASSY-	108120	4
		SUPPLIER CODE:		
		V72794		
		SPECIFICATION NUMBER:		
		BACS21DX1B		
550	SF6G6CBB5D	....NUT	108120	4
		SUPPLIER CODE:		
		V12324		
		SPECIFICATION NUMBER:		
		BACN10PA06-6		
555	233N3223-9	....BASEPLATE-	108120	1
		SUPPLIER CODE:		
		V89954		

MISSING ITEM NUMBERS NOT APPLICABLE

– ITEM NOT ILLUSTRATED

BOEING PROPRIETARY - Copyright © - Unpublished Work - See title page for details.

FIG ITEM	PART NUMBER	1 2 3 4 5 6 7 NOMENCLATURE	EFFECT FROM TO	UNITS PER ASSY
65				
560	233N3206-300	.PANEL ASSY-FUEL CONT SUPPLIER CODE: V89954 ELECTRICAL EQUIP NUMBER: M10055 COMPONENT MAINT MANUAL REF: 28-41-71 QUALIFIED I/W DATA: THE 233N3206-300 PANEL ASSY IS I/W THE 233N3206-19 PANEL ASSY T/W THE S233T100-1106 LIGHTPLATE PRE ALERT SB: 28A0105R1 PRE COMPONENT SB: 233N3206-28-03 FOR OTHER SYS DETAILS SEE: 28-22-51-02 28-41-51-03 33-13-01-02	108120	1
560	233N3206-3300	.PANEL ASSY-FUEL CONT SUPPLIER CODE: V89954 ELECTRICAL EQUIP NUMBER: M10055 COMPONENT MAINT MANUAL REF: 28-41-71 POST ALERT SB: 28A0105R1 POST COMPONENT SB: 233N3206-28-03 FOR OTHER SYS DETAILS SEE: 28-22-51-02 28-41-51-03 33-13-01-02	108120	1

MISSING ITEM NUMBERS NOT APPLICABLE

– ITEM NOT ILLUSTRATED

BOEING PROPRIETARY - Copyright © - Unpublished Work - See title page for details.

FIG ITEM	PART NUMBER	1 2 3 4 5 6 7 NOMENCLATURE	EFFECT FROM TO	UNITS PER ASSY
65				
- 565	233N3206-19	..PANEL ASSY- SUPPLIER CODE: V89954 COMPONENT MAINT MANUAL REF: 28-41-71 QUALIFIED I/W DATA: THE 233N3206-300 PANEL ASSY IS I/W THE 233N3206-19 PANEL ASSY T/W THE S233T100-1106 LIGHTPLATE PRE ALERT SB: 28A0105R1 PRE COMPONENT SB: 233N3206-28-03	108120	RF
- 565	233N3206-3019	..PANEL ASSY- SUPPLIER CODE: V89954 COMPONENT MAINT MANUAL REF: 28-41-71 POST ALERT SB: 28A0105R1 POST COMPONENT SB: 233N3206-28-03	108120	RF
570	NAS514P632-5	...SCREW	108120	4
575	BACS12HN06-5	...SCREW-	108120	4
580	BACW10EC06S	...WASHER-	108120	4
585	69B46200-11	...STANDOFF	108120	4
590	233N3250-64	...BRACKET	108120	1
595	233T3235-18	...BASEPLATE ASSY- SUPPLIER CODE: V89954	108120	1
600	PFSC35-38ASEMB	....STUD ASSY SUPPLIER CODE: V72794 SPECIFICATION NUMBER: BACS21DX1B	108120	4
605	SF6G6CBB5D	....NUT- SUPPLIER CODE: V12324	108120	4
610	BACP10U0412N	....BASEPLATE	108120	1

MISSING ITEM NUMBERS NOT APPLICABLE

- ITEM NOT ILLUSTRATED

BOEING PROPRIETARY - Copyright © - Unpublished Work - See title page for details.

FIG ITEM	PART NUMBER	1 2 3 4 5 6 7 NOMENCLATURE	EFFECT FROM TO	UNITS PER ASSY
65				
615	10080-0101	.INDICATOR ASSY-FUEL QTY SUPPLIER CODE: V89305 SPECIFICATION NUMBER: S345N001-001 ELECTRICAL EQUIP NUMBER: M10054 COMPONENT MAINT MANUAL REF: 28-42-08 OPTIONAL PART: 10080-0201 V89305 FOR BREAKDOWN SEE: 28-41-04-01	108120	RF
615	10080-0201	.INDICATOR ASSY-FUEL QTY SUPPLIER CODE: V89305 FUNCTIONAL DESCRIPTION: MODULE DISPLAYS INDIVIDUAL TANK QUANTITY, TOTAL QUANTITY & TEMPERATURE OF MAIN TANK SPECIFICATION NUMBER: S345N001-001 ELECTRICAL EQUIP NUMBER: M10054 COMPONENT MAINT MANUAL REF: 28-42-08 OPTIONAL PART: 10080-0101 V89305 FOR BREAKDOWN SEE: 28-41-04-01	108120	RF

MISSING ITEM NUMBERS NOT APPLICABLE

– ITEM NOT ILLUSTRATED

BOEING PROPRIETARY - Copyright © - Unpublished Work - See title page for details.

FIG ITEM	PART NUMBER	1 2 3 4 5 6 7 NOMENCLATURE	EFFECT FROM TO	UNITS PER ASSY
65				
620	233N3204-300	.PANEL ASSY-ANTI-ICE SUPPLIER CODE: V89954 ELECTRICAL EQUIP NUMBER: M10397 COMPONENT MAINT MANUAL REF: 30-11-72 QUALIFIED I/W DATA: 233N3204-300 PANEL ASSY IS I/W 233N3204-19 PANEL ASSY T/W S233T100-1070 LIGHTPLATE OPTIONAL PART: 233N3204-301 V89954 PRE ALERT SB: 33A0044 FOR OTHER SYS DETAILS SEE: 30-11-51-03 30-21-51-03 33-13-01-02	108120	1
620	233N3204-301	.PANEL ASSY-ANTI-ICE SUPPLIER CODE: V89954 ELECTRICAL EQUIP NUMBER: M10397 COMPONENT MAINT MANUAL REF: 30-11-72 QUALIFIED I/W DATA: 233N3204-301 PANEL ASSY IS I/W 233N3204-20 PANEL ASSY T/W S233T100-1070 LIGHTPLATE OPTIONAL PART: 233N3204-300 V89954 PRE ALERT SB: 33A0044 FOR OTHER SYS DETAILS SEE: 30-11-51-03 30-21-51-03 33-13-01-02	108120	1

MISSING ITEM NUMBERS NOT APPLICABLE

– ITEM NOT ILLUSTRATED

BOEING PROPRIETARY - Copyright © - Unpublished Work - See title page for details.

FIG ITEM	PART NUMBER	1 2 3 4 5 6 7 NOMENCLATURE	EFFECT FROM TO	UNITS PER ASSY
65				
620	233N3204-1301	.PANEL ASSY-ANTI-ICE SUPPLIER CODE: V89954 ELECTRICAL EQUIP NUMBER: M10397 COMPONENT MAINT MANUAL REF: 30-11-72 POST ALERT SB: 33A0044 FOR OTHER SYS DETAILS SEE: 30-11-51-03 30-21-51-03 33-13-01-02	108120	1
620	233N3204-1300	.PANEL ASSY-ANTI-ICE SUPPLIER CODE: V89954 ELECTRICAL EQUIP NUMBER: M10397 COMPONENT MAINT MANUAL REF: 30-11-72 POST ALERT SB: 33A0044 FOR OTHER SYS DETAILS SEE: 30-11-51-03 30-21-51-03 33-13-01-02	108120	1
620	233N3204-332	.PANEL ASSY-ANTI-ICE SUPPLIER CODE: V89954 ELECTRICAL EQUIP NUMBER: M10397 COMPONENT MAINT MANUAL REF: 30-11-72 FOR OTHER SYS DETAILS SEE: 30-11-51-03 30-21-51-03 33-13-01-02	108120	1

MISSING ITEM NUMBERS NOT APPLICABLE

– ITEM NOT ILLUSTRATED

BOEING PROPRIETARY - Copyright © - Unpublished Work - See title page for details.

FIG ITEM	PART NUMBER	1 2 3 4 5 6 7 NOMENCLATURE	EFFECT FROM TO	UNITS PER ASSY
65				
- 625	233N3204-19	..PANEL ASSY- SUPPLIER CODE: V89954 COMPONENT MAINT MANUAL REF: 30-11-72 QUALIFIED I/W DATA: 233N3204-300 PANEL ASSY IS I/W 233N3204-19 PANEL ASSY T/W S233T100-1070 LIGHTPLATE USED ON: 233N3204-300 PRE ALERT SB: 33A0044	108120	RF
- 625	233N3204-20	..PANEL ASSY- SUPPLIER CODE: V89954 COMPONENT MAINT MANUAL REF: 30-11-72 QUALIFIED I/W DATA: 233N3204-301 PANEL ASSY IS I/W 233N3204-20 PANEL ASSY T/W S233T100-1070 LIGHTPLATE USED ON: 233N3204-301 PRE ALERT SB: 33A0044	108120	RF
- 625	233N3204-1020	..PANEL ASSY- SUPPLIER CODE: V89954 COMPONENT MAINT MANUAL REF: 30-11-72 USED ON: 233N3204-1301 POST ALERT SB: 33A0044	108120	RF
- 625	233N3204-1019	..PANEL ASSY- SUPPLIER CODE: V89954 COMPONENT MAINT MANUAL REF: 30-11-72 USED ON: 233N3204-1300 POST ALERT SB: 33A0044	108120	RF

MISSING ITEM NUMBERS NOT APPLICABLE

- ITEM NOT ILLUSTRATED

BOEING PROPRIETARY - Copyright © - Unpublished Work - See title page for details.

FIG ITEM	PART NUMBER	1 2 3 4 5 6 7 NOMENCLATURE	EFFECT FROM TO	UNITS PER ASSY
65				
- 625	233N3204-36	..PANEL ASSY-	108120	RF
		SUPPLIER CODE:		
		V89954		
		COMPONENT MAINT MANUAL REF:		
		30-11-72		
		USED ON:		
		233N3204-332		
630	NAS514P632-5	...SCREW	108120	3
635	NAS1801-06-5	...SCREW-	108120	3
		USED ON:		
		233N3204-19		
		233N3204-20		
		233N3204-1019		
		233N3204-1020		
635	BACS12HN06-5	...SCREW-	108120	3
		USED ON:		
		233N3204-36		
640	MS35338-41	...WASHER-	108120	3
		USED ON:		
		233N3204-19		
		233N3204-20		
		233N3204-1019		
		233N3204-1020		
640	BACW10EC06S	...WASHER-	108120	3
		USED ON:		
		233N3204-36		
645	69B46200-11	...STANDOFF-	108120	3
650	233N3250-56	...BRACKET-	108120	1
655	233N3204-7	...BASEPLATE ASSY-	108120	1
		SUPPLIER CODE:		
		V89954		
660	PFSC35-38ASEMB	....STUD ASSY-	108120	4
		SUPPLIER CODE:		
		V72794		
		SPECIFICATION NUMBER:		
		BACS21DX1B		
665	SF6G6CBB5D	....NUT	108120	2
		SUPPLIER CODE:		
		V12324		
		SPECIFICATION NUMBER:		
		BACN10PA06-6		
670	233N3204-8	....BASEPLATE-	108120	1
		SUPPLIER CODE:		
		V89954		

MISSING ITEM NUMBERS NOT APPLICABLE

- ITEM NOT ILLUSTRATED

BOEING PROPRIETARY - Copyright © - Unpublished Work - See title page for details.

FIG ITEM	PART NUMBER	1 2 3 4 5 6 7 NOMENCLATURE	EFFECT FROM TO	UNITS PER ASSY
65				
675	233N3201-303	.PANEL ASSY-WSHLD CLEARANCE SUPPLIER CODE: V89954 ELECTRICAL EQUIP NUMBER: M10023 COMPONENT MAINT MANUAL REF: 30-42-01 FOR OTHER SYS DETAILS SEE: 30-42-51-03 33-13-01-02	108120	1
- 680	233N3201-16	..PANEL ASSY- SUPPLIER CODE: V89954 COMPONENT MAINT MANUAL REF: 30-42-01	108120	RF
685	NAS514P632-5	...SCREW	108120	3
690	NAS1801-6-5	...SCREW	108120	3
695	MS35338-41	...WASHER	108120	3
700	69B46200-5	...STANDOFF	108120	3
705	233N3250-6	...BRACKET-CONN.	108120	1
710	233N3201-8	...BASEPLATE ASSY- SUPPLIER CODE: V89954	108120	1
715	BACS21DD1B	....STUD ASSY SUPPLIER CODE: V08524 SPECIFICATION NUMBER: BACS21DD1B	108120	4
720	SF6G6CBB5D	....NUT SUPPLIER CODE: V12324 SPECIFICATION NUMBER: BACN10PA06-6	108120	3
725	BACP10U0262N	....BASEPLATE	108120	1

MISSING ITEM NUMBERS NOT APPLICABLE

- ITEM NOT ILLUSTRATED

BOEING PROPRIETARY - Copyright © - Unpublished Work - See title page for details.

FIG ITEM	PART NUMBER	1 2 3 4 5 6 7 NOMENCLATURE	EFFECT FROM TO	UNITS PER ASSY
65				
730	233N3210-300	.PANEL ASSY-ANTI-COLLISION LIGHTING SUPPLIER CODE: V89954 ELECTRICAL EQUIP NUMBER: M10396 COMPONENT MAINT MANUAL REF: 33-44-71 QUALIFIED I/W DATA: THE 233N3210-300 PANEL ASSY IS I/W THE 233N3210-16 PANEL ASSY T/W THE S233T100-6030 LIGHTPLATE FOR OTHER SYS DETAILS SEE: 33-13-01-02 33-41-52-04 33-42-52-04 33-43-51-04 33-44-51-05	108120	1
- 735	233N3210-16	..PANEL ASSY- SUPPLIER CODE: V89954 COMPONENT MAINT MANUAL REF: 33-44-71 QUALIFIED I/W DATA: THE 233N3210-300 PANEL ASSY IS I/W THE 233N3210-16 PANEL ASSY T/W THE S233T100-6030 LIGHTPLATE	108120	RF
740	NAS514P632-5	...SCREW	108120	4
745	BACS12HN06-5	...SCREW- OPTIONAL PART: NAS1801-06-5	108120	4
745	NAS1801-06-5	...SCREW- OPTIONAL PART: BACS12HN06-5	108120	4
750	NAS620-6	...WASHER	108120	8
755	BACW10EC06S	...WASHER-	108120	4
760	233N3250-41	...BRACKET	108120	1
765	69B46200-5	...STANDOFF	108120	2
770	233T6200-66	...STANDOFF	108120	2
775	233N3210-7	...BASEPLATE ASSY- SUPPLIER CODE: V89954	108120	1

MISSING ITEM NUMBERS NOT APPLICABLE

- ITEM NOT ILLUSTRATED

BOEING PROPRIETARY - Copyright © - Unpublished Work - See title page for details.

FIG ITEM	PART NUMBER	1 2 3 4 5 6 7 NOMENCLATURE	EFFECT FROM TO	UNITS PER ASSY
65				
780	BACS21DD1B	....STUD ASSY SUPPLIER CODE: V08524 SPECIFICATION NUMBER: BACS21DD1B	108120	4
785	SF6G6CBB5D	....NUT SUPPLIER CODE: V12324 SPECIFICATION NUMBER: BACN10PA06-6	108120	4
790	233N3210-8	....BASEPLATE- SUPPLIER CODE: V89954	108120	1
795	233T3200-2	.PANEL ASSY	108120	1
800	BACS21DD1B	..STUD ASSY SUPPLIER CODE: V08524 SPECIFICATION NUMBER: BACS21DD1B	108120	3
801	233T3200-4	..BASEPLATE	108120	1

MISSING ITEM NUMBERS NOT APPLICABLE

– ITEM NOT ILLUSTRATED

BOEING PROPRIETARY - Copyright © - Unpublished Work - See title page for details.

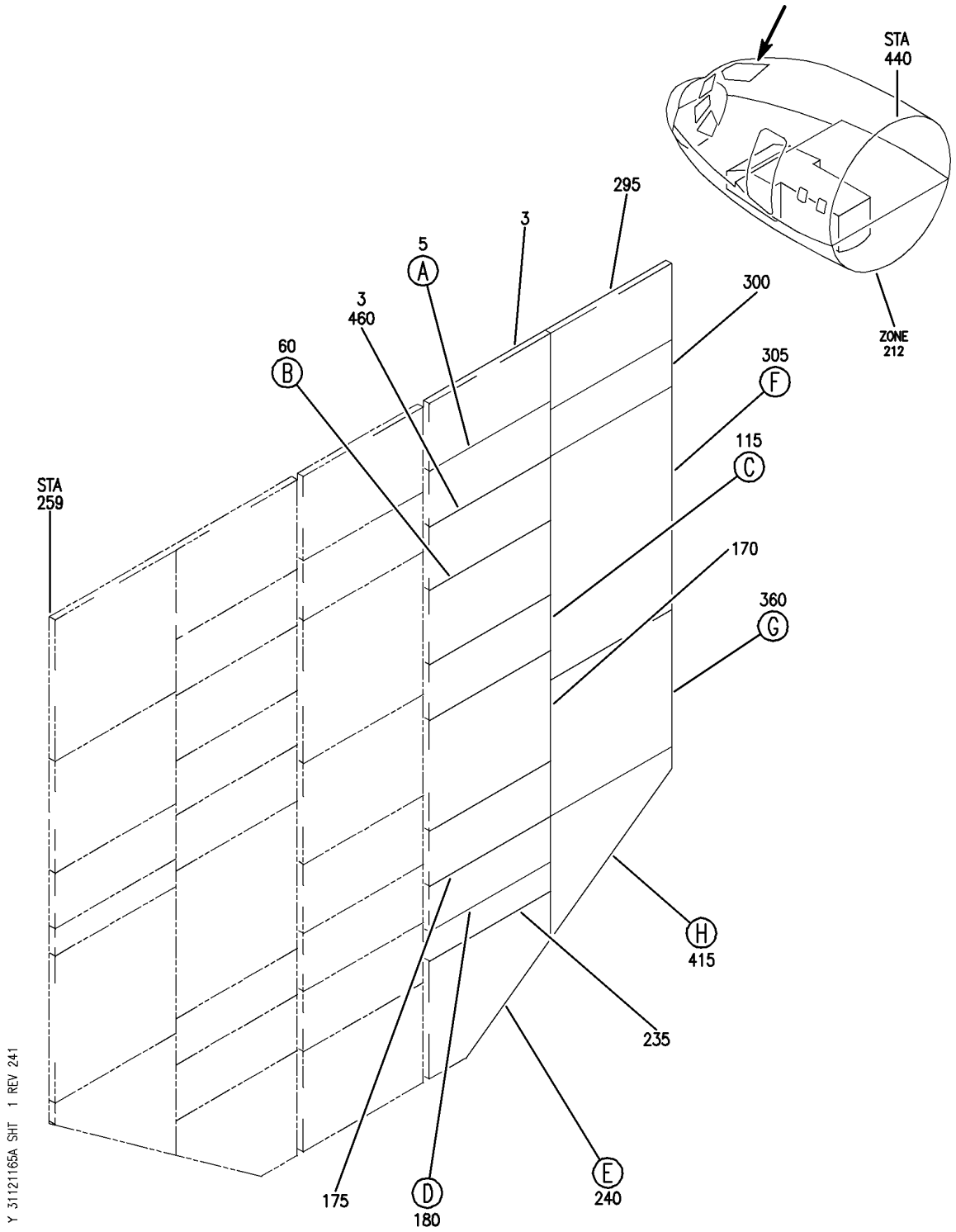

PANEL INSTL-P5 OVHD (INDICATING/RECORDING SYSTEMS ONLY)
FIGURE 65A (SHEET 1)

BOEING PROPRIETARY - Copyright © - Unpublished Work - See title page for details.

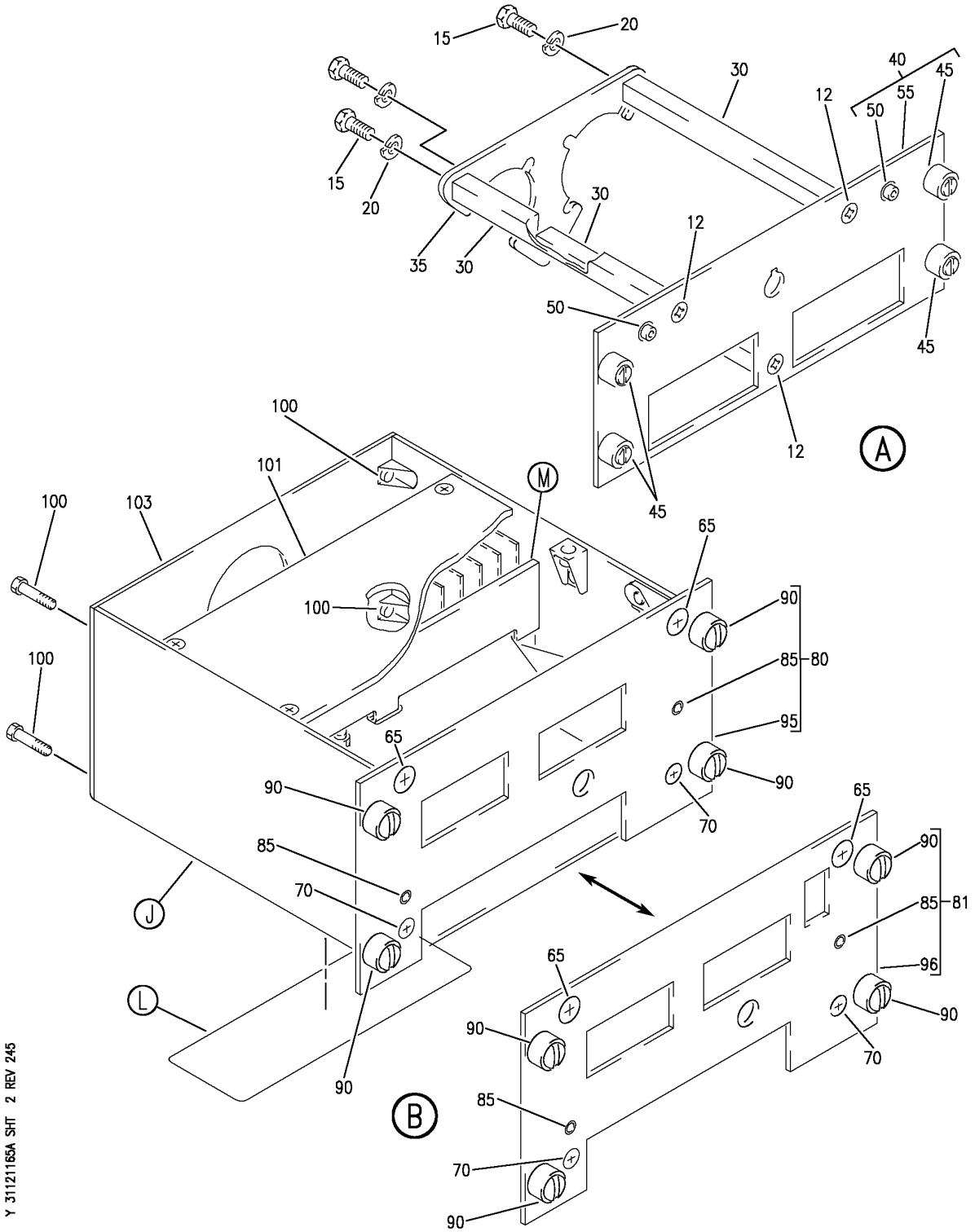

PANEL INSTL-P5 OVHD (INDICATING/RECORDING SYSTEMS ONLY)
FIGURE 65A (SHEET 2)

BOEING PROPRIETARY - Copyright © - Unpublished Work - See title page for details.

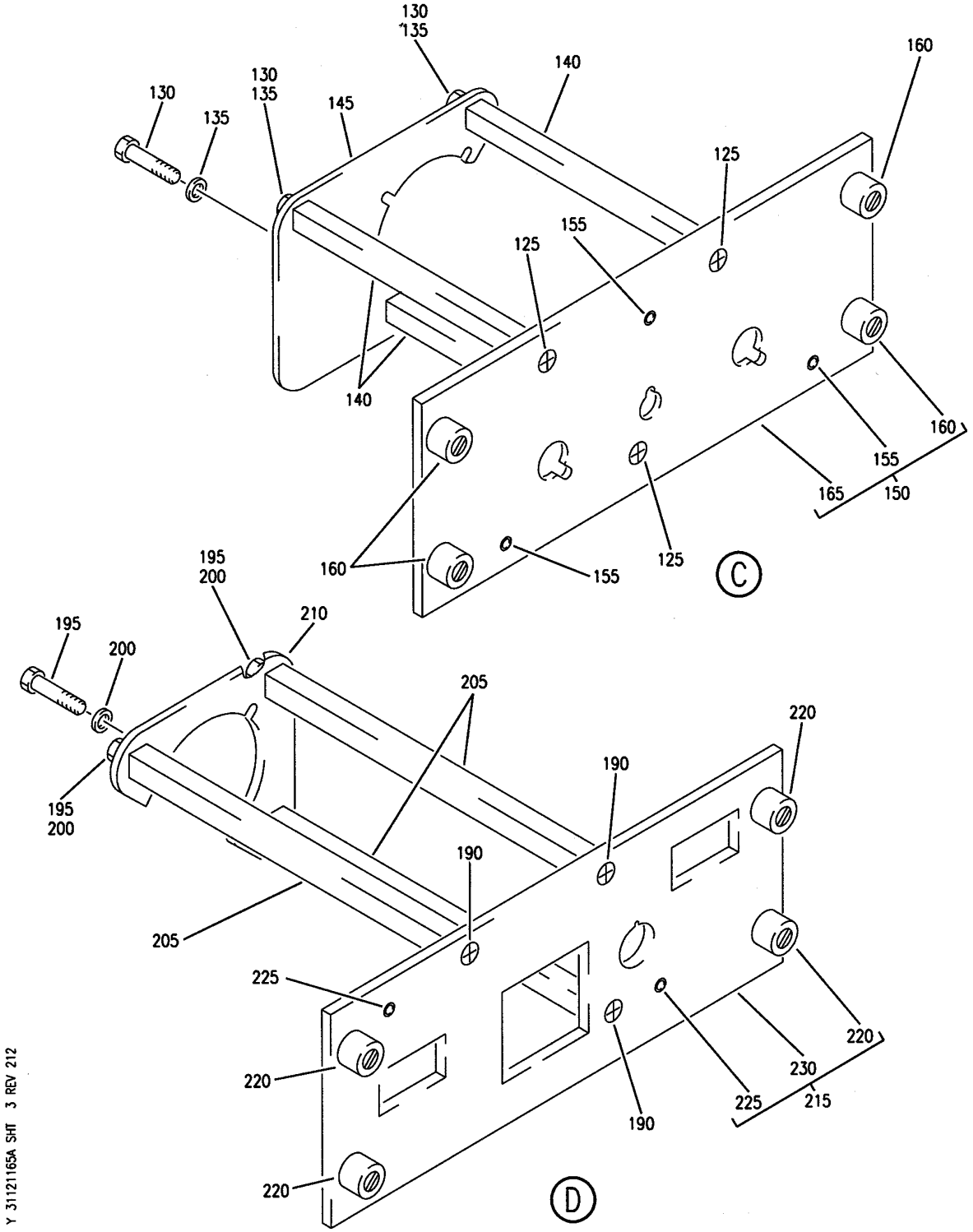

PANEL INSTL-P5 OVHD (INDICATING/RECORDING SYSTEMS ONLY)
FIGURE 65A (SHEET 3)

BOEING PROPRIETARY - Copyright © - Unpublished Work - See title page for details.

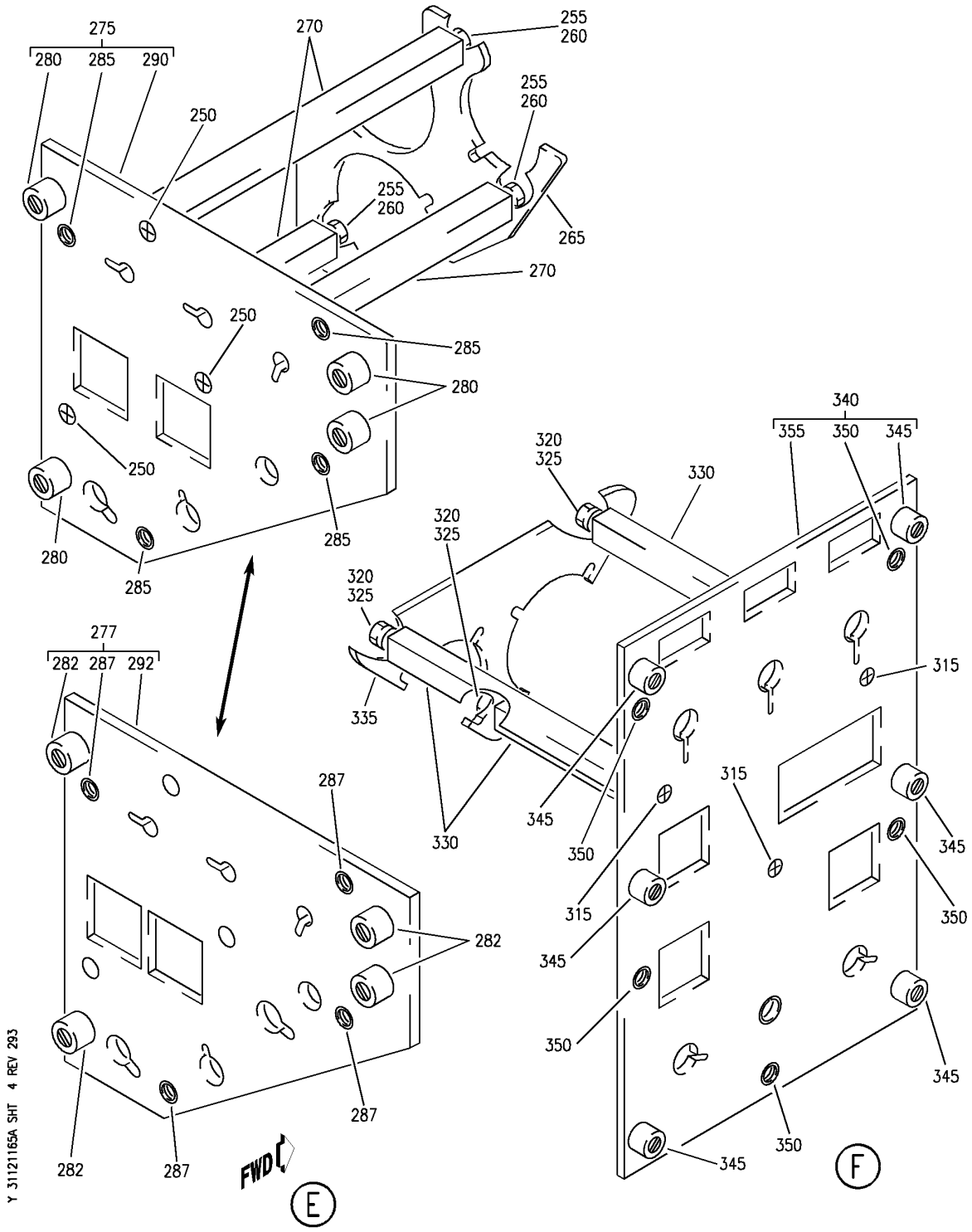

PANEL INSTL-P5 OVHD (INDICATING/RECORDING SYSTEMS ONLY)
FIGURE 65A (SHEET 4)

BOEING PROPRIETARY - Copyright © - Unpublished Work - See title page for details.

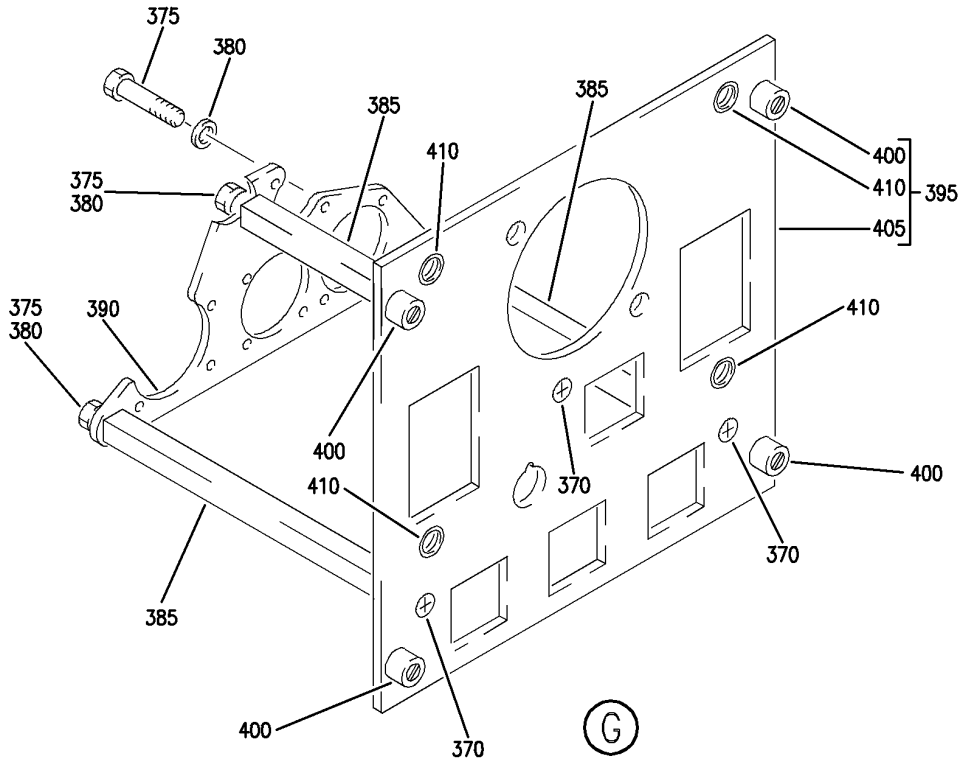

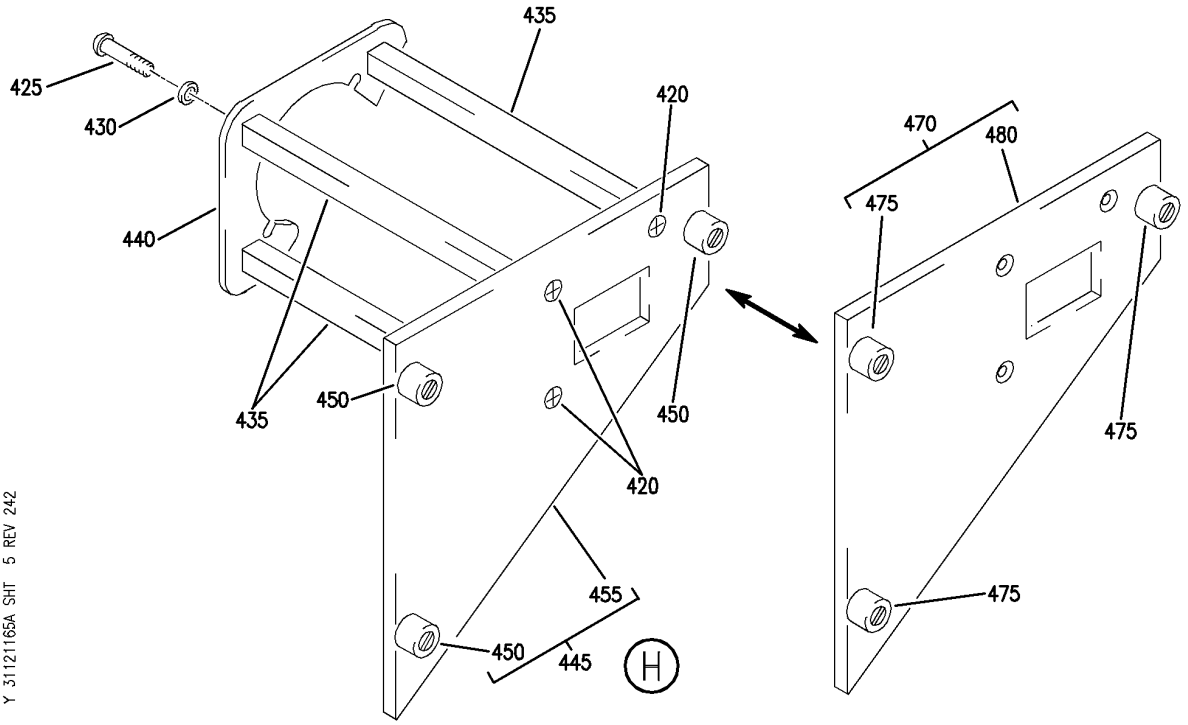

PANEL INSTL-P5 OVHD (INDICATING/RECORDING SYSTEMS ONLY)
FIGURE 65A (SHEET 5)

BOEING PROPRIETARY - Copyright © - Unpublished Work - See title page for details.

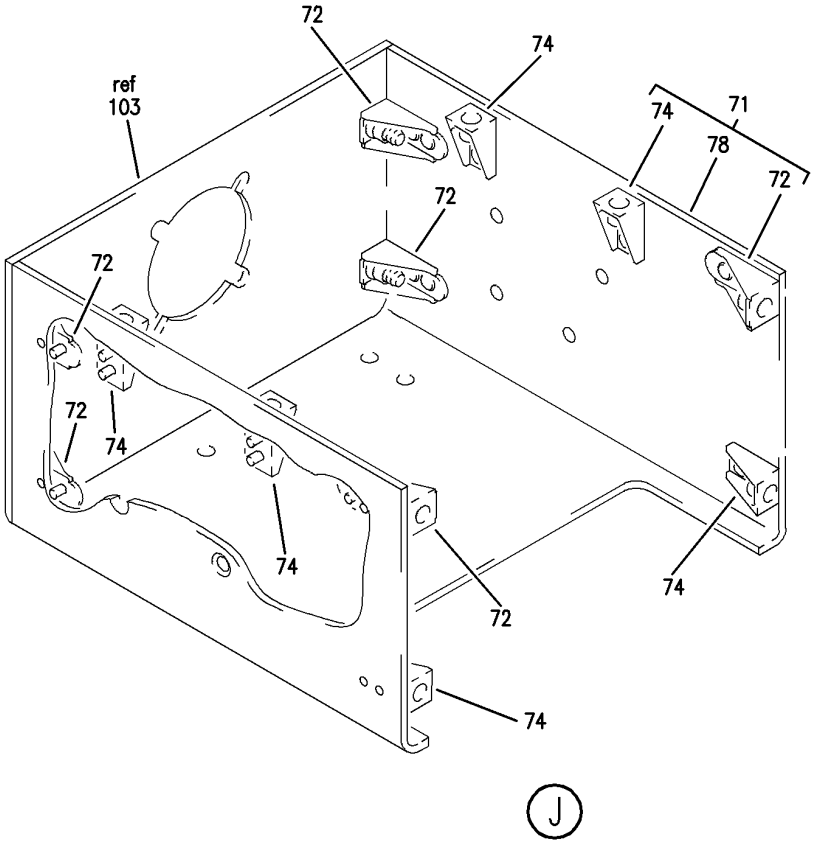

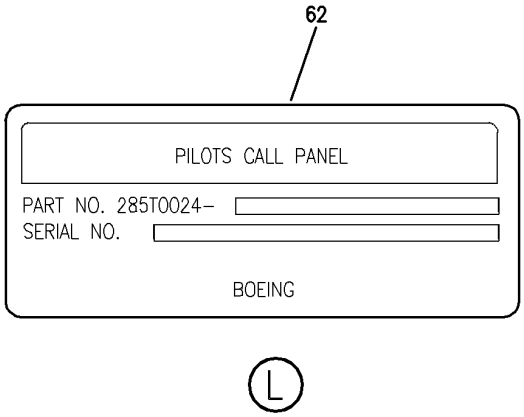

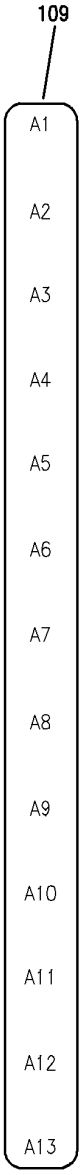

Y 31121165A SHT 6 REV 242

PANEL INSTL-P5 OVHD (INDICATING/RECORDING SYSTEMS ONLY)
FIGURE 65A (SHEET 6)

BOEING PROPRIETARY - Copyright © - Unpublished Work - See title page for details.

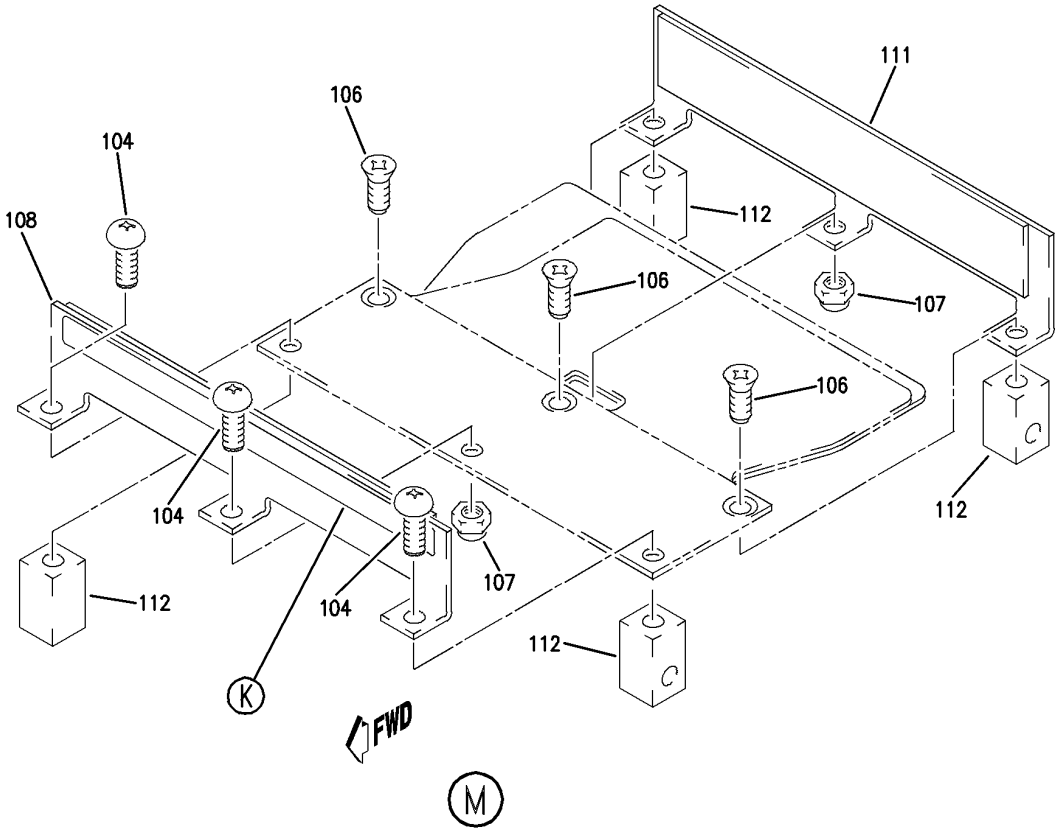

Y 31121165A SHT 7 REV 242

PANEL INSTL-P5 OVHD (INDICATING/RECORDING SYSTEMS ONLY)
FIGURE 65A (SHEET 7)

BOEING PROPRIETARY - Copyright © - Unpublished Work - See title page for details.

FIG ITEM	PART NUMBER	1 2 3 4 5 6 7 NOMENCLATURE	EFFECT FROM TO	UNITS PER ASSY
65A				
		PANEL INSTL-P5 OVHD (INDICATING/RECORDING SYSTEMS ONLY)	108120	
- 1	233N3103-59	PANEL INSTL-P5 OVHD (INDICATING/RECORDING SYSTEMS ONLY) FOR NHA/OTHER SYS DET SEE: 25-10-00-15E	108120	RF
3	BACP10U0262T	.PANEL-	108120	2
5	233N3212-300	.PANEL ASSY-WINDOW HEAT SUPPLIER CODE: V89954 ELECTRICAL EQUIP NUMBER: M10395 COMPONENT MAINT MANUAL REF: 30-41-71 QUALIFIED I/W DATA: THE 233N3212-300 PANEL ASSY IS I/W THE 233N3212-11 PANEL ASSY T/W THE S233T100-1073 LIGHTPLATE OPTIONAL PART: 233N3212-302 V89954 FOR OTHER SYS DETAILS SEE: 30-41-51-03 33-13-01-02	108120	1
5	233N3212-302	.PANEL ASSY-WINDOW HEAT SUPPLIER CODE: V89954 ELECTRICAL EQUIP NUMBER: M10395 COMPONENT MAINT MANUAL REF: 30-41-71 OPTIONAL PART: 233N3212-300 V89954 FOR OTHER SYS DETAILS SEE: 30-41-51-03 33-13-01-02	108120	1

MISSING ITEM NUMBERS NOT APPLICABLE

- ITEM NOT ILLUSTRATED

BOEING PROPRIETARY - Copyright © - Unpublished Work - See title page for details.

FIG ITEM	PART NUMBER	1 2 3 4 5 6 7 NOMENCLATURE	EFFECT FROM TO	UNITS PER ASSY
65A				
- 10	233N3212-11	..PANEL ASSY-	108120	RF
		SUPPLIER CODE:		
		V89954		
		COMPONENT MAINT MANUAL REF:		
		30-41-71		
		QUALIFIED I/W DATA:		
		THE 233N3212-300 PANEL		
		ASSY IS I/W THE		
		233N3212-11 PANEL ASSY		
		T/W THE S233T100-1073		
		LIGHTPLATE		
		USED ON:		
		233N3212-300		
- 10	233N3212-14	..PANEL ASSY-	108120	RF
		SUPPLIER CODE:		
		V89954		
		COMPONENT MAINT MANUAL REF:		
		30-41-71		
		USED ON:		
		233N3212-302		
12	NAS514P632-5	...SCREW	108120	3
15	BACS12HN06-5	...SCREW-	108120	3
		OPTIONAL PART:		
		NAS1801-06-5		
		USED ON:		
		233N3212-14		
15	NAS1801-06-5	...SCREW-	108120	3
		OPTIONAL PART:		
		BACS12HN06-5		
		USED ON:		
		233N3212-14		
15	NAS1801-06-5	...SCREW-	108120	3
		USED ON:		
		233N3212-11		
20	MS35338-41	...WASHER-	108120	3
		USED ON:		
		233N3212-11		
20	BACW10EC06S	...WASHER-	108120	3
		USED ON:		
		233N3212-14		
30	69B46200-12	...STANDOFF	108120	3
35	233N3250-11	...BRACKET	108120	1
40	233N3212-2	...BASEPLATE ASSY-	108120	1
		SUPPLIER CODE:		
		V89954		

MISSING ITEM NUMBERS NOT APPLICABLE

- ITEM NOT ILLUSTRATED

BOEING PROPRIETARY - Copyright © - Unpublished Work - See title page for details.

FIG ITEM	PART NUMBER	1 2 3 4 5 6 7 NOMENCLATURE	EFFECT FROM TO	UNITS PER ASSY
65A				
45	PFSC35-38ASEMB	....STUD ASSY- SUPPLIER CODE: V72794 SPECIFICATION NUMBER: BACS21DX1B	108120	4
50	SF6G6CBB5D	....NUT SUPPLIER CODE: V12324 SPECIFICATION NUMBER: BACN10PA06-6	108120	2
55	233N3212-3	....BASEPLATE- SUPPLIER CODE: V89954	108120	1
60	285T0024-26	.MODULE ASSY-PILOTS CALL PNL SUPPLIER CODE: V89954 ELECTRICAL EQUIP NUMBER: M00051 COMPONENT MAINT MANUAL REF: 23-42-59 FOR OTHER SYS DETAILS SEE: 23-42-02-04 33-13-01-02	108120	1
62	BAC27TEX0933	..MARKER-ALUMINUM FOIL SUPPLIER CODE: V89954	108120	1
65	NAS514P632-5	..SCREW	108120	2
70	NAS514P440-5	..SCREW	108120	2
71	285T0158-23	..BRACKET ASSY- SUPPLIER CODE: V89954	108120	1
72	MF6000-06	...NUTPLATE SUPPLIER CODE: V15653 SPECIFICATION NUMBER: BACN10KJ06 ATTACHING PARTS	108120	6
- 73	BACR15BA3AD	...RIVET- SIZE DETERMINED ON INSTL. -------*-------	108120	12
74	F22A27M22-40	...NUT- SUPPLIER CODE: V0217B ATTACHING PARTS	108120	6
- 77	BACR15BA2AD	...RIVET- SIZE DETERMINED ON INSTL. -------*-------	108120	12

MISSING ITEM NUMBERS NOT APPLICABLE

- ITEM NOT ILLUSTRATED

BOEING PROPRIETARY - Copyright © - Unpublished Work - See title page for details.

FIG ITEM	PART NUMBER	1 2 3 4 5 6 7 NOMENCLATURE	EFFECT FROM TO	UNITS PER ASSY
65A				
78	285T0158-22	...BRACKET-	108120	1
		SUPPLIER CODE:		
		V89954		
81	285T0157-1	..PANEL ASSY-	108120	1
		SUPPLIER CODE:		
		V89954		
85	SF6G6CBB5D	...NUT	108120	2
		SUPPLIER CODE:		
		V12324		
		SPECIFICATION NUMBER:		
		BACN10PA06-6		
90	PFSC35-38ASEMB	...STUD ASSY	108120	4
		SUPPLIER CODE:		
		V72794		
		SPECIFICATION NUMBER:		
		BACS21DX1B		
96	285T0157-8	...PANEL-	108120	1
		SUPPLIER CODE:		
		V89954		
		ALTERED FROM PART NUMBER:		
		BACP10U0300N		
100	NAS1801-06-5	..SCREW	108120	4
101	285T0158-29	..COVER ASSY-	108120	1
		SUPPLIER CODE:		
		V89954		
		ATTACHING PARTS		
- 102	NAS514P440-5	..SCREW	108120	4
		-------*-------		
103	285T0158-7	..PANEL-	108120	1
		SUPPLIER CODE:		
		V89954		
104	MS35214-13	..SCREW	108120	3
106	NAS514P440-5	..SCREW	108120	3
107	92-1660-40	..NUT	108120	2
		SUPPLIER CODE:		
		V72962		
		SPECIFICATION NUMBER:		
		BACN10DN40		
		OPTIONAL PART:		
		92-1660-440		
		V15653		
108	285T0158-25	..BRACKET ASSY-	108120	1
		SUPPLIER CODE:		
		V89954		
109	BAC27TEX1986	...DECAL-	108120	1
		SUPPLIER CODE:		
		V89954		

MISSING ITEM NUMBERS NOT APPLICABLE

- ITEM NOT ILLUSTRATED

BOEING PROPRIETARY - Copyright © - Unpublished Work - See title page for details.

FIG ITEM	PART NUMBER	1 2 3 4 5 6 7 NOMENCLATURE	EFFECT FROM TO	UNITS PER ASSY
65A				
111	285T0158-27	..BRACKET ASSY-	108120	1
		SUPPLIER CODE:		
		V89954		
112	285T0158-21	..BLOCK-MTG	108120	4
		SUPPLIER CODE:		
		V89954		
		ATTACHING PARTS		
- 113	NAS514P440-5	..SCREW	108120	4
		-------*-------		
115	233T3216-300	.PANEL ASSY-PASS. SIGN CONT	108120	1
		SUPPLIER CODE:		
		V89954		
		ELECTRICAL EQUIP NUMBER:		
		M00052		
		COMPONENT MAINT MANUAL REF:		
		33-24-02		
		FOR OTHER SYS DETAILS SEE:		
		33-13-01-02		
		33-24-51-02		
- 120	233T3216-10	..PANEL ASSY-	108120	RF
		SUPPLIER CODE:		
		V89954		
125	NAS514P632-5	...SCREW	108120	3
130	NAS1801-6-5	...SCREW	108120	3
135	MS35338-41	...WASHER	108120	3
140	69B46200-9	...STANDOFF	108120	3
145	233T6200-85	...BRACKET-SPRT	108120	1
150	233T3216-2	...BASEPLATE ASSY-	108120	1
		SUPPLIER CODE:		
		V89954		
155	SF6G6CBB5D	....NUT	108120	3
		SUPPLIER CODE:		
		V12324		
		SPECIFICATION NUMBER:		
		BACN10PA06-6		
160	BACS21DD1B	....STUD ASSY	108120	4
		SUPPLIER CODE:		
		V08524		
		SPECIFICATION NUMBER:		
		BACS21DD1B		
165	233T3216-3	....BASEPLATE-	108120	1
		SUPPLIER CODE:		
		V89954		

MISSING ITEM NUMBERS NOT APPLICABLE

- ITEM NOT ILLUSTRATED

BOEING PROPRIETARY - Copyright © - Unpublished Work - See title page for details.

FIG ITEM	PART NUMBER	1 2 3 4 5 6 7 NOMENCLATURE	EFFECT FROM TO	UNITS PER ASSY
65A				
170	130502-7	.PANEL ASSY-CAB. ALTITUDE SUPPLIER CODE: V64547 FUNCTIONAL DESCRIPTION: SELECTOR CONTAINS CONTROLS AND CIRCUITRY NECESSARY FOR AUTOMATIC OR MANUAL PRESSURE SELECTION SPECIFICATION NUMBER: S210T160-72 ELECTRICAL EQUIP NUMBER: M00013 COMPONENT MAINT MANUAL REF: 21-31-50 FOR BREAKDOWN SEE: 21-31-01-02	108120	RF
170	130502-6	.PANEL ASSY-CAB. ALTITUDE SUPPLIER CODE: V64547 SPECIFICATION NUMBER: S210T160-62 ELECTRICAL EQUIP NUMBER: M00013 COMPONENT MAINT MANUAL REF: 21-31-50 FOR BREAKDOWN SEE: 21-31-01-02	108120	RF
170	130502-5	.PANEL ASSY-CAB. ALTITUDE SUPPLIER CODE: V64547 SPECIFICATION NUMBER: S210T160-52 ELECTRICAL EQUIP NUMBER: M00013 COMPONENT MAINT MANUAL REF: 21-31-50 FOR BREAKDOWN SEE: 21-31-01-02	108120	RF

MISSING ITEM NUMBERS NOT APPLICABLE

– ITEM NOT ILLUSTRATED

BOEING PROPRIETARY - Copyright © - Unpublished Work - See title page for details.

FIG ITEM	PART NUMBER	1 2 3 4 5 6 7 NOMENCLATURE	EFFECT FROM TO	UNITS PER ASSY
65A				
170	130502-4	.PANEL ASSY-CAB. ALTITUDE SUPPLIER CODE: V64547 SPECIFICATION NUMBER: S210T160-42 ELECTRICAL EQUIP NUMBER: M00013 COMPONENT MAINT MANUAL REF: 21-31-50 FOR BREAKDOWN SEE: 21-31-01-02	108120	RF
175	SETL0C420L	.PANEL ASSY-CAB. PRESSURE GAUGES SUPPLIER CODE: V61349 SPECIFICATION NUMBER: S231N210-15 ELECTRICAL EQUIP NUMBER: M00019 COMPONENT MAINT MANUAL REF: 21-33-07 FOR OTHER SYS DETAILS SEE: 21-33-51-03	108120	RF
180	233N3203-300	.PANEL ASSY-EQPT COOLING SUPPLIER CODE: V89954 ELECTRICAL EQUIP NUMBER: M10067 COMPONENT MAINT MANUAL REF: 21-58-71 QUALIFIED I/W DATA: 233N3203-300 PANEL ASSY IS I/W 233N3203-32 PANEL ASSY T/W S233T100-6045 LIGHTPLATE PRE ALERT SB: 33A0044 FOR OTHER SYS DETAILS SEE: 21-33-51-03 21-58-19-10 21-58-51-03 33-13-01-02 11-31-10-12	108120	1

MISSING ITEM NUMBERS NOT APPLICABLE

— ITEM NOT ILLUSTRATED

BOEING PROPRIETARY - Copyright © - Unpublished Work - See title page for details.

FIG ITEM	PART NUMBER	1 2 3 4 5 6 7 NOMENCLATURE	EFFECT FROM TO	UNITS PER ASSY
65A				
180	233N3203-1300	.PANEL ASSY-EQPT COOLING SUPPLIER CODE: V89954 ELECTRICAL EQUIP NUMBER: M10067 COMPONENT MAINT MANUAL REF: 21-58-71 POST ALERT SB: 33A0044 FOR OTHER SYS DETAILS SEE: 21-33-51-03 21-58-19-10 21-58-51-03 33-13-01-02 11-31-10-12	108120	1
180	233N3203-337	.PANEL ASSY-EQPT COOLING SUPPLIER CODE: V89954 ELECTRICAL EQUIP NUMBER: M10067 COMPONENT MAINT MANUAL REF: 21-58-71 FOR OTHER SYS DETAILS SEE: 21-33-51-03 21-58-19-10 21-58-51-03 33-13-01-02 11-31-10-12	108120	1
- 185	233N3203-32	..PANEL ASSY- SUPPLIER CODE: V89954 COMPONENT MAINT MANUAL REF: 21-58-71 QUALIFIED I/W DATA: 233N3203-300 PANEL ASSY IS I/W 233N3203-32 PANEL ASSY T/W S233T100-6045 LIGHTPLATE USED ON: 233N3203-300 PRE ALERT SB: 33A0044	108120	RF

MISSING ITEM NUMBERS NOT APPLICABLE

- ITEM NOT ILLUSTRATED

BOEING PROPRIETARY - Copyright © - Unpublished Work - See title page for details.

FIG ITEM	PART NUMBER	1 2 3 4 5 6 7 NOMENCLATURE	EFFECT FROM TO	UNITS PER ASSY
65A				
- 185	233N3203-1032	..PANEL ASSY- SUPPLIER CODE: V89954 COMPONENT MAINT MANUAL REF: 21-58-71 USED ON: 233N3203-1300 POST ALERT SB: 33A0044	108120	RF
- 185	233N3203-37	..PANEL ASSY- SUPPLIER CODE: V89954 COMPONENT MAINT MANUAL REF: 21-58-71 USED ON: 233N3203-337	108120	RF
190	NAS514P632-6	...SCREW	108120	3
195	BACS12HN06-5	...SCREW	108120	3
200	BACW10EC06S	...WASHER-	108120	3
205	69B46200-11	...STANDOFF	108120	3
210	233N3250-10	...BRACKET	108120	1
215	233N3203-19	...BASEPLATE ASSY- SUPPLIER CODE: V89954	108120	1
220	PFSC35-38ASEMB	....STUD ASSY- SUPPLIER CODE: V72794 SPECIFICATION NUMBER: BACS21DX1B	108120	4
225	SF6G6CBB5D	....NUT SUPPLIER CODE: V12324 SPECIFICATION NUMBER: BACN10PA06-6	108120	2
230	233N3203-21	....BASEPLATE- SUPPLIER CODE: V89954	108120	1
235	BACP10U0112T	.PANEL ASSY	108120	1

MISSING ITEM NUMBERS NOT APPLICABLE

- ITEM NOT ILLUSTRATED

BOEING PROPRIETARY - Copyright © - Unpublished Work - See title page for details.

FIG ITEM	PART NUMBER	1 2 3 4 5 6 7 NOMENCLATURE	EFFECT FROM TO	UNITS PER ASSY
65A				
240	233N3221-302	.PANEL ASSY-LIGHTING CONT SUPPLIER CODE: V89954 POSITION DATA: R ELECTRICAL EQUIP NUMBER: M10057 COMPONENT MAINT MANUAL REF: 33-11-72 QUALIFIED I/W DATA: 233N3221-302 PANEL ASSY IS I/W 233N3221-61 PANEL ASSY T/W S233T100-6039 LIGHTPLATE AND (3) RD241-119 KNOBS AND (1) BP248-127 KNOB FOR OTHER SYS DETAILS SEE: 33-11-51-17 33-13-01-02 33-13-02-03 33-16-51-03 33-45-53-03 52-51-51-03	108120	1
240	233N3221-326	.PANEL ASSY-LIGHTING CONT SUPPLIER CODE: V89954 POSITION DATA: R ELECTRICAL EQUIP NUMBER: M10057 COMPONENT MAINT MANUAL REF: 33-11-72 FOR OTHER SYS DETAILS SEE: 33-11-51-17 33-13-01-02 33-13-02-03 33-16-51-03 33-45-53-03 52-51-51-03	108120	1

MISSING ITEM NUMBERS NOT APPLICABLE

– ITEM NOT ILLUSTRATED

BOEING PROPRIETARY - Copyright © - Unpublished Work - See title page for details.

FIG ITEM	PART NUMBER	1 2 3 4 5 6 7 NOMENCLATURE	EFFECT FROM TO	UNITS PER ASSY
65A				
- 245	233N3221-61	..PANEL ASSY-	108120	RF
		SUPPLIER CODE:		
		V89954		
		COMPONENT MAINT MANUAL REF:		
		33-11-72		
		QUALIFIED I/W DATA:		
		233N3221-302 PANEL ASSY		
		IS I/W 233N3221-61 PANEL		
		ASSY T/W S233T100-6039		
		LIGHTPLATE AND (3)		
		RD241-119 KNOBS AND (1)		
		BP248-127 KNOB		
		USED ON:		
		233N3221-302		
- 245	233N3221-110	..PANEL ASSY-	108120	RF
		SUPPLIER CODE:		
		V89954		
		COMPONENT MAINT MANUAL REF:		
		33-11-72		
		USED ON:		
		233N3221-326		
250	NAS514P632-5	...SCREW-	108120	3
		USED ON:		
		233N3221-61		
250	FH6C5CPL12BN	...SCREW-	108120	3
		SUPPLIER CODE:		
		V12324		
		OPTIONAL PART:		
		NAS514P632-6		
		USED ON:		
		233N3221-110		
250	NAS514P632-6	...SCREW-	108120	3
		OPTIONAL PART:		
		FH6C5CPL12BN		
		V12324		
		USED ON:		
		233N3221-110		
255	BACS12HN06-5	...SCREW-	108120	3
260	BACW10EC06S	...WASHER-	108120	3
		USED ON:		
		233N3221-61		
260	BACW10EC06CD	...WASHER-	108120	3
		USED ON:		
		233N3221-110		
265	233N3250-48	...BRACKET	108120	1
270	69B46200-10	...STANDOFF	108120	3

MISSING ITEM NUMBERS NOT APPLICABLE

- ITEM NOT ILLUSTRATED

BOEING PROPRIETARY - Copyright © - Unpublished Work - See title page for details.

FIG ITEM	PART NUMBER	1 2 3 4 5 6 7 NOMENCLATURE	EFFECT FROM TO	UNITS PER ASSY
65A				
275	233N3221-33	...BASEPLATE ASSY- SUPPLIER CODE: V89954 USED ON: 233N3221-61	108120	1
277	233N3221-104	...BASEPLATE ASSY- SUPPLIER CODE: V89954 USED ON: 233N3221-110	108120	1
280	BACS21DD1B	....STUD ASSY- SUPPLIER CODE: V08524 SPECIFICATION NUMBER: BACS21DD1B OPTIONAL PART: BACS21DX1B USED ON: 233N3221-33	108120	4
280	PFSC35-38ASEMB	....STUD ASSY- SUPPLIER CODE: V72794 SPECIFICATION NUMBER: BACS21DX1B OPTIONAL PART: BACS21DD1B USED ON: 233N3221-33	108120	4
282	PFSC35-38ASEMB	....STUD ASSY- SUPPLIER CODE: V72794 SPECIFICATION NUMBER: BACS21DX1B USED ON: 233N3221-104	108120	4
285	SF6G6CBB5D	....NUT- SUPPLIER CODE: V12324 SPECIFICATION NUMBER: BACN10PA06-6 USED ON: 233N3221-33	108120	4
287	SF6G6CBB5D	....NUT- SUPPLIER CODE: V12324 USED ON: 233N3221-104	108120	4

MISSING ITEM NUMBERS NOT APPLICABLE

— ITEM NOT ILLUSTRATED

BOEING PROPRIETARY - Copyright © - Unpublished Work - See title page for details.

FIG ITEM	PART NUMBER	1 2 3 4 5 6 7 NOMENCLATURE	EFFECT FROM TO	UNITS PER ASSY
65A				
290	233N3221-37	....BASEPLATE- SUPPLIER CODE: V89954 USED ON: 233N3221-33	108120	1
292	233N3221-105	....BASEPLATE- SUPPLIER CODE: V89954 USED ON: 233N3221-104	108120	1
295	BACP10U0300T	.PANEL ASSY	108120	1
300	2263-01-1	.INDICATOR ASSY-COMPT TEMP SUPPLIER CODE: V52013 FUNCTIONAL DESCRIPTION: INDICATOR SHOWS COMPARTMENT TEMPERATURE FOR EA OF THE THREE CABIN ZONES SPECIFICATION NUMBER: S231N211-3 ELECTRICAL EQUIP NUMBER: M10078 COMPONENT MAINT MANUAL REF: 21-61-02 FOR BREAKDOWN SEE: 21-65-51-01	108120	RF
300	20-210-01	.INDICATOR ASSY-COMPT TEMP SUPPLIER CODE: V35012 SPECIFICATION NUMBER: S231N211-2 ELECTRICAL EQUIP NUMBER: M10078 COMPONENT MAINT MANUAL REF: 21-65-01 FOR BREAKDOWN SEE: 21-65-51-01	108120	RF

MISSING ITEM NUMBERS NOT APPLICABLE

– ITEM NOT ILLUSTRATED

BOEING PROPRIETARY - Copyright © - Unpublished Work - See title page for details.

FIG ITEM	PART NUMBER	1 2 3 4 5 6 7 NOMENCLATURE	EFFECT FROM TO	UNITS PER ASSY
65A				
305	233N3217-300	.PANEL ASSY-AIR CONDITIONING CONT SUPPLIER CODE: V89954 ELECTRICAL EQUIP NUMBER: M10193 COMPONENT MAINT MANUAL REF: 21-51-71 QUALIFIED I/W DATA: THE 233N3217-300 PANEL ASSY IS I/W THE 233N3217-15 PANEL ASSY T/W THE S233T100-6014 LIGHTPLATE AND (2) BP248-127 KNOBS AND (3) BP260-113 KNOBS FOR OTHER SYS DETAILS SEE: 21-25-55-03 21-51-54-03 21-61-04-03 33-13-01-02	108120	1
- 310	233N3217-15	..PANEL ASSY- SUPPLIER CODE: V89954 COMPONENT MAINT MANUAL REF: 21-51-71 QUALIFIED I/W DATA: THE 233N3217-300 PANEL ASSY IS I/W THE 233N3217-15 PANEL ASSY T/W THE S233T100-6014 LIGHTPLATE AND (2) BP248-127 KNOBS AND (3) BP260-113 KNOBS	108120	RF
315	NAS514P632-5	...SCREW	108120	3
320	NAS1801-06-5	...SCREW- OPTIONAL PART: BACS12HN06-5	108120	3
320	BACS12HN06-5	...SCREW- OPTIONAL PART: NAS1801-06-5	108120	3
325	BACW10EC06S	...WASHER-	108120	3
330	69B46200-14	...STANDOFF	108120	3
335	233N3250-13	...BRACKET	108120	1

MISSING ITEM NUMBERS NOT APPLICABLE

- ITEM NOT ILLUSTRATED

BOEING PROPRIETARY - Copyright © - Unpublished Work - See title page for details.

FIG ITEM	PART NUMBER	1 2 3 4 5 6 7 NOMENCLATURE	EFFECT FROM TO	UNITS PER ASSY
65A				
340	233N3217-2	...BASEPLATE ASSY- SUPPLIER CODE: V89954 OPTIONAL PART: 233N3217-9 V89954	108120	1
340	233N3217-9	...BASEPLATE ASSY- SUPPLIER CODE: V89954 OPTIONAL PART: 233N3217-2 V89954	108120	1
345	PFSC35-38ASEMB	....STUD ASSY- SUPPLIER CODE: V72794 SPECIFICATION NUMBER: BACS21DX1B	108120	6
350	SF6G6CBB5D	....NUT SUPPLIER CODE: V12324 SPECIFICATION NUMBER: BACN10PA06-6	108120	5
355	233N3217-3	....BASEPLATE- SUPPLIER CODE: V89954 USED ON: 233N3217-2	108120	1
355	233N3217-10	....BASEPLATE- SUPPLIER CODE: V89954 USED ON: 233N3217-9	108120	1

MISSING ITEM NUMBERS NOT APPLICABLE

– ITEM NOT ILLUSTRATED

BOEING PROPRIETARY - Copyright © - Unpublished Work - See title page for details.

FIG ITEM	PART NUMBER	1 2 3 4 5 6 7 NOMENCLATURE	EFFECT FROM TO	UNITS PER ASSY
65A				
360	233N3215-302	.PANEL ASSY-BLEED AIR SUPPLIER CODE: V89954 ELECTRICAL EQUIP NUMBER: M10259 COMPONENT MAINT MANUAL REF: 36-11-71 QUALIFIED I/W DATA: THE 233N3215-302 PANEL ASSY IS I/W THE 233N3215-20 PANEL ASSY T/W THE S233T100-6009 LIGHTPLATE PRE ALERT SB: 33A0044 FOR OTHER SYS DETAILS SEE: 26-18-51-04 33-13-01-02 36-11-04-01 36-21-00-01 36-21-02-05 36-22-51-03 49-52-00-01 75-32-00-01	108120	1
360	233N3215-1302	.PANEL ASSY-BLEED AIR SUPPLIER CODE: V89954 ELECTRICAL EQUIP NUMBER: M10259 COMPONENT MAINT MANUAL REF: 36-11-71 POST ALERT SB: 33A0044 FOR OTHER SYS DETAILS SEE: 26-18-51-04 33-13-01-02 36-11-04-01 36-21-00-01 36-21-02-05 36-22-51-03 49-52-00-01 75-32-00-01	108120	1

MISSING ITEM NUMBERS NOT APPLICABLE

– ITEM NOT ILLUSTRATED

BOEING PROPRIETARY - Copyright © - Unpublished Work - See title page for details.

FIG ITEM	PART NUMBER	1 2 3 4 5 6 7 NOMENCLATURE	EFFECT FROM TO	UNITS PER ASSY
65A				
360	233N3215-305	.PANEL ASSY-BLEED AIR SUPPLIER CODE: V89954 ELECTRICAL EQUIP NUMBER: M10259 COMPONENT MAINT MANUAL REF: 36-11-71 FOR OTHER SYS DETAILS SEE: 26-18-51-04 33-13-01-02 36-11-04-01 36-21-00-01 36-21-02-05 36-22-51-03 49-52-00-01 75-32-00-01	108120	1
- 365	233N3215-20	..PANEL ASSY- SUPPLIER CODE: V89954 MISCELLANEOUS DATA: FOR SPARES PROCURE NEXT HIGHER ASSY COMPONENT MAINT MANUAL REF: 36-11-71 QUALIFIED I/W DATA: THE 233N3215-302 PANEL ASSY IS I/W THE 233N3215-20 PANEL ASSY T/W THE S233T100-6009 LIGHTPLATE PRE ALERT SB: 33A0044	108120	RF
- 365	233N3215-1020	..PANEL ASSY- SUPPLIER CODE: V89954 COMPONENT MAINT MANUAL REF: 36-11-71 QUALIFIED I/W DATA: 233N3215-1009,-1015, -1019 AND -1020 ARE INTERCHANGEABLE PER CUSTOMER PREFERENCE. POST ALERT SB: 33A0044	108120	RF

MISSING ITEM NUMBERS NOT APPLICABLE

- ITEM NOT ILLUSTRATED

BOEING PROPRIETARY - Copyright © - Unpublished Work - See title page for details.

FIG ITEM	PART NUMBER	1 2 3 4 5 6 7 NOMENCLATURE	EFFECT FROM TO	UNITS PER ASSY
65A				
- 365	233N3215-23	..PANEL ASSY- SUPPLIER CODE: V89954 MISCELLANEOUS DATA: FOR SPARES PROCURE NEXT HIGHER ASSY ELECTRICAL EQUIP NUMBER: M10259 COMPONENT MAINT MANUAL REF: 36-11-71	108120	RF
370	NAS514P632-5	...SCREW- USED ON: 233N3215-20 233N3215-1020	108120	3
370	FH6C5TPKL12BN	...SCREW- SUPPLIER CODE: V12324 USED ON: 233N3215-23	108120	3
375	NAS1801-04-6	...SCREW- USED ON: 233N3215-20 233N3215-1020	108120	3
375	BACS12HN06-5	...SCREW- OPTIONAL PART: NAS1801-06-5 USED ON: 233N3215-23	108120	3
375	NAS1801-06-5	...SCREW- OPTIONAL PART: BACS12HN06-5 USED ON: 233N3215-23	108120	3
380	MS35338-41	...WASHER- USED ON: 233N3215-20 233N3215-1020	108120	3
380	BACW10EC06S	...WASHER- USED ON: 233N3215-23	108120	3
385	69B46200-11	...STANDOFF	108120	3
390	233N3250-39	...BRACKET-SPRT	108120	1
395	233N3215-10	...BASEPLATE ASSY- SUPPLIER CODE: V89954	108120	1

MISSING ITEM NUMBERS NOT APPLICABLE

- ITEM NOT ILLUSTRATED

BOEING PROPRIETARY - Copyright © - Unpublished Work - See title page for details.

FIG ITEM	PART NUMBER	1 2 3 4 5 6 7 NOMENCLATURE	EFFECT FROM TO	UNITS PER ASSY
65A				
400	PFSC35-38ASEMB	....STUD ASSY-	108120	4
		SUPPLIER CODE:		
		V72794		
		SPECIFICATION NUMBER:		
		BACS21DX1B		
405	233N3215-11	....BASEPLATE-	108120	1
		SUPPLIER CODE:		
		V89954		
410	SF6G6CBB5D	....NUT	108120	4
		SUPPLIER CODE:		
		V12324		
		SPECIFICATION NUMBER:		
		BACN10PA06-6		
415	233T3230-22	.PANEL ASSY-ENTERTAINMENT	108120	1
		ELECTRICAL EQUIP NUMBER:		
		M01111		
		COMPONENT MAINT MANUAL REF:		
		23-32-52		
		FOR BREAKDOWN SEE:		
		23-32-00-11		
420	NAS514P632-5	..SCREW	108120	3
425	BACS12CB06-5	..SCREW	108120	3
430	MS35338-41	..WASHER	108120	3
435	69B46200-10	..STANDOFF	108120	3
440	233T6200-27	..BRACKET	108120	1
445	233T3230-2	..BASEPLATE ASSY	108120	1
450	BACS21DD1B	...STUD ASSY	108120	3
		SUPPLIER CODE:		
		V08524		
		SPECIFICATION NUMBER:		
		BACS21DD1B		
455	233T3200-3	...BASEPLATE	108120	1

MISSING ITEM NUMBERS NOT APPLICABLE

— ITEM NOT ILLUSTRATED

BOEING PROPRIETARY - Copyright © - Unpublished Work - See title page for details.

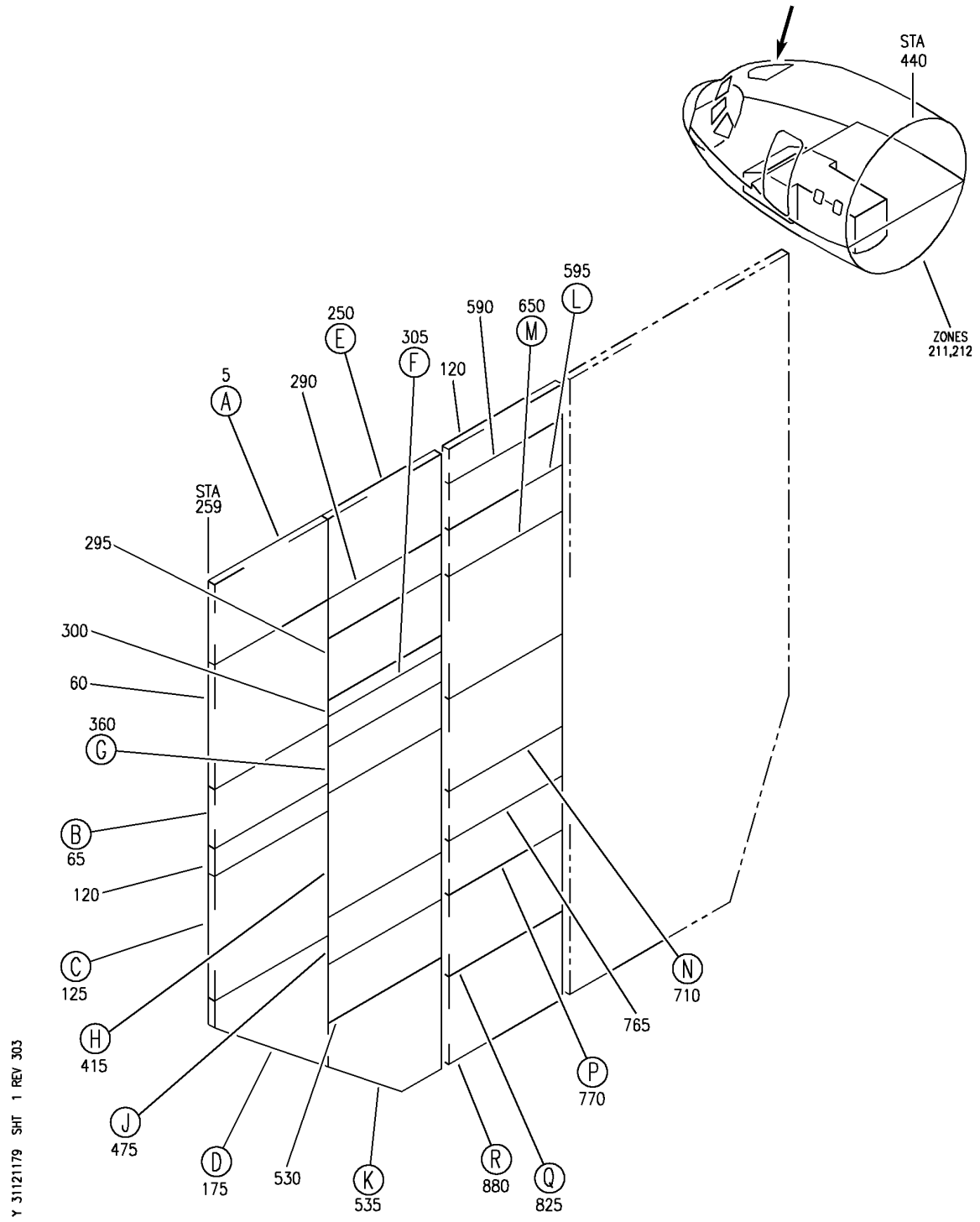

PANEL INSTL-P5 OVHD (INDICATING/RECORDING SYSTEMS ONLY)
FIGURE 79 (SHEET 1)

BOEING PROPRIETARY - Copyright © - Unpublished Work - See title page for details.

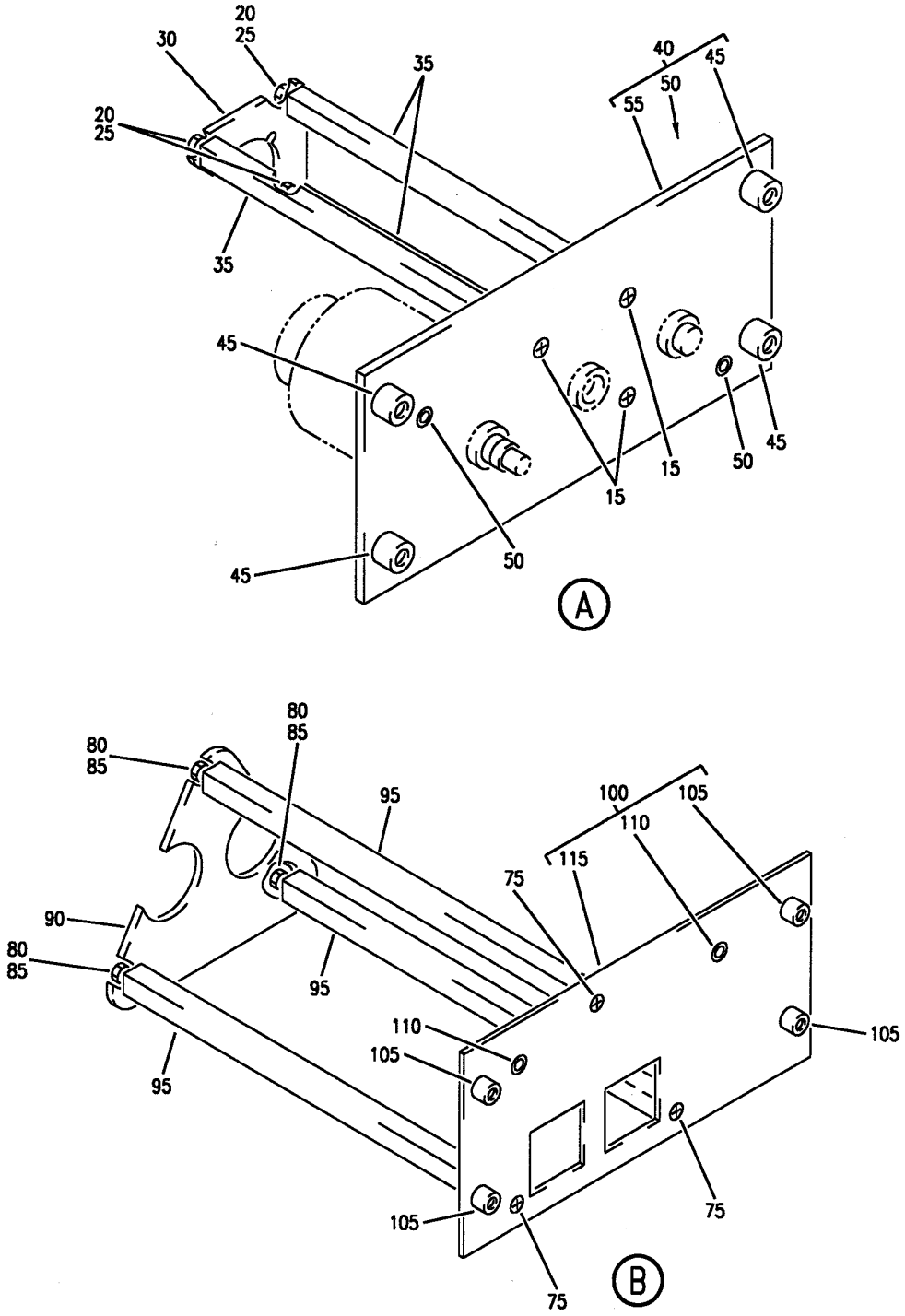

PANEL INSTL-P5 OVHD (INDICATING/RECORDING SYSTEMS ONLY)
FIGURE 79 (SHEET 2)

BOEING PROPRIETARY - Copyright © - Unpublished Work - See title page for details.

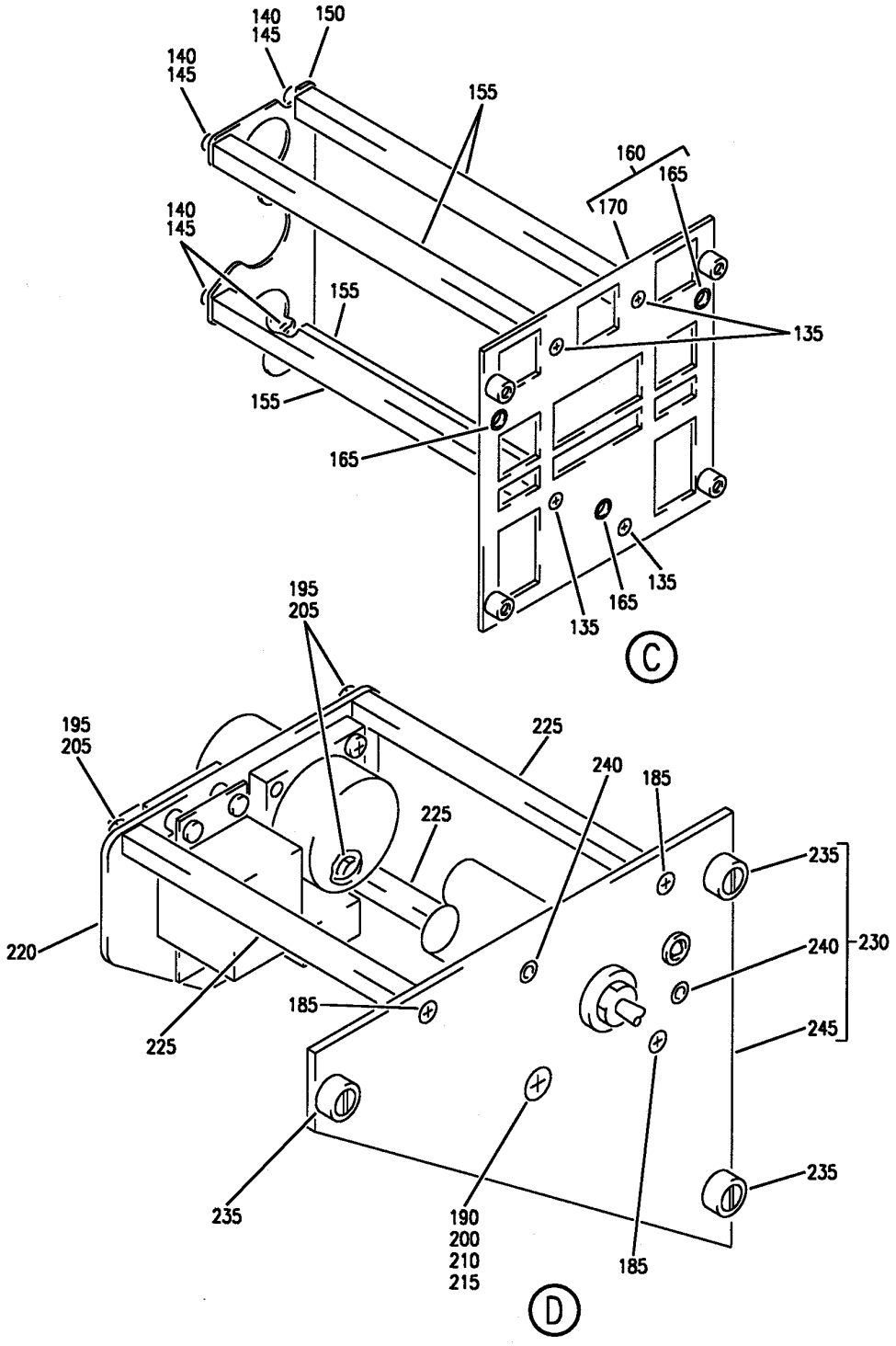

PANEL INSTL-P5 OVHD (INDICATING/RECORDING SYSTEMS ONLY)
FIGURE 79 (SHEET 3)

BOEING PROPRIETARY - Copyright © - Unpublished Work - See title page for details.

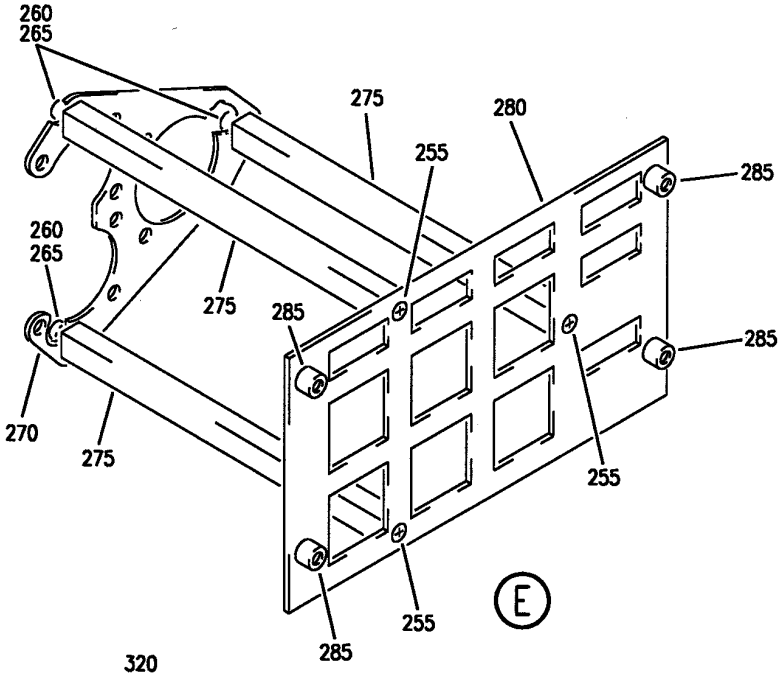

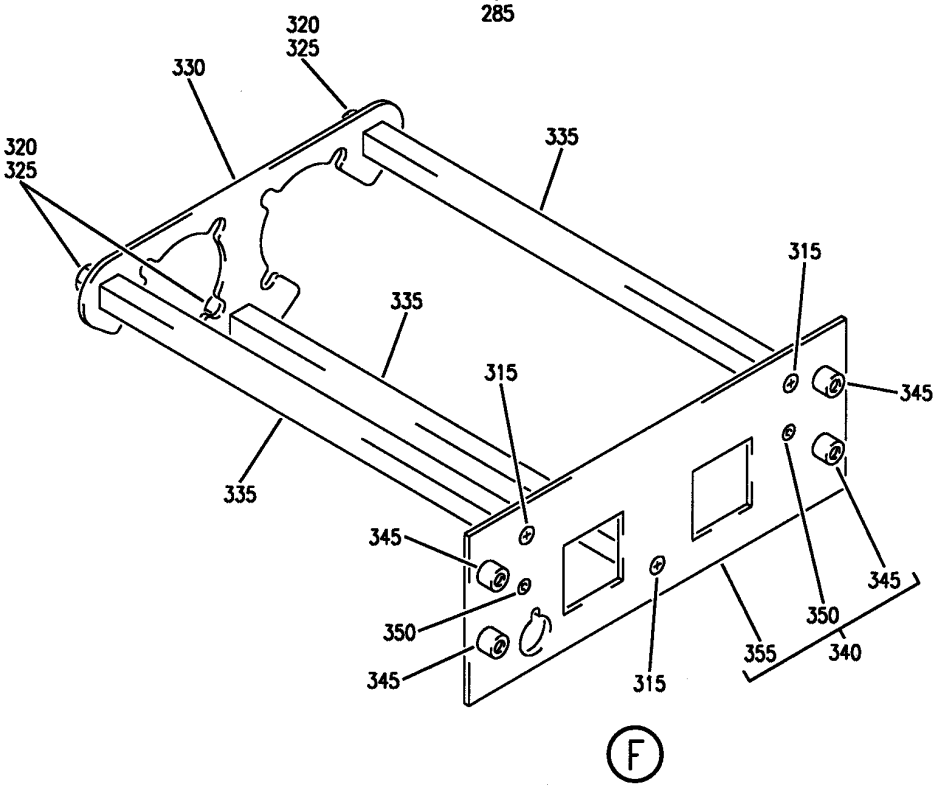

Y 31121179 SHT 4 REV 215

PANEL INSTL-P5 OVHD (INDICATING/RECORDING SYSTEMS ONLY)
FIGURE 79 (SHEET 4)

BOEING PROPRIETARY - Copyright © - Unpublished Work - See title page for details.

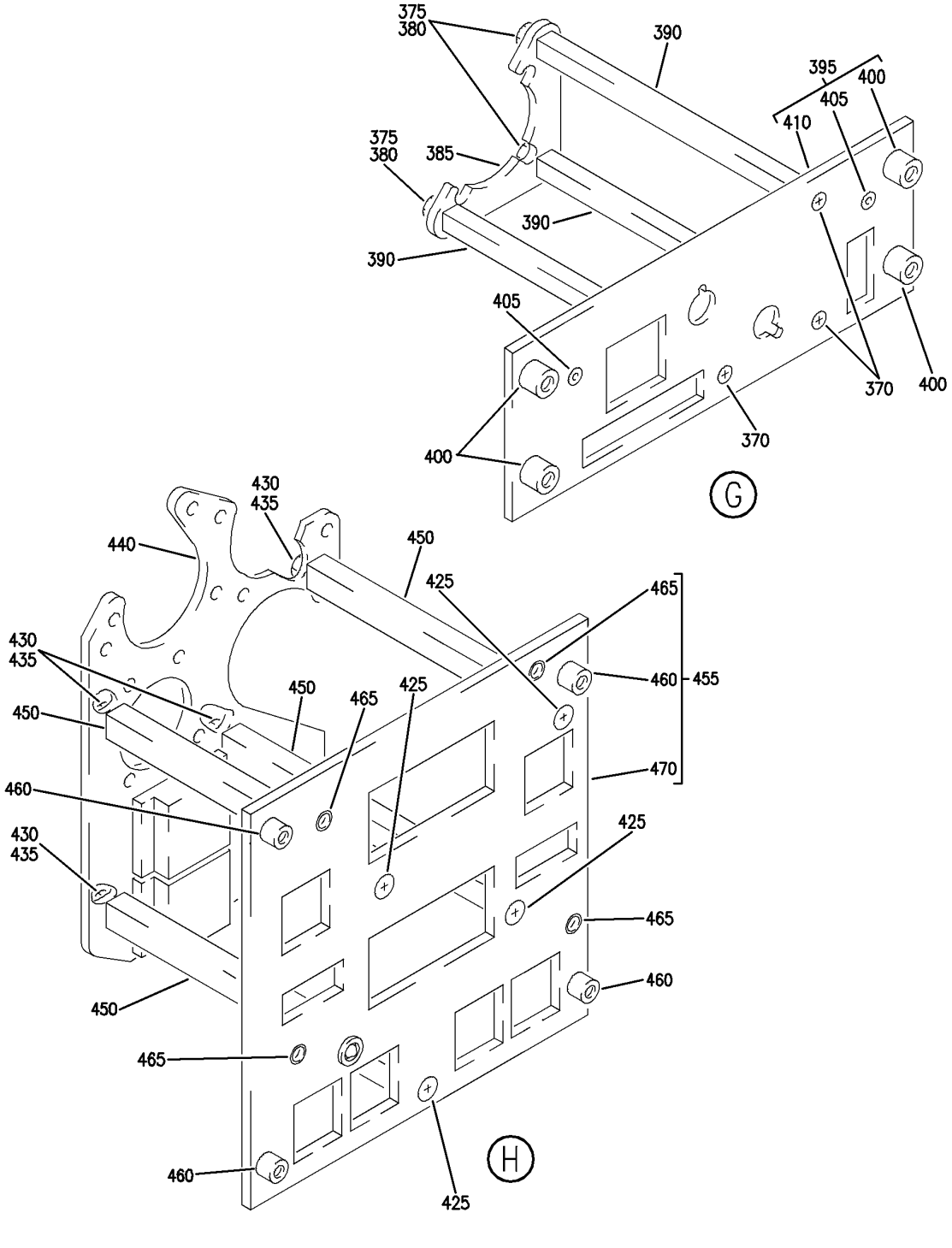

PANEL INSTL-P5 OVHD (INDICATING/RECORDING SYSTEMS ONLY)
FIGURE 79 (SHEET 5)

BOEING PROPRIETARY - Copyright © - Unpublished Work - See title page for details.

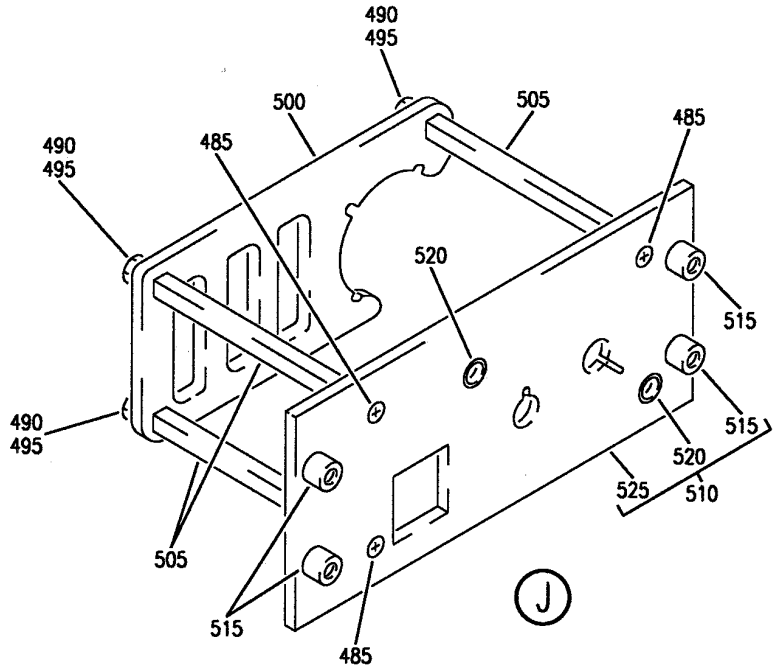

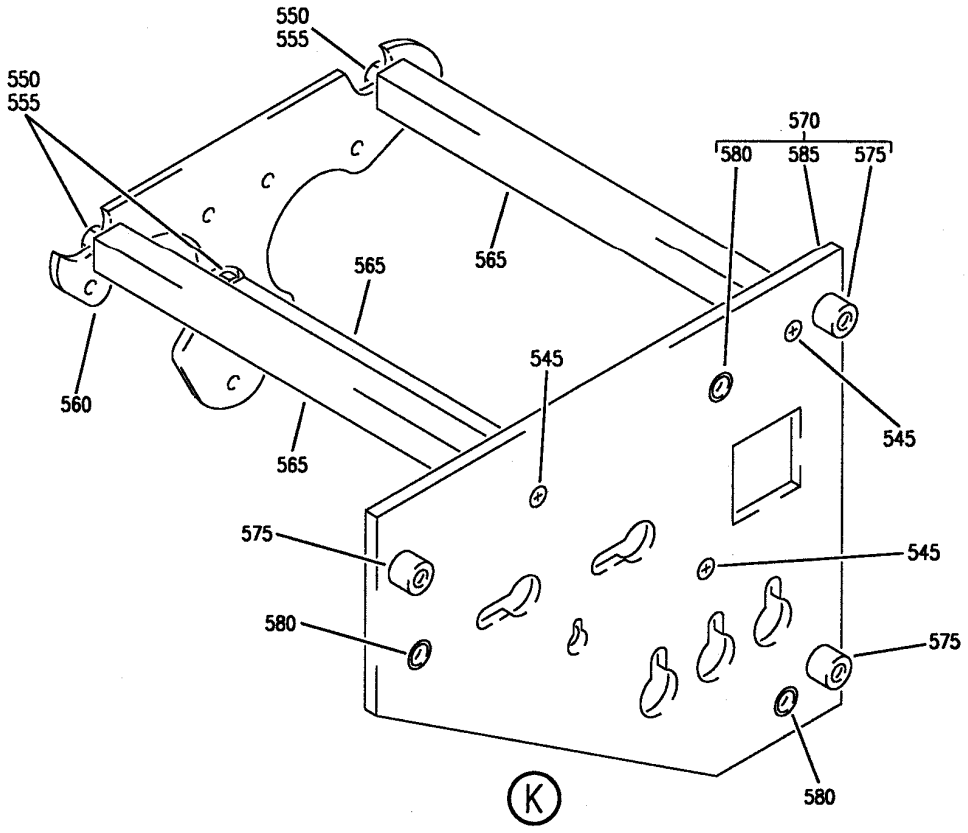

Y 31121179 SHT 6 REV 215

PANEL INSTL-P5 OVHD (INDICATING/RECORDING SYSTEMS ONLY)
FIGURE 79 (SHEET 6)

BOEING PROPRIETARY - Copyright © - Unpublished Work - See title page for details.

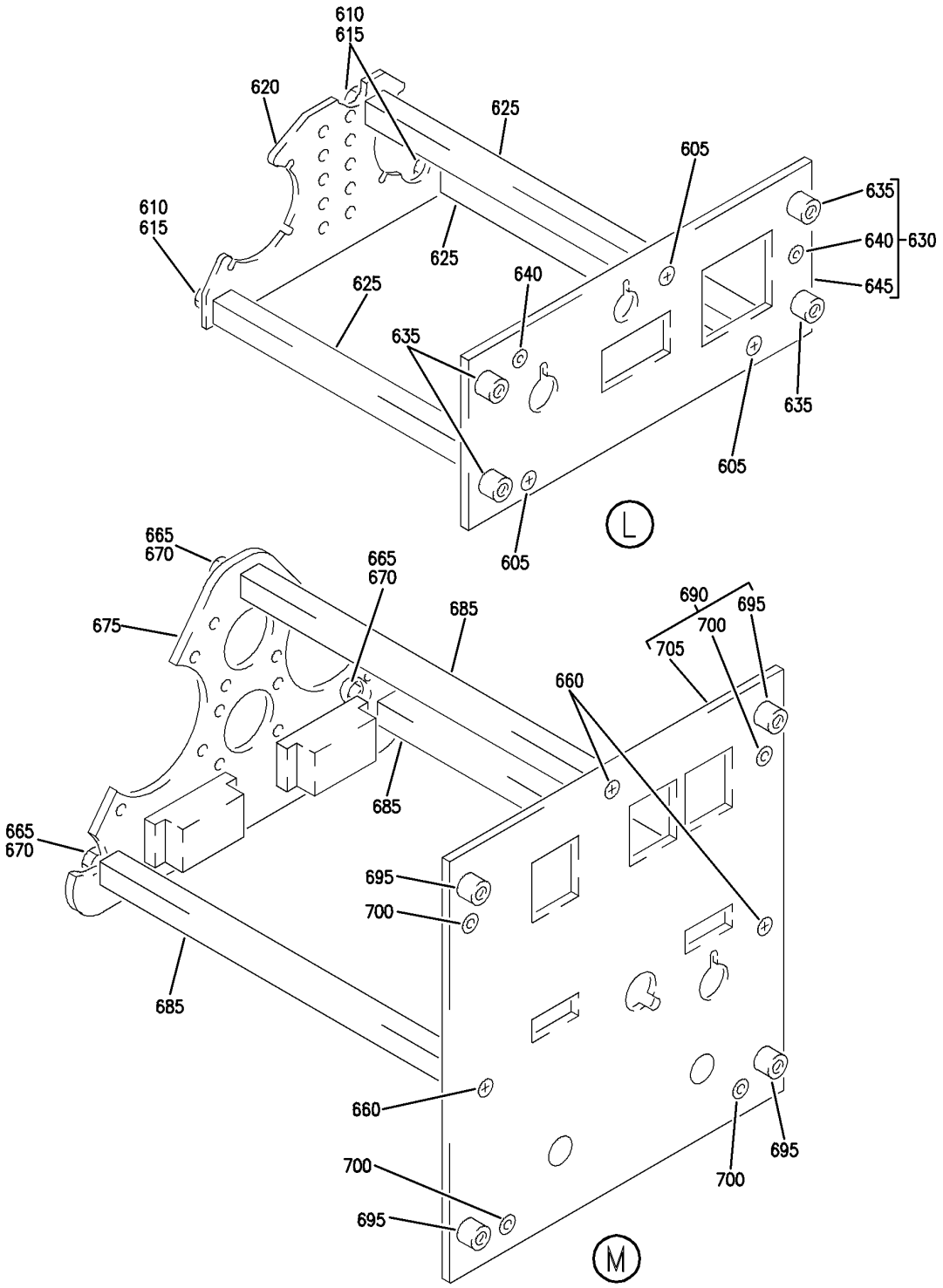

PANEL INSTL-P5 OVHD (INDICATING/RECORDING SYSTEMS ONLY)
FIGURE 79 (SHEET 7)

BOEING PROPRIETARY - Copyright © - Unpublished Work - See title page for details.

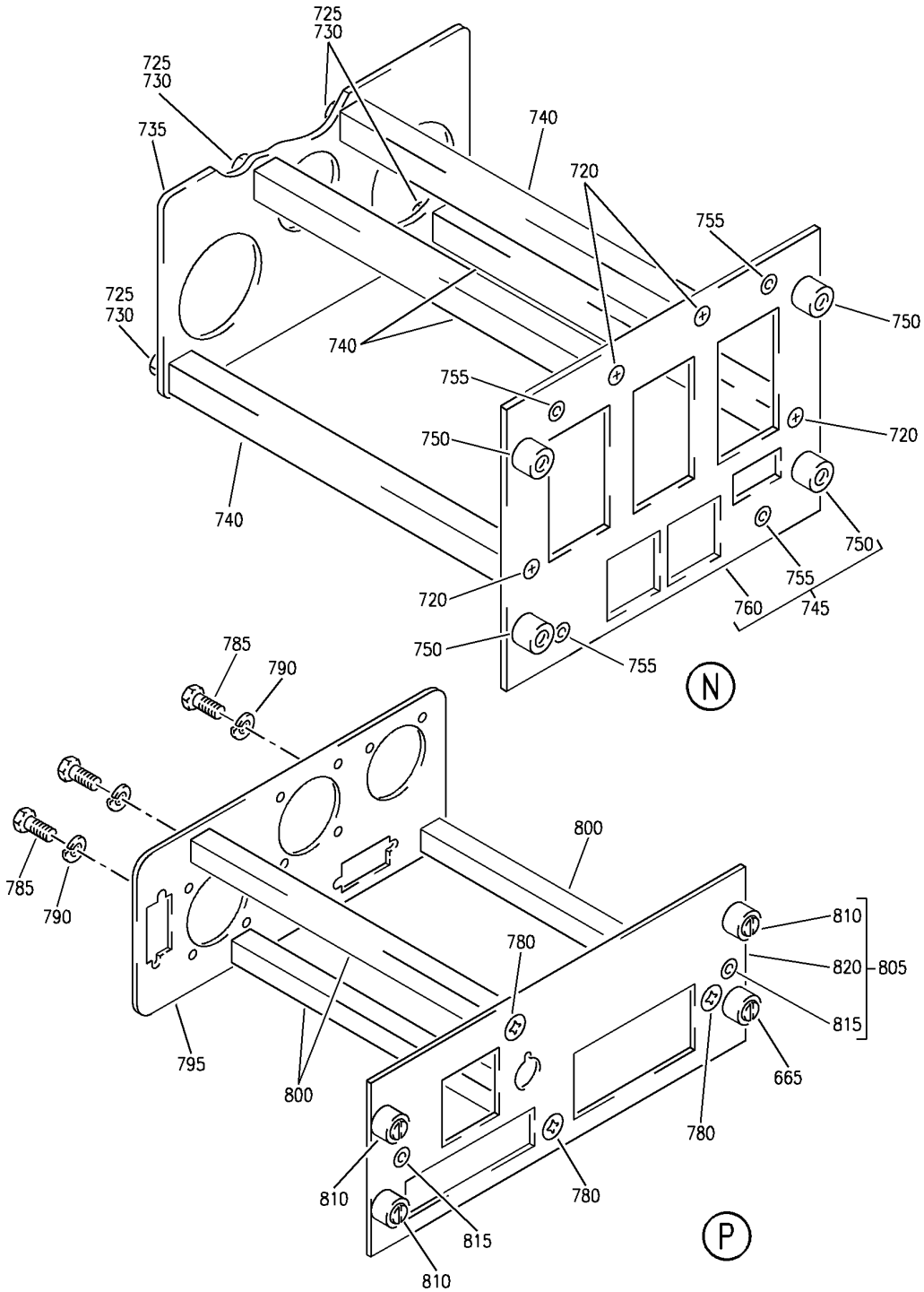

PANEL INSTL-P5 OVHD (INDICATING/RECORDING SYSTEMS ONLY)
FIGURE 79 (SHEET 8)

BOEING PROPRIETARY - Copyright © - Unpublished Work - See title page for details.

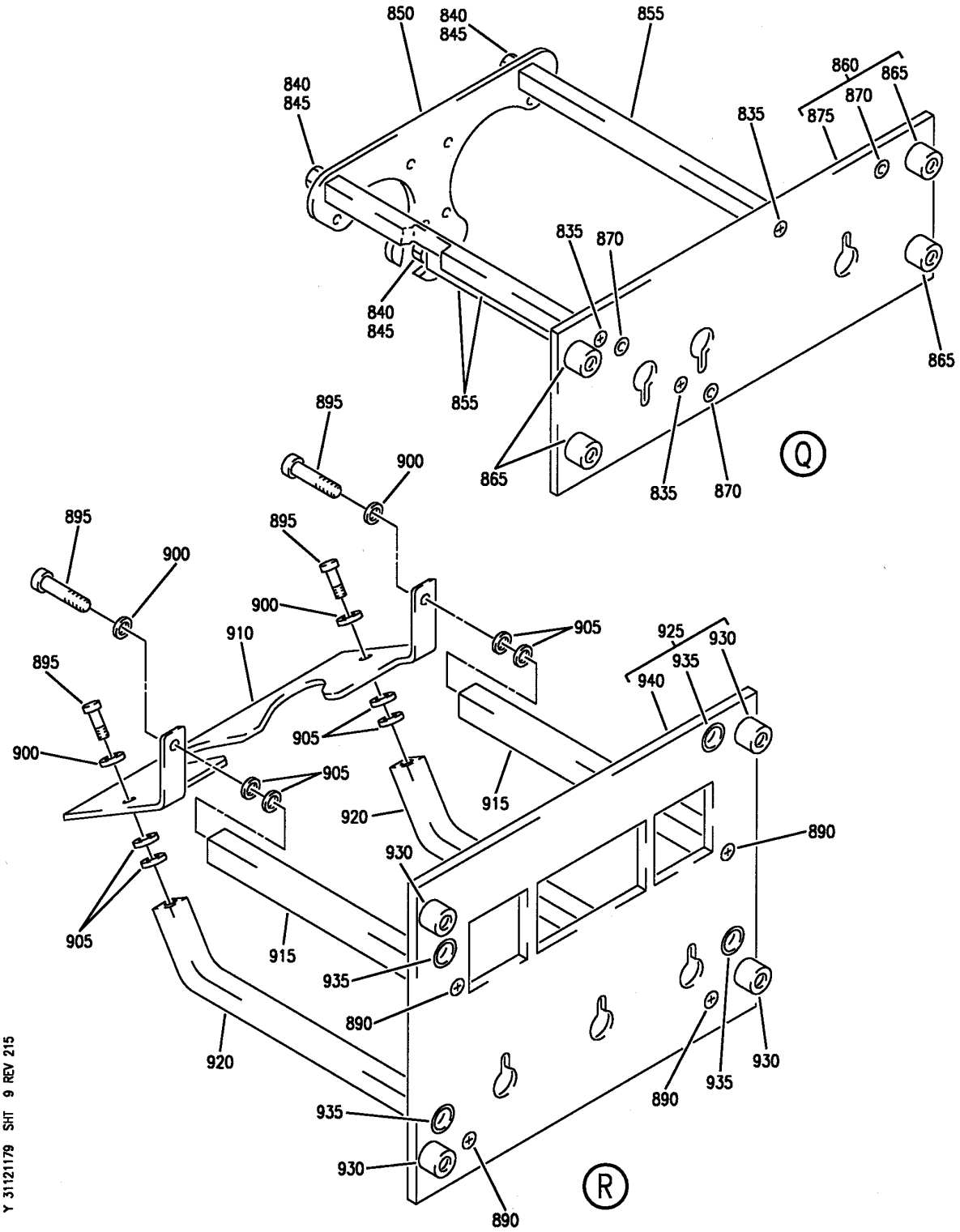

PANEL INSTL-P5 OVHD (INDICATING/RECORDING SYSTEMS ONLY)
FIGURE 79 (SHEET 9)

BOEING PROPRIETARY - Copyright © - Unpublished Work - See title page for details.

FIG ITEM	PART NUMBER	1 2 3 4 5 6 7 NOMENCLATURE	EFFECT FROM TO	UNITS PER ASSY
79				
		PANEL INSTL-P5 OVHD (INDICATING/RECORDING SYSTEMS ONLY)	504903	
- 1	233N3103-136	PANEL INSTL-P5 OVHD (INDICATING/RECORDING SYSTEMS ONLY) FOR NHA/OTHER SYS DET SEE: 25-10-00-15E	504903	RF
5	233N3227-300	.PANEL ASSY-CAPT DOME LIGHT OVERRIDE SUPPLIER CODE: V89954 ELECTRICAL EQUIP NUMBER: M10653 COMPONENT MAINT MANUAL REF: 33-11-14 QUALIFIED I/W DATA: THE 233N3227-300 PANEL ASSY IS I/W THE 233N3227-6 PANEL ASSY T/W THE S233T100-6051 LIGHTPLATE AND RD241-119 KNOB. FOR OTHER SYS DETAILS SEE: 33-11-51-17 33-13-01-23	504903	1
- 10	233N3227-6	..PANEL ASSY- SUPPLIER CODE: V89954 COMPONENT MAINT MANUAL REF: 33-11-14 QUALIFIED I/W DATA: THE 233N3227-300 PANEL ASSY IS I/W THE 233N3227-6 PANEL ASSY T/W THE S233T100-6051 LIGHTPLATE AND RD241-119 KNOB.	504903	RF
15	NAS514P632-5	...SCREW	504903	3
20	BACS12CB06-5	...SCREW	504903	3
25	MS35338-41	...WASHER	504903	3
30	233N3250-23	...BRACKET	504903	1
35	69B46200-5	...STANDOFF	504903	3
40	233N3227-2	...BASEPLATE ASSY- SUPPLIER CODE: V89954	504903	1

MISSING ITEM NUMBERS NOT APPLICABLE

- ITEM NOT ILLUSTRATED

BOEING PROPRIETARY - Copyright © - Unpublished Work - See title page for details.

FIG ITEM	PART NUMBER	1 2 3 4 5 6 7 NOMENCLATURE	EFFECT FROM TO	UNITS PER ASSY
79				
45	BACS21DD1B	....STUD ASSY SUPPLIER CODE: V08524 SPECIFICATION NUMBER: BACS21DD1B	504903	4
50	SF6G6CBB5D	....NUT SUPPLIER CODE: V12324 SPECIFICATION NUMBER: BACN10PA06-6	504903	2
55	233N3227-3	....BASEPLATE- SUPPLIER CODE: V89954	504903	1
60	CG1093AD01	.PANEL ASSY-IRS MODE SELECT SUPPLIER CODE: V94580 SPECIFICATION NUMBER: S242T101-203 ELECTRICAL EQUIP NUMBER: M00059 COMPONENT MAINT MANUAL REF: 34-21-21 QUALIFIED I/W DATA: CG1093AD01 I/W CG1093AC01 EXCEPT CG1093AD01 DISPLAYS IRU MAINTENANCE CODES AND THE TIME REMAINING IN ALIGNMENT CG1093AD01 I/W CG1093AD02 EXCEPT CG1093AD01 DISPLAYS IRU MAINTENANCE CODES AND THE TIME REMAINING IN ALIGNMENT S242T101-206/CG1093AD03 CAN REPLACE AND BE REPLACED BY S242T101-203/CG1093AD01 EXCEPT FOR NL001-NL999, NU701-NU999 FOR 757, AND VQ001-VQ999 FOR 767, WHERE S242T101-206/CG1093AD03 MUST BE USED. FOR BREAKDOWN SEE: 34-21-02-01	504903	RF

MISSING ITEM NUMBERS NOT APPLICABLE

– ITEM NOT ILLUSTRATED

BOEING PROPRIETARY - Copyright © - Unpublished Work - See title page for details.

FIG ITEM	PART NUMBER	1 2 3 4 5 6 7 NOMENCLATURE	EFFECT FROM TO	UNITS PER ASSY
79				
65	233N3216-300	.PANEL ASSY-YAW DAMPER SUPPLIER CODE: V89954 ELECTRICAL EQUIP NUMBER: M10250 COMPONENT MAINT MANUAL REF: 22-21-71 QUALIFIED I/W DATA: THE 233N3216-300 PANEL ASSY IS I/W THE 233N3216-20 PANEL ASSY T/W THE S233T100-1075 LIGHTPLATE PRE ALERT SB: 33A0044 FOR OTHER SYS DETAILS SEE: 22-21-01-04 33-13-01-23	504903	1
65	233N3216-1300	.PANEL ASSY-YAW DAMPER SUPPLIER CODE: V89954 ELECTRICAL EQUIP NUMBER: M10250 COMPONENT MAINT MANUAL REF: 22-21-71 POST ALERT SB: 33A0044 FOR OTHER SYS DETAILS SEE: 22-21-01-04 33-13-01-23	504903	1
R R R R R R R 65	233N3216-309	.PANEL ASSY-YAW DAMPER SUPPLIER CODE: V89954 ELECTRICAL EQUIP NUMBER: M10250 COMPONENT MAINT MANUAL REF: 22-21-71	504903	1

MISSING ITEM NUMBERS NOT APPLICABLE

– ITEM NOT ILLUSTRATED

BOEING PROPRIETARY - Copyright © - Unpublished Work - See title page for details.

FIG ITEM	PART NUMBER	1 2 3 4 5 6 7 NOMENCLATURE	EFFECT FROM TO	UNITS PER ASSY
79				
- 70	233N3216-20	..PANEL ASSY- SUPPLIER CODE: V89954 MISCELLANEOUS DATA: FOR SPARES PROCURE NEXT HIGHER ASSY COMPONENT MAINT MANUAL REF: 22-21-71 QUALIFIED I/W DATA: THE 233N3216-300 PANEL ASSY IS I/W THE 233N3216-20 PANEL ASSY T/W THE S233T100-1075 LIGHTPLATE PRE ALERT SB: 33A0044	504903	RF
- 70	233N3216-1020	..PANEL ASSY- SUPPLIER CODE: V89954 COMPONENT MAINT MANUAL REF: 22-21-71 POST ALERT SB: 33A0044	504903	RF
- 70	233N3216-35	..PANEL ASSY- SUPPLIER CODE: V89954 MISCELLANEOUS DATA: FOR SPARES PROCURE NEXT HIGHER ASSY ELECTRICAL EQUIP NUMBER: M10250 COMPONENT MAINT MANUAL REF: 22-21-71	504903	1
75	NAS514P632-5	...SCREW- USED ON: 233N3216-20 233N3216-1020	504903	3
75	FH6C5CPL12BN	...SCREW- SUPPLIER CODE: V12324 USED ON: 233N3216-35	504903	3
80	NAS1801-06-5	...SCREW- USED ON: 233N3216-20 233N3216-1020	504903	3
80	BACS12CK06U5	...SCREW- USED ON: 233N3216-35	504903	3

MISSING ITEM NUMBERS NOT APPLICABLE

- ITEM NOT ILLUSTRATED

BOEING PROPRIETARY - Copyright © - Unpublished Work - See title page for details.

FIG ITEM	PART NUMBER	1 2 3 4 5 6 7 NOMENCLATURE	EFFECT FROM TO	UNITS PER ASSY
79				
85	MS35338-41	...WASHER-	504903	3
		USED ON:		
		233N3216-20		
		233N3216-1020		
85	BACW10EC06C	...WASHER-	504903	3
		USED ON:		
		233N3216-35		
90	233N3250-15	...BRACKET	504903	1
95	69B46200-12	...STANDOFF	504903	3
100	233N3216-2	...BASEPLATE ASSY-	504903	1
		SUPPLIER CODE:		
		V89954		
105	PFSC35-38ASEMB	....STUD ASSY-	504903	4
		SUPPLIER CODE:		
		V72794		
		SPECIFICATION NUMBER:		
		BACS21DX1B		
110	SF6G6CBB5D	....NUT	504903	2
		SUPPLIER CODE:		
		V12324		
		SPECIFICATION NUMBER:		
		BACN10PA06-6		
115	233N3216-3	....BASEPLATE-	504903	1
		SUPPLIER CODE:		
		V89954		
120	BACP10U0112T	.PANEL ASSY	504903	2
125	233N3205-302	.PANEL ASSY-HYDR	504903	1
		SUPPLIER CODE:		
		V89954		
		ELECTRICAL EQUIP NUMBER:		
		M10050		
		COMPONENT MAINT MANUAL REF:		
		29-00-71		
		QUALIFIED I/W DATA:		
		233N3205-302 PANEL ASSY		
		IS I/W 233N3205-27 PANEL		
		ASSY T/W S233T100-6060		
		LIGHTPLATE		
		FOR OTHER SYS DETAILS SEE:		
		29-11-52-07		
		29-11-02-03		
		29-11-05-04		
		29-31-00-01		
		29-32-51-03		
		29-33-52-03		
		33-13-01-23		

MISSING ITEM NUMBERS NOT APPLICABLE

– ITEM NOT ILLUSTRATED

BOEING PROPRIETARY - Copyright © - Unpublished Work - See title page for details.

FIG ITEM	PART NUMBER	1 2 3 4 5 6 7 NOMENCLATURE	EFFECT FROM TO	UNITS PER ASSY
79				
- 130	233N3205-27	..PANEL ASSY- SUPPLIER CODE: V89954 COMPONENT MAINT MANUAL REF: 29-00-71 QUALIFIED I/W DATA: 233N3205-302 PANEL ASSY IS I/W 233N3205-27 PANEL ASSY T/W S233T100-6060 LIGHTPLATE	504903	RF
135	NAS514P632-5	...SCREW	504903	4
140	NAS1801-06-5	...SCREW- OPTIONAL PART: BACS12HN06-5	504903	4
140	BACS12HN06-5	...SCREW- OPTIONAL PART: NAS1801-06-5	504903	4
145	MS35338-41	...WASHER- OPTIONAL PART: BACW10EC06S	504903	4
145	BACW10EC06S	...WASHER- OPTIONAL PART: MS35338-41	504903	4
150	233N3250-8	...BRACKET	504903	1
155	69B46200-11	...STANDOFF	504903	4
160	233N3205-30	...BASEPLATE ASSY- SUPPLIER CODE: V89954	504903	1
165	SF6G6CBB5D	....NUT SUPPLIER CODE: V12324 SPECIFICATION NUMBER: BACN10PA06-6	504903	3
170	BACP10U0600T	....PANEL ASSY	504903	1
175	233T3255-300	.MODULE ASSY- SUPPLIER CODE: V89954 ELECTRICAL EQUIP NUMBER: M06763 COMPONENT MAINT MANUAL REF: 23-71-01 FOR OTHER SYS DETAILS SEE: 23-71-05-02 33-13-01-23	504903	1
- 180	233T3255-1	..MODULE ASSY- SUPPLIER CODE: V89954 COMPONENT MAINT MANUAL REF: 23-71-01	504903	RF

MISSING ITEM NUMBERS NOT APPLICABLE

- ITEM NOT ILLUSTRATED

BOEING PROPRIETARY - Copyright © - Unpublished Work - See title page for details.

FIG ITEM	PART NUMBER	1 2 3 4 5 6 7 NOMENCLATURE	EFFECT FROM TO	UNITS PER ASSY
79				
185	FH6C6CPL12BN	...SCREW-	504903	3
		SUPPLIER CODE:		
		V12324		
190	MS24693C273	...SCREW-	504903	1
195	MS51957-27	...SCREW	504903	3
200	AN960D416	...WASHER	504903	1
205	MS35338-136	...WASHER	504903	3
210	MS35650-305T	...NUT	504903	1
215	BRH10C3D	...NUT	504903	1
		SUPPLIER CODE:		
		V52828		
		SPECIFICATION NUMBER:		
		BACN10JC3CD		
		OPTIONAL PART:		
		T6C1032JCD		
		V11815		
		NS202486-02		
		V80539		
		102LH9075-3W		
		V72962		
		H51650-3BAC		
		V15653		
220	233T6200-226	...BRACKET-SPRT	504903	1
225	69B46200-9	...STANDOFF	504903	3
230	233T3255-2	...BASEPLATE ASSY-	504903	1
		SUPPLIER CODE:		
		V89954		
235	PFSC35-38ASEMB	....STUD ASSY	504903	3
		SUPPLIER CODE:		
		V72794		
		SPECIFICATION NUMBER:		
		BACS21DX1B		
240	SF6CG6CBB5D	....NUT-	504903	2
		SUPPLIER CODE:		
		V12324		
245	233T3200-4	....BASEPLATE	504903	1

MISSING ITEM NUMBERS NOT APPLICABLE

– ITEM NOT ILLUSTRATED

BOEING PROPRIETARY - Copyright © - Unpublished Work - See title page for details.

FIG ITEM	PART NUMBER	1 2 3 4 5 6 7 NOMENCLATURE	EFFECT FROM TO	UNITS PER ASSY
79				
250	233N3202-15	.PANEL ASSY-ANN. LIGHTS	504903	1
		SUPPLIER CODE:		
		V89954		
		NOT APPROVED FOR ETOPS.		
		ELECTRICAL EQUIP NUMBER:		
		M10394		
		COMPONENT MAINT MANUAL REF:		
		33-16-71		
		FOR OTHER SYS DETAILS SEE:		
		22-24-51-02		
		27-21-53-02		
		27-41-55-01		
		27-61-51-03		
		27-62-52-02		
		30-31-51-02		
		30-32-51-01		
		30-33-51-02		
		32-42-52-03		
		52-71-51-02		
255	NAS514P632-5	..SCREW	504903	3
260	BACS12CB06-5	..SCREW	504903	3
265	MS35338-41	..WASHER	504903	3
270	233N3250-7	..BRACKET	504903	1
275	69B46200-10	..STANDOFF	504903	3
280	233N3202-2	..BASEPLATE ASSY-	504903	1
		SUPPLIER CODE:		
		V89954		
285	BACS21DD1B	...STUD ASSY	504903	4
		SUPPLIER CODE:		
		V08524		
		SPECIFICATION NUMBER:		
		BACS21DD1B		
290	BACP10U0225T	.PANEL	504903	1
295	622-6827-002	.PANEL ASSY-HF COMM CONT	504903	RF
		(CUSTOMER FURNISHED)		
		SUPPLIER CODE:		
		V4V792		
		POSITION DATA:		
		L		
		ELECTRICAL EQUIP NUMBER:		
		M00082		
		COMPONENT MAINT MANUAL REF:		
		23-10-73		
		FOR BREAKDOWN SEE:		
		23-11-02-01		

MISSING ITEM NUMBERS NOT APPLICABLE

– ITEM NOT ILLUSTRATED

BOEING PROPRIETARY - Copyright © - Unpublished Work - See title page for details.

FIG ITEM	PART NUMBER	1 2 3 4 5 6 7 NOMENCLATURE	EFFECT FROM TO	UNITS PER ASSY
79				
295	622-5432-002	.PANEL ASSY-HF CONT (CUSTOMER FURNISHED) SUPPLIER CODE: V4V792 POSITION DATA: L ELECTRICAL EQUIP NUMBER: M00082 COMPONENT MAINT MANUAL REF: 23-10-71 FOR BREAKDOWN SEE: 23-11-02-01	504903	RF
300	BACP10U0037T	.PANEL ASSY	504903	1
305	233T3242-301	.PANEL ASSY-EEC CONT SUPPLIER CODE: V89954 ELECTRICAL EQUIP NUMBER: M10761 COMPONENT MAINT MANUAL REF: 73-21-86 QUALIFIED I/W DATA: 233T3242-301 PANEL ASSY IS I/W 233T3242-6 PANEL ASSY T/W S233T100-1092 LIGHTPLATE PRE ALERT SB: 33A0044 FOR OTHER SYS DETAILS SEE: 33-13-01-23 73-21-52-02	504903	1
305	233T3242-1301	.PANEL ASSY-EEC CONT SUPPLIER CODE: V89954 ELECTRICAL EQUIP NUMBER: M10761 COMPONENT MAINT MANUAL REF: 73-21-86 POST ALERT SB: 33A0044 FOR OTHER SYS DETAILS SEE: 33-13-01-23 73-21-52-02	504903	1

MISSING ITEM NUMBERS NOT APPLICABLE

– ITEM NOT ILLUSTRATED

BOEING PROPRIETARY - Copyright © - Unpublished Work - See title page for details.

FIG ITEM	PART NUMBER	1 2 3 4 5 6 7 NOMENCLATURE	EFFECT FROM TO	UNITS PER ASSY
79				
- 310	233T3242-6	..PANEL ASSY- SUPPLIER CODE: V89954 COMPONENT MAINT MANUAL REF: 73-21-86 QUALIFIED I/W DATA: 233T3242-301 PANEL ASSY IS I/W 233T3242-6 PANEL ASSY T/W S233T100-1092 LIGHTPLATE PRE ALERT SB: 33A0044	504903	RF
- 310	233T3242-1006	..PANEL ASSY- SUPPLIER CODE: V89954 COMPONENT MAINT MANUAL REF: 73-21-86 POST ALERT SB: 33A0044	504903	RF
315	NAS514P632-5P	...SCREW	504903	3
320	BACS12CK06U5	...SCREW-	504903	3
325	BACW10EC06C	...WASHER-	504903	3
330	233T6200-142	...BRACKET	504903	1
335	69B46200-12	...STANDOFF	504903	3
340	233T3242-2	...BASEPLATE ASSY- SUPPLIER CODE: V89954	504903	1
345	PFSC35-38ASEMB	....STUD ASSY SUPPLIER CODE: V72794 SPECIFICATION NUMBER: BACS21DX1B	504903	4
350	SF6G6CBB5D	....NUT- SUPPLIER CODE: V12324	504903	2
355	BACP10U0187N	....BASEPLATE	504903	1

MISSING ITEM NUMBERS NOT APPLICABLE

- ITEM NOT ILLUSTRATED

BOEING PROPRIETARY - Copyright © - Unpublished Work - See title page for details.

FIG ITEM	PART NUMBER	1 2 3 4 5 6 7 NOMENCLATURE	EFFECT FROM TO	UNITS PER ASSY
79				
360	233N3211-303	.PANEL ASSY-BATTERY/STBY PWR SUPPLIER CODE: V89954 ELECTRICAL EQUIP NUMBER: M10062 COMPONENT MAINT MANUAL REF: 24-33-72 QUALIFIED I/W DATA: THE 233N3211-303 PANEL ASSY IS I/W THE 233N3211-40 PANEL ASSY T/W THE S233T100-1081 LIGHTPLATE AND BP248-127 KNOB P/N 233N3211-303 IS FULLY I/W P/N 233N3211-308, EXCEPT ONE-WAY FORWARD FOR U/O 233N3103-121, -122, -21 -22 PRE ALERT SB: 33A0044 FOR OTHER SYS DETAILS SEE: 24-31-01-10 24-31-03-09 24-33-04-01 33-13-01-23	504903	1
360	233N3211-1303	.PANEL ASSY-BATTERY/STBY PWR SUPPLIER CODE: V89954 ELECTRICAL EQUIP NUMBER: M10062 COMPONENT MAINT MANUAL REF: 24-33-72 POST ALERT SB: 33A0044 FOR OTHER SYS DETAILS SEE: 24-31-01-10 24-31-03-09 24-33-04-01 33-13-01-23	504903	1

MISSING ITEM NUMBERS NOT APPLICABLE

– ITEM NOT ILLUSTRATED

BOEING PROPRIETARY - Copyright © - Unpublished Work - See title page for details.

FIG ITEM	PART NUMBER	1 2 3 4 5 6 7 NOMENCLATURE	EFFECT FROM TO	UNITS PER ASSY
79				
- 365	233N3211-40	..PANEL ASSY- SUPPLIER CODE: V89954 COMPONENT MAINT MANUAL REF: 24-33-72 QUALIFIED I/W DATA: THE 233N3211-303 PANEL ASSY IS I/W THE 233N3211-40 PANEL ASSY T/W THE S233T100-1081 LIGHTPLATE AND BP248-127 KNOB PRE ALERT SB: 33A0044	504903	RF
- 365	233N3211-1040	..PANEL ASSY- SUPPLIER CODE: V89954 COMPONENT MAINT MANUAL REF: 24-33-72 POST ALERT SB: 33A0044	504903	RF
370	NAS514P632-5	...SCREW	504903	3
375	NAS1801-06-5	...SCREW	504903	3
380	MS35338-41	...WASHER	504903	3
385	233N3250-5	...BRACKET	504903	1
390	69B46200-17	...STANDOFF	504903	3
395	233N3211-49	...BASEPLATE ASSY- SUPPLIER CODE: V89954	504903	1
400	PFSC35-38ASEMB	....STUD ASSY SUPPLIER CODE: V72794 SPECIFICATION NUMBER: BACS21DX1B	504903	4
405	SF6G6CBB5D	....NUT- SUPPLIER CODE: V12324	504903	2
410	BACP10U0225NC	....PANEL ASSY-	504903	1

MISSING ITEM NUMBERS NOT APPLICABLE

- ITEM NOT ILLUSTRATED

BOEING PROPRIETARY - Copyright © - Unpublished Work - See title page for details.

FIG ITEM	PART NUMBER	1 2 3 4 5 6 7 NOMENCLATURE	EFFECT FROM TO	UNITS PER ASSY
79				
415	233N3209-305	.PANEL ASSY-E/E SUPPLIER CODE: V89954 ELECTRICAL EQUIP NUMBER: M10063 COMPONENT MAINT MANUAL REF: 24-22-71 PRE ALERT SB: 33A0044 FOR OTHER SYS DETAILS SEE: 24-11-52-05 24-22-01-03 24-41-51-04 24-51-62-01 33-13-01-23	504903	1
415	233N3209-1305	.PANEL ASSY-E/E SUPPLIER CODE: V89954 ELECTRICAL EQUIP NUMBER: M10063 COMPONENT MAINT MANUAL REF: 24-22-71 POST ALERT SB: 33A0044 FOR OTHER SYS DETAILS SEE: 24-11-52-05 24-22-01-03 24-41-51-04 24-51-62-01 33-13-01-23	504903	1
415	233N3209-314	.PANEL ASSY-E/E SUPPLIER CODE: V89954 ELECTRICAL EQUIP NUMBER: M10063 COMPONENT MAINT MANUAL REF: 24-22-71 FOR OTHER SYS DETAILS SEE: 24-11-52-05 24-22-01-03 24-41-51-04 24-51-62-01 33-13-01-23	504903	1

MISSING ITEM NUMBERS NOT APPLICABLE

– ITEM NOT ILLUSTRATED

BOEING PROPRIETARY - Copyright © - Unpublished Work - See title page for details.

FIG ITEM	PART NUMBER	1 2 3 4 5 6 7 NOMENCLATURE	EFFECT FROM TO	UNITS PER ASSY
79				
- 420	233N3209-41	..PANEL ASSY- SUPPLIER CODE: V89954 MISCELLANEOUS DATA: FOR SPARES PROCURE THE NEXT HIGHER ASSY COMPONENT MAINT MANUAL REF: 24-22-71 USED ON: 233N3209-305 PRE ALERT SB: 33A0044	504903	RF
- 420	233N3209-1041	..PANEL ASSY- SUPPLIER CODE: V89954 COMPONENT MAINT MANUAL REF: 24-22-71 POST ALERT SB: 33A0044	504903	RF
420	233N3209-50	..PANEL ASSY- SUPPLIER CODE: V89954 ELECTRICAL EQUIP NUMBER: M10063 COMPONENT MAINT MANUAL REF: 24-22-71 USED ON: 233N3209-314	504903	RF
425	NAS514P632-5	...SCREW- USED ON: 233N3209-41 233N3209-1041	504903	4
425	FH6C5TPKL12BN	...SCREW- SUPPLIER CODE: V12324 USED ON: 233N3209-50	504903	4
430	NAS1801-06-5	...SCREW- USED ON: 233N3209-41 233N3209-1041	504903	4
430	BACS12HN06-5	...SCREW- USED ON: 233N3209-50	504903	4
435	MS35338-41	...WASHER- USED ON: 233N3209-41 233N3209-1041	504903	4

MISSING ITEM NUMBERS NOT APPLICABLE

- ITEM NOT ILLUSTRATED

BOEING PROPRIETARY - Copyright © - Unpublished Work - See title page for details.

FIG ITEM	PART NUMBER	1 2 3 4 5 6 7 NOMENCLATURE	EFFECT FROM TO	UNITS PER ASSY
79				
435	BACW10EC06S	...WASHER-	504903	4
		USED ON:		
		233N3209-50		
440	233N3209-6	...BRACKET ASSY-	504903	RF
		SUPPLIER CODE:		
		V89954		
450	69B46200-12	...STANDOFF	504903	4
455	233N3209-2	...BASEPLATE ASSY-	504903	1
		SUPPLIER CODE:		
		V89954		
460	PFSC35-38ASEMB	....STUD ASSY-	504903	4
		SUPPLIER CODE:		
		V72794		
		SPECIFICATION NUMBER:		
		BACS21DX1B		
465	SF6G6CBB5D	....NUT	504903	4
		SUPPLIER CODE:		
		V12324		
		SPECIFICATION NUMBER:		
		BACN10PA06-6		
470	233N3209-3	....BASEPLATE-	504903	1
		SUPPLIER CODE:		
		V89954		
475	233T3232-300	.PANEL ASSY-APU START	504903	1
		SUPPLIER CODE:		
		V89954		
		ELECTRICAL EQUIP NUMBER:		
		M00001		
		FOR OTHER SYS DETAILS SEE:		
		33-13-01-23		
		49-41-00-02		
		49-70-00-01		
475	233T3232-302	.PANEL ASSY-APU START	504903	1
		SUPPLIER CODE:		
		V89954		
		ELECTRICAL EQUIP NUMBER:		
		M00001		
		COMPONENT MAINT MANUAL REF:		
		49-61-52		
		FOR OTHER SYS DETAILS SEE:		
		33-13-01-23		
		49-41-00-02		
		49-70-00-01		

MISSING ITEM NUMBERS NOT APPLICABLE

– ITEM NOT ILLUSTRATED

BOEING PROPRIETARY - Copyright © - Unpublished Work - See title page for details.

FIG ITEM	PART NUMBER	1 2 3 4 5 6 7 NOMENCLATURE	EFFECT FROM TO	UNITS PER ASSY
79				
475	233T3232-305	.PANEL ASSY-APU START SUPPLIER CODE: V89954 ELECTRICAL EQUIP NUMBER: M00001 COMPONENT MAINT MANUAL REF: 49-61-52 FOR OTHER SYS DETAILS SEE: 33-13-01-23 49-41-00-02 49-70-00-01	504903	1
- 480	233T3232-12	..PANEL ASSY- SUPPLIER CODE: V89954 COMPONENT MAINT MANUAL REF: 49-61-52 USED ON: 233T3232-300	504903	RF
- 480	233T3232-15	..PANEL ASSY- SUPPLIER CODE: V89954 COMPONENT MAINT MANUAL REF: 49-61-52 USED ON: 233T3232-302	504903	RF
- 480	233T3232-23	..PANEL ASSY- SUPPLIER CODE: V89954 COMPONENT MAINT MANUAL REF: 49-61-52 USED ON: 233T3232-305	504903	RF
485	NAS514P632-5	...SCREW- USED ON: 233T3232-12	504903	3
485	FH6C5CPL12BN	...SCREW- SUPPLIER CODE: V12324 USED ON: 233T3232-15 233T3232-23	504903	3
490	NAS1801-06-5	...SCREW- USED ON: 233T3232-12 233T3232-15	504903	3
490	BACS12HN06-5	...SCREW- USED ON: 233T3232-23	504903	3

MISSING ITEM NUMBERS NOT APPLICABLE

- ITEM NOT ILLUSTRATED

BOEING PROPRIETARY - Copyright © - Unpublished Work - See title page for details.

FIG ITEM	PART NUMBER	1 2 3 4 5 6 7 NOMENCLATURE	EFFECT FROM TO	UNITS PER ASSY
79				
495	MS35338-41	...WASHER-	504903	3
		USED ON:		
		233T3232-12		
495	BACW10EC06S	...WASHER-	504903	3
		USED ON:		
		233T3232-15		
495	BACW10EC06CD	...WASHER-	504903	3
		USED ON:		
		233T3232-23		
500	233T6200-95	...BRACKET	504903	1
505	69B46200-12	...STANDOFF-	504903	3
		USED ON:		
		233T3232-12		
505	69B46200-11	...STANDOFF-	504903	3
		USED ON:		
		233T3232-15		
		233T3232-23		
510	233T3232-2	...BASEPLATE ASSY-	504903	1
		SUPPLIER CODE:		
		V89954		
515	BACS21DD1B	....STUD ASSY	504903	4
		SUPPLIER CODE:		
		V08524		
		SPECIFICATION NUMBER:		
		BACS21DD1B		
520	SF6G6CBB5D	....NUT	504903	2
		SUPPLIER CODE:		
		V12324		
		SPECIFICATION NUMBER:		
		BACN10PA06-6		
525	BACP10U0187N	....BASEPLATE	504903	1

MISSING ITEM NUMBERS NOT APPLICABLE

– ITEM NOT ILLUSTRATED

BOEING PROPRIETARY - Copyright © - Unpublished Work - See title page for details.

FIG ITEM	PART NUMBER	1 2 3 4 5 6 7 NOMENCLATURE	EFFECT FROM TO	UNITS PER ASSY
79				
530	980-6116-002	.PANEL ASSY-VOICE RECORDER (CUSTOMER FURNISHED) SUPPLIER CODE: V97896 ELECTRICAL EQUIP NUMBER: M00050 COMPONENT MAINT MANUAL REF: 23-70-43 QUALIFIED I/W DATA: 980-6116-002 & 980-6022-001 MAY REPLACE 93A152-60 & 5200-0012-00, BUT NOT REPLACED BY. 5200-0012-00 DOES NOT HAVE GMT RECORDING CAPABILITY REQ'D BY JAA FOR BREAKDOWN SEE: 23-71-05-02	504903	RF
535	233N3214-305	.PANEL ASSY-LIGHTING CONT SUPPLIER CODE: V89954 ELECTRICAL EQUIP NUMBER: M10056 COMPONENT MAINT MANUAL REF: 33-11-71 FOR OTHER SYS DETAILS SEE: 33-11-03-03 33-11-51-17 33-13-01-23 33-42-01-04 33-42-02-04	504903	1
- 540	233N3214-34	..PANEL ASSY- SUPPLIER CODE: V89954 COMPONENT MAINT MANUAL REF: 33-11-71	504903	RF
545	NAS514P632-5	...SCREW	504903	3
550	BACS12CB06-5	...SCREW	504903	3
555	MS35338-41	...WASHER	504903	3
560	233N3250-34	...BRACKET	504903	1
565	69B46200-14	...STANDOFF	504903	3
570	233N3214-19	...BASEPLATE ASSY- SUPPLIER CODE: V89954	504903	1

MISSING ITEM NUMBERS NOT APPLICABLE

- ITEM NOT ILLUSTRATED

BOEING PROPRIETARY - Copyright © - Unpublished Work - See title page for details.

FIG ITEM	PART NUMBER	1 2 3 4 5 6 7 NOMENCLATURE	EFFECT FROM TO	UNITS PER ASSY
79				
575	PFSC35-38ASEMB	....STUD ASSY- SUPPLIER CODE: V72794 SPECIFICATION NUMBER: BACS21DX1B	504903	3
580	SF6G6CBB5D	....NUT SUPPLIER CODE: V12324 SPECIFICATION NUMBER: BACN10PA06-6	504903	3
585	233N3214-20	....BASEPLATE- SUPPLIER CODE: V89954	504903	1
590	G6031A	.PANEL ASSY-EMER EVACUATION CONT SUPPLIER CODE: V99837 FUNCTIONAL DESCRIPTION: ALLOWS FLIGHT DECK CREW TO ACTIVATE OR TEST THE EMERGENCY EVACUATION SYSTEM. ELECTRICAL EQUIP NUMBER: M10795 FOR BREAKDOWN SEE: 25-63-51-05	504903	RF
595	233T3210-300	.PANEL ASSY-EMER LIGHTS PASS. OXY SUPPLIER CODE: V89954 ELECTRICAL EQUIP NUMBER: M00043 COMPONENT MAINT MANUAL REF: 33-51-03 QUALIFIED I/W DATA: THE 233T3210-300 PANEL ASSY IS I/W THE 233T3210-28 PANEL ASSY T/W THE S233T100-1077 LIGHTPLATE. PRE ALERT SB: 33A0044 FOR OTHER SYS DETAILS SEE: 33-13-01-23 33-51-08-05 35-21-51-04	504903	1

MISSING ITEM NUMBERS NOT APPLICABLE

— ITEM NOT ILLUSTRATED

BOEING PROPRIETARY - Copyright © - Unpublished Work - See title page for details.

FIG ITEM	PART NUMBER	1 2 3 4 5 6 7 NOMENCLATURE	EFFECT FROM TO	UNITS PER ASSY
79				
595	233T3210-306	.PANEL ASSY-EMER LIGHTS PASS. OXY SUPPLIER CODE: V89954 ELECTRICAL EQUIP NUMBER: M00043 COMPONENT MAINT MANUAL REF: 33-51-03 FOR OTHER SYS DETAILS SEE: 33-13-01-23 33-51-08-05 35-21-51-04	504903	1
595	233T3210-1300	.PANEL ASSY-EMER LIGHTS PASS. OXY SUPPLIER CODE: V89954 ELECTRICAL EQUIP NUMBER: M00043 COMPONENT MAINT MANUAL REF: 33-51-03 POST ALERT SB: 33A0044 FOR OTHER SYS DETAILS SEE: 33-13-01-23 33-51-08-05 35-21-51-04	504903	1
- 600	233T3210-28	..PANEL ASSY- SUPPLIER CODE: V89954 COMPONENT MAINT MANUAL REF: 33-51-03 QUALIFIED I/W DATA: THE 233T3210-300 PANEL ASSY IS I/W THE 233T3210-28 PANEL ASSY T/W THE S233T100-1077 LIGHTPLATE. USED ON: 233T3210-300 PRE ALERT SB: 33A0044	504903	RF
- 600	233T3210-42	..PANEL ASSY- SUPPLIER CODE: V89954 COMPONENT MAINT MANUAL REF: 33-51-03 USED ON: 233T3210-306	504903	RF

MISSING ITEM NUMBERS NOT APPLICABLE

- ITEM NOT ILLUSTRATED

BOEING PROPRIETARY - Copyright © - Unpublished Work - See title page for details.

FIG ITEM	PART NUMBER	1 2 3 4 5 6 7 NOMENCLATURE	EFFECT FROM TO	UNITS PER ASSY
79				
- 600	233T3210-1028	..PANEL ASSY-	504903	RF
		SUPPLIER CODE:		
		V89954		
		COMPONENT MAINT MANUAL REF:		
		33-51-03		
		USED ON:		
		233T3210-1300		
		POST ALERT SB:		
		33A0044		
605	NAS514P632-5	...SCREW-	504903	3
		USED ON:		
		233T3210-28		
605	FH6C5CPL12BN	...SCREW-	504903	3
		SUPPLIER CODE:		
		V12324		
		USED ON:		
		233T3210-42		
610	NAS1801-06-5	...SCREW-	504903	3
		USED ON:		
		233T3210-28		
610	BACS12CK06U5	...SCREW-	504903	3
		USED ON:		
		233T3210-42		
615	MS35338-41	...WASHER-	504903	3
		USED ON:		
		233T3210-28		
615	BACW10EC06C	...WASHER-	504903	3
		USED ON:		
		233T3210-42		
620	233T6200-82	...BRACKET	504903	1
625	69B46200-10	...STANDOFF	504903	3
630	233T3210-17	...BASEPLATE ASSY-	504903	1
		SUPPLIER CODE:		
		V89954		
635	BACS21DD1B	....STUD ASSY	504903	4
		SUPPLIER CODE:		
		V08524		
		SPECIFICATION NUMBER:		
		BACS21DD1B		
640	SF6G6CBB5D	....NUT	504903	2
		SUPPLIER CODE:		
		V12324		
		SPECIFICATION NUMBER:		
		BACN10PA06-6		
645	BACP10U0225N	....PANEL	504903	1

MISSING ITEM NUMBERS NOT APPLICABLE

– ITEM NOT ILLUSTRATED

BOEING PROPRIETARY - Copyright © - Unpublished Work - See title page for details.

FIG ITEM	PART NUMBER	1 2 3 4 5 6 7 NOMENCLATURE	EFFECT FROM TO	UNITS PER ASSY
79				
650	233N3223-302	.PANEL ASSY-ENG START/RAT SUPPLIER CODE: V89954 ELECTRICAL EQUIP NUMBER: M10468 QUALIFIED I/W DATA: THE 233N3223-302 PANEL ASSY IS I/W THE 233N3223-50 PANEL ASSY T/W THE S233T100-6046 LIGHTPLATE AND (3) BP248-127 KNOBS. PRE ALERT SB: 33A0044 FOR OTHER SYS DETAILS SEE: 33-13-01-23 29-21-54-03 73-21-52-02 74-31-51-05 80-11-09-02	504903	1
650	233N3223-1302	.PANEL ASSY-ENG START/RAT SUPPLIER CODE: V89954 ELECTRICAL EQUIP NUMBER: M10468 POST ALERT SB: 33A0044 FOR OTHER SYS DETAILS SEE: 33-13-01-23 29-21-54-03 73-21-52-02 74-31-51-05 80-11-09-02	504903	1
- 655	233N3223-50	..PANEL ASSY- SUPPLIER CODE: V89954 COMPONENT MAINT MANUAL REF: 31-12-01 QUALIFIED I/W DATA: THE 233N3223-302 PANEL ASSY IS I/W THE 233N3223-50 PANEL ASSY T/W THE S233T100-6046 LIGHTPLATE AND (3) BP248-127 KNOBS. PRE ALERT SB: 33A0044	504903	RF

MISSING ITEM NUMBERS NOT APPLICABLE

- ITEM NOT ILLUSTRATED

BOEING PROPRIETARY - Copyright © - Unpublished Work - See title page for details.

FIG ITEM	PART NUMBER	1 2 3 4 5 6 7 NOMENCLATURE	EFFECT FROM TO	UNITS PER ASSY
79				
- 655	233N3223-1050	..PANEL ASSY-	504903	RF
		SUPPLIER CODE:		
		V89954		
		COMPONENT MAINT MANUAL REF:		
		31-12-01		
		POST ALERT SB:		
		33A0044		
660	NAS514P632-5	...SCREW	504903	3
665	NAS1801-06-5	...SCREW	504903	3
670	MS35338-41	...WASHER	504903	3
675	233N3223-4	...BRACKET ASSY-	504903	RF
		SUPPLIER CODE:		
		V89954		
685	69B46200-13	...STANDOFF	504903	3
690	233N3223-8	...BASEPLATE ASSY-	504903	1
		SUPPLIER CODE:		
		V89954		
695	PFSC35-38ASEMB	....STUD ASSY-	504903	4
		SUPPLIER CODE:		
		V72794		
		SPECIFICATION NUMBER:		
		BACS21DX1B		
700	SF6G6CBB5D	....NUT	504903	4
		SUPPLIER CODE:		
		V12324		
		SPECIFICATION NUMBER:		
		BACN10PA06-6		
705	233N3223-9	....BASEPLATE-	504903	1
		SUPPLIER CODE:		
		V89954		

MISSING ITEM NUMBERS NOT APPLICABLE

- ITEM NOT ILLUSTRATED

BOEING PROPRIETARY - Copyright © - Unpublished Work - See title page for details.

FIG ITEM	PART NUMBER	1 2 3 4 5 6 7 NOMENCLATURE	EFFECT FROM TO	UNITS PER ASSY
79				
710	233N3206-300	.PANEL ASSY-FUEL CONT SUPPLIER CODE: V89954 ELECTRICAL EQUIP NUMBER: M10055 COMPONENT MAINT MANUAL REF: 28-41-71 QUALIFIED I/W DATA: THE 233N3206-300 PANEL ASSY IS I/W THE 233N3206-19 PANEL ASSY T/W THE S233T100-1106 LIGHTPLATE PRE ALERT SB: 28A0105R1 PRE COMPONENT SB: 233N3206-28-03 FOR OTHER SYS DETAILS SEE: 28-22-51-02 28-41-51-03 33-13-01-23	504903	1
710	233N3206-3300	.PANEL ASSY-FUEL CONT SUPPLIER CODE: V89954 ELECTRICAL EQUIP NUMBER: M10055 COMPONENT MAINT MANUAL REF: 28-41-71 POST ALERT SB: 28A0105R1 POST COMPONENT SB: 233N3206-28-03 FOR OTHER SYS DETAILS SEE: 28-22-51-02 28-41-51-03 33-13-01-23	504903	1

MISSING ITEM NUMBERS NOT APPLICABLE

– ITEM NOT ILLUSTRATED

BOEING PROPRIETARY - Copyright © - Unpublished Work - See title page for details.

FIG ITEM	PART NUMBER	1 2 3 4 5 6 7 NOMENCLATURE	EFFECT FROM TO	UNITS PER ASSY
79				
- 715	233N3206-19	..PANEL ASSY- SUPPLIER CODE: V89954 COMPONENT MAINT MANUAL REF: 28-41-71 QUALIFIED I/W DATA: THE 233N3206-300 PANEL ASSY IS I/W THE 233N3206-19 PANEL ASSY T/W THE S233T100-1106 LIGHTPLATE PRE ALERT SB: 28A0105R1 PRE COMPONENT SB: 233N3206-28-03	504903	RF
- 715	233N3206-3019	..PANEL ASSY- SUPPLIER CODE: V89954 COMPONENT MAINT MANUAL REF: 28-41-71 POST ALERT SB: 28A0105R1 POST COMPONENT SB: 233N3206-28-03	504903	RF
720	NAS514P632-5	...SCREW	504903	4
725	BACS12HN06-5	...SCREW-	504903	4
730	BACW10EC06S	...WASHER-	504903	4
735	233N3250-64	...BRACKET	504903	1
740	69B46200-11	...STANDOFF	504903	4
745	233T3235-18	...BASEPLATE ASSY- SUPPLIER CODE: V89954	504903	1
750	PFSC35-38ASEMB	....STUD ASSY SUPPLIER CODE: V72794 SPECIFICATION NUMBER: BACS21DX1B	504903	4
755	SF6G6CBB5D	....NUT- SUPPLIER CODE: V12324	504903	4
760	BACP10U0412N	....BASEPLATE	504903	1

MISSING ITEM NUMBERS NOT APPLICABLE

- ITEM NOT ILLUSTRATED

BOEING PROPRIETARY - Copyright © - Unpublished Work - See title page for details.

FIG ITEM	PART NUMBER	1 2 3 4 5 6 7 NOMENCLATURE	EFFECT FROM TO	UNITS PER ASSY
79				
765	10080-0101	.INDICATOR ASSY-INTERGRATED FUEL QTY SUPPLIER CODE: V89305 SPECIFICATION NUMBER: S345N001-001 ELECTRICAL EQUIP NUMBER: M10054 COMPONENT MAINT MANUAL REF: 28-42-08 OPTIONAL PART: 10080-0201 V89305 FOR BREAKDOWN SEE: 28-41-04-01	504903	RF
765	10080-0201	.INDICATOR ASSY-INTERGRATED FUEL QTY SUPPLIER CODE: V89305 FUNCTIONAL DESCRIPTION: MODULE DISPLAYS INDIVIDUAL TANK QUANTITY, TOTAL QUANTITY & TEMPERATURE OF MAIN TANK SPECIFICATION NUMBER: S345N001-001 ELECTRICAL EQUIP NUMBER: M10054 COMPONENT MAINT MANUAL REF: 28-42-08 OPTIONAL PART: 10080-0101 V89305 FOR BREAKDOWN SEE: 28-41-04-01	504903	RF

MISSING ITEM NUMBERS NOT APPLICABLE

– ITEM NOT ILLUSTRATED

BOEING PROPRIETARY - Copyright © - Unpublished Work - See title page for details.

FIG ITEM	PART NUMBER	1 2 3 4 5 6 7 NOMENCLATURE	EFFECT FROM TO	UNITS PER ASSY
79				
770	233N3204-301	.PANEL ASSY-ANTI-ICE SUPPLIER CODE: V89954 ELECTRICAL EQUIP NUMBER: M10397 COMPONENT MAINT MANUAL REF: 30-11-72 QUALIFIED I/W DATA: 233N3204-301 PANEL ASSY IS I/W 233N3204-20 PANEL ASSY T/W S233T100-1070 LIGHTPLATE OPTIONAL PART: 233N3204-300 V89954 PRE ALERT SB: 33A0044 FOR OTHER SYS DETAILS SEE: 30-11-51-03 30-21-51-03 33-13-01-23	504903	1
770	233N3204-300	.PANEL ASSY-ANTI-ICE SUPPLIER CODE: V89954 ELECTRICAL EQUIP NUMBER: M10397 COMPONENT MAINT MANUAL REF: 30-11-72 QUALIFIED I/W DATA: 233N3204-300 PANEL ASSY IS I/W 233N3204-19 PANEL ASSY T/W S233T100-1070 LIGHTPLATE OPTIONAL PART: 233N3204-301 V89954 PRE ALERT SB: 33A0044 FOR OTHER SYS DETAILS SEE: 30-11-51-03 30-21-51-03 33-13-01-23	504903	1

MISSING ITEM NUMBERS NOT APPLICABLE

– ITEM NOT ILLUSTRATED

BOEING PROPRIETARY - Copyright © - Unpublished Work - See title page for details.

FIG ITEM	PART NUMBER	1 2 3 4 5 6 7 NOMENCLATURE	EFFECT FROM TO	UNITS PER ASSY
79				
770	233N3204-1301	.PANEL ASSY-ANTI-ICE SUPPLIER CODE: V89954 ELECTRICAL EQUIP NUMBER: M10397 COMPONENT MAINT MANUAL REF: 30-11-72 POST ALERT SB: 33A0044 FOR OTHER SYS DETAILS SEE: 30-11-51-03 30-21-51-03 33-13-01-23	504903	1
770	233N3204-1300	.PANEL ASSY-ANTI-ICE SUPPLIER CODE: V89954 ELECTRICAL EQUIP NUMBER: M10397 COMPONENT MAINT MANUAL REF: 30-11-72 POST ALERT SB: 33A0044	504903	1
770	233N3204-332	.PANEL ASSY-ANTI-ICE SUPPLIER CODE: V89954 ELECTRICAL EQUIP NUMBER: M10397 COMPONENT MAINT MANUAL REF: 30-11-72 FOR OTHER SYS DETAILS SEE: 30-11-51-03 30-21-51-03 33-13-01-23	504903	1
- 775	233N3204-20	..PANEL ASSY- SUPPLIER CODE: V89954 COMPONENT MAINT MANUAL REF: 30-11-72 QUALIFIED I/W DATA: 233N3204-301 PANEL ASSY IS I/W 233N3204-20 PANEL ASSY T/W S233T100-1070 LIGHTPLATE USED ON: 233N3204-301 PRE ALERT SB: 33A0044	504903	RF

MISSING ITEM NUMBERS NOT APPLICABLE

- ITEM NOT ILLUSTRATED

BOEING PROPRIETARY - Copyright © - Unpublished Work - See title page for details.

FIG ITEM	PART NUMBER	1 2 3 4 5 6 7 NOMENCLATURE	EFFECT FROM TO	UNITS PER ASSY
79				
- 775	233N3204-19	..PANEL ASSY- SUPPLIER CODE: V89954 COMPONENT MAINT MANUAL REF: 30-11-72 QUALIFIED I/W DATA: 233N3204-300 PANEL ASSY IS I/W 233N3204-19 PANEL ASSY T/W S233T100-1070 LIGHTPLATE USED ON: 233N3204-300 PRE ALERT SB: 33A0044	504903	RF
- 775	233N3204-1020	..PANEL ASSY- SUPPLIER CODE: V89954 COMPONENT MAINT MANUAL REF: 30-11-72 USED ON: 233N3204-1301 POST ALERT SB: 33A0044	504903	RF
- 775	233N3204-1019	..PANEL ASSY- SUPPLIER CODE: V89954 COMPONENT MAINT MANUAL REF: 30-11-72 USED ON: 233N3204-1300 POST ALERT SB: 33A0044	504903	RF
- 775	233N3204-36	..PANEL ASSY- SUPPLIER CODE: V89954 COMPONENT MAINT MANUAL REF: 30-11-72 USED ON: 233N3204-332	504903	RF
780	NAS514P632-5	...SCREW	504903	3
785	NAS1801-06-5	...SCREW- USED ON: 233N3204-19 233N3204-20 233N3204-1019 233N3204-1020	504903	3
785	BACS12HN06-5	...SCREW- USED ON: 233N3204-36	504903	3

MISSING ITEM NUMBERS NOT APPLICABLE

- ITEM NOT ILLUSTRATED

BOEING PROPRIETARY - Copyright © - Unpublished Work - See title page for details.

FIG ITEM	PART NUMBER	1 2 3 4 5 6 7 NOMENCLATURE	EFFECT FROM TO	UNITS PER ASSY
79				
790	MS35338-41	...WASHER- USED ON: 233N3204-19 233N3204-20 233N3204-1019 233N3204-1020	504903	3
790	BACW10EC06S	...WASHER- USED ON: 233N3204-36	504903	3
795	233N3250-56	...BRACKET	504903	1
800	69B46200-11	...STANDOFF	504903	3
805	233N3204-7	...BASEPLATE ASSY- SUPPLIER CODE: V89954	504903	1
810	PFSC35-38ASEMB	....STUD ASSY- SUPPLIER CODE: V72794 SPECIFICATION NUMBER: BACS21DX1B	504903	4
815	SF6G6CBB5D	....NUT SUPPLIER CODE: V12324 SPECIFICATION NUMBER: BACN10PA06-6	504903	2
820	233N3204-8	....BASEPLATE- SUPPLIER CODE: V89954	504903	1
825	233N3201-303	.PANEL ASSY-RAIN REPELLENT AND WIPER SUPPLIER CODE: V89954 ELECTRICAL EQUIP NUMBER: M10023 COMPONENT MAINT MANUAL REF: 30-42-01 FOR OTHER SYS DETAILS SEE: 30-42-51-03 33-13-01-02	504903	1
- 830	233N3201-16	..PANEL ASSY- SUPPLIER CODE: V89954 COMPONENT MAINT MANUAL REF: 30-42-01	504903	RF
835	NAS514P632-5	...SCREW	504903	3
840	BACS12CB06-5	...SCREW	504903	3
845	MS35338-41	...WASHER	504903	3
850	233N3250-6	...BRACKET	504903	1
855	69B46200-5	...STANDOFF	504903	3

MISSING ITEM NUMBERS NOT APPLICABLE

- ITEM NOT ILLUSTRATED

BOEING PROPRIETARY - Copyright © - Unpublished Work - See title page for details.

FIG ITEM	PART NUMBER	1 2 3 4 5 6 7 NOMENCLATURE	EFFECT FROM TO	UNITS PER ASSY
79				
860	233N3201-8	...BASEPLATE ASSY- SUPPLIER CODE: V89954	504903	1
865	BACS21DD1B	....STUD ASSY SUPPLIER CODE: V08524 SPECIFICATION NUMBER: BACS21DD1B	504903	4
870	SF6G6CBB5D	....NUT SUPPLIER CODE: V12324 SPECIFICATION NUMBER: BACN10PA06-6	504903	3
875	BACP10U0262N	....BASEPLATE	504903	1
880	233T3217-300	.PANEL ASSY-ANTI-COLLISION AND LDG SUPPLIER CODE: V89954 ELECTRICAL EQUIP NUMBER: M00056 COMPONENT MAINT MANUAL REF: 33-44-72 QUALIFIED I/W DATA: THE 233T3217-300 PANEL ASSY IS I/W THE 233T3217-41 PANEL ASSY T/W THE S233T100-6030 LIGHTPLATE. FOR OTHER SYS DETAILS SEE: 33-13-01-23 33-41-52-04 33-42-52-04 33-43-51-04 33-44-51-05	504903	1
- 885	233T3217-41	..PANEL ASSY- SUPPLIER CODE: V89954 COMPONENT MAINT MANUAL REF: 33-44-72 QUALIFIED I/W DATA: THE 233T3217-300 PANEL ASSY IS I/W THE 233T3217-41 PANEL ASSY T/W THE S233T100-6030 LIGHTPLATE.	504903	RF
890	NAS514P632-5	...SCREW	504903	4
895	NAS1801-06-6	...SCREW- OPTIONAL PART: BACS12HN06-6	504903	4

MISSING ITEM NUMBERS NOT APPLICABLE

- ITEM NOT ILLUSTRATED

BOEING PROPRIETARY - Copyright © - Unpublished Work - See title page for details.

FIG ITEM	PART NUMBER	1 2 3 4 5 6 7 NOMENCLATURE	EFFECT FROM TO	UNITS PER ASSY
79				
895	BACS12HN06-6	...SCREW-	504903	4
		OPTIONAL PART:		
		NAS1801-06-6		
900	BACW10EC06CD	...WASHER-	504903	4
		OPTIONAL PART:		
		BACW10EC06S		
900	BACW10EC06S	...WASHER-	504903	4
		OPTIONAL PART:		
		BACW10EC06CD		
905	NAS620-6	...WASHER	504903	8
910	233T6200-70	...BRACKET	504903	1
915	69B46200-5	...STANDOFF	504903	2
920	233T6200-66	...STANDOFF	504903	2
925	233N3210-7	...BASEPLATE ASSY-	504903	1
		SUPPLIER CODE:		
		V89954		
930	BACS21DD1B	....STUD ASSY	504903	4
		SUPPLIER CODE:		
		V08524		
		SPECIFICATION NUMBER:		
		BACS21DD1B		
935	SF6G6CBB5D	....NUT	504903	4
		SUPPLIER CODE:		
		V12324		
		SPECIFICATION NUMBER:		
		BACN10PA06-6		
940	233N3210-8	....BASEPLATE-	504903	1
		SUPPLIER CODE:		
		V89954		

MISSING ITEM NUMBERS NOT APPLICABLE

– ITEM NOT ILLUSTRATED

BOEING PROPRIETARY - Copyright © - Unpublished Work - See title page for details.

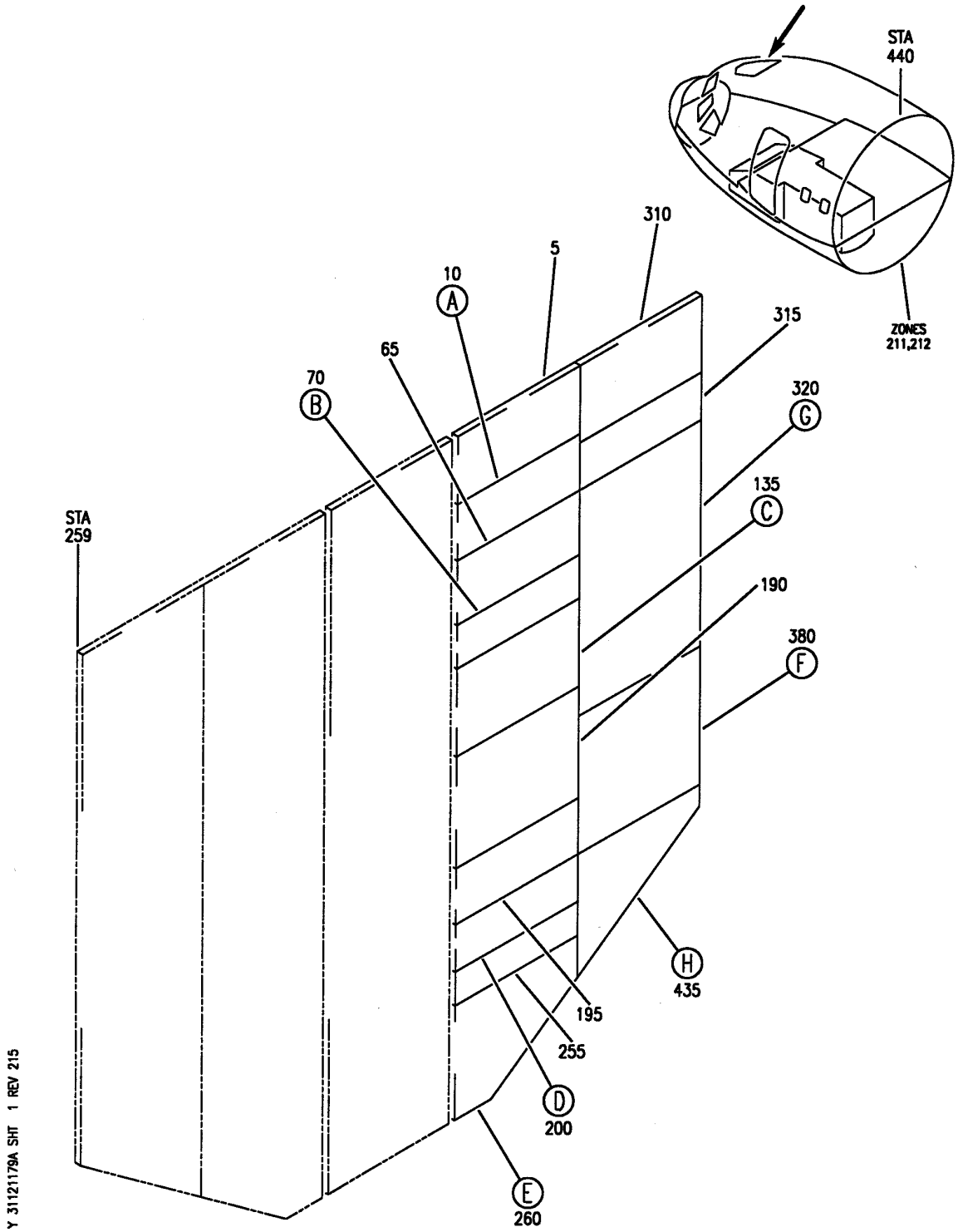

PANEL INSTL-P5 OVHD (INDICATING/RECORDING SYSTEMS ONLY)
FIGURE 79A (SHEET 1)

BOEING PROPRIETARY - Copyright © - Unpublished Work - See title page for details.

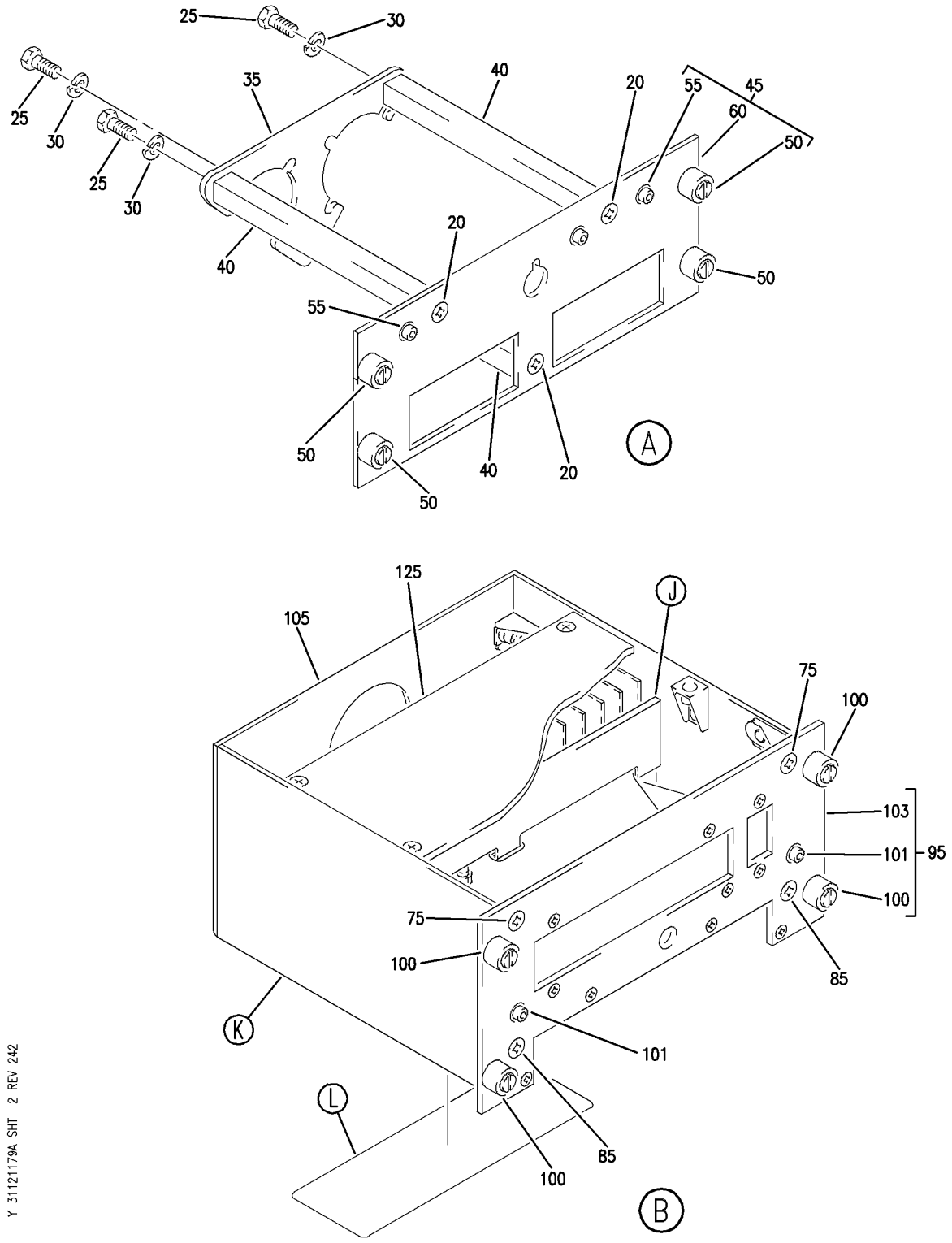

PANEL INSTL-P5 OVHD (INDICATING/RECORDING SYSTEMS ONLY)
FIGURE 79A (SHEET 2)

BOEING PROPRIETARY - Copyright © - Unpublished Work - See title page for details.

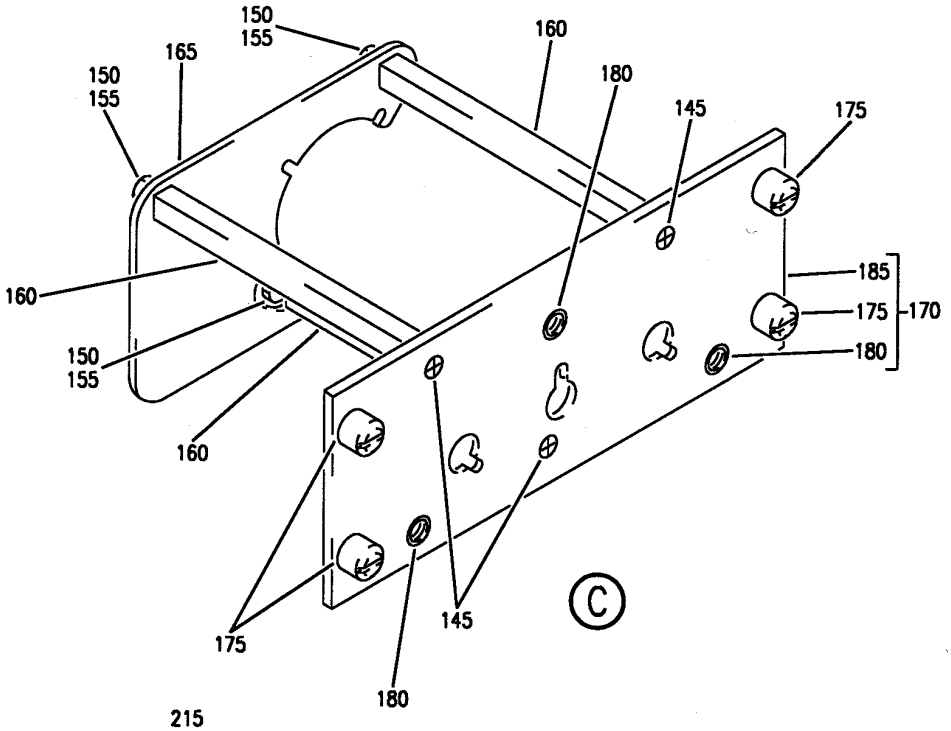

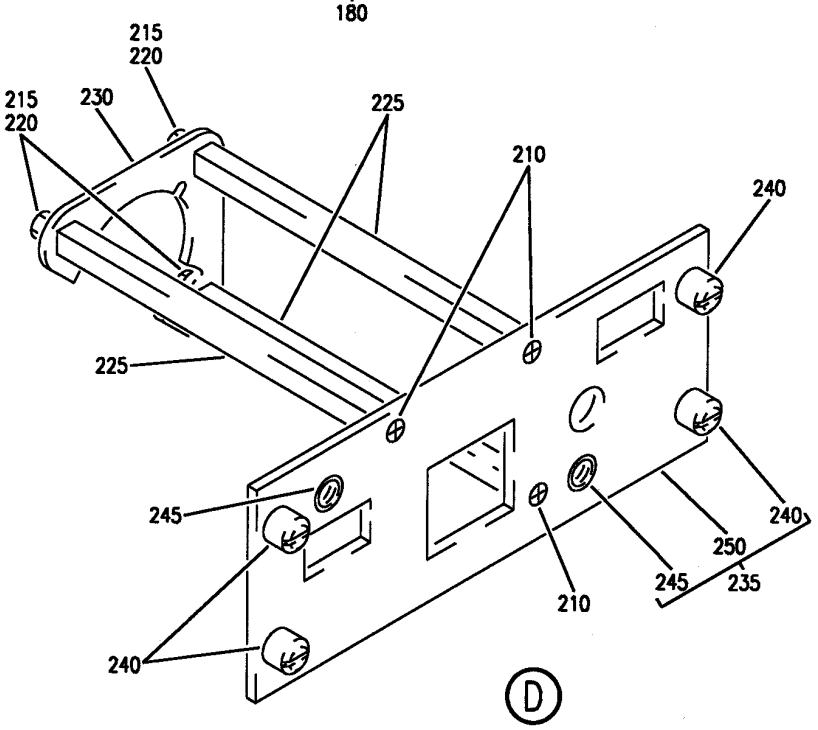

Y 31121179A SHT 3 REV 215

PANEL INSTL-P5 OVHD (INDICATING/RECORDING SYSTEMS ONLY)
FIGURE 79A (SHEET 3)

BOEING PROPRIETARY - Copyright © - Unpublished Work - See title page for details.

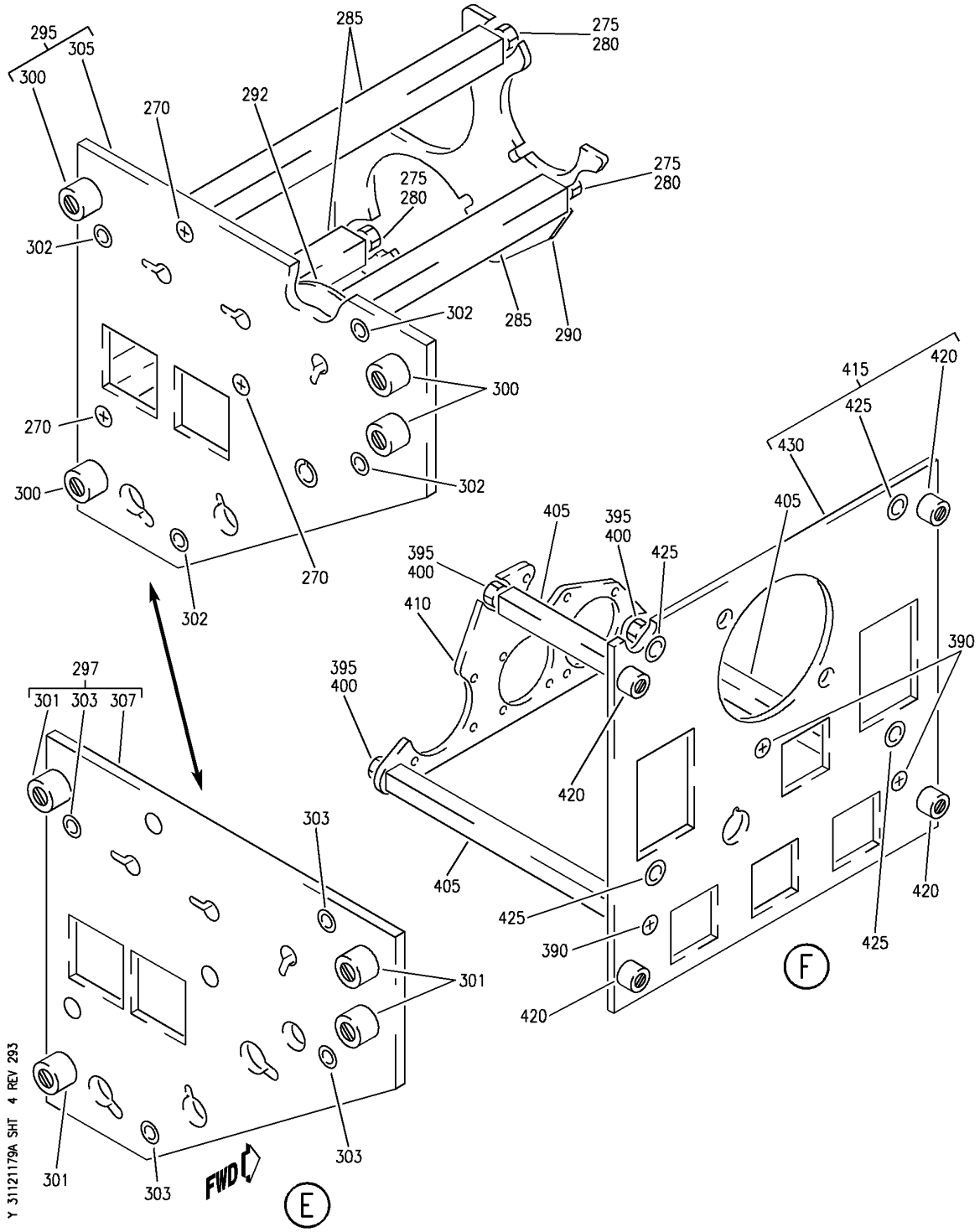

PANEL INSTL-P5 OVHD (INDICATING/RECORDING SYSTEMS ONLY)
FIGURE 79A (SHEET 4)

BOEING PROPRIETARY - Copyright © - Unpublished Work - See title page for details.

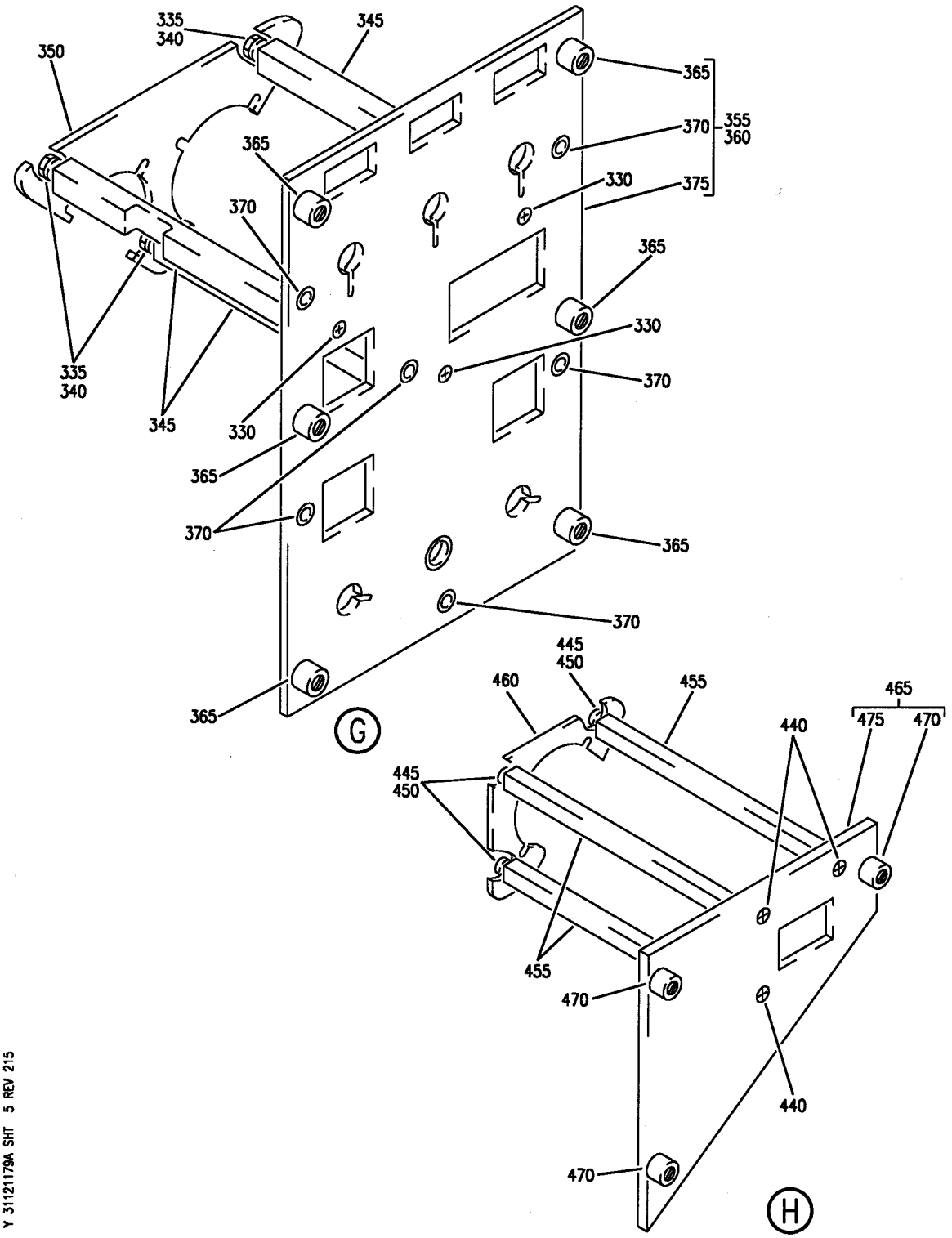

PANEL INSTL-P5 OVHD (INDICATING/RECORDING SYSTEMS ONLY)
FIGURE 79A (SHEET 5)

BOEING PROPRIETARY - Copyright © - Unpublished Work - See title page for details.

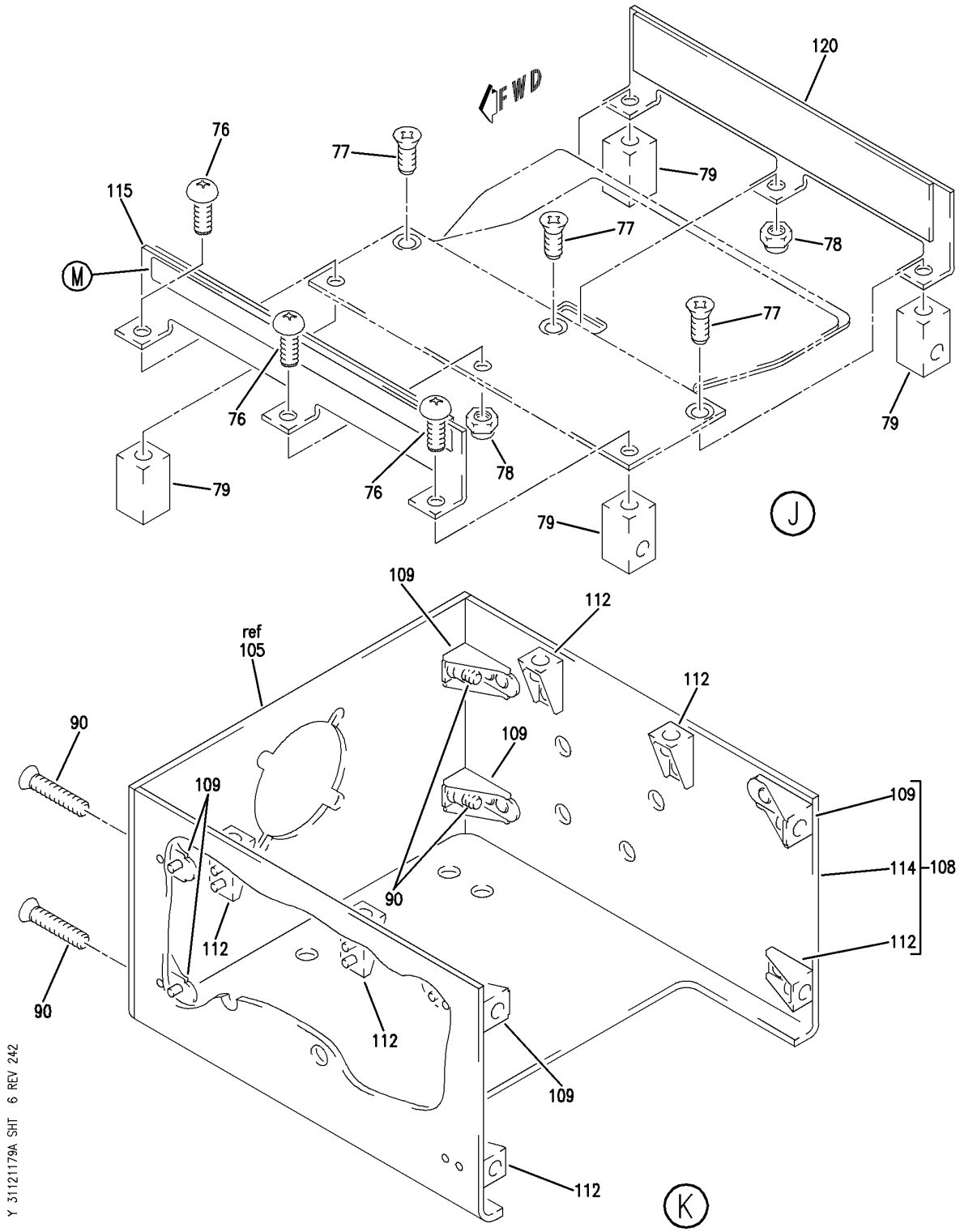

PANEL INSTL-P5 OVHD (INDICATING/RECORDING SYSTEMS ONLY)
FIGURE 79A (SHEET 6)

BOEING PROPRIETARY - Copyright © - Unpublished Work - See title page for details.

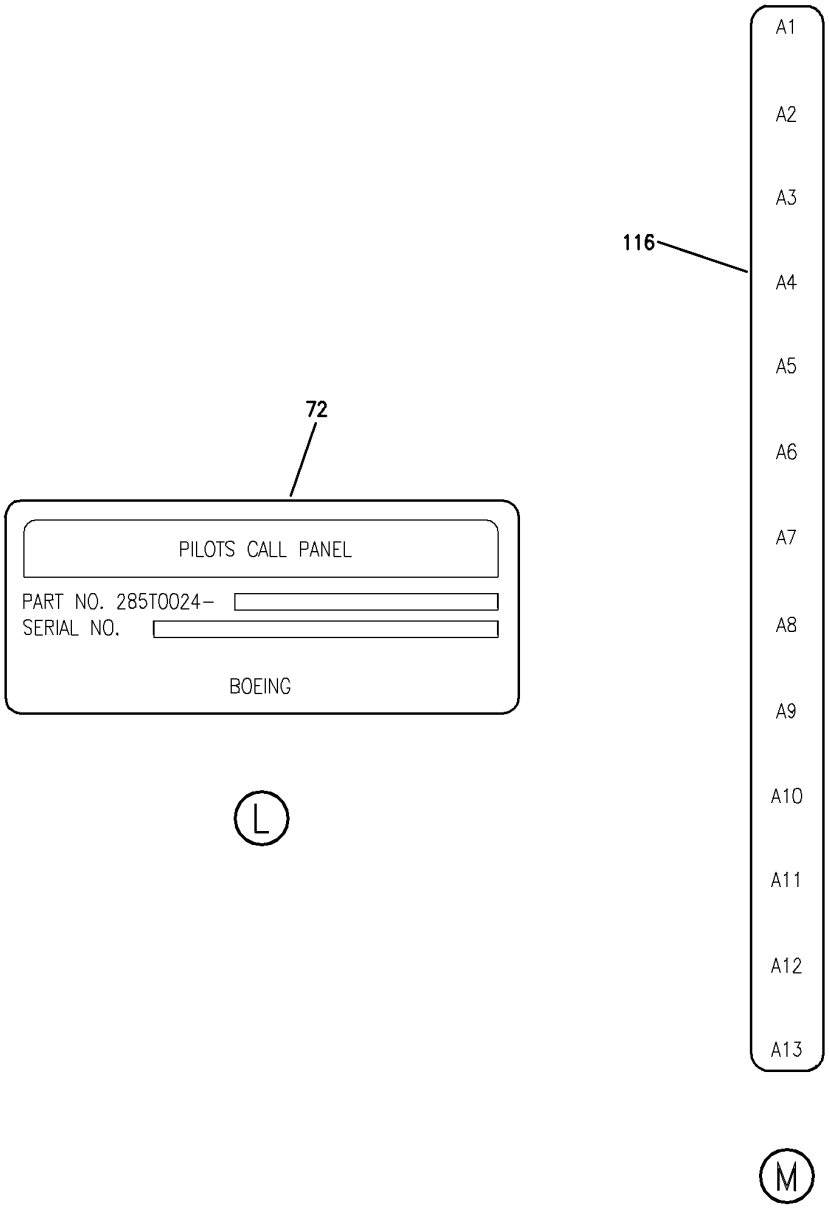

Y 31121179A SHT 7 REV 242

PANEL INSTL-P5 OVHD (INDICATING/RECORDING SYSTEMS ONLY)
FIGURE 79A (SHEET 7)

BOEING PROPRIETARY - Copyright © - Unpublished Work - See title page for details.

FIG ITEM	PART NUMBER	1 2 3 4 5 6 7 NOMENCLATURE	EFFECT FROM TO	UNITS PER ASSY
79A				
		PANEL INSTL-P5 OVHD (INDICATING/RECORDING SYSTEMS ONLY)	504903	
- 1	233N3103-136	PANEL INSTL-P5 OVHD (INDICATING/RECORDING SYSTEMS ONLY) FOR NHA/OTHER SYS DET SEE: 25-10-00-15E	504903	RF
5	BACP10U0262T	.PANEL	504903	1
10	233N3212-302	.PANEL ASSY-WINDOW HEAT SUPPLIER CODE: V89954 ELECTRICAL EQUIP NUMBER: M10395 COMPONENT MAINT MANUAL REF: 30-41-71 OPTIONAL PART: 233N3212-300 V89954 FOR OTHER SYS DETAILS SEE: 30-41-51-03 33-13-01-23	504903	1
10	233N3212-300	.PANEL ASSY-WINDOW HEAT SUPPLIER CODE: V89954 ELECTRICAL EQUIP NUMBER: M10395 COMPONENT MAINT MANUAL REF: 30-41-71 QUALIFIED I/W DATA: THE 233N3212-300 PANEL ASSY IS I/W THE 233N3212-11 PANEL ASSY T/W THE S233T100-1073 LIGHTPLATE OPTIONAL PART: 233N3212-302 V89954 FOR OTHER SYS DETAILS SEE: 30-41-51-03 33-13-01-23	504903	1
- 15	233N3212-14	..PANEL ASSY- SUPPLIER CODE: V89954 COMPONENT MAINT MANUAL REF: 30-41-71 USED ON: 233N3212-302	504903	RF

MISSING ITEM NUMBERS NOT APPLICABLE

- ITEM NOT ILLUSTRATED

BOEING PROPRIETARY - Copyright © - Unpublished Work - See title page for details.

FIG ITEM	PART NUMBER	1 2 3 4 5 6 7 NOMENCLATURE	EFFECT FROM TO	UNITS PER ASSY
79A				
- 15	233N3212-11	..PANEL ASSY-	504903	RF
		SUPPLIER CODE:		
		V89954		
		COMPONENT MAINT MANUAL REF:		
		30-41-71		
		QUALIFIED I/W DATA:		
		THE 233N3212-300 PANEL		
		ASSY IS I/W THE		
		233N3212-11 PANEL ASSY		
		T/W THE S233T100-1073		
		LIGHTPLATE		
		USED ON:		
		233N3212-300		
20	NAS514P632-5	...SCREW	504903	3
25	NAS1801-06-5	...SCREW-	504903	3
		USED ON:		
		233N3212-11		
25	BACS12HN06-5	...SCREW-	504903	3
		OPTIONAL PART:		
		NAS1801-06-5		
		USED ON:		
		233N3212-14		
25	NAS1801-06-5	...SCREW-	504903	3
		OPTIONAL PART:		
		BACS12HN06-5		
		USED ON:		
		233N3212-14		
30	MS35338-41	...WASHER-	504903	3
		USED ON:		
		233N3212-11		
30	BACW10EC06S	...WASHER-	504903	3
		USED ON:		
		233N3212-14		
35	69B46200-12	...STANDOFF	504903	3
40	233N3250-11	...BRACKET-SPRT	504903	1
45	233N3212-2	...BASEPLATE ASSY-	504903	1
		SUPPLIER CODE:		
		V89954		
50	PFSC35-38ASEMB	....STUD ASSY-	504903	4
		SUPPLIER CODE:		
		V72794		
		SPECIFICATION NUMBER:		
		BACS21DX1B		
55	SF6G6CBB5D	....NUT	504903	2
		SUPPLIER CODE:		
		V12324		
		SPECIFICATION NUMBER:		
		BACN10PA06-6		

MISSING ITEM NUMBERS NOT APPLICABLE

- ITEM NOT ILLUSTRATED

BOEING PROPRIETARY - Copyright © - Unpublished Work - See title page for details.

	FIG ITEM	PART NUMBER	1 2 3 4 5 6 7 NOMENCLATURE	EFFECT FROM TO	UNITS PER ASSY
	79A				
	60	233N3212-3	....BASEPLATE-	504903	1
			SUPPLIER CODE:		
			V89954		
R	65	622-6827-002	.PANEL ASSY-HF COMM CONT	504903	RF
R			SUPPLIER CODE:		
R			V4V792		
R			POSITION DATA:		
R			R		
R			ELECTRICAL EQUIP NUMBER:		
R			M00083		
R			COMPONENT MAINT MANUAL REF:		
R			23-10-73		
R			FOR BREAKDOWN SEE:		
R			23-11-02-01		
R	65	622-5432-002	.PANEL ASSY-HF CONT	504903	RF
R			SUPPLIER CODE:		
R			V4V792		
R			POSITION DATA:		
R			R		
R			ELECTRICAL EQUIP NUMBER:		
R			M00083		
R			COMPONENT MAINT MANUAL REF:		
R			23-10-71		
R			FOR BREAKDOWN SEE:		
R			23-11-02-01		
	70	285T0024-24	.MODULE ASSY-PILOTS	504903	1
			CALL PNL		
			SUPPLIER CODE:		
			V89954		
			ELECTRICAL EQUIP NUMBER:		
			M00051		
			COMPONENT MAINT MANUAL REF:		
			23-42-59		
			FOR OTHER SYS DETAILS SEE:		
			23-42-02-02		
			33-13-01-23		
	72	BAC27TEX0933	..MARKER-ALUMINUM FOIL	504903	1
			SUPPLIER CODE:		
			V89954		
	75	NAS514P632-5	..SCREW	504903	2
	76	MS35214-13	..SCREW	504903	3
	77	NAS514P440-5	..SCREW	504903	3

MISSING ITEM NUMBERS NOT APPLICABLE

– ITEM NOT ILLUSTRATED

BOEING PROPRIETARY - Copyright © - Unpublished Work - See title page for details.

FIG ITEM	PART NUMBER	1 2 3 4 5 6 7 NOMENCLATURE	EFFECT FROM TO	UNITS PER ASSY
79A				
78	92-1660-40	..NUT	504903	2
		SUPPLIER CODE:		
		V72962		
		SPECIFICATION NUMBER:		
		BACN10DN40		
		OPTIONAL PART:		
		92-1660-440		
		V15653		
79	285T0158-21	..BLOCK-MTG	504903	4
		SUPPLIER CODE:		
		V89954		
		ATTACHING PARTS		
- 81	NAS514P440-5	..SCREW	504903	4
		-------*-------		
85	NAS514P440-5	..SCREW	504903	2
90	NAS1801-06-5	..SCREW	504903	4
95	285T0157-6	..PANEL ASSY-	504903	1
		SUPPLIER CODE:		
		V89954		
100	PFSC35-38ASEMB	...STUD ASSY	504903	4
		SUPPLIER CODE:		
		V72794		
		SPECIFICATION NUMBER:		
		BACS21DX1B		
101	SF6G6CBB5D	...NUT	504903	2
		SUPPLIER CODE:		
		V12324		
		SPECIFICATION NUMBER:		
		BACN10PA06-6		
103	285T0157-13	...PANEL-	504903	1
		SUPPLIER CODE:		
		V89954		
105	285T0158-7	..PANEL-	504903	1
		SUPPLIER CODE:		
		V89954		
108	285T0158-23	..BRACKET ASSY-	504903	1
		SUPPLIER CODE:		
		V89954		
109	MF6000-06	...NUTPLATE	504903	6
		SUPPLIER CODE:		
		V15653		
		SPECIFICATION NUMBER:		
		BACN10KJ06		
		ATTACHING PARTS		
- 111	BACR15BA3AD	...RIVET-	504903	12
		SIZE DETERMINED ON INSTL.		
		-------*-------		

MISSING ITEM NUMBERS NOT APPLICABLE

- ITEM NOT ILLUSTRATED

BOEING PROPRIETARY - Copyright © - Unpublished Work - See title page for details.

FIG ITEM	PART NUMBER	1 2 3 4 5 6 7 NOMENCLATURE	EFFECT FROM TO	UNITS PER ASSY
79A				
112	F22A27M22-40	...NUT-	504903	6
		SUPPLIER CODE:		
		V0217B		
		ATTACHING PARTS		
- 113	BACR15BA2AD	...RIVET-	504903	12
		SIZE DETERMINED ON INSTL.		
		-------*-------		
114	285T0158-22	...BRACKET-	504903	1
		SUPPLIER CODE:		
		V89954		
115	285T0158-25	..BRACKET ASSY-	504903	1
		SUPPLIER CODE:		
		V89954		
116	BAC27TEX1986	...DECAL-	504903	1
		SUPPLIER CODE:		
		V89954		
120	285T0158-27	..BRACKET ASSY-	504903	1
		SUPPLIER CODE:		
		V89954		
125	285T0158-29	..COVER ASSY-	504903	1
		SUPPLIER CODE:		
		V89954		
		ATTACHING PARTS		
- 130	NAS514P440-5	..SCREW	504903	4
		-------*-------		
135	233T3216-300	.PANEL ASSY-PASS. SIGN CONT	504903	1
		SUPPLIER CODE:		
		V89954		
		ELECTRICAL EQUIP NUMBER:		
		M00052		
		COMPONENT MAINT MANUAL REF:		
		33-24-02		
		FOR OTHER SYS DETAILS SEE:		
		33-13-01-23		
		33-24-51-02		
- 140	233T3216-10	..PANEL ASSY-	504903	RF
		SUPPLIER CODE:		
		V89954		
145	NAS514P632-5	...SCREW	504903	3
150	NAS1801-06-05	...SCREW	504903	3
155	MS35338-41	...WASHER	504903	3
160	69B46200-9	...STANDOFF	504903	3
165	233T6200-85	...BRACKET-SPRT	504903	1
170	233T3216-2	...BASEPLATE ASSY-	504903	1
		SUPPLIER CODE:		
		V89954		

MISSING ITEM NUMBERS NOT APPLICABLE

- ITEM NOT ILLUSTRATED

BOEING PROPRIETARY - Copyright © - Unpublished Work - See title page for details.

FIG ITEM	PART NUMBER	1 2 3 4 5 6 7 NOMENCLATURE	EFFECT FROM TO	UNITS PER ASSY
79A				
175	BACS21DD1B	....STUD ASSY SUPPLIER CODE: V08524 SPECIFICATION NUMBER: BACS21DD1B	504903	4
180	SF6G6CBB5D	....NUT SUPPLIER CODE: V12324 SPECIFICATION NUMBER: BACN10PA06-6	504903	3
185	233T3216-3	....BASEPLATE- SUPPLIER CODE: V89954	504903	1
190	130502-7	.PANEL ASSY-CABIN ALTITUDE CONT SUPPLIER CODE: V64547 FUNCTIONAL DESCRIPTION: SELECTOR CONTAINS CONTROLS AND CIRCUITRY NECESSARY FOR AUTOMATIC OR MANUAL PRESSURE SELECTION SPECIFICATION NUMBER: S210T160-72 ELECTRICAL EQUIP NUMBER: M00013 COMPONENT MAINT MANUAL REF: 21-31-50 FOR BREAKDOWN SEE: 21-31-01-02	504903	RF
190	130502-6	.PANEL ASSY-CAB. ALTITUDE SUPPLIER CODE: V64547 SPECIFICATION NUMBER: S210T160-62 ELECTRICAL EQUIP NUMBER: M00013 COMPONENT MAINT MANUAL REF: 21-31-50 FOR BREAKDOWN SEE: 21-31-01-02	504903	RF

MISSING ITEM NUMBERS NOT APPLICABLE

– ITEM NOT ILLUSTRATED

BOEING PROPRIETARY - Copyright © - Unpublished Work - See title page for details.

FIG ITEM	PART NUMBER	1 2 3 4 5 6 7 NOMENCLATURE	EFFECT FROM TO	UNITS PER ASSY
79A				
190	130502-5	.PANEL ASSY-CAB. ALTITUDE SUPPLIER CODE: V64547 SPECIFICATION NUMBER: S210T160-52 ELECTRICAL EQUIP NUMBER: M00013 COMPONENT MAINT MANUAL REF: 21-31-50 FOR BREAKDOWN SEE: 21-31-01-02	504903	RF
190	130502-4	.PANEL ASSY-CAB. ALTITUDE SUPPLIER CODE: V64547 SPECIFICATION NUMBER: S210T160-42 ELECTRICAL EQUIP NUMBER: M00013 COMPONENT MAINT MANUAL REF: 21-31-50 FOR BREAKDOWN SEE: 21-31-01-02	504903	RF
195	SETL0C420L	.PANEL ASSY-CAB. PRESSURE GAUGES SUPPLIER CODE: V61349 SPECIFICATION NUMBER: S231N210-15 ELECTRICAL EQUIP NUMBER: M00019 COMPONENT MAINT MANUAL REF: 21-33-07 FOR BREAKDOWN SEE: 21-33-51-03	504903	RF

MISSING ITEM NUMBERS NOT APPLICABLE

— ITEM NOT ILLUSTRATED

BOEING PROPRIETARY - Copyright © - Unpublished Work - See title page for details.

FIG ITEM	PART NUMBER	1 2 3 4 5 6 7 NOMENCLATURE	EFFECT FROM TO	UNITS PER ASSY
79A				
200	233N3203-300	.PANEL ASSY-EQPT COOLING SUPPLIER CODE: V89954 ELECTRICAL EQUIP NUMBER: M10067 COMPONENT MAINT MANUAL REF: 21-58-71 QUALIFIED I/W DATA: 233N3203-300 PANEL ASSY IS I/W THE 233N3203-32 PANEL ASSY T/W S233T100-6045 LIGHTPLATE PRE ALERT SB: 33A0044 FOR OTHER SYS DETAILS SEE: 11-31-10-12 21-33-51-03 21-58-19-10 21-58-51-03 33-13-01-23	504903	1
200	233N3203-1300	.PANEL ASSY-EQPT COOLING SUPPLIER CODE: V89954 ELECTRICAL EQUIP NUMBER: M10067 COMPONENT MAINT MANUAL REF: 21-58-71 POST ALERT SB: 33A0044 FOR OTHER SYS DETAILS SEE: 11-31-10-12 21-33-51-03 21-58-19-10 21-58-51-03 33-13-01-23	504903	1
200	233N3203-337	.PANEL ASSY-EQPT COOLING SUPPLIER CODE: V89954 ELECTRICAL EQUIP NUMBER: M10067 COMPONENT MAINT MANUAL REF: 21-58-71 FOR OTHER SYS DETAILS SEE: 11-31-10-12 21-33-51-03 21-58-19-10 21-58-51-03 33-13-01-23	504903	1

MISSING ITEM NUMBERS NOT APPLICABLE

– ITEM NOT ILLUSTRATED

BOEING PROPRIETARY - Copyright © - Unpublished Work - See title page for details.

FIG ITEM	PART NUMBER	1 2 3 4 5 6 7 NOMENCLATURE	EFFECT FROM TO	UNITS PER ASSY
79A				
- 205	233N3203-32	..PANEL ASSY- SUPPLIER CODE: V89954 COMPONENT MAINT MANUAL REF: 21-58-71 QUALIFIED I/W DATA: 233N3203-300 PANEL ASSY IS I/W THE 233N3203-32 PANEL ASSY T/W S233T100-6045 LIGHTPLATE USED ON: 233N3203-300 PRE ALERT SB: 33A0044	504903	RF
- 205	233N3203-1032	..PANEL ASSY- SUPPLIER CODE: V89954 COMPONENT MAINT MANUAL REF: 21-58-71 POST ALERT SB: 33A0044	504903	RF
- 205	233N3203-37	..PANEL ASSY- SUPPLIER CODE: V89954 COMPONENT MAINT MANUAL REF: 21-58-71 USED ON: 233N3203-337	504903	RF
210	NAS514P632-6	...SCREW	504903	3
215	NAS1801-06-5	...SCREW- OPTIONAL PART: BACS12HN06-5 USED ON: 233N3203-32 233N3203-1032	504903	3
215	BACS12HN06-5	...SCREW- OPTIONAL PART: NAS1801-06-5 USED ON: 233N3203-32 233N3203-1032	504903	3
215	BACS12HN06-5	...SCREW- USED ON: 233N3203-37	504903	3
220	BACW10EC06S	...WASHER-	504903	3
225	69B46200-11	...STANDOFF	504903	3
230	233N3250-10	...BRACKET	504903	1

MISSING ITEM NUMBERS NOT APPLICABLE

- ITEM NOT ILLUSTRATED

BOEING PROPRIETARY - Copyright © - Unpublished Work - See title page for details.

FIG ITEM	PART NUMBER	1 2 3 4 5 6 7 NOMENCLATURE	EFFECT FROM TO	UNITS PER ASSY
79A				
235	233N3203-19	...BASEPLATE ASSY- SUPPLIER CODE: V89954	504903	1
240	PFSC35-38ASEMB	....STUD ASSY- SUPPLIER CODE: V72794 SPECIFICATION NUMBER: BACS21DX1B	504903	4
245	SF6G6CBB5D	....NUT SUPPLIER CODE: V12324 SPECIFICATION NUMBER: BACN10PA06-6	504903	2
250	233N3203-21	....BASEPLATE- SUPPLIER CODE: V89954	504903	1
255	BACP10U0112T	.PANEL ASSY	504903	1
260	233N3221-302	.PANEL ASSY-LIGHTING CONT R SUPPLIER CODE: V89954 ELECTRICAL EQUIP NUMBER: M10057 COMPONENT MAINT MANUAL REF: 33-11-72 QUALIFIED I/W DATA: 233N3221-302 PANEL ASSY IS I/W 233N3221-61 PANEL ASSY T/W S233T100-6039 LIGHTPLATE AND (3) RD241-119 KNOBS AND (1) BP248-127 KNOB FOR OTHER SYS DETAILS SEE: 33-11-51-17 33-13-01-23 33-13-02-03 33-16-51-03 33-45-53-03 52-51-51-03	504903	1

MISSING ITEM NUMBERS NOT APPLICABLE

– ITEM NOT ILLUSTRATED

BOEING PROPRIETARY - Copyright © - Unpublished Work - See title page for details.

FIG ITEM	PART NUMBER	1 2 3 4 5 6 7 NOMENCLATURE	EFFECT FROM TO	UNITS PER ASSY
79A				
260	233N3221-326	.PANEL ASSY-LIGHTING CONT R SUPPLIER CODE: V89954 ELECTRICAL EQUIP NUMBER: M10057 COMPONENT MAINT MANUAL REF: 33-11-72 FOR OTHER SYS DETAILS SEE: 33-11-51-17 33-13-01-23 33-13-02-03 33-16-51-03 33-45-53-03 52-51-51-03	504903	1
- 265	233N3221-61	..PANEL ASSY- SUPPLIER CODE: V89954 COMPONENT MAINT MANUAL REF: 33-11-72 QUALIFIED I/W DATA: 233N3221-302 PANEL ASSY IS I/W 233N3221-61 PANEL ASSY T/W S233T100-6039 LIGHTPLATE AND (3) RD241-119 KNOBS AND (1) BP248-127 KNOB USED ON: 233N3221-302	504903	RF
- 265	233N3221-110	..PANEL ASSY- SUPPLIER CODE: V89954 COMPONENT MAINT MANUAL REF: 33-11-72 USED ON: 233N3221-326	504903	RF
270	NAS514P632-5	...SCREW- USED ON: 233N3221-61	504903	3
270	FH6C5CPL12BN	...SCREW- SUPPLIER CODE: V12324 OPTIONAL PART: NAS514P632-6 USED ON: 233N3221-110	504903	3

MISSING ITEM NUMBERS NOT APPLICABLE

- ITEM NOT ILLUSTRATED

BOEING PROPRIETARY - Copyright © - Unpublished Work - See title page for details.

FIG ITEM	PART NUMBER	1 2 3 4 5 6 7 NOMENCLATURE	EFFECT FROM TO	UNITS PER ASSY
79A				
270	NAS514P632-6	...SCREW-	504903	3
		OPTIONAL PART:		
		FH6C5CPL12BN		
		V12324		
		USED ON:		
		233N3221-110		
275	BACS12HN06-5	...SCREW-	504903	3
280	BACW10EC06S	...WASHER-	504903	3
		USED ON:		
		233N3221-61		
280	BACW10EC06CD	...WASHER-	504903	3
		USED ON:		
		233N3221-110		
285	69B46200-10	...STANDOFF	504903	3
290	233N3250-48	...BRACKET	504903	1
292	233N3221-42	...SPACER-	504903	1
		SUPPLIER CODE:		
		V89954		
		OPTIONAL PART:		
		65B40112-12		
292	65B40112-12	...SPACER-	504903	1
		OPTIONAL PART:		
		233N3221-42		
		V89954		
295	233N3221-33	...BASEPLATE ASSY-	504903	1
		SUPPLIER CODE:		
		V89954		
		USED ON:		
		233N3221-61		
297	233N3221-104	...BASEPLATE ASSY-	504903	1
		SUPPLIER CODE:		
		V89954		
		USED ON:		
		233N3221-110		
300	BACS21DD1B	....STUD ASSY-	504903	4
		SUPPLIER CODE:		
		V08524		
		SPECIFICATION NUMBER:		
		BACS21DD1B		
		OPTIONAL PART:		
		BACS21DX1B		
		USED ON:		
		233N3221-33		

MISSING ITEM NUMBERS NOT APPLICABLE

— ITEM NOT ILLUSTRATED

BOEING PROPRIETARY - Copyright © - Unpublished Work - See title page for details.

FIG ITEM	PART NUMBER	1 2 3 4 5 6 7 NOMENCLATURE	EFFECT FROM TO	UNITS PER ASSY
79A				
300	PFSC35-38ASEMB	....STUD ASSY- SUPPLIER CODE: V72794 SPECIFICATION NUMBER: BACS21DX1B OPTIONAL PART: BACS21DD1B USED ON: 233N3221-33	504903	4
301	PFSC35-38ASEMB	....STUD ASSY- SUPPLIER CODE: V72794 SPECIFICATION NUMBER: BACS21DX1B USED ON: 233N3221-104	504903	4
302	SF6G6CBB5D	....NUT- SUPPLIER CODE: V12324 SPECIFICATION NUMBER: BACN10PA06-6 USED ON: 233N3221-33	504903	4
303	SF6G6CBB5D	....NUT- SUPPLIER CODE: V12324 USED ON: 233N3221-104	504903	4
305	233N3221-37	....BASEPLATE- SUPPLIER CODE: V89954 USED ON: 233N3221-33	504903	1
307	233N3221-105	....BASEPLATE- SUPPLIER CODE: V89954 USED ON: 233N3221-104	504903	1
310	BACP10U030OT	.PANEL ASSY	504903	1

MISSING ITEM NUMBERS NOT APPLICABLE

– ITEM NOT ILLUSTRATED

BOEING PROPRIETARY - Copyright © - Unpublished Work - See title page for details.

FIG ITEM	PART NUMBER	1 2 3 4 5 6 7 NOMENCLATURE	EFFECT FROM TO	UNITS PER ASSY
79A				
315	2263-01-1	.INDICATOR ASSY-COMPT TEMP SUPPLIER CODE: V52013 FUNCTIONAL DESCRIPTION: INDICATOR SHOWS COMPARTMENT TEMPERATURE FOR EACH OF THE THREE CABIN ZONES SPECIFICATION NUMBER: S231N211-3 ELECTRICAL EQUIP NUMBER: M10078 COMPONENT MAINT MANUAL REF: 21-61-02 FOR BREAKDOWN SEE: 21-65-51-01	504903	RF
315	20-210-01	.INDICATOR ASSY-COMPT TEMP SUPPLIER CODE: V35012 SPECIFICATION NUMBER: S231N211-2 ELECTRICAL EQUIP NUMBER: M10078 COMPONENT MAINT MANUAL REF: 21-65-01 FOR BREAKDOWN SEE: 21-65-51-01	504903	RF
320	233N3217-300	.PANEL ASSY-AIR SUPPLIER CODE: V89954 ELECTRICAL EQUIP NUMBER: M10193 COMPONENT MAINT MANUAL REF: 21-51-71 QUALIFIED I/W DATA: THE 233N3217-300 PANEL ASSY IS I/W THE 233N3217-15 PANEL ASSY T/W THE S233T100-6014 LIGHTPLATE AND (2) BP248-127 KNOBS AND (3) BP260-113 KNOBS FOR OTHER SYS DETAILS SEE: 21-25-55-03 21-51-54-03 21-61-04-03 33-13-01-23	504903	1

MISSING ITEM NUMBERS NOT APPLICABLE

– ITEM NOT ILLUSTRATED

BOEING PROPRIETARY - Copyright © - Unpublished Work - See title page for details.

FIG ITEM	PART NUMBER	1 2 3 4 5 6 7 NOMENCLATURE	EFFECT FROM TO	UNITS PER ASSY
79A				
- 325	233N3217-15	..PANEL ASSY-	504903	RF
		SUPPLIER CODE:		
		V89954		
		COMPONENT MAINT MANUAL REF:		
		21-51-71		
		QUALIFIED I/W DATA:		
		THE 233N3217-300 PANEL		
		ASSY IS I/W THE		
		233N3217-15 PANEL ASSY		
		T/W THE S233T100-6014		
		LIGHTPLATE AND (2)		
		BP248-127 KNOBS AND (3)		
		BP260-113 KNOBS		
330	NAS514P632-5	...SCREW	504903	3
335	NAS1801-06-5	...SCREW-	504903	3
		OPTIONAL PART:		
		BACS12HN06-5		
335	BACS12HN06-5	...SCREW-	504903	3
		OPTIONAL PART:		
		NAS1801-06-5		
340	BACW10EC06S	...WASHER-	504903	3
345	69B46200-14	...STANDOFF	504903	3
350	233N3250-13	...BRACKET-CONNECTOR	504903	1
355	233N3217-9	...BASEPLATE ASSY-	504903	1
		SUPPLIER CODE:		
		V89954		
		OPTIONAL PART:		
		233N3217-2		
		V89954		
360	233N3217-2	...BASEPLATE ASSY-	504903	1
		SUPPLIER CODE:		
		V89954		
		OPTIONAL PART:		
		233N3217-9		
		V89954		
365	PFSC35-38ASEMB	....STUD ASSY-	504903	6
		SUPPLIER CODE:		
		V72794		
		SPECIFICATION NUMBER:		
		BACS21DX1B		
370	SF6G6CBB5D	....NUT	504903	5
		SUPPLIER CODE:		
		V12324		
		SPECIFICATION NUMBER:		
		BACN10PA06-6		

MISSING ITEM NUMBERS NOT APPLICABLE

- ITEM NOT ILLUSTRATED

BOEING PROPRIETARY - Copyright © - Unpublished Work - See title page for details.

FIG ITEM	PART NUMBER	1 2 3 4 5 6 7 NOMENCLATURE	EFFECT FROM TO	UNITS PER ASSY
79A				
375	233N3217-10	....BASEPLATE- SUPPLIER CODE: V89954 USED ON: 233N3217-9	504903	1
375	233N3217-3	....BASEPLATE- SUPPLIER CODE: V89954 USED ON: 233N3217-2	504903	1
380	233N3215-300	.PANEL ASSY-BLEED AIR SUPPLIER CODE: V89954 ELECTRICAL EQUIP NUMBER: M10259 COMPONENT MAINT MANUAL REF: 36-11-71 QUALIFIED I/W DATA: THE 233N3215-300 PANEL ASSY IS I/W THE 233N3215-16 PANEL ASSY T/W THE S233T100-6009 LIGHTPLATE PRE ALERT SB: 33A0044 FOR OTHER SYS DETAILS SEE: 26-18-51-04 33-13-01-23 36-11-04-01 36-21-00-01 36-21-02-05 36-22-51-03 49-52-00-01 75-32-00-01	504903	1

MISSING ITEM NUMBERS NOT APPLICABLE

– ITEM NOT ILLUSTRATED

BOEING PROPRIETARY - Copyright © - Unpublished Work - See title page for details.

FIG ITEM	PART NUMBER	1 2 3 4 5 6 7 NOMENCLATURE	EFFECT FROM TO	UNITS PER ASSY
79A				
380	233N3215-1300	.PANEL ASSY-BLEED AIR SUPPLIER CODE: V89954 ELECTRICAL EQUIP NUMBER: M10259 COMPONENT MAINT MANUAL REF: 36-11-71 POST ALERT SB: 33A0044 FOR OTHER SYS DETAILS SEE: 26-18-51-04 33-13-01-23 36-11-04-01 36-21-00-01 36-21-02-05 36-22-51-03 49-52-00-01 75-32-00-01	504903	1
380	233N3215-303	.PANEL ASSY-BLEED AIR SUPPLIER CODE: V89954 ELECTRICAL EQUIP NUMBER: M10259 COMPONENT MAINT MANUAL REF: 36-11-71 FOR OTHER SYS DETAILS SEE: 26-18-51-04 33-13-01-23 36-11-04-01 36-21-00-01 36-21-02-05 36-22-51-03 49-52-00-01 75-32-00-01	504903	1

MISSING ITEM NUMBERS NOT APPLICABLE

– ITEM NOT ILLUSTRATED

BOEING PROPRIETARY - Copyright © - Unpublished Work - See title page for details.

FIG ITEM	PART NUMBER	1 2 3 4 5 6 7 NOMENCLATURE	EFFECT FROM TO	UNITS PER ASSY
79A				
- 385	233N3215-16	..PANEL ASSY- SUPPLIER CODE: V89954 MISCELLANEOUS DATA: FOR SPARES PROCURE NEXT HIGHER ASSY COMPONENT MAINT MANUAL REF: 36-11-71 QUALIFIED I/W DATA: THE 233N3215-300 PANEL ASSY IS I/W THE 233N3215-16 PANEL ASSY T/W THE S233T100-6009 LIGHTPLATE USED ON: 233N3215-300 PRE ALERT SB: 33A0044	504903	RF
- 385	233N3215-1016	..PANEL ASSY- SUPPLIER CODE: V89954 COMPONENT MAINT MANUAL REF: 36-11-71 POST ALERT SB: 33A0044	504903	RF
- 385	233N3215-22	..PANEL ASSY- SUPPLIER CODE: V89954 MISCELLANEOUS DATA: FOR SPARES PROCURE NEXT HIGHER ASSY ELECTRICAL EQUIP NUMBER: M10259 COMPONENT MAINT MANUAL REF: 36-11-71 USED ON: 233N3215-303	504903	RF
390	NAS514P632-5	...SCREW- USED ON: 233N3215-16 233N3215-1016	504903	3
390	FH6C5TPKL12BN	...SCREW- SUPPLIER CODE: V12324 USED ON: 233N3215-22	504903	3

MISSING ITEM NUMBERS NOT APPLICABLE

- ITEM NOT ILLUSTRATED

BOEING PROPRIETARY - Copyright © - Unpublished Work - See title page for details.

FIG ITEM	PART NUMBER	1 2 3 4 5 6 7 NOMENCLATURE	EFFECT FROM TO	UNITS PER ASSY
79A				
395	NAS1801-06-5	...SCREW-	504903	3
		USED ON:		
		233N3215-16		
		233N3215-1016		
395	NAS1801-06-5	...SCREW-	504903	3
		OPTIONAL PART:		
		BACS12HN06-5		
		USED ON:		
		233N3215-22		
395	BACS12HN06-5	...SCREW-	504903	3
		OPTIONAL PART:		
		NAS1801-06-5		
		USED ON:		
		233N3215-22		
400	MS35338-41	...WASHER-	504903	3
		USED ON:		
		233N3215-16		
		233N3215-1016		
400	BACW10EC06S	...WASHER-	504903	3
		USED ON:		
		233N3215-22		
405	69B46200-11	...STANDOFF	504903	3
410	233N3250-39	...BRACKET	504903	1
415	233N3215-10	...BASEPLATE ASSY-	504903	1
		SUPPLIER CODE:		
		V89954		
420	PFSC35-38ASEMB	....STUD ASSY-	504903	4
		SUPPLIER CODE:		
		V72794		
		SPECIFICATION NUMBER:		
		BACS21DX1B		
425	SF6G6CBB5D	....NUT	504903	4
		SUPPLIER CODE:		
		V12324		
		SPECIFICATION NUMBER:		
		BACN10PA06-6		
430	233N3215-11	....BASEPLATE-	504903	1
		SUPPLIER CODE:		
		V89954		
435	233T3230-22	.PANEL ASSY-ENTERTAINMENT	504903	1
		ELECTRICAL EQUIP NUMBER:		
		M01111		
		COMPONENT MAINT MANUAL REF:		
		23-32-52		
		FOR OTHER SYS DETAILS SEE:		
		23-32-00-11		
440	NAS514P632-5	..SCREW	504903	3
445	BACS12CB06-5	..SCREW	504903	3
450	MS35338-41	..WASHER	504903	3

MISSING ITEM NUMBERS NOT APPLICABLE

— ITEM NOT ILLUSTRATED

BOEING PROPRIETARY - Copyright © - Unpublished Work - See title page for details.

FIG ITEM	PART NUMBER	1 2 3 4 5 6 7 NOMENCLATURE	EFFECT FROM TO	UNITS PER ASSY
79A				
455	69B46200-10	..STANDOFF	504903	3
460	233T6200-27	..BRACKET-SPRT	504903	1
465	233T3230-2	..BASEPLATE ASSY	504903	1
470	BACS21DD1B	...STUD ASSY	504903	3
		SUPPLIER CODE:		
		V08524		
		SPECIFICATION NUMBER:		
		BACS21DD1B		
475	233T3200-3	...BASEPLATE	504903	1

MISSING ITEM NUMBERS NOT APPLICABLE

– ITEM NOT ILLUSTRATED

BOEING PROPRIETARY - Copyright © - Unpublished Work - See title page for details.

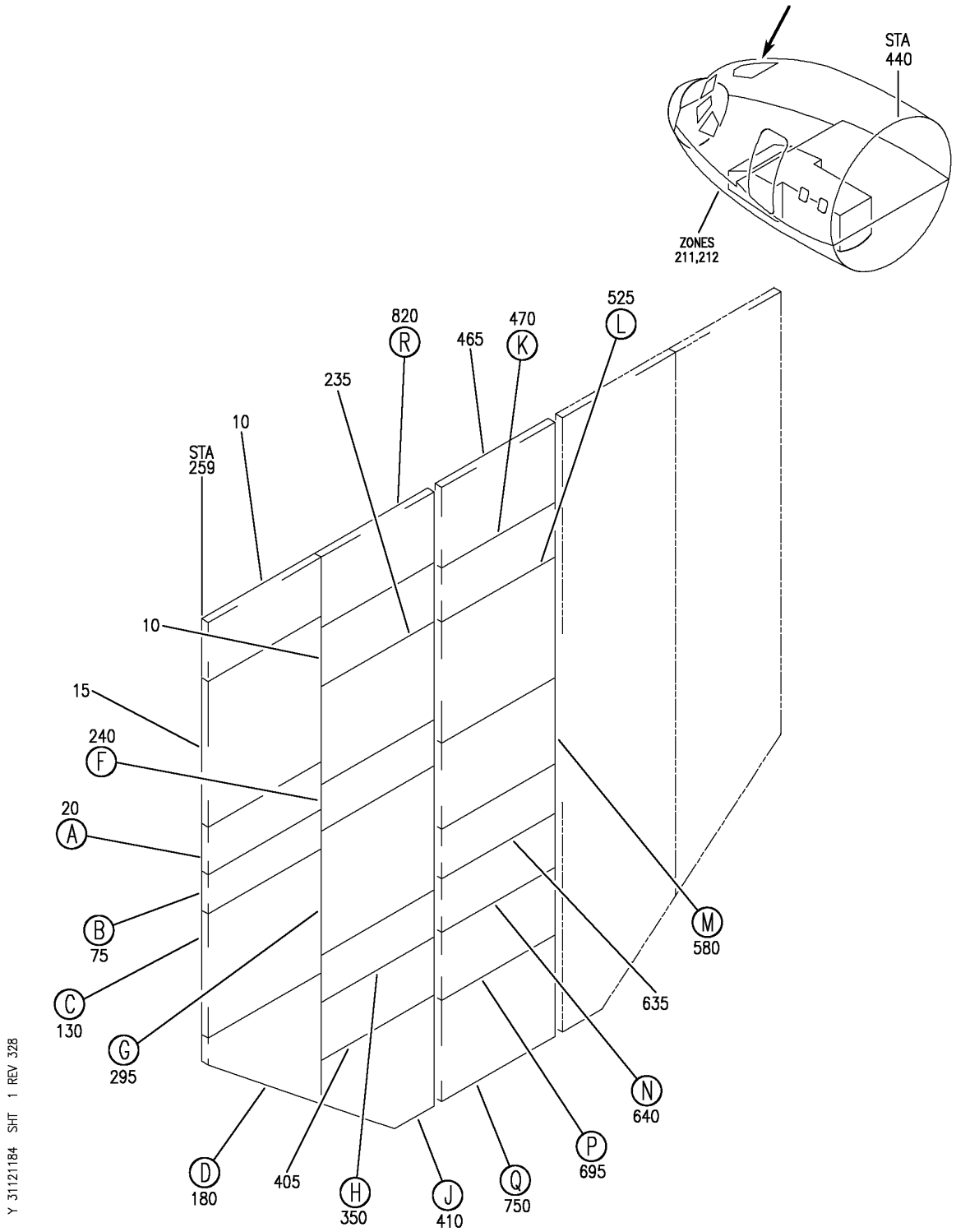

PANEL INSTL-P5 OVHD (INDICATING/RECORDING SYSTEMS ONLY)
FIGURE 84 (SHEET 1)

BOEING PROPRIETARY - Copyright © - Unpublished Work - See title page for details.

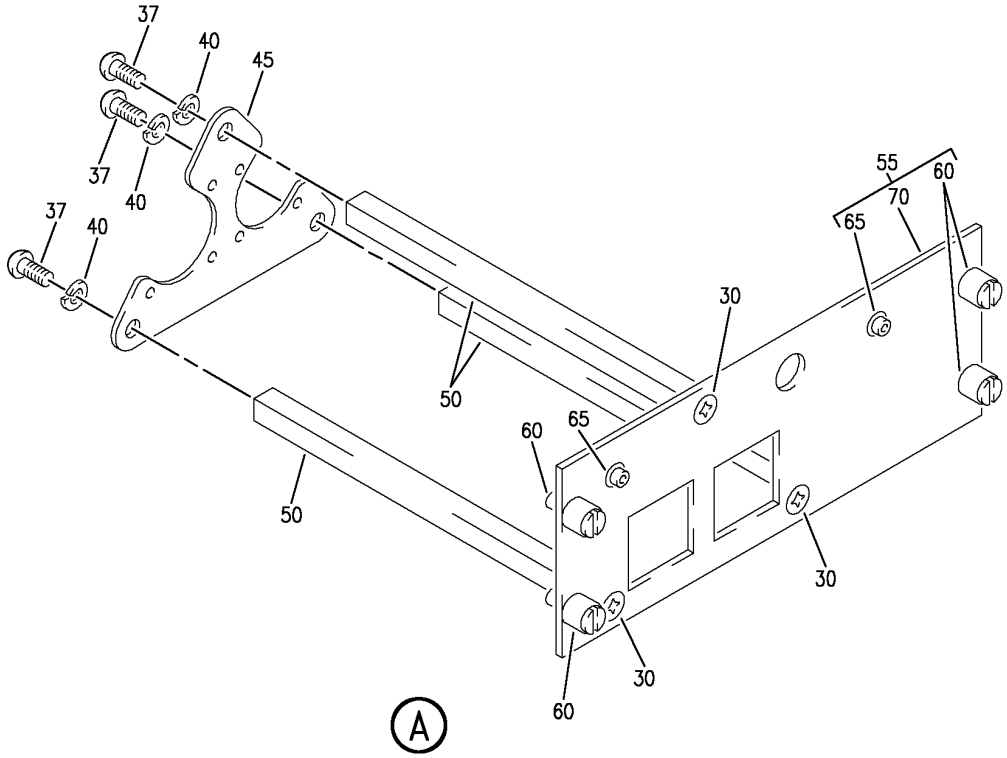

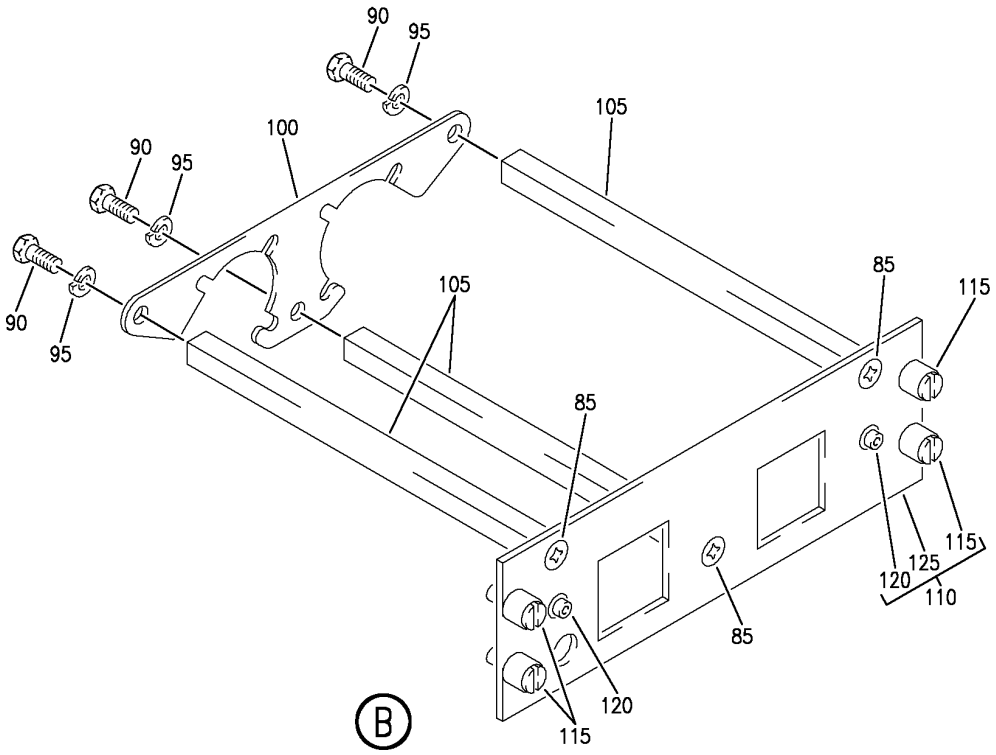

Y 31121184 SHT 2 REV 247

PANEL INSTL-P5 OVHD (INDICATING/RECORDING SYSTEMS ONLY)
FIGURE 84 (SHEET 2)

BOEING PROPRIETARY - Copyright © - Unpublished Work - See title page for details.

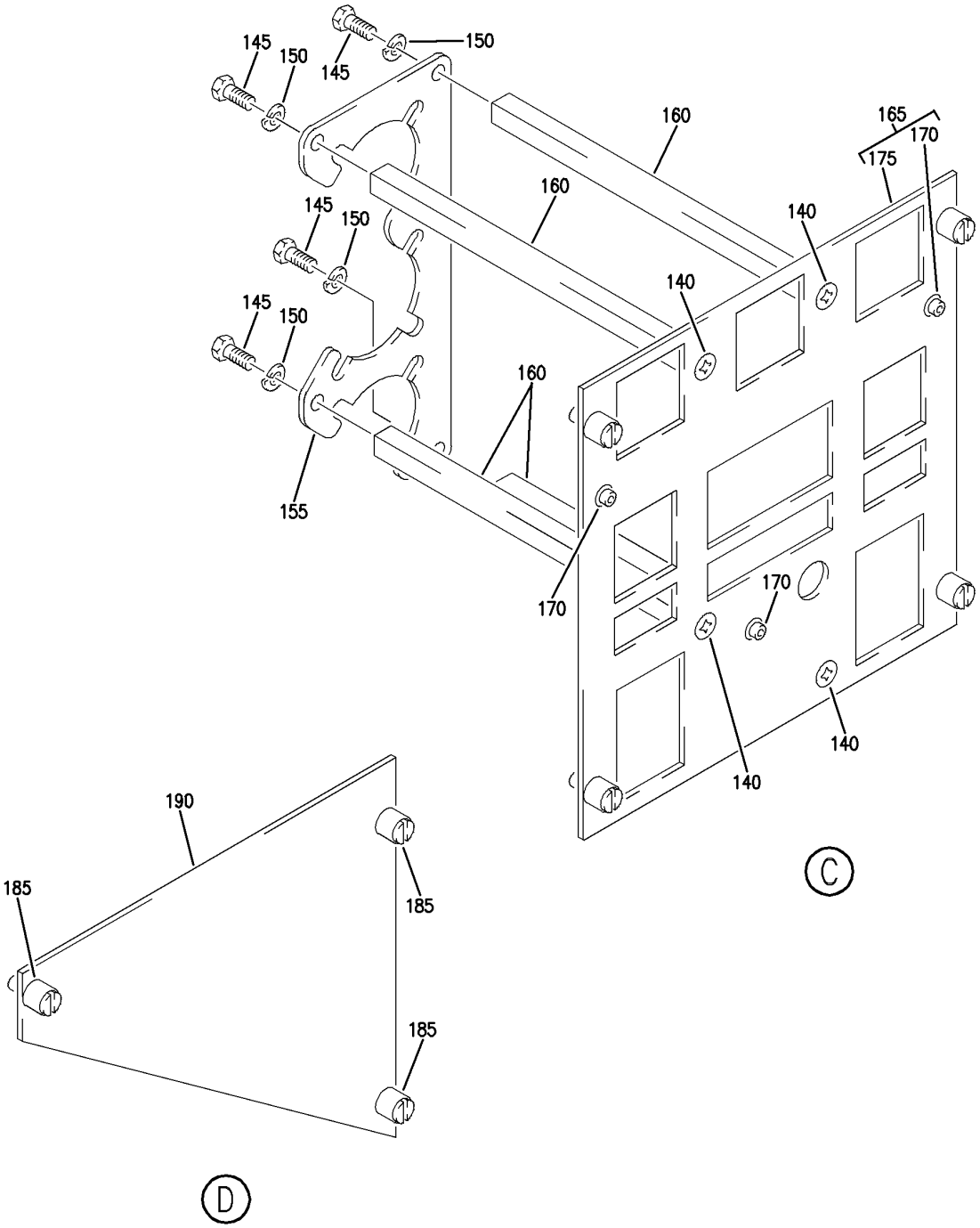

PANEL INSTL-P5 OVHD (INDICATING/RECORDING SYSTEMS ONLY)
FIGURE 84 (SHEET 3)

BOEING PROPRIETARY - Copyright © - Unpublished Work - See title page for details.

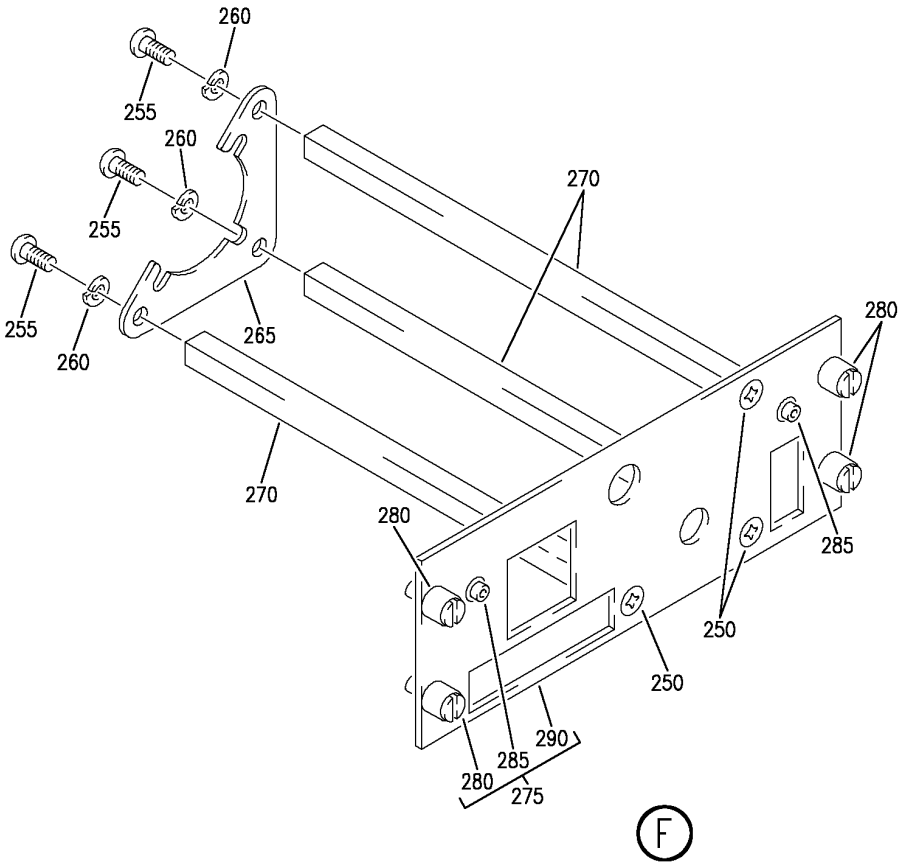

Y 31121184 SHT 4 REV 328

PANEL INSTL-P5 OVHD (INDICATING/RECORDING SYSTEMS ONLY)
FIGURE 84 (SHEET 4)

BOEING PROPRIETARY - Copyright © - Unpublished Work - See title page for details.

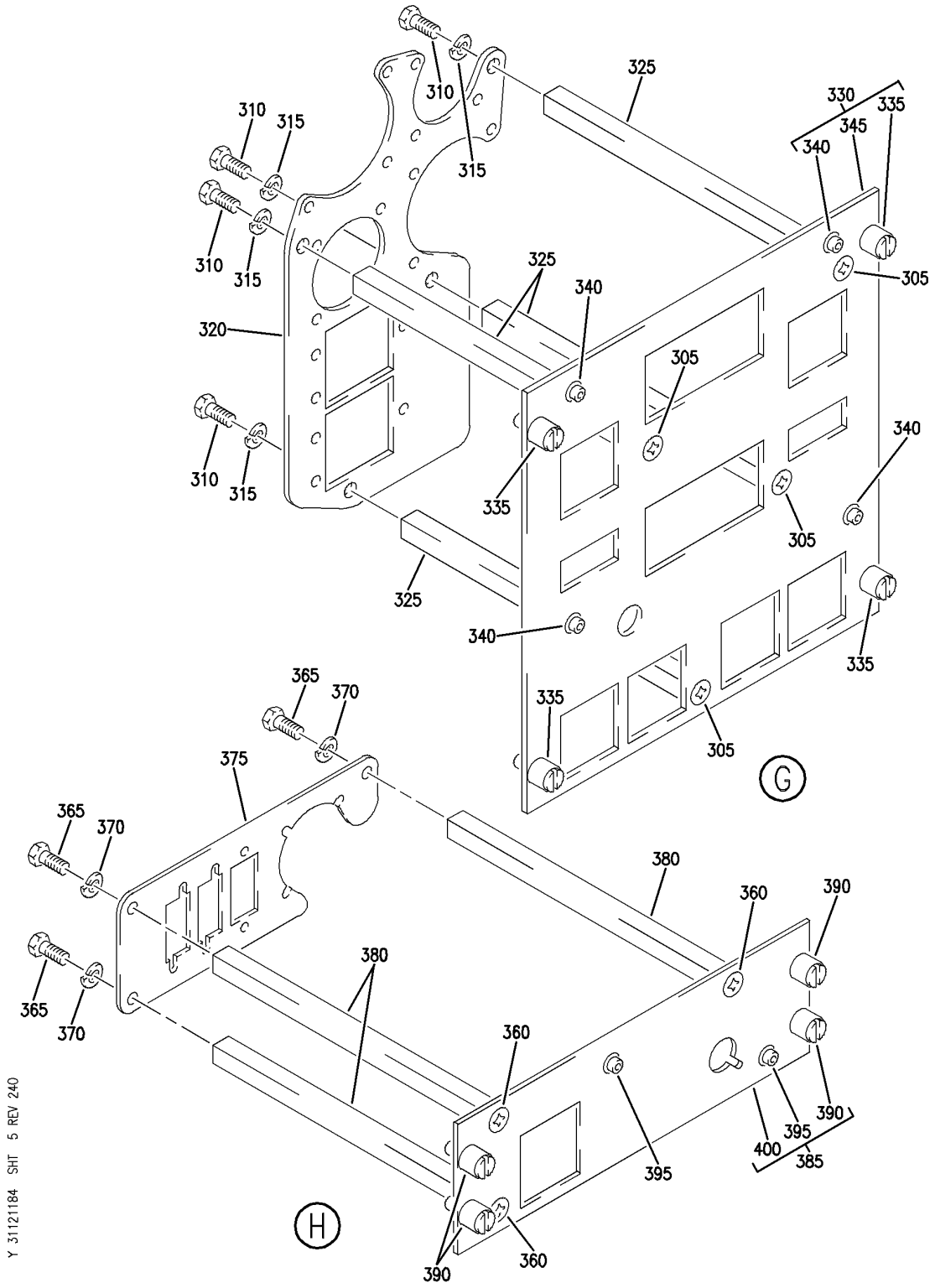

PANEL INSTL-P5 OVHD (INDICATING/RECORDING SYSTEMS ONLY)
FIGURE 84 (SHEET 5)

BOEING PROPRIETARY - Copyright © - Unpublished Work - See title page for details.

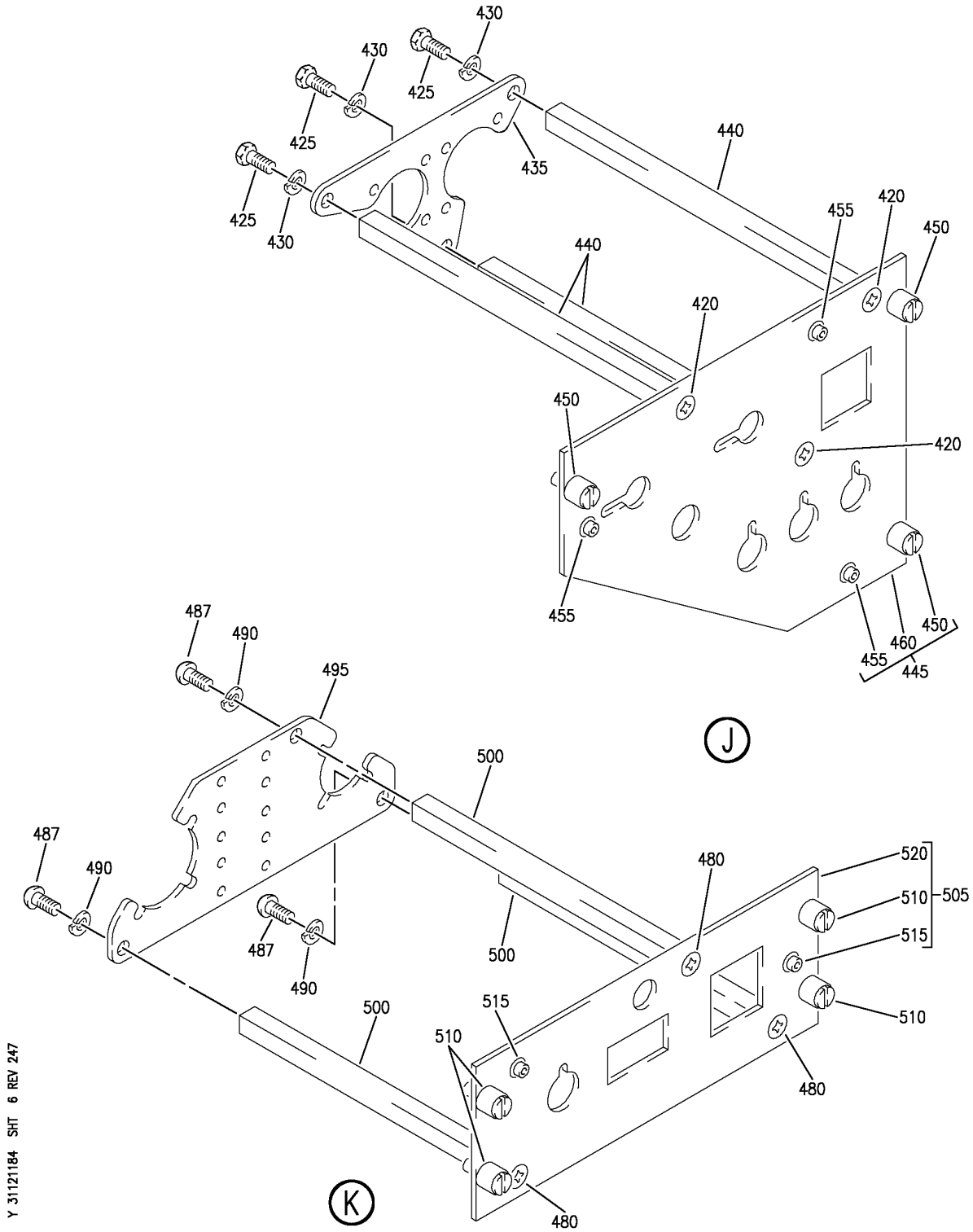

PANEL INSTL-P5 OVHD (INDICATING/RECORDING SYSTEMS ONLY)
FIGURE 84 (SHEET 6)

BOEING PROPRIETARY - Copyright © - Unpublished Work - See title page for details.

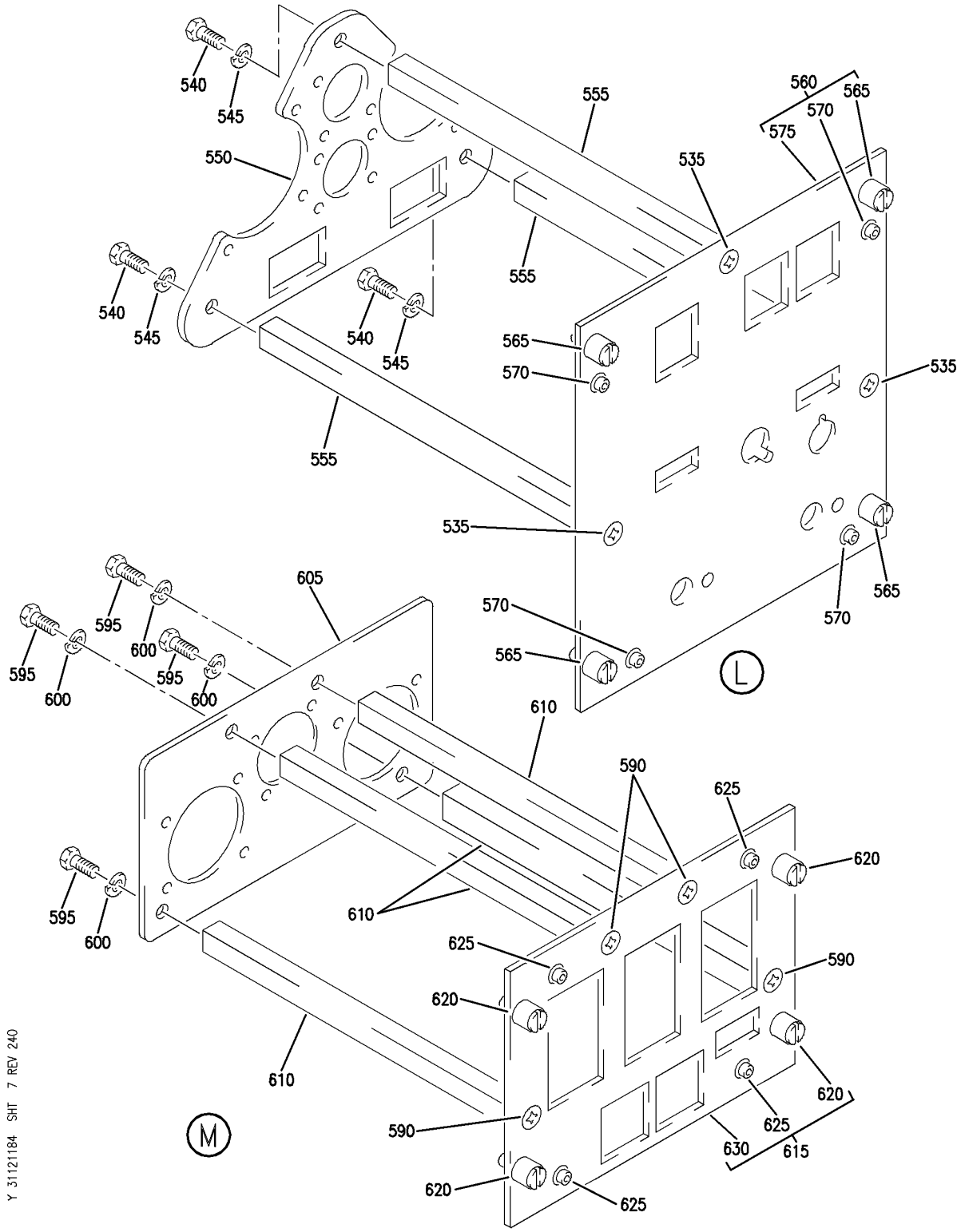

PANEL INSTL-P5 OVHD (INDICATING/RECORDING SYSTEMS ONLY)
FIGURE 84 (SHEET 7)

BOEING PROPRIETARY - Copyright © - Unpublished Work - See title page for details.

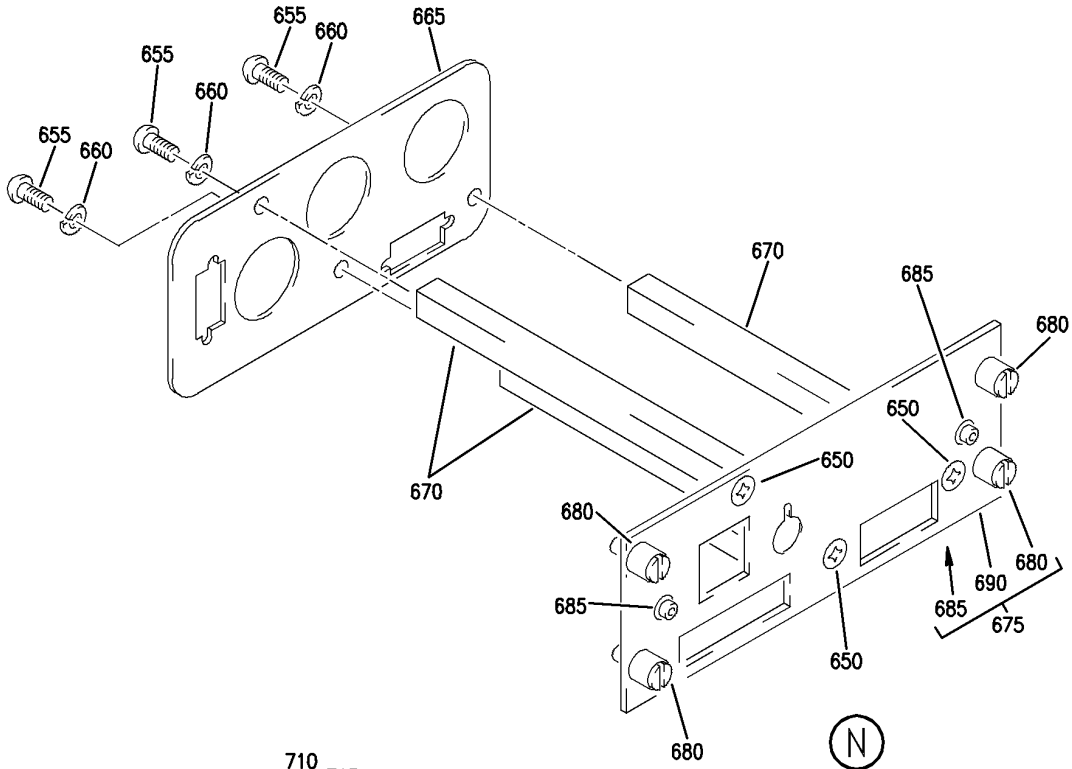

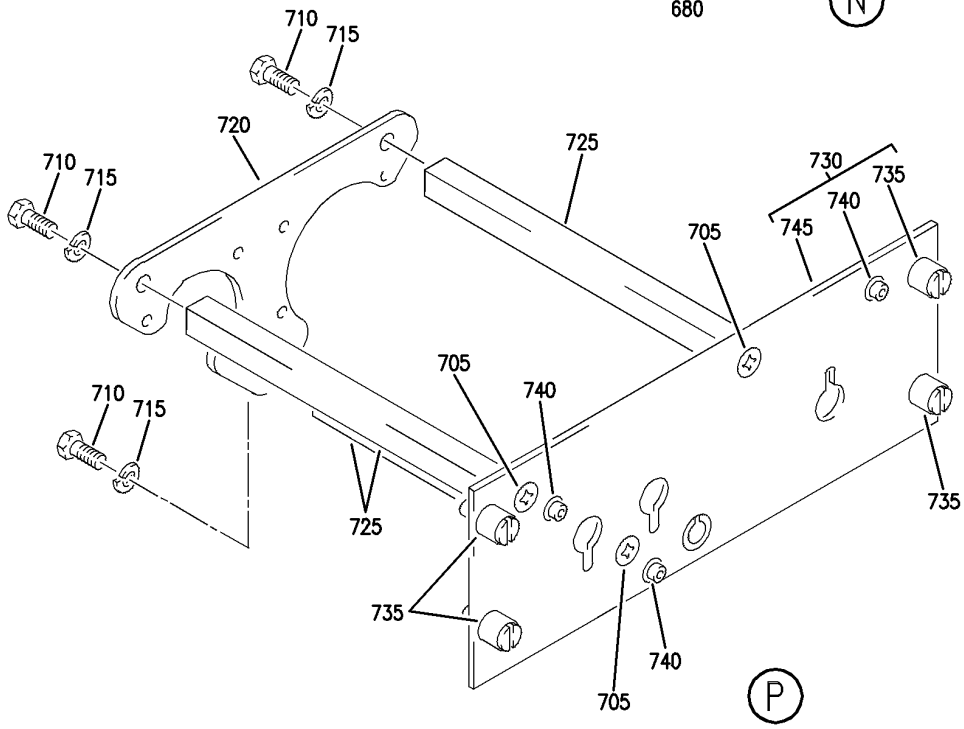

Y 31121184 SHT 8 REV 240

PANEL INSTL-P5 OVHD (INDICATING/RECORDING SYSTEMS ONLY)
FIGURE 84 (SHEET 8)

BOEING PROPRIETARY - Copyright © - Unpublished Work - See title page for details.

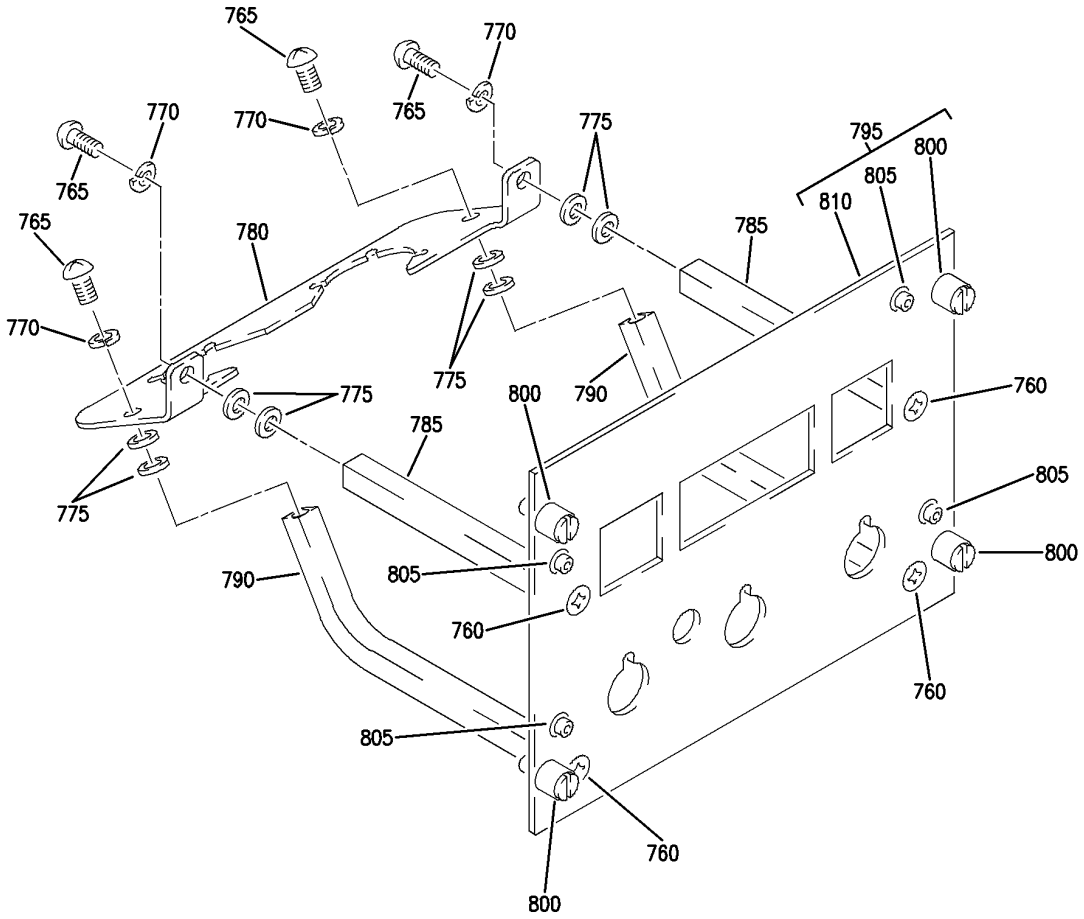

Q

Y 31121184 SHT 9 REV 240

PANEL INSTL-P5 OVHD (INDICATING/RECORDING SYSTEMS ONLY)
FIGURE 84 (SHEET 9)

BOEING PROPRIETARY - Copyright © - Unpublished Work - See title page for details.

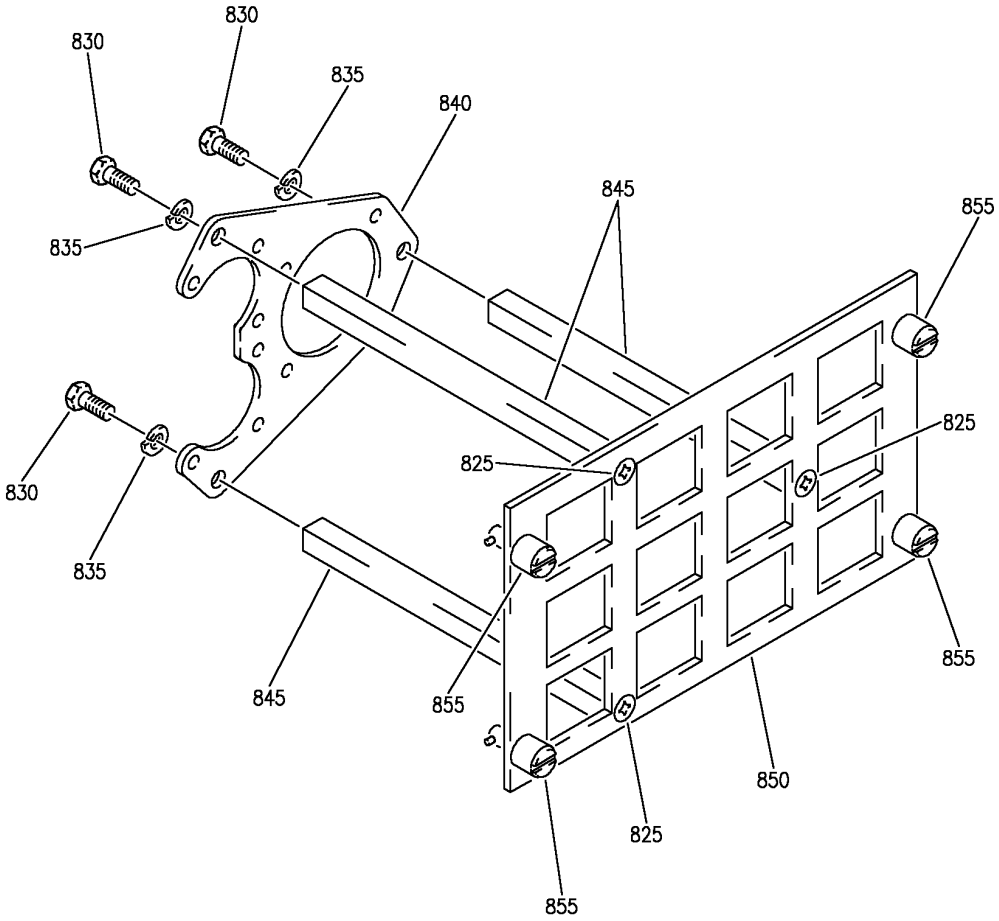

®

Y 31121184 SHT 10 REV 266

PANEL INSTL-P5 OVHD (INDICATING/RECORDING SYSTEMS ONLY)
FIGURE 84 (SHEET 10)

BOEING PROPRIETARY - Copyright © - Unpublished Work - See title page for details.

FIG ITEM	PART NUMBER	1 2 3 4 5 6 7 NOMENCLATURE	EFFECT FROM TO	UNITS PER ASSY
84				
		PANEL INSTL-P5 OVHD (INDICATING/RECORDING SYSTEMS ONLY)	106106	
- 1	MODREF170180	PANEL INSTL-P5 OVHD (INDICATING/RECORDING SYSTEMS ONLY)	106106	1
		MODULE NUMBER:		
		233N3103-353 REV B		
		FOR OTHER SYS DETAILS SEE:		
		11-31-10-12		
		21-25-55-03		
		21-31-01-02		
		21-33-51-03		
		21-51-54-03		
		21-58-19-10		
		21-58-51-03		
		21-61-04-03		
		21-65-51-01		
		22-21-01-04		
		22-24-51-02		
		23-24-01-01		
		23-32-00-11		
		23-42-02-02		
		23-71-05-02		
		24-11-52-05		
		24-22-01-03		
		24-31-01-10		
		24-31-03-09		
		24-33-04-01		
		24-41-51-04		
		24-51-62-01		
		26-18-51-04		
		27-21-53-02		
		27-41-55-01		
		27-61-51-03		
		27-62-52-02		
		28-22-51-02		
		28-41-04-01		
		28-41-51-03		
		29-11-02-03		
		29-11-05-04		
		29-11-52-07		
		29-21-54-03		
		29-31-00-01		
		29-32-51-03		
		29-33-52-03		
		30-11-51-03		
		30-21-51-03		
		30-31-51-02		

MISSING ITEM NUMBERS NOT APPLICABLE

- ITEM NOT ILLUSTRATED

BOEING PROPRIETARY - Copyright © - Unpublished Work - See title page for details.

FIG ITEM	PART NUMBER	1 2 3 4 5 6 7 NOMENCLATURE	EFFECT FROM TO	UNITS PER ASSY
84				
		30-32-51-01		
		30-33-51-02		
		30-41-51-03		
		30-42-51-03		
		32-42-52-03		
		33-11-03-03		
		33-11-51-17		
		33-13-01-65		
		33-13-02-03		
		33-16-51-03		
		33-24-51-02		
		33-41-52-04		
		33-42-01-04		
		33-42-02-04		
		33-42-52-04		
		33-43-51-04		
		33-44-51-05		
		33-45-53-03		
		33-51-08-05		
		34-21-02-01		
		35-21-51-04		
		36-11-04-01		
		36-21-00-01		
		36-21-02-05		
		36-22-51-03		
		49-41-00-02		
		49-52-00-01		
		49-70-00-01		
		52-51-51-03		
		52-71-51-02		
		73-21-52-02		
		74-31-51-05		
		75-32-00-01		
		80-11-09-02		
		FOR ADDITIONAL DETAILS SEE:		
		31-12-11-84A		
10	BACP10U0262T	.PANEL	106106	2

MISSING ITEM NUMBERS NOT APPLICABLE

– ITEM NOT ILLUSTRATED

BOEING PROPRIETARY - Copyright © - Unpublished Work - See title page for details.

FIG ITEM	PART NUMBER	1 2 3 4 5 6 7 NOMENCLATURE	EFFECT FROM TO	UNITS PER ASSY
84				
15	CG1093AD03	.PANEL ASSY-IRS MODE SELECT SUPPLIER CODE: V65507 FUNCTIONAL DESCRIPTION: PROVIDES MODE CONTROL, SYSTEM STATUS, INITIALIZATION CAPABILITIES AND DATA DISPLAY FOR THREE INERTIAL REFERENCE UNITS SPECIFICATION NUMBER: S242T101-206 ELECTRICAL EQUIP NUMBER: M00059 COMPONENT MAINT MANUAL REF: 34-21-21 QUALIFIED I/W DATA: S242T101-206/CG1093AD03 CAN REPLACE AND BE REPLACED BY S242T101-203/CG1093AD01 EXCEPT FOR NL001-NL999, NU701-NU999 FOR 757, AND VQ001-VQ999 FOR 767, WHERE S242T101-206/CG1093AD03 MUST BE USED. FOR BREAKDOWN SEE: 34-21-02-01	106106	RF
20	233N3216-309	.PANEL ASSY-YAW DAMPER SUPPLIER CODE: V89954 ELECTRICAL EQUIP NUMBER: M10250 COMPONENT MAINT MANUAL REF: 22-21-71 FOR OTHER SYS DETAILS SEE: 22-21-01-04 33-13-01-65	106106	1
- 25	233N3216-35	..PANEL ASSY- SUPPLIER CODE: V89954 MISCELLANEOUS DATA: FOR SPARES PROCURE NEXT HIGHER ASSY COMPONENT MAINT MANUAL REF: 22-21-71	106106	RF

MISSING ITEM NUMBERS NOT APPLICABLE

– ITEM NOT ILLUSTRATED

BOEING PROPRIETARY - Copyright © - Unpublished Work - See title page for details.

FIG ITEM	PART NUMBER	1 2 3 4 5 6 7 NOMENCLATURE	EFFECT FROM TO	UNITS PER ASSY
84				
30	FH6C5CPL12BN	...SCREW-	106106	3
		SUPPLIER CODE:		
		V12324		
37	BACS12CK06U5	...SCREW-	106106	3
40	BACW10EC06C	...WASHER-	106106	3
45	233N3250-15	...BRACKET-CONN.	106106	1
50	69B46200-12	...STANDOFF	106106	3
55	233N3216-2	...BASEPLATE ASSY-	106106	1
		SUPPLIER CODE:		
		V89954		
60	PFSC35-38ASEMB	....STUD ASSY-	106106	4
		SUPPLIER CODE:		
		V72794		
		SPECIFICATION NUMBER:		
		BACS21DX1B		
65	SF6G6CBB5D	....NUT	106106	2
		SUPPLIER CODE:		
		V12324		
		SPECIFICATION NUMBER:		
		BACN10PA06-6		
70	233N3216-3	....BASEPLATE-	106106	1
		SUPPLIER CODE:		
		V89954		
75	233T3242-301	.PANEL ASSY-EEC CONT	106106	1
		SUPPLIER CODE:		
		V89954		
		ELECTRICAL EQUIP NUMBER:		
		M10761		
		COMPONENT MAINT MANUAL REF:		
		73-21-86		
		QUALIFIED I/W DATA:		
		233T3242-301 PANEL ASSY		
		IS I/W 233T3242-6 PANEL		
		ASSY T/W S233T100-1092		
		LIGHTPLATE		
		FOR OTHER SYS DETAILS SEE:		
		33-13-01-65		
		73-21-52-02		
75	233T3242-1301	.PANEL ASSY-EEC CONT	106106	1
		SUPPLIER CODE:		
		V89954		
		ELECTRICAL EQUIP NUMBER:		
		M10761		
		COMPONENT MAINT MANUAL REF:		
		73-21-86		
		FOR OTHER SYS DETAILS SEE:		
		73-21-52-02		

MISSING ITEM NUMBERS NOT APPLICABLE

– ITEM NOT ILLUSTRATED

BOEING PROPRIETARY - Copyright © - Unpublished Work - See title page for details.

FIG ITEM	PART NUMBER	1 2 3 4 5 6 7 NOMENCLATURE	EFFECT FROM TO	UNITS PER ASSY
84				
- 80	233T3242-6	..PANEL ASSY- SUPPLIER CODE: V89954 COMPONENT MAINT MANUAL REF: 73-21-86 QUALIFIED I/W DATA: 233T3242-301 PANEL ASSY IS I/W 233T3242-6 PANEL ASSY T/W S233T100-1092 LIGHTPLATE	106106	RF
85	NAS514P632-5P	...SCREW	106106	3
90	BACS12CK06U5	...SCREW-	106106	3
95	BACW10EC06C	...WASHER-	106106	3
100	233T6200-142	...BRACKET-SPRT	106106	1
105	69B46200-12	...STANDOFF	106106	3
110	233T3242-2	...BASEPLATE ASSY- SUPPLIER CODE: V89954	106106	1
115	PFSC35-38ASEMB	....STUD ASSY SUPPLIER CODE: V72794 SPECIFICATION NUMBER: BACS21DX1B	106106	4
120	SF6G6CBB5D	....NUT- SUPPLIER CODE: V12324	106106	2
125	BACP10U0187N	....BASEPLATE	106106	1
130	233N3205-302	.PANEL ASSY-HYDR SUPPLIER CODE: V89954 ELECTRICAL EQUIP NUMBER: M10050 COMPONENT MAINT MANUAL REF: 29-00-71 QUALIFIED I/W DATA: 233N3205-302 PANEL ASSY IS I/W 233N3205-27 PANEL ASSY T/W S233T100-6060 LIGHTPLATE FOR OTHER SYS DETAILS SEE: 29-11-02-03 29-11-05-04 29-11-52-07 29-31-00-01 29-32-51-03 29-33-52-03 33-13-01-65	106106	1

MISSING ITEM NUMBERS NOT APPLICABLE

- ITEM NOT ILLUSTRATED

BOEING PROPRIETARY - Copyright © - Unpublished Work - See title page for details.

FIG ITEM	PART NUMBER	1 2 3 4 5 6 7 NOMENCLATURE	EFFECT FROM TO	UNITS PER ASSY
84				
- 135	233N3205-27	..PANEL ASSY-	106106	RF
		SUPPLIER CODE:		
		V89954		
		COMPONENT MAINT MANUAL REF:		
		29-00-71		
		QUALIFIED I/W DATA:		
		233N3205-302 PANEL ASSY		
		IS I/W 233N3205-27 PANEL		
		ASSY T/W S233T100-6060		
		LIGHTPLATE		
140	NAS514P632-5	...SCREW	106106	4
145	NAS1801-06-5	...SCREW-	106106	4
		OPTIONAL PART:		
		BACS12HN06-5		
145	BACS12HN06-5	...SCREW-	106106	4
		OPTIONAL PART:		
		NAS1801-06-5		
150	MS35338-41	...WASHER-	106106	4
		OPTIONAL PART:		
		BACW10EC06S		
150	BACW10EC06S	...WASHER-	106106	4
		OPTIONAL PART:		
		MS35338-41		
155	233N3250-8	...BRACKET-SPRT	106106	1
160	69B46200-11	...STANDOFF	106106	4
165	233N3205-30	...BASEPLATE ASSY-	106106	1
		SUPPLIER CODE:		
		V89954		
170	SF6G6CBB5D	....NUT	106106	3
		SUPPLIER CODE:		
		V12324		
		SPECIFICATION NUMBER:		
		BACN10PA06-6		
175	BACP10U0600T	....PANEL ASSY	106106	1
180	233T3200-2	.PANEL ASSY	106106	1
185	BACS21DD1B	..STUD ASSY	106106	3
190	233T3200-4	..BASEPLATE	106106	1
235	BACP10U0450T	.PANEL ASSY	106106	1

MISSING ITEM NUMBERS NOT APPLICABLE

- ITEM NOT ILLUSTRATED

BOEING PROPRIETARY - Copyright © - Unpublished Work - See title page for details.

FIG ITEM	PART NUMBER	1 2 3 4 5 6 7 NOMENCLATURE	EFFECT FROM TO	UNITS PER ASSY
84				
240	233N3211-319	.PANEL ASSY-BATTERY/STBY PWR SUPPLIER CODE: V89954 ELECTRICAL EQUIP NUMBER: M10062 COMPONENT MAINT MANUAL REF: 24-33-72 FOR OTHER SYS DETAILS SEE: 24-31-01-10 24-31-03-09 24-33-04-01 33-13-01-65	106106	1
- 245	233N3211-68	..PANEL ASSY- SUPPLIER CODE: V89954 COMPONENT MAINT MANUAL REF: 24-33-72	106106	RF
250	NAS514P632-5	...SCREW-	106106	3
255	BACS12CK06U5	...SCREW-	106106	3
260	BACW10EC06C	...WASHER-	106106	3
265	233N3250-5	...BRACKET-CONN.	106106	1
270	69B46200-17	...STANDOFF	106106	3
275	233N3211-49	...BASEPLATE ASSY- SUPPLIER CODE: V89954	106106	1
280	PFSC35-38ASEMB	....STUD ASSY SUPPLIER CODE: V72794 SPECIFICATION NUMBER: BACS21DX1B	106106	4
285	SF6G6CBB5D	....NUT- SUPPLIER CODE: V12324	106106	2
290	BACP10U0225NC	....PANEL ASSY-	106106	1
295	233N3209-314	.PANEL ASSY-E/E SUPPLIER CODE: V89954 ELECTRICAL EQUIP NUMBER: M10063 COMPONENT MAINT MANUAL REF: 24-22-71 FOR OTHER SYS DETAILS SEE: 24-11-52-05 24-22-01-03 24-41-51-04 24-51-62-01 33-13-01-65	106106	1

MISSING ITEM NUMBERS NOT APPLICABLE

- ITEM NOT ILLUSTRATED

BOEING PROPRIETARY - Copyright © - Unpublished Work - See title page for details.

FIG ITEM	PART NUMBER	1 2 3 4 5 6 7 NOMENCLATURE	EFFECT FROM TO	UNITS PER ASSY
84				
- 300	233N3209-50	..PANEL ASSY- SUPPLIER CODE: V89954 COMPONENT MAINT MANUAL REF: 24-22-71	106106	RF
305	FH6C5TPKL12BN	...SCREW- SUPPLIER CODE: V12324	106106	4
310	BACS12HN06-5	...SCREW-	106106	4
315	BACW10EC06S	...WASHER-	106106	4
320	233N3209-6	...BRACKET ASSY- SUPPLIER CODE: V89954	106106	RF
325	69B46200-12	...STANDOFF	106106	4
330	233N3209-2	...BASEPLATE ASSY- SUPPLIER CODE: V89954	106106	1
335	PFSC35-38ASEMB	....STUD ASSY- SUPPLIER CODE: V72794 SPECIFICATION NUMBER: BACS21DX1B	106106	4
340	SF6G6CBB5D	....NUT SUPPLIER CODE: V12324 SPECIFICATION NUMBER: BACN10PA06-6	106106	4
345	233N3209-3	....BASEPLATE- SUPPLIER CODE: V89954	106106	1
350	233T3232-302	.PANEL ASSY-APU START SUPPLIER CODE: V89954 ELECTRICAL EQUIP NUMBER: M00001 COMPONENT MAINT MANUAL REF: 49-61-52 FOR OTHER SYS DETAILS SEE: 33-13-01-65 49-41-00-02 49-70-00-01	106106	1

MISSING ITEM NUMBERS NOT APPLICABLE

– ITEM NOT ILLUSTRATED

BOEING PROPRIETARY - Copyright © - Unpublished Work - See title page for details.

FIG ITEM	PART NUMBER	1 2 3 4 5 6 7 NOMENCLATURE	EFFECT FROM TO	UNITS PER ASSY
84				
350	233T3232-305	.PANEL ASSY-APU START SUPPLIER CODE: V89954 ELECTRICAL EQUIP NUMBER: M00001 COMPONENT MAINT MANUAL REF: 49-61-52 FOR OTHER SYS DETAILS SEE: 33-13-01-65 49-41-00-02 49-70-00-01	106106	1
- 355	233T3232-15	..PANEL ASSY- SUPPLIER CODE: V89954 COMPONENT MAINT MANUAL REF: 49-61-52 USED ON: 233T3232-302	106106	RF
- 355	233T3232-23	..PANEL ASSY- SUPPLIER CODE: V89954 COMPONENT MAINT MANUAL REF: 49-61-52 USED ON: 233T3232-305	106106	RF
360	FH6C5CPL12BN	...SCREW- SUPPLIER CODE: V12324	106106	3
365	NAS1801-06-5	...SCREW- USED ON: 233T3232-15	106106	3
365	BACS12HN06-5	...SCREW- USED ON: 233T3232-23	106106	3
370	BACW10EC06S	...WASHER- USED ON: 233T3232-15	106106	3
370	BACW10EC06CD	...WASHER- USED ON: 233T3232-23	106106	3
375	233T6200-95	...BRACKET-SPRT	106106	1
380	69B46200-11	...STANDOFF	106106	3
385	233T3232-2	...BASEPLATE ASSY- SUPPLIER CODE: V89954	106106	1
390	BACS21DD1B	....STUD ASSY	106106	4

MISSING ITEM NUMBERS NOT APPLICABLE

- ITEM NOT ILLUSTRATED

BOEING PROPRIETARY - Copyright © - Unpublished Work - See title page for details.

FIG ITEM	PART NUMBER	1 2 3 4 5 6 7 NOMENCLATURE	EFFECT FROM TO	UNITS PER ASSY
84				
395	SF6G6CBB5D	....NUT SUPPLIER CODE: V12324 SPECIFICATION NUMBER: BACN10PA06-6	106106	2
400	BACP10U0187N	....BASEPLATE	106106	1
405	980-6116-002	.PANEL ASSY-VOICE RECORDER SUPPLIER CODE: V97896 ELECTRICAL EQUIP NUMBER: M00050 COMPONENT MAINT MANUAL REF: 23-70-43 FOR BREAKDOWN SEE: 23-71-05-02	106106	RF
410	233N3214-305	.PANEL ASSY-LIGHTING CONT SUPPLIER CODE: V89954 POSITION DATA: L ELECTRICAL EQUIP NUMBER: M10056 COMPONENT MAINT MANUAL REF: 33-11-71 FOR OTHER SYS DETAILS SEE: 33-11-03-03 33-11-51-17 33-13-01-65 33-42-01-04 33-42-02-04	106106	1
- 415	233N3214-34	..PANEL ASSY- SUPPLIER CODE: V89954 COMPONENT MAINT MANUAL REF: 33-11-71	106106	RF
420	NAS514P632-5	...SCREW	106106	3
425	BACS12HN06-5	...SCREW- OPTIONAL PART: NAS1801-06-5	106106	3
425	NAS1801-06-5	...SCREW- OPTIONAL PART: BACS12HN06-5	106106	3
430	BACW10EC06S	...WASHER-	106106	3
435	233N3250-34	...BRACKET-CONN.	106106	1
440	69B46200-14	...STANDOFF	106106	3
445	233N3214-19	...BASEPLATE ASSY- SUPPLIER CODE: V89954	106106	1

MISSING ITEM NUMBERS NOT APPLICABLE

- ITEM NOT ILLUSTRATED

BOEING PROPRIETARY - Copyright © - Unpublished Work - See title page for details.

FIG ITEM	PART NUMBER	1 2 3 4 5 6 7 NOMENCLATURE	EFFECT FROM TO	UNITS PER ASSY
84				
450	PFSC35-38ASEMB	....STUD ASSY- SUPPLIER CODE: V72794 SPECIFICATION NUMBER: BACS21DX1B	106106	3
455	SF6G6CBB5D	....NUT SUPPLIER CODE: V12324 SPECIFICATION NUMBER: BACN10PA06-6	106106	3
460	233N3214-20	....BASEPLATE- SUPPLIER CODE: V89954	106106	1
465	BACP10U0337T	.PANEL ASSY	106106	1
470	233T3210-306	.PANEL ASSY-EMER LIGHTS PASS. OXY SUPPLIER CODE: V89954 ELECTRICAL EQUIP NUMBER: M00043 COMPONENT MAINT MANUAL REF: 33-51-03 FOR OTHER SYS DETAILS SEE: 33-13-01-65 33-51-08-05 35-21-51-04	106106	1
- 475	233T3210-42	..PANEL ASSY- SUPPLIER CODE: V89954 COMPONENT MAINT MANUAL REF: 33-51-03	106106	RF
480	FH6C5CPL12BN	...SCREW- SUPPLIER CODE: V12324	106106	3
487	BACS12CK06U5	...SCREW-	106106	3
490	BACW10EC06C	...WASHER-	106106	3
495	233T6200-82	...BRACKET-SPRT	106106	1
500	69B46200-10	...STANDOFF	106106	3
505	233T3210-17	...BASEPLATE ASSY- SUPPLIER CODE: V89954	106106	1
510	BACS21DD1B	....STUD ASSY	106106	4
515	SF6G6CBB5D	....NUT SUPPLIER CODE: V12324 SPECIFICATION NUMBER: BACN10PA06-6	106106	2
520	BACP10U0225N	....PANEL	106106	1

MISSING ITEM NUMBERS NOT APPLICABLE

- ITEM NOT ILLUSTRATED

BOEING PROPRIETARY - Copyright © - Unpublished Work - See title page for details.

FIG ITEM	PART NUMBER	1 2 3 4 5 6 7 NOMENCLATURE	EFFECT FROM TO	UNITS PER ASSY
84				
525	233N3223-343	.PANEL ASSY-ENG START/RAT SUPPLIER CODE: V89954 ELECTRICAL EQUIP NUMBER: M10468 FOR OTHER SYS DETAILS SEE: 29-21-54-03 33-13-01-65 73-21-52-02 74-31-51-05 80-11-09-02	106106	1
- 530	233N3223-53	..PANEL ASSY- SUPPLIER CODE: V89954 MISCELLANEOUS DATA: FOR SPARES PROCURE NEXT HIGHER ASSY COMPONENT MAINT MANUAL REF: 31-12-01	106106	RF
535	NAS514P632-5	...SCREW	106106	3
540	NAS1801-06-5	...SCREW- OPTIONAL PART: BACS12HN06-5	106106	3
540	BACS12HN06-5	...SCREW- OPTIONAL PART: NAS1801-06-5	106106	3
545	BACW10EC06CD	...WASHER-	106106	3
550	233N3223-35	...BRACKET ASSY- SUPPLIER CODE: V89954	106106	RF
555	69B46200-13	...STANDOFF	106106	3
560	233N3223-8	...BASEPLATE ASSY- SUPPLIER CODE: V89954	106106	1
565	PFSC35-38ASEMB	....STUD ASSY- SUPPLIER CODE: V72794 SPECIFICATION NUMBER: BACS21DX1B	106106	4
570	SF6G6CBB5D	....NUT SUPPLIER CODE: V12324 SPECIFICATION NUMBER: BACN10PA06-6	106106	4
575	233N3223-9	....BASEPLATE- SUPPLIER CODE: V89954	106106	1

MISSING ITEM NUMBERS NOT APPLICABLE

- ITEM NOT ILLUSTRATED

BOEING PROPRIETARY - Copyright © - Unpublished Work - See title page for details.

FIG ITEM	PART NUMBER	1 2 3 4 5 6 7 NOMENCLATURE	EFFECT FROM TO	UNITS PER ASSY
84				
580	233N3206-300	.PANEL ASSY-FUEL CONT SUPPLIER CODE: V89954 ELECTRICAL EQUIP NUMBER: M10055 COMPONENT MAINT MANUAL REF: 28-41-71 QUALIFIED I/W DATA: THE 233N3206-300 PANEL ASSY IS I/W THE 233N3206-19 PANEL ASSY T/W THE S233T100-1106 LIGHTPLATE PRE ALERT SB: 28A0105R1 PRE COMPONENT SB: 233N3206-28-03 FOR OTHER SYS DETAILS SEE: 28-22-51-02 28-41-51-03 33-13-01-65	106106	1
580	233N3206-3300	.PANEL ASSY-FUEL CONT SUPPLIER CODE: V89954 ELECTRICAL EQUIP NUMBER: M10055 COMPONENT MAINT MANUAL REF: 28-41-71 POST ALERT SB: 28A0105R1 POST COMPONENT SB: 233N3206-28-03 FOR OTHER SYS DETAILS SEE: 28-22-51-02 28-41-51-03 33-13-01-65	106106	1

MISSING ITEM NUMBERS NOT APPLICABLE

– ITEM NOT ILLUSTRATED

BOEING PROPRIETARY - Copyright © - Unpublished Work - See title page for details.

FIG ITEM	PART NUMBER	1 2 3 4 5 6 7 NOMENCLATURE	EFFECT FROM TO	UNITS PER ASSY
84				
- 585	233N3206-19	..PANEL ASSY- SUPPLIER CODE: V89954 COMPONENT MAINT MANUAL REF: 28-41-71 QUALIFIED I/W DATA: THE 233N3206-300 PANEL ASSY IS I/W THE 233N3206-19 PANEL ASSY T/W THE S233T100-1106 LIGHTPLATE PRE ALERT SB: 28A0105R1 PRE COMPONENT SB: 233N3206-28-03	106106	RF
- 585	233N3206-3019	..PANEL ASSY- SUPPLIER CODE: V89954 COMPONENT MAINT MANUAL REF: 28-41-71 POST ALERT SB: 28A0105R1 POST COMPONENT SB: 233N3206-28-03	106106	RF
590	NAS514P632-5	...SCREW	106106	4
595	BACS12HN06-5	...SCREW-	106106	4
600	BACW10EC06S	...WASHER-	106106	4
605	233N3250-64	...BRACKET	106106	1
610	69B46200-11	...STANDOFF	106106	4
615	233T3235-18	...BASEPLATE ASSY- SUPPLIER CODE: V89954	106106	1
620	PFSC35-38ASEMB	....STUD ASSY SUPPLIER CODE: V72794 SPECIFICATION NUMBER: BACS21DX1B	106106	4
625	SF6G6CBB5D	....NUT-PRESS SUPPLIER CODE: V12324	106106	4
630	BACP10U0412N	....BASEPLATE	106106	1

MISSING ITEM NUMBERS NOT APPLICABLE

- ITEM NOT ILLUSTRATED

BOEING PROPRIETARY - Copyright © - Unpublished Work - See title page for details.

FIG ITEM	PART NUMBER	1 2 3 4 5 6 7 NOMENCLATURE	EFFECT FROM TO	UNITS PER ASSY
84				
635	10080-0201	.INDICATOR ASSY-FUEL QTY SUPPLIER CODE: V89305 FUNCTIONAL DESCRIPTION: MODULE DISPLAYS INDIVIDUAL TANK QUANTITY, TOTAL QUANTITY & TEMPERATURE OF MAIN TANK SPECIFICATION NUMBER: S345N001-001 ELECTRICAL EQUIP NUMBER: M10054 COMPONENT MAINT MANUAL REF: 28-42-08 OPTIONAL PART: 10080-0101 V89305 FOR BREAKDOWN SEE: 28-41-04-01	106106	RF
635	10080-0101	.INDICATOR ASSY-FUEL QTY SUPPLIER CODE: V89305 SPECIFICATION NUMBER: S345N001-001 ELECTRICAL EQUIP NUMBER: M10054 COMPONENT MAINT MANUAL REF: 28-42-08 OPTIONAL PART: 10080-0201 V89305 FOR BREAKDOWN SEE: 28-41-04-01	106106	RF
640	233N3204-332	.PANEL ASSY-ANTI-ICE SUPPLIER CODE: V89954 ELECTRICAL EQUIP NUMBER: M10397 COMPONENT MAINT MANUAL REF: 30-11-72 FOR OTHER SYS DETAILS SEE: 30-11-51-03 30-21-51-03 33-13-01-65	106106	1

MISSING ITEM NUMBERS NOT APPLICABLE

– ITEM NOT ILLUSTRATED

BOEING PROPRIETARY - Copyright © - Unpublished Work - See title page for details.

FIG ITEM	PART NUMBER	1 2 3 4 5 6 7 NOMENCLATURE	EFFECT FROM TO	UNITS PER ASSY
84				
- 645	233N3204-36	..PANEL ASSY- SUPPLIER CODE: V89954 COMPONENT MAINT MANUAL REF: 30-11-72	106106	RF
650	NAS514P632-5	...SCREW	106106	3
655	BACS12HN06-5	...SCREW-	106106	3
660	BACW10EC06S	...WASHER-	106106	3
665	233N3250-56	...BRACKET-SPRT	106106	1
670	69B46200-11	...STANDOFF	106106	3
675	233N3204-7	...BASEPLATE ASSY- SUPPLIER CODE: V89954	106106	1
680	PFSC35-38ASEMB	....STUD ASSY- SUPPLIER CODE: V72794 SPECIFICATION NUMBER: BACS21DX1B	106106	4
685	SF6G6CBB5D	....NUT SUPPLIER CODE: V12324 SPECIFICATION NUMBER: BACN10PA06-6	106106	2
690	233N3204-8	....BASEPLATE- SUPPLIER CODE: V89954	106106	1
695	233N3201-303	.PANEL ASSY-WSHLD CLEARANCE SUPPLIER CODE: V89954 ELECTRICAL EQUIP NUMBER: M10023 COMPONENT MAINT MANUAL REF: 30-42-01 FOR OTHER SYS DETAILS SEE: 30-42-51-03 33-13-01-65	106106	1
- 700	233N3201-16	..PANEL ASSY- SUPPLIER CODE: V89954 COMPONENT MAINT MANUAL REF: 30-42-01	106106	RF
705	NAS514P632-5	...SCREW	106106	3
710	BACS12CB06-5	...SCREW	106106	3
715	MS35338-41	...WASHER	106106	3
720	233N3250-6	...BRACKET-CONN.	106106	1
725	69B46200-5	...STANDOFF	106106	3
730	233N3201-8	...BASEPLATE ASSY- SUPPLIER CODE: V89954	106106	1

MISSING ITEM NUMBERS NOT APPLICABLE

- ITEM NOT ILLUSTRATED

BOEING PROPRIETARY - Copyright © - Unpublished Work - See title page for details.

FIG ITEM	PART NUMBER	1 2 3 4 5 6 7 NOMENCLATURE	EFFECT FROM TO	UNITS PER ASSY
84				
735	BACS21DD1B	....STUD ASSY	106106	4
740	SF6G6CBB5D	....NUT	106106	3
		SUPPLIER CODE:		
		V12324		
		SPECIFICATION NUMBER:		
		BACN10PA06-6		
745	BACP10U0262N	....BASEPLATE	106106	1
750	233T3217-300	.PANEL ASSY-ANTI-COLLISION	106106	1
		SUPPLIER CODE:		
		V89954		
		ELECTRICAL EQUIP NUMBER:		
		M00056		
		COMPONENT MAINT MANUAL REF:		
		33-44-72		
		QUALIFIED I/W DATA:		
		THE 233T3217-300 PANEL		
		ASSY IS I/W THE		
		233T3217-41 PANEL ASSY		
		T/W THE S233T100-6030		
		LIGHTPLATE.		
		FOR OTHER SYS DETAILS SEE:		
		33-13-01-65		
		33-41-52-04		
		33-42-52-04		
		33-43-51-04		
		33-44-51-05		
- 755	233T3217-41	..PANEL ASSY-	106106	RF
		SUPPLIER CODE:		
		V89954		
		COMPONENT MAINT MANUAL REF:		
		33-44-72		
		QUALIFIED I/W DATA:		
		THE 233T3217-300 PANEL		
		ASSY IS I/W THE		
		233T3217-41 PANEL ASSY		
		T/W THE S233T100-6030		
		LIGHTPLATE.		
760	NAS514P632-5	...SCREW	106106	4
765	NAS1801-06-6	...SCREW-	106106	4
		OPTIONAL PART:		
		BACS12HN06-6		
765	BACS12HN06-6	...SCREW-	106106	4
		OPTIONAL PART:		
		NAS1801-06-6		
770	BACW10EC06CD	...WASHER-	106106	4
		OPTIONAL PART:		
		BACW10EC06S		

MISSING ITEM NUMBERS NOT APPLICABLE

- ITEM NOT ILLUSTRATED

BOEING PROPRIETARY - Copyright © - Unpublished Work - See title page for details.

FIG ITEM	PART NUMBER	1 2 3 4 5 6 7 NOMENCLATURE	EFFECT FROM TO	UNITS PER ASSY
84				
770	BACW10EC06S	...WASHER-	106106	4
		OPTIONAL PART:		
		BACW10EC06CD		
775	NAS620-6	...WASHER-	106106	8
		POSITION DATA:		
		FARSIDE		
780	233T6200-70	...BRACKET-SPRT	106106	1
785	69B46200-5	...STANDOFF	106106	2
790	233T6200-66	...STANDOFF	106106	2
795	233N3210-7	...BASEPLATE ASSY-	106106	1
		SUPPLIER CODE:		
		V89954		
800	BACS21DD1B	....STUD ASSY	106106	4
805	SF6G6CBB5D	....NUT	106106	4
		SUPPLIER CODE:		
		V12324		
		SPECIFICATION NUMBER:		
		BACN10PA06-6		
810	233N3210-8	....BASEPLATE-	106106	1
		SUPPLIER CODE:		
		V89954		
820	233N3202-82	.PANEL ASSY-ANN. LIGHTS	106106	1
		SUPPLIER CODE:		
		V89954		
		ELECTRICAL EQUIP NUMBER:		
		M10394		
		COMPONENT MAINT MANUAL REF:		
		33-16-71		
825	FH6C6CPL12BN	..SCREW-	106106	3
		SUPPLIER CODE:		
		V12324		
830	BACS12HN06-5	..SCREW	106106	3
835	BACW10EC06C	..WASHER	106106	3
840	233N3250-7	..BRACKET-CONN.	106106	1
845	69B46200-10	..STANDOFF	106106	3
850	233N3202-41	..BASEPLATE ASSY-	106106	1
		SUPPLIER CODE:		
		V89954		
855	PFSC35-38ASEMB	...STUD ASSY	106106	4
		SUPPLIER CODE:		
		V72794		
		SPECIFICATION NUMBER:		
		BACS21DX1B		

MISSING ITEM NUMBERS NOT APPLICABLE

– ITEM NOT ILLUSTRATED

BOEING PROPRIETARY - Copyright © - Unpublished Work - See title page for details.

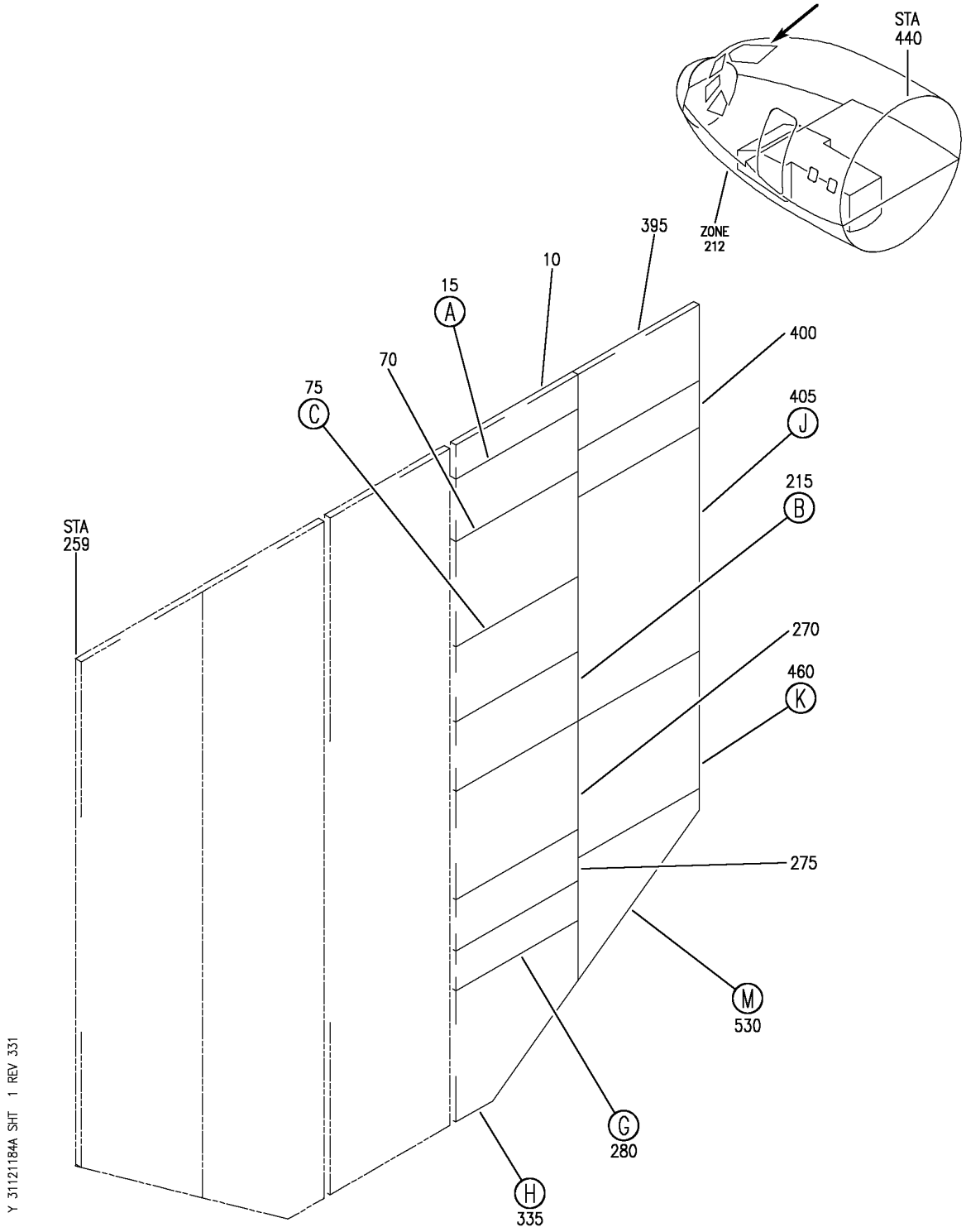

PANEL INSTL-P5 OVHD (INDICATING/RECORDING SYSTEMS ONLY)
FIGURE 84A (SHEET 1)

BOEING PROPRIETARY - Copyright © - Unpublished Work - See title page for details.

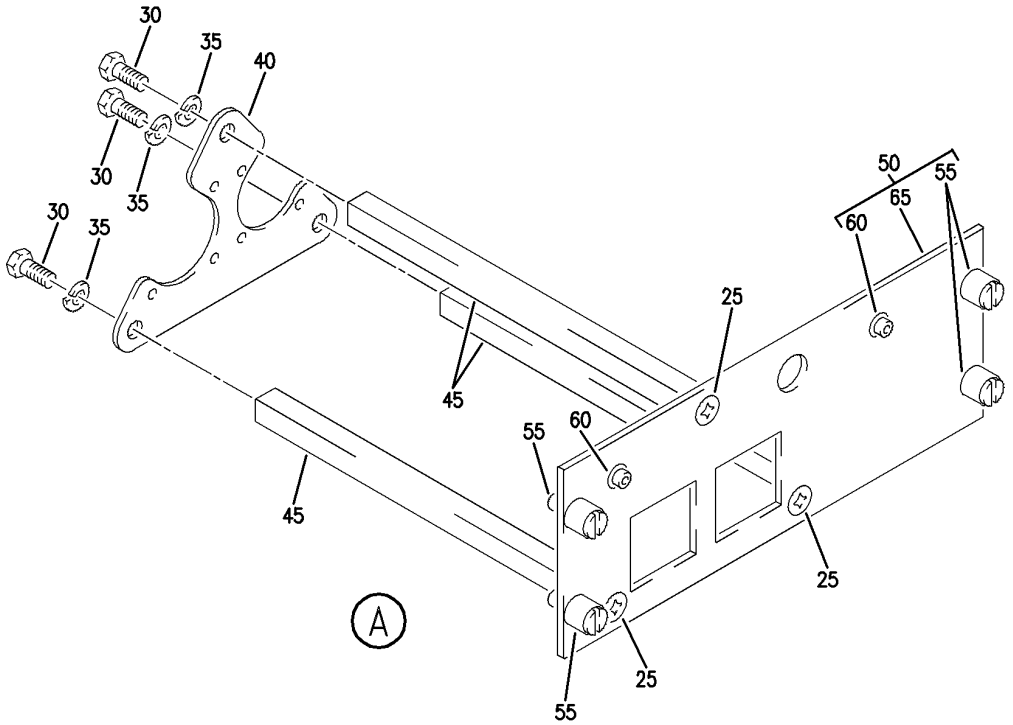

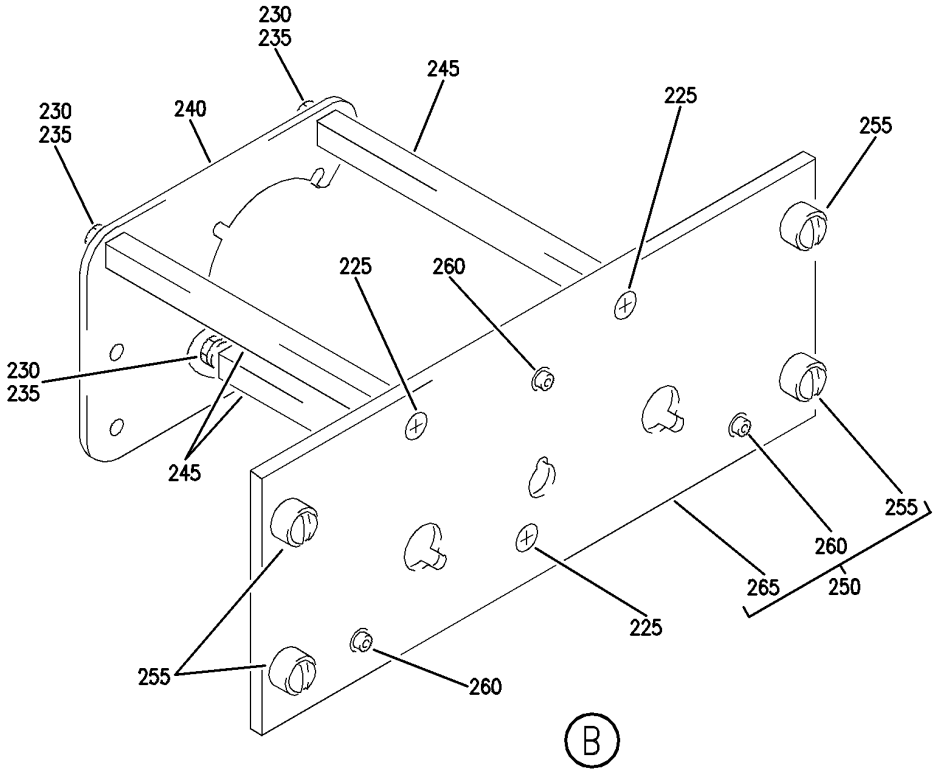

Y 31121184A SHT 2 REV 240

PANEL INSTL-P5 OVHD (INDICATING/RECORDING SYSTEMS ONLY)
FIGURE 84A (SHEET 2)

BOEING PROPRIETARY - Copyright © - Unpublished Work - See title page for details.

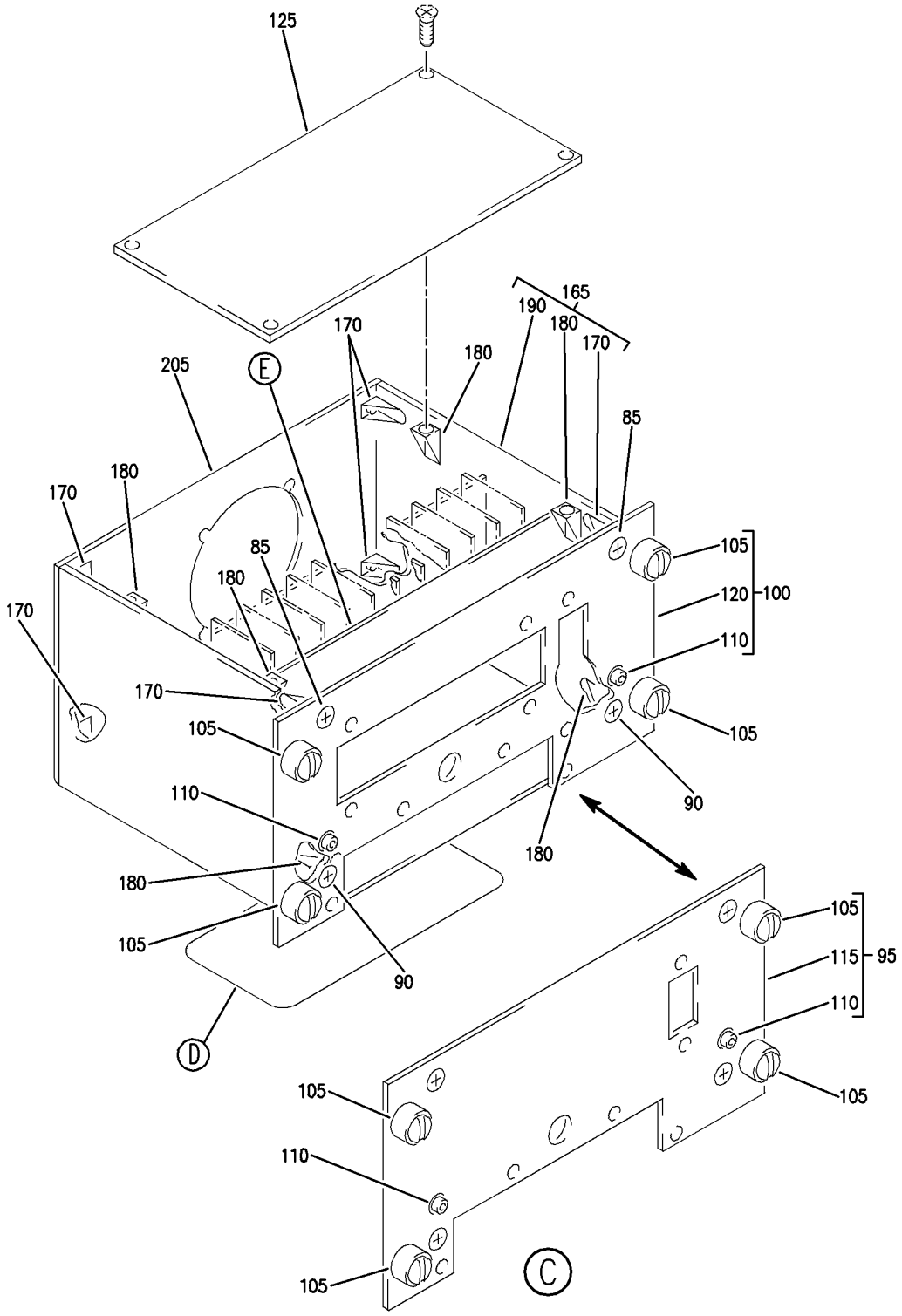

PANEL INSTL-P5 OVHD (INDICATING/RECORDING SYSTEMS ONLY)
FIGURE 84A (SHEET 3)

BOEING PROPRIETARY - Copyright © - Unpublished Work - See title page for details.

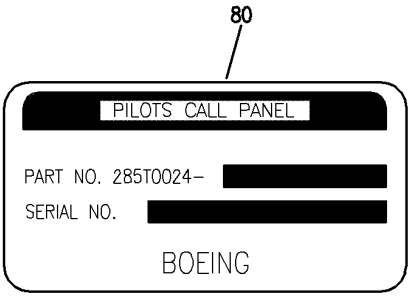

D

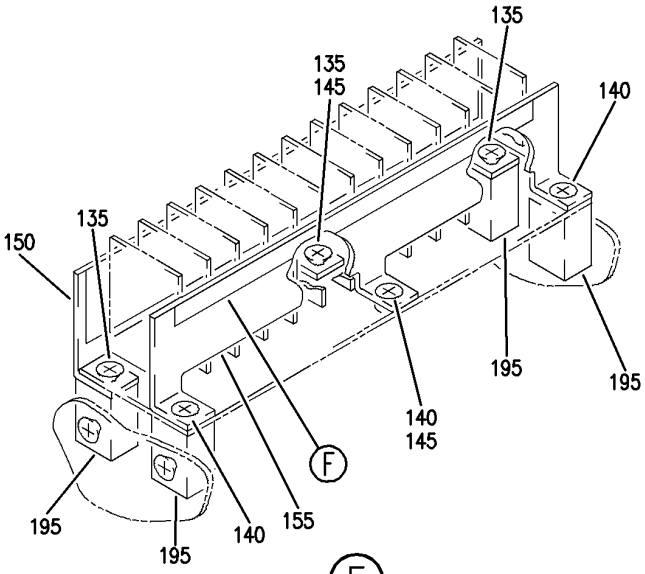

E

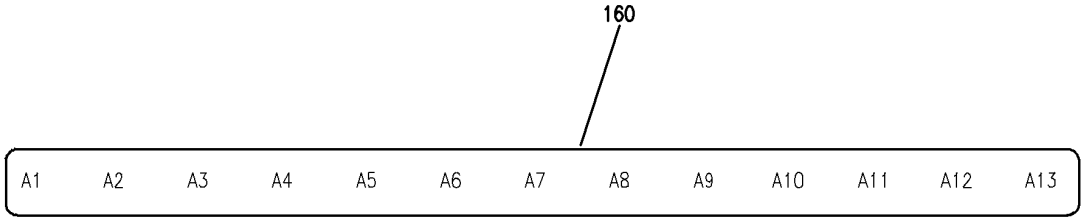

F

Y 31121184A SHT 4 REV 240

PANEL INSTL-P5 OVHD (INDICATING/RECORDING SYSTEMS ONLY)
FIGURE 84A (SHEET 4)

BOEING PROPRIETARY - Copyright © - Unpublished Work - See title page for details.

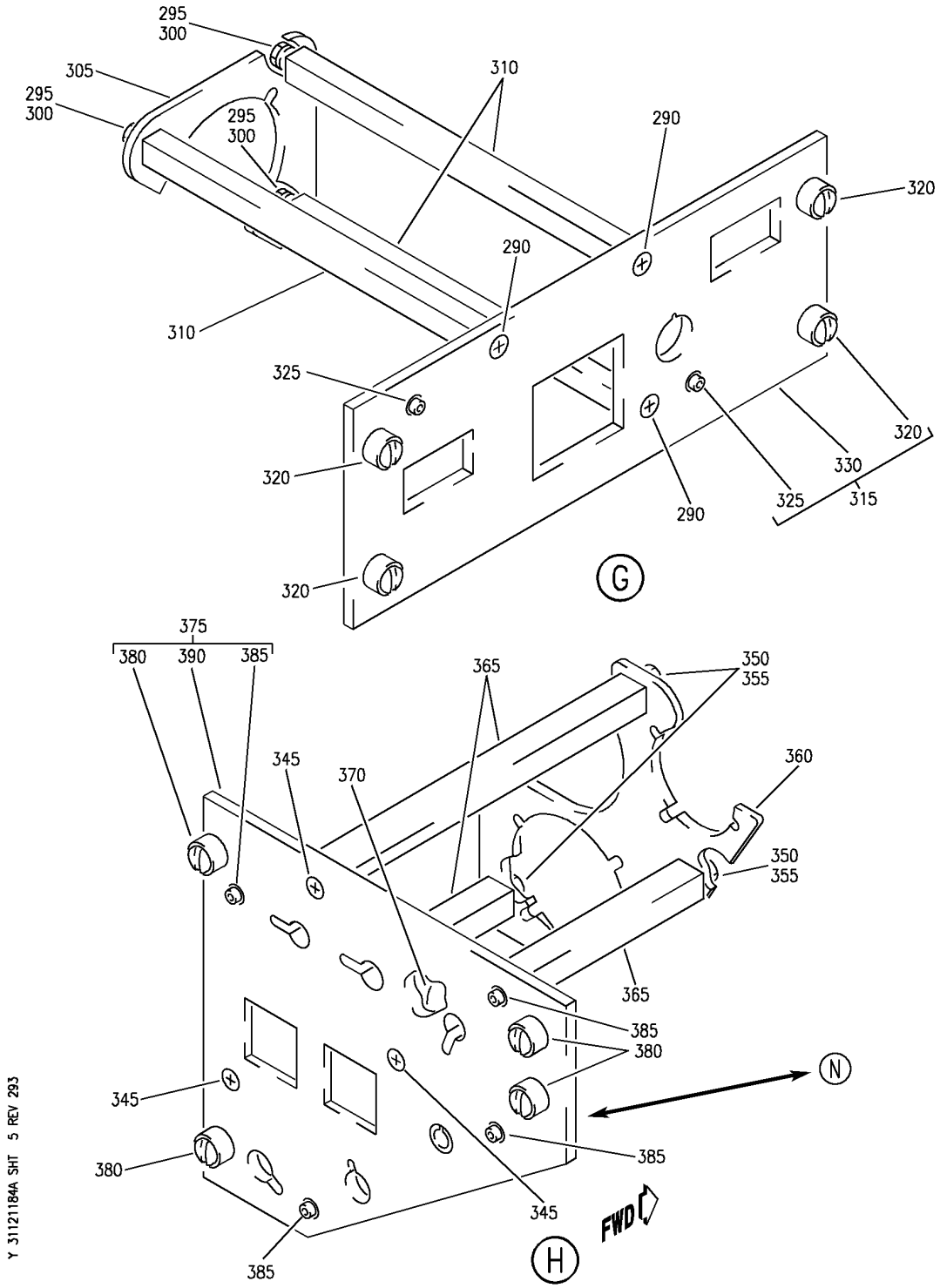

PANEL INSTL-P5 OVHD (INDICATING/RECORDING SYSTEMS ONLY)
FIGURE 84A (SHEET 5)

BOEING PROPRIETARY - Copyright © - Unpublished Work - See title page for details.

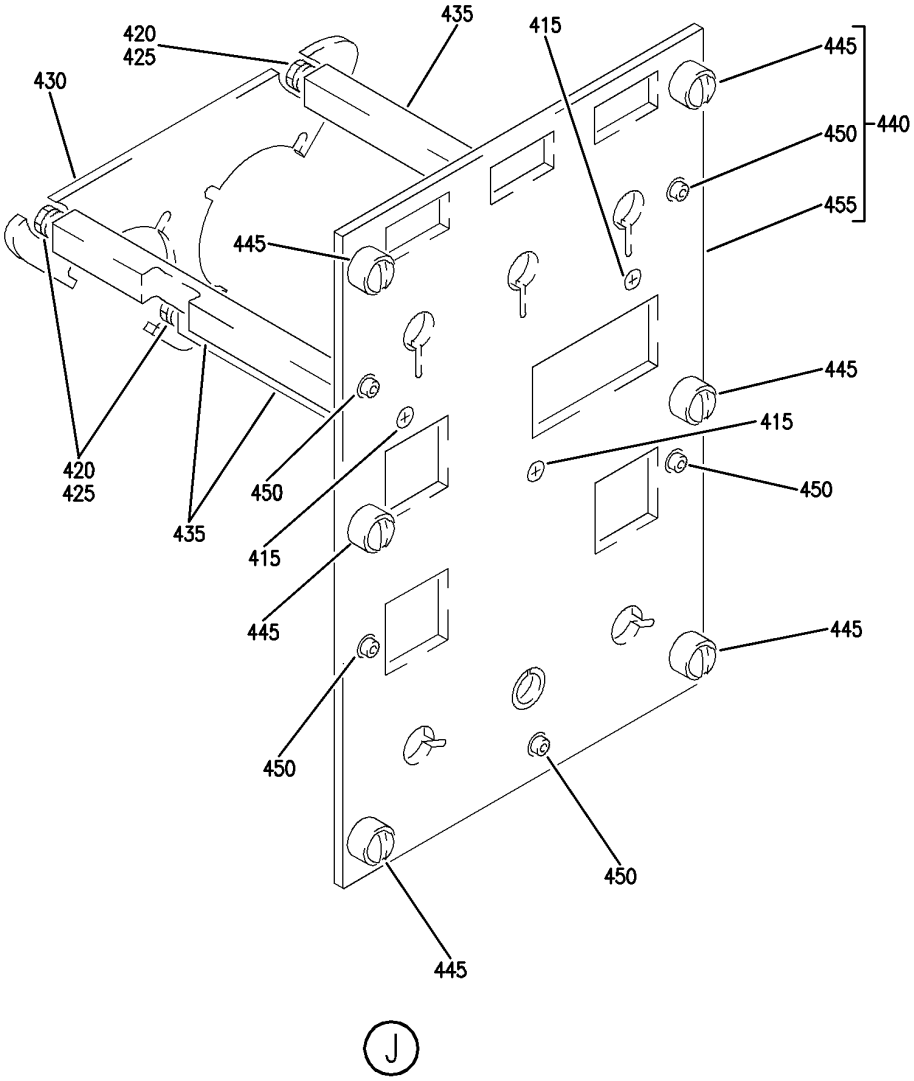

Y 31121184A SHT 6 REV 240

PANEL INSTL-P5 OVHD (INDICATING/RECORDING SYSTEMS ONLY)
FIGURE 84A (SHEET 6)

BOEING PROPRIETARY - Copyright © - Unpublished Work - See title page for details.

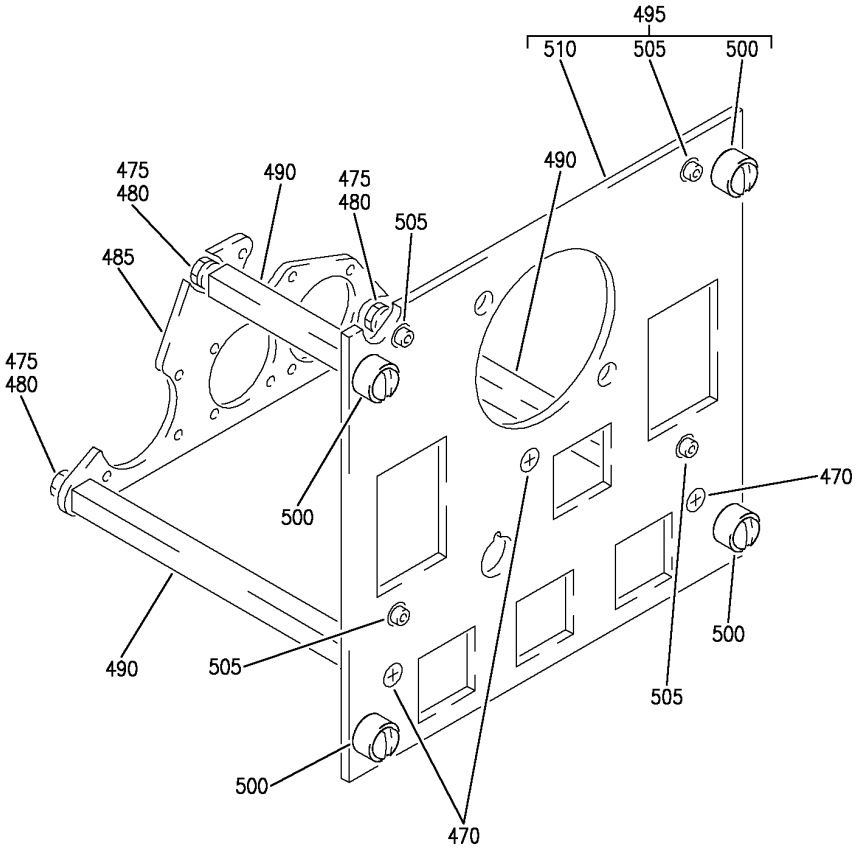

K

Y 31121184A SHT 7 REV 331

PANEL INSTL-P5 OVHD (INDICATING/RECORDING SYSTEMS ONLY)
FIGURE 84A (SHEET 7)

BOEING PROPRIETARY - Copyright © - Unpublished Work - See title page for details.

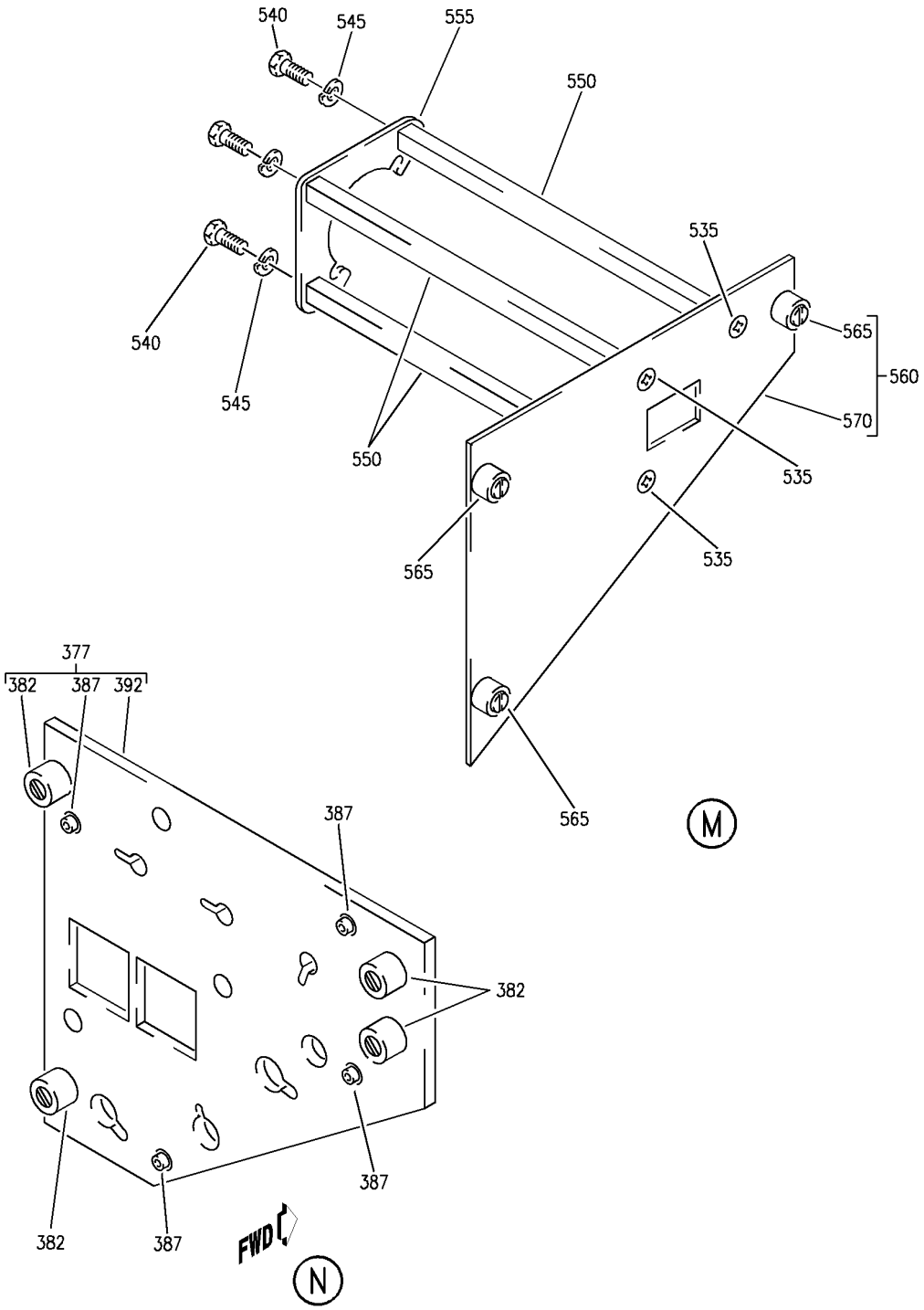

PANEL INSTL-P5 OVHD (INDICATING/RECORDING SYSTEMS ONLY)
FIGURE 84A (SHEET 8)

BOEING PROPRIETARY - Copyright © - Unpublished Work - See title page for details.

FIG ITEM	PART NUMBER	1 2 3 4 5 6 7 NOMENCLATURE	EFFECT FROM TO	UNITS PER ASSY
84A				
		PANEL INSTL-P5 OVHD (INDICATING/RECORDING SYSTEMS ONLY)	106106	
- 1	MODREF170180	PANEL INSTL-P5 OVHD (INDICATING/RECORDING SYSTEMS ONLY)	106106	1
		MODULE NUMBER: 233N3103-353 REV B		
		FOR OTHER SYS DETAILS SEE:		
		11-31-10-12		
		21-25-55-03		
		21-31-01-02		
		21-33-51-03		
		21-51-54-03		
		21-58-19-10		
		21-58-51-03		
		21-61-04-03		
		21-65-51-01		
		22-21-01-04		
		22-24-51-02		
		23-24-01-01		
		23-32-00-11		
		23-42-02-02		
		23-71-05-02		
		24-11-52-05		
		24-22-01-03		
		24-31-01-10		
		24-31-03-09		
		24-33-04-01		
		24-41-51-04		
		24-51-62-01		
		26-18-51-04		
		27-21-53-02		
		27-41-55-01		
		27-61-51-03		
		27-62-52-02		
		28-22-51-02		
		28-41-04-01		
		28-41-51-03		
		29-11-02-03		
		29-11-05-04		
		29-11-52-07		
		29-21-54-03		
		29-31-00-01		
		29-32-51-03		
		29-33-52-03		
		30-11-51-03		
		30-21-51-03		
		30-31-51-02		

MISSING ITEM NUMBERS NOT APPLICABLE

- ITEM NOT ILLUSTRATED

BOEING PROPRIETARY - Copyright © - Unpublished Work - See title page for details.

FIG ITEM	PART NUMBER	1 2 3 4 5 6 7 NOMENCLATURE	EFFECT FROM TO	UNITS PER ASSY
84A				
		30-32-51-01		
		30-33-51-02		
		30-41-51-03		
		30-42-51-03		
		32-42-52-03		
		33-11-03-03		
		33-11-51-17		
		33-13-01-65		
		33-13-02-03		
		33-16-51-03		
		33-24-51-02		
		33-41-52-04		
		33-42-01-04		
		33-42-02-04		
		33-42-52-04		
		33-43-51-04		
		33-44-51-05		
		33-45-53-03		
		33-51-08-05		
		34-21-02-01		
		35-21-51-04		
		36-11-04-01		
		36-21-00-01		
		36-21-02-05		
		36-22-51-03		
		49-41-00-02		
		49-52-00-01		
		49-70-00-01		
		52-51-51-03		
		52-71-51-02		
		73-21-52-02		
		74-31-51-05		
		75-32-00-01		
		80-11-09-02		
		FOR ADDITIONAL DETAILS SEE:		
		31-12-11-84		
10	BACP10U0150T	.PANEL ASSY	106106	1

MISSING ITEM NUMBERS NOT APPLICABLE

– ITEM NOT ILLUSTRATED

BOEING PROPRIETARY - Copyright © - Unpublished Work - See title page for details.

FIG ITEM	PART NUMBER	1 2 3 4 5 6 7 NOMENCLATURE	EFFECT FROM TO	UNITS PER ASSY
84A				
15	233N3212-302	.PANEL ASSY-WINDOW HEAT SUPPLIER CODE: V89954 ELECTRICAL EQUIP NUMBER: M10395 COMPONENT MAINT MANUAL REF: 30-41-71 OPTIONAL PART: 233N3212-300 V89954 FOR OTHER SYS DETAILS SEE: 30-41-51-03 33-13-01-65	106106	1
15	233N3212-300	.PANEL ASSY-WINDOW HEAT SUPPLIER CODE: V89954 ELECTRICAL EQUIP NUMBER: M10395 COMPONENT MAINT MANUAL REF: 30-41-71 QUALIFIED I/W DATA: THE 233N3212-300 PANEL ASSY IS I/W THE 233N3212-11 PANEL ASSY T/W THE S233T100-1073 LIGHTPLATE OPTIONAL PART: 233N3212-302 V89954 FOR OTHER SYS DETAILS SEE: 30-41-51-03 33-13-01-65	106106	1
- 20	233N3212-14	..PANEL ASSY- SUPPLIER CODE: V89954 COMPONENT MAINT MANUAL REF: 30-41-71 USED ON: 233N3212-302	106106	RF

MISSING ITEM NUMBERS NOT APPLICABLE

- ITEM NOT ILLUSTRATED

BOEING PROPRIETARY - Copyright © - Unpublished Work - See title page for details.

FIG ITEM	PART NUMBER	1 2 3 4 5 6 7 NOMENCLATURE	EFFECT FROM TO	UNITS PER ASSY
84A				
- 20	233N3212-11	..PANEL ASSY-	106106	RF
		SUPPLIER CODE:		
		V89954		
		COMPONENT MAINT MANUAL REF:		
		30-41-71		
		QUALIFIED I/W DATA:		
		THE 233N3212-300 PANEL		
		ASSY IS I/W THE		
		233N3212-11 PANEL ASSY		
		T/W THE S233T100-1073		
		LIGHTPLATE		
		USED ON:		
		233N3212-300		
25	NAS514P632-5	...SCREW	106106	3
30	NAS1801-06-5	...SCREW-	106106	3
		USED ON:		
		233N3212-11		
30	BACS12HN06-5	...SCREW-	106106	3
		OPTIONAL PART:		
		NAS1801-06-5		
		USED ON:		
		233N3212-14		
30	NAS1801-06-5	...SCREW-	106106	3
		OPTIONAL PART:		
		BACS12HN06-5		
		USED ON:		
		233N3212-14		
35	MS35338-41	...WASHER-	106106	3
		USED ON:		
		233N3212-11		
35	BACW10EC06S	...WASHER-	106106	3
		USED ON:		
		233N3212-14		
40	233N3250-11	...BRACKET-CONN.	106106	1
45	69B46200-12	...STANDOFF	106106	3
50	233N3212-2	...BASEPLATE ASSY-	106106	1
		SUPPLIER CODE:		
		V89954		
55	PFSC35-38ASEMB	....STUD ASSY-	106106	4
		SUPPLIER CODE:		
		V72794		
		SPECIFICATION NUMBER:		
		BACS21DX1B		
60	SF6G6CBB5D	....NUT	106106	2
		SUPPLIER CODE:		
		V12324		
		SPECIFICATION NUMBER:		
		BACN10PA06-6		

MISSING ITEM NUMBERS NOT APPLICABLE

- ITEM NOT ILLUSTRATED

BOEING PROPRIETARY - Copyright © - Unpublished Work - See title page for details.

FIG ITEM	PART NUMBER	1 2 3 4 5 6 7 NOMENCLATURE	EFFECT FROM TO	UNITS PER ASSY
84A				
65	233N3212-3	....BASEPLATE- SUPPLIER CODE: V89954	106106	1
70	BACP10U0487T	.PANEL ASSY	106106	1
75	285T0024-53	.MODULE ASSY-PILOTS CALL PNL SUPPLIER CODE: V89954 ELECTRICAL EQUIP NUMBER: M00051 COMPONENT MAINT MANUAL REF: 23-42-62 FOR BREAKDOWN SEE: 23-42-02-02 33-13-01-65	106106	1
75	285T0024-46	.MODULE ASSY-PILOTS CALL PNL SUPPLIER CODE: V89954 ELECTRICAL EQUIP NUMBER: M00051 COMPONENT MAINT MANUAL REF: 23-42-62 QUALIFIED I/W DATA: 285T0024-46 MAY REPLACE 285T0024-27 EXCEPT THE "FLT INT" SWITCH AND ASSOCIATED FUNCTIONALITY WILL NO LONGER BE PRESENT.285T0024-27 WITH "FLT INT" SWITCH LABELED INOP MAY REPLACE 285T0024-46. FOR BREAKDOWN SEE: 23-42-02-02 33-13-01-65	106106	1
80	BAC27TEX0933	..MARKER-ALUMINUM FOIL SUPPLIER CODE: V89954	106106	1
85	NAS514P632-5	..SCREW	106106	2
90	NAS514P440-5	..SCREW	106106	2
95	285T0157-40	..PANEL ASSY- SUPPLIER CODE: V89954 USED ON: 285T0024-53	106106	1

MISSING ITEM NUMBERS NOT APPLICABLE

— ITEM NOT ILLUSTRATED

BOEING PROPRIETARY - Copyright © - Unpublished Work - See title page for details.

FIG ITEM	PART NUMBER	1 2 3 4 5 6 7 NOMENCLATURE	EFFECT FROM TO	UNITS PER ASSY
84A				
100	285T0157-47	..PANEL ASSY- SUPPLIER CODE: V89954 USED ON: 285T0024-46	106106	1
105	PFSC35-38ASEMB	...STUD ASSY SUPPLIER CODE: V72794 SPECIFICATION NUMBER: BACS21DX1B	106106	4
110	SF6G6CBB5D	...NUT SUPPLIER CODE: V12324 SPECIFICATION NUMBER: BACN10PA06-6	106106	2
115	285T0157-41	...PANEL- SUPPLIER CODE: V89954 ALTERED FROM PART NUMBER: BACP10U0300N USED ON: 285T0157-40	106106	1
120	285T0157-48	...PANEL- SUPPLIER CODE: V89954 USED ON: 285T0157-47	106106	1
125	285T0158-29	..COVER ASSY- SUPPLIER CODE: V89954 ATTACHING PARTS	106106	1
- 130	NAS514P440-5	..SCREW -------*-------	106106	4
135	MS35214-13	..SCREW	106106	3
140	NAS514P440-5	..SCREW	106106	3
145	92-1660-40	..NUT SUPPLIER CODE: V72962 SPECIFICATION NUMBER: BACN10DN40 OPTIONAL PART: 92-1660-440 V15653	106106	2
150	285T0158-27	..BRACKET ASSY- SUPPLIER CODE: V89954	106106	1
155	285T0158-25	..BRACKET ASSY- SUPPLIER CODE: V89954	106106	1

MISSING ITEM NUMBERS NOT APPLICABLE

- ITEM NOT ILLUSTRATED

BOEING PROPRIETARY - Copyright © - Unpublished Work - See title page for details.

FIG ITEM	PART NUMBER	1 2 3 4 5 6 7 NOMENCLATURE	EFFECT FROM TO	UNITS PER ASSY
84A				
160	BAC27TEX1986	...DECAL-	106106	1
		SUPPLIER CODE:		
		V89954		
165	285T0158-23	..BRACKET ASSY-	106106	1
		SUPPLIER CODE:		
		V89954		
170	MF6000-06	...NUTPLATE	106106	6
		SUPPLIER CODE:		
		V15653		
		SPECIFICATION NUMBER:		
		BACN10KJ06		
		ATTACHING PARTS		
- 175	BACR15BA3AD	...RIVET-	106106	12
		SIZE DETERMINED ON INSTL.		
		-------*-------		
180	F22A27M22-40	...NUT-	106106	6
		SUPPLIER CODE:		
		V0217B		
		ATTACHING PARTS		
- 185	BACR15BA2AD	...RIVET-	106106	12
		SIZE DETERMINED ON INSTL.		
		-------*-------		
190	285T0158-22	...BRACKET-	106106	1
		SUPPLIER CODE:		
		V89954		
195	285T0158-21	..BLOCK-MTG	106106	4
		SUPPLIER CODE:		
		V89954		
		ATTACHING PARTS		
- 200	NAS514P440-5	..SCREW	106106	4
		-------*-------		
205	285T0158-7	..PANEL-	106106	1
		SUPPLIER CODE:		
		V89954		
		ATTACHING PARTS		
- 210	NAS1801-06-5	..SCREW	106106	4
		-------*-------		
215	233T3216-300	.PANEL ASSY-PASS. SIGNS	106106	1
		SUPPLIER CODE:		
		V89954		
		ELECTRICAL EQUIP NUMBER:		
		M00052		
		COMPONENT MAINT MANUAL REF:		
		33-24-02		
		FOR OTHER SYS DETAILS SEE:		
		33-13-01-65		
		33-24-51-02		

MISSING ITEM NUMBERS NOT APPLICABLE

- ITEM NOT ILLUSTRATED

BOEING PROPRIETARY - Copyright © - Unpublished Work - See title page for details.

FIG ITEM	PART NUMBER	1 2 3 4 5 6 7 NOMENCLATURE	EFFECT FROM TO	UNITS PER ASSY
84A				
- 220	233T3216-10	..PANEL ASSY-	106106	RF
		SUPPLIER CODE:		
		V89954		
		COMPONENT MAINT MANUAL REF:		
		33-24-02		
225	NAS514P632-5	...SCREW	106106	3
230	NAS1801-06-05	...SCREW	106106	3
235	MS35338-41	...WASHER	106106	3
240	233T6200-85	...BRACKET-SPRT	106106	1
245	69B46200-9	...STANDOFF	106106	3
250	233T3216-2	...BASEPLATE ASSY-	106106	1
		SUPPLIER CODE:		
		V89954		
255	BACS21DD1B	....STUD ASSY	106106	4
260	SF6G6CBB5D	....NUT	106106	3
		SUPPLIER CODE:		
		V12324		
		SPECIFICATION NUMBER:		
		BACN10PA06-6		
265	233T3216-3	....BASEPLATE-	106106	1
		SUPPLIER CODE:		
		V89954		
270	130502-7	.PANEL ASSY-CAB. ALTITUDE	106106	RF
		SUPPLIER CODE:		
		V64547		
		FUNCTIONAL DESCRIPTION:		
		SELECTOR CONTAINS		
		CONTROLS AND CIRCUITRY		
		NECESSARY FOR AUTOMATIC		
		OR MANUAL PRESSURE		
		SELECTION		
		SPECIFICATION NUMBER:		
		S210T160-72		
		ELECTRICAL EQUIP NUMBER:		
		M00013		
		COMPONENT MAINT MANUAL REF:		
		21-31-50		
		FOR BREAKDOWN SEE:		
		21-31-01-02		

MISSING ITEM NUMBERS NOT APPLICABLE

– ITEM NOT ILLUSTRATED

BOEING PROPRIETARY - Copyright © - Unpublished Work - See title page for details.

FIG ITEM	PART NUMBER	1 2 3 4 5 6 7 NOMENCLATURE	EFFECT FROM TO	UNITS PER ASSY
84A				
270	130502-6	.PANEL ASSY-CAB. ALTITUDE SUPPLIER CODE: V64547 SPECIFICATION NUMBER: S210T160-62 ELECTRICAL EQUIP NUMBER: M00013 COMPONENT MAINT MANUAL REF: 21-31-50 FOR BREAKDOWN SEE: 21-31-01-02	106106	RF
270	130502-5	.PANEL ASSY-CAB. ALTITUDE SUPPLIER CODE: V64547 SPECIFICATION NUMBER: S210T160-52 ELECTRICAL EQUIP NUMBER: M00013 COMPONENT MAINT MANUAL REF: 21-31-50 FOR BREAKDOWN SEE: 21-31-01-02	106106	RF
270	130502-4	.PANEL ASSY-CAB. ALTITUDE SUPPLIER CODE: V64547 SPECIFICATION NUMBER: S210T160-42 ELECTRICAL EQUIP NUMBER: M00013 COMPONENT MAINT MANUAL REF: 21-31-50 FOR BREAKDOWN SEE: 21-31-01-02	106106	RF

MISSING ITEM NUMBERS NOT APPLICABLE

— ITEM NOT ILLUSTRATED

BOEING PROPRIETARY - Copyright © - Unpublished Work - See title page for details.

FIG ITEM	PART NUMBER	1 2 3 4 5 6 7 NOMENCLATURE	EFFECT FROM TO	UNITS PER ASSY
84A				
275	SETL0C420M	.PANEL ASSY-CAB. PRESSURE GAUGES SUPPLIER CODE: V61349 FUNCTIONAL DESCRIPTION: PROVIDES CABIN PRESSURE RATE OF CLIMB OR DESCENT CABIN TO AMBIENT DIFFERENTIAL PRESSURE AND CABIN ALTITUDE SPECIFICATION NUMBER: S231N210-14 ELECTRICAL EQUIP NUMBER: M00019 COMPONENT MAINT MANUAL REF: 21-33-07 FOR BREAKDOWN SEE: 21-33-51-03	106106	RF
280	233N3203-337	.PANEL ASSY-EQPT COOLING SUPPLIER CODE: V89954 ELECTRICAL EQUIP NUMBER: M10067 COMPONENT MAINT MANUAL REF: 21-58-71 FOR OTHER SYS DETAILS SEE: 11-31-10-12 21-33-51-03 21-58-19-10 21-58-51-03 33-13-01-65	106106	1
- 285	233N3203-37	..PANEL ASSY- SUPPLIER CODE: V89954 COMPONENT MAINT MANUAL REF: 21-58-71	106106	RF
290	NAS514P632-6	...SCREW	106106	3
295	BACS12HN06-5	...SCREW-	106106	3
300	BACW10EC06S	...WASHER-	106106	3
305	233N3250-10	...BRACKET-CONN.	106106	1
310	69B46200-11	...STANDOFF	106106	3
315	233N3203-19	...BASEPLATE ASSY- SUPPLIER CODE: V89954	106106	1
320	PFSC35-38ASEMB	....STUD ASSY- SUPPLIER CODE: V72794 SPECIFICATION NUMBER: BACS21DX1B	106106	4

MISSING ITEM NUMBERS NOT APPLICABLE

- ITEM NOT ILLUSTRATED

BOEING PROPRIETARY - Copyright © - Unpublished Work - See title page for details.

FIG ITEM	PART NUMBER	1 2 3 4 5 6 7 NOMENCLATURE	EFFECT FROM TO	UNITS PER ASSY
84A				
325	SF6G6CBB5D	....NUT SUPPLIER CODE: V12324 SPECIFICATION NUMBER: BACN10PA06-6	106106	2
330	233N3203-21	....BASEPLATE- SUPPLIER CODE: V89954	106106	1
335	233N3221-302	.PANEL ASSY-LIGHTING CONT SUPPLIER CODE: V89954 POSITION DATA: R ELECTRICAL EQUIP NUMBER: M10057 COMPONENT MAINT MANUAL REF: 33-11-72 QUALIFIED I/W DATA: 233N3221-302 PANEL ASSY IS I/W 233N3221-61 PANEL ASSY T/W S233T100-6039 LIGHTPLATE AND (3) RD241-119 KNOBS AND (1) BP248-127 KNOB FOR OTHER SYS DETAILS SEE: 33-11-51-17 33-13-01-65 33-13-02-03 33-16-51-03 33-45-53-03 52-51-51-03	106106	1
335	233N3221-326	.PANEL ASSY-LIGHTING CONT SUPPLIER CODE: V89954 POSITION DATA: R ELECTRICAL EQUIP NUMBER: M10057 COMPONENT MAINT MANUAL REF: 33-11-72 FOR OTHER SYS DETAILS SEE: 33-11-51-17 33-13-01-65 33-13-02-03 33-16-51-03 33-45-53-03 52-51-51-03	106106	1

MISSING ITEM NUMBERS NOT APPLICABLE

— ITEM NOT ILLUSTRATED

BOEING PROPRIETARY - Copyright © - Unpublished Work - See title page for details.

FIG ITEM	PART NUMBER	1 2 3 4 5 6 7 NOMENCLATURE	EFFECT FROM TO	UNITS PER ASSY
84A				
- 340	233N3221-61	..PANEL ASSY- SUPPLIER CODE: V89954 COMPONENT MAINT MANUAL REF: 33-11-72 QUALIFIED I/W DATA: 233N3221-302 PANEL ASSY IS I/W 233N3221-61 PANEL ASSY T/W S233T100-6039 LIGHTPLATE AND (3) RD241-119 KNOBS AND (1) BP248-127 KNOB USED ON: 233N3221-302	106106	RF
- 340	233N3221-110	..PANEL ASSY- SUPPLIER CODE: V89954 COMPONENT MAINT MANUAL REF: 33-11-72 USED ON: 233N3221-326	106106	RF
345	NAS514P632-5	...SCREW- USED ON: 233N3221-61	106106	3
345	FH6C5CPL12BN	...SCREW- SUPPLIER CODE: V12324 OPTIONAL PART: NAS514P632-6 USED ON: 233N3221-110	106106	3
345	NAS514P632-6	...SCREW- OPTIONAL PART: FH6C5CPL12BN V12324 USED ON: 233N3221-110	106106	3
350	BACS12HN06-5	...SCREW-	106106	3
355	BACW10EC06S	...WASHER- USED ON: 233N3221-61	106106	3
355	BACW10EC06CD	...WASHER- USED ON: 233N3221-110	106106	3
360	233N3250-48	...BRACKET-CONN.	106106	1
365	69B46200-10	...STANDOFF	106106	3

MISSING ITEM NUMBERS NOT APPLICABLE

- ITEM NOT ILLUSTRATED

BOEING PROPRIETARY - Copyright © - Unpublished Work - See title page for details.

FIG ITEM	PART NUMBER	1 2 3 4 5 6 7 NOMENCLATURE	EFFECT FROM TO	UNITS PER ASSY
84A				
370	65B40112-12	...SPACER- OPTIONAL PART: 233N3221-42 V89954	106106	1
370	233N3221-42	...SPACER- SUPPLIER CODE: V89954 OPTIONAL PART: 65B40112-12	106106	1
375	233N3221-33	...BASEPLATE ASSY- SUPPLIER CODE: V89954 USED ON: 233N3221-61	106106	1
377	233N3221-104	...BASEPLATE ASSY- SUPPLIER CODE: V89954 USED ON: 233N3221-110	106106	1
380	BACS21DD1B	....STUD ASSY- OPTIONAL PART: BACS21DX1B USED ON: 233N3221-33	106106	4
380	PFSC35-38ASEMB	....STUD ASSY- SUPPLIER CODE: V72794 SPECIFICATION NUMBER: BACS21DX1B OPTIONAL PART: BACS21DD1B USED ON: 233N3221-33	106106	4
382	PFSC35-38ASEMB	....STUD ASSY- SUPPLIER CODE: V72794 SPECIFICATION NUMBER: BACS21DX1B USED ON: 233N3221-104	106106	4
385	SF6G6CBB5D	....NUT- SUPPLIER CODE: V12324 SPECIFICATION NUMBER: BACN10PA06-6 USED ON: 233N3221-33	106106	4

MISSING ITEM NUMBERS NOT APPLICABLE

– ITEM NOT ILLUSTRATED

BOEING PROPRIETARY - Copyright © - Unpublished Work - See title page for details.

FIG ITEM	PART NUMBER	1 2 3 4 5 6 7 NOMENCLATURE	EFFECT FROM TO	UNITS PER ASSY
84A				
387	SF6G6CBB5D	....NUT-	106106	4
		SUPPLIER CODE:		
		V12324		
		USED ON:		
		233N3221-104		
390	233N3221-37	....BASEPLATE-	106106	1
		SUPPLIER CODE:		
		V89954		
		USED ON:		
		233N3221-33		
392	233N3221-105	....BASEPLATE-	106106	1
		SUPPLIER CODE:		
		V89954		
		USED ON:		
		233N3221-104		
395	BACP10U0300T	.PANEL ASSY	106106	1
400	2263-01-1	.INDICATOR ASSY-COMPT TEMP	106106	RF
		SUPPLIER CODE:		
		V52013		
		FUNCTIONAL DESCRIPTION:		
		INDICATOR SHOWS		
		COMPARTMENT TEMPERATURE		
		FOR EA OF THE THREE		
		CABIN ZONES		
		SPECIFICATION NUMBER:		
		S231N211-3		
		ELECTRICAL EQUIP NUMBER:		
		M10078		
		COMPONENT MAINT MANUAL REF:		
		21-61-02		
		FOR BREAKDOWN SEE:		
		21-65-51-01		
400	20-210-01	.INDICATOR ASSY-COMPT TEMP	106106	RF
		SUPPLIER CODE:		
		V35012		
		SPECIFICATION NUMBER:		
		S231N211-2		
		ELECTRICAL EQUIP NUMBER:		
		M10078		
		COMPONENT MAINT MANUAL REF:		
		21-65-01		
		FOR BREAKDOWN SEE:		
		21-65-51-01		

MISSING ITEM NUMBERS NOT APPLICABLE

— ITEM NOT ILLUSTRATED

BOEING PROPRIETARY - Copyright © - Unpublished Work - See title page for details.

FIG ITEM	PART NUMBER	1 2 3 4 5 6 7 NOMENCLATURE	EFFECT FROM TO	UNITS PER ASSY
84A				
405	233N3217-300	.PANEL ASSY-AIR CONDITIONING SUPPLIER CODE: V89954 ELECTRICAL EQUIP NUMBER: M00014 COMPONENT MAINT MANUAL REF: 21-51-71 QUALIFIED I/W DATA: THE 233N3217-300 PANEL ASSY IS I/W THE 233N3217-15 PANEL ASSY T/W THE S233T100-6014 LIGHTPLATE AND (2) BP248-127 KNOBS AND (3) BP260-113 KNOBS FOR OTHER SYS DETAILS SEE: 21-25-55-03 21-51-54-03 21-61-04-03 33-13-01-65	106106	1
- 410	233N3217-15	..PANEL ASSY- SUPPLIER CODE: V89954 COMPONENT MAINT MANUAL REF: 21-51-71 QUALIFIED I/W DATA: THE 233N3217-300 PANEL ASSY IS I/W THE 233N3217-15 PANEL ASSY T/W THE S233T100-6014 LIGHTPLATE AND (2) BP248-127 KNOBS AND (3) BP260-113 KNOBS	106106	RF
415	NAS514P632-5	...SCREW	106106	3
420	NAS1801-06-5	...SCREW- OPTIONAL PART: BACS12HN06-5	106106	3
420	BACS12HN06-5	...SCREW- OPTIONAL PART: NAS1801-06-5	106106	3
425	BACW10EC06S	...WASHER-	106106	3
430	233N3250-13	...BRACKET	106106	1
435	69B46200-14	...STANDOFF	106106	3

MISSING ITEM NUMBERS NOT APPLICABLE

- ITEM NOT ILLUSTRATED

BOEING PROPRIETARY - Copyright © - Unpublished Work - See title page for details.

FIG ITEM	PART NUMBER	1 2 3 4 5 6 7 NOMENCLATURE	EFFECT FROM TO	UNITS PER ASSY
84A				
440	233N3217-9	...BASEPLATE ASSY- SUPPLIER CODE: V89954 OPTIONAL PART: 233N3217-2 V89954	106106	1
440	233N3217-2	...BASEPLATE ASSY- SUPPLIER CODE: V89954 OPTIONAL PART: 233N3217-9 V89954	106106	1
445	PFSC35-38ASEMB	....STUD ASSY- SUPPLIER CODE: V72794 SPECIFICATION NUMBER: BACS21DX1B	106106	6
450	SF6G6CBB5D	....NUT SUPPLIER CODE: V12324 SPECIFICATION NUMBER: BACN10PA06-6	106106	5
455	233N3217-10	....BASEPLATE- SUPPLIER CODE: V89954 USED ON: 233N3217-9	106106	1
455	233N3217-3	....BASEPLATE- SUPPLIER CODE: V89954 USED ON: 233N3217-2	106106	1
460	233N3215-303	.PANEL ASSY-BLEED AIR SUPPLIER CODE: V89954 ELECTRICAL EQUIP NUMBER: M10259 COMPONENT MAINT MANUAL REF: 36-11-71 FOR OTHER SYS DETAILS SEE: 26-18-51-04 33-13-01-65 36-11-04-01 36-21-00-01 36-21-02-05 36-22-51-03 49-52-00-01 75-32-00-01	106106	1

MISSING ITEM NUMBERS NOT APPLICABLE

— ITEM NOT ILLUSTRATED

BOEING PROPRIETARY - Copyright © - Unpublished Work - See title page for details.

FIG ITEM	PART NUMBER	1 2 3 4 5 6 7 NOMENCLATURE	EFFECT FROM TO	UNITS PER ASSY
84A				
- 465	233N3215-22	..PANEL ASSY- SUPPLIER CODE: V89954 MISCELLANEOUS DATA: FOR SPARES PROCURE NEXT HIGHER ASSY COMPONENT MAINT MANUAL REF: 36-11-71	106106	RF
470	FH6C5TPKL12BN	...SCREW- SUPPLIER CODE: V12324	106106	3
475	NAS1801-06-5	...SCREW- OPTIONAL PART: BACS12HN06-5	106106	3
475	BACS12HN06-5	...SCREW- OPTIONAL PART: NAS1801-06-5	106106	3
480	BACW10EC06S	...WASHER-	106106	3
485	233N3250-39	...BRACKET-CONN.	106106	1
490	69B46200-11	...STANDOFF	106106	3
495	233N3215-10	...BASEPLATE ASSY- SUPPLIER CODE: V89954	106106	1
500	PFSC35-38ASEMB	....STUD ASSY- SUPPLIER CODE: V72794 SPECIFICATION NUMBER: BACS21DX1B	106106	4
505	SF6G6CBB5D	....NUT SUPPLIER CODE: V12324 SPECIFICATION NUMBER: BACN10PA06-6	106106	4
510	233N3215-11	....BASEPLATE- SUPPLIER CODE: V89954	106106	1
530	233T3230-22	.PANEL ASSY-ENTERTAINMENT ELECTRICAL EQUIP NUMBER: M01111 COMPONENT MAINT MANUAL REF: 23-32-52 FOR BREAKDOWN SEE: 23-32-00-11	106106	1
535	NAS514P632-5	..SCREW	106106	3
540	BACS12CB06-5	..SCREW	106106	3
545	MS35338-41	..WASHER	106106	3
550	69B46200-10	..STANDOFF	106106	3
555	233T6200-27	..BRACKET-SPRT	106106	1
560	233T3230-2	..BASEPLATE ASSY	106106	1

MISSING ITEM NUMBERS NOT APPLICABLE

- ITEM NOT ILLUSTRATED

BOEING PROPRIETARY - Copyright © - Unpublished Work - See title page for details.

FIG ITEM	PART NUMBER	1 2 3 4 5 6 7 NOMENCLATURE	EFFECT FROM TO	UNITS PER ASSY
84A				
565	BACS21DD1B	...STUD ASSY SUPPLIER CODE: V08524 SPECIFICATION NUMBER: BACS21DD1B	106106	3
570	233T3200-3	...BASEPLATE	106106	1

MISSING ITEM NUMBERS NOT APPLICABLE

– ITEM NOT ILLUSTRATED

BOEING PROPRIETARY - Copyright © - Unpublished Work - See title page for details.

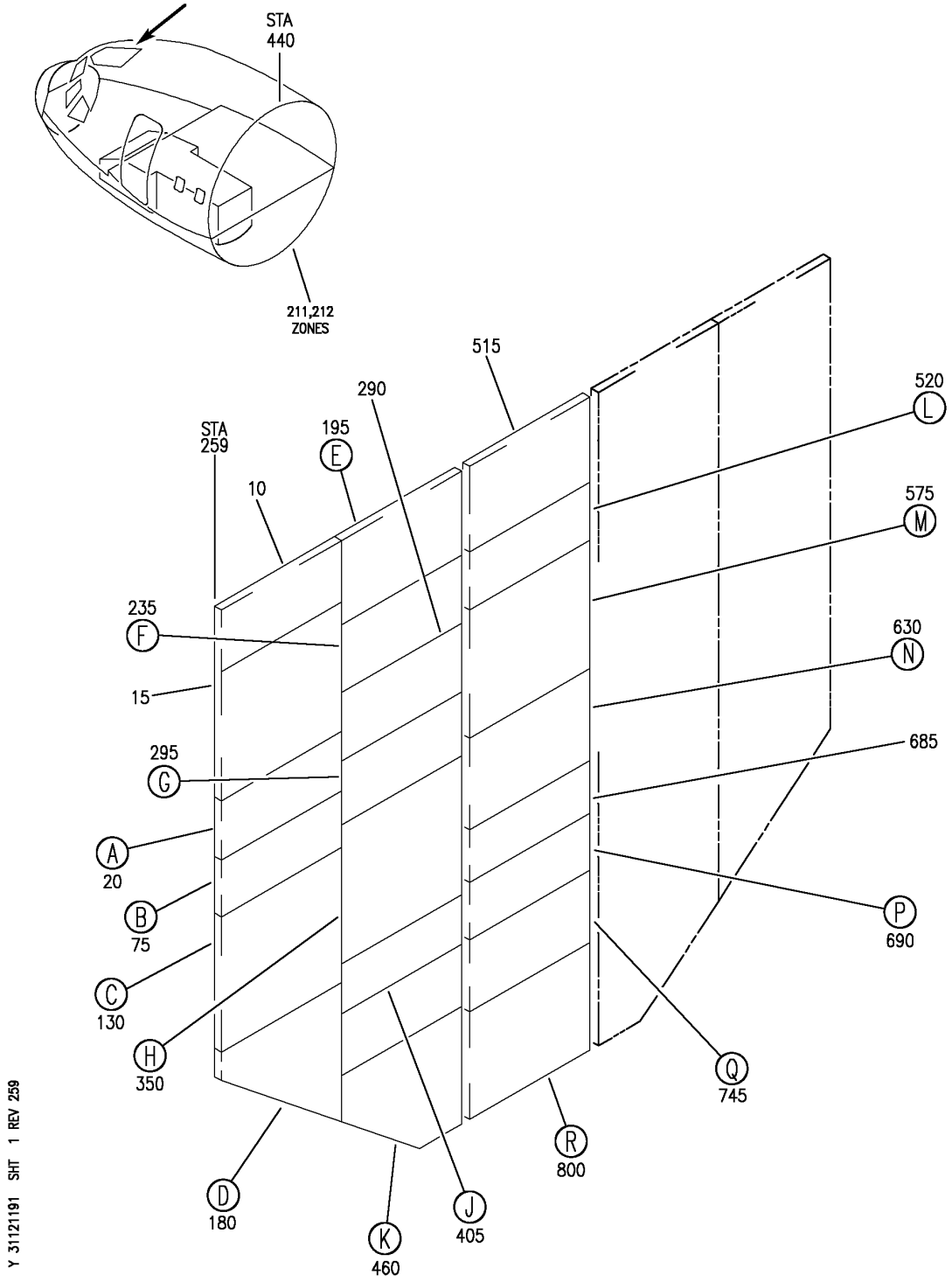

PANEL INSTL-P5 OVHD (INDICATING/RECORDING SYSTEMS ONLY)
FIGURE 91 (SHEET 1)

BOEING PROPRIETARY - Copyright © - Unpublished Work - See title page for details.

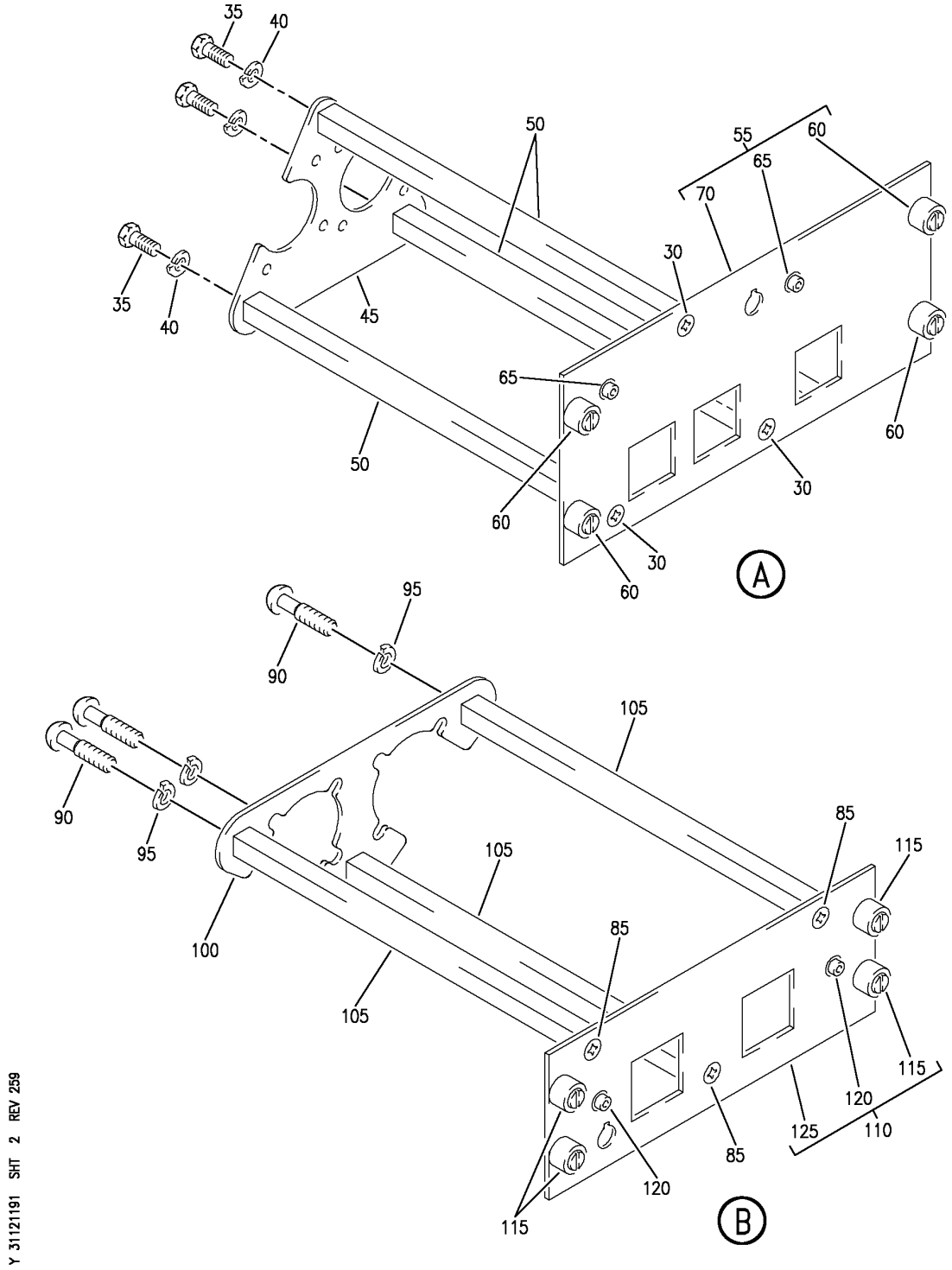

PANEL INSTL-P5 OVHD (INDICATING/RECORDING SYSTEMS ONLY)
FIGURE 91 (SHEET 2)

BOEING PROPRIETARY - Copyright © - Unpublished Work - See title page for details.

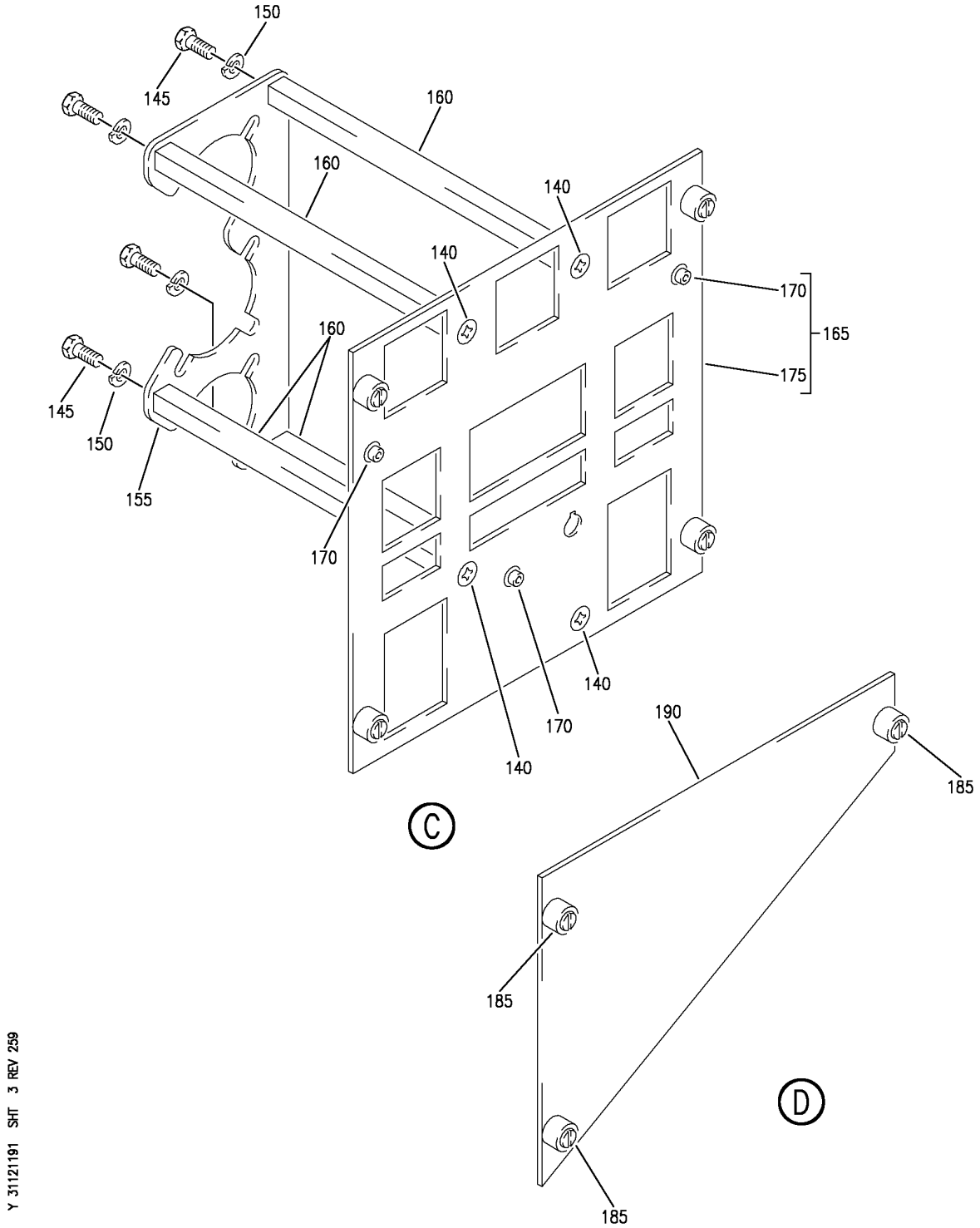

PANEL INSTL-P5 OVHD (INDICATING/RECORDING SYSTEMS ONLY)
FIGURE 91 (SHEET 3)

BOEING PROPRIETARY - Copyright © - Unpublished Work - See title page for details.

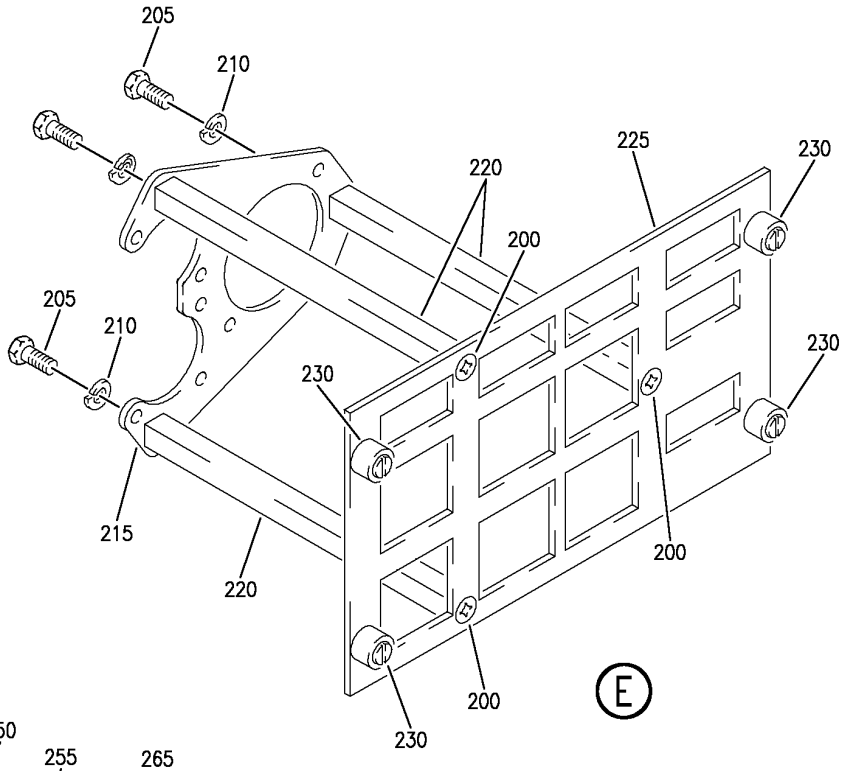

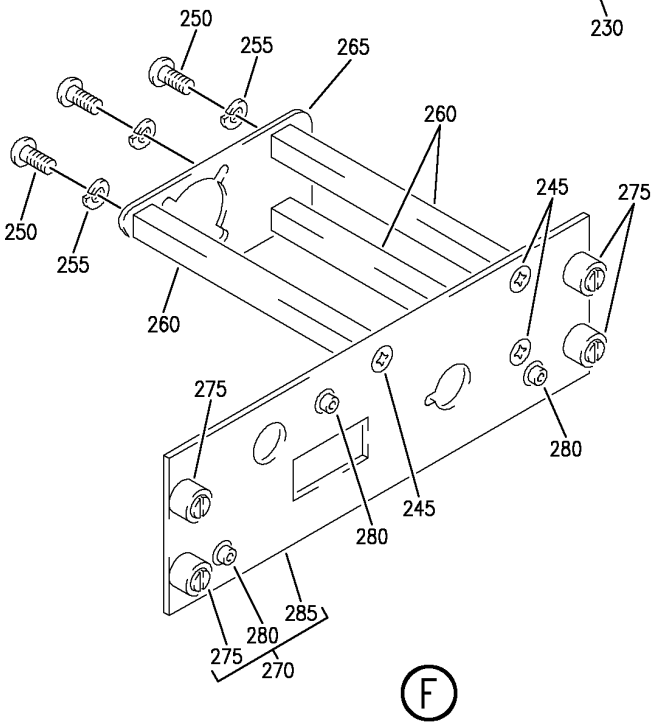

Y 31121191 SHT 4 REV 259

PANEL INSTL-P5 OVHD (INDICATING/RECORDING SYSTEMS ONLY)
FIGURE 91 (SHEET 4)

BOEING PROPRIETARY - Copyright © - Unpublished Work - See title page for details.

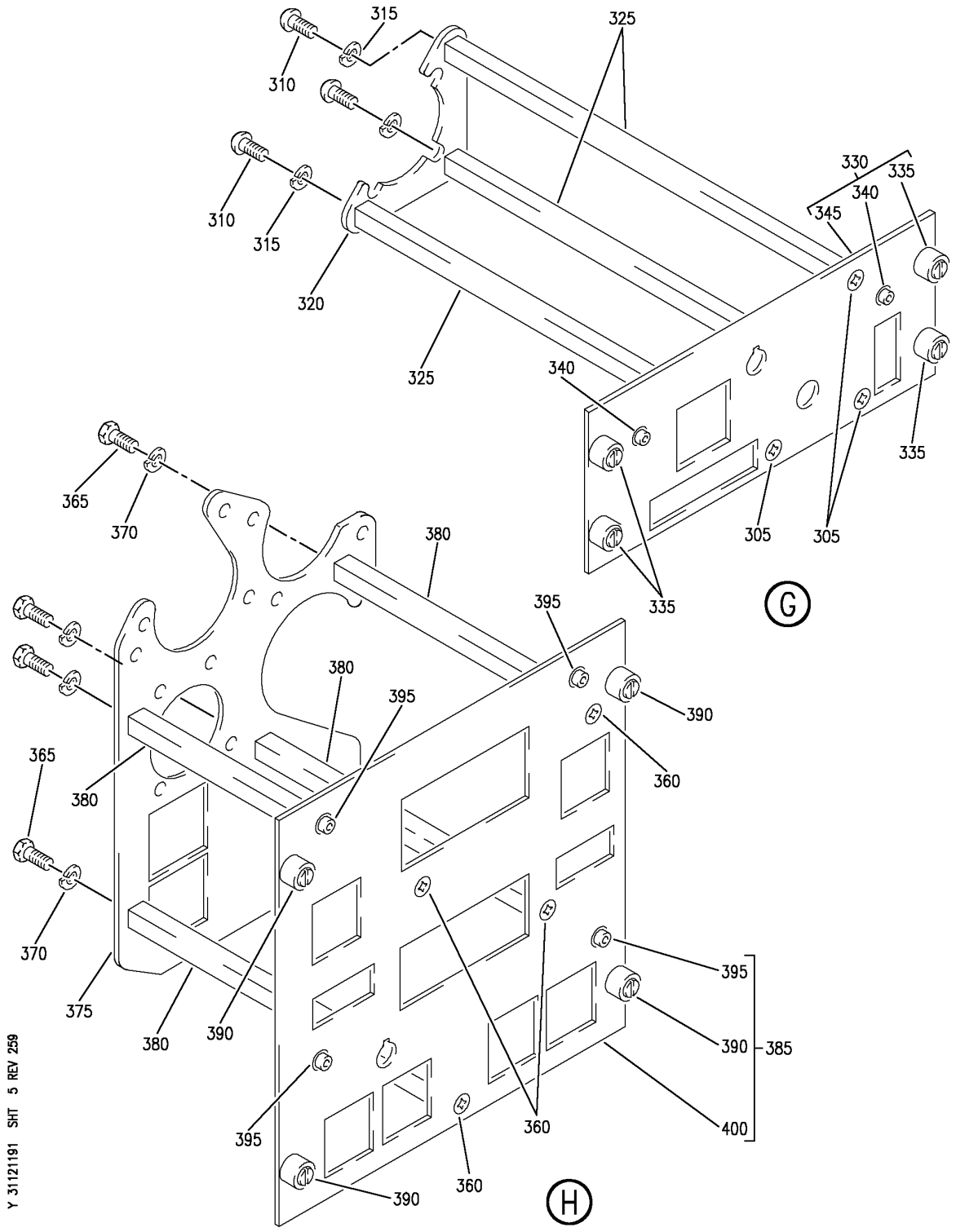

PANEL INSTL-P5 OVHD (INDICATING/RECORDING SYSTEMS ONLY)
FIGURE 91 (SHEET 5)

BOEING PROPRIETARY - Copyright © - Unpublished Work - See title page for details.

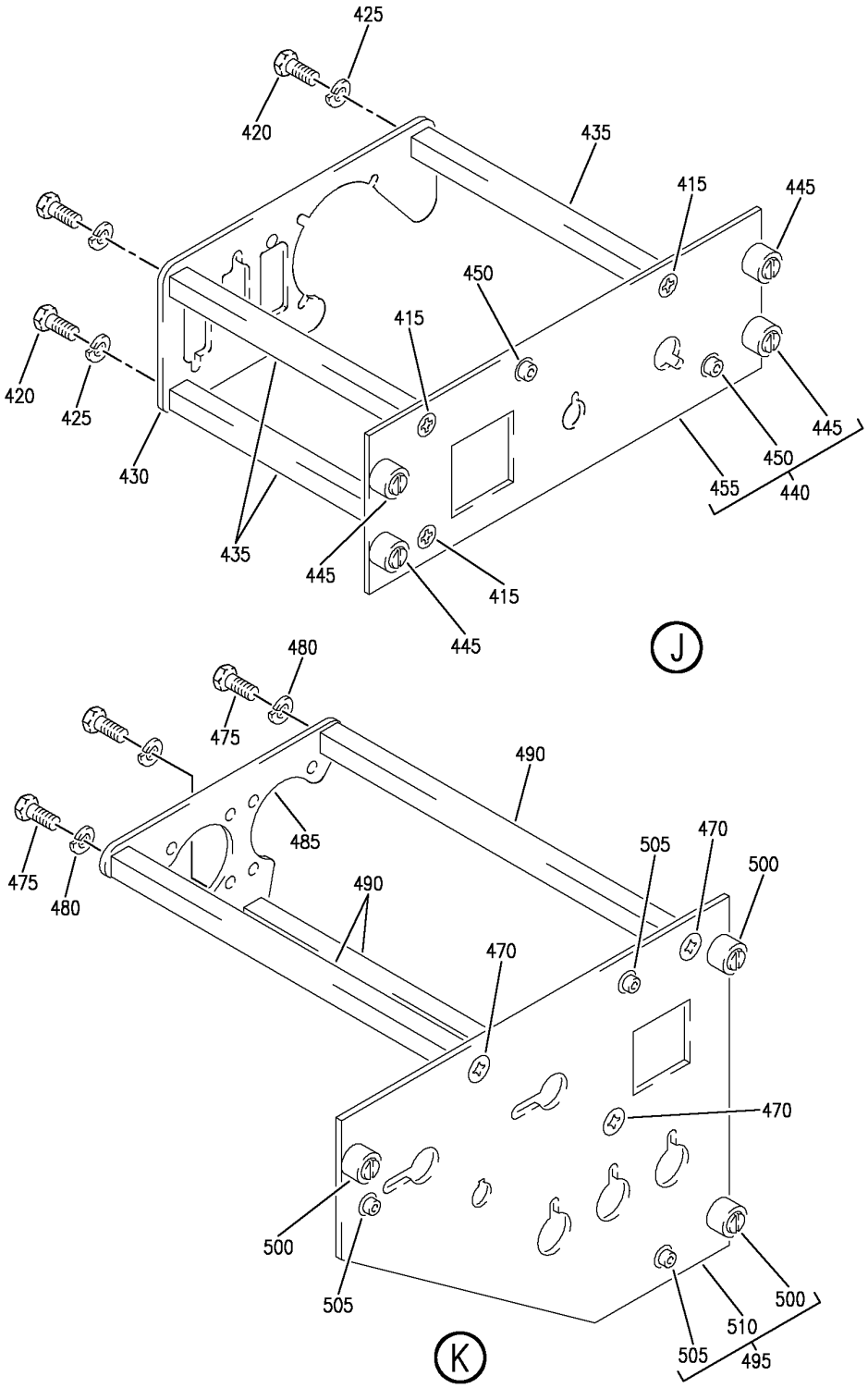

PANEL INSTL-P5 OVHD (INDICATING/RECORDING SYSTEMS ONLY)
FIGURE 91 (SHEET 6)

BOEING PROPRIETARY - Copyright © - Unpublished Work - See title page for details.

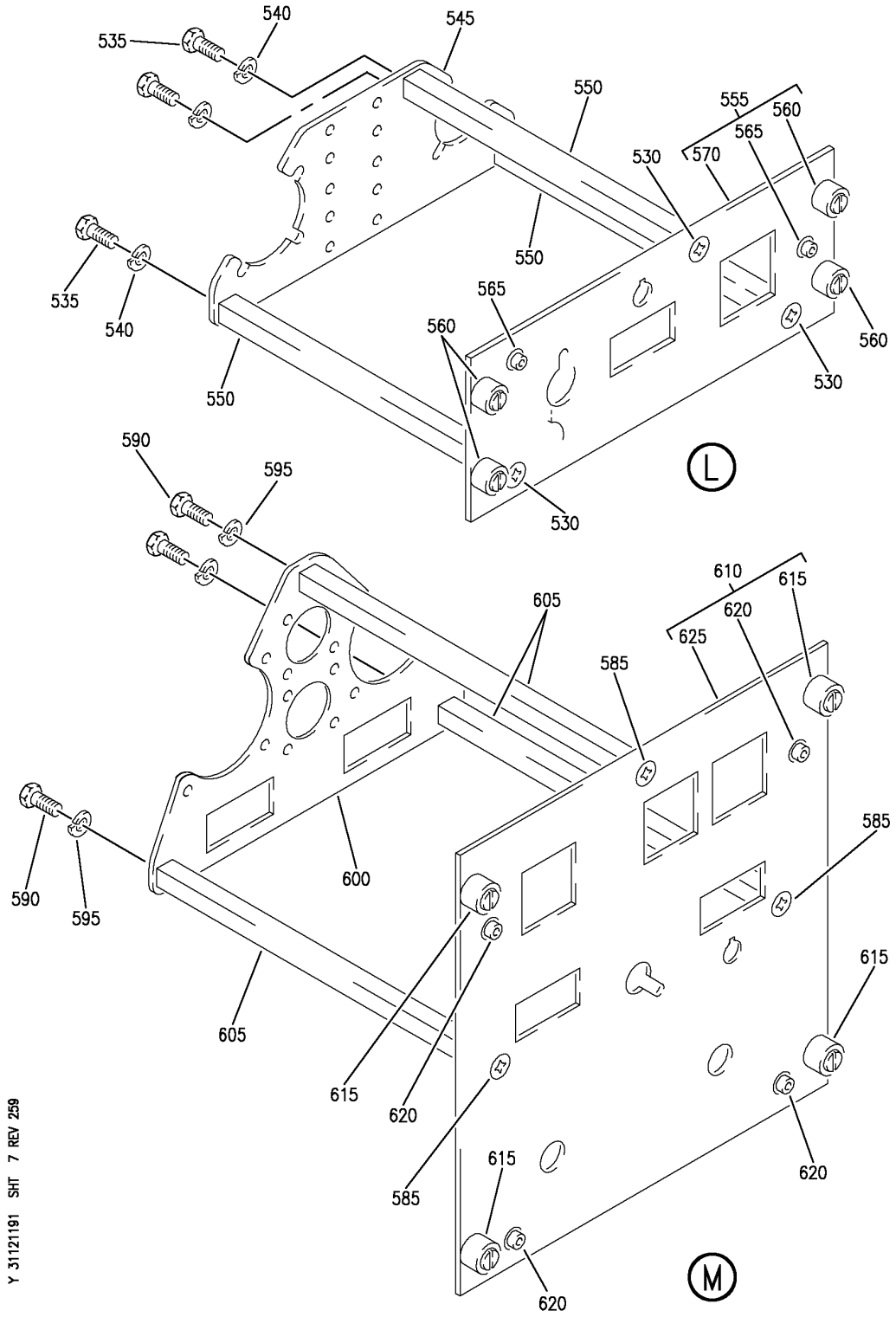

PANEL INSTL-P5 OVHD (INDICATING/RECORDING SYSTEMS ONLY)
FIGURE 91 (SHEET 7)

BOEING PROPRIETARY - Copyright © - Unpublished Work - See title page for details.

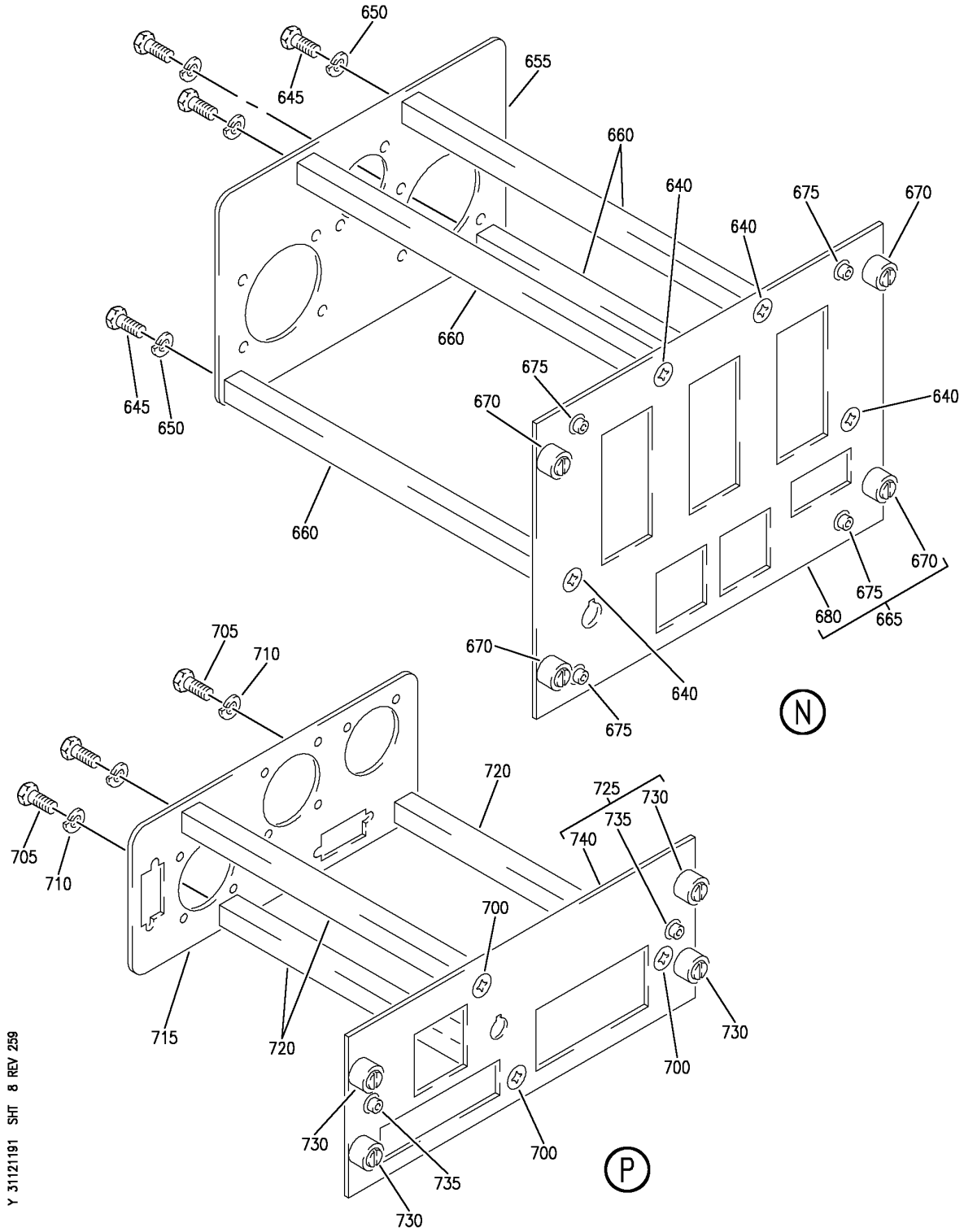

PANEL INSTL-P5 OVHD (INDICATING/RECORDING SYSTEMS ONLY)
FIGURE 91 (SHEET 8)

BOEING PROPRIETARY - Copyright © - Unpublished Work - See title page for details.

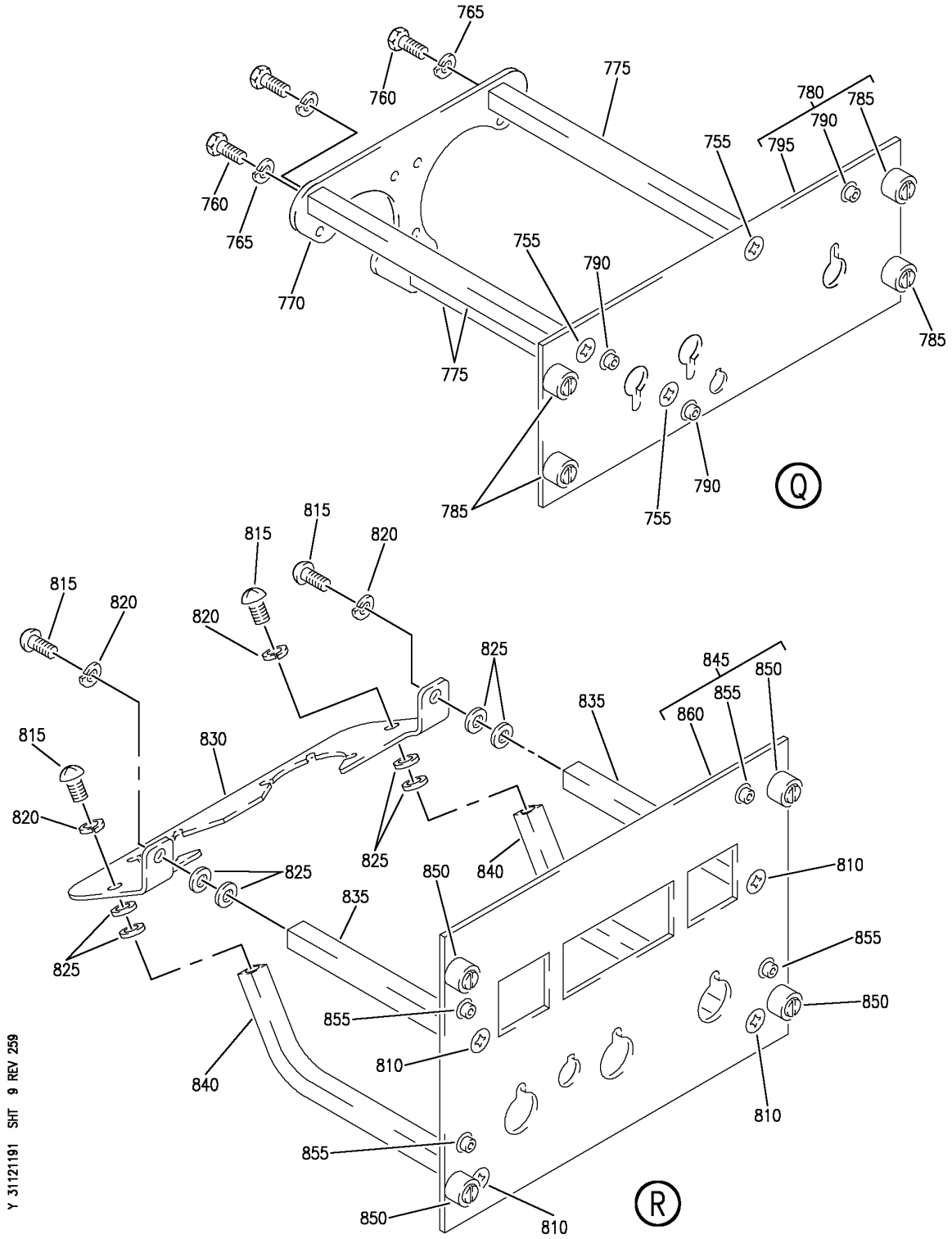

PANEL INSTL-P5 OVHD (INDICATING/RECORDING SYSTEMS ONLY)
FIGURE 91 (SHEET 9)

BOEING PROPRIETARY - Copyright © - Unpublished Work - See title page for details.

FIG ITEM	PART NUMBER	1 2 3 4 5 6 7 NOMENCLATURE	EFFECT FROM TO	UNITS PER ASSY
91				
		PANEL INSTL-P5 OVHD (INDICATING/RECORDING SYSTEMS ONLY)	103105	
- 1	MODREF33760	PANEL INSTL-P5 OVHD (INDICATING/RECORDING SYSTEMS ONLY)	103103	1
		MODULE NUMBER: 233N3103-351 REV C		
		FOR OTHER SYS DETAILS SEE:		
		11-31-10-12		
		21-25-55-03		
		21-31-01-02		
		21-33-51-03		
		21-51-54-03		
		21-58-19-10		
		21-58-51-03		
		21-61-04-03		
		21-65-51-01		
		22-21-01-04		
		22-24-51-02		
		23-24-01-01		
		23-32-00-11		
		23-42-02-02		
		23-71-05-02		
		24-11-52-05		
		24-22-01-03		
		24-31-01-10		
		24-31-03-09		
		24-33-04-01		
		24-41-51-04		
		24-51-62-01		
		26-18-51-04		
		27-21-53-02		
		27-41-55-01		
		27-61-51-03		
		27-62-52-02		
		28-22-51-02		
		28-41-04-01		
		28-41-51-03		
		29-11-02-03		
		29-11-05-04		
		29-11-52-07		
		29-21-54-03		
		29-31-00-01		
		29-32-51-03		
		29-33-52-03		
		30-11-51-03		
		30-21-51-03		
		30-31-51-02		

MISSING ITEM NUMBERS NOT APPLICABLE

- ITEM NOT ILLUSTRATED

BOEING PROPRIETARY - Copyright © - Unpublished Work - See title page for details.

FIG ITEM	PART NUMBER	1 2 3 4 5 6 7 NOMENCLATURE	EFFECT FROM TO	UNITS PER ASSY
91				
		30-32-51-01		
		30-33-51-02		
		30-41-51-03		
		30-42-51-03		
		32-42-52-03		
		33-11-03-03		
		33-11-51-17		
		33-13-01-65		
		33-13-02-03		
		33-16-51-03		
		33-24-51-02		
		33-41-52-04		
		33-42-01-04		
		33-42-02-04		
		33-42-52-04		
		33-43-51-04		
		33-44-51-05		
		33-45-53-03		
		33-51-08-05		
		34-21-02-01		
		35-21-51-04		
		36-11-04-01		
		36-21-00-01		
		36-21-02-05		
		36-22-51-03		
		49-41-00-02		
		49-52-00-01		
		49-70-00-01		
		52-51-51-03		
		52-71-51-02		
		73-21-52-02		
		74-31-51-05		
		75-32-00-01		
		80-11-09-02		
- 1	MODREF34038	PANEL INSTL-P5 OVHD (INDICATING/RECORDING SYSTEMS ONLY) MODULE NUMBER: 233N3103-351 REV D FOR OTHER SYS DETAILS SEE:	104105	1
		11-31-10-12		
		21-25-55-03		
		21-31-01-02		
		21-33-51-03		
		21-51-54-03		
		21-58-19-10		
		21-58-51-03		
		21-61-04-03		
		21-65-51-01		

MISSING ITEM NUMBERS NOT APPLICABLE

- ITEM NOT ILLUSTRATED

BOEING PROPRIETARY - Copyright © - Unpublished Work - See title page for details.

FIG ITEM	PART NUMBER	1 2 3 4 5 6 7 NOMENCLATURE	EFFECT FROM TO	UNITS PER ASSY
91				
		22-21-01-04		
		22-24-51-02		
		23-24-01-01		
		23-32-00-11		
		23-42-02-02		
		23-71-05-02		
		24-11-52-05		
		24-22-01-03		
		24-31-01-10		
		24-31-03-09		
		24-33-04-01		
		24-41-51-04		
		24-51-62-01		
		26-18-51-04		
		27-21-53-02		
		27-41-55-01		
		27-61-51-03		
		27-62-52-02		
		28-22-51-02		
		28-41-04-01		
		28-41-51-03		
		29-11-02-03		
		29-11-05-04		
		29-11-52-07		
		29-21-54-03		
		29-31-00-01		
		29-32-51-03		
		29-33-52-03		
		30-11-51-03		
		30-21-51-03		
		30-31-51-02		
		30-32-51-01		
		30-33-51-02		
		30-41-51-03		
		30-42-51-03		
		32-42-52-03		
		33-11-03-03		
		33-11-51-17		
		33-13-01-65		
		33-13-02-03		
		33-16-51-03		
		33-24-51-02		
		33-41-52-04		
		33-42-01-04		
		33-42-02-04		
		33-42-52-04		
		33-43-51-04		
		33-44-51-05		
		33-45-53-03		
		MISSING ITEM NUMBERS NOT APPLICABLE		

– ITEM NOT ILLUSTRATED

BOEING PROPRIETARY - Copyright © - Unpublished Work - See title page for details.

FIG ITEM	PART NUMBER	1 2 3 4 5 6 7 NOMENCLATURE	EFFECT FROM TO	UNITS PER ASSY
91				
		33-51-08-05		
		34-21-02-01		
		35-21-51-04		
		36-11-04-01		
		36-21-00-01		
		36-21-02-05		
		36-22-51-03		
		49-41-00-02		
		49-52-00-01		
		49-70-00-01		
		52-51-51-03		
		52-71-51-02		
		73-21-52-02		
		74-31-51-05		
		75-32-00-01		
		80-11-09-02		
10	BACP10U0262T	.PANEL	103105	1
15	CG1093AD03	.PANEL ASSY-IRS MODE SELECT	103105	RF
		SUPPLIER CODE:		
		V65507		
		FUNCTIONAL DESCRIPTION:		
		PROVIDES MODE CONTROL,		
		SYSTEM STATUS,		
		INITIALIZATION		
		CAPABILITIES AND DATA		
		DISPLAY FOR THREE		
		INERTIAL REFERENCE UNITS		
		SPECIFICATION NUMBER:		
		S242T101-206		
		ELECTRICAL EQUIP NUMBER:		
		M00059		
		COMPONENT MAINT MANUAL REF:		
		34-21-21		
		QUALIFIED I/W DATA:		
		S242T101-206/CG1093AD03		
		CAN REPLACE AND		
		BE REPLACED BY		
		S242T101-203/CG1093AD01		
		EXCEPT FOR NL001-NL999,		
		NU701-NU999 FOR 757, AND		
		VQ001-VQ999 FOR 767,		
		WHERE		
		S242T101-206/CG1093AD03		
		MUST BE USED.		
		FOR BREAKDOWN SEE:		
		34-21-02-01		

MISSING ITEM NUMBERS NOT APPLICABLE

– ITEM NOT ILLUSTRATED

BOEING PROPRIETARY - Copyright © - Unpublished Work - See title page for details.

FIG ITEM	PART NUMBER	1 2 3 4 5 6 7 NOMENCLATURE	EFFECT FROM TO	UNITS PER ASSY
91				
20	233N3216-309	.PANEL ASSY-YAW DAMPER SUPPLIER CODE: V89954 COMPONENT MAINT MANUAL REF: 22-21-71 FOR OTHER SYS DETAILS SEE: 22-21-01-04 33-13-01-65	103105	1
- 25	233N3216-35	..PANEL ASSY- SUPPLIER CODE: V89954 MISCELLANEOUS DATA: FOR SPARES PROCURE NEXT HIGHER ASSY ELECTRICAL EQUIP NUMBER: M10250 COMPONENT MAINT MANUAL REF: 22-21-71	103105	RF
30	FH6C5CPL12BN	...SCREW- SUPPLIER CODE: V12324	103105	3
35	BACS12CK06U5	...SCREW	103105	3
40	BACW10EC06C	...WASHER	103105	3
45	233N3250-15	...BRACKET-CONN.	103105	1
50	69B46200-12	...STANDOFF	103105	3
55	233N3216-2	...BASEPLATE ASSY- SUPPLIER CODE: V89954	103105	1
60	PFSC35-38ASEMB	....STUD ASSY SUPPLIER CODE: V72794 SPECIFICATION NUMBER: BACS21DX1B	103105	4
65	SF6G6CBB5D	....NUT SUPPLIER CODE: V12324 SPECIFICATION NUMBER: BACN10PA06-6	103105	2
70	233N3216-3	....BASEPLATE- SUPPLIER CODE: V89954	103105	1

MISSING ITEM NUMBERS NOT APPLICABLE

- ITEM NOT ILLUSTRATED

BOEING PROPRIETARY - Copyright © - Unpublished Work - See title page for details.

FIG ITEM	PART NUMBER	1 2 3 4 5 6 7 NOMENCLATURE	EFFECT FROM TO	UNITS PER ASSY
91				
75	233T3242-301	.PANEL ASSY-EEC CONT SUPPLIER CODE: V89954 COMPONENT MAINT MANUAL REF: 73-21-86 QUALIFIED I/W DATA: 233T3242-301 PANEL ASSY IS I/W 233T3242-6 PANEL ASSY T/W S233T100-1092 LIGHTPLATE FOR OTHER SYS DETAILS SEE: 33-13-01-65 73-21-52-02	103105	1
75	233T3242-1301	.PANEL ASSY-EEC CONT SUPPLIER CODE: V89954 COMPONENT MAINT MANUAL REF: 73-21-86 FOR OTHER SYS DETAILS SEE: 73-21-52-02	103105	1
- 80	233T3242-6	..PANEL ASSY- SUPPLIER CODE: V89954 ELECTRICAL EQUIP NUMBER: M10761 COMPONENT MAINT MANUAL REF: 73-21-86 QUALIFIED I/W DATA: 233T3242-301 PANEL ASSY IS I/W 233T3242-6 PANEL ASSY T/W S233T100-1092 LIGHTPLATE	103105	RF
85	NAS514P632-5P	...SCREW	103105	3
90	BACS12CK06U5	...SCREW	103105	3
95	BACW10EC06C	...WASHER	103105	3
100	233T6200-142	...BRACKET-SPRT	103105	1
105	69B46200-12	...STANDOFF	103105	3
110	233T3242-2	...BASEPLATE ASSY- SUPPLIER CODE: V89954	103105	1
115	PFSC35-38ASEMB	....STUD ASSY SUPPLIER CODE: V72794 SPECIFICATION NUMBER: BACS21DX1B	103105	4
120	SF6G6CBB5D	....NUT- SUPPLIER CODE: V12324	103105	2
125	BACP10U0187N	....BASEPLATE	103105	1

MISSING ITEM NUMBERS NOT APPLICABLE

- ITEM NOT ILLUSTRATED

BOEING PROPRIETARY - Copyright © - Unpublished Work - See title page for details.

FIG ITEM	PART NUMBER	1 2 3 4 5 6 7 NOMENCLATURE	EFFECT FROM TO	UNITS PER ASSY
91				
130	233N3205-302	.PANEL ASSY-HYDR	103105	1
		SUPPLIER CODE:		
		V89954		
		COMPONENT MAINT MANUAL REF:		
		29-00-71		
		QUALIFIED I/W DATA:		
		233N3205-302 PANEL ASSY		
		IS I/W 233N3205-27 PANEL		
		ASSY T/W S233T100-6060		
		LIGHTPLATE		
		FOR OTHER SYS DETAILS SEE:		
		29-11-02-03		
		29-11-05-04		
		29-11-52-07		
		29-31-00-01		
		29-32-51-03		
		29-33-52-03		
		33-13-01-65		
- 135	233N3205-27	..PANEL ASSY-	103105	RF
		SUPPLIER CODE:		
		V89954		
		ELECTRICAL EQUIP NUMBER:		
		M10050		
		COMPONENT MAINT MANUAL REF:		
		29-00-71		
		QUALIFIED I/W DATA:		
		233N3205-302 PANEL ASSY		
		IS I/W 233N3205-27 PANEL		
		ASSY T/W S233T100-6060		
		LIGHTPLATE		
140	NAS514P632-5	...SCREW	103105	4
145	BACS12HN06-5	...SCREW-	103105	4
		OPTIONAL PART:		
		NAS1801-06-5		
145	NAS1801-06-5	...SCREW-	103105	4
		OPTIONAL PART:		
		BACS12HN06-5		
150	BACW10EC06S	...WASHER-	103105	4
		OPTIONAL PART:		
		MS35338-41		
150	MS35338-41	...WASHER-	103105	4
		OPTIONAL PART:		
		BACW10EC06S		
155	233N3250-8	...BRACKET-SPRT	103105	1
160	69B46200-11	...STANDOFF	103105	4
165	233N3205-30	...BASEPLATE ASSY-	103105	1
		SUPPLIER CODE:		
		V89954		

MISSING ITEM NUMBERS NOT APPLICABLE

- ITEM NOT ILLUSTRATED

BOEING PROPRIETARY - Copyright © - Unpublished Work - See title page for details.

FIG ITEM	PART NUMBER	1 2 3 4 5 6 7 NOMENCLATURE	EFFECT FROM TO	UNITS PER ASSY
91				
170	SF6G6CBB5D	....NUT	103105	3
		SUPPLIER CODE:		
		V12324		
		SPECIFICATION NUMBER:		
		BACN10PA06-6		
175	BACP10U0600T	....PANEL ASSY	103105	1
180	233T3200-2	.PANEL ASSY	103105	1
185	BACS21DD1B	..STUD ASSY	103105	3
		SUPPLIER CODE:		
		V08524		
		SPECIFICATION NUMBER:		
		BACS21DD1B		
190	233T3200-4	..BASEPLATE	103105	1
195	233N3202-17	.PANEL ASSY-ANN. LIGHTS	103105	1
		SUPPLIER CODE:		
		V89954		
		ELECTRICAL EQUIP NUMBER:		
		M10394		
		COMPONENT MAINT MANUAL REF:		
		33-16-71		
		FOR OTHER SYS DETAILS SEE:		
		22-24-51-02		
		27-21-53-02		
		27-41-55-01		
		27-61-51-03		
		27-62-52-02		
		30-31-51-02		
		30-32-51-01		
		30-33-51-02		
		32-42-52-03		
		52-71-51-02		
200	NAS514P632-5	..SCREW	103105	3
205	BACS12CB06-5	..SCREW	103105	3
210	MS35338-41	..WASHER	103105	3
215	233N3250-7	..BRACKET-CONN.	103105	1
220	69B46200-10	..STANDOFF	103105	3
225	233N3202-2	..BASEPLATE ASSY-	103105	1
		SUPPLIER CODE:		
		V89954		
230	BACS21DD1B	...STUD ASSY	103105	4
		SUPPLIER CODE:		
		V08524		
		SPECIFICATION NUMBER:		
		BACS21DD1B		

MISSING ITEM NUMBERS NOT APPLICABLE

– ITEM NOT ILLUSTRATED

BOEING PROPRIETARY - Copyright © - Unpublished Work - See title page for details.

FIG ITEM	PART NUMBER	1 2 3 4 5 6 7 NOMENCLATURE	EFFECT FROM TO	UNITS PER ASSY
91				
235	233T3254-300	.MODULE ASSY-EMER LOCATOR XMTR SUPPLIER CODE: V89954 ELECTRICAL EQUIP NUMBER: M11360 COMPONENT MAINT MANUAL REF: 23-24-02 FOR OTHER SYS DETAILS SEE: 23-24-01-01 33-13-01-65	103105	1
- 240	233T3254-1	..MODULE ASSY- SUPPLIER CODE: V89954 COMPONENT MAINT MANUAL REF: 23-24-02	103105	RF
245	FH6C5CPL12BN	...SCREW- SUPPLIER CODE: V12324	103105	3
250	MS51957-27	...SCREW	103105	3
255	MS35338-136	...WASHER	103105	3
260	69B46200-6	...STANDOFF	103105	3
265	233T6200-102	...BRACKET-SPRT	103105	1
270	233T3254-2	...BASEPLATE ASSY- SUPPLIER CODE: V89954	103105	1
275	PFSC35-38ASEMB	....STUD ASSY SUPPLIER CODE: V72794 SPECIFICATION NUMBER: BACS21DX1B	103105	4
280	SF6G6CBB5D	....NUT- SUPPLIER CODE: V12324	103105	3
285	BACP10U0187N	....BASEPLATE	103105	1
290	BACP10U0450T	.PANEL ASSY	103105	1
295	233N3211-319	.PANEL ASSY-BATTERY/STBY PWR SUPPLIER CODE: V89954 COMPONENT MAINT MANUAL REF: 24-33-72 FOR OTHER SYS DETAILS SEE: 24-31-01-10 24-31-03-09 24-33-04-01 33-13-01-65	103105	1

MISSING ITEM NUMBERS NOT APPLICABLE

- ITEM NOT ILLUSTRATED

BOEING PROPRIETARY - Copyright © - Unpublished Work - See title page for details.

FIG ITEM	PART NUMBER	1 2 3 4 5 6 7 NOMENCLATURE	EFFECT FROM TO	UNITS PER ASSY
91				
- 300	233N3211-68	..PANEL ASSY- SUPPLIER CODE: V89954 ELECTRICAL EQUIP NUMBER: M10062 COMPONENT MAINT MANUAL REF: 24-33-72	103105	RF
305	NAS514P632-5	...SCREW	103105	3
310	BACS12CK06U5	...SCREW	103105	3
315	BACW10EC06C	...WASHER	103105	3
320	233N3250-5	...BRACKET-CONN.	103105	1
325	69B46200-17	...STANDOFF	103105	3
330	233N3211-49	...BASEPLATE ASSY- SUPPLIER CODE: V89954	103105	1
335	PFSC35-38ASEMB	....STUD ASSY SUPPLIER CODE: V72794 SPECIFICATION NUMBER: BACS21DX1B	103105	4
340	SF6G6CBB5D	....NUT- SUPPLIER CODE: V12324	103105	2
345	BACP10U0225NC	....PANEL ASSY	103105	1
350	233N3209-314	.PANEL ASSY-E/E SUPPLIER CODE: V89954 COMPONENT MAINT MANUAL REF: 24-22-71 FOR OTHER SYS DETAILS SEE: 24-11-52-05 24-22-01-03 24-41-51-04 24-51-62-01 33-13-01-65	103105	1
- 355	233N3209-50	..PANEL ASSY- SUPPLIER CODE: V89954 ELECTRICAL EQUIP NUMBER: M10063 COMPONENT MAINT MANUAL REF: 24-22-71	103105	RF
360	FH6C5TPKL12BN	...SCREW- SUPPLIER CODE: V12324	103105	4
365	BACS12HN06-5	...SCREW	103105	4
370	BACW10EC06S	...WASHER	103105	4

MISSING ITEM NUMBERS NOT APPLICABLE

- ITEM NOT ILLUSTRATED

BOEING PROPRIETARY - Copyright © - Unpublished Work - See title page for details.

FIG ITEM	PART NUMBER	1 2 3 4 5 6 7 NOMENCLATURE	EFFECT FROM TO	UNITS PER ASSY
91				
375	233N3209-6	...BRACKET ASSY- SUPPLIER CODE: V89954	103105	RF
380	69B46200-12	...STANDOFF	103105	4
385	233N3209-2	...BASEPLATE ASSY- SUPPLIER CODE: V89954	103105	1
390	PFSC35-38ASEMB	....STUD ASSY SUPPLIER CODE: V72794 SPECIFICATION NUMBER: BACS21DX1B	103105	4
395	SF6G6CBB5D	....NUT SUPPLIER CODE: V12324 SPECIFICATION NUMBER: BACN10PA06-6	103105	4
400	233N3209-3	....BASEPLATE- SUPPLIER CODE: V89954	103105	1
405	233T3232-302	.PANEL ASSY-APU START SUPPLIER CODE: V89954 COMPONENT MAINT MANUAL REF: 49-61-52 FOR OTHER SYS DETAILS SEE: 33-13-01-65 49-41-00-02 49-70-00-01	103105	1
405	233T3232-305	.PANEL ASSY-APU START SUPPLIER CODE: V89954 COMPONENT MAINT MANUAL REF: 49-61-52 FOR OTHER SYS DETAILS SEE: 33-13-01-65 49-41-00-02 49-70-00-01	103105	1
- 410	233T3232-15	..PANEL ASSY- SUPPLIER CODE: V89954 ELECTRICAL EQUIP NUMBER: M00001 COMPONENT MAINT MANUAL REF: 49-61-52 USED ON: 233T3232-302	103105	RF

MISSING ITEM NUMBERS NOT APPLICABLE

- ITEM NOT ILLUSTRATED

BOEING PROPRIETARY - Copyright © - Unpublished Work - See title page for details.

FIG ITEM	PART NUMBER	1 2 3 4 5 6 7 NOMENCLATURE	EFFECT FROM TO	UNITS PER ASSY
91				
- 410	233T3232-23	..PANEL ASSY-	103105	RF
		SUPPLIER CODE:		
		V89954		
		COMPONENT MAINT MANUAL REF:		
		49-61-52		
		USED ON:		
		233T3232-305		
415	FH6C5CPL12BN	...SCREW-	103105	3
		SUPPLIER CODE:		
		V12324		
420	NAS1801-06-5	...SCREW-	103105	3
		USED ON:		
		233T3232-15		
420	BACS12HN06-5	...SCREW-	103105	3
		USED ON:		
		233T3232-23		
425	BACW10EC06S	...WASHER-	103105	3
		USED ON:		
		233T3232-15		
425	BACW10EC06CD	...WASHER-	103105	3
		USED ON:		
		233T3232-23		
430	233T6200-95	...BRACKET-SPRT	103105	1
435	69B46200-11	...STANDOFF	103105	3
440	233T3232-2	...BASEPLATE ASSY-	103105	1
		SUPPLIER CODE:		
		V89954		
445	BACS21DD1B	....STUD ASSY	103105	4
		SUPPLIER CODE:		
		V08524		
		SPECIFICATION NUMBER:		
		BACS21DD1B		
450	SF6G6CBB5D	....NUT	103105	2
		SUPPLIER CODE:		
		V12324		
		SPECIFICATION NUMBER:		
		BACN10PA06-6		
455	BACP10U0187N	....BASEPLATE	103105	1

MISSING ITEM NUMBERS NOT APPLICABLE

- ITEM NOT ILLUSTRATED

BOEING PROPRIETARY - Copyright © - Unpublished Work - See title page for details.

FIG ITEM	PART NUMBER	1 2 3 4 5 6 7 NOMENCLATURE	EFFECT FROM TO	UNITS PER ASSY
91				
460	233N3214-305	.PANEL ASSY-LIGHTING CONT SUPPLIER CODE: V89954 POSITION DATA: L COMPONENT MAINT MANUAL REF: 33-11-71 FOR OTHER SYS DETAILS SEE: 33-11-03-03 33-11-51-17 33-13-01-65 33-42-01-04 33-42-02-04	103105	1
- 465	233N3214-34	..PANEL ASSY- SUPPLIER CODE: V89954 ELECTRICAL EQUIP NUMBER: M10056 COMPONENT MAINT MANUAL REF: 33-11-71	103105	RF
470	NAS514P632-5	...SCREW	103105	3
475	BACS12CB06-5	...SCREW	103105	3
480	MS35338-41	...WASHER	103105	3
485	233N3250-34	...BRACKET-CONN.	103105	1
490	69B46200-14	...STANDOFF	103105	3
495	233N3214-19	...BASEPLATE ASSY- SUPPLIER CODE: V89954	103105	1
500	PFSC35-38ASEMB	....STUD ASSY SUPPLIER CODE: V72794 SPECIFICATION NUMBER: BACS21DX1B	103105	3
505	SF6G6CBB5D	....NUT SUPPLIER CODE: V12324 SPECIFICATION NUMBER: BACN10PA06-6	103105	3
510	233N3214-20	....BASEPLATE- SUPPLIER CODE: V89954	103105	1
515	BACP10U0337T	.PANEL ASSY	103105	1

MISSING ITEM NUMBERS NOT APPLICABLE

- ITEM NOT ILLUSTRATED

BOEING PROPRIETARY - Copyright © - Unpublished Work - See title page for details.

FIG ITEM	PART NUMBER	1 2 3 4 5 6 7 NOMENCLATURE	EFFECT FROM TO	UNITS PER ASSY
91				
520	233T3210-306	.PANEL ASSY-EMER LIGHTS PASS. OXY SUPPLIER CODE: V89954 COMPONENT MAINT MANUAL REF: 33-51-03 FOR OTHER SYS DETAILS SEE: 33-13-01-65 33-51-08-05 35-21-51-04	103105	1
- 525	233T3210-42	..PANEL ASSY- SUPPLIER CODE: V89954 ELECTRICAL EQUIP NUMBER: M00043 COMPONENT MAINT MANUAL REF: 33-51-03	103105	RF
530	FH6C5CPL12BN	...SCREW- SUPPLIER CODE: V12324	103105	3
535	BACS12CK06U5	...SCREW	103105	3
540	BACW10EC06C	...WASHER	103105	3
545	233T6200-82	...BRACKET-SPRT	103105	1
550	69B46200-10	...STANDOFF	103105	3
555	233T3210-17	...BASEPLATE ASSY- SUPPLIER CODE: V89954	103105	1
560	BACS21DD1B	....STUD ASSY SUPPLIER CODE: V08524 SPECIFICATION NUMBER: BACS21DD1B	103105	4
565	SF6G6CBB5D	....NUT SUPPLIER CODE: V12324 SPECIFICATION NUMBER: BACN10PA06-6	103105	2
570	BACP10U0225N	....PANEL	103105	1
575	233N3223-343	.PANEL ASSY-ENG START/RAT SUPPLIER CODE: V89954 FOR OTHER SYS DETAILS SEE: 29-21-54-03 33-13-01-65 73-21-52-02 74-31-51-05 80-11-09-02	103105	1

MISSING ITEM NUMBERS NOT APPLICABLE

- ITEM NOT ILLUSTRATED

BOEING PROPRIETARY - Copyright © - Unpublished Work - See title page for details.

FIG ITEM	PART NUMBER	1 2 3 4 5 6 7 NOMENCLATURE	EFFECT FROM TO	UNITS PER ASSY
91				
- 580	233N3223-53	..PANEL ASSY-	103105	RF
		SUPPLIER CODE:		
		V89954		
		MISCELLANEOUS DATA:		
		FOR SPARES PROCURE NEXT		
		HIGHER ASSY		
		ELECTRICAL EQUIP NUMBER:		
		M10468		
		COMPONENT MAINT MANUAL REF:		
		31-12-01		
585	NAS514P632-5	...SCREW	103105	3
590	BACS12HN06-5	...SCREW-	103105	3
		OPTIONAL PART:		
		NAS1801-06-5		
590	NAS1801-06-5	...SCREW-	103105	3
		OPTIONAL PART:		
		BACS12HN06-5		
595	BACW10EC06CD	...WASHER	103105	3
600	233N3223-35	...BRACKET ASSY-	103105	RF
		SUPPLIER CODE:		
		V89954		
605	69B46200-13	...STANDOFF	103105	3
610	233N3223-8	...BASEPLATE ASSY-	103105	1
		SUPPLIER CODE:		
		V89954		
615	PFSC35-38ASEMB	....STUD ASSY	103105	4
		SUPPLIER CODE:		
		V72794		
		SPECIFICATION NUMBER:		
		BACS21DX1B		
620	SF6G6CBB5D	....NUT	103105	4
		SUPPLIER CODE:		
		V12324		
		SPECIFICATION NUMBER:		
		BACN10PA06-6		
625	233N3223-9	....BASEPLATE-	103105	1
		SUPPLIER CODE:		
		V89954		

MISSING ITEM NUMBERS NOT APPLICABLE

- ITEM NOT ILLUSTRATED

BOEING PROPRIETARY - Copyright © - Unpublished Work - See title page for details.

FIG ITEM	PART NUMBER	1 2 3 4 5 6 7 NOMENCLATURE	EFFECT FROM TO	UNITS PER ASSY
91				
630	233N3206-300	.PANEL ASSY-FUEL CONT SUPPLIER CODE: V89954 COMPONENT MAINT MANUAL REF: 28-41-71 QUALIFIED I/W DATA: THE 233N3206-300 PANEL ASSY IS I/W THE 233N3206-19 PANEL ASSY T/W THE S233T100-1106 LIGHTPLATE PRE ALERT SB: 28A0105R1 PRE COMPONENT SB: 233N3206-28-03 FOR OTHER SYS DETAILS SEE: 28-22-51-02 28-41-51-03 33-13-01-65	103105	1
630	233N3206-3300	.PANEL ASSY-FUEL CONT SUPPLIER CODE: V89954 COMPONENT MAINT MANUAL REF: 28-41-71 POST ALERT SB: 28A0105R1 POST COMPONENT SB: 233N3206-28-03 FOR OTHER SYS DETAILS SEE: 28-22-51-02 28-41-51-03 33-13-01-65	103105	1
- 635	233N3206-19	..PANEL ASSY- SUPPLIER CODE: V89954 ELECTRICAL EQUIP NUMBER: M10055 COMPONENT MAINT MANUAL REF: 28-41-71 QUALIFIED I/W DATA: THE 233N3206-300 PANEL ASSY IS I/W THE 233N3206-19 PANEL ASSY T/W THE S233T100-1106 LIGHTPLATE PRE ALERT SB: 28A0105R1 PRE COMPONENT SB: 233N3206-28-03	103105	RF

MISSING ITEM NUMBERS NOT APPLICABLE

- ITEM NOT ILLUSTRATED

BOEING PROPRIETARY - Copyright © - Unpublished Work - See title page for details.

FIG ITEM	PART NUMBER	1 2 3 4 5 6 7 NOMENCLATURE	EFFECT FROM TO	UNITS PER ASSY
91				
- 635	233N3206-3019	..PANEL ASSY-	103105	RF
		SUPPLIER CODE:		
		V89954		
		ELECTRICAL EQUIP NUMBER:		
		M10055		
		COMPONENT MAINT MANUAL REF:		
		28-41-71		
		POST ALERT SB:		
		28A0105R1		
		POST COMPONENT SB:		
		233N3206-28-03		
640	NAS514P632-5	...SCREW	103105	4
645	BACS12HN06-5	...SCREW	103105	4
650	BACW10EC06S	...WASHER	103105	4
655	233N3250-64	...BRACKET	103105	1
660	69B46200-11	...STANDOFF	103105	4
665	233T3235-18	...BASEPLATE ASSY-	103105	1
		SUPPLIER CODE:		
		V89954		
670	PFSC35-38ASEMB	....STUD ASSY	103105	4
		SUPPLIER CODE:		
		V72794		
		SPECIFICATION NUMBER:		
		BACS21DX1B		
675	SF6G6CBB5D	....NUT-PRESS	103105	4
		SUPPLIER CODE:		
		V12324		
680	BACP10U0412N	....BASEPLATE	103105	1
685	10080-0201	.INDICATOR ASSY-FUEL QTY	103105	RF
		SUPPLIER CODE:		
		V89305		
		FUNCTIONAL DESCRIPTION:		
		MODULE DISPLAYS		
		INDIVIDUAL TANK		
		QUANTITY, TOTAL QUANTITY		
		& TEMPERATURE OF MAIN		
		TANK		
		SPECIFICATION NUMBER:		
		S345N001-001		
		ELECTRICAL EQUIP NUMBER:		
		M10054		
		COMPONENT MAINT MANUAL REF:		
		28-42-08		
		OPTIONAL PART:		
		10080-0101		
		V89305		
		FOR BREAKDOWN SEE:		
		28-41-04-01		

MISSING ITEM NUMBERS NOT APPLICABLE

– ITEM NOT ILLUSTRATED

BOEING PROPRIETARY - Copyright © - Unpublished Work - See title page for details.

FIG ITEM	PART NUMBER	1 2 3 4 5 6 7 NOMENCLATURE	EFFECT FROM TO	UNITS PER ASSY
91				
685	10080-0101	.INDICATOR ASSY-FUEL QTY	103105	RF
		SUPPLIER CODE:		
		V89305		
		SPECIFICATION NUMBER:		
		S345N001-001		
		ELECTRICAL EQUIP NUMBER:		
		M10054		
		COMPONENT MAINT MANUAL REF:		
		28-42-08		
		OPTIONAL PART:		
		10080-0201		
		V89305		
		FOR BREAKDOWN SEE:		
		28-41-04-01		
690	233N3204-332	.PANEL ASSY-ANTI-ICE	103105	1
		SUPPLIER CODE:		
		V89954		
		COMPONENT MAINT MANUAL REF:		
		30-11-72		
		FOR OTHER SYS DETAILS SEE:		
		30-11-51-03		
		30-21-51-03		
		33-13-01-65		
- 695	233N3204-36	..PANEL ASSY-	103105	RF
		SUPPLIER CODE:		
		V89954		
		ELECTRICAL EQUIP NUMBER:		
		M10397		
		COMPONENT MAINT MANUAL REF:		
		30-11-72		
700	NAS514P632-5	...SCREW	103105	3
705	BACS12HN06-5	...SCREW	103105	3
710	BACW10EC06S	...WASHER	103105	3
715	233N3250-56	...BRACKET-SPRT	103105	1
720	69B46200-11	...STANDOFF	103105	3
725	233N3204-7	...BASEPLATE ASSY-	103105	1
		SUPPLIER CODE:		
		V89954		
730	PFSC35-38ASEMB	....STUD ASSY	103105	4
		SUPPLIER CODE:		
		V72794		
		SPECIFICATION NUMBER:		
		BACS21DX1B		
735	SF6G6CBB5D	....NUT	103105	2
		SUPPLIER CODE:		
		V12324		
		SPECIFICATION NUMBER:		
		BACN10PA06-6		

MISSING ITEM NUMBERS NOT APPLICABLE

- ITEM NOT ILLUSTRATED

BOEING PROPRIETARY - Copyright © - Unpublished Work - See title page for details.

FIG ITEM	PART NUMBER	1 2 3 4 5 6 7 NOMENCLATURE	EFFECT FROM TO	UNITS PER ASSY
91				
740	233N3204-8	....BASEPLATE- SUPPLIER CODE: V89954	103105	1
745	233N3201-303	.PANEL ASSY-WSHLD CLEARANCE SUPPLIER CODE: V89954 COMPONENT MAINT MANUAL REF: 30-42-01 FOR OTHER SYS DETAILS SEE: 30-42-51-03 33-13-01-65	103105	1
- 750	233N3201-16	..PANEL ASSY- SUPPLIER CODE: V89954 ELECTRICAL EQUIP NUMBER: M10023 COMPONENT MAINT MANUAL REF: 30-42-01	103105	RF
755	NAS514P632-5	...SCREW	103105	3
760	BACS12CB06-5	...SCREW	103105	3
765	MS35338-41	...WASHER	103105	3
770	233N3250-6	...BRACKET-CONN.	103105	1
775	69B46200-5	...STANDOFF	103105	3
780	233N3201-8	...BASEPLATE ASSY- SUPPLIER CODE: V89954	103105	1
785	BACS21DD1B	....STUD ASSY SUPPLIER CODE: V08524 SPECIFICATION NUMBER: BACS21DD1B	103105	4
790	SF6G6CBB5D	....NUT SUPPLIER CODE: V12324 SPECIFICATION NUMBER: BACN10PA06-6	103105	3
795	BACP10U0262N	....BASEPLATE	103105	1

MISSING ITEM NUMBERS NOT APPLICABLE

- ITEM NOT ILLUSTRATED

BOEING PROPRIETARY - Copyright © - Unpublished Work - See title page for details.

FIG ITEM	PART NUMBER	1 2 3 4 5 6 7 NOMENCLATURE	EFFECT FROM TO	UNITS PER ASSY
91				
800	233T3217-300	.PANEL ASSY-ANTI-COLLISION SUPPLIER CODE: V89954 COMPONENT MAINT MANUAL REF: 33-44-72 QUALIFIED I/W DATA: THE 233T3217-300 PANEL ASSY IS I/W THE 233T3217-41 PANEL ASSY T/W THE S233T100-6030 LIGHTPLATE. FOR OTHER SYS DETAILS SEE: 33-13-01-65 33-41-52-04 33-42-52-04 33-43-51-04 33-44-51-05	103105	1
- 805	233T3217-41	..PANEL ASSY- SUPPLIER CODE: V89954 ELECTRICAL EQUIP NUMBER: M00056 COMPONENT MAINT MANUAL REF: 33-44-72 QUALIFIED I/W DATA: THE 233T3217-300 PANEL ASSY IS I/W THE 233T3217-41 PANEL ASSY T/W THE S233T100-6030 LIGHTPLATE.	103105	RF
810	NAS514P632-5	...SCREW	103105	4
815	BACS12HN06-6	...SCREW- OPTIONAL PART: NAS1801-06-6	103105	4
815	NAS1801-06-6	...SCREW- OPTIONAL PART: BACS12HN06-6	103105	4
820	BACW10EC06CD	...WASHER- OPTIONAL PART: BACW10EC06S	103105	4
820	BACW10EC06S	...WASHER- OPTIONAL PART: BACW10EC06CD	103105	4
825	NAS620-6	...WASHER	103105	8
830	233T6200-70	...BRACKET-SPRT	103105	1
835	69B46200-5	...STANDOFF	103105	2
840	233T6200-66	...STANDOFF	103105	2

MISSING ITEM NUMBERS NOT APPLICABLE

- ITEM NOT ILLUSTRATED

BOEING PROPRIETARY - Copyright © - Unpublished Work - See title page for details.

FIG ITEM	PART NUMBER	1 2 3 4 5 6 7 NOMENCLATURE	EFFECT FROM TO	UNITS PER ASSY
91				
845	233N3210-7	...BASEPLATE ASSY- SUPPLIER CODE: V89954	103105	1
850	BACS21DD1B	....STUD ASSY SUPPLIER CODE: V08524 SPECIFICATION NUMBER: BACS21DD1B	103105	4
855	SF6G6CBB5D	....NUT SUPPLIER CODE: V12324 SPECIFICATION NUMBER: BACN10PA06-6	103105	4
860	233N3210-8	....BASEPLATE- SUPPLIER CODE: V89954	103105	1

MISSING ITEM NUMBERS NOT APPLICABLE

– ITEM NOT ILLUSTRATED

BOEING PROPRIETARY - Copyright © - Unpublished Work - See title page for details.

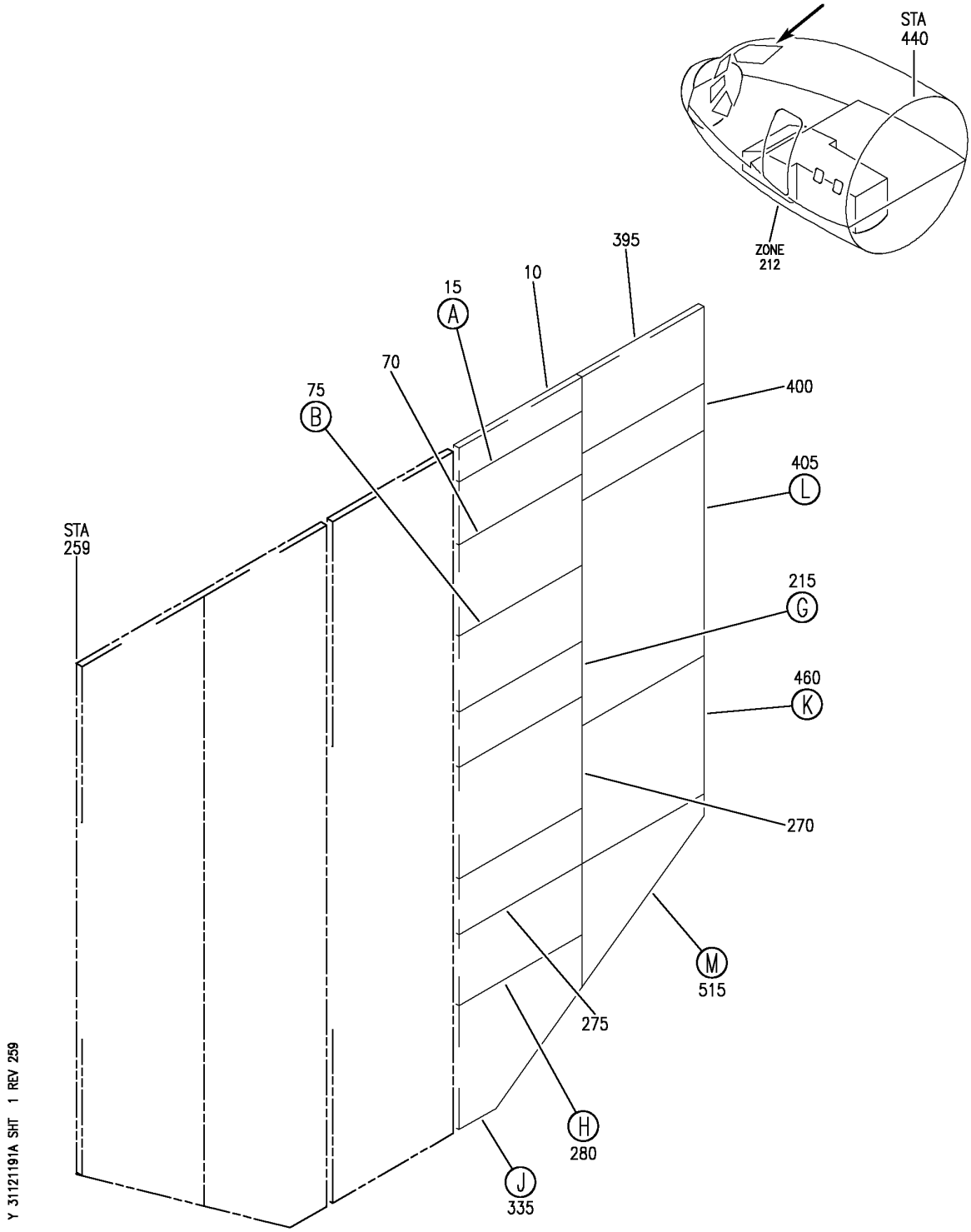

PANEL INSTL-P5 OVHD (INDICATING/RECORDING SYSTEMS ONLY)
FIGURE 91A (SHEET 1)

BOEING PROPRIETARY - Copyright © - Unpublished Work - See title page for details.

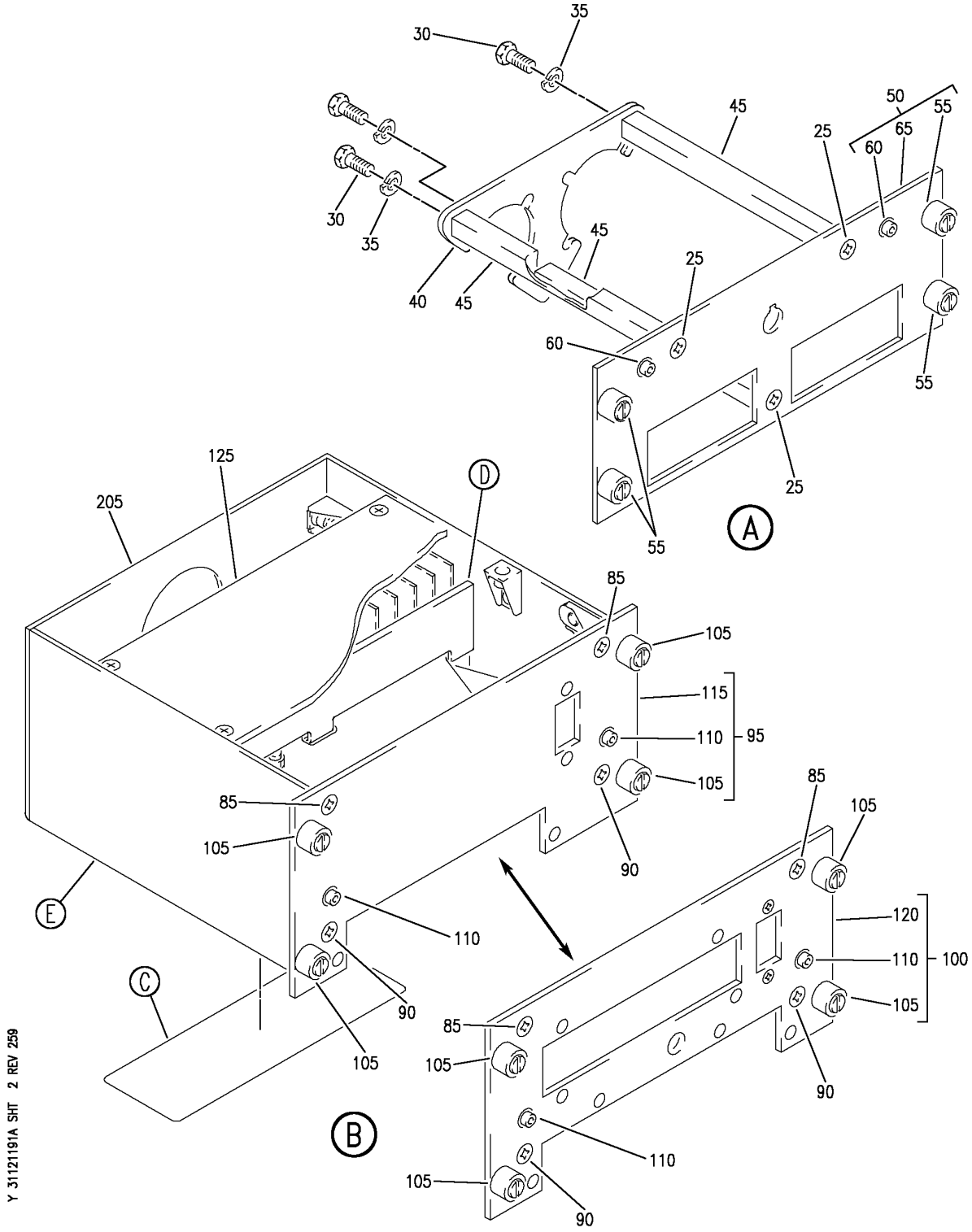

PANEL INSTL-P5 OVHD (INDICATING/RECORDING SYSTEMS ONLY)
FIGURE 91A (SHEET 2)

BOEING PROPRIETARY - Copyright © - Unpublished Work - See title page for details.

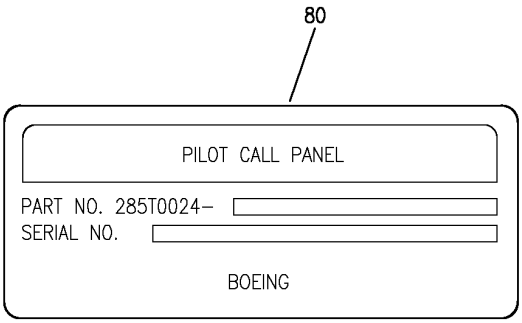

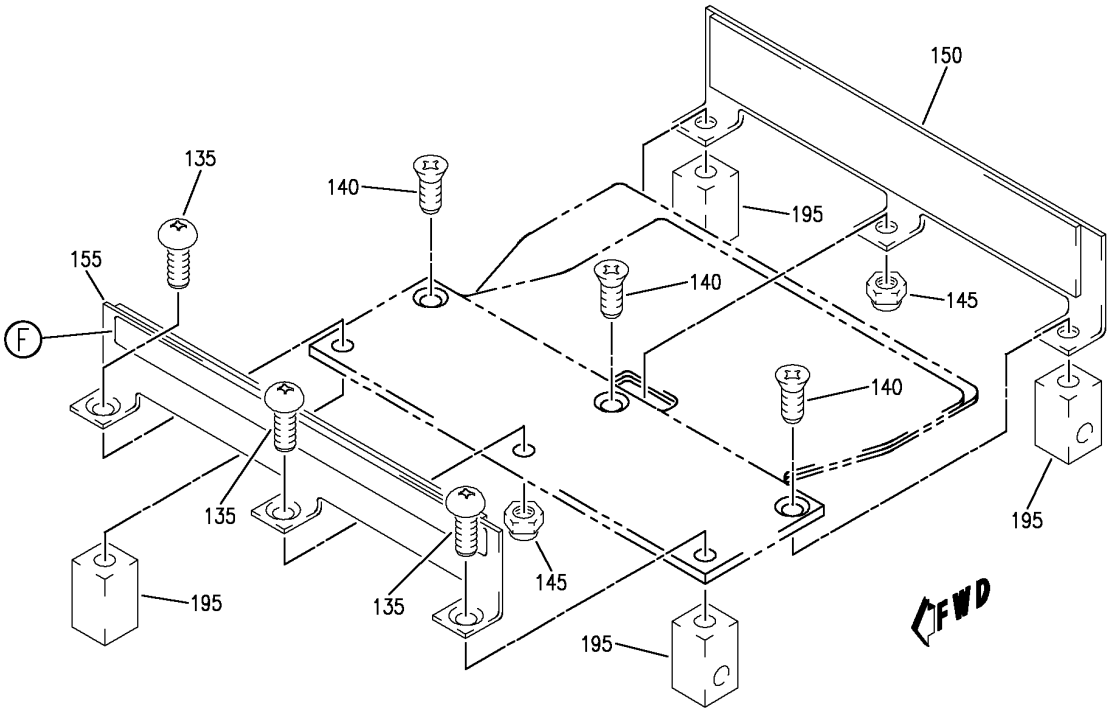

Y 31121191A SHT 3 REV 259

PANEL INSTL-P5 OVHD (INDICATING/RECORDING SYSTEMS ONLY)
FIGURE 91A (SHEET 3)

BOEING PROPRIETARY - Copyright © - Unpublished Work - See title page for details.

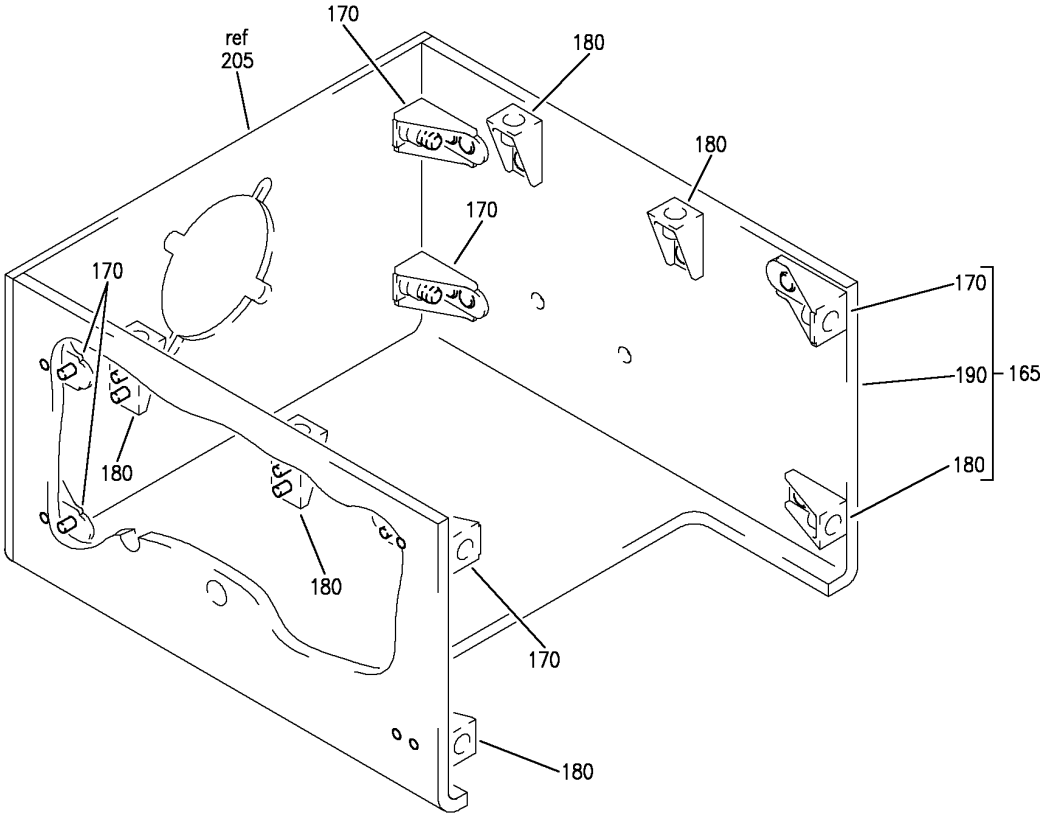

E

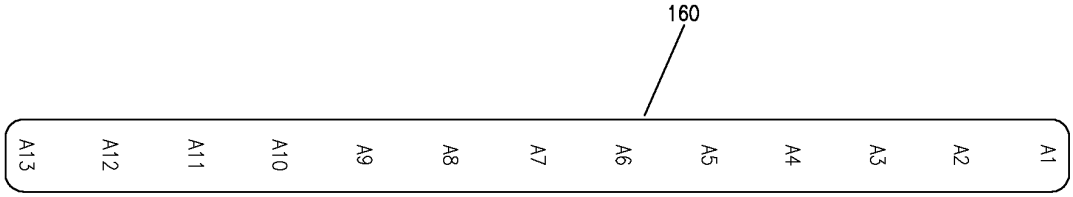

F

Y 31121191A SHT 4 REV 259

PANEL INSTL-P5 OVHD (INDICATING/RECORDING SYSTEMS ONLY)
FIGURE 91A (SHEET 4)

BOEING PROPRIETARY - Copyright © - Unpublished Work - See title page for details.

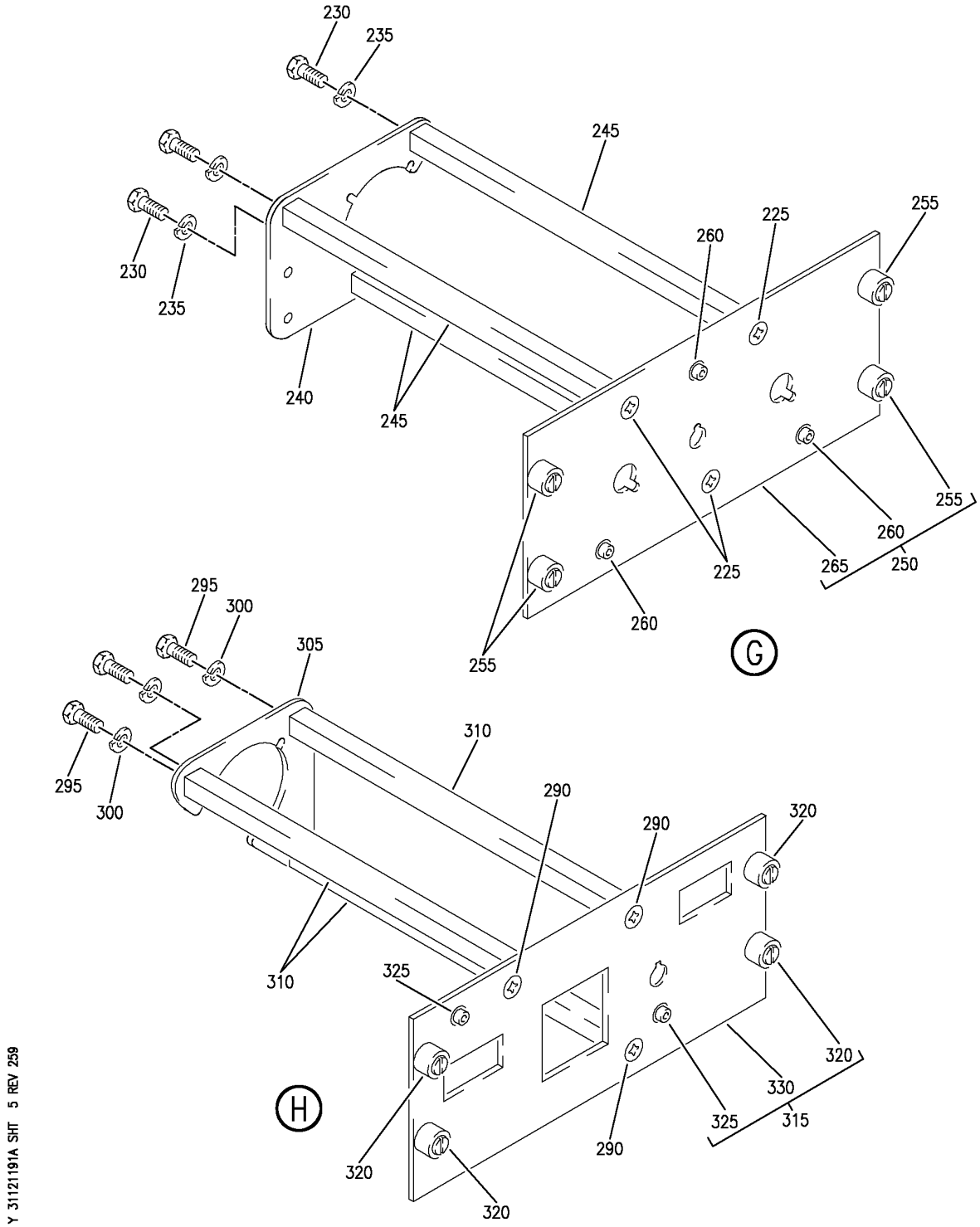

PANEL INSTL-P5 OVHD (INDICATING/RECORDING SYSTEMS ONLY)
FIGURE 91A (SHEET 5)

BOEING PROPRIETARY - Copyright © - Unpublished Work - See title page for details.

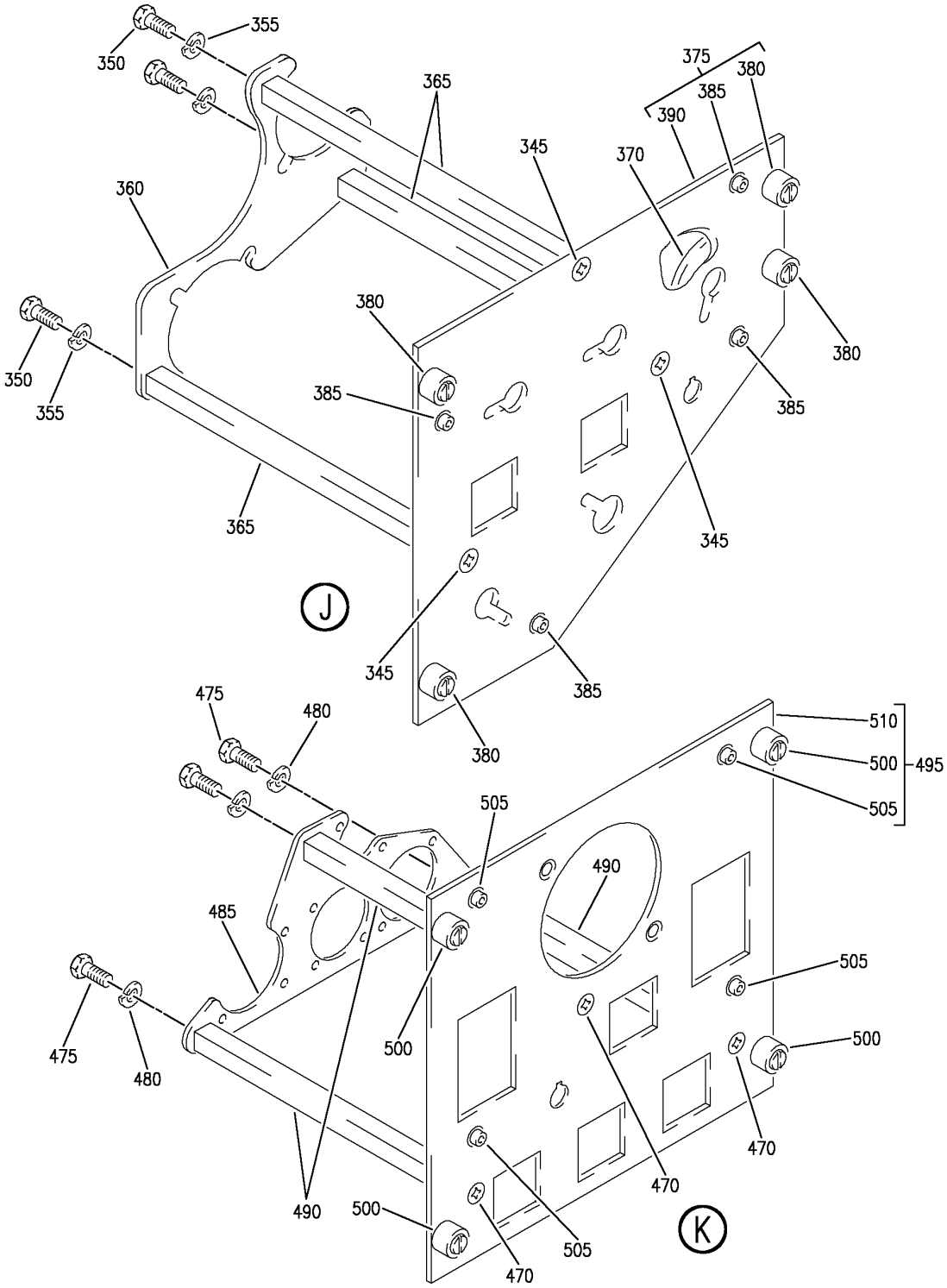

PANEL INSTL-P5 OVHD (INDICATING/RECORDING SYSTEMS ONLY)
FIGURE 91A (SHEET 6)

BOEING PROPRIETARY - Copyright © - Unpublished Work - See title page for details.

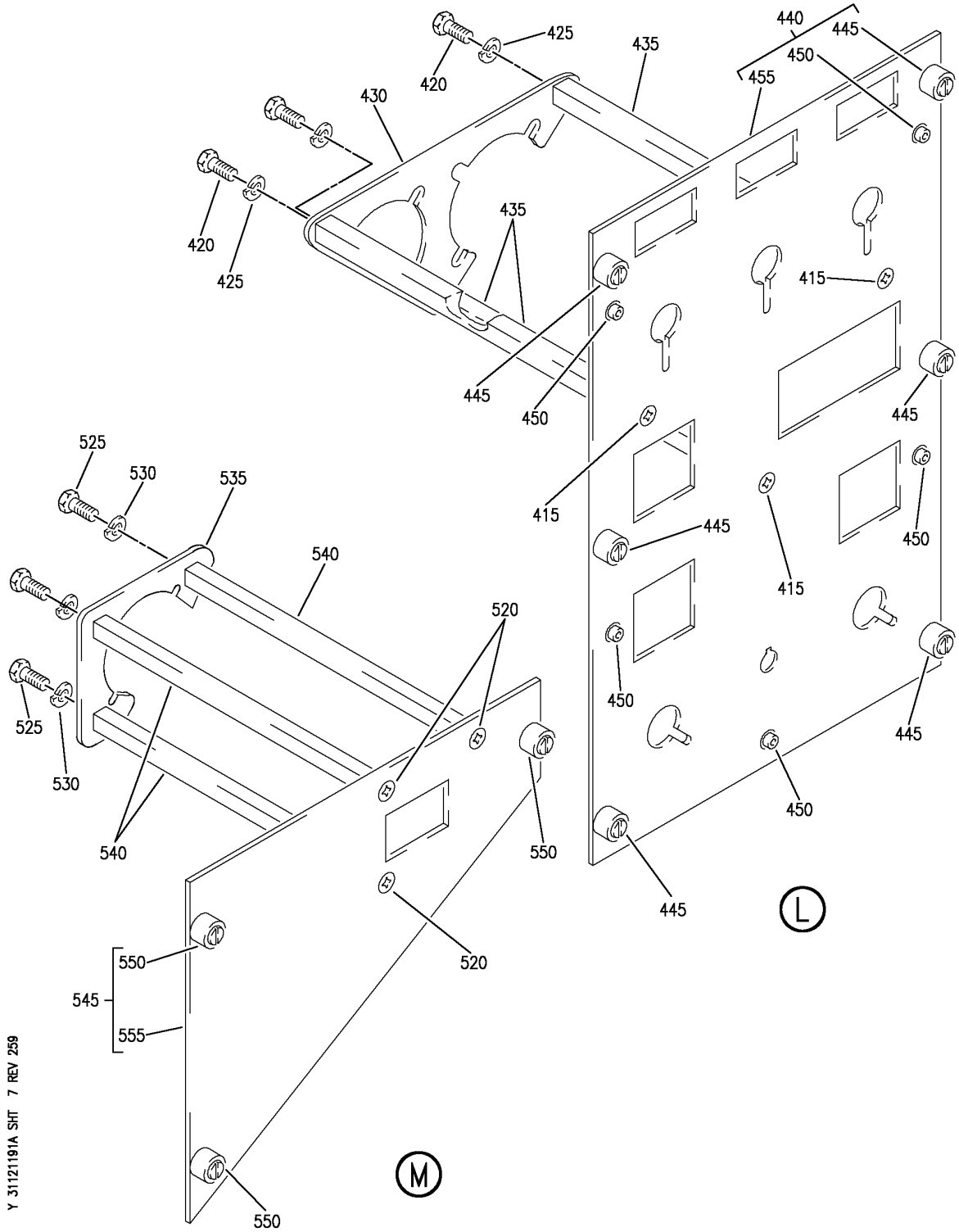

PANEL INSTL-P5 OVHD (INDICATING/RECORDING SYSTEMS ONLY)
FIGURE 91A (SHEET 7)

BOEING PROPRIETARY - Copyright © - Unpublished Work - See title page for details.

FIG ITEM	PART NUMBER	1 2 3 4 5 6 7 NOMENCLATURE	EFFECT FROM TO	UNITS PER ASSY
91A				
		PANEL INSTL-P5 OVHD (INDICATING/RECORDING SYSTEMS ONLY)	103105	
- 1	MODREF33760	PANEL INSTL-P5 OVHD (INDICATING/RECORDING SYSTEMS ONLY)	103103	1
		MODULE NUMBER: 233N3103-351 REV C		
		FOR OTHER SYS DETAILS SEE:		
		11-31-10-12		
		21-25-55-03		
		21-31-01-02		
		21-33-51-03		
		21-51-54-03		
		21-58-19-10		
		21-58-51-03		
		21-61-04-03		
		21-65-51-01		
		22-21-01-04		
		22-24-51-02		
		23-24-01-01		
		23-32-00-11		
		23-42-02-02		
		23-71-05-02		
		24-11-52-05		
		24-22-01-03		
		24-31-01-10		
		24-31-03-09		
		24-33-04-01		
		24-41-51-04		
		24-51-62-01		
		26-18-51-04		
		27-21-53-02		
		27-41-55-01		
		27-61-51-03		
		27-62-52-02		
		28-22-51-02		
		28-41-04-01		
		28-41-51-03		
		29-11-02-03		
		29-11-05-04		
		29-11-52-07		
		29-21-54-03		
		29-31-00-01		
		29-32-51-03		
		29-33-52-03		
		30-11-51-03		
		30-21-51-03		
		30-31-51-02		

MISSING ITEM NUMBERS NOT APPLICABLE

- ITEM NOT ILLUSTRATED

BOEING PROPRIETARY - Copyright © - Unpublished Work - See title page for details.

FIG ITEM	PART NUMBER	1 2 3 4 5 6 7 NOMENCLATURE	EFFECT FROM TO	UNITS PER ASSY
91A				
		30-32-51-01		
		30-33-51-02		
		30-41-51-03		
		30-42-51-03		
		32-42-52-03		
		33-11-03-03		
		33-11-51-17		
		33-13-01-65		
		33-13-02-03		
		33-16-51-03		
		33-24-51-02		
		33-41-52-04		
		33-42-01-04		
		33-42-02-04		
		33-42-52-04		
		33-43-51-04		
		33-44-51-05		
		33-45-53-03		
		33-51-08-05		
		34-21-02-01		
		35-21-51-04		
		36-11-04-01		
		36-21-00-01		
		36-21-02-05		
		36-22-51-03		
		49-41-00-02		
		49-52-00-01		
		49-70-00-01		
		52-51-51-03		
		52-71-51-02		
		73-21-52-02		
		74-31-51-05		
		75-32-00-01		
		80-11-09-02		
- 1	MODREF34038	PANEL INSTL-P5 OVHD (INDICATING/RECORDING SYSTEMS ONLY) MODULE NUMBER: 233N3103-351 REV D FOR OTHER SYS DETAILS SEE:	104105	1
		11-31-10-12		
		21-25-55-03		
		21-31-01-02		
		21-33-51-03		
		21-51-54-03		
		21-58-19-10		
		21-58-51-03		
		21-61-04-03		
		21-65-51-01		

MISSING ITEM NUMBERS NOT APPLICABLE

- ITEM NOT ILLUSTRATED

BOEING PROPRIETARY - Copyright © - Unpublished Work - See title page for details.

FIG ITEM	PART NUMBER	1 2 3 4 5 6 7 NOMENCLATURE	EFFECT FROM TO	UNITS PER ASSY
91A		22-21-01-04 22-24-51-02 23-24-01-01 23-32-00-11 23-42-02-02 23-71-05-02 24-11-52-05 24-22-01-03 24-31-01-10 24-31-03-09 24-33-04-01 24-41-51-04 24-51-62-01 26-18-51-04 27-21-53-02 27-41-55-01 27-61-51-03 27-62-52-02 28-22-51-02 28-41-04-01 28-41-51-03 29-11-02-03 29-11-05-04 29-11-52-07 29-21-54-03 29-31-00-01 29-32-51-03 29-33-52-03 30-11-51-03 30-21-51-03 30-31-51-02 30-32-51-01 30-33-51-02 30-41-51-03 30-42-51-03 32-42-52-03 33-11-03-03 33-11-51-17 33-13-01-65 33-13-02-03 33-16-51-03 33-24-51-02 33-41-52-04 33-42-01-04 33-42-02-04 33-42-52-04 33-43-51-04 33-44-51-05 33-45-53-03		

MISSING ITEM NUMBERS NOT APPLICABLE

– ITEM NOT ILLUSTRATED

BOEING PROPRIETARY - Copyright © - Unpublished Work - See title page for details.

FIG ITEM	PART NUMBER	1 2 3 4 5 6 7 NOMENCLATURE	EFFECT FROM TO	UNITS PER ASSY
91A				
		33-51-08-05		
		34-21-02-01		
		35-21-51-04		
		36-11-04-01		
		36-21-00-01		
		36-21-02-05		
		36-22-51-03		
		49-41-00-02		
		49-52-00-01		
		49-70-00-01		
		52-51-51-03		
		52-71-51-02		
		73-21-52-02		
		74-31-51-05		
		75-32-00-01		
		80-11-09-02		
10	BACP10U0150T	.PANEL ASSY	103105	1
15	233N3212-302	.PANEL ASSY-WINDOW HEAT	103105	1
		SUPPLIER CODE:		
		V89954		
		COMPONENT MAINT MANUAL REF:		
		30-41-71		
		OPTIONAL PART:		
		233N3212-300		
		V89954		
		FOR OTHER SYS DETAILS SEE:		
		30-41-51-03		
		33-13-01-65		
15	233N3212-300	.PANEL ASSY-WINDOW HEAT	103105	1
		SUPPLIER CODE:		
		V89954		
		COMPONENT MAINT MANUAL REF:		
		30-41-71		
		QUALIFIED I/W DATA:		
		THE 233N3212-300 PANEL		
		ASSY IS I/W THE		
		233N3212-11 PANEL ASSY		
		T/W THE S233T100-1073		
		LIGHTPLATE		
		OPTIONAL PART:		
		233N3212-302		
		V89954		
		FOR OTHER SYS DETAILS SEE:		
		30-41-51-03		
		33-13-01-65		

MISSING ITEM NUMBERS NOT APPLICABLE

— ITEM NOT ILLUSTRATED

BOEING PROPRIETARY - Copyright © - Unpublished Work - See title page for details.

FIG ITEM	PART NUMBER	1 2 3 4 5 6 7 NOMENCLATURE	EFFECT FROM TO	UNITS PER ASSY
91A				
- 20	233N3212-14	..PANEL ASSY-	103105	RF
		SUPPLIER CODE:		
		V89954		
		ELECTRICAL EQUIP NUMBER:		
		M10395		
		COMPONENT MAINT MANUAL REF:		
		30-41-71		
		USED ON:		
		233N3212-302		
- 20	233N3212-11	..PANEL ASSY-	103105	RF
		SUPPLIER CODE:		
		V89954		
		ELECTRICAL EQUIP NUMBER:		
		M10395		
		COMPONENT MAINT MANUAL REF:		
		30-41-71		
		QUALIFIED I/W DATA:		
		THE 233N3212-300 PANEL		
		ASSY IS I/W THE		
		233N3212-11 PANEL ASSY		
		T/W THE S233T100-1073		
		LIGHTPLATE		
		USED ON:		
		233N3212-300		
25	NAS514P632-5	...SCREW	103105	3
30	NAS1801-06-5	...SCREW-	103105	3
		USED ON:		
		233N3212-11		
30	BACS12HN06-5	...SCREW-	103105	3
		OPTIONAL PART:		
		NAS1801-06-5		
		USED ON:		
		233N3212-14		
30	NAS1801-06-5	...SCREW-	103105	3
		OPTIONAL PART:		
		BACS12HN06-5		
		USED ON:		
		233N3212-14		
35	MS35338-41	...WASHER-	103105	3
		USED ON:		
		233N3212-11		
35	BACW10EC06S	...WASHER-	103105	3
		USED ON:		
		233N3212-14		
40	233N3250-11	...BRACKET-CONN.	103105	1
45	69B46200-12	...STANDOFF	103105	3
50	233N3212-2	...BASEPLATE ASSY-	103105	1
		SUPPLIER CODE:		
		V89954		

MISSING ITEM NUMBERS NOT APPLICABLE

- ITEM NOT ILLUSTRATED

BOEING PROPRIETARY - Copyright © - Unpublished Work - See title page for details.

FIG ITEM	PART NUMBER	1 2 3 4 5 6 7 NOMENCLATURE	EFFECT FROM TO	UNITS PER ASSY
91A				
55	PFSC35-38ASEMB	....STUD ASSY SUPPLIER CODE: V72794 SPECIFICATION NUMBER: BACS21DX1B	103105	4
60	SF6G6CBB5D	....NUT SUPPLIER CODE: V12324 SPECIFICATION NUMBER: BACN10PA06-6	103105	2
65	233N3212-3	....BASEPLATE- SUPPLIER CODE: V89954	103105	1
70	BACP10U0487T	.PANEL ASSY	103105	1
75	285T0024-53	.MODULE ASSY-PILOTS CALL PNL SUPPLIER CODE: V89954 ELECTRICAL EQUIP NUMBER: M00051 COMPONENT MAINT MANUAL REF: 23-42-62 FOR BREAKDOWN SEE: 23-42-02-02 33-13-01-65	103105	1
75	285T0024-46	.MODULE ASSY-PILOTS CALL PNL SUPPLIER CODE: V89954 ELECTRICAL EQUIP NUMBER: M00051 COMPONENT MAINT MANUAL REF: 23-42-62 FOR BREAKDOWN SEE: 23-42-02-02 33-13-01-65	103105	1
80	BAC27TEX0933	..MARKER-ALUMINUM FOIL SUPPLIER CODE: V89954	103105	1
85	NAS514P632-5	..SCREW	103105	2
90	NAS514P440-5	..SCREW	103105	2
95	285T0157-40	..PANEL ASSY- SUPPLIER CODE: V89954 USED ON: 285T0024-53	103105	1

MISSING ITEM NUMBERS NOT APPLICABLE

— ITEM NOT ILLUSTRATED

BOEING PROPRIETARY - Copyright © - Unpublished Work - See title page for details.

FIG ITEM	PART NUMBER	1 2 3 4 5 6 7 NOMENCLATURE	EFFECT FROM TO	UNITS PER ASSY
91A				
100	285T0157-47	..PANEL ASSY- SUPPLIER CODE: V89954 USED ON: 285T0024-46	103105	1
105	PFSC35-38ASEMB	...STUD ASSY SUPPLIER CODE: V72794 SPECIFICATION NUMBER: BACS21DX1B	103105	4
110	SF6G6CBB5D	...NUT SUPPLIER CODE: V12324 SPECIFICATION NUMBER: BACN10PA06-6	103105	2
115	285T0157-41	...PANEL- SUPPLIER CODE: V89954 ALTERED FROM PART NUMBER: BACP10U0300N USED ON: 285T0157-40	103105	1
120	285T0157-48	...PANEL- SUPPLIER CODE: V89954 USED ON: 285T0157-47	103105	1
125	285T0158-29	..COVER ASSY- SUPPLIER CODE: V89954 ATTACHING PARTS	103105	1
- 130	NAS514P440-5	..SCREW -------*-------	103105	4
135	MS35214-13	..SCREW	103105	3
140	NAS514P440-5	..SCREW	103105	3
145	92-1660-40	..NUT SUPPLIER CODE: V72962 SPECIFICATION NUMBER: BACN10DN40 OPTIONAL PART: 92-1660-440 V15653	103105	2
150	285T0158-27	..BRACKET ASSY- SUPPLIER CODE: V89954	103105	1
155	285T0158-25	..BRACKET ASSY- SUPPLIER CODE: V89954	103105	1

MISSING ITEM NUMBERS NOT APPLICABLE

- ITEM NOT ILLUSTRATED

BOEING PROPRIETARY - Copyright © - Unpublished Work - See title page for details.

FIG ITEM	PART NUMBER	1 2 3 4 5 6 7 NOMENCLATURE	EFFECT FROM TO	UNITS PER ASSY
91A				
160	BAC27TEX1986	...DECAL-	103105	1
		SUPPLIER CODE:		
		V89954		
165	285T0158-23	..BRACKET ASSY-	103105	1
		SUPPLIER CODE:		
		V89954		
170	MF6000-06	...NUTPLATE	103105	6
		SUPPLIER CODE:		
		V15653		
		SPECIFICATION NUMBER:		
		BACN10KJ06		
		ATTACHING PARTS		
- 175	BACR15BA3AD	...RIVET-	103105	12
		SIZE DETERMINED ON INSTL.		
		-------*-------		
180	F22A27M22-40	...NUT-	103105	6
		SUPPLIER CODE:		
		V0217B		
		ATTACHING PARTS		
- 185	BACR15BA2AD	...RIVET-	103105	12
		SIZE DETERMINED ON INSTL.		
		-------*-------		
190	285T0158-22	...BRACKET-	103105	1
		SUPPLIER CODE:		
		V89954		
195	285T0158-21	..BLOCK-MTG	103105	4
		SUPPLIER CODE:		
		V89954		
		ATTACHING PARTS		
- 200	NAS514P440-5	..SCREW	103105	4
		-------*-------		
205	285T0158-7	..PANEL-	103105	1
		SUPPLIER CODE:		
		V89954		
		ATTACHING PARTS		
- 210	NAS1801-06-5	..SCREW	103105	4
		-------*-------		
215	233T3216-300	.PANEL ASSY-PASS. SIGNS	103105	1
		SUPPLIER CODE:		
		V89954		
		ELECTRICAL EQUIP NUMBER:		
		M00052		
		COMPONENT MAINT MANUAL REF:		
		33-24-02		
		FOR OTHER SYS DETAILS SEE:		
		33-13-01-65		
		33-24-51-02		

MISSING ITEM NUMBERS NOT APPLICABLE

- ITEM NOT ILLUSTRATED

BOEING PROPRIETARY - Copyright © - Unpublished Work - See title page for details.

FIG ITEM	PART NUMBER	1 2 3 4 5 6 7 NOMENCLATURE	EFFECT FROM TO	UNITS PER ASSY
91A				
- 220	233T3216-10	..PANEL ASSY- SUPPLIER CODE: V89954 COMPONENT MAINT MANUAL REF: 33-24-02	103105	RF
225	NAS514P632-5	...SCREW	103105	3
230	NAS1801-06-05	...SCREW	103105	3
235	MS35338-41	...WASHER	103105	3
240	233T6200-85	...BRACKET-SPRT	103105	1
245	69B46200-9	...STANDOFF	103105	3
250	233T3216-2	...BASEPLATE ASSY- SUPPLIER CODE: V89954	103105	1
255	BACS21DD1B	....STUD ASSY SUPPLIER CODE: V08524 SPECIFICATION NUMBER: BACS21DD1B	103105	4
260	SF6G6CBB5D	....NUT SUPPLIER CODE: V12324 SPECIFICATION NUMBER: BACN10PA06-6	103105	3
265	233T3216-3	....BASEPLATE- SUPPLIER CODE: V89954	103105	1
270	130502-7	.PANEL ASSY-CAB. ALTITUDE SUPPLIER CODE: V64547 FUNCTIONAL DESCRIPTION: SELECTOR CONTAINS CONTROLS AND CIRCUITRY NECESSARY FOR AUTOMATIC OR MANUAL PRESSURE SELECTION SPECIFICATION NUMBER: S210T160-72 ELECTRICAL EQUIP NUMBER: M00013 COMPONENT MAINT MANUAL REF: 21-31-50 FOR BREAKDOWN SEE: 21-31-01-02	103105	RF

MISSING ITEM NUMBERS NOT APPLICABLE

- ITEM NOT ILLUSTRATED

BOEING PROPRIETARY - Copyright © - Unpublished Work - See title page for details.

FIG ITEM	PART NUMBER	1 2 3 4 5 6 7 NOMENCLATURE	EFFECT FROM TO	UNITS PER ASSY
91A				
270	130502-6	.PANEL ASSY-CAB. ALTITUDE SUPPLIER CODE: V64547 SPECIFICATION NUMBER: S210T160-62 ELECTRICAL EQUIP NUMBER: M00013 COMPONENT MAINT MANUAL REF: 21-31-50 FOR BREAKDOWN SEE: 21-31-01-02	103105	RF
270	130502-5	.PANEL ASSY-CAB. ALTITUDE SUPPLIER CODE: V64547 SPECIFICATION NUMBER: S210T160-52 ELECTRICAL EQUIP NUMBER: M00013 COMPONENT MAINT MANUAL REF: 21-31-50 FOR BREAKDOWN SEE: 21-31-01-02	103105	RF
270	130502-4	.PANEL ASSY-CAB. ALTITUDE SUPPLIER CODE: V64547 SPECIFICATION NUMBER: S210T160-42 ELECTRICAL EQUIP NUMBER: M00013 COMPONENT MAINT MANUAL REF: 21-31-50 FOR BREAKDOWN SEE: 21-31-01-02	103105	RF

MISSING ITEM NUMBERS NOT APPLICABLE

– ITEM NOT ILLUSTRATED

BOEING PROPRIETARY - Copyright © - Unpublished Work - See title page for details.

FIG ITEM	PART NUMBER	1 2 3 4 5 6 7 NOMENCLATURE	EFFECT FROM TO	UNITS PER ASSY
91A				
275	SETL0C420M	.PANEL ASSY-CAB. PRESSURE GAUGES SUPPLIER CODE: V61349 FUNCTIONAL DESCRIPTION: PROVIDES CABIN PRESSURE RATE OF CLIMB OR DESCENT CABIN TO AMBIENT DIFFERENTIAL PRESSURE AND CABIN ALTITUDE SPECIFICATION NUMBER: S231N210-14 ELECTRICAL EQUIP NUMBER: M00019 COMPONENT MAINT MANUAL REF: 21-33-07 FOR BREAKDOWN SEE: 21-33-51-03	103105	RF
280	233N3203-337	.PANEL ASSY-EQPT COOLING SUPPLIER CODE: V89954 COMPONENT MAINT MANUAL REF: 21-58-71 FOR OTHER SYS DETAILS SEE: 11-31-10-12 21-33-51-03 21-58-19-10 21-58-51-03 33-13-01-65	103105	1
- 285	233N3203-37	..PANEL ASSY- SUPPLIER CODE: V89954 ELECTRICAL EQUIP NUMBER: M10067 COMPONENT MAINT MANUAL REF: 21-58-71	103105	RF
290	NAS514P632-6	...SCREW	103105	3
295	BACS12HN06-5	...SCREW	103105	3
300	BACW10EC06S	...WASHER	103105	3
305	233N3250-10	...BRACKET-CONN.	103105	1
310	69B46200-11	...STANDOFF	103105	3
315	233N3203-19	...BASEPLATE ASSY- SUPPLIER CODE: V89954	103105	1
320	PFSC35-38ASEMB	....STUD ASSY SUPPLIER CODE: V72794 SPECIFICATION NUMBER: BACS21DX1B	103105	4

MISSING ITEM NUMBERS NOT APPLICABLE

- ITEM NOT ILLUSTRATED

BOEING PROPRIETARY - Copyright © - Unpublished Work - See title page for details.

FIG ITEM	PART NUMBER	1 2 3 4 5 6 7 NOMENCLATURE	EFFECT FROM TO	UNITS PER ASSY
91A				
325	SF6G6CBB5D	....NUT SUPPLIER CODE: V12324 SPECIFICATION NUMBER: BACN10PA06-6	103105	2
330	233N3203-21	....BASEPLATE- SUPPLIER CODE: V89954	103105	1
335	233N3221-326	.PANEL ASSY-LIGHTING CONT SUPPLIER CODE: V89954 POSITION DATA: R COMPONENT MAINT MANUAL REF: 33-11-72 FOR OTHER SYS DETAILS SEE: 33-11-51-17 33-13-02-03 33-16-51-03 33-45-53-03 52-51-51-03	103105	1
- 340	233N3221-110	..PANEL ASSY- SUPPLIER CODE: V89954 ELECTRICAL EQUIP NUMBER: M10057 COMPONENT MAINT MANUAL REF: 33-11-72	103105	RF
345	FH6C5CPL12BN	...SCREW- SUPPLIER CODE: V12324	103105	3
350	BACS12HN06-5	...SCREW	103105	3
355	BACW10EC06CD	...WASHER	103105	3
360	233N3250-48	...BRACKET-CONN.	103105	1
365	69B46200-10	...STANDOFF	103105	3
370	65B40112-12	...SPACER- OPTIONAL PART: 233N3221-42 V89954	103105	1
370	233N3221-42	...SPACER- SUPPLIER CODE: V89954 OPTIONAL PART: 65B40112-12	103105	1
375	233N3221-104	...BASEPLATE ASSY- SUPPLIER CODE: V89954	103105	1

MISSING ITEM NUMBERS NOT APPLICABLE

- ITEM NOT ILLUSTRATED

BOEING PROPRIETARY - Copyright © - Unpublished Work - See title page for details.

FIG ITEM	PART NUMBER	1 2 3 4 5 6 7 NOMENCLATURE	EFFECT FROM TO	UNITS PER ASSY
91A				
380	PFSC35-38ASEMB	....STUD ASSY SUPPLIER CODE: V72794 SPECIFICATION NUMBER: BACS21DX1B	103105	4
385	SF6G6CBB5D	....NUT- SUPPLIER CODE: V12324	103105	4
390	233N3221-105	....BASEPLATE- SUPPLIER CODE: V89954	103105	1
395	BACP10U0300T	.PANEL ASSY	103105	1
400	2263-01-1	.INDICATOR ASSY-COMPT TEMP SUPPLIER CODE: V52013 FUNCTIONAL DESCRIPTION: INDICATOR SHOWS COMPARTMENT TEMPERATURE FOR EA OF THE THREE CABIN ZONES SPECIFICATION NUMBER: S231N211-3 ELECTRICAL EQUIP NUMBER: M10078 COMPONENT MAINT MANUAL REF: 21-61-02 FOR BREAKDOWN SEE: 21-65-51-01	103105	RF
400	20-210-01	.INDICATOR ASSY-COMPT TEMP SUPPLIER CODE: V35012 SPECIFICATION NUMBER: S231N211-2 ELECTRICAL EQUIP NUMBER: M10078 COMPONENT MAINT MANUAL REF: 21-65-01 FOR BREAKDOWN SEE: 21-65-51-01	103105	RF

MISSING ITEM NUMBERS NOT APPLICABLE

– ITEM NOT ILLUSTRATED

BOEING PROPRIETARY - Copyright © - Unpublished Work - See title page for details.

FIG ITEM	PART NUMBER	1 2 3 4 5 6 7 NOMENCLATURE	EFFECT FROM TO	UNITS PER ASSY
91A				
405	233N3217-300	.PANEL ASSY-AIR CONDITIONING SUPPLIER CODE: V89954 COMPONENT MAINT MANUAL REF: 21-51-71 QUALIFIED I/W DATA: THE 233N3217-300 PANEL ASSY IS I/W THE 233N3217-15 PANEL ASSY T/W THE S233T100-6014 LIGHTPLATE AND (2) BP248-127 KNOBS AND (3) BP260-113 KNOBS FOR OTHER SYS DETAILS SEE: 21-25-55-03 21-51-54-03 21-61-04-03 33-13-01-65	103105	1
- 410	233N3217-15	..PANEL ASSY- SUPPLIER CODE: V89954 ELECTRICAL EQUIP NUMBER: M00014 COMPONENT MAINT MANUAL REF: 21-51-71 QUALIFIED I/W DATA: THE 233N3217-300 PANEL ASSY IS I/W THE 233N3217-15 PANEL ASSY T/W THE S233T100-6014 LIGHTPLATE AND (2) BP248-127 KNOBS AND (3) BP260-113 KNOBS	103105	RF
415	NAS514P632-5	...SCREW	103105	3
420	NAS1801-06-5	...SCREW- OPTIONAL PART: BACS12HN06-5	103105	3
420	BACS12HN06-5	...SCREW- OPTIONAL PART: NAS1801-06-5	103105	3
425	BACW10EC06S	...WASHER	103105	3
430	233N3250-13	...BRACKET	103105	1
435	69B46200-14	...STANDOFF	103105	3

MISSING ITEM NUMBERS NOT APPLICABLE

- ITEM NOT ILLUSTRATED

BOEING PROPRIETARY - Copyright © - Unpublished Work - See title page for details.

FIG ITEM	PART NUMBER	1 2 3 4 5 6 7 NOMENCLATURE	EFFECT FROM TO	UNITS PER ASSY
91A				
440	233N3217-9	...BASEPLATE ASSY- SUPPLIER CODE: V89954 OPTIONAL PART: 233N3217-2 V89954	103105	1
440	233N3217-2	...BASEPLATE ASSY- SUPPLIER CODE: V89954 OPTIONAL PART: 233N3217-9 V89954	103105	1
445	PFSC35-38ASEMB	....STUD ASSY SUPPLIER CODE: V72794 SPECIFICATION NUMBER: BACS21DX1B	103105	6
450	SF6G6CBB5D	....NUT SUPPLIER CODE: V12324 SPECIFICATION NUMBER: BACN10PA06-6	103105	5
455	233N3217-10	....BASEPLATE- SUPPLIER CODE: V89954 USED ON: 233N3217-9	103105	1
455	233N3217-3	....BASEPLATE- SUPPLIER CODE: V89954 USED ON: 233N3217-2	103105	1
460	233N3215-303	.PANEL ASSY-BLEED AIR SUPPLIER CODE: V89954 COMPONENT MAINT MANUAL REF: 36-11-71 FOR OTHER SYS DETAILS SEE: 26-18-51-04 33-13-01-65 36-11-04-01 36-21-00-01 36-21-02-05 36-22-51-03 49-52-00-01 75-32-00-01	103105	1

MISSING ITEM NUMBERS NOT APPLICABLE

– ITEM NOT ILLUSTRATED

BOEING PROPRIETARY - Copyright © - Unpublished Work - See title page for details.

FIG ITEM	PART NUMBER	1 2 3 4 5 6 7 NOMENCLATURE	EFFECT FROM TO	UNITS PER ASSY
91A				
- 465	233N3215-22	..PANEL ASSY- SUPPLIER CODE: V89954 MISCELLANEOUS DATA: FOR SPARES PROCURE NEXT HIGHER ASSY ELECTRICAL EQUIP NUMBER: M10259 COMPONENT MAINT MANUAL REF: 36-11-71	103105	RF
470	FH6C5TPKL12BN	...SCREW- SUPPLIER CODE: V12324	103105	3
475	BACS12HN06-5	...SCREW	103105	3
480	BACW10EC06S	...WASHER	103105	3
485	233N3250-39	...BRACKET-CONN.	103105	1
490	69B46200-11	...STANDOFF	103105	3
495	233N3215-10	...BASEPLATE ASSY- SUPPLIER CODE: V89954	103105	1
500	PFSC35-38ASEMB	....STUD ASSY SUPPLIER CODE: V72794 SPECIFICATION NUMBER: BACS21DX1B	103105	4
505	SF6G6CBB5D	....NUT SUPPLIER CODE: V12324 SPECIFICATION NUMBER: BACN10PA06-6	103105	4
510	233N3215-11	....BASEPLATE- SUPPLIER CODE: V89954	103105	1
515	233T3230-22	.PANEL ASSY-ENTERTAINMENT ELECTRICAL EQUIP NUMBER: M01111 COMPONENT MAINT MANUAL REF: 23-32-52 FOR BREAKDOWN SEE: 23-32-00-11	103105	1
520	NAS514P632-5	..SCREW	103105	3
525	BACS12CB06-5	..SCREW	103105	3
530	MS35338-41	..WASHER	103105	3
535	233T6200-27	..BRACKET-SPRT	103105	1
540	69B46200-10	..STANDOFF	103105	3
545	233T3230-2	..BASEPLATE ASSY	103105	1

MISSING ITEM NUMBERS NOT APPLICABLE

- ITEM NOT ILLUSTRATED

BOEING PROPRIETARY - Copyright © - Unpublished Work - See title page for details.

FIG ITEM	PART NUMBER	1 2 3 4 5 6 7 NOMENCLATURE	EFFECT FROM TO	UNITS PER ASSY
91A				
550	BACS21DD1B	...STUD ASSY SUPPLIER CODE: V08524 SPECIFICATION NUMBER: BACS21DD1B	103105	3
555	233T3200-3	...BASEPLATE	103105	1

MISSING ITEM NUMBERS NOT APPLICABLE

– ITEM NOT ILLUSTRATED

BOEING PROPRIETARY - Copyright © - Unpublished Work - See title page for details.

PILOTS AUXILIARY PANEL

BOEING PROPRIETARY - Copyright © - Unpublished Work - See title page for details.

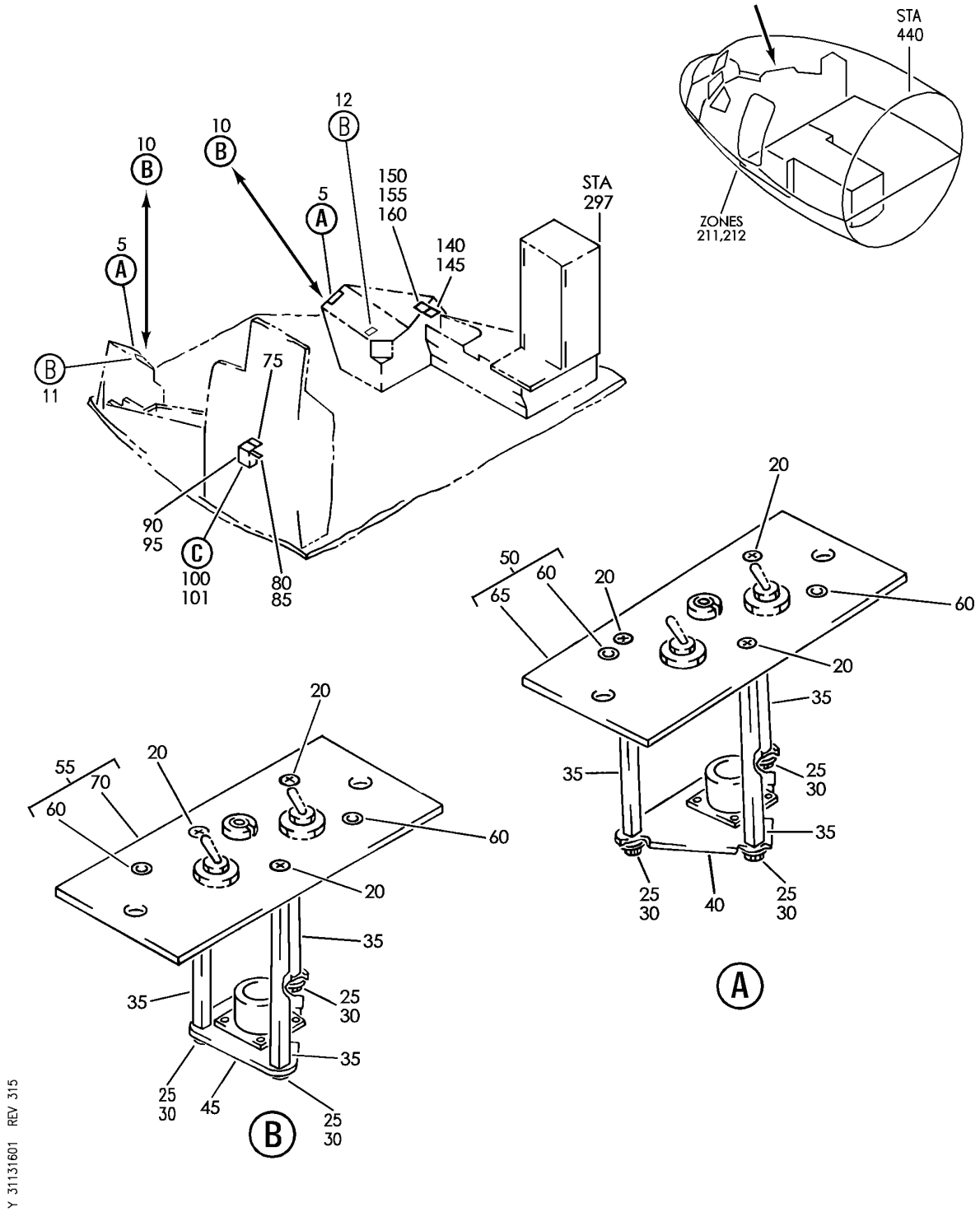

PANEL INSTL-P13, P14 AND P17 AUX (INDICATING/RECORDING ONLY)
FIGURE 1 (SHEET 1)

BOEING PROPRIETARY - Copyright © - Unpublished Work - See title page for details.

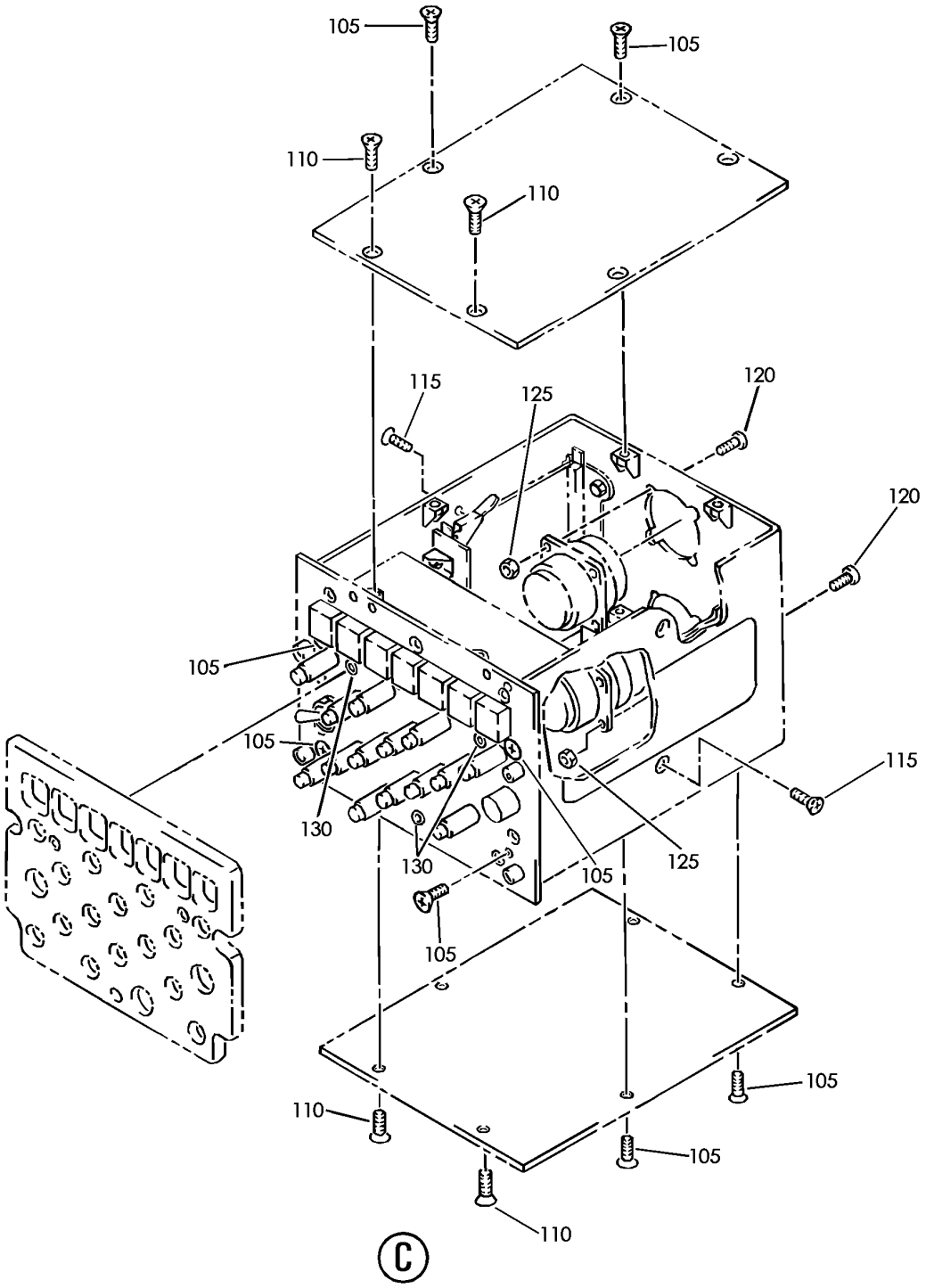

PANEL INSTL-P13, P14 AND P17 AUX (INDICATING/RECORDING ONLY)
FIGURE 1 (SHEET 2)

BOEING PROPRIETARY - Copyright © - Unpublished Work - See title page for details.

FIG ITEM	PART NUMBER	1 2 3 4 5 6 7 NOMENCLATURE	EFFECT FROM TO	UNITS PER ASSY
1				
		PANEL INSTL-P13, P14 AND P17 AUX (INDICATING/RECORDING ONLY)	002004 006010 107107 121503 904999	
- 1	233N7101-1	PANEL INSTL-P13, P14 AND P17 AUX (INDICATING/RECORDING ONLY) VARIABLE DRAWING REF: 233N7101-5002 233N7101-5003 233N7101-5026 233N7101-5027 233N7101-5030 FOR NHA/OTHER SYS DET SEE: 25-10-00-05A	002004 006010 107107 121503 904999	RF
5	233T7210-1	.PANEL ASSY-AUX HEATER CONT SUPPLIER CODE: V89954 ELECTRICAL EQUIP NUMBER: M00901 M00902 COMPONENT MAINT MANUAL REF: 21-45-01 FOR OTHER SYS DETAILS SEE: 21-45-01-03 21-45-02-04	107107	2
10	233T7210-6	.PANEL ASSY-AUX HEATER CONT SUPPLIER CODE: V89954 ELECTRICAL EQUIP NUMBER: M00901 M00902 COMPONENT MAINT MANUAL REF: 21-45-01 FOR OTHER SYS DETAILS SEE: 21-45-01-03 21-45-02-04 ATTACHING PARTS	002004 006010 107107 121503 904999	2
- 15	SFSW10F5DL11BG	.SCREW- SUPPLIER CODE: V12324	002004 006010 107107 121503 904999	4
		-------*-------		

MISSING ITEM NUMBERS NOT APPLICABLE

- ITEM NOT ILLUSTRATED

BOEING PROPRIETARY - Copyright © - Unpublished Work - See title page for details.

FIG ITEM	PART NUMBER	1 2 3 4 5 6 7 NOMENCLATURE	EFFECT FROM TO	UNITS PER ASSY
1				
20	NAS514P632-5	..SCREW	002004 006010 107107 121503 904999	3
25	BACS12CB06-5	..SCREW	002004 006010 107107 121503 904999	3
30	MS35338-41	..WASHER	002004 006010 107107 121503 904999	3
35	69B46200-5	..STANDOFF	002004 006010 107107 121503 904999	3
40	233T6200-42	..BRACKET-SPRT USED ON: 233T7210-1	107107	1
45	233T6200-86	..BRACKET-SPRT USED ON: 233T7210-6 233T7210-23 233T7210-24	002004 006010 107107 121503 904999	1
50	233T7210-2	..BASEPLATE ASSY- SUPPLIER CODE: V89954 USED ON: 233T7210-1	107107	1
55	233T7210-7	..BASEPLATE ASSY- SUPPLIER CODE: V89954 USED ON: 233T7210-6 233T7210-23 233T7210-24	002004 006010 107107 121503 904999	1
60	SF6G6CBB5D	...NUT SUPPLIER CODE: V12324 SPECIFICATION NUMBER: BACN10PA06-6	002004 006010 107107 121503 904999	2

MISSING ITEM NUMBERS NOT APPLICABLE

– ITEM NOT ILLUSTRATED

BOEING PROPRIETARY - Copyright © - Unpublished Work - See title page for details.

FIG ITEM	PART NUMBER	1 2 3 4 5 6 7 NOMENCLATURE	EFFECT FROM TO	UNITS PER ASSY
1				
65	233T7210-3	...BASEPLATE- SUPPLIER CODE: V89954 USED ON: 233T7210-2	107107	1
70	233T7210-8	...BASEPLATE- SUPPLIER CODE: V89954 USED ON: 233T7210-7	002004 006010 107107 121503 904999	1
75	BACP10U0225T	.PANEL	002004 006010 107107 121503 904999	1
100	285T0022-22	.PANEL ASSY-AUDIO SELECTOR SUPPLIER CODE: V89954 ELECTRICAL EQUIP NUMBER: M00098 COMPONENT MAINT MANUAL REF: 23-51-51 FOR OTHER SYS DETAILS SEE: 11-33-01-02 23-51-01-03 33-13-60-01	002004 006010 107107 121503 904949	1
100	285T0022-27	.PANEL ASSY-AUDIO SELECTOR SUPPLIER CODE: V89954 ELECTRICAL EQUIP NUMBER: M00098 COMPONENT MAINT MANUAL REF: 23-51-51 FOR OTHER SYS DETAILS SEE: 11-33-01-02 23-51-01-03 33-13-60-01	950952	1
100	285T0022-28	.PANEL ASSY-AUDIO SELECTOR SUPPLIER CODE: V89954 ELECTRICAL EQUIP NUMBER: M00098 COMPONENT MAINT MANUAL REF: 23-51-51 FOR OTHER SYS DETAILS SEE: 11-33-01-02 23-51-01-03 33-13-60-01	002004 006010 107107 121503 904949	1

MISSING ITEM NUMBERS NOT APPLICABLE

– ITEM NOT ILLUSTRATED

BOEING PROPRIETARY - Copyright © - Unpublished Work - See title page for details.

FIG ITEM	PART NUMBER	1 2 3 4 5 6 7 NOMENCLATURE	EFFECT FROM TO	UNITS PER ASSY
1				
100	285T0022-31	.PANEL ASSY-AUDIO SELECTOR SUPPLIER CODE: V89954 ELECTRICAL EQUIP NUMBER: M00098 COMPONENT MAINT MANUAL REF: 23-51-54 FOR OTHER SYS DETAILS SEE: 11-33-01-02 23-51-01-03 33-13-60-01	953999	1
100	285T0022-37	.PANEL ASSY-AUDIO SELECTOR SUPPLIER CODE: V89954 ELECTRICAL EQUIP NUMBER: M00098 COMPONENT MAINT MANUAL REF: 23-51-54 FOR OTHER SYS DETAILS SEE: 11-33-01-02 23-51-01-03 33-13-60-01	950952	1
100	285T0022-38	.PANEL ASSY-AUDIO SELECTOR SUPPLIER CODE: V89954 ELECTRICAL EQUIP NUMBER: M00098 COMPONENT MAINT MANUAL REF: 23-51-54 FOR OTHER SYS DETAILS SEE: 11-33-01-02 23-51-01-03 33-13-60-01	002004 006010 107107 121503 904949	1
R R R R R R R R R R R 100	285T0022-38	.PANEL ASSY-AUDIO SELECTOR SUPPLIER CODE: V89954 ELECTRICAL EQUIP NUMBER: M00098 COMPONENT MAINT MANUAL REF: 23-51-54 FOR OTHER SYS DETAILS SEE: 11-33-01-02 23-51-01-03 33-13-60-01	002004 006010 107107 121503 904949	1

MISSING ITEM NUMBERS NOT APPLICABLE

– ITEM NOT ILLUSTRATED

BOEING PROPRIETARY - Copyright © - Unpublished Work - See title page for details.

FIG ITEM	PART NUMBER	1 2 3 4 5 6 7 NOMENCLATURE	EFFECT FROM TO	UNITS PER ASSY
1				
100	285T0022-41	.PANEL ASSY-AUDIO SELECTOR SUPPLIER CODE: V89954 ELECTRICAL EQUIP NUMBER: M00098 COMPONENT MAINT MANUAL REF: 23-51-54 FOR OTHER SYS DETAILS SEE: 11-33-01-02 23-51-01-03 33-13-60-01	953999	1
101	285T0022-43	.PANEL ASSY-AUDIO SELECTOR SUPPLIER CODE: V89954 ELECTRICAL EQUIP NUMBER: M00098 COMPONENT MAINT MANUAL REF: 23-51-54 FOR OTHER SYS DETAILS SEE: 11-33-01-02 23-51-01-03 33-13-60-01	950952	1
101	285T0022-44	.PANEL ASSY-AUDIO SELECTOR SUPPLIER CODE: V89954 ELECTRICAL EQUIP NUMBER: M00098 COMPONENT MAINT MANUAL REF: 23-51-54 FOR OTHER SYS DETAILS SEE: 11-33-01-02 23-51-01-03 33-13-60-01	002004 006010 107107 121503 904949	1
R 101	285T0022-44	.PANEL ASSY-AUDIO SELECTOR SUPPLIER CODE: V89954 ELECTRICAL EQUIP NUMBER: M00098 COMPONENT MAINT MANUAL REF: 23-51-54 FOR OTHER SYS DETAILS SEE: 11-33-01-02 23-51-01-03 33-13-60-01	002004 006010 107107 121503 904949	1
105	NAS514P440-5	..SCREW	002004 006010 107107 121503 904999	12

MISSING ITEM NUMBERS NOT APPLICABLE

— ITEM NOT ILLUSTRATED

BOEING PROPRIETARY - Copyright © - Unpublished Work - See title page for details.

FIG ITEM	PART NUMBER	1 2 3 4 5 6 7 NOMENCLATURE	EFFECT FROM TO	UNITS PER ASSY
1				
110	NAS514P632-5	..SCREW	002004 006010 107107 121503 904999	4
115	NAS514P440-4	..SCREW	002004 006010 107107 121503 904999	4
120	NAS1801-04-4	..SCREW	002004 006010 107107 121503 904999	8
125	BRH10A04	..NUT SUPPLIER CODE: V52828 SPECIFICATION NUMBER: BACN10JC04 OPTIONAL PART: NS202101-40 V80539 RMLH9075-40W V72962 VN303A40 V92215 96-40 V80539 T6S440J V11815 H10-04BAC V15653	002004 006010 107107 121503 904999	8
130	SF6G6CBB5D	..NUT SUPPLIER CODE: V12324 SPECIFICATION NUMBER: BACN10PA06-6	002004 006010 107107 121503 904999	3
145	BACP10U0600T	.PANEL ASSY	121503 904949	1
155	BACP10U0150T	.PANEL ASSY	121503 904949	1
160	232N4713-3	.BOX ASSY-HEADSET STOWAGE	121503 904949	1

MISSING ITEM NUMBERS NOT APPLICABLE

– ITEM NOT ILLUSTRATED

BOEING PROPRIETARY - Copyright © - Unpublished Work - See title page for details.

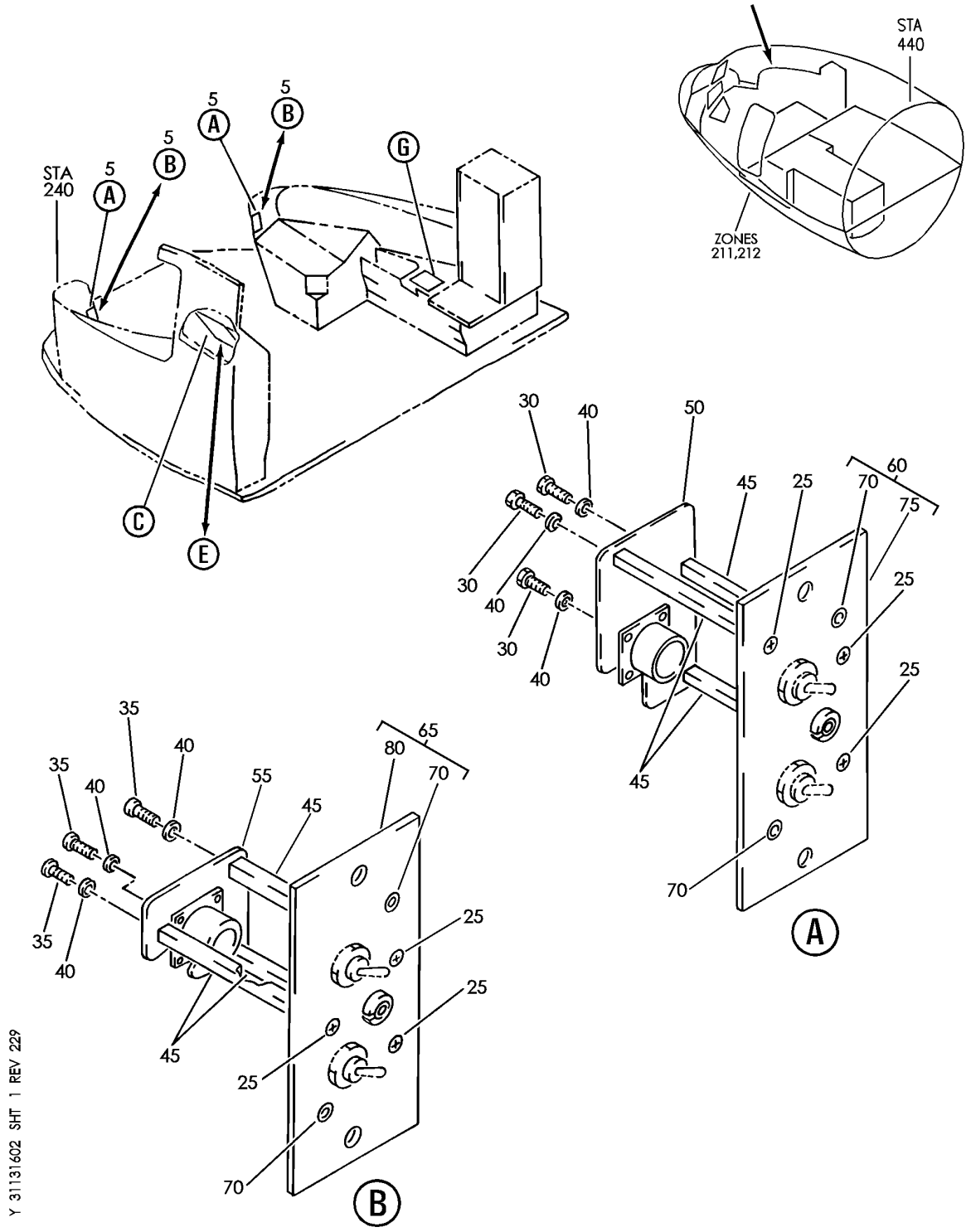

PANEL INSTL-P13, P14 AND P17 AUX (INDICATING/RECORDING ONLY)
FIGURE 2 (SHEET 1)

BOEING PROPRIETARY - Copyright © - Unpublished Work - See title page for details.

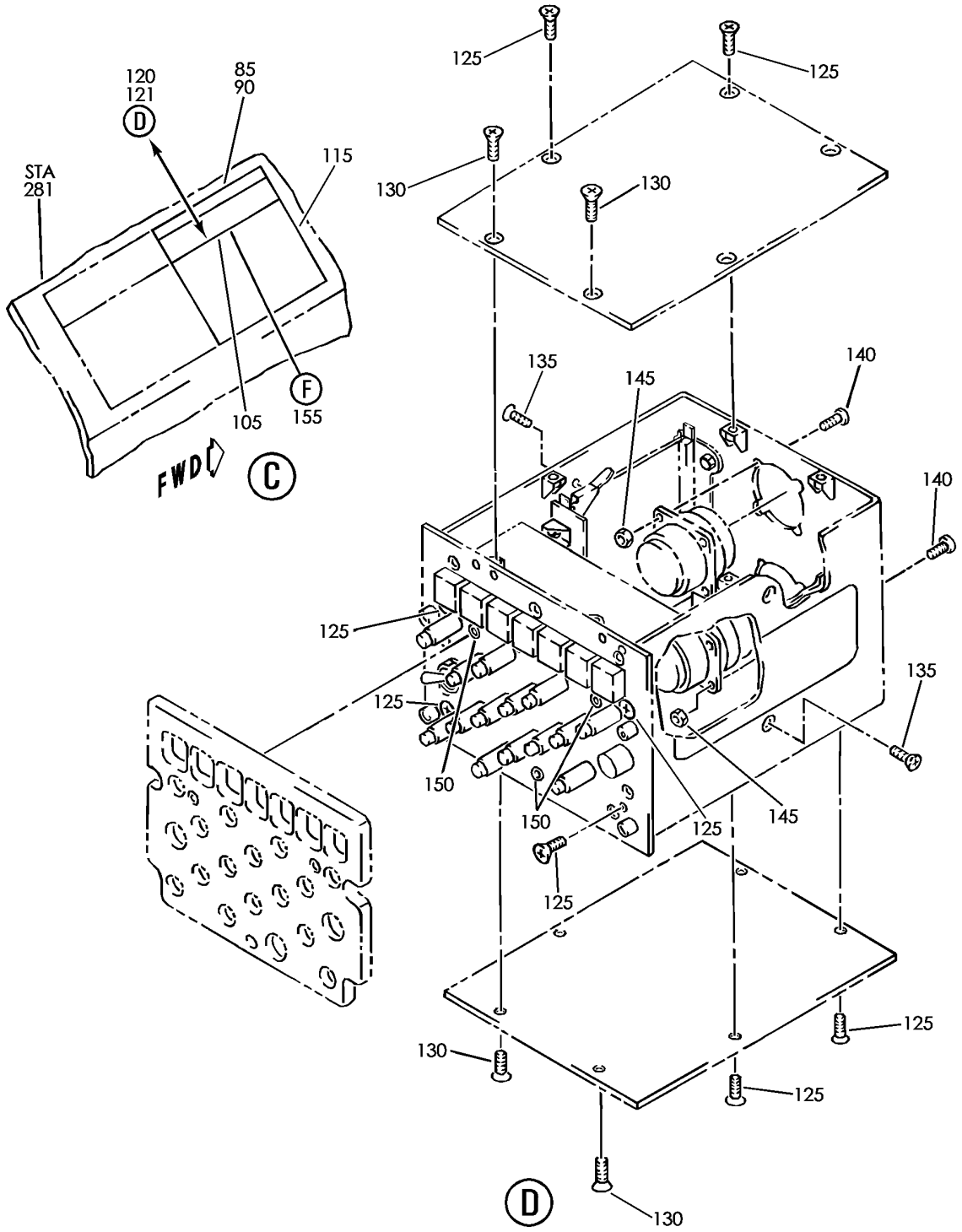

PANEL INSTL-P13, P14 AND P17 AUX (INDICATING/RECORDING ONLY)
FIGURE 2 (SHEET 2)

BOEING PROPRIETARY - Copyright © - Unpublished Work - See title page for details.

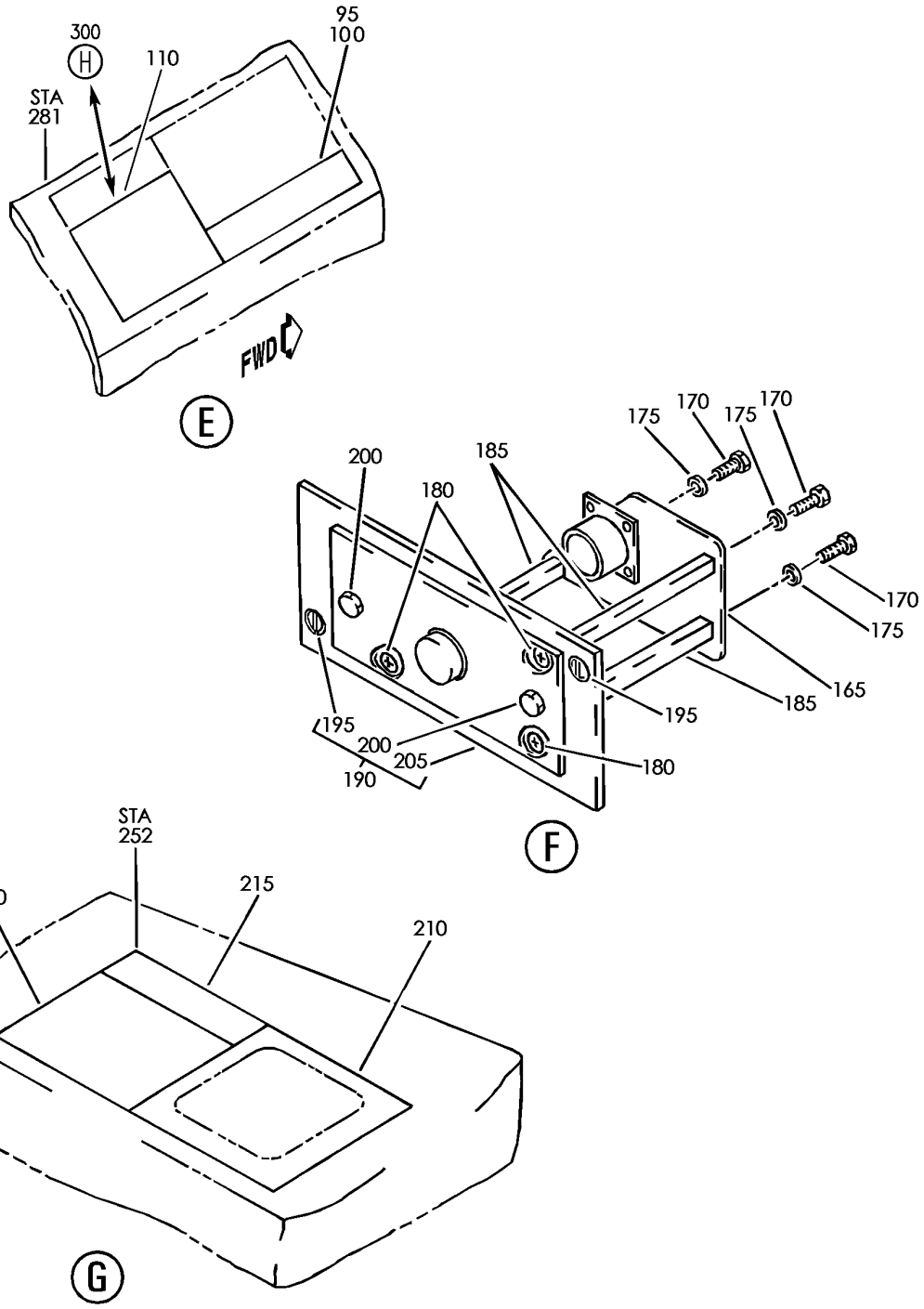

Y 31131602 SHT 3 REV 275

PANEL INSTL-P13, P14 AND P17 AUX (INDICATING/RECORDING ONLY)
FIGURE 2 (SHEET 3)

BOEING PROPRIETARY - Copyright © - Unpublished Work - See title page for details.

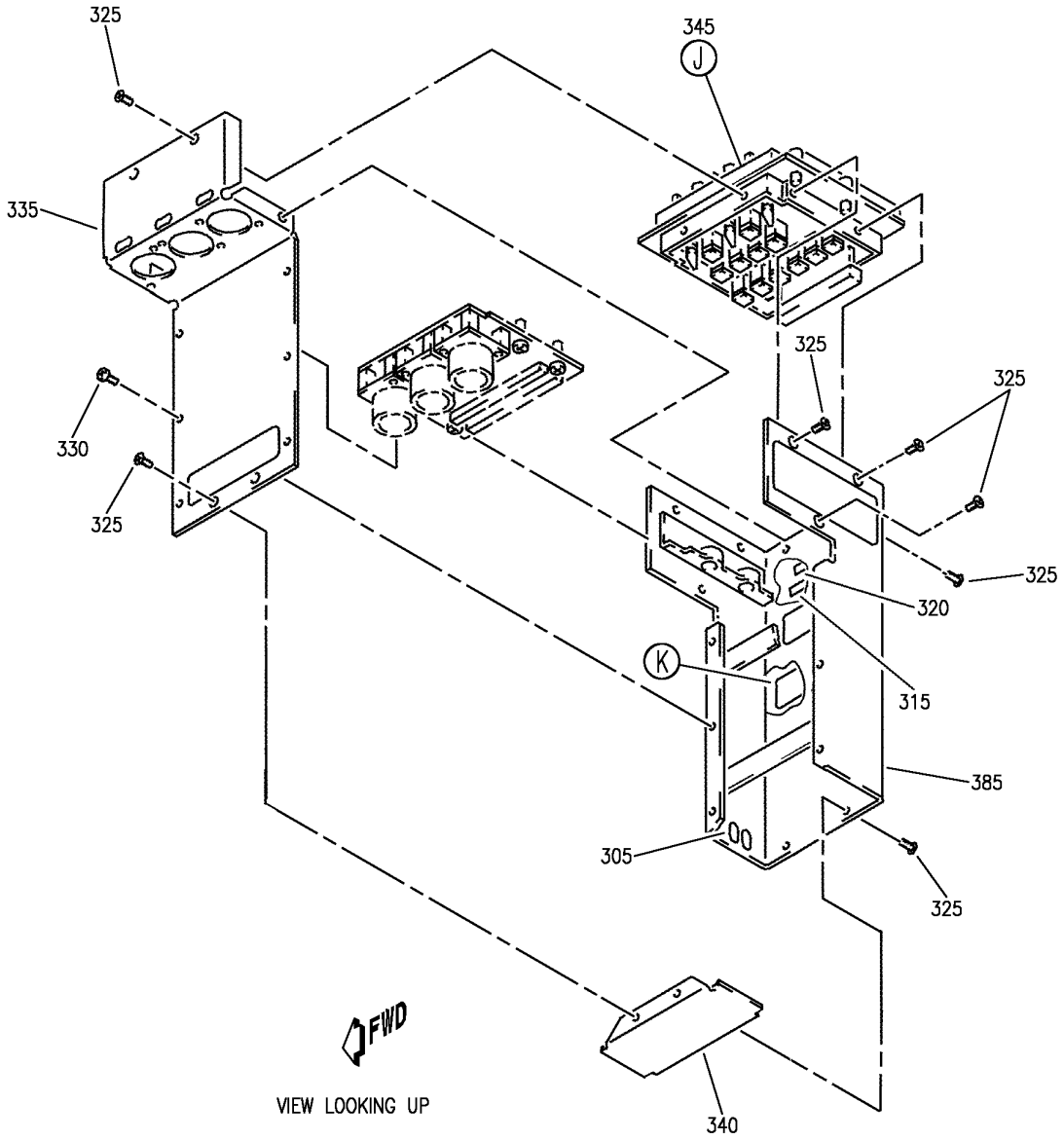

PANEL INSTL-P13, P14 AND P17 AUX (INDICATING/RECORDING ONLY)
FIGURE 2 (SHEET 4)

BOEING PROPRIETARY - Copyright © - Unpublished Work - See title page for details.

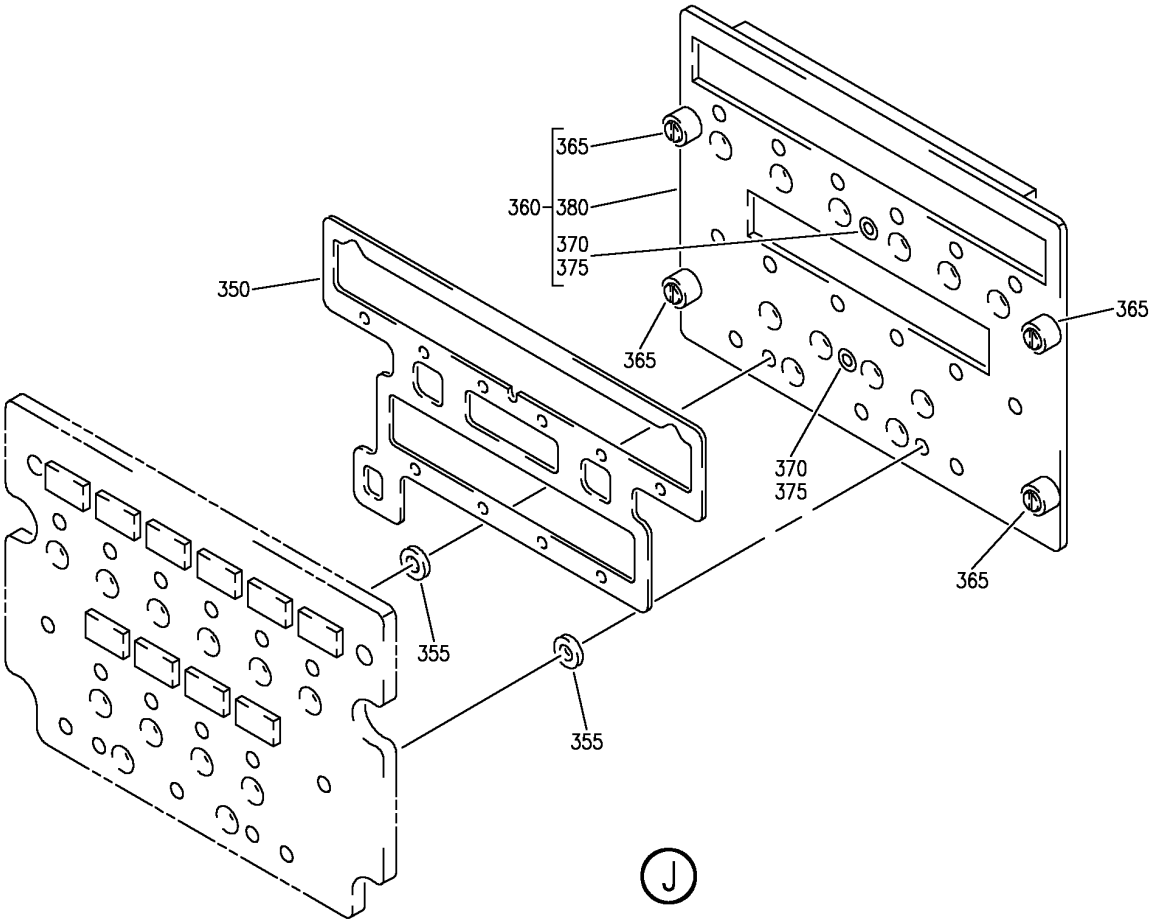

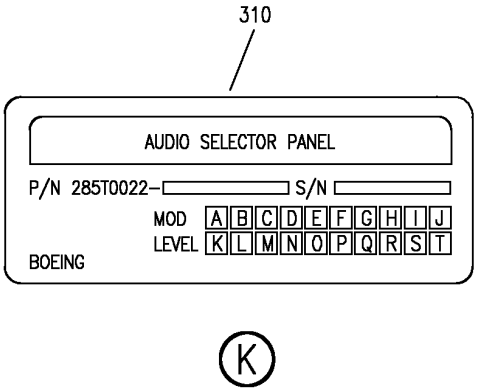

Y 31131602 SHT 5 REV 275

PANEL INSTL-P13, P14 AND P17 AUX (INDICATING/RECORDING ONLY)
FIGURE 2 (SHEET 5)

BOEING PROPRIETARY - Copyright © - Unpublished Work - See title page for details.

FIG ITEM	PART NUMBER	1 2 3 4 5 6 7 NOMENCLATURE	EFFECT FROM TO	UNITS PER ASSY
2		PANEL INSTL-P13, P14 AND P17 AUX (INDICATING/RECORDING ONLY)	002004 006100 107107 121503 904999	
- 1	233N7101-1	PANEL INSTL-P13,P14 AND P17 AUX (INDICATING/ RECORDING ONLY) VARIABLE DRAWING REF: 233N7101-5027 FOR NHA/OTHER SYS DET SEE: 25-10-00-05A	011100	RF
5	233T7210-301	.PANEL ASSY-AUX HEATER CONT SUPPLIER CODE: V89954 COMPONENT MAINT MANUAL REF: 21-45-01 FOR OTHER SYS DETAILS SEE: 21-45-01-02 21-45-02-03 33-13-60-02	011100	2
- 10	233T7210-9	..PANEL ASSY- SUPPLIER CODE: V89954 ELECTRICAL EQUIP NUMBER: M00901 M00902	011100	RF
25	NAS514P632-5	...SCREW	011100	3
30	NAS601-5P	...SCREW	011100	3
45	69B46200-5	...STANDOFF	011100	3
50	233T6200-207	...BRACKET-SPRT	011100	1
60	233T7210-10	...BASEPLATE ASSY- SUPPLIER CODE: V89954	011100	1
70	SF6G6CBB5D	....NUT SUPPLIER CODE: V12324 SPECIFICATION NUMBER: BACN10PA06-6	011100	2
75	233T7210-11	....BASEPLATE- SUPPLIER CODE: V89954	011100	1
85	BACP10U0225T	.PANEL	011100	1

MISSING ITEM NUMBERS NOT APPLICABLE

- ITEM NOT ILLUSTRATED

BOEING PROPRIETARY - Copyright © - Unpublished Work - See title page for details.

	FIG ITEM	PART NUMBER	1 2 3 4 5 6 7 NOMENCLATURE	EFFECT FROM TO	UNITS PER ASSY
	2				
R	105	5031-1-1	.PANEL ASSY-AUDIO SELECTOR	002004	RF
R			SUPPLIER CODE:	006100	
R			V30242	107107	
R			ELECTRICAL EQUIP NUMBER:	121503	
R			M00098	904999	
R			COMPONENT MAINT MANUAL REF:		
R			23-50-37		
R			FOR BREAKDOWN SEE:		
R			23-51-01-03		
	120	285T0022-22	.PANEL ASSY-AUDIO SELECTOR	011100	1
			SUPPLIER CODE:		
			V89954		
			ELECTRICAL EQUIP NUMBER:		
			M00098		
			COMPONENT MAINT MANUAL REF:		
			23-51-51		
			FOR OTHER SYS DETAILS SEE:		
			11-33-01-02		
			23-51-01-03		
			33-13-60-01		
	120	285T0022-28	.PANEL ASSY-AUDIO SELECTOR	011100	1
			SUPPLIER CODE:		
			V89954		
			ELECTRICAL EQUIP NUMBER:		
			M00098		
			COMPONENT MAINT MANUAL REF:		
			23-51-51		
			FOR OTHER SYS DETAILS SEE:		
			11-33-01-02		
			23-51-01-03		
			33-13-60-01		
	120	285T0022-38	.PANEL ASSY-AUDIO SELECTOR	011100	1
			SUPPLIER CODE:		
			V89954		
			ELECTRICAL EQUIP NUMBER:		
			M00098		
			COMPONENT MAINT MANUAL REF:		
			23-51-54		
			FOR OTHER SYS DETAILS SEE:		
			11-33-01-02		
			23-51-01-03		
			33-13-60-01		

MISSING ITEM NUMBERS NOT APPLICABLE

— ITEM NOT ILLUSTRATED

BOEING PROPRIETARY - Copyright © - Unpublished Work - See title page for details.

FIG ITEM	PART NUMBER	1 2 3 4 5 6 7 NOMENCLATURE	EFFECT FROM TO	UNITS PER ASSY
2				
121	285T0022-44	.PANEL ASSY-AUDIO SELECTOR	011100	1
		SUPPLIER CODE:		
		V89954		
		ELECTRICAL EQUIP NUMBER:		
		M00098		
		COMPONENT MAINT MANUAL REF:		
		23-51-54		
		FOR OTHER SYS DETAILS SEE:		
		11-33-01-02		
		23-51-01-03		
		33-13-60-01		
125	NAS514P440-5	..SCREW	011100	12
130	NAS514P632-5	..SCREW	011100	4
135	NAS514P440-4	..SCREW	011100	4
140	NAS1801-04-04	..SCREW	011100	8
145	BRH10A04	..NUT	011100	8
		SUPPLIER CODE:		
		V52828		
		SPECIFICATION NUMBER:		
		BACN10JC04		
		OPTIONAL PART:		
		NS202101-40		
		V80539		
		RMLH9075-40W		
		V72962		
		VN303A40		
		V92215		
		96-40		
		V80539		
		T6S440J		
		V11815		
		H10-04BAC		
		V15653		
150	SF6G6CBB5D	..NUT	011100	3
		SUPPLIER CODE:		
		V12324		
		SPECIFICATION NUMBER:		
		BACN10PA06-6		

MISSING ITEM NUMBERS NOT APPLICABLE

– ITEM NOT ILLUSTRATED

BOEING PROPRIETARY - Copyright © - Unpublished Work - See title page for details.

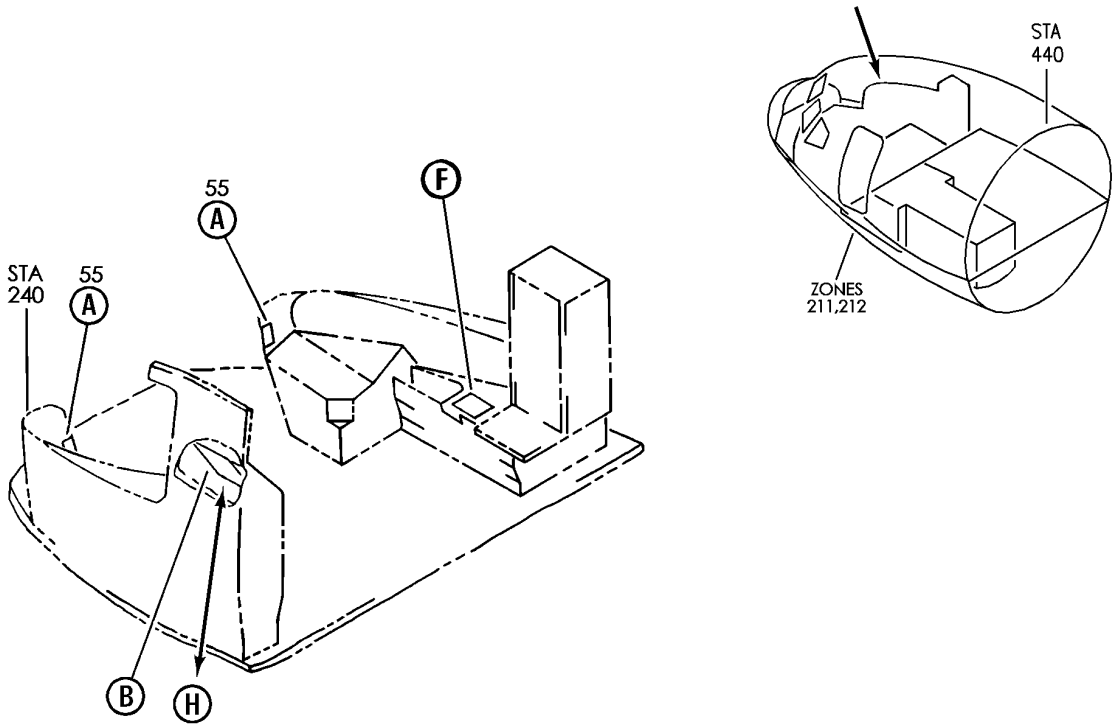

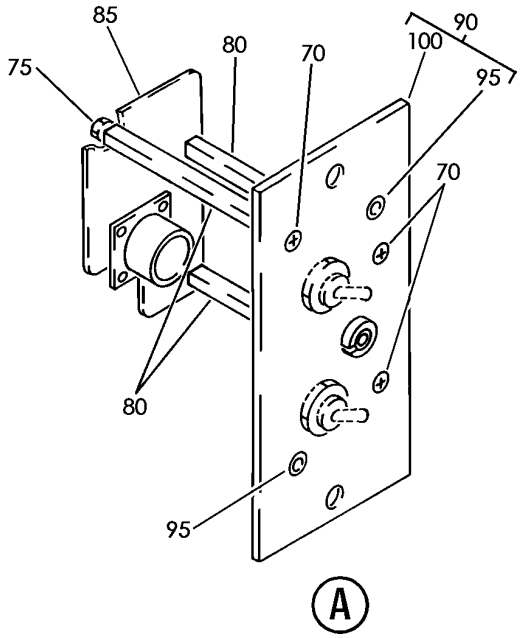

Y 31131603 SHT 1 REV 229

PANEL INSTL-AUX,P13,P14,P17 AUDIO SELECT,PTT,HTR CONT PTR,DISKETTE(INDICATING/ RECORDING SYS ONLY)
FIGURE 3 (SHEET 1)

BOEING PROPRIETARY - Copyright © - Unpublished Work - See title page for details.

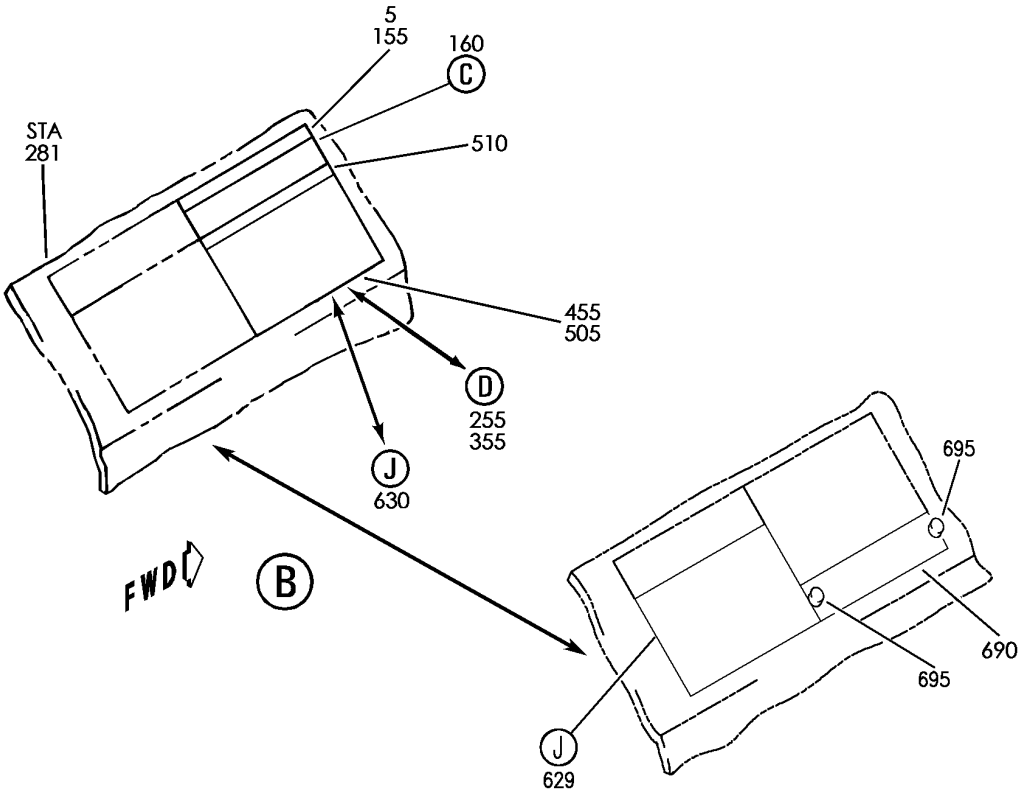

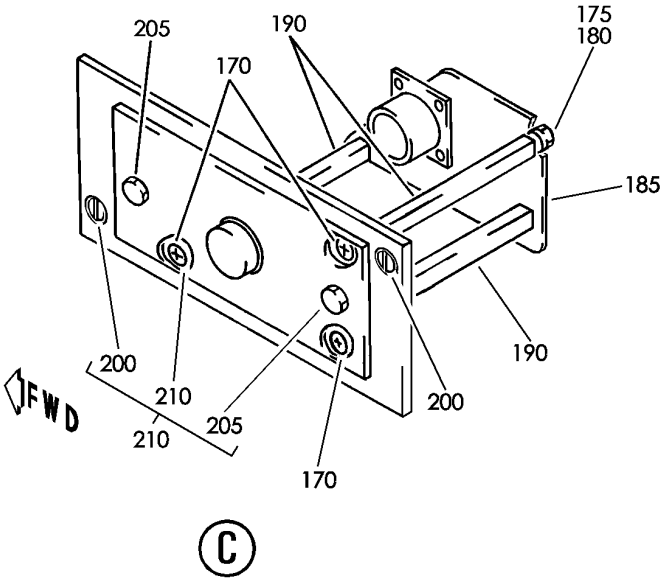

Y 31131603 SHT 2 REV 246

PANEL INSTL-AUX,P13,P14,P17 AUDIO SELECT,PTT,HTR CONT PTR,DISKETTE(INDICATING/ RECORDING SYS ONLY)
FIGURE 3 (SHEET 2)

BOEING PROPRIETARY - Copyright © - Unpublished Work - See title page for details.

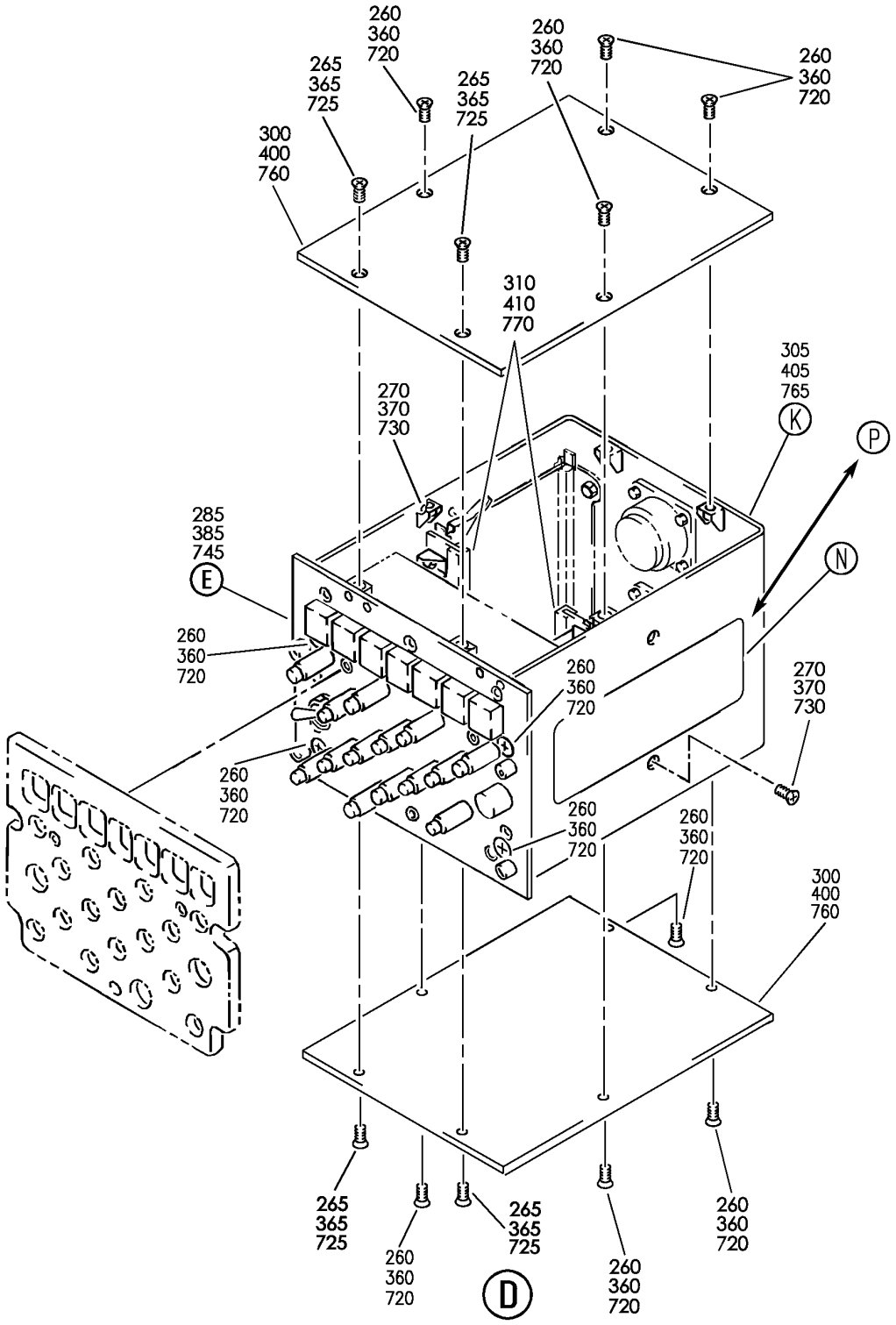

PANEL INSTL-AUX,P13,P14,P17 AUDIO SELECT,PTT,HTR CONT PTR,DISKETTE(INDICATING/ RECORDING SYS ONLY)
FIGURE 3 (SHEET 3)

BOEING PROPRIETARY - Copyright © - Unpublished Work - See title page for details.

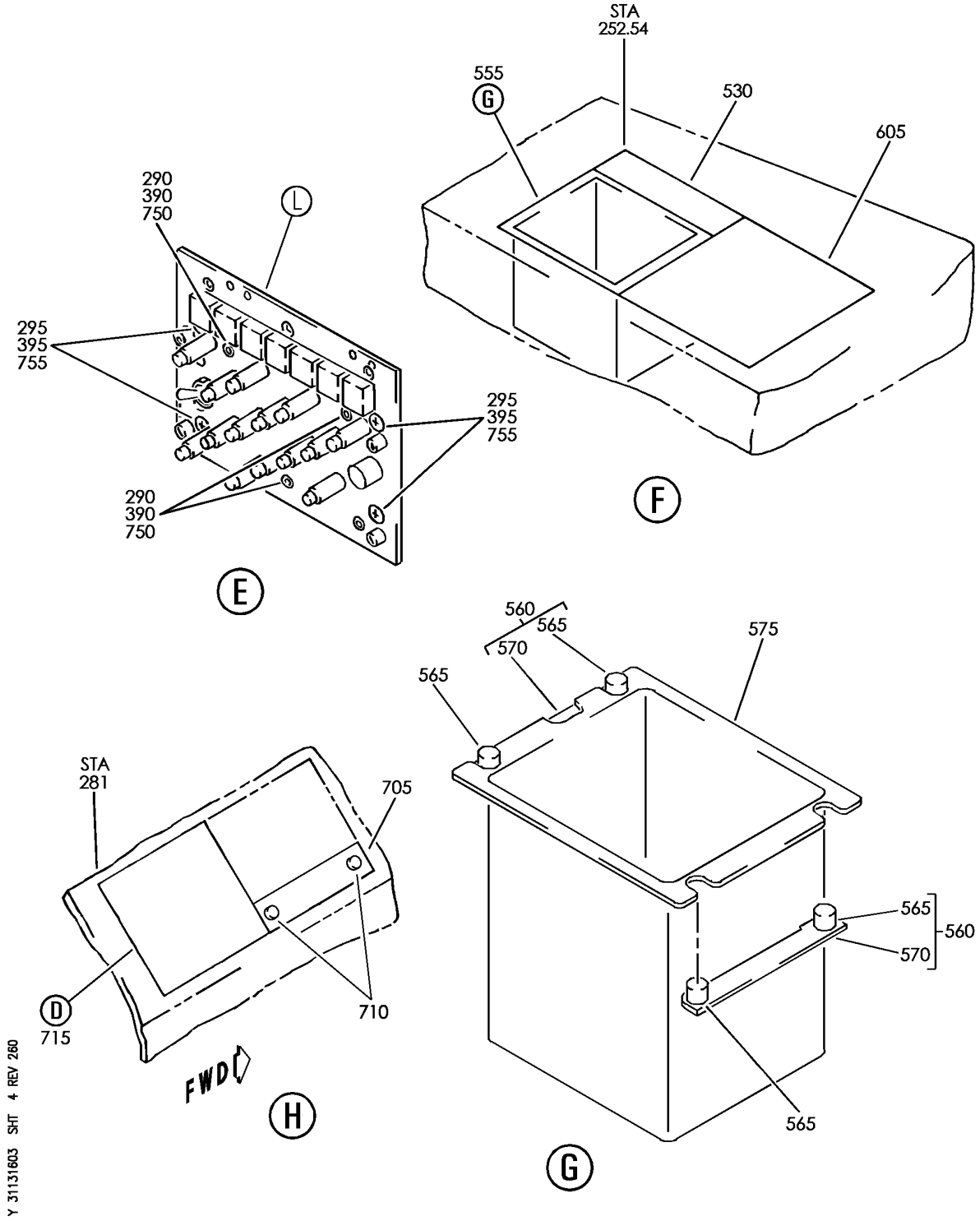

PANEL INSTL-AUX,P13,P14,P17 AUDIO SELECT,PTT,HTR CONT PTR,DISKETTE(INDICATING/ RECORDING SYS ONLY)
FIGURE 3 (SHEET 4)

BOEING PROPRIETARY - Copyright © - Unpublished Work - See title page for details.

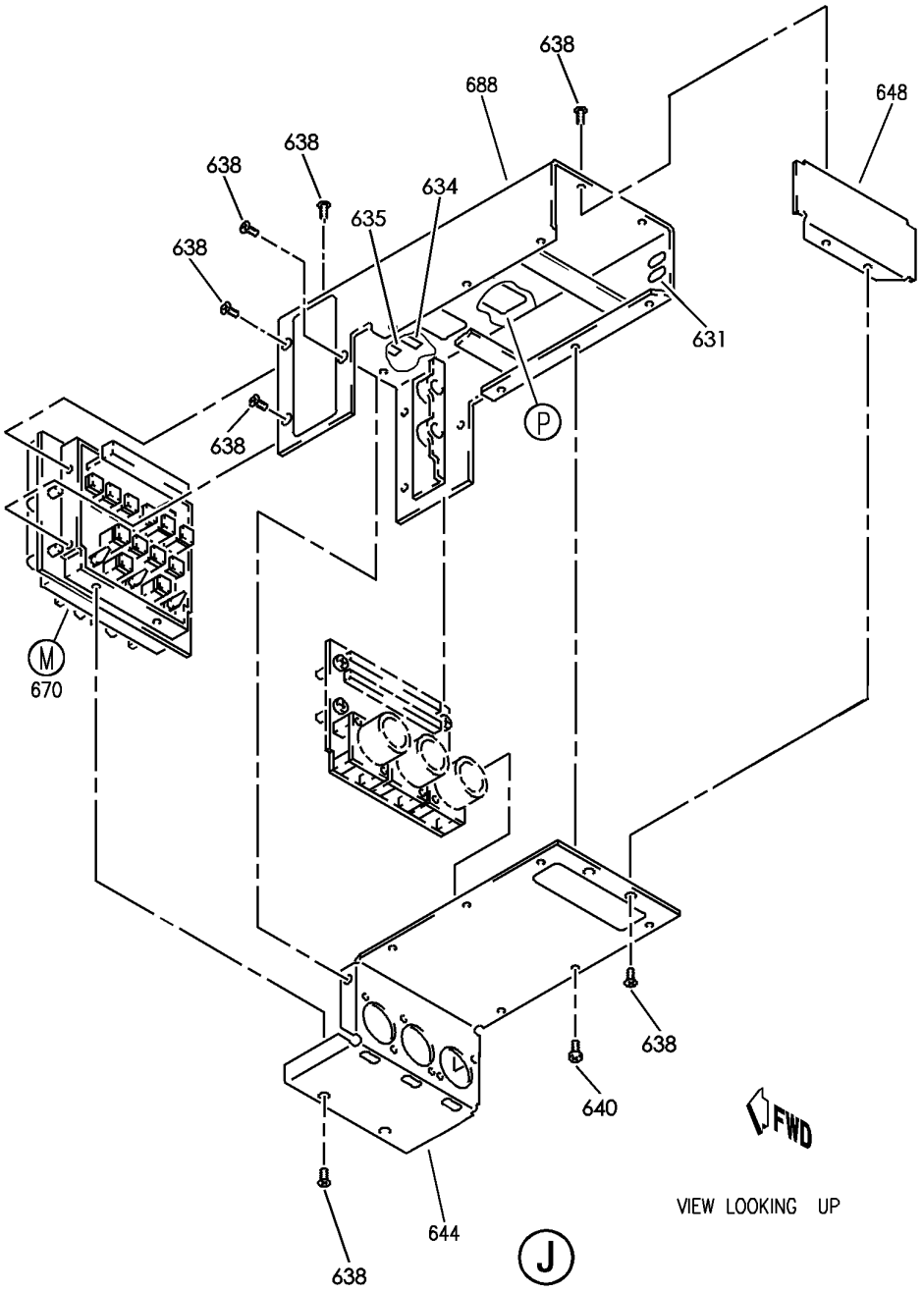

PANEL INSTL-AUX,P13,P14,P17 AUDIO SELECT,PTT,HTR CONT PTR,DISKETTE(INDICATING/ RECORDING SYS ONLY)
FIGURE 3 (SHEET 5)

BOEING PROPRIETARY - Copyright © - Unpublished Work - See title page for details.

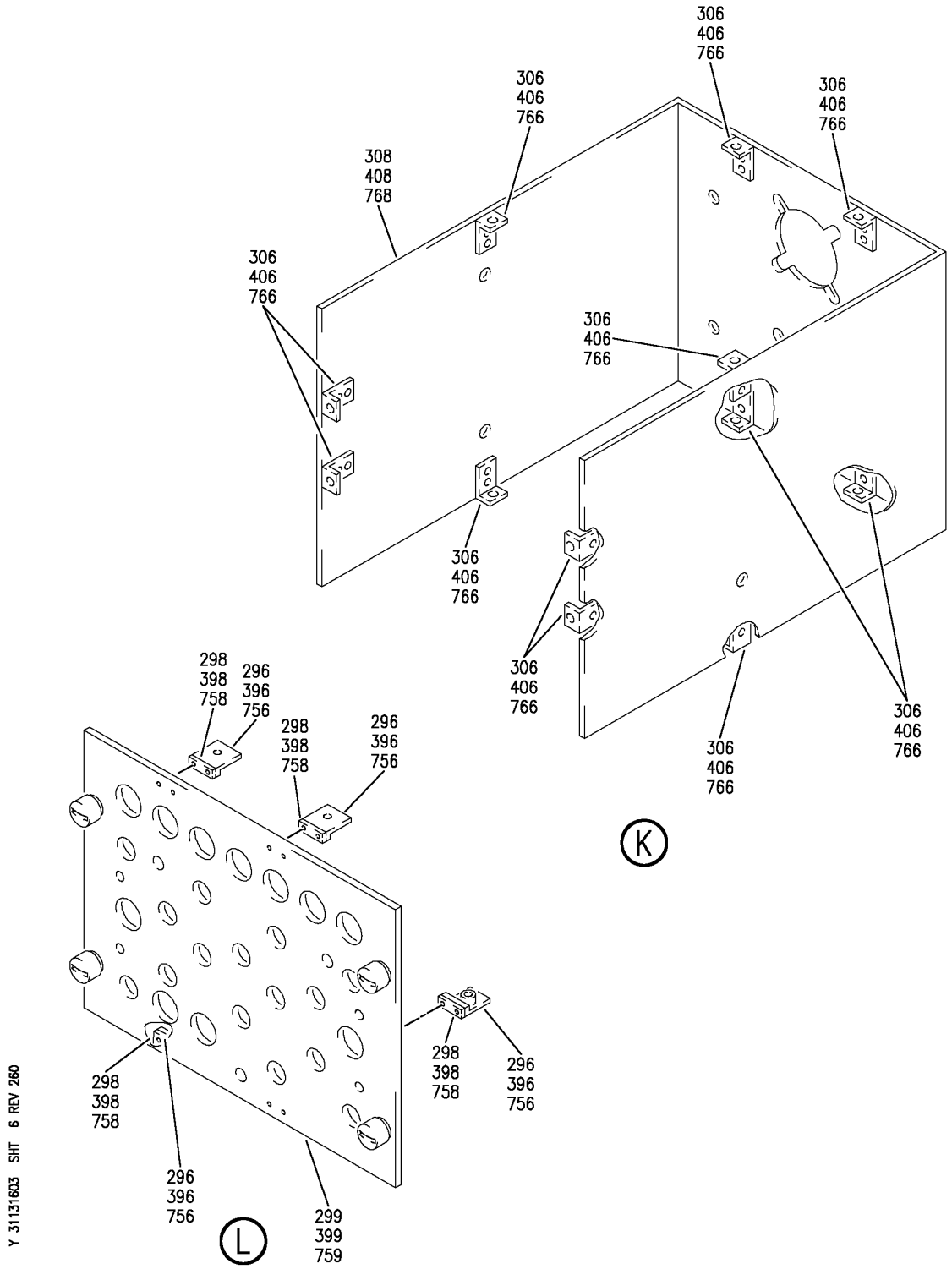

PANEL INSTL-AUX,P13,P14,P17 AUDIO SELECT,PTT,HTR CONT PTR,DISKETTE(INDICATING/ RECORDING SYS ONLY)
FIGURE 3 (SHEET 6)

BOEING PROPRIETARY - Copyright © - Unpublished Work - See title page for details.

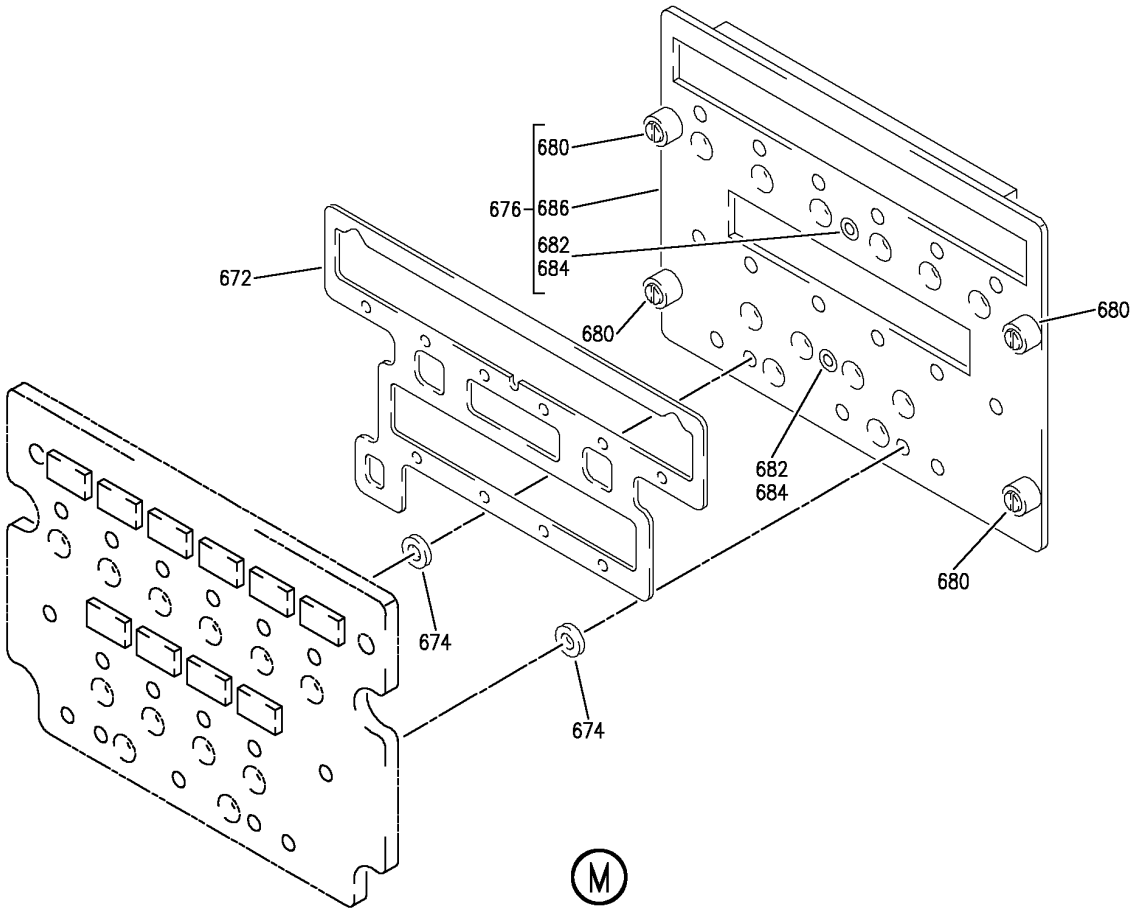

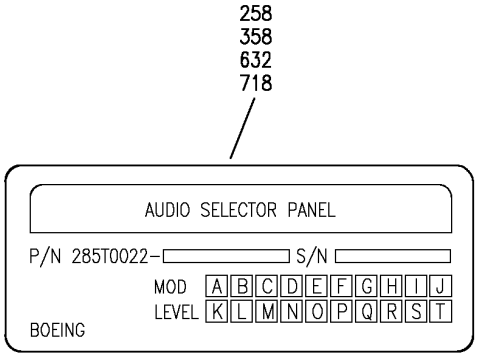

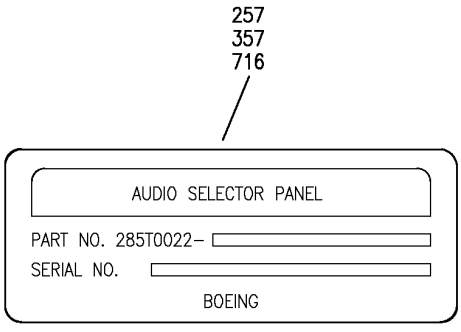

Y 31131603 SHT 7 REV 260

PANEL INSTL-AUX,P13,P14,P17 AUDIO SELECT,PTT,HTR CONT PTR,DISKETTE(INDICATING/ RECORDING SYS ONLY)
FIGURE 3 (SHEET 7)

BOEING PROPRIETARY - Copyright © - Unpublished Work - See title page for details.

FIG ITEM	PART NUMBER	1 2 3 4 5 6 7 NOMENCLATURE	EFFECT FROM TO	UNITS PER ASSY
3				
		PANEL INSTL-AUX,P13,P14,P17	101106	
		AUDIO SELECT,PTT,HTR CONT	108120	
		PTR,DISKETTE(INDICATING/	504903	
		RECORDING SYS ONLY)		
- 1	233N7103-1	PANEL INSTL-BLANK	101102	RF
		PRE-MODULE	504903	
		(INDICATING/RECORDING		
		SYSTEMS ONLY)		
		FOR NHA/OTHER SYS DET SEE:		
		25-10-00-15A		
- 1	MODREF8628	PANEL INSTL-BLANK	103106	1
		PRE-MODULE		
		(INDICATING/RECORDING		
		SYSTEMS ONLY)		
		MODULE NUMBER:		
		233N7103-1 REV A		
5	BACP10U0225T	.PANEL	101106	1
			504903	
- 50	233N7103-2	PANEL INSTL-AUX HEATER	101102	RF
		CONT (INDICATING/	108120	
		RECORDING SYSTEMS ONLY)	504903	
		FOR NHA/OTHER SYS DET SEE:		
		25-10-00-15		
- 50	MODREF8634	PANEL INSTL-AUX HEATER	103106	1
		CONT (INDICATING/		
		RECORDING SYSTEMS ONLY)		
		MODULE NUMBER:		
		233N7103-2 REV A		
		FOR OTHER SYS DETAILS SEE:		
		21-45-01-02		
		21-45-02-03		
		33-13-60-02		
55	233T7210-301	.PANEL ASSY-AUX HEATER CONT	101106	2
		SUPPLIER CODE:	108120	
		V89954	504903	
		ELECTRICAL EQUIP NUMBER:		
		M00901		
		M00902		
		COMPONENT MAINT MANUAL REF:		
		21-45-01		
		FOR OTHER SYS DETAILS SEE:		
		21-45-01-02		
		21-45-02-03		
		33-13-60-02		
- 60	233T7210-9	..PANEL ASSY-	101106	RF
		SUPPLIER CODE:	108120	
		V89954	504903	

MISSING ITEM NUMBERS NOT APPLICABLE

- ITEM NOT ILLUSTRATED

BOEING PROPRIETARY - Copyright © - Unpublished Work - See title page for details.

FIG ITEM	PART NUMBER	1 2 3 4 5 6 7 NOMENCLATURE	EFFECT FROM TO	UNITS PER ASSY
3				
70	NAS514P632-5	...SCREW	101106 108120 504903	3
75	NAS601-5P	...SCREW	101106 108120 504903	3
80	69B46200-5	...STANDOFF	101106 108120 504903	3
85	233T6200-207	...BRACKET-SPRT	101106 108120 504903	1
90	233T7210-10	...BASEPLATE ASSY- SUPPLIER CODE: V89954	101106 108120 504903	1
95	SF6G6CBB5D	....NUT SUPPLIER CODE: V12324 SPECIFICATION NUMBER: BACN10PA06-6	101106 108120 504903	2
100	233T7210-11	....BASEPLATE- SUPPLIER CODE: V89954	101106 108120 504903	1
- 250	233N7103-18	PANEL INSTL-AUDIO SELECT PRE-MODULE (INDICATING/RECORDING SYSTEMS ONLY) FOR NHA/OTHER SYS DET SEE: 25-10-00-15B	101102	RF
255	285T0022-44	.PANEL ASSY-AUDIO SELECTOR SUPPLIER CODE: V89954 ELECTRICAL EQUIP NUMBER: M00098 COMPONENT MAINT MANUAL REF: 23-51-54 FOR OTHER SYS DETAILS SEE: 23-51-01-06 33-13-60-01	101102	1
255	285T0022-38	.PANEL ASSY-AUDIO SELECTOR SUPPLIER CODE: V89954 ELECTRICAL EQUIP NUMBER: M00098 COMPONENT MAINT MANUAL REF: 23-51-54 FOR OTHER SYS DETAILS SEE: 23-51-01-06 33-13-60-01	101102	1

MISSING ITEM NUMBERS NOT APPLICABLE

- ITEM NOT ILLUSTRATED

BOEING PROPRIETARY - Copyright © - Unpublished Work - See title page for details.

FIG ITEM	PART NUMBER	1 2 3 4 5 6 7 NOMENCLATURE	EFFECT FROM TO	UNITS PER ASSY
3				
255	285T0022-28	.PANEL ASSY-AUDIO SELECTOR SUPPLIER CODE: V89954 ELECTRICAL EQUIP NUMBER: M00098 COMPONENT MAINT MANUAL REF: 23-51-51 FOR OTHER SYS DETAILS SEE: 23-51-01-06 33-13-60-01	101102	1
257	BAC27TEX1992	..MARKER-ALUMINUM FOIL QUALIFIED OPTIONAL DATA: BAC27TEX1992 OPTIONAL TO BAC27TEX4053 WHEN USED WITH ASSOCIATED ITEMS USED ON: 285T0022-38 285T0022-41 285T0022-44	101102	1
257	BAC27TEX1992	..MARKER-ALUMINUM FOIL USED ON: 285T0022-28 285T0022-31	101102	1
258	BAC27TEX4053	..MARKER-ALUMINUM FOIL SUPPLIER CODE: V89954 QUALIFIED OPTIONAL DATA: BAC27TEX1992 OPTIONAL TO BAC27TEX4053 WHEN USED WITH ASSOCIATED ITEMS USED ON: 285T0022-38 285T0022-41 285T0022-44	101102	1
260	NAS514P440-5	..SCREW	101102	12
265	NAS514P632-5	..SCREW	101102	4
270	NAS514P440-4	..SCREW	101102	4
285	285T0179-43	..PANEL ASSY-FRONT SUPPLIER CODE: V89954	101102	1
290	SF6G6CBB5D	...NUT SUPPLIER CODE: V12324 SPECIFICATION NUMBER: BACN10PA06-6	101102	3

MISSING ITEM NUMBERS NOT APPLICABLE

– ITEM NOT ILLUSTRATED

BOEING PROPRIETARY - Copyright © - Unpublished Work - See title page for details.

FIG ITEM	PART NUMBER	1 2 3 4 5 6 7 NOMENCLATURE	EFFECT FROM TO	UNITS PER ASSY
3				
295	D1400-6A1	...STUD ASSY SUPPLIER CODE: V08524 SPECIFICATION NUMBER: BACS21DD1	101102	4
296	F19716-06	...NUT-ANCHOR SUPPLIER CODE: V15653 ATTACHING PARTS	101102	4
- 297	BACR15BA2AD	...RIVET- SIZE DETERMINED ON INSTL. -------*-------	101102	8
298	285T0179-45	...SPACER- SUPPLIER CODE: V89954	101102	4
299	285T0179-44	...PANEL- SUPPLIER CODE: V89954	101102	1
300	285T0179-47	..PANEL- SUPPLIER CODE: V89954	101102	2
305	285T0179-48	..CHASSIS ASSY- SUPPLIER CODE: V89954	101102	1
306	F22A27M22-40	...NUT-ANCHOR SUPPLIER CODE: V0217B OPTIONAL PART: A27M88-04 V62554	101102	12
306	A27M88-04	...NUT-ANCHOR SUPPLIER CODE: V62554 OPTIONAL PART: F22A27M22-40 V0217B ATTACHING PARTS	101102	12
- 307	BACR15BA2AD	...RIVET- SIZE DETERMINED ON INSTL. -------*-------	101102	24
308	285T0179-24	...CHASSIS- SUPPLIER CODE: V89954	101102	1
310	BACG20ZA350	..GROMMET- OPTIONAL PART: BACG20ZA000350 USED ON: 285T0022-41 285T0022-44	101102	2

MISSING ITEM NUMBERS NOT APPLICABLE

- ITEM NOT ILLUSTRATED

BOEING PROPRIETARY - Copyright © - Unpublished Work - See title page for details.

	FIG ITEM	PART NUMBER	1 2 3 4 5 6 7 NOMENCLATURE	EFFECT FROM TO	UNITS PER ASSY
	3				
	310	BACG20ZA350	..GROMMET-	101102	2
			USED ON:		
			285T0022-28		
			285T0022-31		
			285T0022-38		
	310	BACG20ZA000350	..GROMMET-	101102	2
			OPTIONAL PART:		
			BACG20ZA350		
			USED ON:		
			285T0022-41		
			285T0022-44		
	- 450	233N7103-22	PANEL INSTL-AUDIO SELECT	504903	RF
			PRE-MODULE		
			(INDICATING/RECORDING		
			SYSTEMS ONLY)		
			FOR NHA/OTHER SYS DET SEE:		
			25-10-00-15B		
R	455	5051-1-5	.PANEL ASSY-AUDIO SELECTOR	504903	RF
R			SUPPLIER CODE:		
R			V30242		
R			ELECTRICAL EQUIP NUMBER:		
R			M00098		
R			COMPONENT MAINT MANUAL REF:		
R			23-50-31		
R			FOR BREAKDOWN SEE:		
R			23-51-01-06		
	- 525	233N7103-19	PANEL INSTL-BLANK	504903	RF
			PRE-MODULE		
			(INDICATING/RECORDING		
			SYSTEMS ONLY)		
			FOR NHA/OTHER SYS DET SEE:		
			25-10-00-15B		
	530	BACP10U0150T	.PANEL ASSY	504903	1
	- 550	233N7103-20	PANEL INSTL-DISKETTE	504903	RF
			STOWAGE PRE-MODULE		
			(INDICATING/RECORDING		
			SYSTEMS ONLY)		
			FOR NHA/OTHER SYS DET SEE:		
			25-10-00-15B		
	555	232N4713-3	.BOX ASSY-STOWAGE	504903	1
	560	232N4721-1	..PLATE ASSY-SPRT	504903	2
	565	BACS21DD1B	...STUD ASSY	504903	2
			SUPPLIER CODE:		
			V08524		
			SPECIFICATION NUMBER:		
			BACS21DD1B		

MISSING ITEM NUMBERS NOT APPLICABLE

– ITEM NOT ILLUSTRATED

BOEING PROPRIETARY - Copyright © - Unpublished Work - See title page for details.

	FIG ITEM	PART NUMBER	1 2 3 4 5 6 7 NOMENCLATURE	EFFECT FROM TO	UNITS PER ASSY
	3				
	570	232N4721-2	...PLATE- MANUFACTURED FROM: STOCK .063 X .5 X 4.0 CLAD 2024-T3, SH PER QQ-A-250/5	504903	1
	575	232N4713-4	..BOX	504903	1
	- 600	233N7103-21	PANEL INSTL-PRINTER PRE-MODULE (INDICATING/RECORDING SYSTEMS ONLY) FOR NHA/OTHER SYS DET SEE: 25-10-00-15B	504903	RF
R	605	RDAC1203-7B3	.PRINTER-ACARS SUPPLIER CODE: V0FF57 ELECTRICAL EQUIP NUMBER: M10386 COMPONENT MAINT MANUAL REF: 23-23-02 QUALIFIED I/W DATA: THE -7B3 MAY REPLACE BUT NOT BE REPLACED BY THE -5B3 FOR BREAKDOWN SEE: 23-22-03-02	504903	RF
	- 625	MODREF22325	PANEL INSTL- (INDICATING/RECORDING SYSTEMS ONLY) MODULE NUMBER: 233N7103-17 REV B FOR OTHER SYS DETAILS SEE: 11-33-01-03 23-51-01-06 33-13-60-01	103106	1
	630	285T0022-51	.PANEL ASSY-AUDIO SELECTOR SUPPLIER CODE: V89954 ELECTRICAL EQUIP NUMBER: M00098 COMPONENT MAINT MANUAL REF: 23-51-05 FOR OTHER SYS DETAILS SEE: 11-33-01-03 23-51-01-06 33-13-60-01	103106	1
	631	BAC27TEX3349	..DECALSET	103106	1
	632	BAC27TEX4053	..MARKER-ALUMINUM FOIL SUPPLIER CODE: V89954	103106	1

MISSING ITEM NUMBERS NOT APPLICABLE

- ITEM NOT ILLUSTRATED

BOEING PROPRIETARY - Copyright © - Unpublished Work - See title page for details.

FIG ITEM	PART NUMBER	1 2 3 4 5 6 7 NOMENCLATURE	EFFECT FROM TO	UNITS PER ASSY
3				
634	S906-10207-2	..LABEL	103106	3
635	S906-10207-4	..LABEL	103106	1
638	MS24693C2	..SCREW	103106	14
640	MS51957-13	..SCREW	103106	6
644	285T0142-5	..COVER-	103106	1
		SUPPLIER CODE:		
		V89954		
648	285T0142-7	..COVER-	103106	1
		SUPPLIER CODE:		
		V89954		
670	285T0148-1	..PANEL ASSY-FRONT	103106	RF
		SUPPLIER CODE:		
		V89954		
		QUALIFIED OPTIONAL DATA:		
		285T0148-1 OPTIONAL TO		
		285T0148-2 USED WITH		
		ASSOCIATED PARTS		
670	285T0148-2	..PANEL ASSY-FRONT	103106	RF
		SUPPLIER CODE:		
		V89954		
		QUALIFIED OPTIONAL DATA:		
		285T0148-1 OPTIONAL TO		
		285T0148-2 USED WITH		
		ASSOCIATED PARTS		
672	285T0149-1	...GASKET-	103106	1
		SUPPLIER CODE:		
		V89954		
		USED ON:		
		285T0148-1		
672	285T0149-3	...GASKET-	103106	1
		SUPPLIER CODE:		
		V89954		
		USED ON:		
		285T0148-2		
674	285T0149-2	...GASKET-	103106	2
		SUPPLIER CODE:		
		V89954		
		USED ON:		
		285T0148-1		
674	285T0149-4	...GASKET-	103106	2
		SUPPLIER CODE:		
		V89954		
		USED ON:		
		285T0148-2		
676	285T0142-1	...PANEL ASSY-	103106	1
		SUPPLIER CODE:		
		V89954		
		USED ON:		
		285T0148-1		

MISSING ITEM NUMBERS NOT APPLICABLE

– ITEM NOT ILLUSTRATED

BOEING PROPRIETARY - Copyright © - Unpublished Work - See title page for details.

FIG ITEM	PART NUMBER	1 2 3 4 5 6 7 NOMENCLATURE	EFFECT FROM TO	UNITS PER ASSY
3				
676	285T0142-23	...PANEL ASSY- SUPPLIER CODE: V89954 USED ON: 285T0148-2	103106	1
680	9-125-0502-105	....STUD ASSY- SUPPLIER CODE: V12324	103106	4
682	SF10F4CBB4D	....NUT-PRESS SUPPLIER CODE: V12324 OPTIONAL PART: SOS440-8 V46384	103106	2
684	SOS440-8	....SPACER-THREADED SUPPLIER CODE: V46384 OPTIONAL PART: SF10F4CBB4D V12324	103106	2
686	285T0142-2	....PANEL- SUPPLIER CODE: V89954 USED ON: 285T0142-1	103106	1
686	285T0142-24	....PANEL- SUPPLIER CODE: V89954 USED ON: 285T0142-23	103106	1
688	285T0142-3	..ENCLOSURE ASSY- SUPPLIER CODE: V89954	103106	1
- 700	233N7103-39	PANEL INSTL-AUDIO SELECT (INDICATING/RECORDING SYSTEMS ONLY) FOR NHA/OTHER SYS DET SEE: 25-10-00-15B	108120	RF
705	233N3250-70	.PANEL ASSY	108120	1
710	PFSC35-38ASEMB	..STUD ASSY SUPPLIER CODE: V72794 SPECIFICATION NUMBER: BACS21DX1B	108120	2

MISSING ITEM NUMBERS NOT APPLICABLE

- ITEM NOT ILLUSTRATED

BOEING PROPRIETARY - Copyright © - Unpublished Work - See title page for details.

FIG ITEM	PART NUMBER	1 2 3 4 5 6 7 NOMENCLATURE	EFFECT FROM TO	UNITS PER ASSY
3				
715	285T0022-44	.PANEL ASSY-AUDIO SELECTOR SUPPLIER CODE: V89954 ELECTRICAL EQUIP NUMBER: M00098 COMPONENT MAINT MANUAL REF: 23-51-54 FOR OTHER SYS DETAILS SEE: 23-51-01-06 33-13-60-01	108120	1
715	285T0022-38	.PANEL ASSY-AUDIO SELECTOR SUPPLIER CODE: V89954 ELECTRICAL EQUIP NUMBER: M00098 COMPONENT MAINT MANUAL REF: 23-51-54 FOR OTHER SYS DETAILS SEE: 23-51-01-06 33-13-60-01	108120	1
715	285T0022-28	.PANEL ASSY-AUDIO SELECTOR SUPPLIER CODE: V89954 ELECTRICAL EQUIP NUMBER: M00098 COMPONENT MAINT MANUAL REF: 23-51-51 FOR OTHER SYS DETAILS SEE: 23-51-01-06 33-13-60-01	108120	1
716	BAC27TEX1992	..MARKER-ALUMINUM FOIL QUALIFIED OPTIONAL DATA: BAC27TEX4053 OPT TO BAC27TEX1992 WHEN USED WITH ASSOCIATED PARTS USED ON: 285T0022-43 285T0022-37 285T0022-44 285T0022-38 285T0022-45 285T0022-39	108120	1
716	BAC27TEX1992	..MARKER-ALUMINUM FOIL USED ON: 285T0022-27 285T0022-28 285T0022-29	108120	1

MISSING ITEM NUMBERS NOT APPLICABLE

– ITEM NOT ILLUSTRATED

BOEING PROPRIETARY - Copyright © - Unpublished Work - See title page for details.

FIG ITEM	PART NUMBER	1 2 3 4 5 6 7 NOMENCLATURE	EFFECT FROM TO	UNITS PER ASSY
3				
718	BAC27TEX4053	..MARKER-ALUMINUM FOIL SUPPLIER CODE: V89954 QUALIFIED OPTIONAL DATA: BAC27TEX4053 OPT TO BAC27TEX1992 WHEN USED WITH ASSOCIATED PARTS USED ON: 285T0022-43 285T0022-37 285T0022-44 285T0022-38 285T0022-45 285T0022-39	108120	1
720	NAS514P440-5	..SCREW	108120	12
725	NAS514P632-5	..SCREW	108120	4
730	NAS514P440-4	..SCREW	108120	4
745	285T0179-43	..PANEL ASSY-FRONT SUPPLIER CODE: V89954	108120	1
750	SF6G6CBB5D	...NUT SUPPLIER CODE: V12324 SPECIFICATION NUMBER: BACN10PA06-6	108120	3
755	D1400-6A1	...STUD ASSY SUPPLIER CODE: V08524 SPECIFICATION NUMBER: BACS21DD1	108120	4
756	F19716-06	...NUT-ANCHOR SUPPLIER CODE: V15653 ATTACHING PARTS	108120	4
- 757	BACR15BA2AD	...RIVET- SIZE DETERMINED ON INSTL. -------*-------	108120	8
758	285T0179-45	...SPACER- SUPPLIER CODE: V89954	108120	4
759	285T0179-44	...PANEL- SUPPLIER CODE: V89954	108120	1
760	285T0179-47	..PANEL- SUPPLIER CODE: V89954	108120	2
765	285T0179-48	..CHASSIS ASSY- SUPPLIER CODE: V89954	108120	1

MISSING ITEM NUMBERS NOT APPLICABLE

- ITEM NOT ILLUSTRATED

BOEING PROPRIETARY - Copyright © - Unpublished Work - See title page for details.

FIG ITEM	PART NUMBER	1 2 3 4 5 6 7 NOMENCLATURE	EFFECT FROM TO	UNITS PER ASSY
3				
766	F22A27M22-40	...NUT-ANCHOR SUPPLIER CODE: V0217B OPTIONAL PART: A27M88-04 V62554	108120	12
766	A27M88-04	...NUT-ANCHOR SUPPLIER CODE: V62554 OPTIONAL PART: F22A27M22-40 V0217B ATTACHING PARTS	108120	12
- 767	BACR15BA2AD	...RIVET- SIZE DETERMINED ON INSTL. -------*-------	108120	24
768	285T0179-24	...CHASSIS- SUPPLIER CODE: V89954	108120	1
770	BACG20ZA350	..GROMMET- OPTIONAL PART: BACG20ZA000350 USED ON: 285T0022-43 285T0022-44 285T0022-45	108120	2
770	BACG20ZA350	..GROMMET- USED ON: 285T0022-37 285T0022-27 285T0022-38 285T0022-28 285T0022-39 285T0022-29	108120	2
770	BACG20ZA000350	..GROMMET- OPTIONAL PART: BACG20ZA350 USED ON: 285T0022-43 285T0022-44 285T0022-45	108120	2

MISSING ITEM NUMBERS NOT APPLICABLE

- ITEM NOT ILLUSTRATED

BOEING PROPRIETARY - Copyright © - Unpublished Work - See title page for details.

PILOTS RIGHTSIDE INSTRUMENT PANEL

BOEING PROPRIETARY - Copyright © - Unpublished Work - See title page for details.

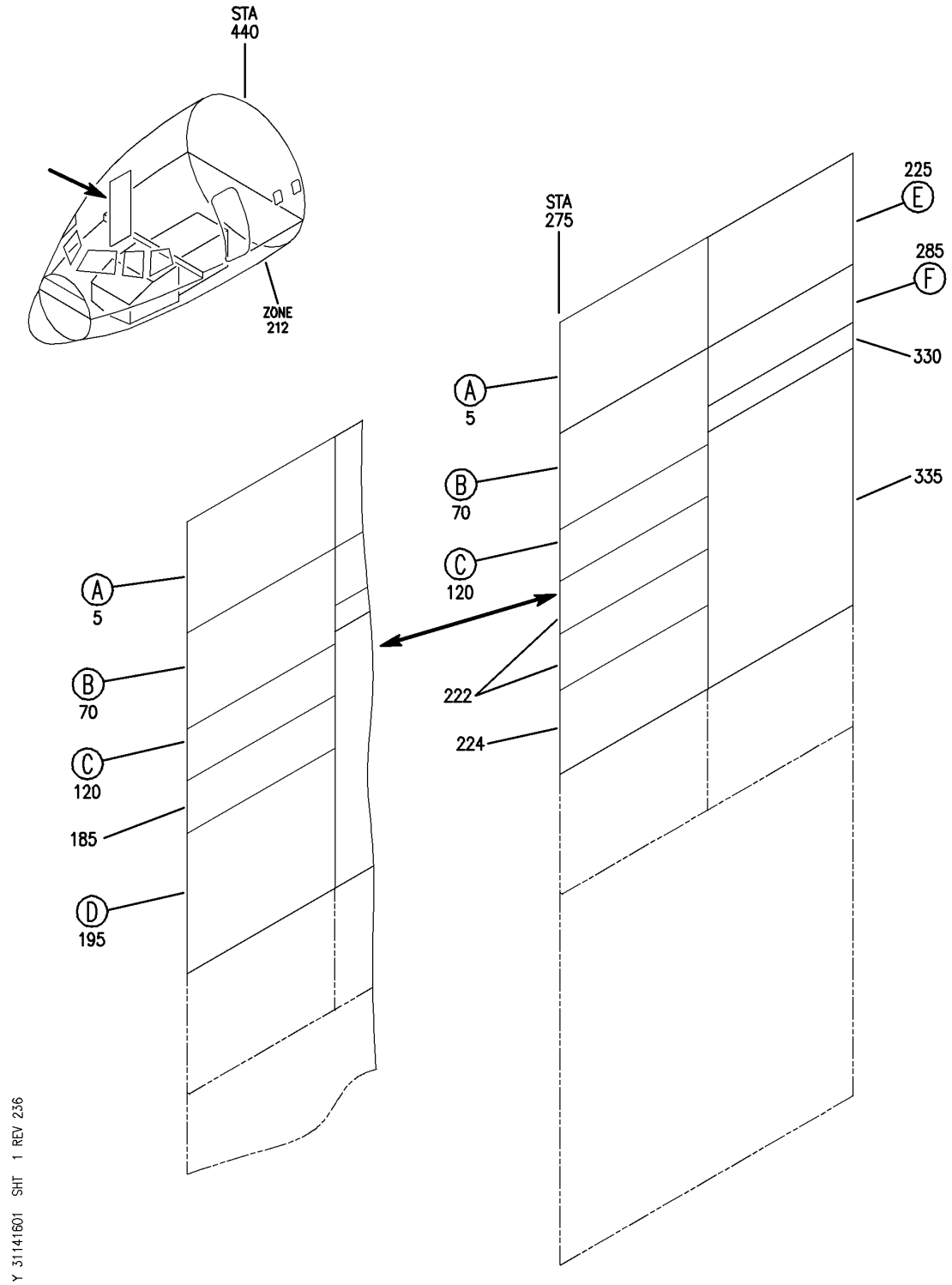

PANEL INSTL-P61 R SIDEWALL (PILOTS' RIGHT SIDE INSTRUMENT PANEL ONLY)
FIGURE 1 (SHEET 1)

BOEING PROPRIETARY - Copyright © - Unpublished Work - See title page for details.

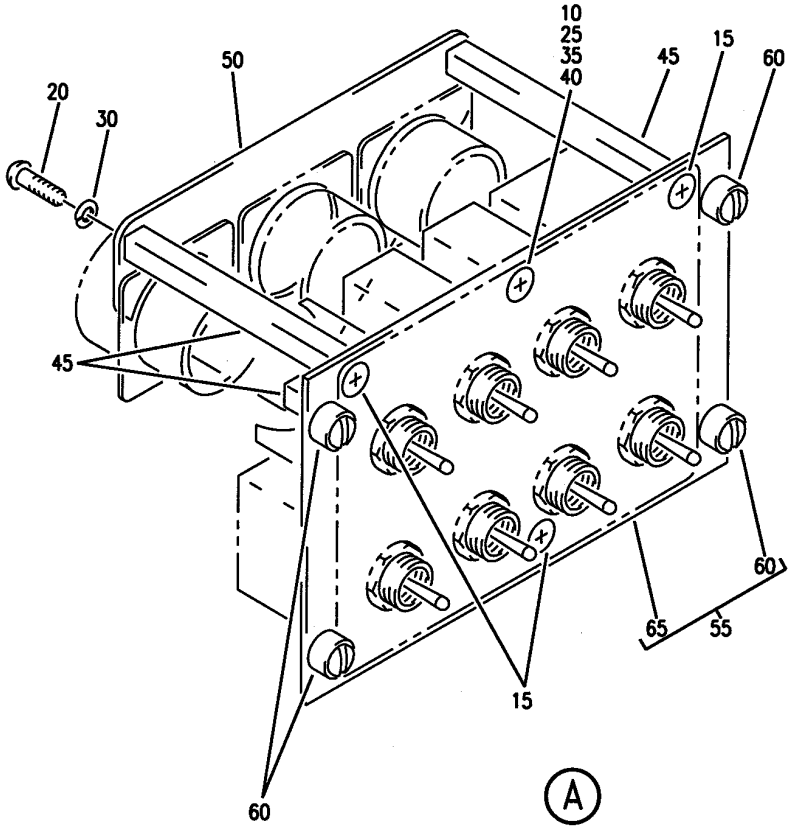

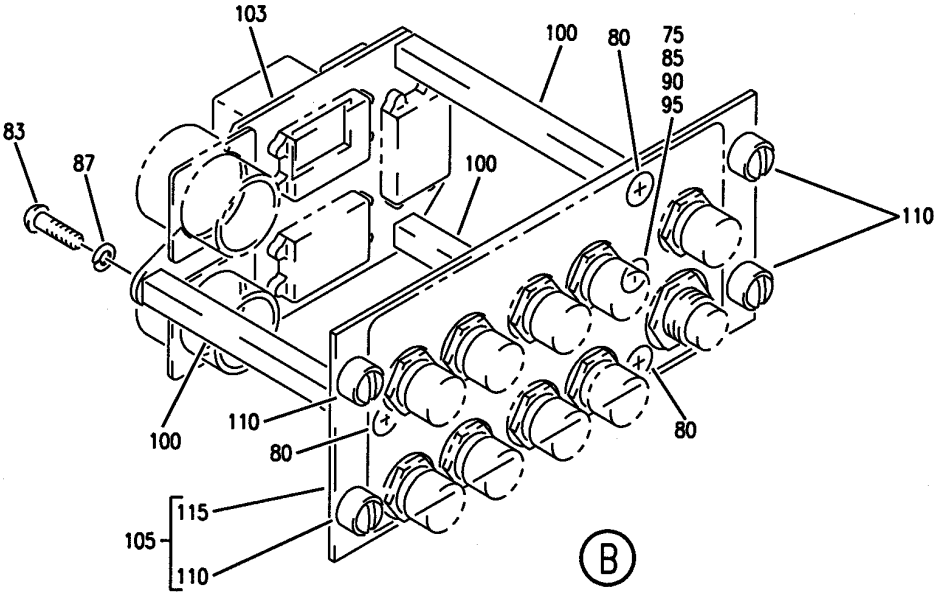

Y 31141601 SHT 2 REV 216

PANEL INSTL-P61 R SIDEWALL (PILOTS' RIGHT SIDE INSTRUMENT PANEL ONLY)
FIGURE 1 (SHEET 2)

BOEING PROPRIETARY - Copyright © - Unpublished Work - See title page for details.

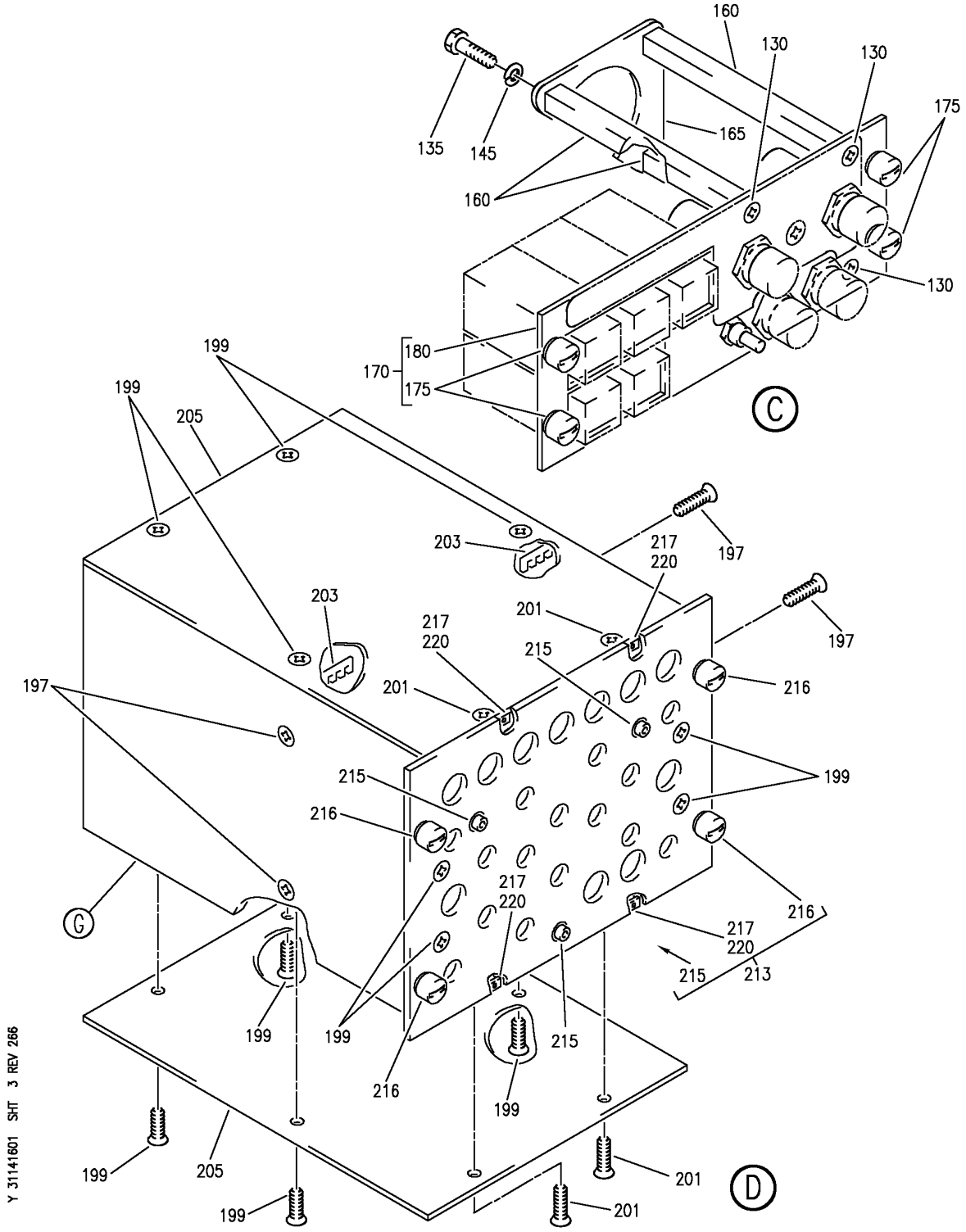

PANEL INSTL-P61 R SIDEWALL (PILOTS' RIGHT SIDE INSTRUMENT PANEL ONLY)
FIGURE 1 (SHEET 3)

BOEING PROPRIETARY - Copyright © - Unpublished Work - See title page for details.

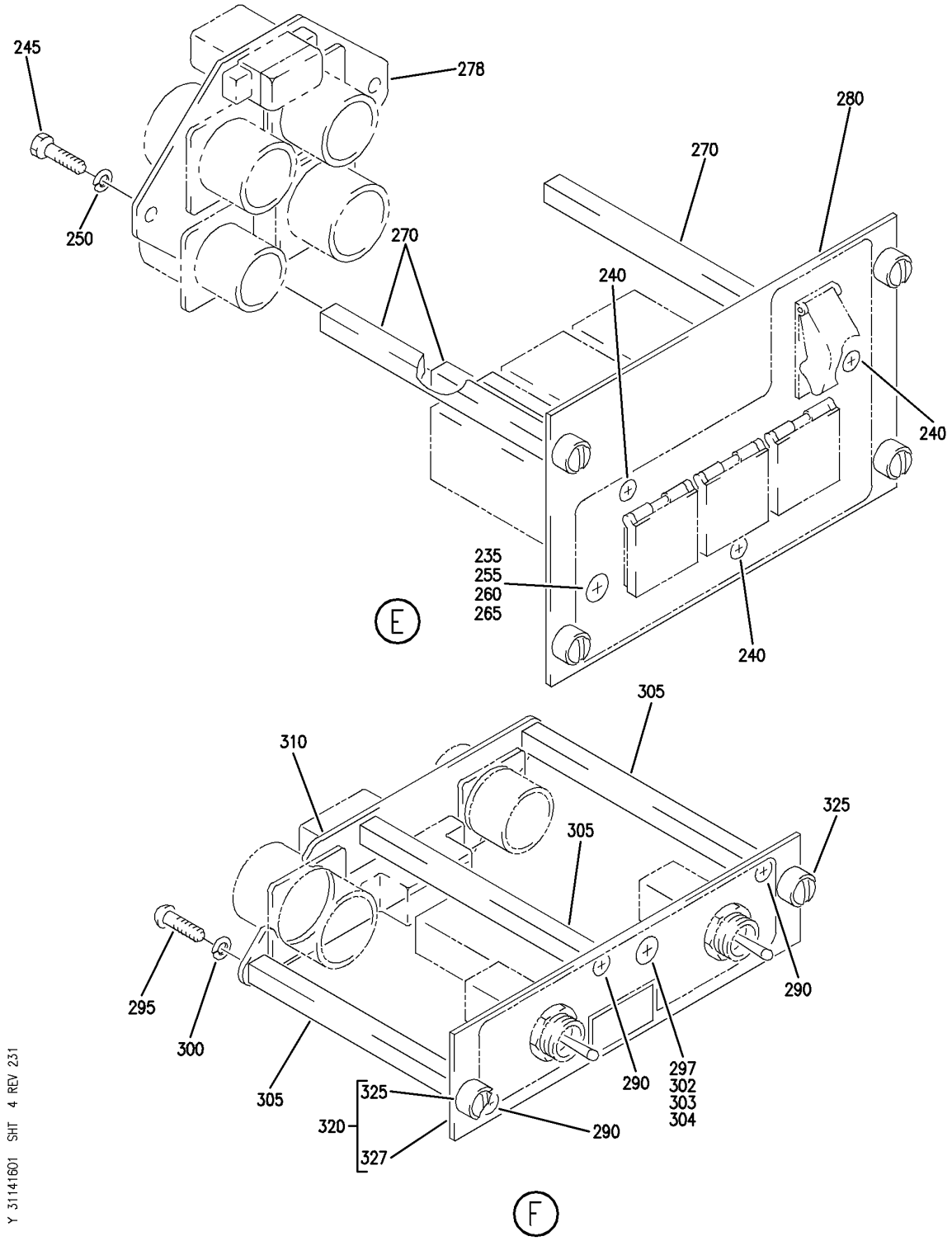

PANEL INSTL-P61 R SIDEWALL (PILOTS' RIGHT SIDE INSTRUMENT PANEL ONLY)
FIGURE 1 (SHEET 4)

BOEING PROPRIETARY - Copyright © - Unpublished Work - See title page for details.

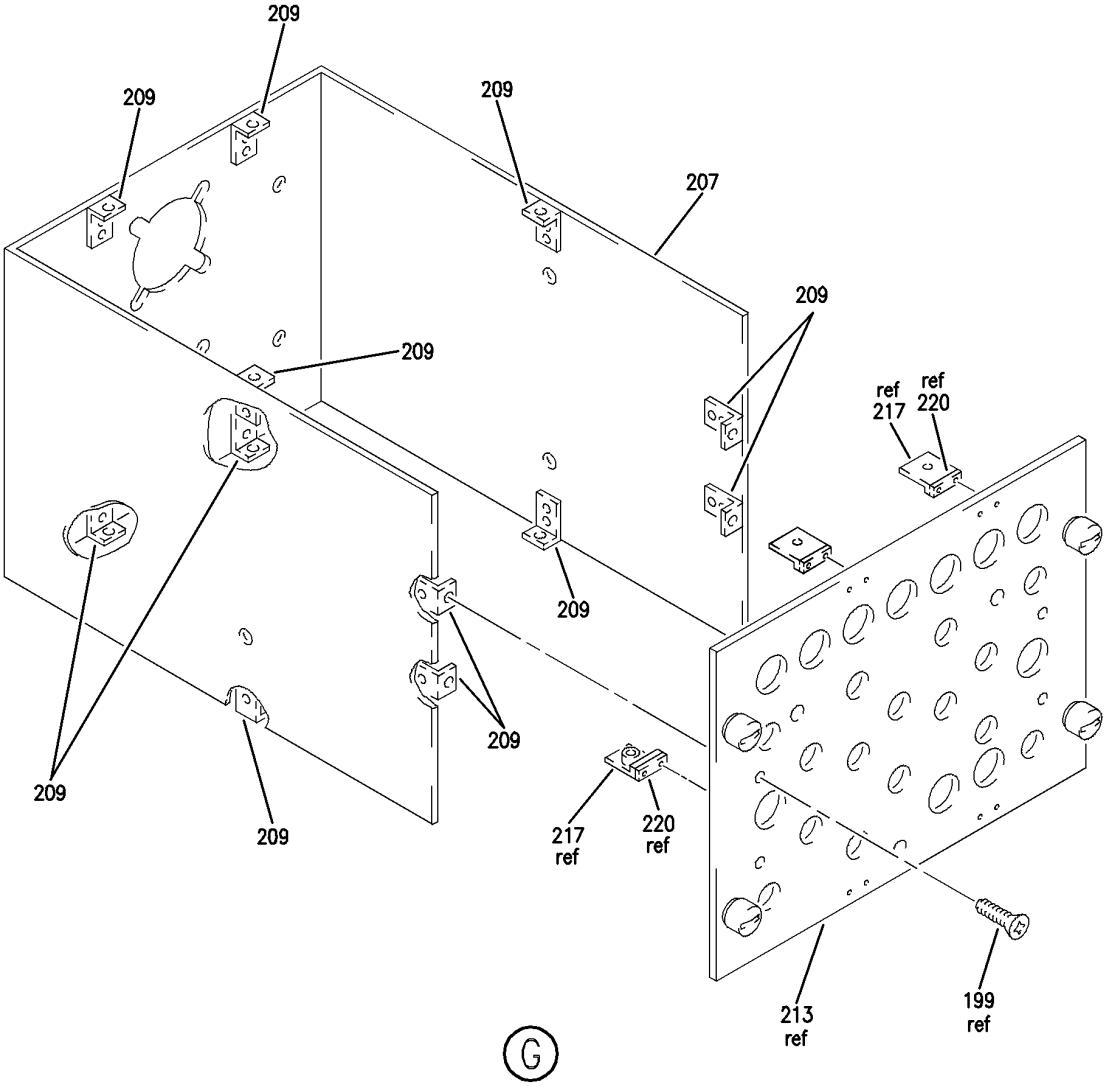

Y 31141601 SHT 5 REV 236

PANEL INSTL-P61 R SIDEWALL (PILOTS' RIGHT SIDE INSTRUMENT PANEL ONLY)
FIGURE 1 (SHEET 5)

BOEING PROPRIETARY - Copyright © - Unpublished Work - See title page for details.

FIG ITEM	PART NUMBER	1 2 3 4 5 6 7 NOMENCLATURE	EFFECT FROM TO	UNITS PER ASSY
1				
		PANEL INSTL-P61 R SIDEWALL	101101	
		(PILOTS' RIGHT SIDE		
		INSTRUMENT PANEL ONLY)		
- 1	233N7403-28	PANEL INSTL-P61 SIDEWALL	101101	RF
		(PILOTS' RIGHT SIDE		
		INSTRUMENT PANEL ONLY)		
		POSITION DATA:		
		R		
		FOR NHA/OTHER SYS DET SEE:		
		25-10-00-15B		
5	233N7501-36	.PANEL ASSY-TEST	101101	1
		SUPPLIER CODE:		
		V89954		
		ELECTRICAL EQUIP NUMBER:		
		M10398		
		COMPONENT MAINT MANUAL REF:		
		31-51-61		
		FOR OTHER SYS DETAILS SEE:		
		22-21-51-01		
		11-32-01-25		
		26-18-53-02		
		29-22-52-01		
		30-11-52-01		
		31-51-51-01		
		34-12-54-01		
		28-41-51-04		
		30-41-51-04		
		21-58-51-04		
		34-46-51-05		
5	233N7501-35	.PANEL ASSY-TEST	101101	1
		SUPPLIER CODE:		
		V89954		
		ELECTRICAL EQUIP NUMBER:		
		M10398		
		COMPONENT MAINT MANUAL REF:		
		31-51-61		
		FOR OTHER SYS DETAILS SEE:		
		22-21-51-01		
		11-32-01-25		
		26-18-53-02		
		29-22-52-01		
		30-11-52-01		
		31-51-51-01		
		34-12-54-01		
		28-41-51-04		
		30-41-51-04		
		21-58-51-04		
		34-46-51-05		
10	NAS514P1032-8	..SCREW	101101	1

MISSING ITEM NUMBERS NOT APPLICABLE

- ITEM NOT ILLUSTRATED

BOEING PROPRIETARY - Copyright © - Unpublished Work - See title page for details.

FIG ITEM	PART NUMBER	1 2 3 4 5 6 7 NOMENCLATURE	EFFECT FROM TO	UNITS PER ASSY
1				
15	NAS514P632-5	..SCREW	101101	3
20	BACS12CB06-5	..SCREW	101101	3
25	AN960D416	..WASHER	101101	1
30	MS35338-41	..WASHER	101101	3
35	BRH10A3	..NUT	101101	1
		SUPPLIER CODE:		
		V52828		
		SPECIFICATION NUMBER:		
		BACN10JC3		
		OPTIONAL PART:		
		H10-3BAC		
		V15653		
		NS202101-02		
		V80539		
		RMLH9075-3W		
		V72962		
		VN303A02		
		V92215		
		96-02		
		V80539		
		T6S1032J		
		V11815		
40	MS20341-10A	..NUT	101101	1
45	69B46200-5	..STANDOFF	101101	3
50	233N3250-18	..BRACKET-SPRT	101101	1
55	233N7501-11	..BASEPLATE ASSY-	101101	1
		SUPPLIER CODE:		
		V89954		
60	BACS21DD1B	...STUD ASSY	101101	4
		SUPPLIER CODE:		
		V08524		
		SPECIFICATION NUMBER:		
		BACS21DD1B		
65	233N7501-12	...BASEPLATE-	101101	1
		SUPPLIER CODE:		
		V89954		
70	233N7506-1	.PANEL ASSY-SQUIB TEST	101101	1
		SUPPLIER CODE:		
		V89954		
		ELECTRICAL EQUIP NUMBER:		
		M10401		
		COMPONENT MAINT MANUAL REF:		
		26-21-52		
		FOR OTHER SYS DETAILS SEE:		
		26-21-52-01		
		11-32-01-25		
		26-22-52-01		
		26-23-52-03		
75	NAS514P1032-10	..SCREW	101101	1

MISSING ITEM NUMBERS NOT APPLICABLE

— ITEM NOT ILLUSTRATED

BOEING PROPRIETARY - Copyright © - Unpublished Work - See title page for details.

FIG ITEM	PART NUMBER	1 2 3 4 5 6 7 NOMENCLATURE	EFFECT FROM TO	UNITS PER ASSY
1				
80	NAS514P632-5	..SCREW	101101	3
83	BACS12CB06-5	..SCREW	101101	3
85	AN960D416	..WASHER	101101	1
87	MS35338-41	..WASHER	101101	3
90	MS20341-10A	..NUT	101101	1
95	BRH10A3	..NUT	101101	1
		SUPPLIER CODE:		
		V52828		
		SPECIFICATION NUMBER:		
		BACN10JC3		
		OPTIONAL PART:		
		H10-3BAC		
		V15653		
		NS202101-02		
		V80539		
		RMLH9075-3W		
		V72962		
		VN303A02		
		V92215		
		96-02		
		V80539		
		T6S1032J		
		V11815		
100	69B46200-5	..STANDOFF	101101	3
103	233N3250-24	..BRACKET	101101	1
105	233N7506-2	..BASEPLATE ASSY-	101101	1
		SUPPLIER CODE:		
		V89954		
110	BACS21DD1B	...STUD ASSY	101101	4
		SUPPLIER CODE:		
		V08524		
		SPECIFICATION NUMBER:		
		BACS21DD1B		
115	233N7506-3	...BASEPLATE-	101101	1
		SUPPLIER CODE:		
		V89954		
120	233N7509-1	.PANEL ASSY-EICAS MAINT	101101	1
		SUPPLIER CODE:		
		V89954		
		ELECTRICAL EQUIP NUMBER:		
		M10372		
		COMPONENT MAINT MANUAL REF:		
		31-41-54		
		FOR OTHER SYS DETAILS SEE:		
		31-41-53-01		
		11-32-01-25		
130	NAS514P632-5	..SCREW	101101	3
135	BACS12HN06-5	..SCREW-	101101	3

MISSING ITEM NUMBERS NOT APPLICABLE

– ITEM NOT ILLUSTRATED

BOEING PROPRIETARY - Copyright © - Unpublished Work - See title page for details.

FIG ITEM	PART NUMBER	1 2 3 4 5 6 7 NOMENCLATURE	EFFECT FROM TO	UNITS PER ASSY
1				
145	MS35338-41	..WASHER-	101101	3
		OPTIONAL PART:		
		BACW10EC06S		
145	BACW10EC06S	..WASHER-	101101	3
		OPTIONAL PART:		
		MS35338-41		
160	69B46200-6	..STANDOFF	101101	3
165	233N3250-5	..BRACKET-SPRT	101101	1
170	233N7509-2	..BASEPLATE ASSY-	101101	1
		SUPPLIER CODE:		
		V89954		
175	BACS21DD1B	...STUD ASSY	101101	4
		SUPPLIER CODE:		
		V08524		
		SPECIFICATION NUMBER:		
		BACS21DD1B		
180	233N7509-3	...BASEPLATE-	101101	1
		SUPPLIER CODE:		
		V89954		
185	BACP10U0187T	.PANEL ASSY	101101	1
195	285T0022-44	.PANEL ASSY-AUDIO SELECTOR	101101	1
		SUPPLIER CODE:		
		V89954		
		ELECTRICAL EQUIP NUMBER:		
		M10216		
		COMPONENT MAINT MANUAL REF:		
		23-51-54		
		FOR OTHER SYS DETAILS SEE:		
		23-51-01-04		
		33-13-60-01		
		33-13-61-02		
		11-32-01-25		
197	NAS514P440-4	..SCREW	101101	4
199	NAS514P440-5	..SCREW	101101	12
201	NAS514P632-5	..SCREW	101101	4
203	BACG20ZA350	..GROMMET	101101	2
205	285T0179-47	..PANEL-	101101	2
		SUPPLIER CODE:		
		V89954		
207	285T0179-48	..CHASSIS ASSY-	101101	1
		SUPPLIER CODE:		
		V89954		
209	F22A27M22-40	...NUT-ANCHOR	101101	12
		SUPPLIER CODE:		
		V0217B		
		OPTIONAL PART:		
		A27M88-04		
		V62554		

MISSING ITEM NUMBERS NOT APPLICABLE

— ITEM NOT ILLUSTRATED

BOEING PROPRIETARY - Copyright © - Unpublished Work - See title page for details.

FIG ITEM	PART NUMBER	1 2 3 4 5 6 7 NOMENCLATURE	EFFECT FROM TO	UNITS PER ASSY
1				
209	A27M88-04	...NUT-ANCHOR SUPPLIER CODE: V62554 OPTIONAL PART: F22A27M22-40 V0271B ATTACHING PARTS	101101	12
- 211	BACR15BA2AD	...RIVET- SIZE DETERMINED ON INSTL. -------*-------	101101	24
213	285T0179-43	..PANEL ASSY-FRONT SUPPLIER CODE: V89954	101101	1
215	SF6G6CBB5D	...NUT SUPPLIER CODE: V12324 SPECIFICATION NUMBER: BACN10PA06-6	101101	3
216	D1400-6A1	...STUD ASSY SUPPLIER CODE: V08524 SPECIFICATION NUMBER: BACS21DD1	101101	4
217	F19716-06	...NUT-ANCHOR SUPPLIER CODE: V15653 ATTACHING PARTS	101101	4
- 218	BACR15BA2AD	...RIVET- SIZE DETERMINED ON INSTL. -------*-------	101101	8
220	285T0179-45	...SPACER- SUPPLIER CODE: V89954	101101	4
225	233N7503-56	.PANEL ASSY-GEN FIELD/HYDR SUPPLIER CODE: V89954 ELECTRICAL EQUIP NUMBER: M10191 COMPONENT MAINT MANUAL REF: 24-22-73 FOR OTHER SYS DETAILS SEE: 24-22-73-02 27-23-51-01 11-32-01-25	101101	RF
235	NAS514P1032-10	..SCREW	101101	1
240	NAS514P1032-5	..SCREW- OPTIONAL PART: FH6C5CPL12BN V12324	101101	3

MISSING ITEM NUMBERS NOT APPLICABLE

- ITEM NOT ILLUSTRATED

BOEING PROPRIETARY - Copyright © - Unpublished Work - See title page for details.

FIG ITEM	PART NUMBER	1 2 3 4 5 6 7 NOMENCLATURE	EFFECT FROM TO	UNITS PER ASSY
1				
240	FH6C5CPL12BN	..SCREW-	101101	3
		SUPPLIER CODE:		
		V12324		
		OPTIONAL PART:		
		NAS514P1032-5		
245	MS51957-27	..SCREW	101101	3
250	MS35338-136	..WASHER-	101101	3
		OPTIONAL PART:		
		BACW10EC06CD		
250	BACW10EC06CD	..WASHER-	101101	3
		OPTIONAL PART:		
		MS35338-136		
255	NAS1149D0463H	..WASHER	101101	1
260	MS35650-305T	..NUT	101101	1
265	BRH10C3D	..NUT	101101	1
		SUPPLIER CODE:		
		V52828		
		SPECIFICATION NUMBER:		
		BACN10JC3CD		
		OPTIONAL PART:		
		T6C1032JCD		
		V11815		
		NS202486-02		
		V80539		
		102LH9075-3W		
		V72962		
		H51650-3BAC		
		V15653		
270	69B46200-12	..STANDOFF	101101	3
278	233N3250-42	..BRACKET	101101	1
280	233N7503-58	..BASEPLATE ASSY-	101101	1
		SUPPLIER CODE:		
		V89954		
		ALTERED FROM PART NUMBER:		
		BACP10U0375T		
		MANUFACTURED FROM:		
		BACP10U0375T		
285	233N7508-14	.PANEL ASSY-FLIGHT	101101	1
		RECORDER/SVCE INTPH		
		SUPPLIER CODE:		
		V89954		
		ELECTRICAL EQUIP NUMBER:		
		M00033		
		COMPONENT MAINT MANUAL REF:		
		31-31-52		
		FOR OTHER SYS DETAILS SEE:		
		23-41-52-01		
		31-31-04-01		
		11-32-01-25		

MISSING ITEM NUMBERS NOT APPLICABLE

— ITEM NOT ILLUSTRATED

BOEING PROPRIETARY - Copyright © - Unpublished Work - See title page for details.

FIG ITEM	PART NUMBER	1 2 3 4 5 6 7 NOMENCLATURE	EFFECT FROM TO	UNITS PER ASSY
1				
285	233N7508-9	.PANEL ASSY-FLIGHT RECORDER/SVCE INTPH SUPPLIER CODE: V89954 ELECTRICAL EQUIP NUMBER: M00033 COMPONENT MAINT MANUAL REF: 31-31-52 FOR OTHER SYS DETAILS SEE: 11-32-01-25 23-41-52-01 31-31-04-01	101101	1
290	NAS514P632-5	..SCREW	101101	3
295	BACS12CB06-5	..SCREW- USED ON: 233N7508-9	101101	3
295	NAS1801-06-5	..SCREW- USED ON: 233N7508-14	101101	3
297	NAS514P1032-10	..SCREW	101101	1
300	MS35338-41	..WASHER- USED ON: 233N7508-9	101101	3
300	BACW10EC06S	..WASHER- USED ON: 233N7508-14	101101	3
302	AN960D416	..WASHER- USED ON: 233N7508-9	101101	1
302	NAS1149D0463H	..WASHER- USED ON: 233N7508-14	101101	1

MISSING ITEM NUMBERS NOT APPLICABLE

– ITEM NOT ILLUSTRATED

BOEING PROPRIETARY - Copyright © - Unpublished Work - See title page for details.

FIG ITEM	PART NUMBER	1 2 3 4 5 6 7 NOMENCLATURE	EFFECT FROM TO	UNITS PER ASSY
1				
303	BRH10A3	..NUT-	101101	1
		SUPPLIER CODE:		
		V52828		
		SPECIFICATION NUMBER:		
		BACN10JC3		
		OPTIONAL PART:		
		H10-3BAC		
		V15653		
		NS202101-02		
		V80539		
		RMLH9075-3W		
		V72962		
		VN303A02		
		V92215		
		96-02		
		V80539		
		T6S1032J		
		V11815		
		USED ON:		
		233N7508-9		
303	BRH10C3D	..NUT-	101101	1
		SUPPLIER CODE:		
		V52828		
		SPECIFICATION NUMBER:		
		BACN10JC3CD		
		OPTIONAL PART:		
		T6C1032JCD		
		V11815		
		NS202486-02		
		V80539		
		102LH9075-3W		
		V72962		
		H51650-3BAC		
		V15653		
		USED ON:		
		233N7508-14		
304	MS20341-10A	..NUT-	101101	1
		USED ON:		
		233N7508-9		
304	MS35650-305T	..NUT-	101101	1
		USED ON:		
		233N7508-14		
305	69B46200-8	..STANDOFF	101101	3
310	233N7508-4	..BRACKET ASSY-	101101	1
		SUPPLIER CODE:		
		V89954		
320	233N7508-2	..BASEPLATE ASSY-	101101	1
		SUPPLIER CODE:		
		V89954		

MISSING ITEM NUMBERS NOT APPLICABLE

— ITEM NOT ILLUSTRATED

BOEING PROPRIETARY - Copyright © - Unpublished Work - See title page for details.

FIG ITEM	PART NUMBER	1 2 3 4 5 6 7 NOMENCLATURE	EFFECT FROM TO	UNITS PER ASSY
1				
325	BACS21DD1B	...STUD ASSY SUPPLIER CODE: V08524 SPECIFICATION NUMBER: BACS21DD1B	101101	2
327	233N7508-3	...BASEPLATE- SUPPLIER CODE: V89954	101101	1
330	BACP10U0075T	.PANEL ASSY	101101	1
335	BACP10U0900T	.PANEL ASSY	101101	1

MISSING ITEM NUMBERS NOT APPLICABLE

– ITEM NOT ILLUSTRATED

BOEING PROPRIETARY - Copyright © - Unpublished Work - See title page for details.

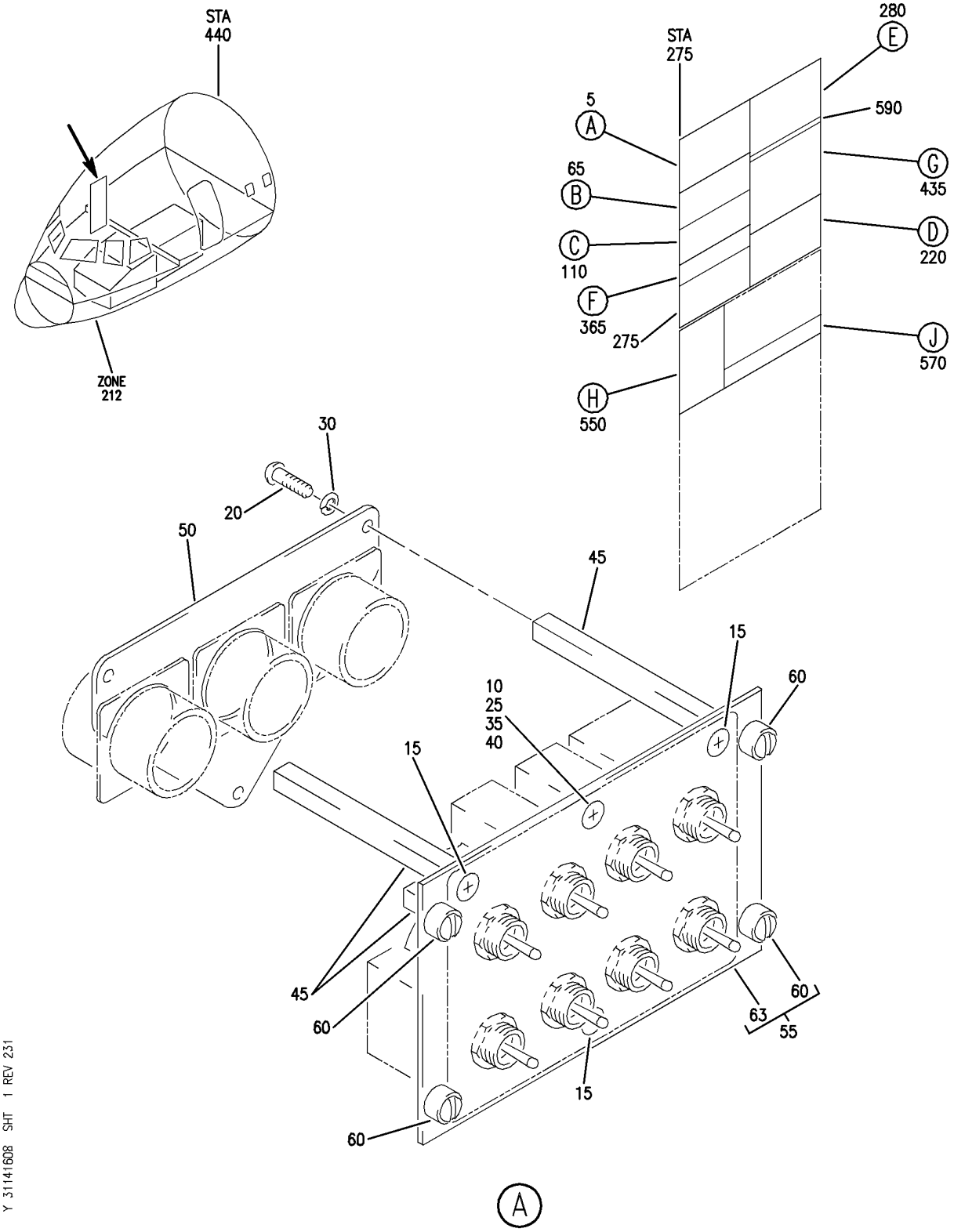

PANEL INSTL-P61 R SIDEWALL (PILOTS' RIGHT SIDE INSTRUMENT PANEL ONLY)
FIGURE 8 (SHEET 1)

BOEING PROPRIETARY - Copyright © - Unpublished Work - See title page for details.

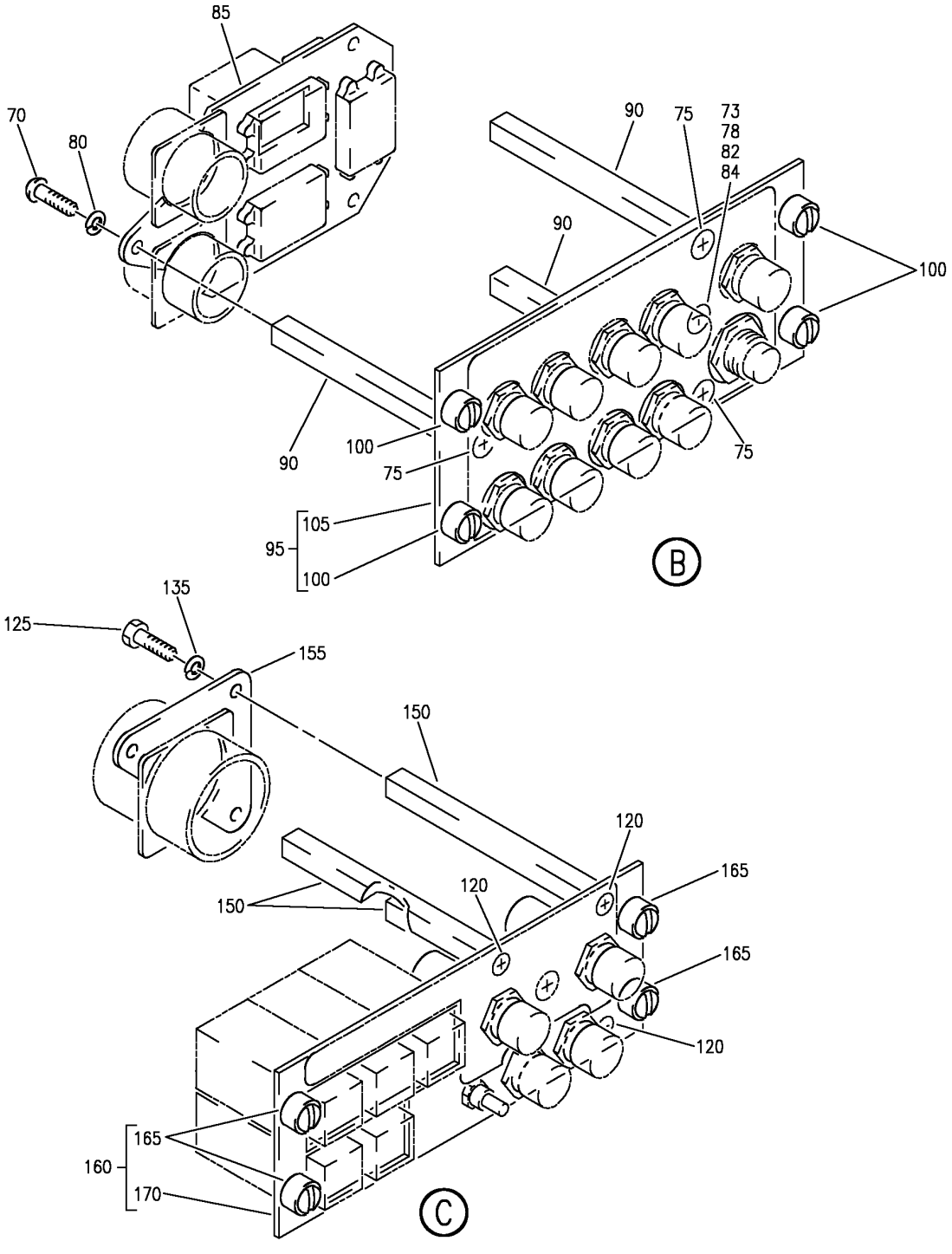

PANEL INSTL-P61 R SIDEWALL (PILOTS' RIGHT SIDE INSTRUMENT PANEL ONLY)
FIGURE 8 (SHEET 2)

BOEING PROPRIETARY - Copyright © - Unpublished Work - See title page for details.

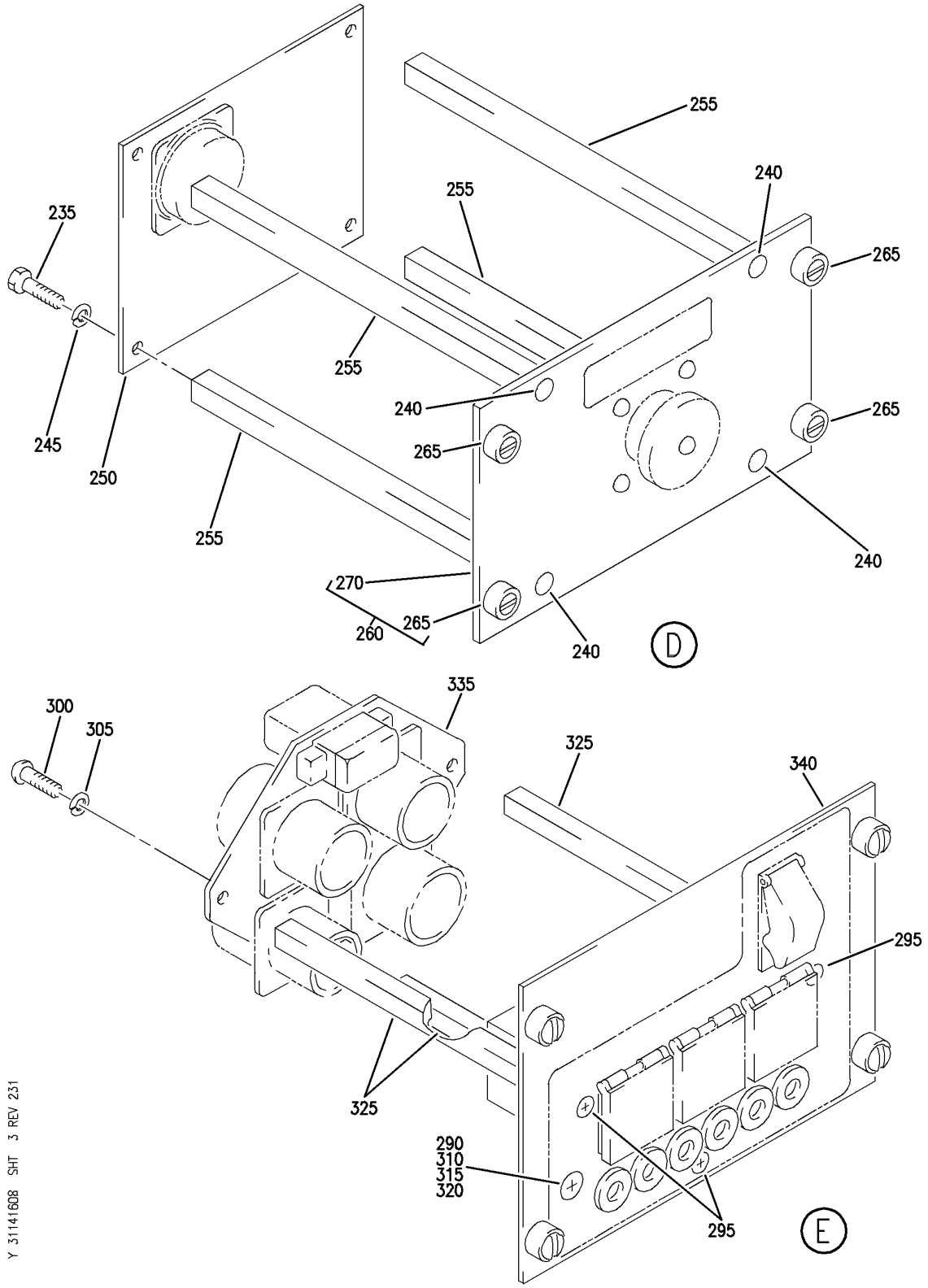

PANEL INSTL-P61 R SIDEWALL (PILOTS' RIGHT SIDE INSTRUMENT PANEL ONLY)
FIGURE 8 (SHEET 3)

BOEING PROPRIETARY - Copyright © - Unpublished Work - See title page for details.

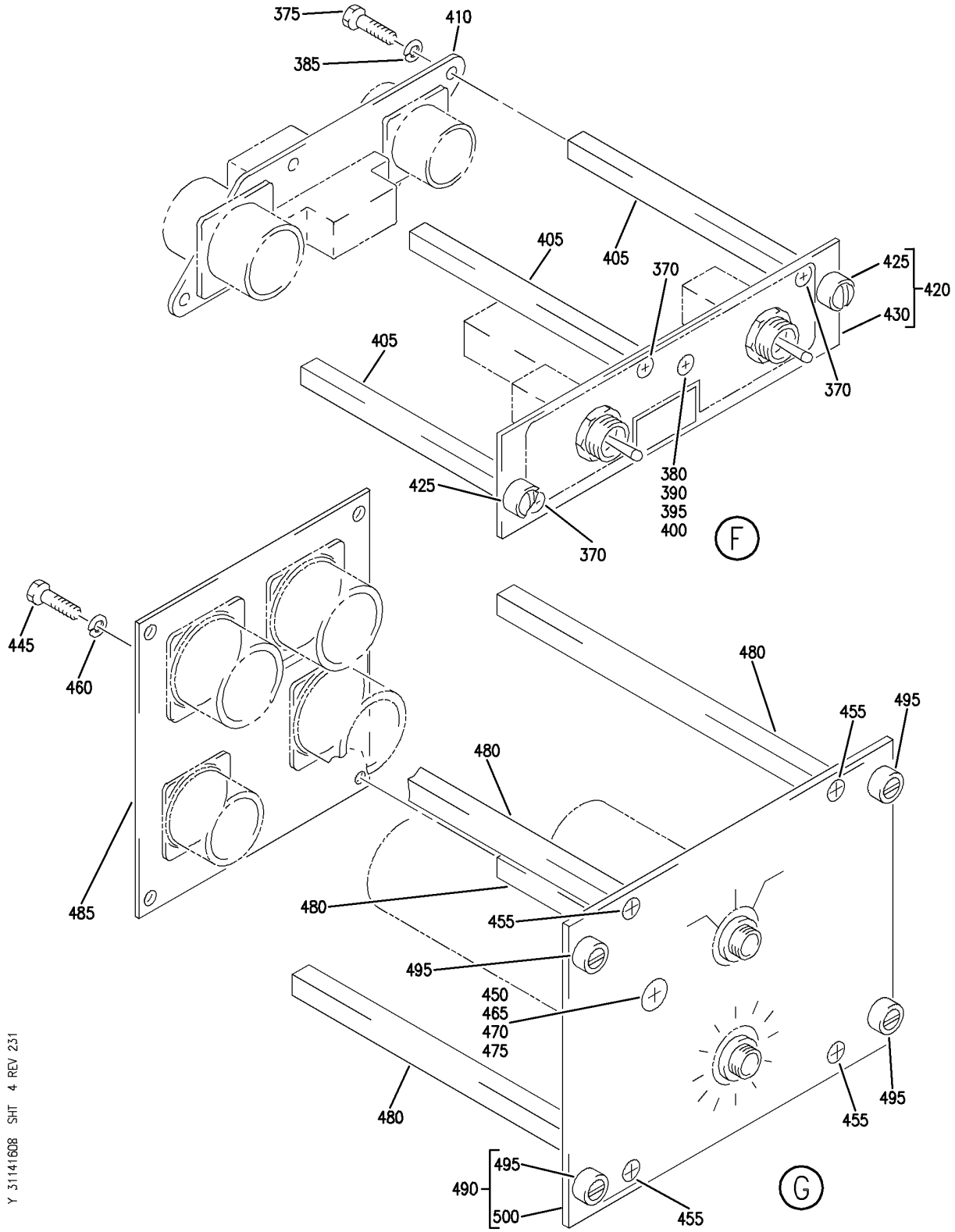

PANEL INSTL-P61 R SIDEWALL (PILOTS' RIGHT SIDE INSTRUMENT PANEL ONLY)
FIGURE 8 (SHEET 4)

BOEING PROPRIETARY - Copyright © - Unpublished Work - See title page for details.

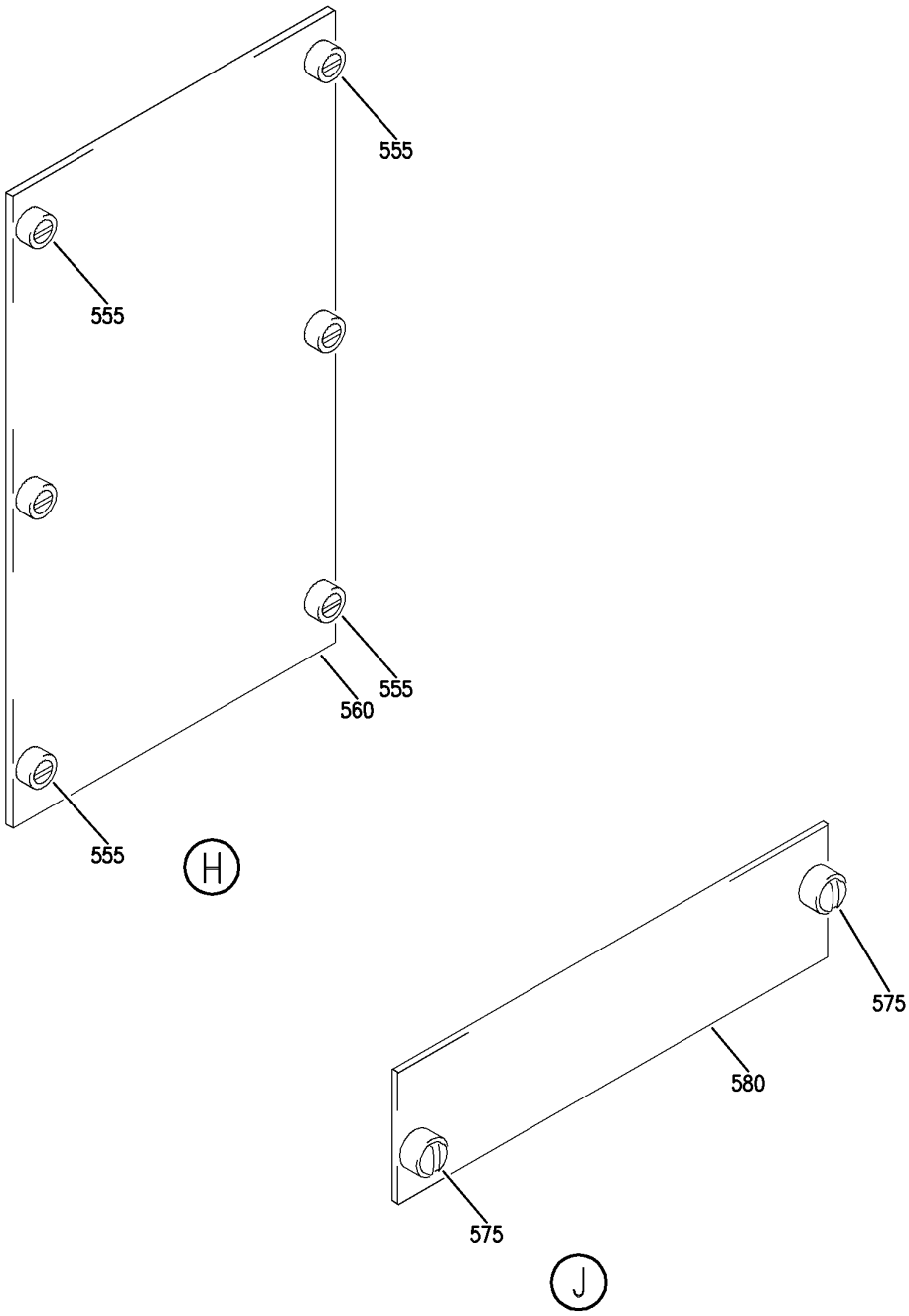

Y 31141608 SHT 5 REV 231

PANEL INSTL-P61 R SIDEWALL (PILOTS' RIGHT SIDE INSTRUMENT PANEL ONLY)
FIGURE 8 (SHEET 5)

BOEING PROPRIETARY - Copyright © - Unpublished Work - See title page for details.

FIG ITEM	PART NUMBER	1 2 3 4 5 6 7 NOMENCLATURE	EFFECT FROM TO	UNITS PER ASSY
8				
		PANEL INSTL-P61 R SIDEWALL	108120	
		(PILOTS' RIGHT SIDE		
		INSTRUMENT PANEL ONLY)		
- 1	233N7403-158	PANEL INSTL-P61 SIDEWALL	108120	RF
		(PILOTS' RIGHT SIDE		
		INSTRUMENT PANEL ONLY)		
		POSITION DATA:		
		R		
		FOR NHA/OTHER SYS DET SEE:		
		25-10-00-15B		
5	233N7501-36	.PANEL ASSY-TEST	108120	1
		SUPPLIER CODE:		
		V89954		
		ELECTRICAL EQUIP NUMBER:		
		M10398		
		COMPONENT MAINT MANUAL REF:		
		31-51-61		
		FOR OTHER SYS DETAILS SEE:		
		11-32-01-88		
		21-58-51-04		
		22-21-51-01		
		26-18-53-02		
		28-41-51-04		
		29-22-52-01		
		30-11-52-01		
		30-41-51-04		
		31-51-51-01		
		34-12-54-01		
		34-46-51-05		
5	233N7501-35	.PANEL ASSY-TEST	108120	1
		SUPPLIER CODE:		
		V89954		
		ELECTRICAL EQUIP NUMBER:		
		M10398		
		COMPONENT MAINT MANUAL REF:		
		31-51-61		
		FOR OTHER SYS DETAILS SEE:		
		11-32-01-88		
		21-58-51-04		
		22-21-51-01		
		26-18-53-02		
		28-41-51-04		
		29-22-52-01		
		30-11-52-01		
		30-41-51-04		
		31-51-51-01		
		34-12-54-01		
		34-46-51-05		
10	NAS514P1032-8	..SCREW	108120	1

MISSING ITEM NUMBERS NOT APPLICABLE

- ITEM NOT ILLUSTRATED

BOEING PROPRIETARY - Copyright © - Unpublished Work - See title page for details.

FIG ITEM	PART NUMBER	1 2 3 4 5 6 7 NOMENCLATURE	EFFECT FROM TO	UNITS PER ASSY
8				
15	NAS514P632-5	..SCREW	108120	3
20	BACS12CB06-5	..SCREW	108120	3
25	AN960D416	..WASHER	108120	1
30	MS35338-41	..WASHER	108120	3
35	BRH10A3	..NUT	108120	1
		SUPPLIER CODE:		
		V52828		
		SPECIFICATION NUMBER:		
		BACN10JC3		
		OPTIONAL PART:		
		H10-3BAC		
		V15653		
		NS202101-02		
		V80539		
		RMLH9075-3W		
		V72962		
		VN303A02		
		V92215		
		96-02		
		V80539		
		T6S1032J		
		V11815		
40	MS20341-10A	..NUT	108120	1
45	69B46200-5	..STANDOFF	108120	3
50	233N3250-18	..BRACKET-SPRT	108120	1
55	233N7501-11	..BASEPLATE ASSY-	108120	1
		SUPPLIER CODE:		
		V89954		
60	BACS21DD1B	...STUD ASSY	108120	4
		SUPPLIER CODE:		
		V08524		
		SPECIFICATION NUMBER:		
		BACS21DD1B		
63	233N7501-12	...BASEPLATE-	108120	1
		SUPPLIER CODE:		
		V89954		
65	233N7506-1	.PANEL ASSY-SQUIB TEST	108120	1
		SUPPLIER CODE:		
		V89954		
		ELECTRICAL EQUIP NUMBER:		
		M00032		
		COMPONENT MAINT MANUAL REF:		
		26-21-52		
		FOR OTHER SYS DETAILS SEE:		
		11-32-01-88		
		26-21-52-01		
		26-22-52-01		
		26-23-52-03		
70	BACS12CB06-5	..SCREW	108120	3

MISSING ITEM NUMBERS NOT APPLICABLE

– ITEM NOT ILLUSTRATED

BOEING PROPRIETARY - Copyright © - Unpublished Work - See title page for details.

FIG ITEM	PART NUMBER	1 2 3 4 5 6 7 NOMENCLATURE	EFFECT FROM TO	UNITS PER ASSY
8				
73	NAS514P1032-10	..SCREW	108120	1
75	NAS514P632-5	..SCREW	108120	3
78	AN960D10L	..WASHER	108120	1
80	MS35338-41	..WASHER	108120	3
82	MS20341-10A	..NUT	108120	1
84	BRH10A3	..NUT	108120	1
		SUPPLIER CODE:		
		V52828		
		SPECIFICATION NUMBER:		
		BACN10JC3		
		OPTIONAL PART:		
		H10-3BAC		
		V15653		
		NS202101-02		
		V80539		
		RMLH9075-3W		
		V72962		
		VN303A02		
		V92215		
		96-02		
		V80539		
		T6S1032J		
		V11815		
85	233N3250-24	..BRACKET-SPRT	108120	1
90	69B46200-5	..STANDOFF	108120	3
95	233N7506-2	..BASEPLATE ASSY-	108120	1
		SUPPLIER CODE:		
		V89954		
100	BACS21DD1B	...STUD ASSY	108120	4
		SUPPLIER CODE:		
		V08524		
		SPECIFICATION NUMBER:		
		BACS21DD1B		
105	233N7506-3	...BASEPLATE-	108120	1
		SUPPLIER CODE:		
		V89954		
110	233N7509-1	.PANEL ASSY-EICAS MAINT	108120	1
		SUPPLIER CODE:		
		V89954		
		ELECTRICAL EQUIP NUMBER:		
		M10372		
		COMPONENT MAINT MANUAL REF:		
		31-41-54		
		FOR OTHER SYS DETAILS SEE:		
		11-32-01-88		
		31-41-53-01		
120	NAS514P632-5	..SCREW	108120	3
125	BACS12HN06-5	..SCREW-	108120	3

MISSING ITEM NUMBERS NOT APPLICABLE

– ITEM NOT ILLUSTRATED

BOEING PROPRIETARY - Copyright © - Unpublished Work - See title page for details.

FIG ITEM	PART NUMBER	1 2 3 4 5 6 7 NOMENCLATURE	EFFECT FROM TO	UNITS PER ASSY
8				
135	MS35338-41	..WASHER-	108120	3
		OPTIONAL PART:		
		BACW10EC06S		
135	BACW10EC06S	..WASHER-	108120	3
		OPTIONAL PART:		
		MS35338-41		
150	69B46200-6	..STANDOFF	108120	3
155	233N3250-5	..BRACKET-SPRT	108120	1
160	233N7509-2	..BASEPLATE ASSY-	108120	1
		SUPPLIER CODE:		
		V89954		
165	BACS21DD1B	...STUD ASSY	108120	4
		SUPPLIER CODE:		
		V08524		
		SPECIFICATION NUMBER:		
		BACS21DD1B		
170	233N7509-3	...BASEPLATE-	108120	1
		SUPPLIER CODE:		
		V89954		
220	233N7519-300	.PANEL ASSY-DATA TRANSFER	108120	1
		UNIT RCPT		
		SUPPLIER CODE:		
		V89954		
		ELECTRICAL EQUIP NUMBER:		
		M01736		
		COMPONENT MAINT MANUAL REF:		
		34-61-04		
- 230	233N7519-1	..MODULE ASSY-	108120	RF
		SUPPLIER CODE:		
		V89954		
235	MS51957-27	...SCREW	108120	4
240	FH6C5CPL12BN	...SCREW-	108120	4
		SUPPLIER CODE:		
		V12324		
245	MS35338-136	...WASHER	108120	4
250	233A7204-402	...BRACKET-SPRT	108120	1
		SUPPLIER CODE:		
		V89954		
255	69B46200-19	...STANDOFF	108120	4
260	233N7519-2	...BASEPLATE ASSY-	108120	1
		SUPPLIER CODE:		
		V89954		
265	PFSC35-38ASEMB	....STUD ASSY	108120	4
		SUPPLIER CODE:		
		V72794		
		SPECIFICATION NUMBER:		
		BACS21DX1B		
270	BACP10U0375N	....PANEL ASSY	108120	1
275	BAC10U0300TC	.PANEL ASSY	108120	2

MISSING ITEM NUMBERS NOT APPLICABLE

- ITEM NOT ILLUSTRATED

BOEING PROPRIETARY - Copyright © - Unpublished Work - See title page for details.

FIG ITEM	PART NUMBER	1 2 3 4 5 6 7 NOMENCLATURE	EFFECT FROM TO	UNITS PER ASSY
8				
280	233N7503-51	.PANEL ASSY-GEN FIELD AND HYDR SUPPLIER CODE: V89954 ELECTRICAL EQUIP NUMBER: M10191 COMPONENT MAINT MANUAL REF: 24-22-73 QUALIFIED I/W DATA: -32 I/W -51 EXCEPT WHEN INSTALLING A -32 IN PLACE OF -51 FIELD GENERATOR SWITCHES S1, S2, S3 MUST BE MARKED INOPERABLE. FOR OTHER SYS DETAILS SEE: 11-32-01-88, 24-22-73-02, 27-23-51-01, 29-18-51-01, 29-22-52-01	108120	1
290	NAS514P1032-10	..SCREW	108120	1
295	NAS514P632-5	..SCREW	108120	3
300	BACS12HN06-5	..SCREW- OPTIONAL PART: NAS1801-06-5	108120	3
300	NAS1801-06-5	..SCREW- OPTIONAL PART: BACS12HN06-5	108120	3
305	BACW10EC06S	..WASHER-	108120	3
310	NAS1149D0463H	..WASHER-	108120	1
315	MS35650-305T	..NUT	108120	1

MISSING ITEM NUMBERS NOT APPLICABLE

– ITEM NOT ILLUSTRATED

BOEING PROPRIETARY - Copyright © - Unpublished Work - See title page for details.

FIG ITEM	PART NUMBER	1 2 3 4 5 6 7 NOMENCLATURE	EFFECT FROM TO	UNITS PER ASSY
8				
320	BRH10A3	..NUT SUPPLIER CODE: V52828 SPECIFICATION NUMBER: BACN10JC3 OPTIONAL PART: H10-3BAC V15653 NS202101-02 V80539 RMLH9075-3W V72962 VN303A02 V92215 96-02 V80539 T6S1032J V11815	108120	1
325	69B46200-12	..STANDOFF	108120	3
335	233N7503-23	..BRACKET ASSY- SUPPLIER CODE: V89954	108120	1
340	233N7503-54	..BASEPLATE ASSY- SUPPLIER CODE: V89954	108120	1
365	233N7508-14	.PANEL ASSY-FLIGHT RECORDER/SVCE INTPH SUPPLIER CODE: V89954 ELECTRICAL EQUIP NUMBER: M00033 COMPONENT MAINT MANUAL REF: 31-31-52 FOR OTHER SYS DETAILS SEE: 11-32-01-88 23-41-52-01 31-31-04-01	108120	1
365	233N7508-9	.PANEL ASSY-FLIGHT RECORDER/SVCE INTPH SUPPLIER CODE: V89954 ELECTRICAL EQUIP NUMBER: M00033 COMPONENT MAINT MANUAL REF: 31-31-52 FOR OTHER SYS DETAILS SEE: 11-32-01-88 23-41-52-01 31-31-04-01	108120	1

MISSING ITEM NUMBERS NOT APPLICABLE

– ITEM NOT ILLUSTRATED

BOEING PROPRIETARY - Copyright © - Unpublished Work - See title page for details.

FIG ITEM	PART NUMBER	1 2 3 4 5 6 7 NOMENCLATURE	EFFECT FROM TO	UNITS PER ASSY
8				
370	NAS514P632-5	..SCREW	108120	3
375	BACS12CB06-5	..SCREW-	108120	3
		USED ON:		
		233N7508-9		
375	NAS1801-06-5	..SCREW-	108120	3
		USED ON:		
		233N7508-14		
380	NAS514P1032-10	..SCREW	108120	1
385	MS35338-41	..WASHER-	108120	3
		USED ON:		
		233N7508-9		
385	BACW10EC06S	..WASHER-	108120	3
		USED ON:		
		233N7508-14		
390	AN960D416	..WASHER-	108120	1
		USED ON:		
		233N7508-9		
390	NAS1149D0463H	..WASHER-	108120	1
		USED ON:		
		233N7508-14		
395	BRH10A3	..NUT-	108120	1
		SUPPLIER CODE:		
		V52828		
		SPECIFICATION NUMBER:		
		BACN10JC3		
		OPTIONAL PART:		
		H10-3BAC		
		V15653		
		NS202101-02		
		V80539		
		RMLH9075-3W		
		V72962		
		VN303A02		
		V92215		
		96-02		
		V80539		
		T6S1032J		
		V11815		
		USED ON:		
		233N7508-9		

MISSING ITEM NUMBERS NOT APPLICABLE

– ITEM NOT ILLUSTRATED

BOEING PROPRIETARY - Copyright © - Unpublished Work - See title page for details.

FIG ITEM	PART NUMBER	1 2 3 4 5 6 7 NOMENCLATURE	EFFECT FROM TO	UNITS PER ASSY
8				
395	BRH10C3D	..NUT-	108120	1
		SUPPLIER CODE:		
		V52828		
		SPECIFICATION NUMBER:		
		BACN10JC3CD		
		OPTIONAL PART:		
		T6C1032JCD		
		V11815		
		NS202486-02		
		V80539		
		102LH9075-3W		
		V72962		
		H51650-3BAC		
		V15653		
		USED ON:		
		233N7508-14		
400	MS20341-10A	..NUT-	108120	1
		USED ON:		
		233N7508-9		
400	MS35650-305T	..NUT-	108120	1
		USED ON:		
		233N7508-14		
405	69B46200-8	..STANDOFF	108120	3
410	233N7508-4	..BRACKET ASSY-	108120	1
		SUPPLIER CODE:		
		V89954		
420	233N7508-2	..BASEPLATE ASSY-	108120	1
		SUPPLIER CODE:		
		V89954		
425	BACS21DD1B	...STUD ASSY	108120	2
		SUPPLIER CODE:		
		V08524		
		SPECIFICATION NUMBER:		
		BACS21DD1B		
430	233N7508-3	...BASEPLATE-	108120	1
		SUPPLIER CODE:		
		V89954		
435	233N7500-305	.PANEL ASSY-AIRBORNE DATA	108120	1
		LOADER		
		SUPPLIER CODE:		
		V89954		
		ELECTRICAL EQUIP NUMBER:		
		M01737		
		COMPONENT MAINT MANUAL REF:		
		34-61-03		
		FOR OTHER SYS DETAILS SEE:		
		11-32-01-88		
		34-61-53-03		

MISSING ITEM NUMBERS NOT APPLICABLE

– ITEM NOT ILLUSTRATED

BOEING PROPRIETARY - Copyright © - Unpublished Work - See title page for details.

FIG ITEM	PART NUMBER	1 2 3 4 5 6 7 NOMENCLATURE	EFFECT FROM TO	UNITS PER ASSY
8				
- 440	233N7500-13	..PANEL ASSY-	108120	RF
		SUPPLIER CODE:		
		V89954		
445	MS51957-27	...SCREW	108120	4
450	NAS514P1032-10	...SCREW-	108120	1
455	FH6C5CPL12BN	...SCREW-	108120	4
		SUPPLIER CODE:		
		V12324		
460	MS35338-136	...WASHER	108120	4
465	AN960D416	...WASHER	108120	1
470	MS35650-305T	...NUT	108120	1
475	MS21042L3	...NUT	108120	1
480	69B46200-19	...STANDOFF	108120	4
485	233T6200-228	...BRACKET-SPRT	108120	1
490	233N7500-14	...BASEPLATE ASSY-	108120	1
		SUPPLIER CODE:		
		V89954		
495	PFSC35-38ASEMB	....STUD ASSY	108120	4
		SUPPLIER CODE:		
		V72794		
		SPECIFICATION NUMBER:		
		BACS21DX1B		
500	233N7500-15	....BASEPLATE-	108120	1
		SUPPLIER CODE:		
		V89954		
550	233N3250-66	.PANEL ASSY-BLANK	108120	1
555	PFSC35-38ASEMB	..STUD ASSY	108120	6
		SUPPLIER CODE:		
		V72794		
		SPECIFICATION NUMBER:		
		BACS21DX1B		
560	233N3250-67	..PANEL	108120	1
570	233N3250-68	.PANEL ASSY-BLANK	108120	1
575	PFSC35-38ASEMB	..STUD ASSY	108120	2
		SUPPLIER CODE:		
		V72794		
		SPECIFICATION NUMBER:		
		BACS21DX1B		
580	233N3250-69	..PANEL	108120	1
590	BACP10U0037TC	.PANEL ASSY	108120	1

MISSING ITEM NUMBERS NOT APPLICABLE

- ITEM NOT ILLUSTRATED

BOEING PROPRIETARY - Copyright © - Unpublished Work - See title page for details.

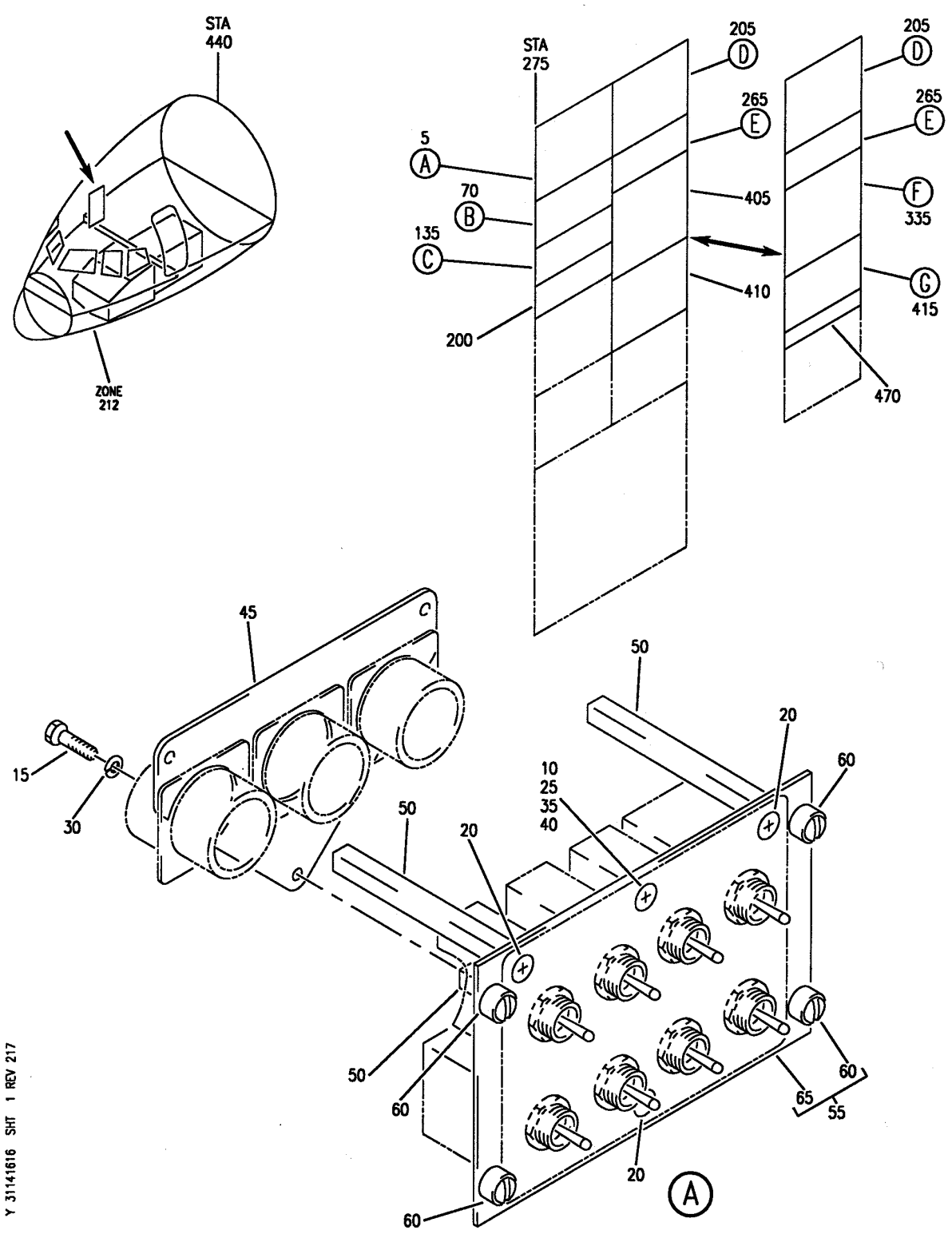

PANEL INSTL-P61 R SIDEWALL (PILOTS' RIGHT SIDE INSTRUMENT PANEL ONLY)
FIGURE 16 (SHEET 1)

BOEING PROPRIETARY - Copyright © - Unpublished Work - See title page for details.

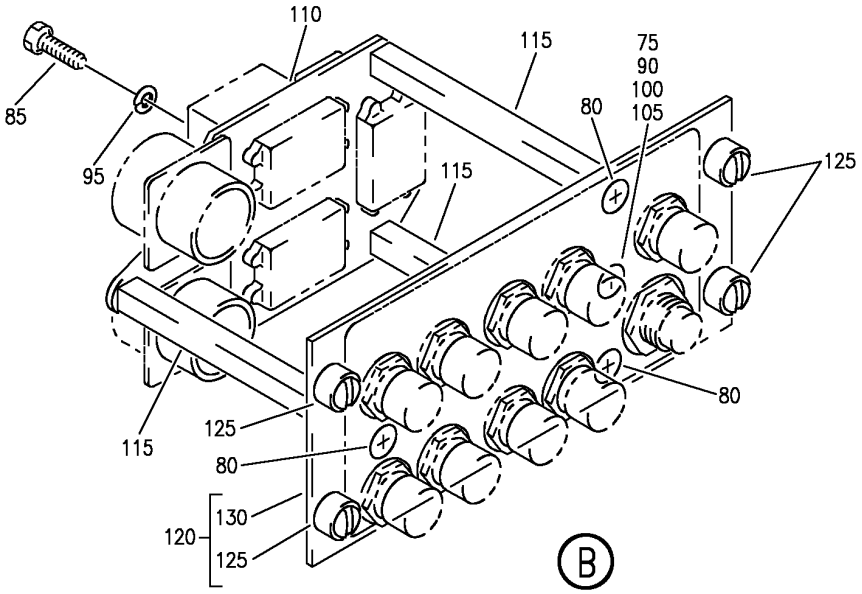

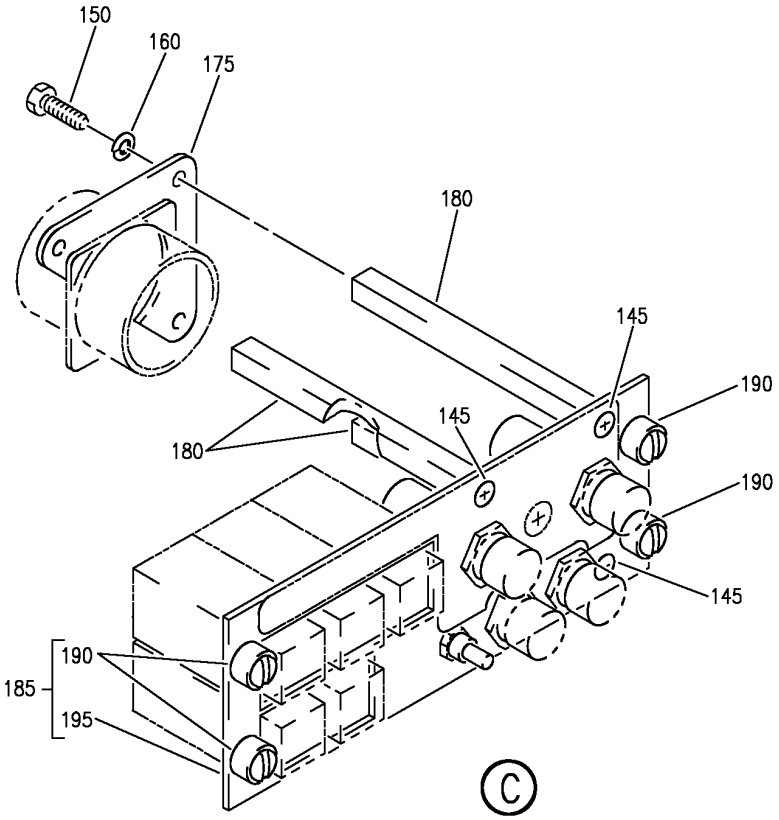

Y 31141616 SHT 2 REV 266

PANEL INSTL-P61 R SIDEWALL (PILOTS' RIGHT SIDE INSTRUMENT PANEL ONLY)
FIGURE 16 (SHEET 2)

BOEING PROPRIETARY - Copyright © - Unpublished Work - See title page for details.

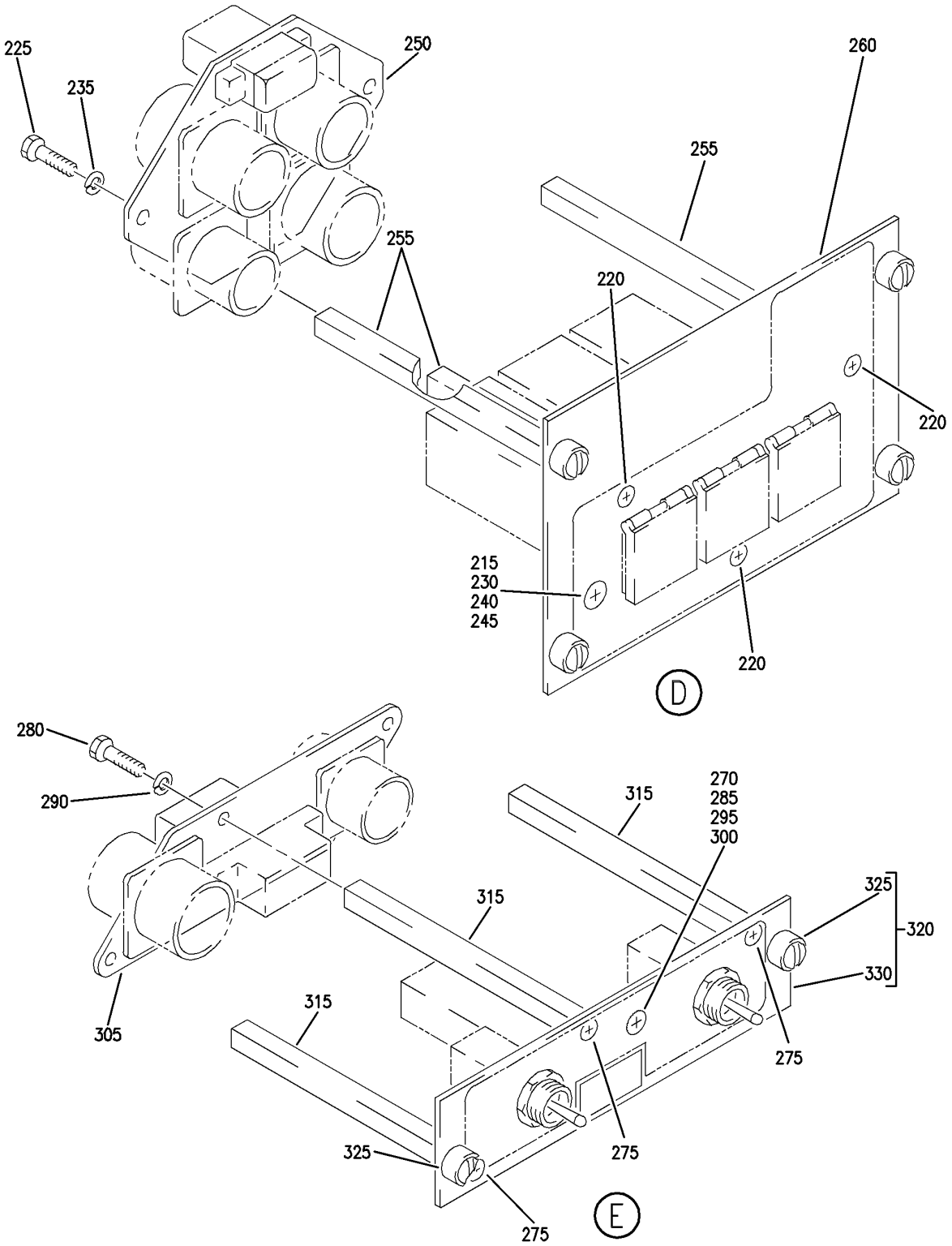

PANEL INSTL-P61 R SIDEWALL (PILOTS' RIGHT SIDE INSTRUMENT PANEL ONLY)
FIGURE 16 (SHEET 3)

BOEING PROPRIETARY - Copyright © - Unpublished Work - See title page for details.

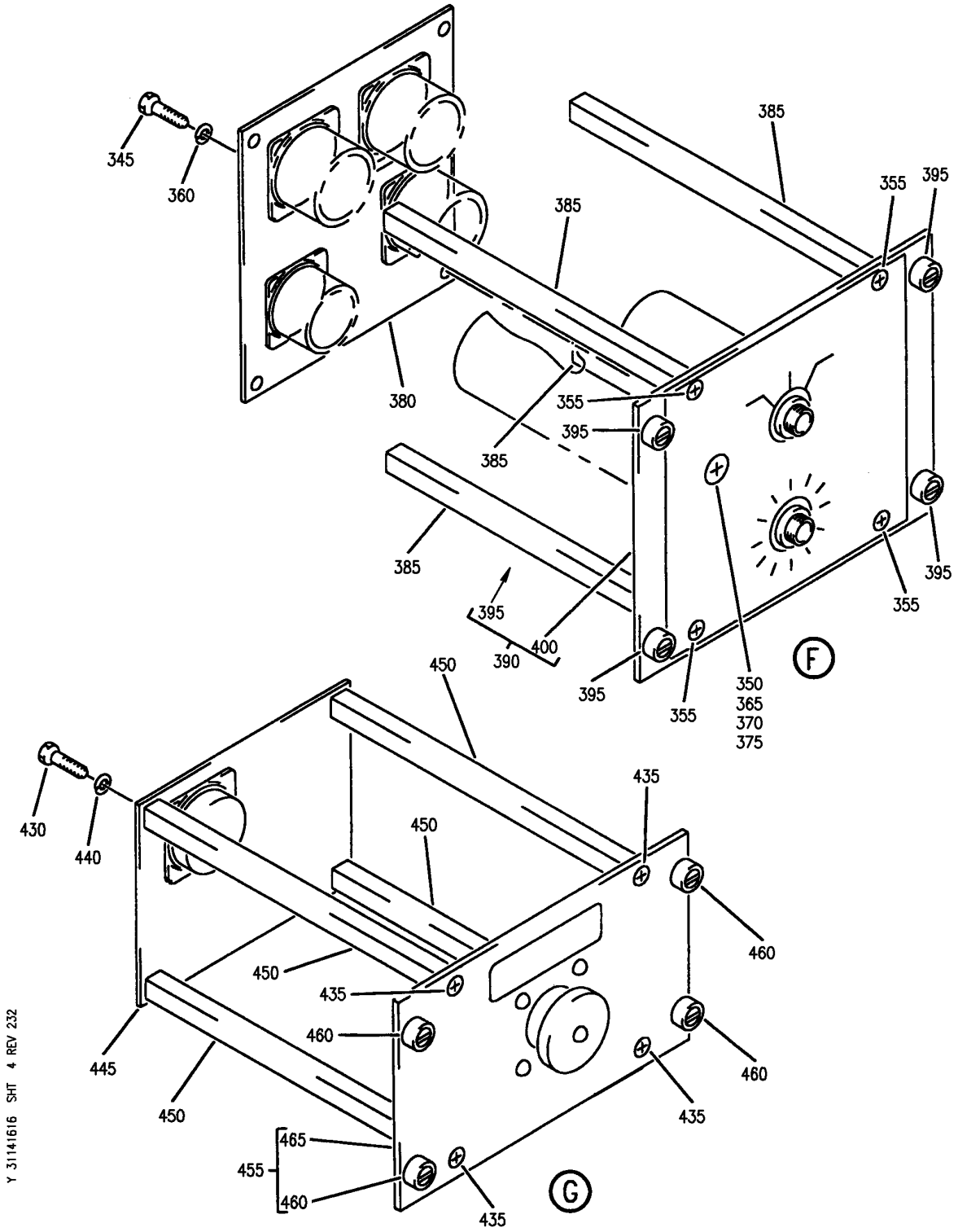

PANEL INSTL-P61 R SIDEWALL (PILOTS' RIGHT SIDE INSTRUMENT PANEL ONLY)
FIGURE 16 (SHEET 4)

BOEING PROPRIETARY - Copyright © - Unpublished Work - See title page for details.

FIG ITEM	PART NUMBER	1 2 3 4 5 6 7 NOMENCLATURE	EFFECT FROM TO	UNITS PER ASSY
16				
		PANEL INSTL-P61 R SIDEWALL	504903	
		(PILOTS' RIGHT SIDE		
		INSTRUMENT PANEL ONLY)		
- 1	233N7403-117	PANEL INSTL-P61 SIDEWALL	504903	RF
		(PILOTS' RIGHT SIDE		
		INSTRUMENT PANEL ONLY)		
		POSITION DATA:		
		R		
		FOR NHA/OTHER SYS DET SEE:		
		25-10-00-15B		
5	233N7501-23	.PANEL ASSY-TEST	504903	1
		SUPPLIER CODE:		
		V89954		
		NOT APPROVED FOR ETOPS.		
		ELECTRICAL EQUIP NUMBER:		
		M10398		
		COMPONENT MAINT MANUAL REF:		
		31-51-61		
		FOR OTHER SYS DETAILS SEE:		
		11-32-01-33		
		21-58-51-04		
		22-21-51-01		
		26-18-53-02		
		28-41-51-04		
		30-11-52-01		
		30-41-51-04		
		31-51-51-01		
		34-12-54-01		
		34-46-51-05		
10	NAS514P1032-8	..SCREW	504903	1
15	BACS12CB06-5	..SCREW	504903	3
20	NAS514P632-5	..SCREW	504903	3
25	AN960D416	..WASHER	504903	1
30	MS35338-41	..WASHER	504903	3

MISSING ITEM NUMBERS NOT APPLICABLE

- ITEM NOT ILLUSTRATED

BOEING PROPRIETARY - Copyright © - Unpublished Work - See title page for details.

FIG ITEM	PART NUMBER	1 2 3 4 5 6 7 NOMENCLATURE	EFFECT FROM TO	UNITS PER ASSY
16				
35	BRH10A3	..NUT	504903	1
		SUPPLIER CODE:		
		V52828		
		SPECIFICATION NUMBER:		
		BACN10JC3		
		OPTIONAL PART:		
		H10-3BAC		
		V15653		
		NS202101-02		
		V80539		
		RMLH9075-3W		
		V72962		
		VN303A02		
		V92215		
		96-02		
		V80539		
		T6S1032J		
		V11815		
40	MS20341-10A	..NUT	504903	1
45	233N3250-18	..BRACKET-SPRT	504903	1
50	69B46200-5	..STANDOFF	504903	3
55	233N7501-11	..BASEPLATE ASSY-	504903	1
		SUPPLIER CODE:		
		V89954		
60	BACS21DD1B	...STUD ASSY	504903	4
		SUPPLIER CODE:		
		V08524		
		SPECIFICATION NUMBER:		
		BACS21DD1B		
65	233N7501-12	...BASEPLATE-	504903	1
		SUPPLIER CODE:		
		V89954		
70	233N7506-1	.PANEL ASSY-SQUIB TEST	504903	1
		SUPPLIER CODE:		
		V89954		
		ELECTRICAL EQUIP NUMBER:		
		M10401		
		COMPONENT MAINT MANUAL REF:		
		26-21-52		
		FOR OTHER SYS DETAILS SEE:		
		11-32-01-33		
		26-21-52-01		
		26-22-52-01		
		26-23-52-03		
75	NAS514P1032-10	..SCREW	504903	1
80	NAS514P632-5	..SCREW	504903	3
85	BACS12CB06-5	..SCREW	504903	3
90	AN960D416	..WASHER	504903	1
95	MS35338-41	..WASHER	504903	3

MISSING ITEM NUMBERS NOT APPLICABLE

– ITEM NOT ILLUSTRATED

BOEING PROPRIETARY - Copyright © - Unpublished Work - See title page for details.

FIG ITEM	PART NUMBER	1 2 3 4 5 6 7 NOMENCLATURE	EFFECT FROM TO	UNITS PER ASSY
16				
100	BRH10A3	..NUT	504903	1
		SUPPLIER CODE:		
		V52828		
		SPECIFICATION NUMBER:		
		BACN10JC3		
		OPTIONAL PART:		
		H10-3BAC		
		V15653		
		NS202101-02		
		V80539		
		RMLH9075-3W		
		V72962		
		VN303A02		
		V92215		
		96-02		
		V80539		
		T6S1032J		
		V11815		
105	MS20341-10A	..NUT	504903	1
110	233N3250-24	..BRACKET-SPRT	504903	1
115	69B46200-5	..STANDOFF	504903	3
120	233N7506-2	..BASEPLATE ASSY-	504903	1
		SUPPLIER CODE:		
		V89954		
125	BACS21DD1B	...STUD ASSY	504903	4
		SUPPLIER CODE:		
		V08524		
		SPECIFICATION NUMBER:		
		BACS21DD1B		
130	233N7506-3	...BASEPLATE-	504903	1
		SUPPLIER CODE:		
		V89954		
135	233N7509-1	.PANEL ASSY-EICAS MAINT	504903	1
		SUPPLIER CODE:		
		V89954		
		ELECTRICAL EQUIP NUMBER:		
		M10372		
		COMPONENT MAINT MANUAL REF:		
		31-41-54		
		FOR OTHER SYS DETAILS SEE:		
		11-32-01-33		
		31-41-53-01		
145	NAS514P632-5	..SCREW	504903	3
150	BACS12HN06-5	..SCREW-	504903	3
160	MS35338-41	..WASHER-	504903	3
		OPTIONAL PART:		
		BACW10EC06S		

MISSING ITEM NUMBERS NOT APPLICABLE

– ITEM NOT ILLUSTRATED

BOEING PROPRIETARY - Copyright © - Unpublished Work - See title page for details.

FIG ITEM	PART NUMBER	1 2 3 4 5 6 7 NOMENCLATURE	EFFECT FROM TO	UNITS PER ASSY
16				
160	BACW10EC06S	..WASHER-	504903	3
		OPTIONAL PART:		
		MS35338-41		
175	233N3250-5	..BRACKET-SPRT	504903	1
180	69B46200-6	..STANDOFF	504903	3
185	233N7509-2	..BASEPLATE ASSY-	504903	1
		SUPPLIER CODE:		
		V89954		
190	BACS21DD1B	...STUD ASSY	504903	4
		SUPPLIER CODE:		
		V08524		
		SPECIFICATION NUMBER:		
		BACS21DD1B		
195	233N7509-3	...BASEPLATE-	504903	1
		SUPPLIER CODE:		
		V89954		
200	BACP10U0187T	.PANEL ASSY	504903	1
205	233N7503-56	.PANEL ASSY-GEN FIELD AND	504903	1
		HYDR		
		SUPPLIER CODE:		
		V89954		
		ELECTRICAL EQUIP NUMBER:		
		M10191		
		COMPONENT MAINT MANUAL REF:		
		24-22-73		
		FOR OTHER SYS DETAILS SEE:		
		11-32-01-33		
		24-22-73-02		
		27-23-51-01		
215	NAS514P1032-10	..SCREW	504903	1
220	NAS514P1032-5	..SCREW-	504903	3
		OPTIONAL PART:		
		FH6C5CPL12BN		
		V12324		
220	FH6C5CPL12BN	..SCREW-	504903	3
		SUPPLIER CODE:		
		V12324		
		OPTIONAL PART:		
		NAS514P1032-5		
225	MS51957-27	..SCREW	504903	3
230	NAS1149D0463H	..WASHER	504903	1
235	MS35338-136	..WASHER-	504903	3
		OPTIONAL PART:		
		BACW10EC06CD		
235	BACW10EC06CD	..WASHER-	504903	3
		OPTIONAL PART:		
		MS35338-136		
240	MS35650-305T	..NUT	504903	1

MISSING ITEM NUMBERS NOT APPLICABLE

— ITEM NOT ILLUSTRATED

BOEING PROPRIETARY - Copyright © - Unpublished Work - See title page for details.

FIG ITEM	PART NUMBER	1 2 3 4 5 6 7 NOMENCLATURE	EFFECT FROM TO	UNITS PER ASSY
16				
245	BRH10C3D	..NUT	504903	1
		SUPPLIER CODE:		
		V52828		
		SPECIFICATION NUMBER:		
		BACN10JC3CD		
		OPTIONAL PART:		
		T6C1032JCD		
		V11815		
		NS202486-02		
		V80539		
		102LH9075-3W		
		V72962		
		H51650-3BAC		
		V15653		
250	233N3250-42	..BRACKET-SPRT	504903	1
255	69B46200-12	..STANDOFF	504903	3
260	233N7503-58	..BASEPLATE ASSY-	504903	1
		SUPPLIER CODE:		
		V89954		
		ALTERED FROM PART NUMBER:		
		BACP10U0375T		
		MANUFACTURED FROM:		
		BACP10U0375T		
265	233N7508-14	.PANEL ASSY-FLIGHT	504903	1
		RECORDER/SVCE INTPH		
		SUPPLIER CODE:		
		V89954		
		ELECTRICAL EQUIP NUMBER:		
		M00033		
		COMPONENT MAINT MANUAL REF:		
		31-31-52		
		FOR OTHER SYS DETAILS SEE:		
		11-32-01-33		
		23-41-52-01		
		31-31-04-01		
265	233N7508-9	.PANEL ASSY-FLIGHT	504903	1
		RECORDER/SVCE INTPH		
		SUPPLIER CODE:		
		V89954		
		ELECTRICAL EQUIP NUMBER:		
		M00033		
		COMPONENT MAINT MANUAL REF:		
		31-31-52		
		FOR OTHER SYS DETAILS SEE:		
		11-32-01-33		
		23-41-52-01		
		31-31-04-01		
270	NAS514P1032-10	..SCREW	504903	1
275	NAS514P632-5	..SCREW	504903	3

MISSING ITEM NUMBERS NOT APPLICABLE

– ITEM NOT ILLUSTRATED

BOEING PROPRIETARY - Copyright © - Unpublished Work - See title page for details.

FIG ITEM	PART NUMBER	1 2 3 4 5 6 7 NOMENCLATURE	EFFECT FROM TO	UNITS PER ASSY
16				
280	BACS12CB06-5	..SCREW-	504903	3
		USED ON:		
		233N7508-9		
280	NAS1801-06-5	..SCREW-	504903	3
		USED ON:		
		233N7508-14		
285	AN960D416	..WASHER-	504903	1
		USED ON:		
		233N7508-9		
285	NAS1149D0463H	..WASHER-	504903	1
		USED ON:		
		233N7508-14		
290	MS35338-41	..WASHER-	504903	3
		USED ON:		
		233N7508-9		
290	BACW10EC06S	..WASHER-	504903	3
		USED ON:		
		233N7508-14		
295	BRH10A3	..NUT-	504903	1
		SUPPLIER CODE:		
		V52828		
		SPECIFICATION NUMBER:		
		BACN10JC3		
		OPTIONAL PART:		
		H10-3BAC		
		V15653		
		NS202101-02		
		V80539		
		RMLH9075-3W		
		V72962		
		VN303A02		
		V92215		
		96-02		
		V80539		
		T6S1032J		
		V11815		
		USED ON:		
		233N7508-9		

MISSING ITEM NUMBERS NOT APPLICABLE

– ITEM NOT ILLUSTRATED

BOEING PROPRIETARY - Copyright © - Unpublished Work - See title page for details.

FIG ITEM	PART NUMBER	1 2 3 4 5 6 7 NOMENCLATURE	EFFECT FROM TO	UNITS PER ASSY
16				
295	BRH10C3D	..NUT-	504903	1
		SUPPLIER CODE:		
		V52828		
		SPECIFICATION NUMBER:		
		BACN10JC3CD		
		OPTIONAL PART:		
		T6C1032JCD		
		V11815		
		NS202486-02		
		V80539		
		102LH9075-3W		
		V72962		
		H51650-3BAC		
		V15653		
		USED ON:		
		233N7508-14		
300	MS20341-10A	..NUT-	504903	1
		USED ON:		
		233N7508-9		
300	MS35650-305T	..NUT-	504903	1
		USED ON:		
		233N7508-14		
305	233N7508-4	..BRACKET ASSY-	504903	1
		SUPPLIER CODE:		
		V89954		
315	69B46200-8	..STANDOFF	504903	3
320	233N7508-2	..BASEPLATE ASSY-	504903	1
		SUPPLIER CODE:		
		V89954		
325	BACS21DD1B	...STUD ASSY	504903	2
		SUPPLIER CODE:		
		V08524		
		SPECIFICATION NUMBER:		
		BACS21DD1B		
330	233N7508-3	...BASEPLATE-	504903	1
		SUPPLIER CODE:		
		V89954		
335	233N7500-305	.PANEL ASSY-AIRBORNE DATA LOADER	504903	1
		SUPPLIER CODE:		
		V89954		
		ELECTRICAL EQUIP NUMBER:		
		M01737		
		COMPONENT MAINT MANUAL REF:		
		34-61-03		
		FOR OTHER SYS DETAILS SEE:		
		11-32-01-33		
		34-61-53-03		

MISSING ITEM NUMBERS NOT APPLICABLE

– ITEM NOT ILLUSTRATED

BOEING PROPRIETARY - Copyright © - Unpublished Work - See title page for details.

FIG ITEM	PART NUMBER	1 2 3 4 5 6 7 NOMENCLATURE	EFFECT FROM TO	UNITS PER ASSY
16				
- 340	233N7500-13	..PANEL ASSY- SUPPLIER CODE: V89954	504903	RF
345	MS51957-27	...SCREW	504903	4
350	NAS51491032-10	...SCREW	504903	1
355	FH6C5CPL12BN	...SCREW- SUPPLIER CODE: V12324	504903	4
360	MS35338-136	...WASHER	504903	4
365	AN960D416	...WASHER	504903	1
370	MS35650-305T	...NUT	504903	1
375	MS21042L3	...NUT	504903	1
380	233T6200-228	...BRACKET-SPRT	504903	1
385	69B46200-19	...STANDOFF	504903	4
390	233N7500-14	...BASEPLATE ASSY- SUPPLIER CODE: V89954	504903	1
395	PFSC35-38ASEMB	....STUD ASSY SUPPLIER CODE: V72794 SPECIFICATION NUMBER: BACS21DX1B	504903	4
400	233N7500-15	....BASEPLATE- SUPPLIER CODE: V89954	504903	1
415	233N7519-300	.PANEL ASSY-DATA TRANSFER UNIT RCPT SUPPLIER CODE: V89954 ELECTRICAL EQUIP NUMBER: M01736 COMPONENT MAINT MANUAL REF: 34-61-04 FOR OTHER SYS DETAILS SEE: 34-61-53-03	504903	1
- 425	233N7519-1	..MODULE ASSY- SUPPLIER CODE: V89954	504903	RF
430	MS51957-27	...SCREW	504903	4
435	FH6C5CPL12BN	...SCREW- SUPPLIER CODE: V12324	504903	4
440	MS35338-136	...WASHER	504903	4
445	233A7204-402	...BRACKET-SPRT SUPPLIER CODE: V89954	504903	1
450	69B46200-19	...STANDOFF	504903	4

MISSING ITEM NUMBERS NOT APPLICABLE

- ITEM NOT ILLUSTRATED

BOEING PROPRIETARY - Copyright © - Unpublished Work - See title page for details.

FIG ITEM	PART NUMBER	1 2 3 4 5 6 7 NOMENCLATURE	EFFECT FROM TO	UNITS PER ASSY
16				
455	233N7519-2	...BASEPLATE ASSY-	504903	1
		SUPPLIER CODE:		
		V89954		
460	PFSC35-38ASEMB	....STUD ASSY	504903	4
		SUPPLIER CODE:		
		V72794		
		SPECIFICATION NUMBER:		
		BACS21DX1B		
465	BACP10U0375N	....PANEL ASSY	504903	1
470	BACP10U0112T	.PANEL ASSY	504903	1

MISSING ITEM NUMBERS NOT APPLICABLE

— ITEM NOT ILLUSTRATED

BOEING PROPRIETARY - Copyright © - Unpublished Work - See title page for details.

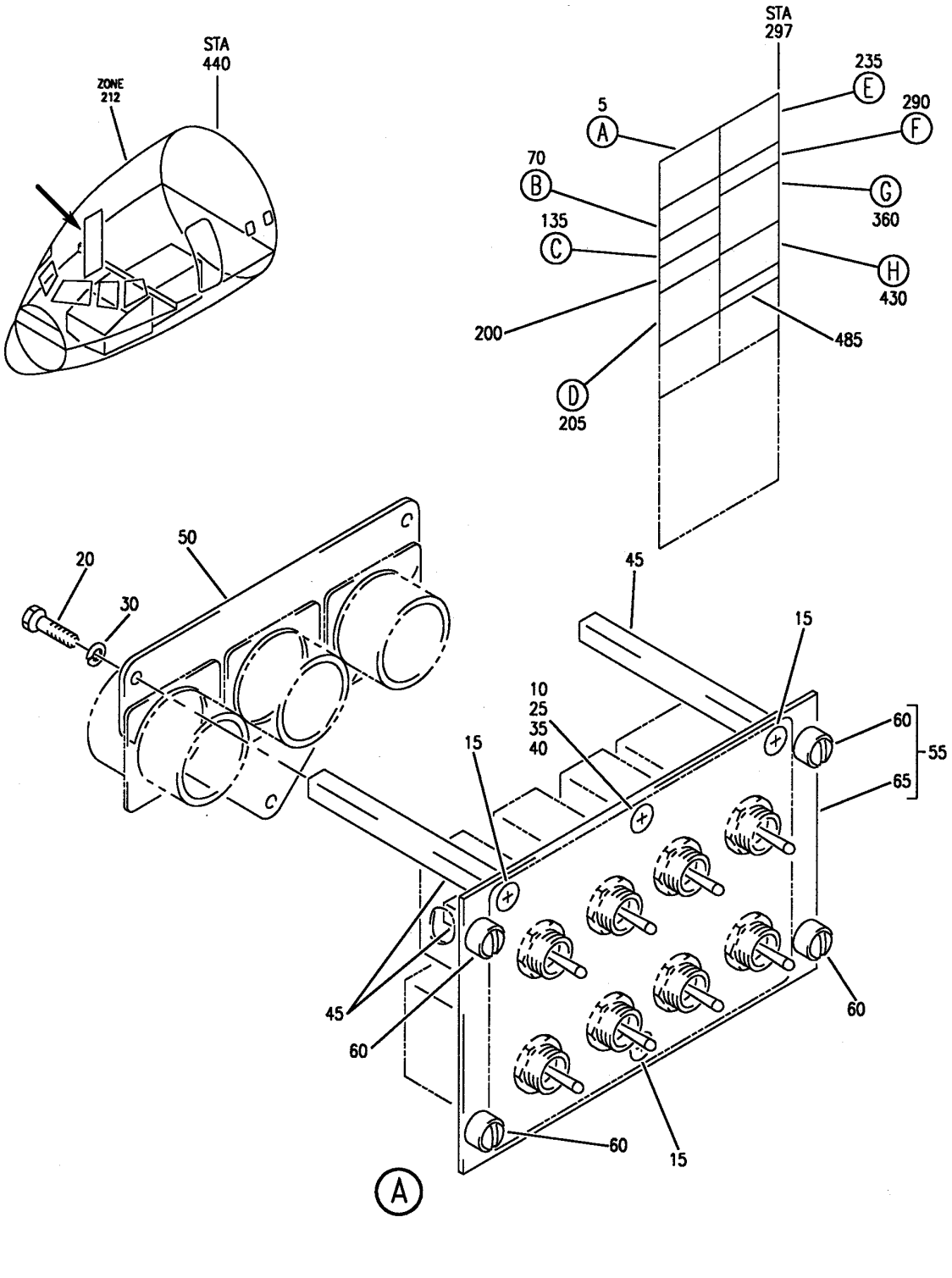

PANEL INSTL-P61 R SIDEWALL (PILOTS' RIGHT SIDE INSTRUMENT PANEL ONLY)
FIGURE 26 (SHEET 1)

BOEING PROPRIETARY - Copyright © - Unpublished Work - See title page for details.

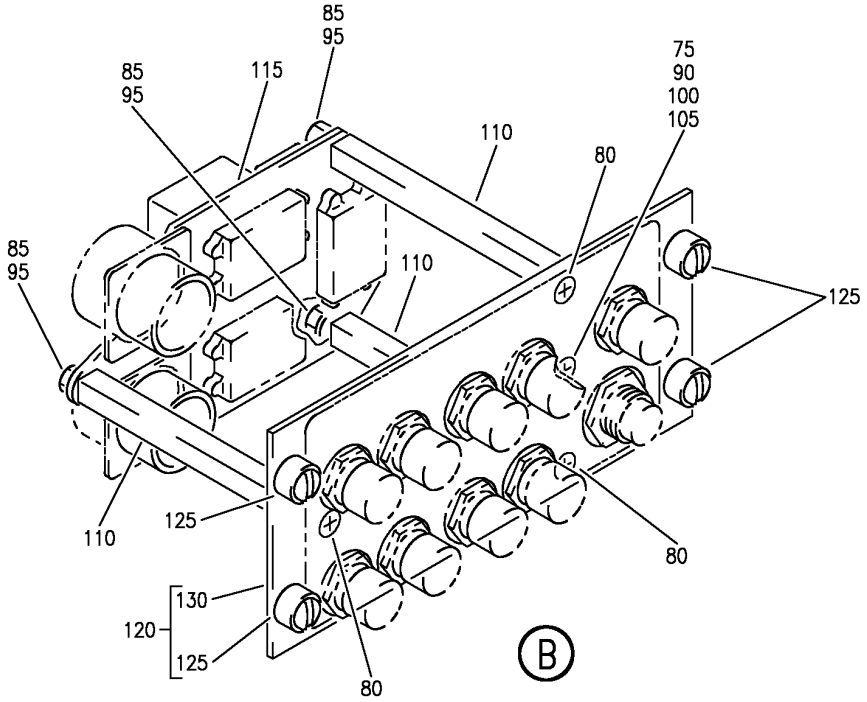

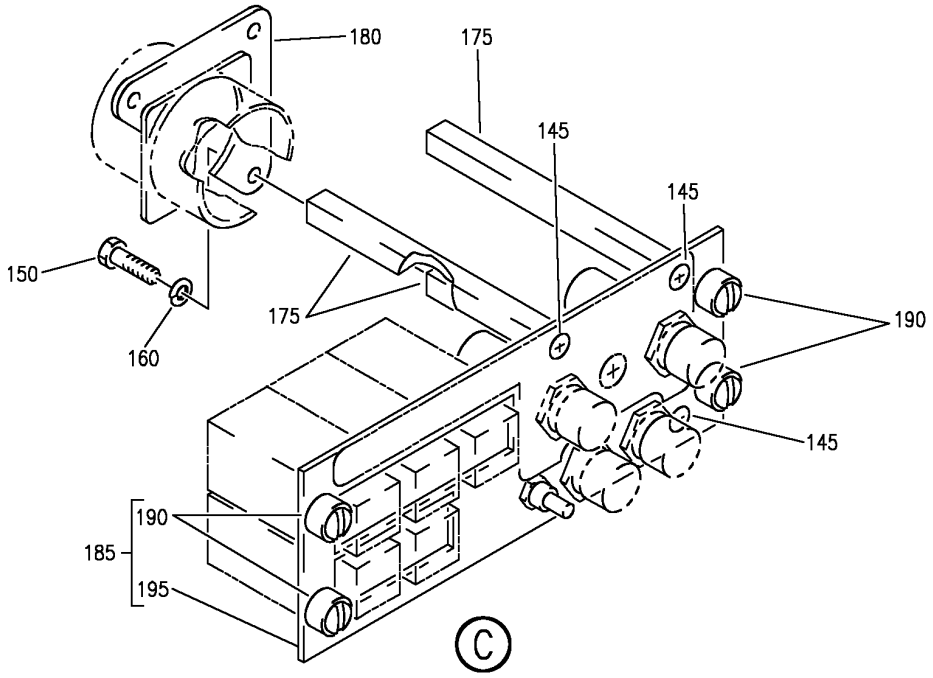

Y 31141626 SHT 2 REV 266

PANEL INSTL-P61 R SIDEWALL (PILOTS' RIGHT SIDE INSTRUMENT PANEL ONLY)
FIGURE 26 (SHEET 2)

BOEING PROPRIETARY - Copyright © - Unpublished Work - See title page for details.

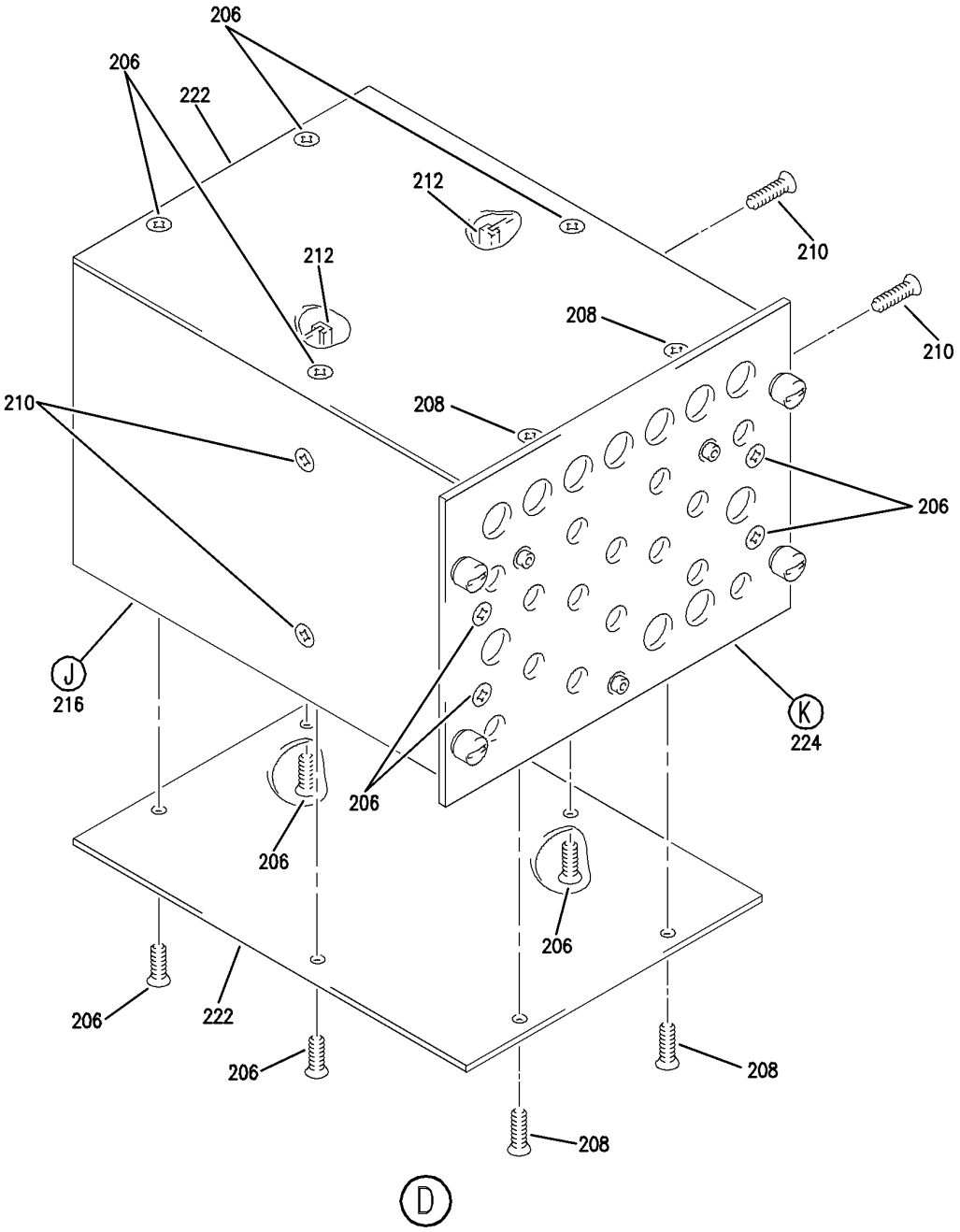

Y 31141626 SHT 3 REV 236

PANEL INSTL-P61 R SIDEWALL (PILOTS' RIGHT SIDE INSTRUMENT PANEL ONLY)
FIGURE 26 (SHEET 3)

BOEING PROPRIETARY - Copyright © - Unpublished Work - See title page for details.

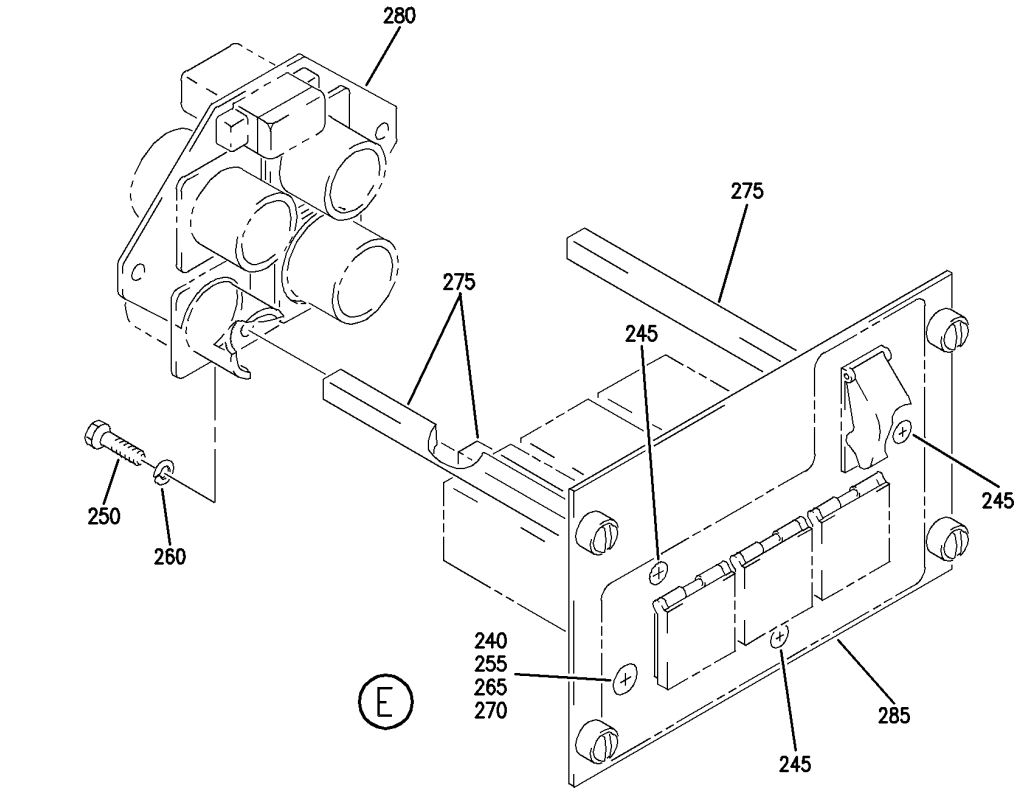

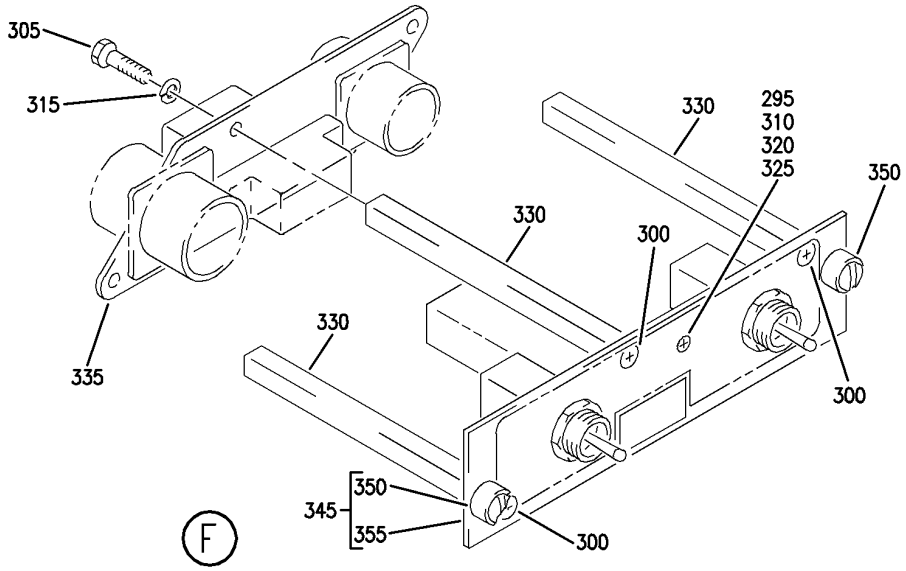

Y 31141626 SHT 4 REV 231

PANEL INSTL-P61 R SIDEWALL (PILOTS' RIGHT SIDE INSTRUMENT PANEL ONLY)
FIGURE 26 (SHEET 4)

BOEING PROPRIETARY - Copyright © - Unpublished Work - See title page for details.

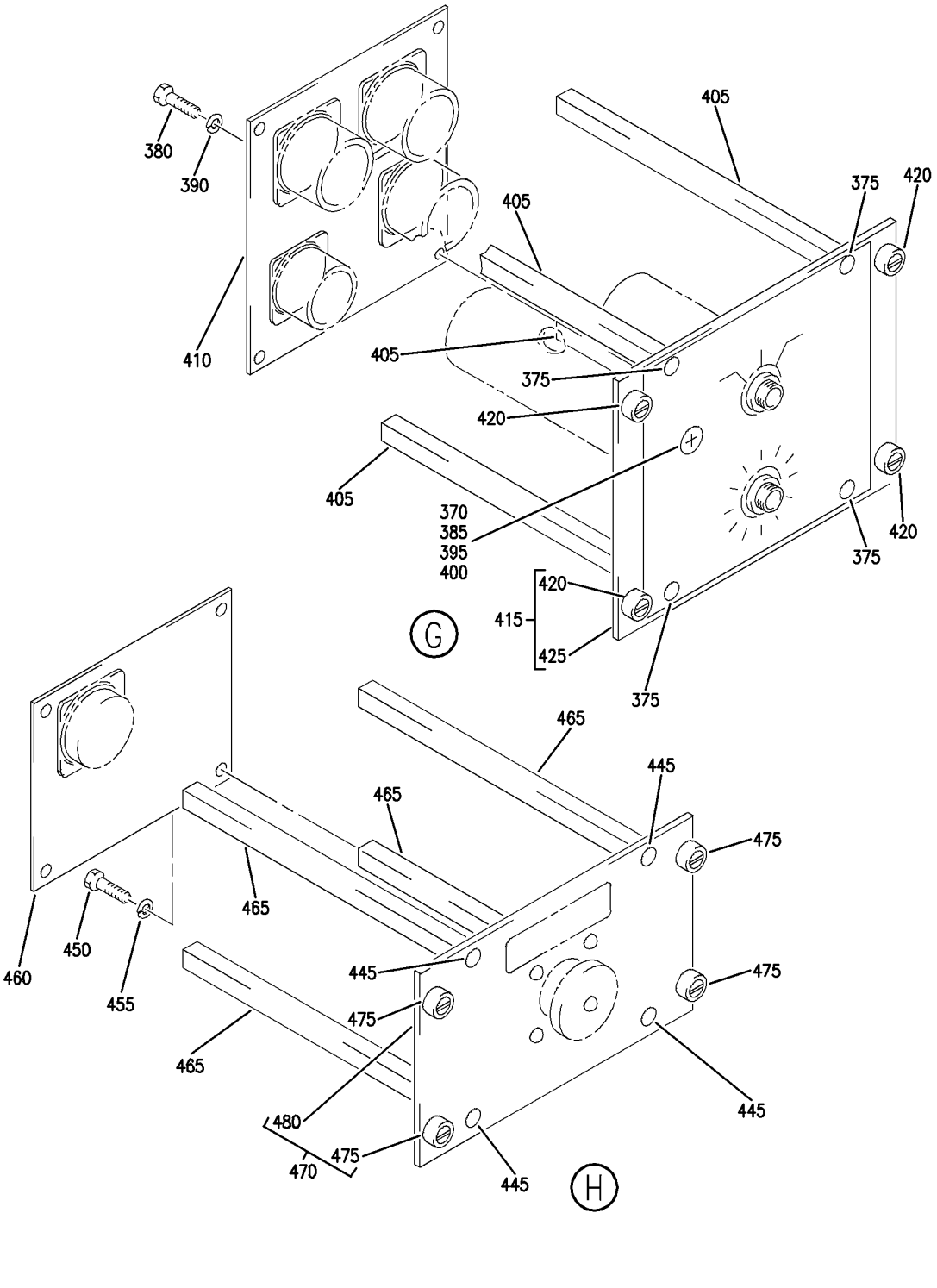

PANEL INSTL-P61 R SIDEWALL (PILOTS' RIGHT SIDE INSTRUMENT PANEL ONLY)
FIGURE 26 (SHEET 5)

BOEING PROPRIETARY - Copyright © - Unpublished Work - See title page for details.

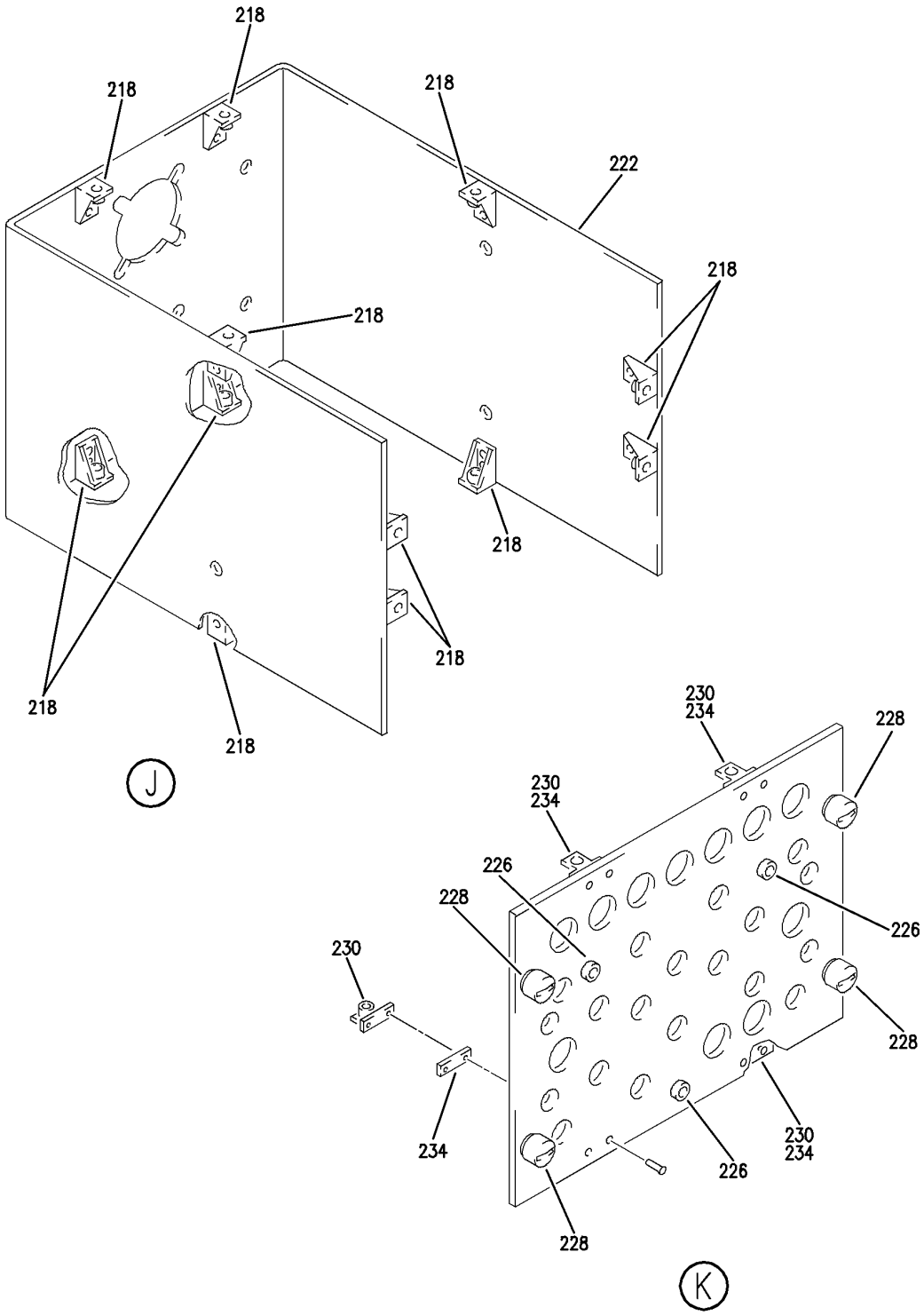

PANEL INSTL-P61 R SIDEWALL (PILOTS' RIGHT SIDE INSTRUMENT PANEL ONLY)
FIGURE 26 (SHEET 6)

BOEING PROPRIETARY - Copyright © - Unpublished Work - See title page for details.

FIG ITEM	PART NUMBER	1 2 3 4 5 6 7 NOMENCLATURE	EFFECT FROM TO	UNITS PER ASSY
26				
		PANEL INSTL-P61 R SIDEWALL	102102	
		(PILOTS' RIGHT SIDE		
		INSTRUMENT PANEL ONLY)		
- 1	233N7403-128	PANEL INSTL-P61 SIDEWALL	102102	RF
		(PILOTS' RIGHT SIDE		
		INSTRUMENT PANEL ONLY)		
		POSITION DATA:		
		R		
		FOR NHA/OTHER SYS DET SEE:		
		25-10-00-15B		
5	233N7501-36	.PANEL ASSY-TEST	102102	1
		SUPPLIER CODE:		
		V89954		
		ELECTRICAL EQUIP NUMBER:		
		M10398		
		COMPONENT MAINT MANUAL REF:		
		31-51-61		
		FOR OTHER SYS DETAILS SEE:		
		29-22-52-01		
		30-11-52-01		
		30-41-51-04		
		31-51-51-01		
		34-12-54-01		
		34-46-51-05		
		21-58-51-04		
		22-21-51-01		
		26-18-53-02		
		28-41-51-04		
		11-32-01-37		
5	233N7501-35	.PANEL ASSY-TEST	102102	1
		SUPPLIER CODE:		
		V89954		
		ELECTRICAL EQUIP NUMBER:		
		M10398		
		COMPONENT MAINT MANUAL REF:		
		31-51-61		
		FOR OTHER SYS DETAILS SEE:		
		29-22-52-01		
		30-11-52-01		
		30-41-51-04		
		31-51-51-01		
		34-12-54-01		
		34-46-51-05		
		21-58-51-04		
		22-21-51-01		
		26-18-53-02		
		28-41-51-04		
		11-32-01-37		
10	NAS514P1032-8	..SCREW	102102	1

MISSING ITEM NUMBERS NOT APPLICABLE

- ITEM NOT ILLUSTRATED

BOEING PROPRIETARY - Copyright © - Unpublished Work - See title page for details.

FIG ITEM	PART NUMBER	1 2 3 4 5 6 7 NOMENCLATURE	EFFECT FROM TO	UNITS PER ASSY
26				
15	NAS514P632-5	..SCREW	102102	3
20	BACS12CB06-5	..SCREW	102102	3
25	AN960D416	..WASHER	102102	1
30	MS35338-41	..WASHER	102102	3
35	MS20341-10A	..NUT	102102	1
40	BRH10A3	..NUT	102102	1
		SUPPLIER CODE:		
		V52828		
		SPECIFICATION NUMBER:		
		BACN10JC3		
		OPTIONAL PART:		
		H10-3BAC		
		V15653		
		NS202101-02		
		V80539		
		RMLH9075-3W		
		V72962		
		VN303A02		
		V92215		
		96-02		
		V80539		
		T6S1032J		
		V11815		
45	69B46200-5	..STANDOFF	102102	3
50	233N3250-18	..BRACKET	102102	1
55	233N7501-11	..BASEPLATE ASSY-	102102	1
		SUPPLIER CODE:		
		V89954		
60	BACS21DD1B	...STUD ASSY	102102	4
		SUPPLIER CODE:		
		V08524		
		SPECIFICATION NUMBER:		
		BACS21DD1B		
65	233N7501-12	...BASEPLATE-	102102	1
		SUPPLIER CODE:		
		V89954		
70	233N7506-1	.PANEL ASSY-SQUIB TEST	102102	1
		SUPPLIER CODE:		
		V89954		
		ELECTRICAL EQUIP NUMBER:		
		M10401		
		COMPONENT MAINT MANUAL REF:		
		26-21-52		
		FOR OTHER SYS DETAILS SEE:		
		11-32-01-37		
		26-21-52-01		
		26-22-52-01		
		26-23-52-03		
75	NAS514P1032-10	..SCREW	102102	1

MISSING ITEM NUMBERS NOT APPLICABLE

— ITEM NOT ILLUSTRATED

BOEING PROPRIETARY - Copyright © - Unpublished Work - See title page for details.

FIG ITEM	PART NUMBER	1 2 3 4 5 6 7 NOMENCLATURE	EFFECT FROM TO	UNITS PER ASSY
26				
80	NAS514P632-5	..SCREW	102102	3
85	BACS12CB06-5	..SCREW	102102	3
90	AN960D416	..WASHER	102102	1
95	MS35338-41	..WASHER	102102	3
100	MS20341-10A	..NUT	102102	1
105	BRH10A3	..NUT	102102	1
		SUPPLIER CODE:		
		V52828		
		SPECIFICATION NUMBER:		
		BACN10JC3		
		OPTIONAL PART:		
		H10-3BAC		
		V15653		
		NS202101-02		
		V80539		
		RMLH9075-3W		
		V72962		
		VN303A02		
		V92215		
		96-02		
		V80539		
		T6S1032J		
		V11815		
110	69B46200-5	..STANDOFF	102102	3
115	233N3250-24	..BRACKET	102102	1
120	233N7506-2	..BASEPLATE ASSY-	102102	1
		SUPPLIER CODE:		
		V89954		
125	BACS21DD1B	...STUD ASSY	102102	4
		SUPPLIER CODE:		
		V08524		
		SPECIFICATION NUMBER:		
		BACS21DD1B		
130	233N7506-3	...BASEPLATE-	102102	1
		SUPPLIER CODE:		
		V89954		
135	233N7509-1	.PANEL ASSY-EICAS MAINT	102102	1
		SUPPLIER CODE:		
		V89954		
		ELECTRICAL EQUIP NUMBER:		
		M10372		
		COMPONENT MAINT MANUAL REF:		
		31-41-54		
		FOR OTHER SYS DETAILS SEE:		
		11-32-01-37		
		31-41-53-01		
145	NAS514P632-5	..SCREW	102102	3
150	BACS12HN06-5	..SCREW-	102102	3

MISSING ITEM NUMBERS NOT APPLICABLE

– ITEM NOT ILLUSTRATED

BOEING PROPRIETARY - Copyright © - Unpublished Work - See title page for details.

FIG ITEM	PART NUMBER	1 2 3 4 5 6 7 NOMENCLATURE	EFFECT FROM TO	UNITS PER ASSY
26				
160	MS35338-41	..WASHER-	102102	3
		OPTIONAL PART:		
		BACW10EC06S		
160	BACW10EC06S	..WASHER-	102102	3
		OPTIONAL PART:		
		MS35338-41		
175	69B46200-6	..STANDOFF	102102	3
180	233N3250-5	..BRACKET	102102	1
185	233N7509-2	..BASEPLATE ASSY-	102102	1
		SUPPLIER CODE:		
		V89954		
190	BACS21DD1B	...STUD ASSY	102102	4
		SUPPLIER CODE:		
		V08524		
		SPECIFICATION NUMBER:		
		BACS21DD1B		
195	233N7509-3	...BASEPLATE-	102102	1
		SUPPLIER CODE:		
		V89954		
200	BACP10U0187T	.PANEL ASSY	102102	1
205	285T0022-44	.PANEL ASSY-AUDIO SELECTOR	102102	1
		SUPPLIER CODE:		
		V89954		
		ELECTRICAL EQUIP NUMBER:		
		M10216		
		COMPONENT MAINT MANUAL REF:		
		23-51-54		
		FOR OTHER SYS DETAILS SEE:		
		23-51-01-04		
		33-13-61-02		
206	NAS514P440-5	..SCREW	102102	12
208	NAS514P632-5	..SCREW	102102	4
210	NAS514P440-4	..SCREW	102102	4
212	BACG20ZA350	..GROMMET	102102	2
214	285T0179-47	..PANEL-	102102	2
		SUPPLIER CODE:		
		V89954		
216	285T0179-48	..CHASSIS ASSY-	102102	1
		SUPPLIER CODE:		
		V89954		
218	F22A27M22-40	...NUT-ANCHOR	102102	12
		SUPPLIER CODE:		
		V0217B		
		OPTIONAL PART:		
		A27M88-04		
		V62554		

MISSING ITEM NUMBERS NOT APPLICABLE

— ITEM NOT ILLUSTRATED

BOEING PROPRIETARY - Copyright © - Unpublished Work - See title page for details.

FIG ITEM	PART NUMBER	1 2 3 4 5 6 7 NOMENCLATURE	EFFECT FROM TO	UNITS PER ASSY
26				
218	A27M88-04	...NUT-ANCHOR SUPPLIER CODE: V62554 OPTIONAL PART: F22A27M22-40 V0271B ATTACHING PARTS	102102	12
- 220	BACR15BA2AD	...RIVET- SIZE DETERMINED ON INSTL. -------*-------	102102	24
222	285T0179-24	...CHASSIS- SUPPLIER CODE: V89954	102102	1
224	285T0179-43	..PANEL ASSY-FRONT SUPPLIER CODE: V89954	102102	1
226	SF6G6CBB5D	...NUT SUPPLIER CODE: V12324 SPECIFICATION NUMBER: BACN10PA06-6	102102	3
228	D1400-6A1	...STUD ASSY SUPPLIER CODE: V08524 SPECIFICATION NUMBER: BACS21DD1	102102	4
230	F19716-06	...NUT-ANCHOR SUPPLIER CODE: V15653 ATTACHING PARTS	102102	4
- 232	BACR15BA2AD	...RIVET- SIZE DETERMINED ON INSTL. -------*-------	102102	8
234	285T0179-45	...SPACER- SUPPLIER CODE: V89954	102102	4
235	233N7503-56	.PANEL ASSY-GEN FIELD AND HYDR SUPPLIER CODE: V89954 ELECTRICAL EQUIP NUMBER: M10191 COMPONENT MAINT MANUAL REF: 24-22-73 FOR OTHER SYS DETAILS SEE: 11-32-01-37 24-22-73-02 27-23-51-01 29-22-52-01	102102	1

MISSING ITEM NUMBERS NOT APPLICABLE

- ITEM NOT ILLUSTRATED

BOEING PROPRIETARY - Copyright © - Unpublished Work - See title page for details.

FIG ITEM	PART NUMBER	1 2 3 4 5 6 7 NOMENCLATURE	EFFECT FROM TO	UNITS PER ASSY
26				
240	NAS514P1032-10	..SCREW	102102	1
245	NAS514P1032-5	..SCREW-	102102	3
		OPTIONAL PART:		
		FH6C5CPL12BN		
		V12324		
245	FH6C5CPL12BN	..SCREW-	102102	3
		SUPPLIER CODE:		
		V12324		
		OPTIONAL PART:		
		NAS514P1032-5		
250	MS51957-27	..SCREW	102102	3
255	NAS1149D0463H	..WASHER	102102	1
260	MS35338-136	..WASHER-	102102	3
		OPTIONAL PART:		
		BACW10EC06CD		
260	BACW10EC06CD	..WASHER-	102102	3
		OPTIONAL PART:		
		MS35338-136		
265	MS35650-305T	..NUT	102102	1
270	BRH10C3D	..NUT	102102	1
		SUPPLIER CODE:		
		V52828		
		SPECIFICATION NUMBER:		
		BACN10JC3CD		
		OPTIONAL PART:		
		T6C1032JCD		
		V11815		
		NS202486-02		
		V80539		
		102LH9075-3W		
		V72962		
		H51650-3BAC		
		V15653		
275	69B46200-12	..STANDOFF	102102	3
280	233N3250-42	..BRACKET	102102	1
285	233N7503-58	..BASEPLATE ASSY-	102102	1
		SUPPLIER CODE:		
		V89954		
		ALTERED FROM PART NUMBER:		
		BACP10U0375T		
		MANUFACTURED FROM:		
		BACP10U0375T		

MISSING ITEM NUMBERS NOT APPLICABLE

– ITEM NOT ILLUSTRATED

BOEING PROPRIETARY - Copyright © - Unpublished Work - See title page for details.

FIG ITEM	PART NUMBER	1 2 3 4 5 6 7 NOMENCLATURE	EFFECT FROM TO	UNITS PER ASSY
26				
290	233N7508-14	.PANEL ASSY-FLIGHT RECORDER/SVCE INTPH SUPPLIER CODE: V89954 ELECTRICAL EQUIP NUMBER: M00033 COMPONENT MAINT MANUAL REF: 31-31-52 FOR OTHER SYS DETAILS SEE: 23-41-52-01 31-31-04-01 11-32-01-37	102102	1
290	233N7508-9	.PANEL ASSY-FLIGHT RECORDER/SVCE INTPH SUPPLIER CODE: V89954 ELECTRICAL EQUIP NUMBER: M00033 COMPONENT MAINT MANUAL REF: 31-31-52 FOR OTHER SYS DETAILS SEE: 11-32-01-37 23-41-52-01 31-31-04-01	102102	1
295	NAS514P1032-10	..SCREW	102102	1
300	NAS514P632-5	..SCREW	102102	3
305	BACS12CB06-5	..SCREW- USED ON: 233N7508-9	102102	3
305	NAS1801-06-5	..SCREW- USED ON: 233N7508-14	102102	3
310	AN960D416	..WASHER- USED ON: 233N7508-9	102102	1
310	NAS1149D0463H	..WASHER- USED ON: 233N7508-14	102102	1
315	MS35338-41	..WASHER- USED ON: 233N7508-9	102102	3
315	BACW10EC06S	..WASHER- USED ON: 233N7508-14	102102	3
320	MS20341-10A	..NUT- USED ON: 233N7508-9	102102	1

MISSING ITEM NUMBERS NOT APPLICABLE

– ITEM NOT ILLUSTRATED

BOEING PROPRIETARY - Copyright © - Unpublished Work - See title page for details.

FIG ITEM	PART NUMBER	1 2 3 4 5 6 7 NOMENCLATURE	EFFECT FROM TO	UNITS PER ASSY
26				
320	MS35650-305T	..NUT-	102102	1
		USED ON:		
		233N7508-14		
325	BRH10A3	..NUT-	102102	1
		SUPPLIER CODE:		
		V52828		
		SPECIFICATION NUMBER:		
		BACN10JC3		
		OPTIONAL PART:		
		H10-3BAC		
		V15653		
		NS202101-02		
		V80539		
		RMLH9075-3W		
		V72962		
		VN303A02		
		V92215		
		96-02		
		V80539		
		T6S1032J		
		V11815		
		USED ON:		
		233N7508-9		
325	BRH10C3D	..NUT-	102102	1
		SUPPLIER CODE:		
		V52828		
		SPECIFICATION NUMBER:		
		BACN10JC3CD		
		OPTIONAL PART:		
		T6C1032JCD		
		V11815		
		NS202486-02		
		V80539		
		102LH9075-3W		
		V72962		
		H51650-3BAC		
		V15653		
		USED ON:		
		233N7508-14		
330	69B46200-8	..STANDOFF	102102	3
335	233N7508-4	..BRACKET ASSY-	102102	1
		SUPPLIER CODE:		
		V89954		
345	233N7508-2	..BASEPLATE ASSY-	102102	1
		SUPPLIER CODE:		
		V89954		

MISSING ITEM NUMBERS NOT APPLICABLE

— ITEM NOT ILLUSTRATED

BOEING PROPRIETARY - Copyright © - Unpublished Work - See title page for details.

FIG ITEM	PART NUMBER	1 2 3 4 5 6 7 NOMENCLATURE	EFFECT FROM TO	UNITS PER ASSY
26				
350	BACS21DD1B	...STUD ASSY SUPPLIER CODE: V08524 SPECIFICATION NUMBER: BACS21DD1B	102102	2
355	233N7508-3	...BASEPLATE- SUPPLIER CODE: V89954	102102	1
360	233N7500-305	.PANEL ASSY-AIRBORNE DATA LOADER SUPPLIER CODE: V89954 ELECTRICAL EQUIP NUMBER: M01737 COMPONENT MAINT MANUAL REF: 34-61-03 FOR OTHER SYS DETAILS SEE: 34-61-53-03 11-32-01-37	102102	1
- 365	233N7500-13	..PANEL ASSY- SUPPLIER CODE: V89954	102102	RF
370	NAS514P1032-10	...SCREW	102102	1
375	FH6C6CPL12BN	...SCREW- SUPPLIER CODE: V12324	102102	4
380	MS51957-27	...SCREW	102102	4
385	AN960D416	...WASHER	102102	1
390	MS35338-136	...WASHER	102102	4
395	MS35650-305T	...NUT	102102	1
400	MS21042L3	...NUT	102102	1
405	69B46200-19	...STANDOFF	102102	4
410	233T6200-228	...BRACKET	102102	1
415	233N7500-14	...BASEPLATE ASSY- SUPPLIER CODE: V89954	102102	1
420	PFSC35-38ASEMB	....STUD ASSY SUPPLIER CODE: V72794 SPECIFICATION NUMBER: BACS21DX1B	102102	4
425	233N7500-15	....BASEPLATE- SUPPLIER CODE: V89954	102102	1

MISSING ITEM NUMBERS NOT APPLICABLE

- ITEM NOT ILLUSTRATED

BOEING PROPRIETARY - Copyright © - Unpublished Work - See title page for details.

FIG ITEM	PART NUMBER	1 2 3 4 5 6 7 NOMENCLATURE	EFFECT FROM TO	UNITS PER ASSY
26				
430	233N7519-300	.PANEL ASSY-DATA TRANSFER UNIT RCPT SUPPLIER CODE: V89954 ELECTRICAL EQUIP NUMBER: M01736 COMPONENT MAINT MANUAL REF: 34-61-04 FOR OTHER SYS DETAILS SEE: 34-61-53-03	102102	1
- 440	233N7519-1	..MODULE ASSY- SUPPLIER CODE: V89954	102102	RF
445	FH6C5CPL12BN	...SCREW- SUPPLIER CODE: V12324	102102	4
450	MS51957-27	...SCREW	102102	4
455	MS35338-136	...WASHER	102102	4
460	233A7204-402	...BRACKET-SPRT SUPPLIER CODE: V89954	102102	1
465	69B46200-19	...STANDOFF	102102	4
470	233N7519-2	...BASEPLATE ASSY- SUPPLIER CODE: V89954	102102	1
475	PFSC35-38ASEMB	....STUD ASSY SUPPLIER CODE: V72794 SPECIFICATION NUMBER: BACS21DX1B	102102	4
480	BACP10U0375N	....PANEL ASSY	102102	1
485	BACP10U0112T	.PANEL ASSY	102102	1

MISSING ITEM NUMBERS NOT APPLICABLE

- ITEM NOT ILLUSTRATED

BOEING PROPRIETARY - Copyright © - Unpublished Work - See title page for details.

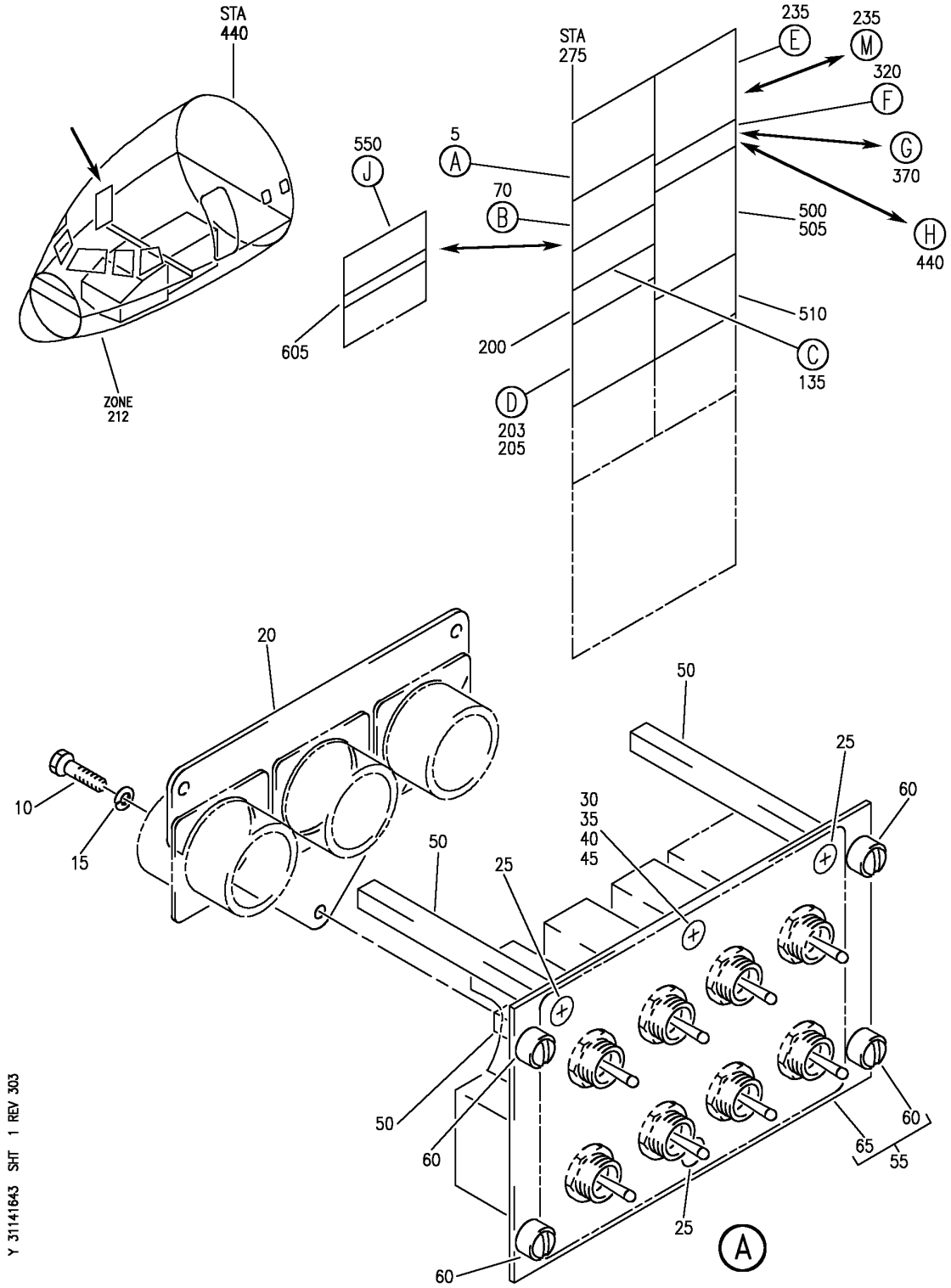

PANEL INSTL-P61 R SIDEWALL (PILOTS' RIGHT SIDE INSTRUMENT PANEL ONLY)
FIGURE 43 (SHEET 1)

BOEING PROPRIETARY - Copyright © - Unpublished Work - See title page for details.

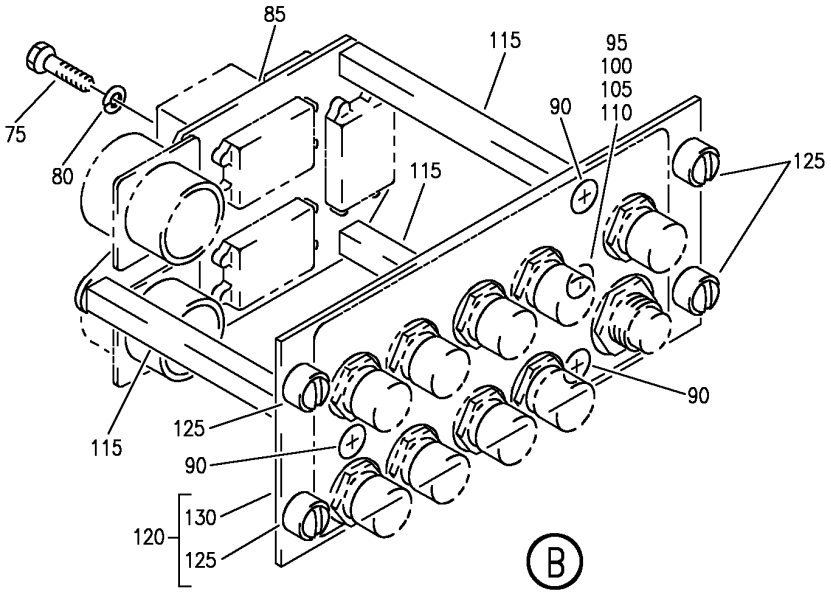

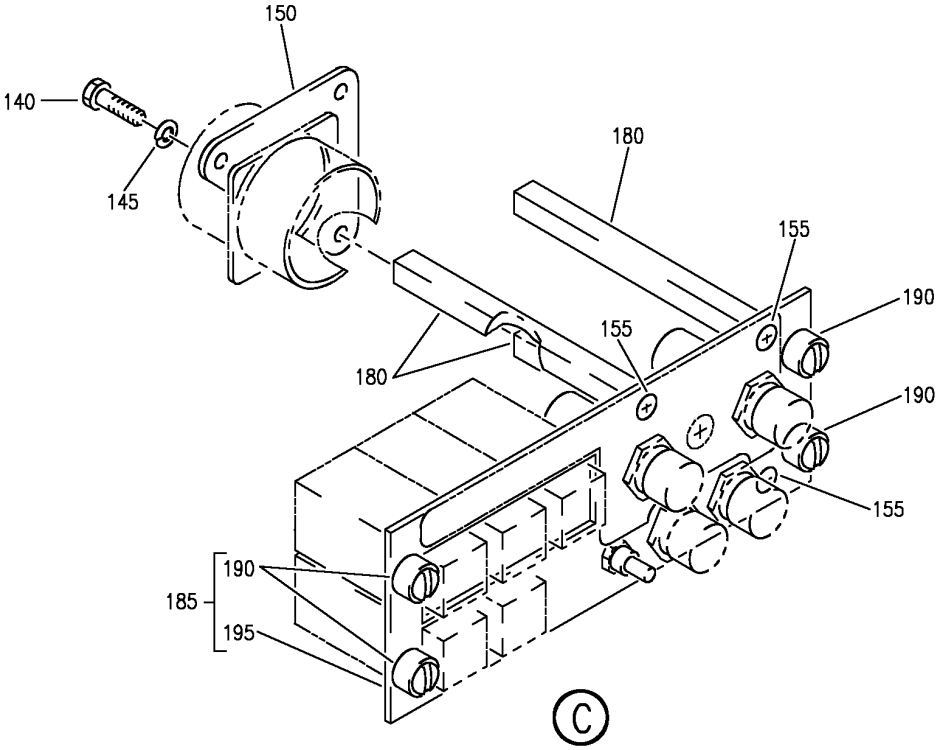

Y 3114643 SHT 2 REV 266

PANEL INSTL-P61 R SIDEWALL (PILOTS' RIGHT SIDE INSTRUMENT PANEL ONLY)
FIGURE 43 (SHEET 2)

BOEING PROPRIETARY - Copyright © - Unpublished Work - See title page for details.

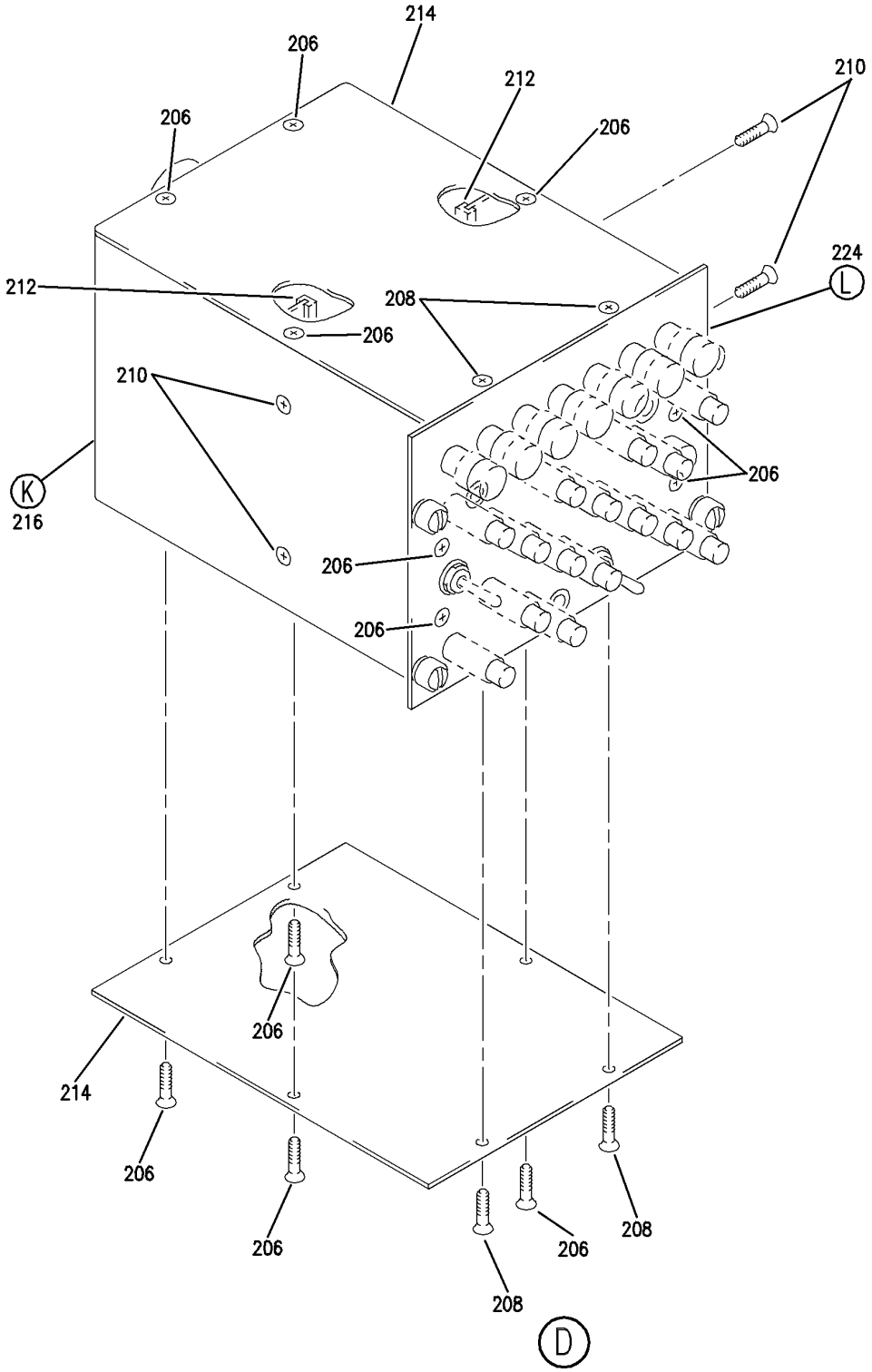

Y 31141643 SHT 3 REV 236

PANEL INSTL-P61 R SIDEWALL (PILOTS' RIGHT SIDE INSTRUMENT PANEL ONLY)
FIGURE 43 (SHEET 3)

BOEING PROPRIETARY - Copyright © - Unpublished Work - See title page for details.

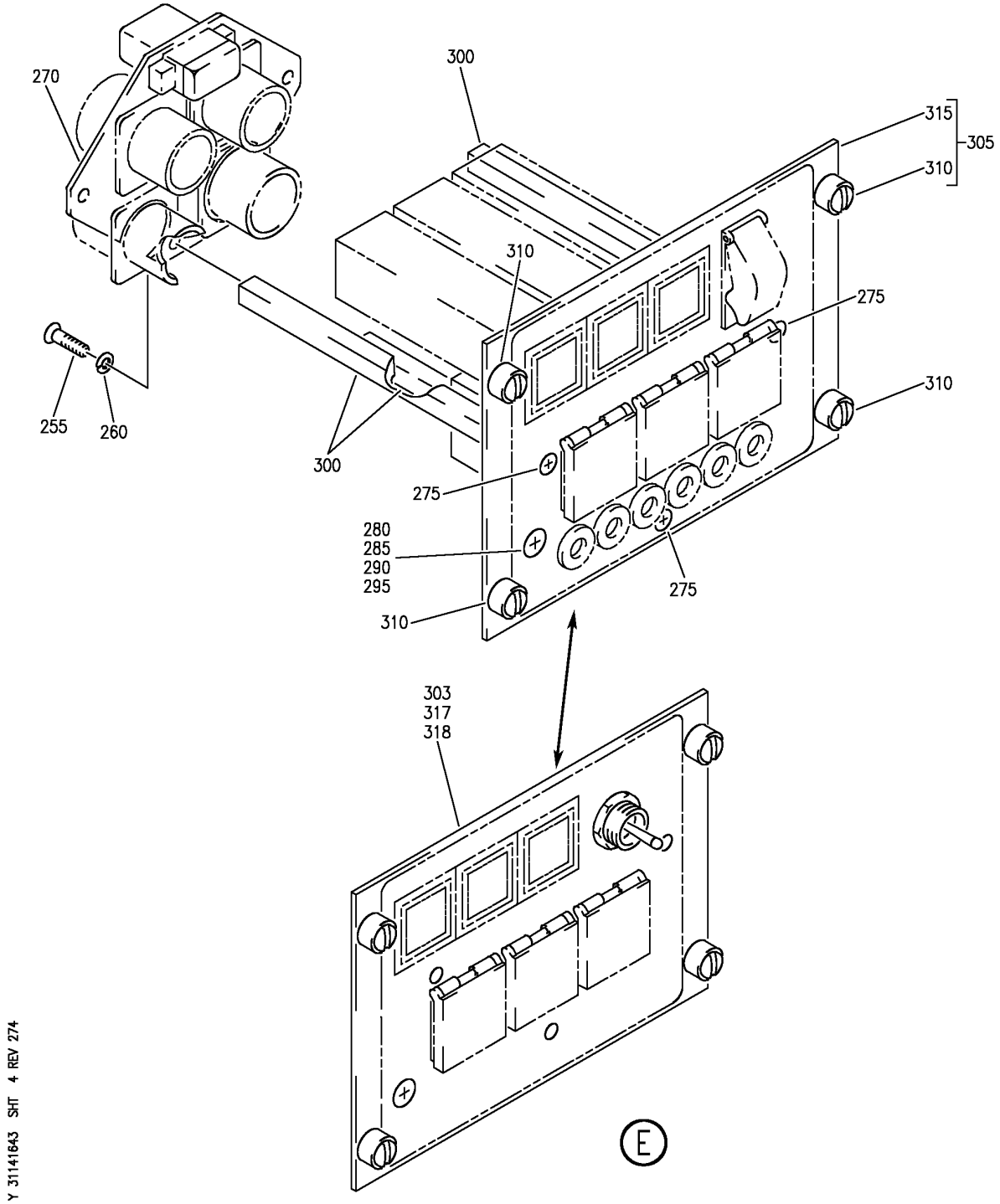

PANEL INSTL-P61 R SIDEWALL (PILOTS' RIGHT SIDE INSTRUMENT PANEL ONLY)
FIGURE 43 (SHEET 4)

BOEING PROPRIETARY - Copyright © - Unpublished Work - See title page for details.

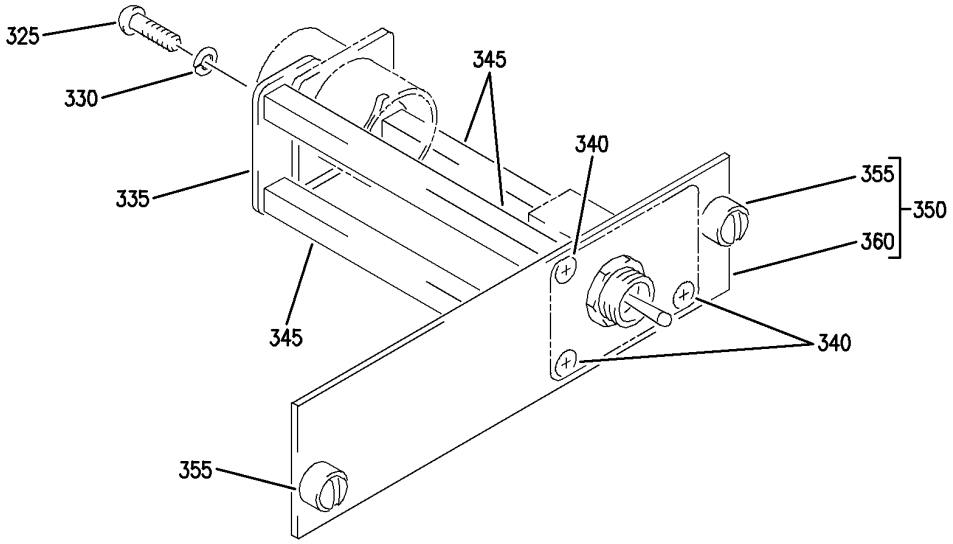

F

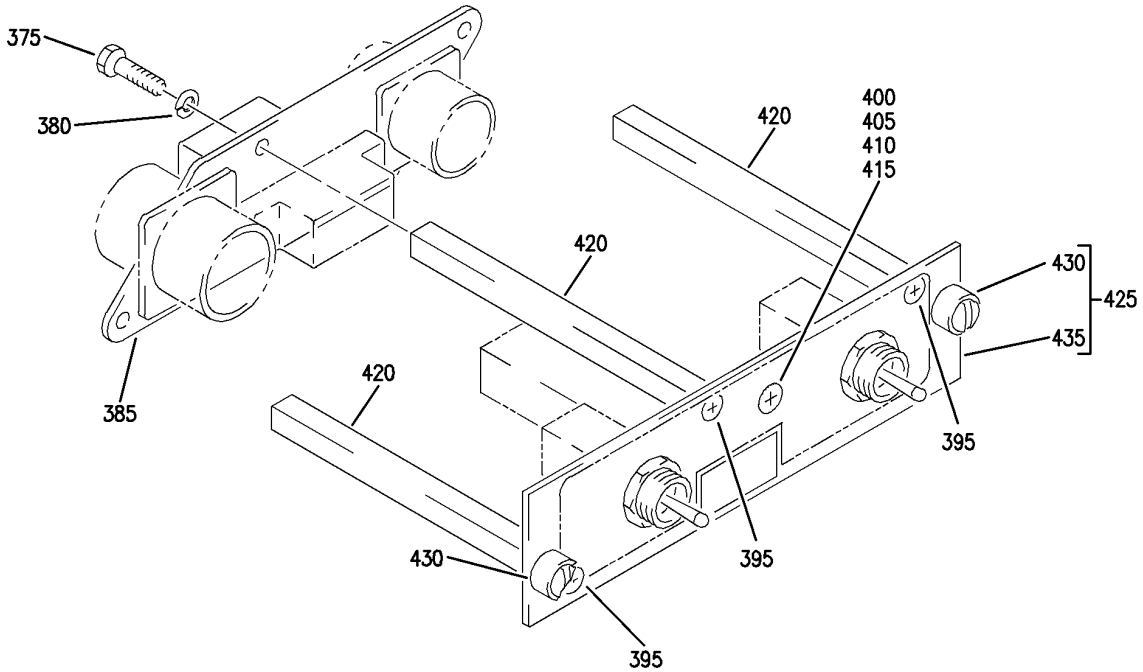

G

Y 31141643 SHT 5 REV 236

PANEL INSTL-P61 R SIDEWALL (PILOTS' RIGHT SIDE INSTRUMENT PANEL ONLY)
FIGURE 43 (SHEET 5)

BOEING PROPRIETARY - Copyright © - Unpublished Work - See title page for details.

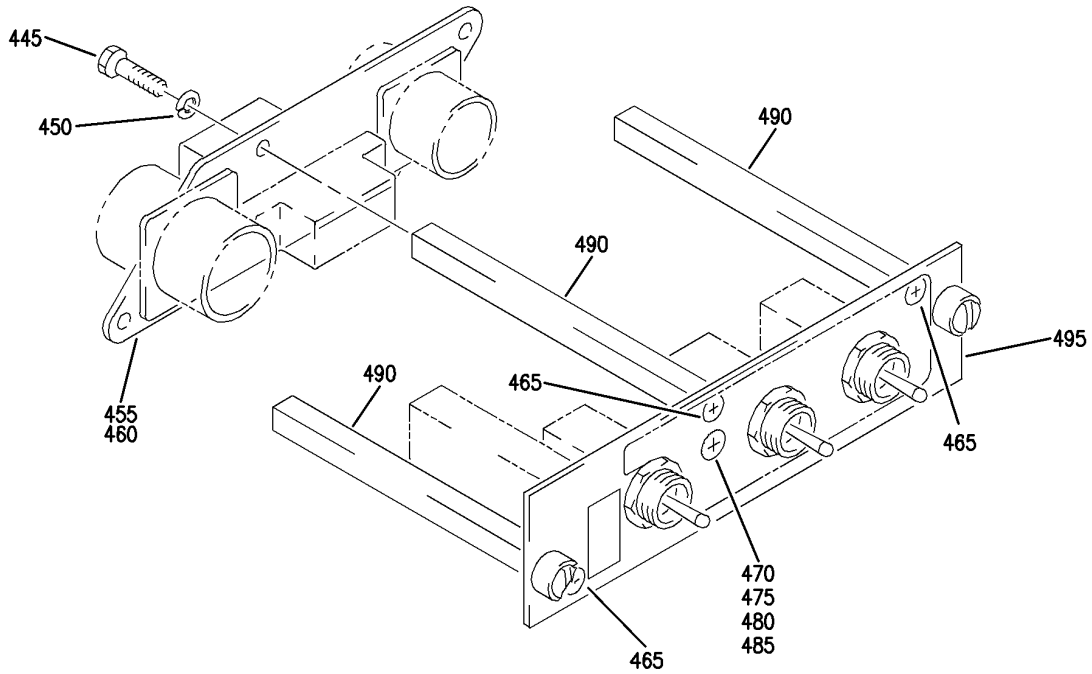

H

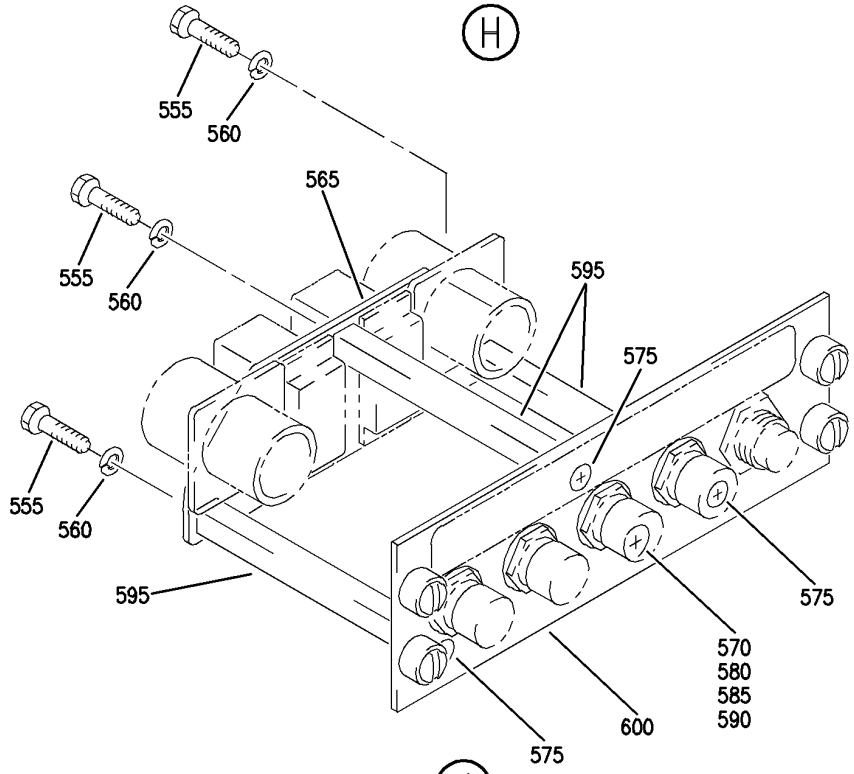

J

Y 31141643 SHT 6 REV 233

PANEL INSTL-P61 R SIDEWALL (PILOTS' RIGHT SIDE INSTRUMENT PANEL ONLY)
FIGURE 43 (SHEET 6)

BOEING PROPRIETARY - Copyright © - Unpublished Work - See title page for details.

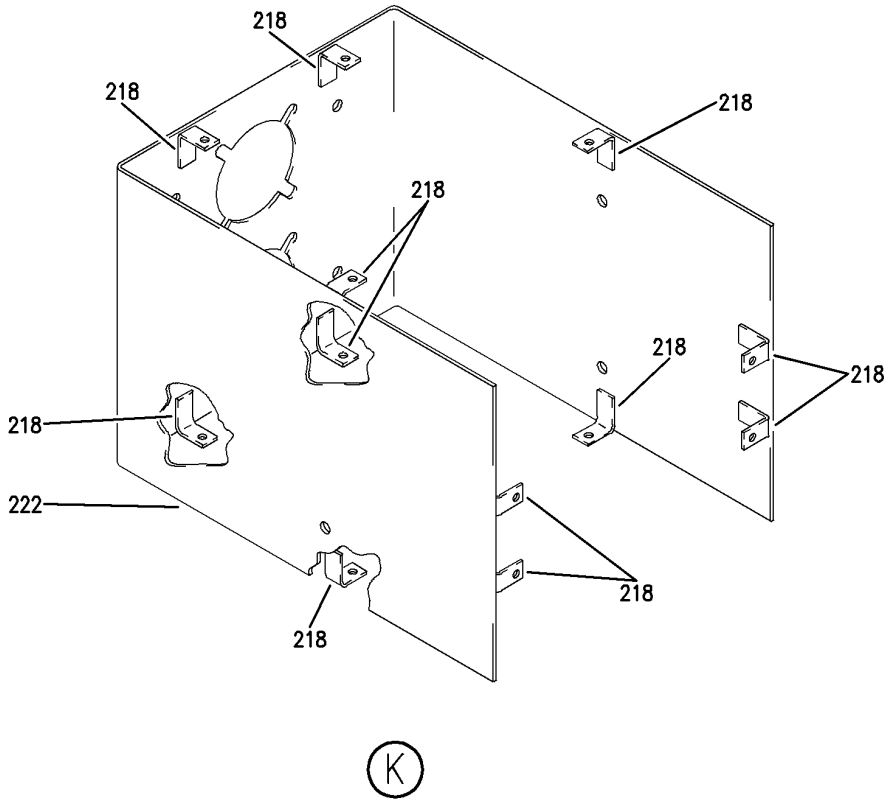

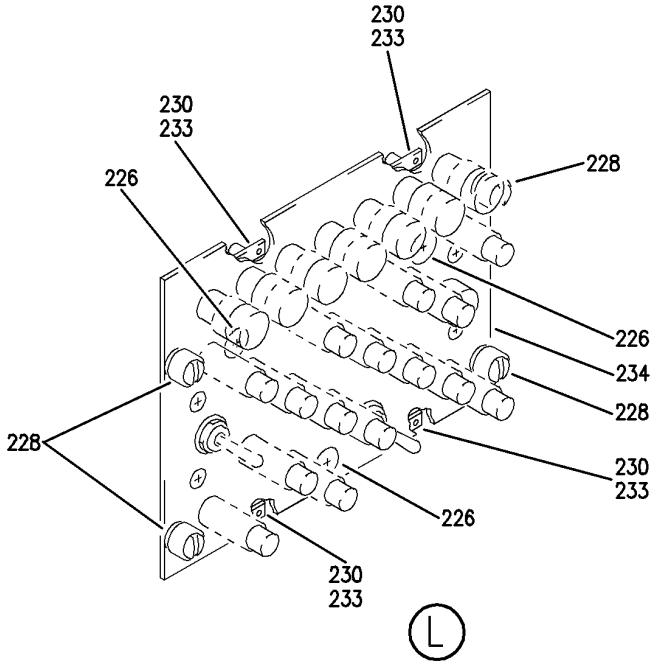

Y 31141643 SHT 7 REV 236

PANEL INSTL-P61 R SIDEWALL (PILOTS' RIGHT SIDE INSTRUMENT PANEL ONLY)
FIGURE 43 (SHEET 7)

BOEING PROPRIETARY - Copyright © - Unpublished Work - See title page for details.

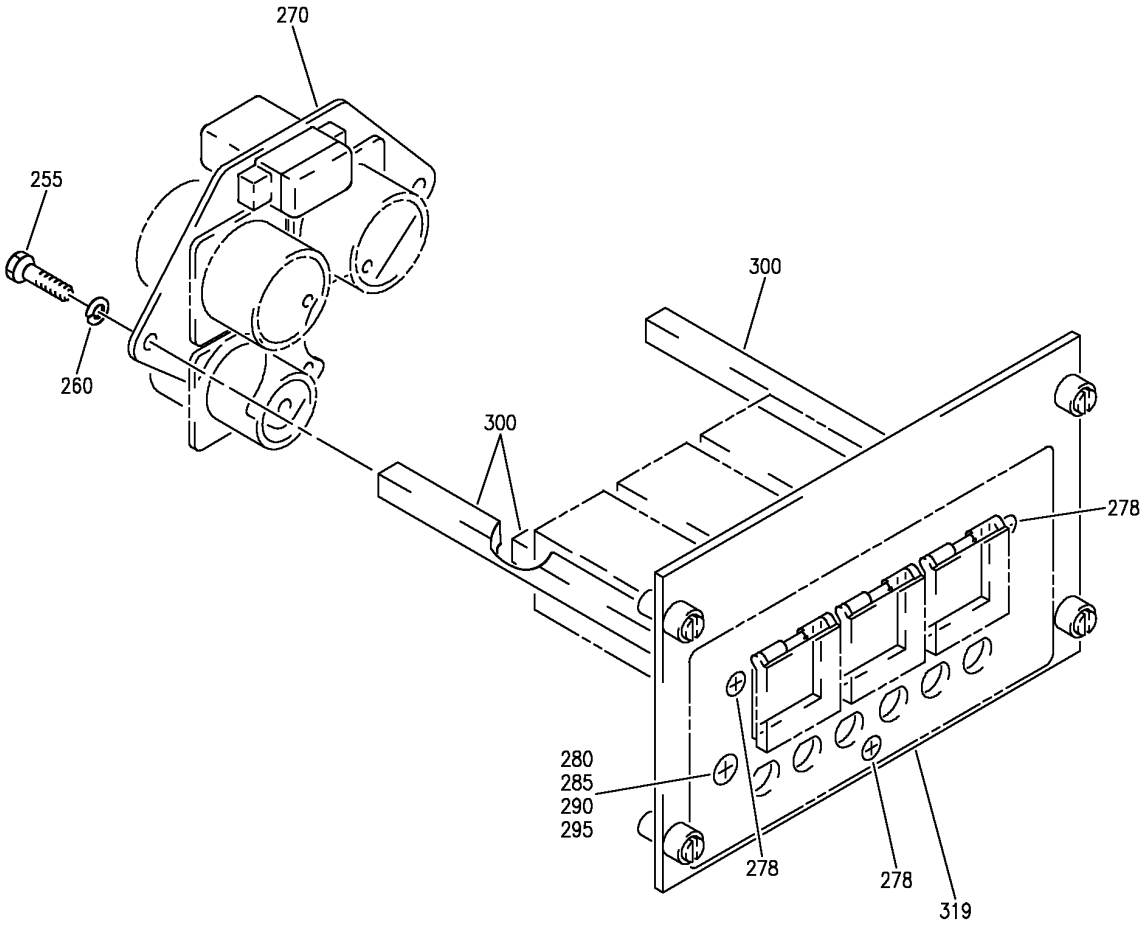

Y 31141643 SHT 8 REV 303

PANEL INSTL-P61 R SIDEWALL (PILOTS' RIGHT SIDE INSTRUMENT PANEL ONLY)
FIGURE 43 (SHEET 8)

BOEING PROPRIETARY - Copyright © - Unpublished Work - See title page for details.

FIG ITEM	PART NUMBER	1 2 3 4 5 6 7 NOMENCLATURE	EFFECT FROM TO	UNITS PER ASSY
43				
		PANEL INSTL-P61 R SIDEWALL	121503	
		(PILOTS' RIGHT SIDE	904949	
		INSTRUMENT PANEL ONLY)		
- 1	233N7401-1	PANEL INSTL-P61 SIDEWALL	121503	RF
		(PILOTS' RIGHT SIDE	904949	
		INSTRUMENT PANEL ONLY)		
		POSITION DATA:		
		R		
		VARIABLE DRAWING REF:		
		233N7401-5004		
		FOR NHA/OTHER SYS DET SEE:		
		25-10-00-05A		
5	233N7501-35	.PANEL ASSY-TEST	904949	1
		SUPPLIER CODE:		
		V89954		
		ELECTRICAL EQUIP NUMBER:		
		M10398		
		COMPONENT MAINT MANUAL REF:		
		31-51-61		
		FOR OTHER SYS DETAILS SEE:		
		11-32-01-42		
		21-58-51-04		
		22-21-51-01		
		26-18-53-01		
		28-41-51-04		
		29-22-52-01		
		30-11-52-01		
		30-41-51-04		
		31-51-51-01		
		34-12-54-01		
		34-46-51-05		

MISSING ITEM NUMBERS NOT APPLICABLE

- ITEM NOT ILLUSTRATED

BOEING PROPRIETARY - Copyright © - Unpublished Work - See title page for details.

FIG ITEM	PART NUMBER	1 2 3 4 5 6 7 NOMENCLATURE	EFFECT FROM TO	UNITS PER ASSY
43				
5	233N7501-36	.PANEL ASSY-TEST SUPPLIER CODE: V89954 SB DATA FROM A CMM: POST 233N7501-31-03 ELECTRICAL EQUIP NUMBER: M10398 COMPONENT MAINT MANUAL REF: 31-51-61 QUALIFIED I/W DATA: 233N7501-36 CAN REPLACE 233N7501-35,BUT 233N7501-35 CANNOT REPLACE 233N7501-36 IF VICKER HMG, 520850 OR 3022008-000 IS INSTALLED. FOR OTHER SYS DETAILS SEE: 11-32-01-42 21-58-51-04 22-21-51-01 26-18-53-01 28-41-51-04 29-22-52-01 30-11-52-01 30-41-51-04 31-51-51-01 34-12-54-01 34-46-51-05	121503	1
10	NAS1801-06-5	..SCREW	121503 904949	3
15	MS35338-41	..WASHER	121503 904949	3
20	233N3250-18	..BRACKET-SPRT	121503 904949	1
25	NAS514P632-5	..SCREW	121503 904949	3
30	NAS514P1032-8	..SCREW	121503 904949	1
35	AN960D416	..WASHER	121503 904949	1

MISSING ITEM NUMBERS NOT APPLICABLE

— ITEM NOT ILLUSTRATED

BOEING PROPRIETARY - Copyright © - Unpublished Work - See title page for details.

FIG ITEM	PART NUMBER	1 2 3 4 5 6 7 NOMENCLATURE	EFFECT FROM TO	UNITS PER ASSY
43				
40	BRH10A3	..NUT	121503	1
		SUPPLIER CODE:	904949	
		V52828		
		SPECIFICATION NUMBER:		
		BACN10JC3		
		OPTIONAL PART:		
		H10-3BAC		
		V15653		
		NS202101-02		
		V80539		
		RMLH9075-3W		
		V72962		
		VN303A02		
		V92215		
		96-02		
		V80539		
		T6S1032J		
		V11815		
45	MS35650-8	..NUT	121503	1
			904949	
50	69B46200-5	..STANDOFF	121503	3
			904949	
55	233N7501-11	..BASEPLATE ASSY-	121503	1
		SUPPLIER CODE:	904949	
		V89954		
60	BACS21DD1B	...STUD ASSY	121503	4
		SUPPLIER CODE:	904949	
		V08524		
		SPECIFICATION NUMBER:		
		BACS21DD1B		
65	233N7501-12	...BASEPLATE-	121503	1
		SUPPLIER CODE:	904949	
		V89954		
70	233N7506-1	.PANEL ASSY-SQUIB TEST	121503	1
		SUPPLIER CODE:	904949	
		V89954		
		ELECTRICAL EQUIP NUMBER:		
		M10401		
		COMPONENT MAINT MANUAL REF:		
		26-21-52		
		FOR OTHER SYS DETAILS SEE:		
		11-32-01-42		
		26-21-52-02		
		26-22-52-02		
		26-23-52-03		
75	BACS12CB06-5	..SCREW	121503	3
			904949	
80	MS35338-41	..WASHER	121503	3
			904949	

MISSING ITEM NUMBERS NOT APPLICABLE

– ITEM NOT ILLUSTRATED

BOEING PROPRIETARY - Copyright © - Unpublished Work - See title page for details.

FIG ITEM	PART NUMBER	1 2 3 4 5 6 7 NOMENCLATURE	EFFECT FROM TO	UNITS PER ASSY
43				
85	233N3250-24	..BRACKET	121503 904949	1
90	NAS514P632-5	..SCREW	121503 904949	3
95	NAS514P1032-10	..SCREW	121503 904949	1
100	AN960D10L	..WASHER	121503 904949	1
105	MS20341-10A	..NUT	121503 904949	1
110	BRH10A3	..NUT SUPPLIER CODE: V52828 SPECIFICATION NUMBER: BACN10JC3 OPTIONAL PART: H10-3BAC V15653 NS202101-02 V80539 RMLH9075-3W V72962 VN303A02 V92215 96-02 V80539 T6S1032J V11815	121503 904949	1
115	69B46200-5	..STANDOFF	121503 904949	3
120	233N7506-2	..BASEPLATE ASSY- SUPPLIER CODE: V89954	121503 904949	1
125	BACS21DD1B	...STUD ASSY SUPPLIER CODE: V08524 SPECIFICATION NUMBER: BACS21DD1B	121503 904949	4
130	233N7506-3	...BASEPLATE- SUPPLIER CODE: V89954	121503 904949	1

MISSING ITEM NUMBERS NOT APPLICABLE

– ITEM NOT ILLUSTRATED

BOEING PROPRIETARY - Copyright © - Unpublished Work - See title page for details.

FIG ITEM	PART NUMBER	1 2 3 4 5 6 7 NOMENCLATURE	EFFECT FROM TO	UNITS PER ASSY
43				
135	233N7509-1	.PANEL ASSY-EICAS MAINT CHAN SEL SUPPLIER CODE: V89954 ELECTRICAL EQUIP NUMBER: M10372 COMPONENT MAINT MANUAL REF: 31-41-54 FOR OTHER SYS DETAILS SEE: 11-32-01-42 31-41-53-01	121503 904949	1
140	BACS12HN06-5	..SCREW-	121503 904949	3
145	MS35338-41	..WASHER- OPTIONAL PART: BACW10EC06S	121503 904949	3
145	BACW10EC06S	..WASHER- OPTIONAL PART: MS35338-41	121503 904949	3
150	233N3250-5	..BRACKET-SPRT	121503 904949	1
155	NAS514P632-5	..SCREW	121503 904949	3
180	69B46200-6	..STANDOFF	121503 904949	3
185	233N7509-2	..BASEPLATE ASSY- SUPPLIER CODE: V89954	121503 904949	1
190	BACS21DD1B	...STUD ASSY SUPPLIER CODE: V08524 SPECIFICATION NUMBER: BACS21DD1B	121503 904949	4
195	233N7509-3	...BASEPLATE- SUPPLIER CODE: V89954	121503 904949	1
200	BACP10U0187T	.PANEL ASSY	121503 904949	1

MISSING ITEM NUMBERS NOT APPLICABLE

– ITEM NOT ILLUSTRATED

BOEING PROPRIETARY - Copyright © - Unpublished Work - See title page for details.

	FIG ITEM	PART NUMBER	1 2 3 4 5 6 7 NOMENCLATURE	EFFECT FROM TO	UNITS PER ASSY
	43				
	205	285T0022-44	.PANEL ASSY-AUDIO SELECTOR SUPPLIER CODE: V89954 ELECTRICAL EQUIP NUMBER: M10216 COMPONENT MAINT MANUAL REF: 23-51-54 POST RAPID REVISION: RR92002-108 RR92002-114 FOR OTHER SYS DETAILS SEE: 23-51-01-04 33-13-61-01	121503	1
R	205	285T0022-44	.PANEL ASSY-AUDIO SELECTOR SUPPLIER CODE: V89954 ELECTRICAL EQUIP NUMBER: M10216 COMPONENT MAINT MANUAL REF: 23-51-54 FOR OTHER SYS DETAILS SEE: 23-51-01-04 33-13-61-01	904949	1
R	206	NAS514P440-5	..SCREW	121503 904949	12
	208	NAS514P632-5	..SCREW	121503 904949	4
	210	NAS514P440-4	..SCREW	121503 904949	4
	212	BACG20ZA350	..GROMMET	121503 904949	2
	214	285T0179-47	..PANEL- SUPPLIER CODE: V89954	121503 904949	2
	216	285T0179-48	..CHASSIS ASSY- SUPPLIER CODE: V89954	121503 904949	1
	218	F22A27M22-40	...NUT-ANCHOR SUPPLIER CODE: V0217B OPTIONAL PART: A27M88-04 V62554	121503 904949	12
	218	A27M88-04	...NUT-ANCHOR SUPPLIER CODE: V62554 OPTIONAL PART: F22A27M22-40 V0271B	121503 904949	12

MISSING ITEM NUMBERS NOT APPLICABLE

– ITEM NOT ILLUSTRATED

BOEING PROPRIETARY - Copyright © - Unpublished Work - See title page for details.

FIG ITEM	PART NUMBER	1 2 3 4 5 6 7 NOMENCLATURE	EFFECT FROM TO	UNITS PER ASSY
43				
		ATTACHING PARTS		
- 220	BACR15BA2AD	...RIVET-	121503	24
		SIZE DETERMINED ON INSTL.	904949	
		-------*-------		
222	285T0179-24	...CHASSIS-	121503	1
		SUPPLIER CODE:	904949	
		V89954		
224	285T0179-43	..PANEL ASSY-FRONT	121503	1
		SUPPLIER CODE:	904949	
		V89954		
226	SF6G6CBB5D	...NUT	121503	3
		SUPPLIER CODE:	904949	
		V12324		
		SPECIFICATION NUMBER:		
		BACN10PA06-6		
228	D1400-6A1	...STUD ASSY	121503	4
		SUPPLIER CODE:	904949	
		V08524		
		SPECIFICATION NUMBER:		
		BACS21DD1		
230	F19716-06	...NUT-ANCHOR	121503	4
		SUPPLIER CODE:	904949	
		V15653		
		ATTACHING PARTS		
- 232	BACR15BA2AD	...RIVET-	121503	8
		SIZE DETERMINED ON INSTL.	904949	
		-------*-------		
233	285T0179-45	...SPACER-	121503	4
		SUPPLIER CODE:	904949	
		V89954		
234	285T0179-44	...PANEL-	121503	1
		SUPPLIER CODE:	904949	
		V89954		

MISSING ITEM NUMBERS NOT APPLICABLE

- ITEM NOT ILLUSTRATED

BOEING PROPRIETARY - Copyright © - Unpublished Work - See title page for details.

FIG ITEM	PART NUMBER	1 2 3 4 5 6 7 NOMENCLATURE	EFFECT FROM TO	UNITS PER ASSY
43				
235	233N7503-46	.PANEL ASSY-GEN FIELD AND HYDR SUPPLIER CODE: V89954 ELECTRICAL EQUIP NUMBER: M10191 COMPONENT MAINT MANUAL REF: 24-22-73 QUALIFIED I/W DATA: 233N7503-29-31-32-44-45 -46 ALL INTERCHANGEABLE EXCEPT SUBJECT TO CUSTOMER PREFERENCE FOR OTHER SYS DETAILS SEE: 11-32-01-42 24-22-73-01 27-23-51-01	121503 904949	1
235	233N7503-53	.PANEL ASSY-GEN FIELD AND HYDR SUPPLIER CODE: V89954 ELECTRICAL EQUIP NUMBER: M10191 COMPONENT MAINT MANUAL REF: 24-22-73 FOR OTHER SYS DETAILS SEE: 11-32-01-42 24-22-73-01 27-23-51-01	121503 904949	1
255	NAS1801-06-5	..SCREW- USED ON: 233N7503-34 233N7503-44 233N7503-46 233N7503-47	121503 904949	3
255	BACS12HN06-5	..SCREW- OPTIONAL PART: NAS1801-06-5 USED ON: 233N7503-51 233N7503-53	121503 904949	3
260	BACW10EC06S	..WASHER- USED ON: 233N7503-51 233N7503-53	121503 904949	3

MISSING ITEM NUMBERS NOT APPLICABLE

– ITEM NOT ILLUSTRATED

BOEING PROPRIETARY - Copyright © - Unpublished Work - See title page for details.

FIG ITEM	PART NUMBER	1 2 3 4 5 6 7 NOMENCLATURE	EFFECT FROM TO	UNITS PER ASSY
43				
270	233N7503-23	..BRACKET ASSY-SPRT	121503	1
		SUPPLIER CODE:	904949	
		V89954		
		USED ON:		
		233N7503-21		
		233N7503-29		
		233N7503-30		
		233N7503-31		
		233N7503-32		
		233N7503-44		
		233N7503-46		
		233N7503-51		
		233N7503-53		
275	NAS514P632-5	..SCREW-	121503	3
		USED ON:	904949	
		233N7503-21		
		233N7503-29		
		233N7503-30		
		233N7503-31		
		233N7503-32		
		233N7503-34		
		233N7503-44		
		233N7503-46		
		233N7503-47		
		233N7503-51		
		233N7503-53		
280	NAS514P1032-10	..SCREW	121503	1
			904949	
285	NAS1149D0463H	..WASHER-	121503	1
		USED ON:	904949	
		233N7503-51		
		233N7503-53		
		233N7503-56		
		233N7503-60		

MISSING ITEM NUMBERS NOT APPLICABLE

— ITEM NOT ILLUSTRATED

BOEING PROPRIETARY - Copyright © - Unpublished Work - See title page for details.

FIG ITEM	PART NUMBER	1 2 3 4 5 6 7 NOMENCLATURE	EFFECT FROM TO	UNITS PER ASSY
43				
290	BRH10A3	..NUT-	121503 904949	1
		SUPPLIER CODE:		
		V52828		
		SPECIFICATION NUMBER:		
		BACN10JC3		
		OPTIONAL PART:		
		H10-3BAC		
		V15653		
		NS202101-02		
		V80539		
		RMLH9075-3W		
		V72962		
		VN303A02		
		V92215		
		96-02		
		V80539		
		T6S1032J		
		V11815		
		USED ON:		
		233N7503-21		
		233N7503-29		
		233N7503-30		
		233N7503-31		
		233N7503-32		
		233N7503-34		
		233N7503-44		
		233N7503-46		
		233N7503-47		
		233N7503-51		
		233N7503-53		
295	MS35650-305T	..NUT	121503 904949	1
300	69B46200-12	..STANDOFF	121503 904949	3
305	233N7503-15	..BASEPLATE ASSY-	121503 904949	1
		SUPPLIER CODE:		
		V89954		
		USED ON:		
		233N7503-21		
		233N7503-29		
		233N7503-30		
		233N7503-31		
		233N7503-32		
		233N7503-44		
		233N7503-46		

MISSING ITEM NUMBERS NOT APPLICABLE

– ITEM NOT ILLUSTRATED

BOEING PROPRIETARY - Copyright © - Unpublished Work - See title page for details.

FIG ITEM	PART NUMBER	1 2 3 4 5 6 7 NOMENCLATURE	EFFECT FROM TO	UNITS PER ASSY
43				
310	BACS21DD1B	...STUD ASSY-	121503	4
		SUPPLIER CODE:	904949	
		V08524		
		SPECIFICATION NUMBER:		
		BACS21DD1B		
		USED ON:		
		233N7503-15		
315	233N7503-16	...BASEPLATE-	121503	1
		SUPPLIER CODE:	904949	
		V89954		
		USED ON:		
		233N7503-15		
320	233N7502-1	.PANEL ASSY-SVCE INTPH	904949	1
		ELECTRICAL EQUIP NUMBER:		
		M10399		
		FOR OTHER SYS DETAILS SEE:		
		11-32-01-42		
		23-41-52-02		
325	BACS12CB06-5	..SCREW	904949	3
330	MS35338-41	..WASHER	904949	3
335	233N3250-16	..BRACKET-SPRT	904949	1
340	NAS514P632-5	..SCREW	904949	3
345	69B46200-5	..STANDOFF	904949	3
350	233N7502-2	..BASEPLATE ASSY	904949	1
355	BACS21DD1B	...STUD ASSY	904949	2
		SUPPLIER CODE:		
		V08524		
		SPECIFICATION NUMBER:		
		BACS21DD1B		
360	233N7502-3	...BASEPLATE	904949	1
- 365	233N7502-4	..WIRE BUNDLE ASSY	904949	1
370	233N7508-14	.PANEL ASSY-FLIGHT RECORDER	121503	1
		SVCE INTPH		
		SUPPLIER CODE:		
		V89954		
		ELECTRICAL EQUIP NUMBER:		
		M00033		
		COMPONENT MAINT MANUAL REF:		
		31-31-52		
		FOR OTHER SYS DETAILS SEE:		
		11-32-01-42		
		23-41-52-01		
		31-31-04-01		
375	NAS1801-06-5	..SCREW-	121503	3
380	BACW10EC06S	..WASHER-	121503	3
385	233N7508-4	..BRACKET ASSY-	121503	1
		SUPPLIER CODE:		
		V89954		
395	NAS514P632-5	..SCREW	121503	3

MISSING ITEM NUMBERS NOT APPLICABLE

- ITEM NOT ILLUSTRATED

BOEING PROPRIETARY - Copyright © - Unpublished Work - See title page for details.

FIG ITEM	PART NUMBER	1 2 3 4 5 6 7 NOMENCLATURE	EFFECT FROM TO	UNITS PER ASSY
43				
400	NAS514P1032-10	..SCREW	121503	1
405	NAS1149D0463H	..WASHER-	121503	1
410	BRH10C3D	..NUT-	121503	1
		SUPPLIER CODE:		
		V52828		
		SPECIFICATION NUMBER:		
		BACN10JC3CD		
		OPTIONAL PART:		
		T6C1032JCD		
		V11815		
		NS202486-02		
		V80539		
		102LH9075-3W		
		V72962		
		H51650-3BAC		
		V15653		
415	MS35650-305T	..NUT-	121503	1
420	69B46200-8	..STANDOFF	121503	3
425	233N7508-2	..BASEPLATE ASSY-	121503	1
		SUPPLIER CODE:		
		V89954		
430	BACS21DD1B	...STUD ASSY	121503	2
		SUPPLIER CODE:		
		V08524		
		SPECIFICATION NUMBER:		
		BACS21DD1B		
435	233N7508-3	...BASEPLATE-	121503	1
		SUPPLIER CODE:		
		V89954		
R 500	2227050-2	.PANEL ASSY-FLIGHT DATA	904949	RF
R		ENTRY		
R		SUPPLIER CODE:		
R		V98571		
R		ELECTRICAL EQUIP NUMBER:		
R		M10301		
R		COMPONENT MAINT MANUAL REF:		
R		31-32-21		
R		FOR BREAKDOWN SEE:		
R		31-31-06-01		
505	BACP10U0600T	.PANEL ASSY	121503	1
510	BACP10U0337T	.PANEL ASSY	121503	1
			904949	

MISSING ITEM NUMBERS NOT APPLICABLE

– ITEM NOT ILLUSTRATED

BOEING PROPRIETARY - Copyright © - Unpublished Work - See title page for details.

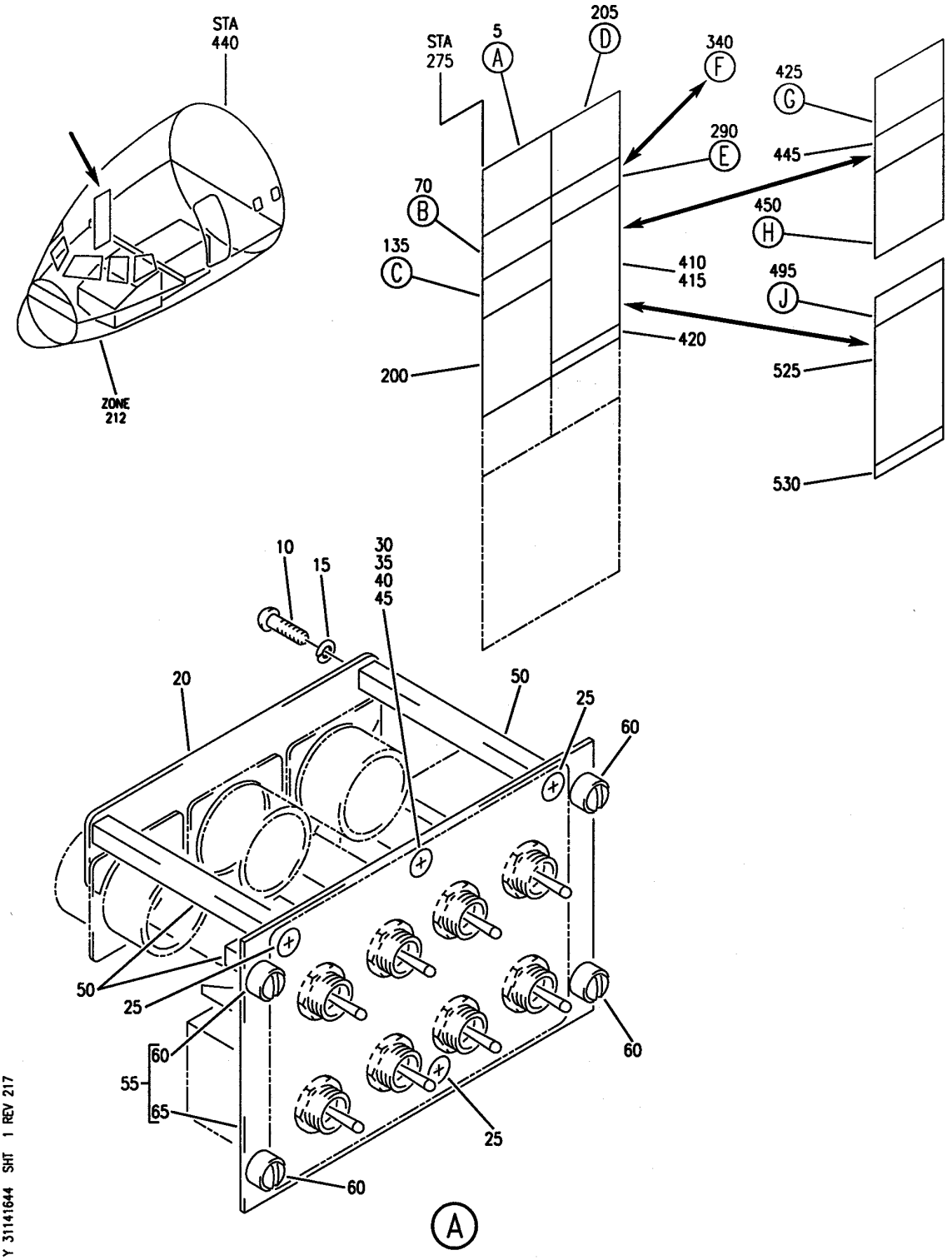

PANEL INSTL-P61 RIGHT SIDE (PILOTS' RIGHT SIDE INSTRUMENT PANEL ONLY)
FIGURE 44 (SHEET 1)

BOEING PROPRIETARY - Copyright © - Unpublished Work - See title page for details.

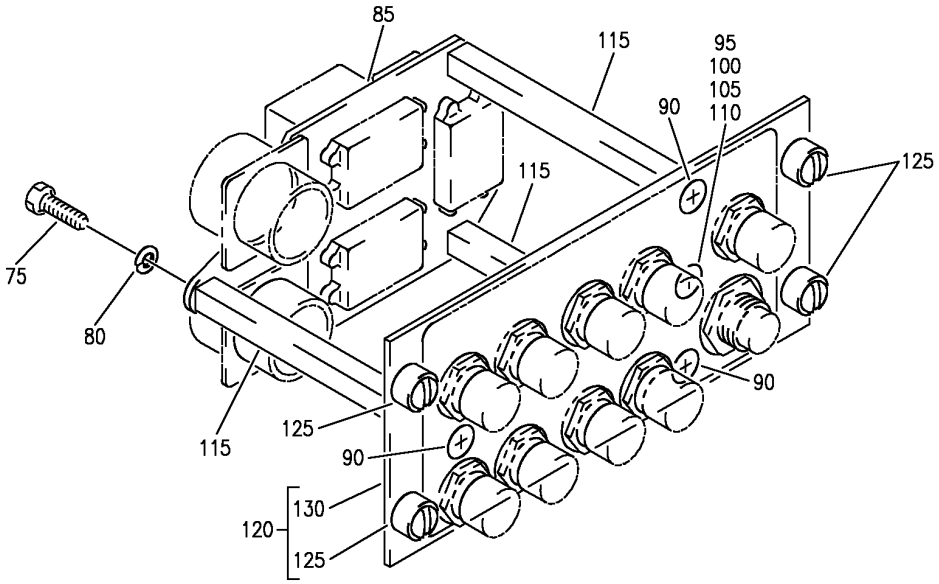

B

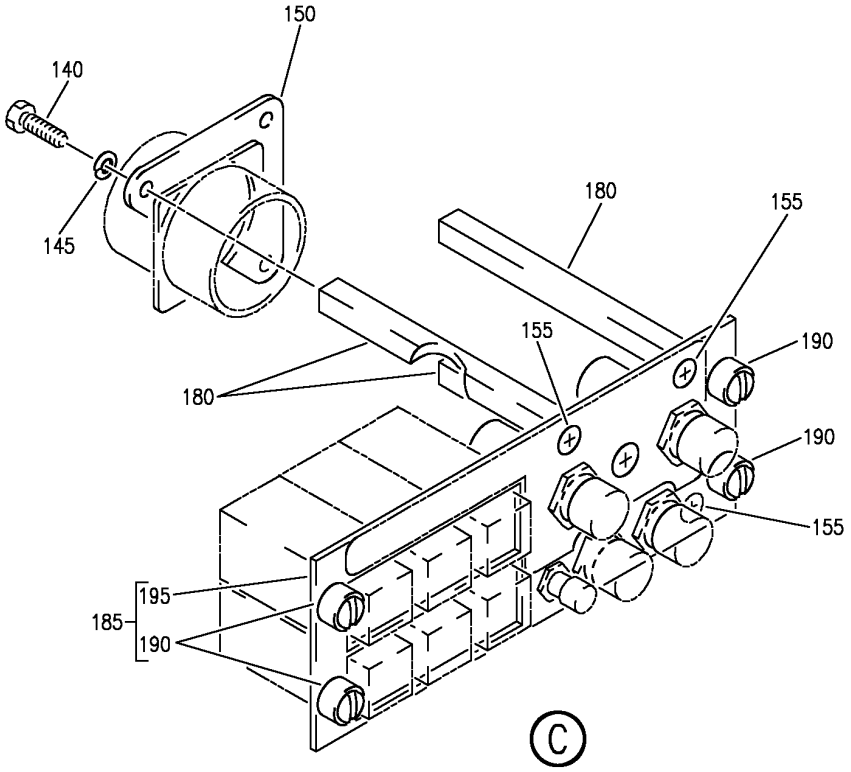

C

Y 31141644 SHT 2 REV 266

PANEL INSTL-P61 RIGHT SIDE (PILOTS' RIGHT SIDE INSTRUMENT PANEL ONLY)
FIGURE 44 (SHEET 2)

BOEING PROPRIETARY - Copyright © - Unpublished Work - See title page for details.

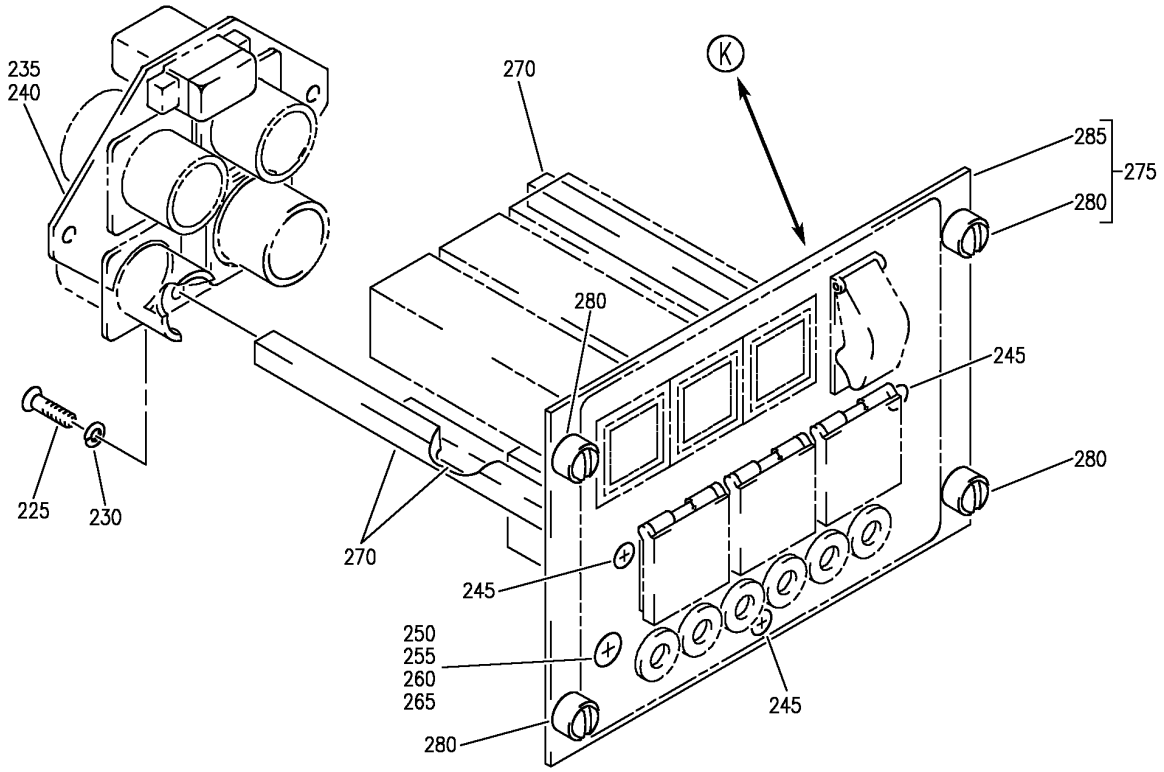

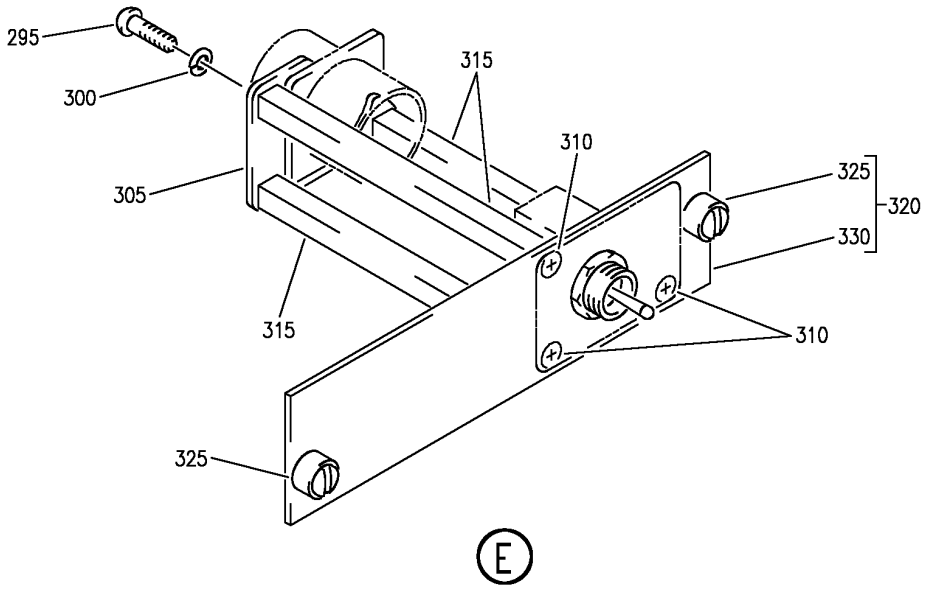

Y 31141644 SHT 3 REV 303

PANEL INSTL-P61 RIGHT SIDE (PILOTS' RIGHT SIDE INSTRUMENT PANEL ONLY)
FIGURE 44 (SHEET 3)

BOEING PROPRIETARY - Copyright © - Unpublished Work - See title page for details.

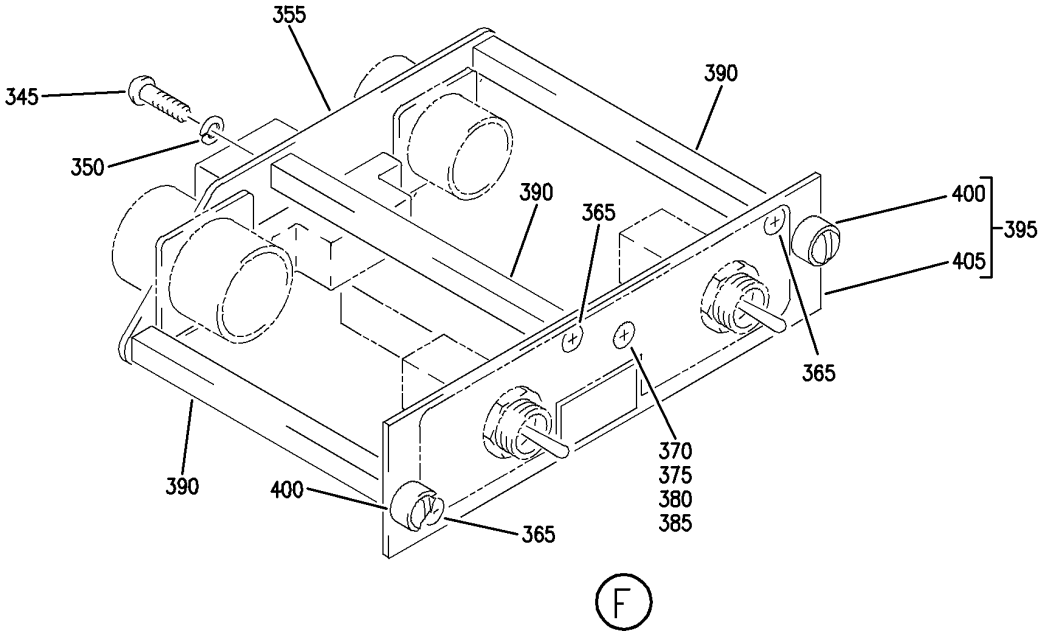

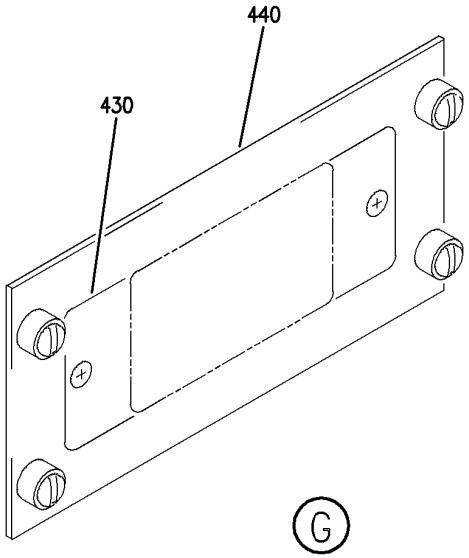

Y 31141644 SHT 4 REV 236

PANEL INSTL-P61 RIGHT SIDE (PILOTS' RIGHT SIDE INSTRUMENT PANEL ONLY)
FIGURE 44 (SHEET 4)

BOEING PROPRIETARY - Copyright © - Unpublished Work - See title page for details.

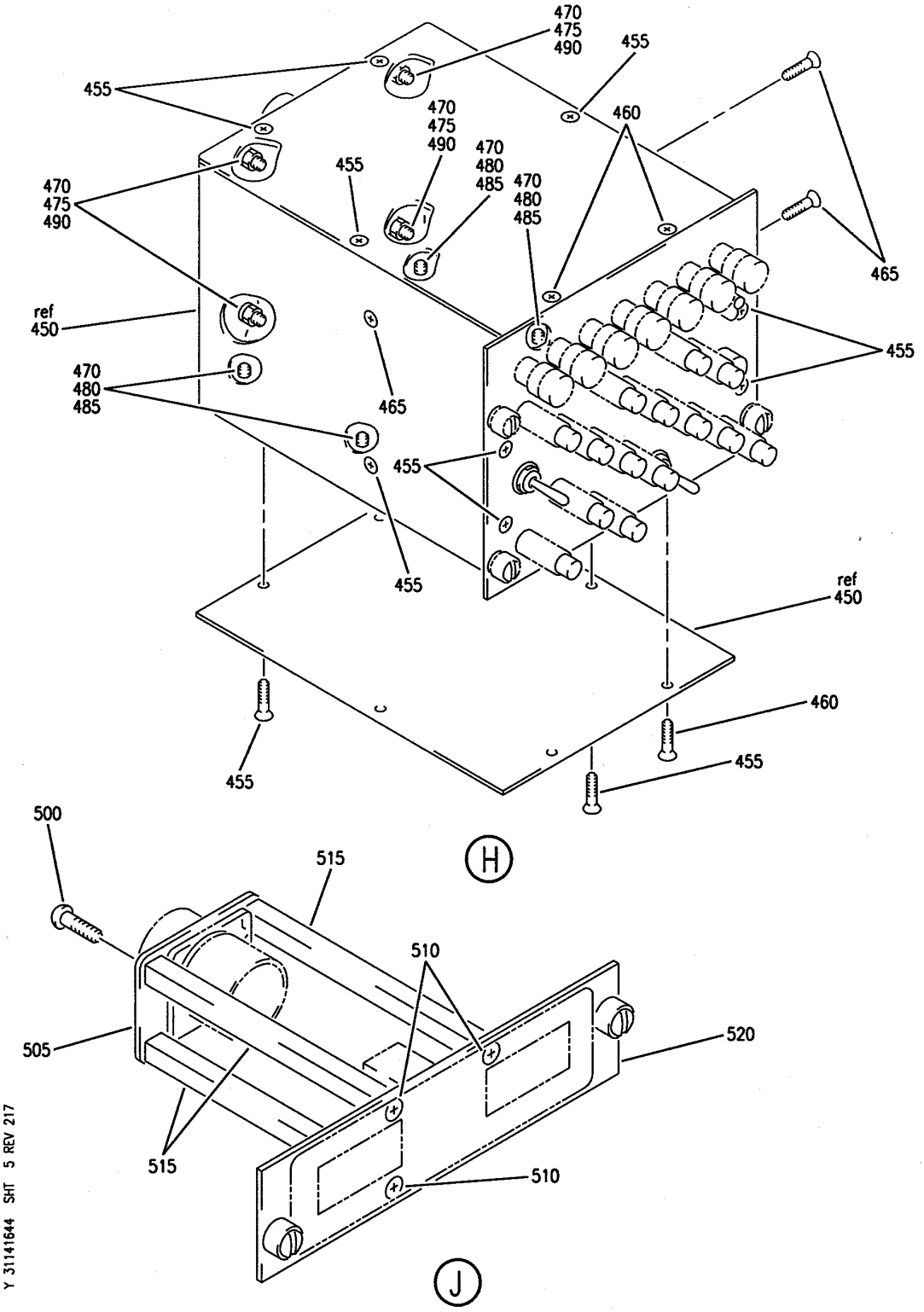

PANEL INSTL-P61 RIGHT SIDE (PILOTS' RIGHT SIDE INSTRUMENT PANEL ONLY)
FIGURE 44 (SHEET 5)

BOEING PROPRIETARY - Copyright © - Unpublished Work - See title page for details.

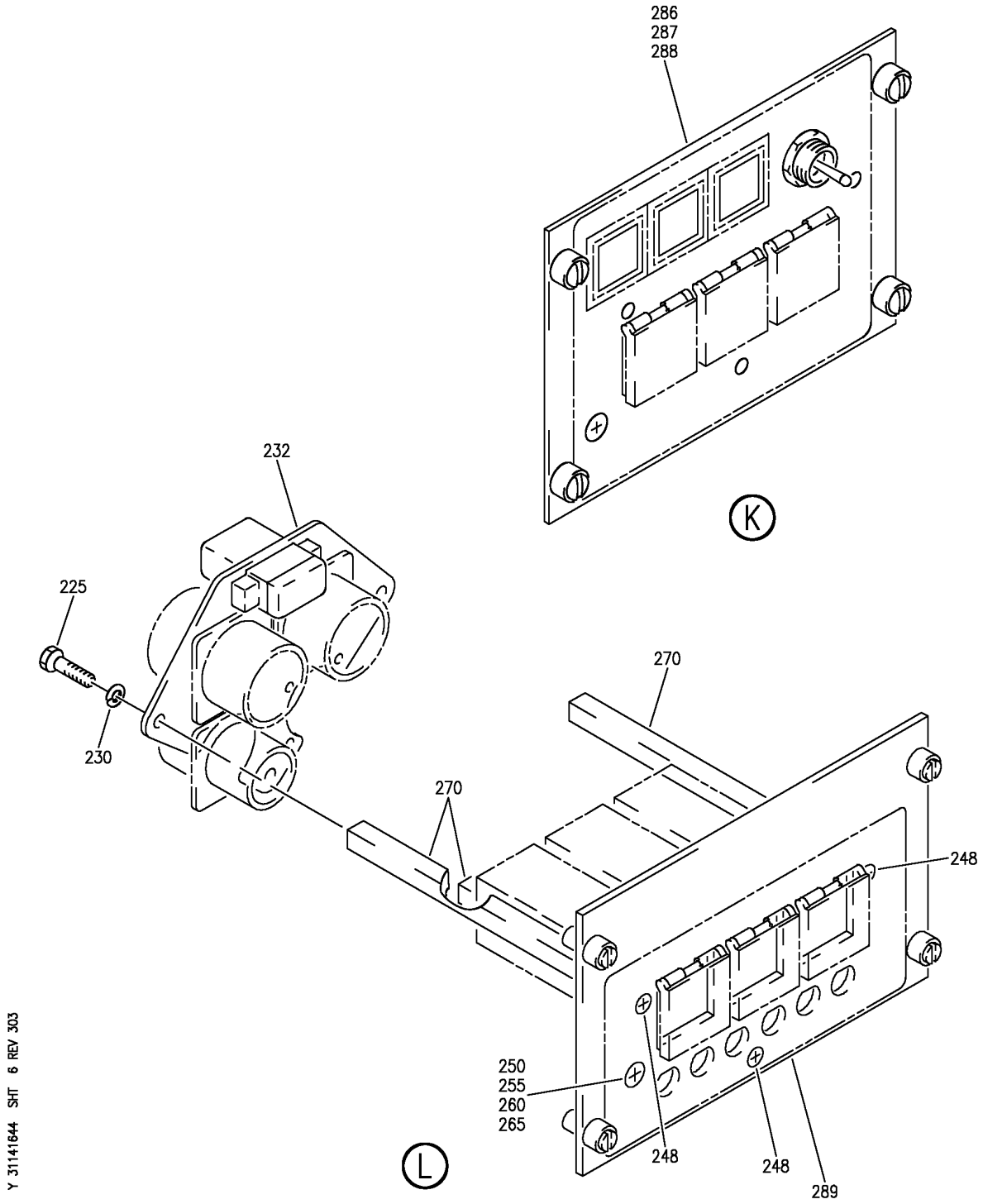

PANEL INSTL-P61 RIGHT SIDE (PILOTS' RIGHT SIDE INSTRUMENT PANEL ONLY)
FIGURE 44 (SHEET 6)

BOEING PROPRIETARY - Copyright © - Unpublished Work - See title page for details.

FIG ITEM	PART NUMBER	1 2 3 4 5 6 7 NOMENCLATURE	EFFECT FROM TO	UNITS PER ASSY
44				
		PANEL INSTL-P61 RIGHT SIDE	107107	
		(PILOTS' RIGHT SIDE		
		INSTRUMENT PANEL ONLY)		
- 1	233N7401-1	PANEL INSTL-P61	107107	RF
		(PILOTS' RIGHT SIDE		
		INSTRUMENT PANEL ONLY)		
		POSITION DATA:		
		R		
		VARIABLE DRAWING REF:		
		233N7401-5005		
		FOR NHA/OTHER SYS DET SEE:		
		25-10-00-05A		
5	233N7501-23	.PANEL ASSY-TEST	107107	1
		SUPPLIER CODE:		
		V89954		
		NOT APPROVED FOR ETOPS.		
		SB DATA FROM A CMM:		
		PRE 233N7501-31-01		
		PRE 233N7501-31-03		
		ELECTRICAL EQUIP NUMBER:		
		M10398		
		COMPONENT MAINT MANUAL REF:		
		31-51-61		
		PRE SERVICE BULLETIN:		
		24-0048		
		FOR OTHER SYS DETAILS SEE:		
		11-32-01-43		
		21-58-51-04		
		22-21-51-01		
		26-18-53-01		
		28-41-51-04		
		30-11-52-01		
		30-41-51-04		
		31-51-51-01		
		34-12-54-01		
		34-46-51-05		

MISSING ITEM NUMBERS NOT APPLICABLE

- ITEM NOT ILLUSTRATED

BOEING PROPRIETARY - Copyright © - Unpublished Work - See title page for details.

FIG ITEM	PART NUMBER	1 2 3 4 5 6 7 NOMENCLATURE	EFFECT FROM TO	UNITS PER ASSY
44				
5	233N7501-35	.PANEL ASSY-TEST	107107	1
		SUPPLIER CODE:		
		V89954		
		ELECTRICAL EQUIP NUMBER:		
		M10398		
		COMPONENT MAINT MANUAL REF:		
		31-51-61		
		POST SERVICE BULLETIN:		
		24-0048		
		FOR OTHER SYS DETAILS SEE:		
		11-32-01-43		
		21-58-51-04		
		22-21-51-01		
		26-18-53-01		
		28-41-51-04		
		29-22-52-01		
		30-11-52-01		
		30-41-51-04		
		31-51-51-01		
		34-12-54-01		
		34-46-51-05		
10	NAS1801-06-5	..SCREW	107107	3
15	MS35338-41	..WASHER	107107	3
20	233N3250-18	..BRACKET-SPRT	107107	1
25	NAS514P632-5	..SCREW	107107	3
30	NAS514P1032-8	..SCREW	107107	1
35	AN960D416	..WASHER	107107	1
40	BRH10A3	..NUT	107107	1
		SUPPLIER CODE:		
		V52828		
		SPECIFICATION NUMBER:		
		BACN10JC3		
		OPTIONAL PART:		
		H10-3BAC		
		V15653		
		NS202101-02		
		V80539		
		RMLH9075-3W		
		V72962		
		VN303A02		
		V92215		
		96-02		
		V80539		
		T6S1032J		
		V11815		
45	MS35650-8	..NUT	107107	1
50	69B46200-5	..STANDOFF	107107	3

MISSING ITEM NUMBERS NOT APPLICABLE

— ITEM NOT ILLUSTRATED

BOEING PROPRIETARY - Copyright © - Unpublished Work - See title page for details.

FIG ITEM	PART NUMBER	1 2 3 4 5 6 7 NOMENCLATURE	EFFECT FROM TO	UNITS PER ASSY
44				
55	233N7501-11	..BASEPLATE ASSY-	107107	1
		SUPPLIER CODE:		
		V89954		
60	BACS21DD1B	...STUD ASSY	107107	4
		SUPPLIER CODE:		
		V08524		
		SPECIFICATION NUMBER:		
		BACS21DD1B		
65	233N7501-12	...BASEPLATE-	107107	1
		SUPPLIER CODE:		
		V89954		
70	233N7506-1	.PANEL ASSY-SQUIB TEST	107107	1
		SUPPLIER CODE:		
		V89954		
		ELECTRICAL EQUIP NUMBER:		
		M10401		
		COMPONENT MAINT MANUAL REF:		
		26-21-52		
		FOR OTHER SYS DETAILS SEE:		
		11-32-01-43		
		26-21-52-02		
		26-22-52-02		
		26-23-52-03		
75	BACS12CB06-5	..SCREW	107107	3
80	MS35338-41	..WASHER	107107	3
85	233N3250-24	..BRACKET	107107	1
90	NAS514P632-5	..SCREW	107107	3
95	NAS514P1032-10	..SCREW	107107	1
100	AN960D10L	..WASHER	107107	1
105	MS20341-10A	..NUT	107107	1
110	BRH10A3	..NUT	107107	1
		SUPPLIER CODE:		
		V52828		
		SPECIFICATION NUMBER:		
		BACN10JC3		
		OPTIONAL PART:		
		H10-3BAC		
		V15653		
		NS202101-02		
		V80539		
		RMLH9075-3W		
		V72962		
		VN303A02		
		V92215		
		96-02		
		V80539		
		T6S1032J		
		V11815		
115	69B46200-5	..STANDOFF	107107	3

MISSING ITEM NUMBERS NOT APPLICABLE

– ITEM NOT ILLUSTRATED

BOEING PROPRIETARY - Copyright © - Unpublished Work - See title page for details.

FIG ITEM	PART NUMBER	1 2 3 4 5 6 7 NOMENCLATURE	EFFECT FROM TO	UNITS PER ASSY
44				
120	233N7506-2	..BASEPLATE ASSY- SUPPLIER CODE: V89954	107107	1
125	BACS21DD1B	...STUD ASSY SUPPLIER CODE: V08524 SPECIFICATION NUMBER: BACS21DD1B	107107	4
130	233N7506-3	...BASEPLATE- SUPPLIER CODE: V89954	107107	1
135	233N7509-1	.PANEL ASSY-EICAS MAINT CHAN SEL SUPPLIER CODE: V89954 ELECTRICAL EQUIP NUMBER: M10372 COMPONENT MAINT MANUAL REF: 31-41-54 FOR OTHER SYS DETAILS SEE: 11-32-01-43 31-41-53-01	107107	1
140	BACS12HN06-5	..SCREW-	107107	3
145	MS35338-41	..WASHER- OPTIONAL PART: BACW10EC06S	107107	3
145	BACW10EC06S	..WASHER- OPTIONAL PART: MS35338-41	107107	3
150	233N3250-5	..BRACKET-SPRT	107107	1
155	NAS514P632-5	..SCREW	107107	3
180	69B46200-6	..STANDOFF	107107	3
185	233N7509-2	..BASEPLATE ASSY- SUPPLIER CODE: V89954	107107	1
190	BACS21DD1B	...STUD ASSY SUPPLIER CODE: V08524 SPECIFICATION NUMBER: BACS21DD1B	107107	4
195	233N7509-3	...BASEPLATE- SUPPLIER CODE: V89954	107107	1
200	BACP10U0637T	.PANEL ASSY	107107	1

MISSING ITEM NUMBERS NOT APPLICABLE

– ITEM NOT ILLUSTRATED

BOEING PROPRIETARY - Copyright © - Unpublished Work - See title page for details.

FIG ITEM	PART NUMBER	1 2 3 4 5 6 7 NOMENCLATURE	EFFECT FROM TO	UNITS PER ASSY
44				
205	233N7503-32	.PANEL ASSY-GEN FIELD HYDR FLT SUPPLIER CODE: V89954 ELECTRICAL EQUIP NUMBER: M10191 COMPONENT MAINT MANUAL REF: 24-22-73 QUALIFIED I/W DATA: 233N7503-29 -31 -32 -44 -45 -46 ALL INTERCHANGEABLE EXCEPT SUBJECT TO CUSTOMER PREFERENCE -32 I/W -51 EXCEPT WHEN INSTALLING A -32 IN PLACE OF -51 FIELD GENERATOR SWITCHES S1, S2, S3 MUST BE MARKED INOPERABLE. FOR OTHER SYS DETAILS SEE: 11-32-01-43 24-22-73-01 27-23-51-01 29-18-51-01 29-22-52-01	107107	1
205	233N7503-47	.PANEL ASSY-GEN FIELD AND HYDR SUPPLIER CODE: V89954 ELECTRICAL EQUIP NUMBER: M10191 COMPONENT MAINT MANUAL REF: 24-22-73 FOR OTHER SYS DETAILS SEE: 11-32-01-43 24-22-73-01 27-23-51-01 29-22-52-01	107107	1

MISSING ITEM NUMBERS NOT APPLICABLE

– ITEM NOT ILLUSTRATED

BOEING PROPRIETARY - Copyright © - Unpublished Work - See title page for details.

FIG ITEM	PART NUMBER	1 2 3 4 5 6 7 NOMENCLATURE	EFFECT FROM TO	UNITS PER ASSY
44				
205	233N7503-34	.PANEL ASSY-GEN FIELD AND HYDR SUPPLIER CODE: V89954 ELECTRICAL EQUIP NUMBER: M10191 COMPONENT MAINT MANUAL REF: 24-22-73 FOR OTHER SYS DETAILS SEE: 11-32-01-43 24-22-73-01 27-23-51-01 29-22-52-01	107107	1
205	233N7503-56	.PANEL ASSY-GEN FIELD AND HYDR SUPPLIER CODE: V89954 ELECTRICAL EQUIP NUMBER: M10191 COMPONENT MAINT MANUAL REF: 24-22-73 FOR OTHER SYS DETAILS SEE: 11-32-01-43 24-22-73-01 27-23-51-01 29-22-52-01	107107	1
205	233N7503-60	.PANEL ASSY-GEN FIELD AND HYDR SUPPLIER CODE: V89954 ELECTRICAL EQUIP NUMBER: M10191 COMPONENT MAINT MANUAL REF: 24-22-73 QUALIFIED I/W DATA: -50 I/W -60 EXCEPT WHEN INSTALLING A -50 IN PLACE OF -60 FIELD GENERATOR SWITCHES S1, S2, S3 MUST BE MARKED INOPERABLE. FOR OTHER SYS DETAILS SEE: 11-32-01-43 24-22-73-01 27-23-51-01	107107	1

MISSING ITEM NUMBERS NOT APPLICABLE

— ITEM NOT ILLUSTRATED

BOEING PROPRIETARY - Copyright © - Unpublished Work - See title page for details.

FIG ITEM	PART NUMBER	1 2 3 4 5 6 7 NOMENCLATURE	EFFECT FROM TO	UNITS PER ASSY
44				
225	BACS12CB06-5	..SCREW-	107107	3
		USED ON:		
		233N7503-21		
		233N7503-29		
		233N7503-30		
		233N7503-31		
		233N7503-32		
225	MS51957-27	..SCREW-	107107	3
		USED ON:		
		233N7503-56		
		233N7503-60		
230	MS35338-41	..WASHER-	107107	3
		USED ON:		
		233N7503-21		
		233N7503-29		
		233N7503-30		
		233N7503-31		
		233N7503-32		
		233N7503-34		
		233N7503-44		
		233N7503-47		
230	MS35338-136	..WASHER-	107107	3
		OPTIONAL PART:		
		BACW10EC06CD		
		USED ON:		
		233N7503-56		
230	BACW10EC06CD	..WASHER-	107107	3
		OPTIONAL PART:		
		MS35338-136		
		USED ON:		
		233N7503-56		
230	MS35338-136	..WASHER-	107107	3
		USED ON:		
		233N7503-60		
232	233N3250-42	..BRACKET-SPRT	107107	1
		USED ON:		
		233N7503-34		
		233N7503-47		
		233N7503-56		

MISSING ITEM NUMBERS NOT APPLICABLE

— ITEM NOT ILLUSTRATED

BOEING PROPRIETARY - Copyright © - Unpublished Work - See title page for details.

FIG ITEM	PART NUMBER	1 2 3 4 5 6 7 NOMENCLATURE	EFFECT FROM TO	UNITS PER ASSY
44				
235	233N7503-23	..BRACKET ASSY- SUPPLIER CODE: V89954 USED ON: 233N7503-21 233N7503-29 233N7503-30 233N7503-31 233N7503-32 233N7503-44 233N7503-51	107107	1
235	233N7503-24	..BRACKET ASSY- SUPPLIER CODE: V89954 USED ON: 233N7503-60	107107	1
240	233N3250-42	...BRACKET-SPRT USED ON: 233N7503-23	107107	1
240	233N3250-35	...BRACKET-SPRT USED ON: 233N7503-24	107107	1
245	NAS514P632-5	..SCREW- USED ON: 233N7503-21 233N7503-29 233N7503-30 233N7503-31 233N7503-32 233N7503-34 233N7503-44 233N7503-47 233N7503-51	107107	3
245	NAS514P1032-5	..SCREW- OPTIONAL PART: FH6C5CPL12BN V12324 USED ON: 233N7503-56	107107	3
245	FH6C5CPL12BN	..SCREW- SUPPLIER CODE: V12324 OPTIONAL PART: NAS514P1032-5 USED ON: 233N7503-56	107107	3

MISSING ITEM NUMBERS NOT APPLICABLE

— ITEM NOT ILLUSTRATED

BOEING PROPRIETARY - Copyright © - Unpublished Work - See title page for details.

FIG ITEM	PART NUMBER	1 2 3 4 5 6 7 NOMENCLATURE	EFFECT FROM TO	UNITS PER ASSY
44				
248	FH6C5PL12BN	..SCREW-	107107	3
		SUPPLIER CODE:		
		V12324		
		USED ON:		
		233N7503-60		
250	NAS514P1032-10	..SCREW	107107	1
255	AN960D416	..WASHER-	107107	1
		USED ON:		
		233N7503-21		
		233N7503-29		
		233N7503-30		
		233N7503-31		
		233N7503-32		
		233N7503-34		
		233N7503-44		
		233N7503-47		
255	NAS1149D0463H	..WASHER-	107107	1
		USED ON:		
		233N7503-51		
		233N7503-56		
		233N7503-60		
260	BRH10A3	..NUT-	107107	1
		SUPPLIER CODE:		
		V52828		
		SPECIFICATION NUMBER:		
		BACN10JC3		
		OPTIONAL PART:		
		H10-3BAC		
		V15653		
		NS202101-02		
		V80539		
		RMLH9075-3W		
		V72962		
		VN303A02		
		V92215		
		96-02		
		V80539		
		T6S1032J		
		V11815		
		USED ON:		
		233N7503-21		
		233N7503-29		
		233N7503-30		
		233N7503-31		
		233N7503-32		
		233N7503-34		
		233N7503-44		
		233N7503-47		
		233N7503-51		

MISSING ITEM NUMBERS NOT APPLICABLE

– ITEM NOT ILLUSTRATED

BOEING PROPRIETARY - Copyright © - Unpublished Work - See title page for details.

FIG ITEM	PART NUMBER	1 2 3 4 5 6 7 NOMENCLATURE	EFFECT FROM TO	UNITS PER ASSY
44				
260	BRH10C3D	..NUT-	107107	1
		SUPPLIER CODE:		
		V52828		
		SPECIFICATION NUMBER:		
		BACN10JC3CD		
		OPTIONAL PART:		
		T6C1032JCD		
		V11815		
		NS202486-02		
		V80539		
		102LH9075-3W		
		V72962		
		H51650-3BAC		
		V15653		
		USED ON:		
		233N7503-56		
		233N7503-60		
265	MS35650-305T	..NUT	107107	1
270	69B46200-12	..STANDOFF	107107	3
275	233N7503-15	..BASEPLATE ASSY-	107107	1
		SUPPLIER CODE:		
		V89954		
		USED ON:		
		233N7503-21		
		233N7503-29		
		233N7503-30		
		233N7503-31		
		233N7503-32		
		233N7503-44		
280	BACS21DD1B	...STUD ASSY-	107107	4
		SUPPLIER CODE:		
		V08524		
		SPECIFICATION NUMBER:		
		BACS21DD1B		
		USED ON:		
		233N7503-15		
285	233N7503-16	...BASEPLATE-	107107	1
		SUPPLIER CODE:		
		V89954		
		USED ON:		
		233N7503-15		
287	233N7503-35	..BASEPLATE ASSY-	107107	1
		SUPPLIER CODE:		
		V89954		
		ALTERED FROM PART NUMBER:		
		BACP10U0375T		
		USED ON:		
		233N7503-34		
		233N7503-47		

MISSING ITEM NUMBERS NOT APPLICABLE

– ITEM NOT ILLUSTRATED

BOEING PROPRIETARY - Copyright © - Unpublished Work - See title page for details.

FIG ITEM	PART NUMBER	1 2 3 4 5 6 7 NOMENCLATURE	EFFECT FROM TO	UNITS PER ASSY
44				
288	233N7503-58	..BASEPLATE ASSY- SUPPLIER CODE: V89954 ALTERED FROM PART NUMBER: BACP10U0375T MANUFACTURED FROM: BACP10U0375T USED ON: 233N7503-56	107107	1
289	233N7503-61	..BASEPLATE ASSY- SUPPLIER CODE: V89954 ALTERED FROM PART NUMBER: BACP10U0375T USED ON: 233N7503-60	107107	1
290	233N7502-1	.PANEL ASSY-SVCE INTPH ELECTRICAL EQUIP NUMBER: M10399 FOR OTHER SYS DETAILS SEE: 11-32-01-43 23-41-52-02	107107	1
295	BACS12CB06-5	..SCREW	107107	3
300	MS35338-41	..WASHER	107107	3
305	233N3250-16	..BRACKET-SPRT	107107	1
310	NAS514P632-5	..SCREW	107107	3
315	69B46200-5	..STANDOFF	107107	3
320	233N7502-2	..BASEPLATE ASSY	107107	1
325	BACS21DD1B	...STUD ASSY SUPPLIER CODE: V08524 SPECIFICATION NUMBER: BACS21DD1B	107107	2
330	233N7502-3	...BASEPLATE	107107	1
- 335	233N7502-4	..WIRE BUNDLE ASSY	107107	1
R 410	775111-10-001	.PANEL ASSY-FLIGHT DATA ENTRY SUPPLIER CODE: V98571 SPECIFICATION NUMBER: S283T021-1 ELECTRICAL EQUIP NUMBER: M10301 COMPONENT MAINT MANUAL REF: 31-31-15 FOR BREAKDOWN SEE: 31-31-06-02	107107	RF
420	BACP10U0037T	.PANEL ASSY	107107	1

MISSING ITEM NUMBERS NOT APPLICABLE

- ITEM NOT ILLUSTRATED

BOEING PROPRIETARY - Copyright © - Unpublished Work - See title page for details.

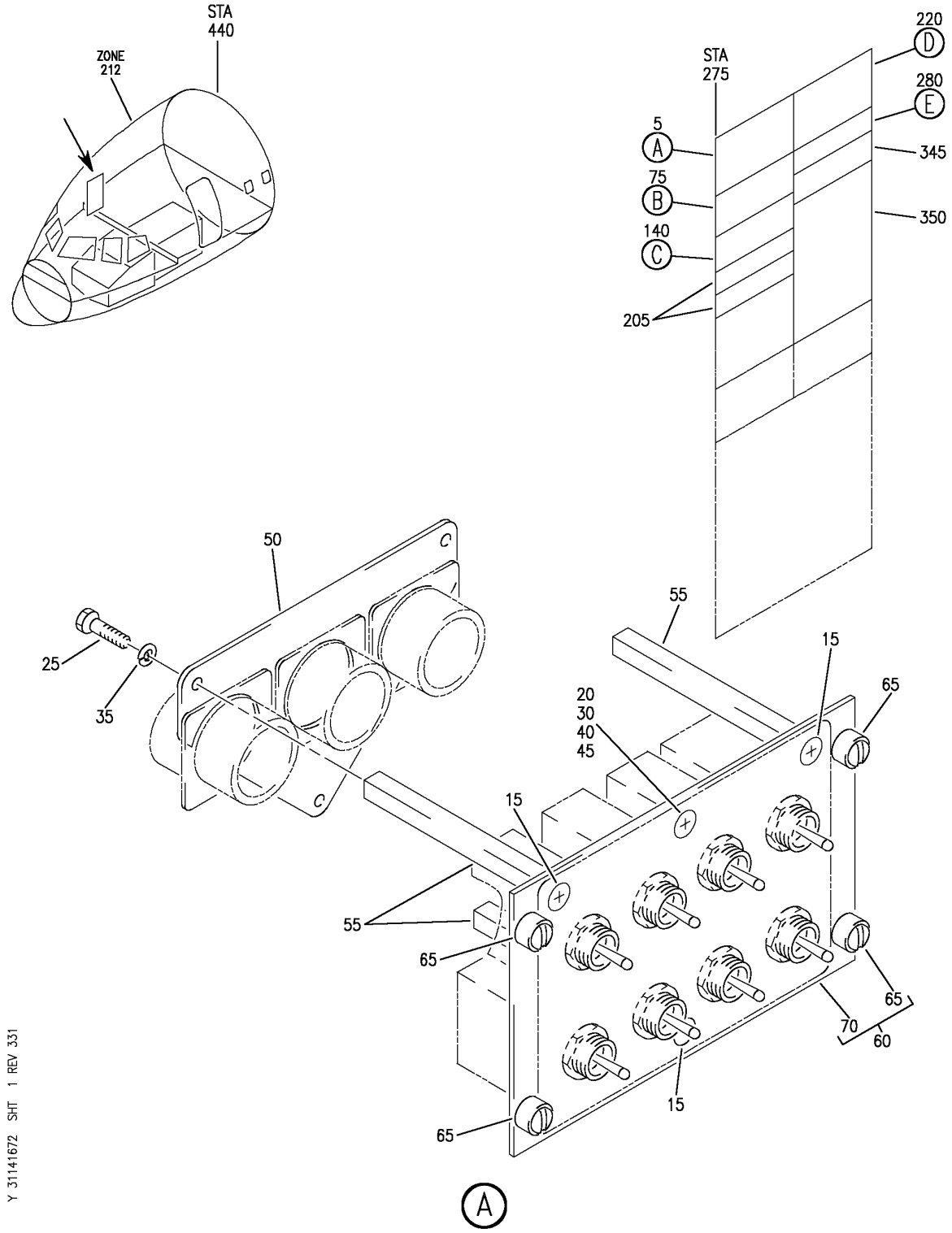

PANEL INSTL-P61 RIGHT SIDE (PILOTS' RIGHT SIDE INSTRUMENT PANEL ONLY)
FIGURE 72 (SHEET 1)

BOEING PROPRIETARY - Copyright © - Unpublished Work - See title page for details.

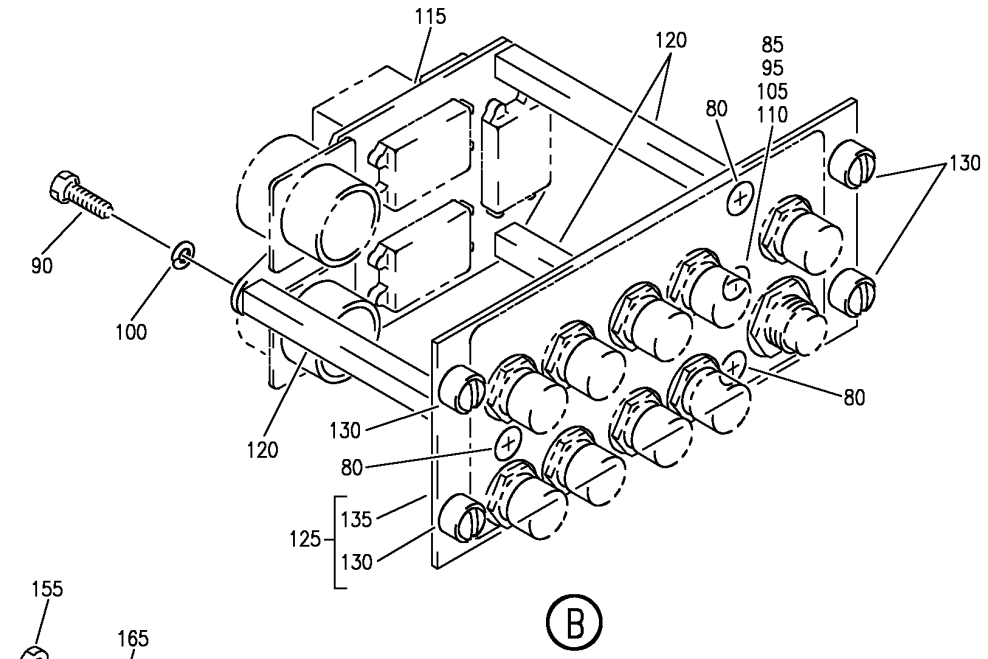

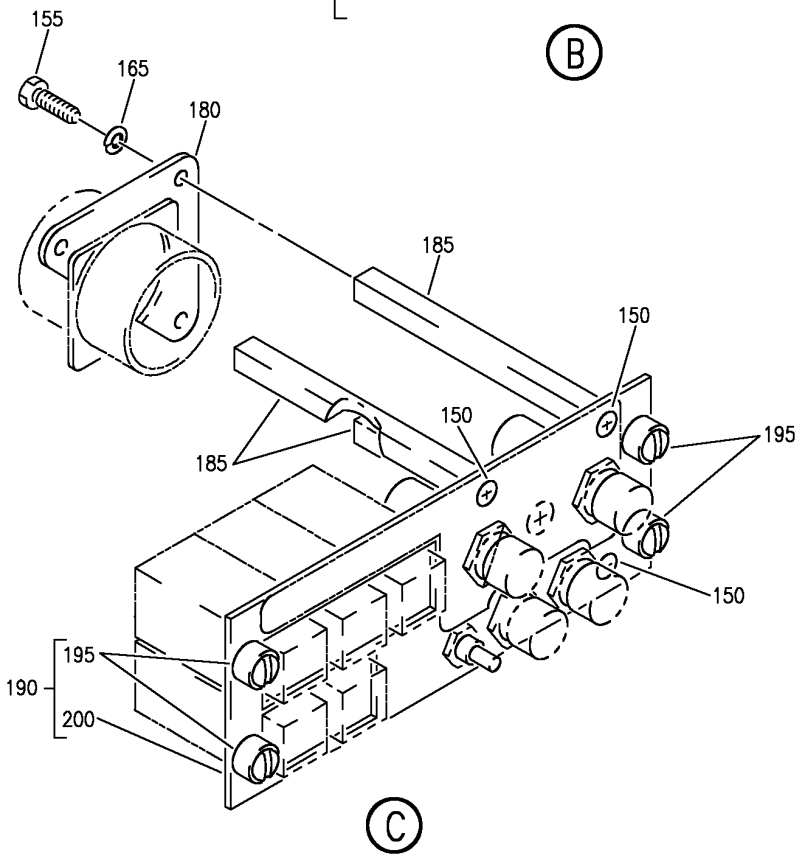

Y 31141672 SHT 2 REV 266

PANEL INSTL-P61 RIGHT SIDE (PILOTS' RIGHT SIDE INSTRUMENT PANEL ONLY)
FIGURE 72 (SHEET 2)

BOEING PROPRIETARY - Copyright © - Unpublished Work - See title page for details.

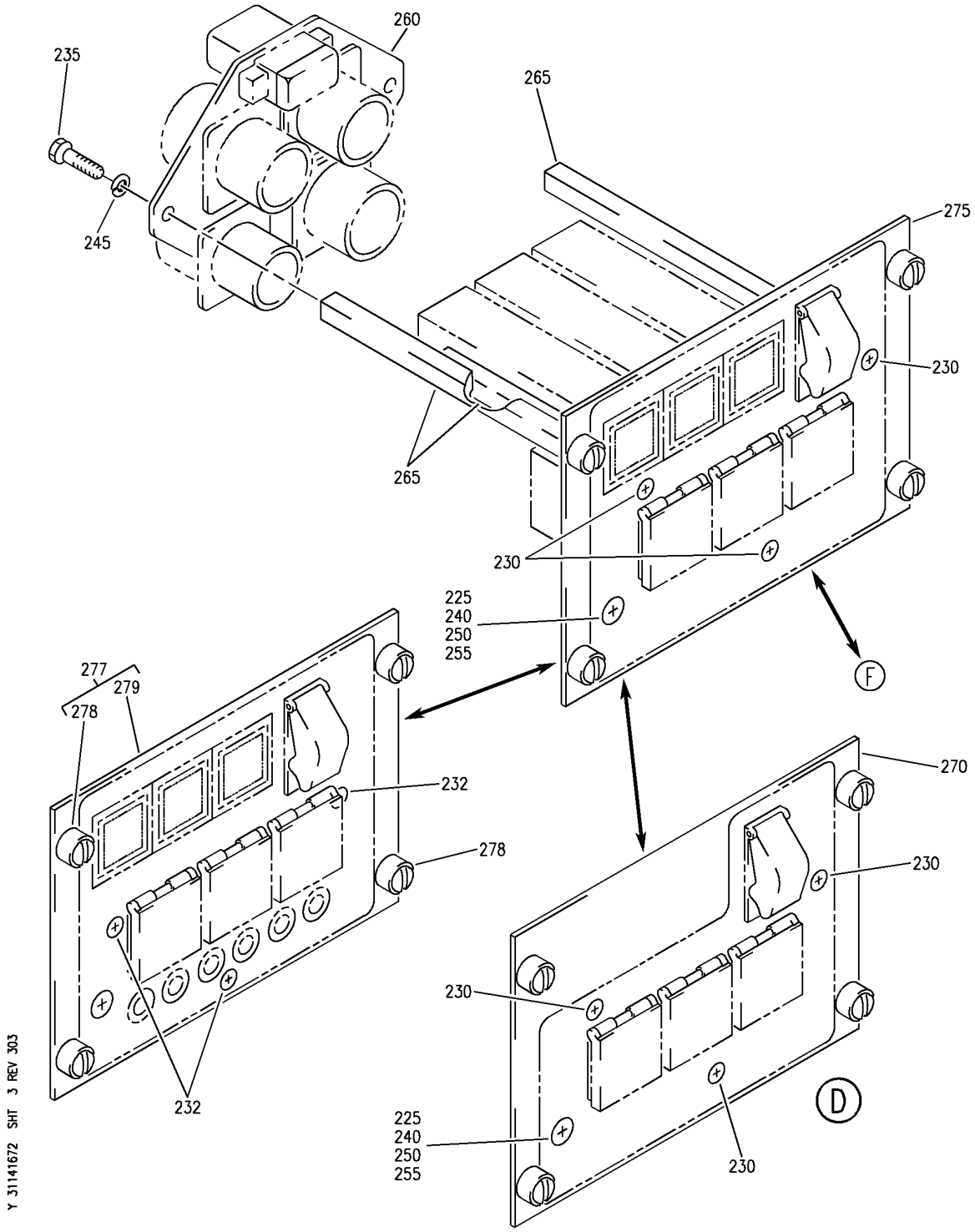

PANEL INSTL-P61 RIGHT SIDE (PILOTS' RIGHT SIDE INSTRUMENT PANEL ONLY)
FIGURE 72 (SHEET 3)

BOEING PROPRIETARY - Copyright © - Unpublished Work - See title page for details.

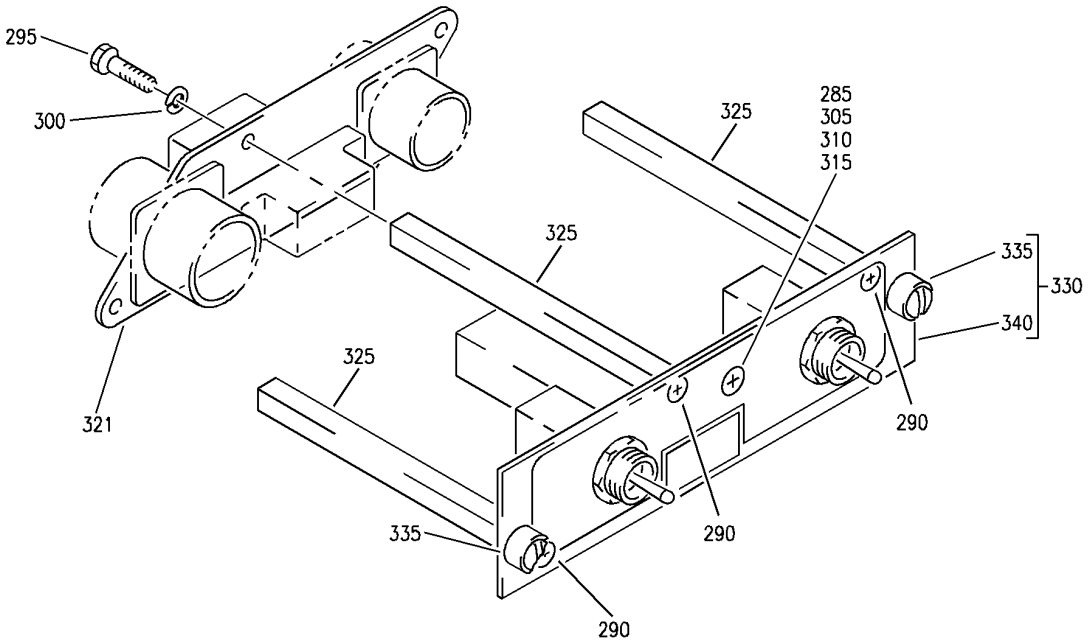

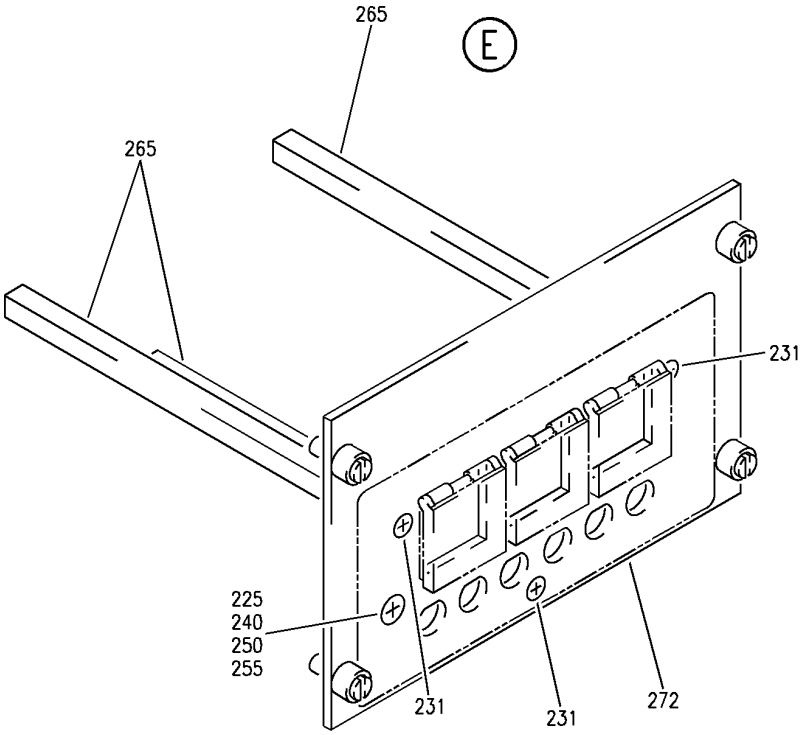

Y 31141672 SHT 4 REV 303

PANEL INSTL-P61 RIGHT SIDE (PILOTS' RIGHT SIDE INSTRUMENT PANEL ONLY)
FIGURE 72 (SHEET 4)

BOEING PROPRIETARY - Copyright © - Unpublished Work - See title page for details.

FIG ITEM	PART NUMBER	1 2 3 4 5 6 7 NOMENCLATURE	EFFECT FROM TO	UNITS PER ASSY
72				
		PANEL INSTL-P61 RIGHT SIDE	952999	
		(PILOTS' RIGHT SIDE		
		INSTRUMENT PANEL ONLY)		
- 1	233N7401-1	PANEL INSTL-P61	952999	RF
		(PILOT'S RIGHT SIDE		
		INSTRUMENT PANEL ONLY)		
		POSITION DATA:		
		R		
		VARIABLE DRAWING REF:		
		233N7401-5036		
		FOR NHA/OTHER SYS DET SEE:		
		25-10-00-05A		
5	233N7501-35	.PANEL ASSY-TEST	952952	1
		SUPPLIER CODE:		
		V89954		
		ELECTRICAL EQUIP NUMBER:		
		M10398		
		COMPONENT MAINT MANUAL REF:		
		31-51-61		
		FOR OTHER SYS DETAILS SEE:		
		11-32-01-51		
		21-58-51-04		
		22-21-51-01		
		26-18-53-01		
		28-41-51-04		
		29-22-52-01		
		30-11-52-01		
		30-41-51-04		
		31-51-51-01		
		34-12-54-01		
		34-46-51-05		

MISSING ITEM NUMBERS NOT APPLICABLE

- ITEM NOT ILLUSTRATED

BOEING PROPRIETARY - Copyright © - Unpublished Work - See title page for details.

FIG ITEM	PART NUMBER	1 2 3 4 5 6 7 NOMENCLATURE	EFFECT FROM TO	UNITS PER ASSY
72				
5	233N7501-36	.PANEL ASSY-TEST	953999	1
		SUPPLIER CODE:		
		V89954		
		ELECTRICAL EQUIP NUMBER:		
		M10398		
		COMPONENT MAINT MANUAL REF:		
		31-51-61		
		QUALIFIED I/W DATA:		
		233N7501-36 CAN REPLACE		
		233N7501-35,BUT		
		233N7501-35 CANNOT		
		REPLACE 233N7501-36		
		IF VICKER HMG, 520850		
		OR 3022008-000 IS		
		INSTALLED.		
		FOR OTHER SYS DETAILS SEE:		
		11-32-01-51		
		21-58-51-04		
		22-21-51-01		
		26-18-53-01		
		28-41-51-04		
		29-22-52-01		
		30-11-52-01		
		30-41-51-04		
		31-51-51-01		
		34-12-54-01		
		34-46-51-05		
15	NAS514P632-5	..SCREW	952999	3
20	NAS514P1032-8	..SCREW	952999	1
25	BACS12CB06-5	..SCREW	952999	3
30	AN960D416	..WASHER	952999	1
35	MS35338-41	..WASHER	952999	3
40	MS20341-10A	..NUT	952999	1

MISSING ITEM NUMBERS NOT APPLICABLE

— ITEM NOT ILLUSTRATED

BOEING PROPRIETARY - Copyright © - Unpublished Work - See title page for details.

FIG ITEM	PART NUMBER	1 2 3 4 5 6 7 NOMENCLATURE	EFFECT FROM TO	UNITS PER ASSY
72				
45	BRH10A3	..NUT	952999	1
		SUPPLIER CODE:		
		V52828		
		SPECIFICATION NUMBER:		
		BACN10JC3		
		OPTIONAL PART:		
		H10-3BAC		
		V15653		
		NS202101-02		
		V80539		
		RMLH9075-3W		
		V72962		
		VN303A02		
		V92215		
		96-02		
		V80539		
		T6S1032J		
		V11815		
50	233N3250-18	..BRACKET-SPRT	952999	1
55	69B46200-5	..STANDOFF	952999	3
60	233N7501-11	..BASEPLATE ASSY-	952999	1
		SUPPLIER CODE:		
		V89954		
65	BACS21DD1B	...STUD ASSY	952999	4
		SUPPLIER CODE:		
		V08524		
		SPECIFICATION NUMBER:		
		BACS21DD1B		
70	233N7501-12	...BASEPLATE-	952999	1
		SUPPLIER CODE:		
		V89954		
75	233N7506-1	.PANEL ASSY-SQUIB TEST	952999	1
		SUPPLIER CODE:		
		V89954		
		ELECTRICAL EQUIP NUMBER:		
		M10401		
		COMPONENT MAINT MANUAL REF:		
		26-21-52		
		FOR OTHER SYS DETAILS SEE:		
		11-32-01-51		
		26-21-52-02		
		26-22-52-02		
80	NAS514P632-5	..SCREW	952999	3
85	NAS514P1032-10	..SCREW	952999	1
90	BACS12CB06-5	..SCREW	952999	3
95	AN960D10L	..WASHER	952999	1
100	MS35338-41	..WASHER	952999	3
105	MS20341-10A	..NUT	952999	1

MISSING ITEM NUMBERS NOT APPLICABLE

– ITEM NOT ILLUSTRATED

BOEING PROPRIETARY - Copyright © - Unpublished Work - See title page for details.

FIG ITEM	PART NUMBER	1 2 3 4 5 6 7 NOMENCLATURE	EFFECT FROM TO	UNITS PER ASSY
72				
110	BRH10A3	..NUT	952999	1
		SUPPLIER CODE:		
		V52828		
		SPECIFICATION NUMBER:		
		BACN10JC3		
		OPTIONAL PART:		
		H10-3BAC		
		V15653		
		NS202101-02		
		V80539		
		RMLH9075-3W		
		V72962		
		VN303A02		
		V92215		
		96-02		
		V80539		
		T6S1032J		
		V11815		
115	233N3250-24	..BRACKET-SPRT	952999	1
120	69B46200-5	..STANDOFF	952999	3
125	233N7506-2	..BASEPLATE ASSY-	952999	1
		SUPPLIER CODE:		
		V89954		
130	BACS21DD1B	...STUD ASSY	952999	4
		SUPPLIER CODE:		
		V08524		
		SPECIFICATION NUMBER:		
		BACS21DD1B		
135	233N7506-3	...BASEPLATE-	952999	1
		SUPPLIER CODE:		
		V89954		
140	233N7509-1	.PANEL ASSY-EICAS MAINT	952999	1
		SUPPLIER CODE:		
		V89954		
		ELECTRICAL EQUIP NUMBER:		
		M10372		
		COMPONENT MAINT MANUAL REF:		
		31-41-54		
		FOR OTHER SYS DETAILS SEE:		
		11-32-01-51		
		31-41-53-01		
150	NAS514P632-5	..SCREW	952999	3
155	BACS12HN06-5	..SCREW-	952999	3
165	MS35338-41	..WASHER-	952999	3
		OPTIONAL PART:		
		BACW10EC06S		
165	BACW10EC06S	..WASHER-	952999	3
		OPTIONAL PART:		
		MS35338-41		

MISSING ITEM NUMBERS NOT APPLICABLE

– ITEM NOT ILLUSTRATED

BOEING PROPRIETARY - Copyright © - Unpublished Work - See title page for details.

FIG ITEM	PART NUMBER	1 2 3 4 5 6 7 NOMENCLATURE	EFFECT FROM TO	UNITS PER ASSY
72				
180	233N3250-5	..BRACKET-SPRT	952999	1
185	69B46200-6	..STANDOFF	952999	3
190	233N7509-2	..BASEPLATE ASSY- SUPPLIER CODE: V89954	952999	1
195	BACS21DD1B	...STUD ASSY SUPPLIER CODE: V08524 SPECIFICATION NUMBER: BACS21DD1B	952999	4
200	233N7509-3	...BASEPLATE- SUPPLIER CODE: V89954	952999	1
205	BACP10U0150T	.PANEL ASSY	952999	2
220	233N7503-47	.PANEL ASSY-GEN FIELD AND HYDR SUPPLIER CODE: V89954 ELECTRICAL EQUIP NUMBER: M10191 COMPONENT MAINT MANUAL REF: 24-22-73 FOR OTHER SYS DETAILS SEE: 11-32-01-51 24-22-73-01 27-23-51-01 29-22-52-01	952952	1
220	233N7503-56	.PANEL ASSY-GEN FIELD AND HYDR SUPPLIER CODE: V89954 ELECTRICAL EQUIP NUMBER: M10191 COMPONENT MAINT MANUAL REF: 24-22-73 FOR OTHER SYS DETAILS SEE: 11-32-01-51 24-22-73-01 27-23-51-01 29-22-52-01	952999	1

MISSING ITEM NUMBERS NOT APPLICABLE

– ITEM NOT ILLUSTRATED

BOEING PROPRIETARY - Copyright © - Unpublished Work - See title page for details.

FIG ITEM	PART NUMBER	1 2 3 4 5 6 7 NOMENCLATURE	EFFECT FROM TO	UNITS PER ASSY
72				
220	233N7503-34	.PANEL ASSY-GEN FIELD AND HYDR SUPPLIER CODE: V89954 ELECTRICAL EQUIP NUMBER: M10191 COMPONENT MAINT MANUAL REF: 24-22-73 FOR OTHER SYS DETAILS SEE: 11-32-01-51 24-22-73-01 27-23-51-01 29-22-52-01	952952	1
220	233N7503-32	.PANEL ASSY-GEN FIELD AND HYDR SUPPLIER CODE: V89954 ELECTRICAL EQUIP NUMBER: M10191 COMPONENT MAINT MANUAL REF: 24-22-73 QUALIFIED I/W DATA: 233N7503-29 -31 -32 -44 -45 -46 ALL INTERCHANGEABLE EXCEPT SUBJECT TO CUSTOMER PREFERENCE -32 I/W -51 EXCEPT WHEN INSTALLING A -32 IN PLACE OF -51 FIELD GENERATOR SWITCHES S1, S2, S3 MUST BE MARKED INOPERABLE FOR OTHER SYS DETAILS SEE: 11-32-01-51 24-22-73-01 27-23-51-01 29-18-51-01 29-22-52-01	952952	1

MISSING ITEM NUMBERS NOT APPLICABLE

— ITEM NOT ILLUSTRATED

BOEING PROPRIETARY - Copyright © - Unpublished Work - See title page for details.

FIG ITEM	PART NUMBER	1 2 3 4 5 6 7 NOMENCLATURE	EFFECT FROM TO	UNITS PER ASSY
72				
220	233N7503-60	.PANEL ASSY-GEN FIELD AND HYDR SUPPLIER CODE: V89954 ELECTRICAL EQUIP NUMBER: M10191 COMPONENT MAINT MANUAL REF: 24-22-73 QUALIFIED I/W DATA: -50 I/W -60 EXCEPT WHEN INSTALLING A -50 IN PLACE OF -60 FIELD GENERATOR SWITCHES S1, S2, S3 MUST BE MARKED INOPERABLE. FOR OTHER SYS DETAILS SEE: 11-32-01-51 24-22-73-01 27-23-51-01	952999	1
225	NAS514P1032-10	..SCREW	952999	1
230	NAS514P1032-5	..SCREW- OPTIONAL PART: FH6C5CPL12BN V12324 USED ON: 233N7503-56	952999	3
230	NAS514P632-5	..SCREW- USED ON: 233N7503-34 233N7503-47	952952	3
230	FH6C5CPL12BN	..SCREW- SUPPLIER CODE: V12324 OPTIONAL PART: NAS514P1032-5 USED ON: 233N7503-56	952999	3
231	FH6C5PL12BN	..SCREW- SUPPLIER CODE: V12324 USED ON: 233N7503-60	952999	3
232	NAS514P632-5	..SCREW- USED ON: 233N7503-32	952952	3
235	MS51957-27	..SCREW- USED ON: 233N7503-56 233N7503-60	952999	3

MISSING ITEM NUMBERS NOT APPLICABLE

– ITEM NOT ILLUSTRATED

BOEING PROPRIETARY - Copyright © - Unpublished Work - See title page for details.

FIG ITEM	PART NUMBER	1 2 3 4 5 6 7 NOMENCLATURE	EFFECT FROM TO	UNITS PER ASSY
72				
235	NAS1801-06-5	..SCREW-	952952	3
		USED ON:		
		233N7503-34		
		233N7503-47		
235	BACS12CB06-5	..SCREW-	952952	3
		USED ON:		
		233N7503-32		
240	AN960D416	..WASHER-	952952	1
		USED ON:		
		233N7503-34		
		233N7503-47		
		233N7503-32		
240	NAS1149D0463H	..WASHER-	952999	1
		USED ON:		
		233N7503-56		
		233N7503-60		
245	MS35338-136	..WASHER-	952999	3
		OPTIONAL PART:		
		BACW10EC06CD		
		USED ON:		
		233N7503-56		
245	MS35338-41	..WASHER-	952952	3
		USED ON:		
		233N7503-34		
		233N7503-47		
		233N7503-32		
245	BACW10EC06CD	..WASHER-	952999	3
		OPTIONAL PART:		
		MS35338-136		
		USED ON:		
		233N7503-56		
245	MS35338-136	..WASHER-	952999	3
		USED ON:		
		233N7503-60		
250	MS35650-305T	..NUT	952999	1

MISSING ITEM NUMBERS NOT APPLICABLE

— ITEM NOT ILLUSTRATED

BOEING PROPRIETARY - Copyright © - Unpublished Work - See title page for details.

FIG ITEM	PART NUMBER	1 2 3 4 5 6 7 NOMENCLATURE	EFFECT FROM TO	UNITS PER ASSY
72				
255	BRH10C3D	..NUT-	952999	1
		SUPPLIER CODE:		
		V52828		
		SPECIFICATION NUMBER:		
		BACN10JC3CD		
		OPTIONAL PART:		
		T6C1032JCD		
		V11815		
		NS202486-02		
		V80539		
		102LH9075-3W		
		V72962		
		H51650-3BAC		
		V15653		
		USED ON:		
		233N7503-56		
		233N7503-60		
255	BRH10A3	..NUT-	952952	1
		SUPPLIER CODE:		
		V52828		
		SPECIFICATION NUMBER:		
		BACN10JC3		
		OPTIONAL PART:		
		H10-3BAC		
		V15653		
		NS202101-02		
		V80539		
		RMLH9075-3W		
		V72962		
		VN303A02		
		V92215		
		96-02		
		V80539		
		T6S1032J		
		V11815		
		USED ON:		
		233N7503-34		
		233N7503-47		
		233N7503-32		
260	233N3250-42	..BRACKET-SPRT	952999	1
		USED ON:		
		233N7503-34		
		233N7503-47		
		233N7503-56		
260	233N7503-23	..BRACKET ASSY-SPRT	952952	1
		SUPPLIER CODE:		
		V89954		
		USED ON:		
		233N7503-32		

MISSING ITEM NUMBERS NOT APPLICABLE

– ITEM NOT ILLUSTRATED

BOEING PROPRIETARY - Copyright © - Unpublished Work - See title page for details.

FIG ITEM	PART NUMBER	1 2 3 4 5 6 7 NOMENCLATURE	EFFECT FROM TO	UNITS PER ASSY
72				
260	233N7503-24	..BRACKET ASSY-SPRT SUPPLIER CODE: V89954 USED ON: 233N7503-60	952999	1
265	69B46200-12	..STANDOFF	952999	3
270	233N7503-58	..BASEPLATE ASSY- SUPPLIER CODE: V89954 ALTERED FROM PART NUMBER: BACP10U0375T MANUFACTURED FROM: BACP10U0375T USED ON: 233N7503-56	952999	1
272	233N7503-61	..BASEPLATE ASSY- SUPPLIER CODE: V89954 ALTERED FROM PART NUMBER: BACP10U0375T USED ON: 233N7503-60	952999	1
275	233N7503-35	..BASEPLATE ASSY- SUPPLIER CODE: V89954 ALTERED FROM PART NUMBER: BACP10U0375T USED ON: 233N7503-34 233N7503-47	952952	1
277	233N7503-15	..BASEPLATE ASSY- SUPPLIER CODE: V89954 USED ON: 233N7503-32	952952	1
278	BACS21DD1B	...STUD ASSY- SUPPLIER CODE: V08524 SPECIFICATION NUMBER: BACS21DD1B USED ON: 233N7503-32	952952	4
279	233N7503-16	...BASEPLATE- SUPPLIER CODE: V89954 USED ON: 233N7503-32	952952	1

MISSING ITEM NUMBERS NOT APPLICABLE

– ITEM NOT ILLUSTRATED

BOEING PROPRIETARY - Copyright © - Unpublished Work - See title page for details.

FIG ITEM	PART NUMBER	1 2 3 4 5 6 7 NOMENCLATURE	EFFECT FROM TO	UNITS PER ASSY
72				
280	233N7508-14	.PANEL ASSY-FLIGHT RECORDER /SVCE INTPH	952999	1
		SUPPLIER CODE: V89954		
		ELECTRICAL EQUIP NUMBER: M00033		
		COMPONENT MAINT MANUAL REF: 31-31-52		
		FOR OTHER SYS DETAILS SEE: 11-32-01-51 23-41-52-01 31-31-04-01		
285	NAS514P1032-10	..SCREW	952999	1
290	NAS514P632-5	..SCREW	952999	3
295	NAS1801-06-5	..SCREW-	952999	3
300	BACW10EC06S	..WASHER-	952999	3
305	NAS1149D0463H	..WASHER-	952999	1
310	BRH10C3D	..NUT-	952999	1
		SUPPLIER CODE: V52828		
		SPECIFICATION NUMBER: BACN10JC3CD		
		OPTIONAL PART: T6C1032JCD V11815 NS202486-02 V80539 102LH9075-3W V72962 H51650-3BAC V15653		
315	MS35650-305T	..NUT-	952999	1
321	233N7508-4	..BRACKET ASSY-	952999	1
		SUPPLIER CODE: V89954		
325	69B46200-8	..STANDOFF	952999	3
330	233N7508-2	..BASEPLATE ASSY-	952999	1
		SUPPLIER CODE: V89954		
335	BACS21DD1B	...STUD ASSY	952999	2
		SUPPLIER CODE: V08524		
		SPECIFICATION NUMBER: BACS21DD1B		
340	233N7508-3	...BASEPLATE-	952999	1
		SUPPLIER CODE: V89954		
345	BACP10U0187T	.PANEL ASSY	952999	1
350	BACP10U0900T	.PANEL ASSY	952999	1

MISSING ITEM NUMBERS NOT APPLICABLE

— ITEM NOT ILLUSTRATED

BOEING PROPRIETARY - Copyright © - Unpublished Work - See title page for details.

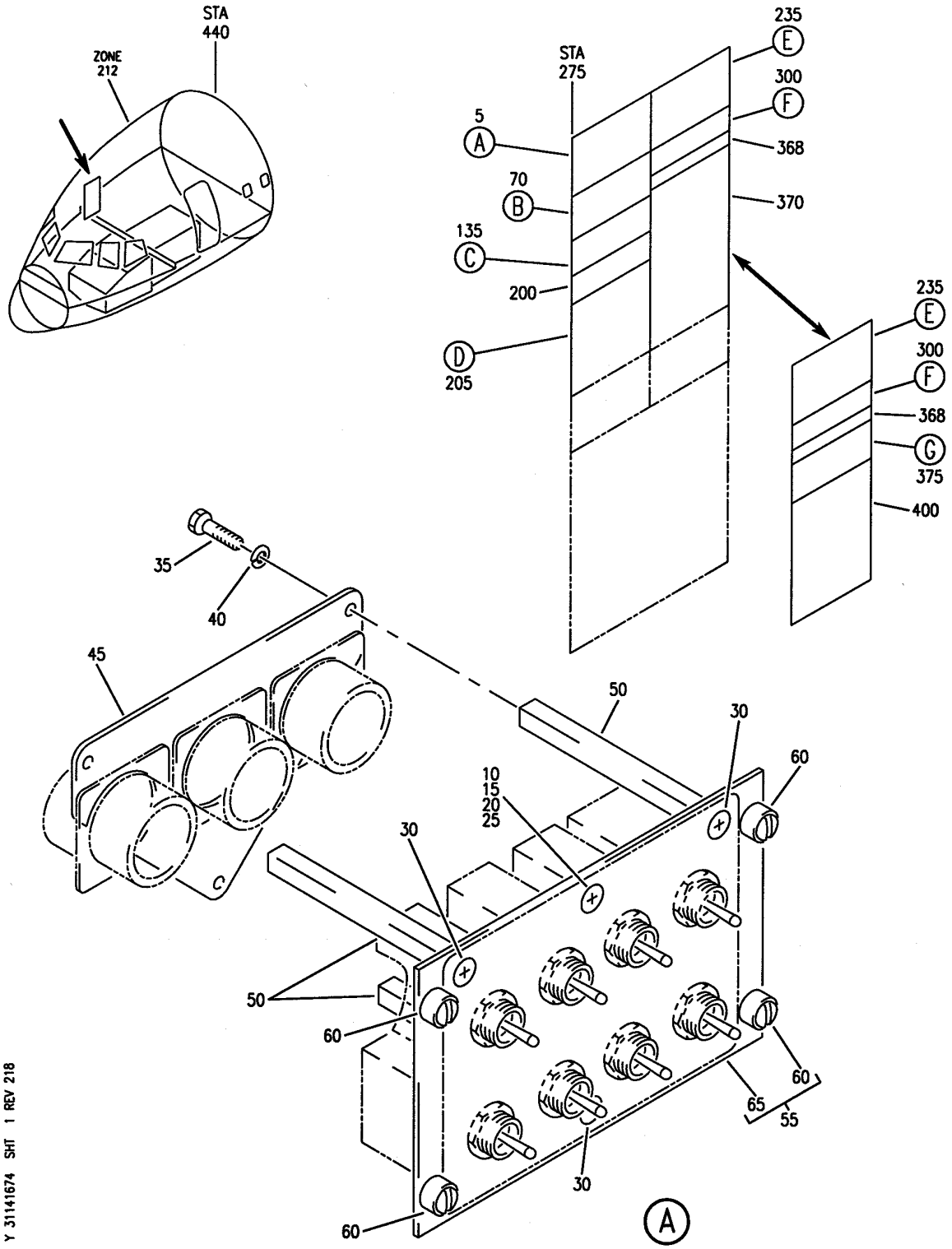

PANEL INSTL-P61 R SIDEWALL (PILOTS' RIGHT SIDE INSTRUMENT PANEL ONLY)
FIGURE 74 (SHEET 1)

BOEING PROPRIETARY - Copyright © - Unpublished Work - See title page for details.

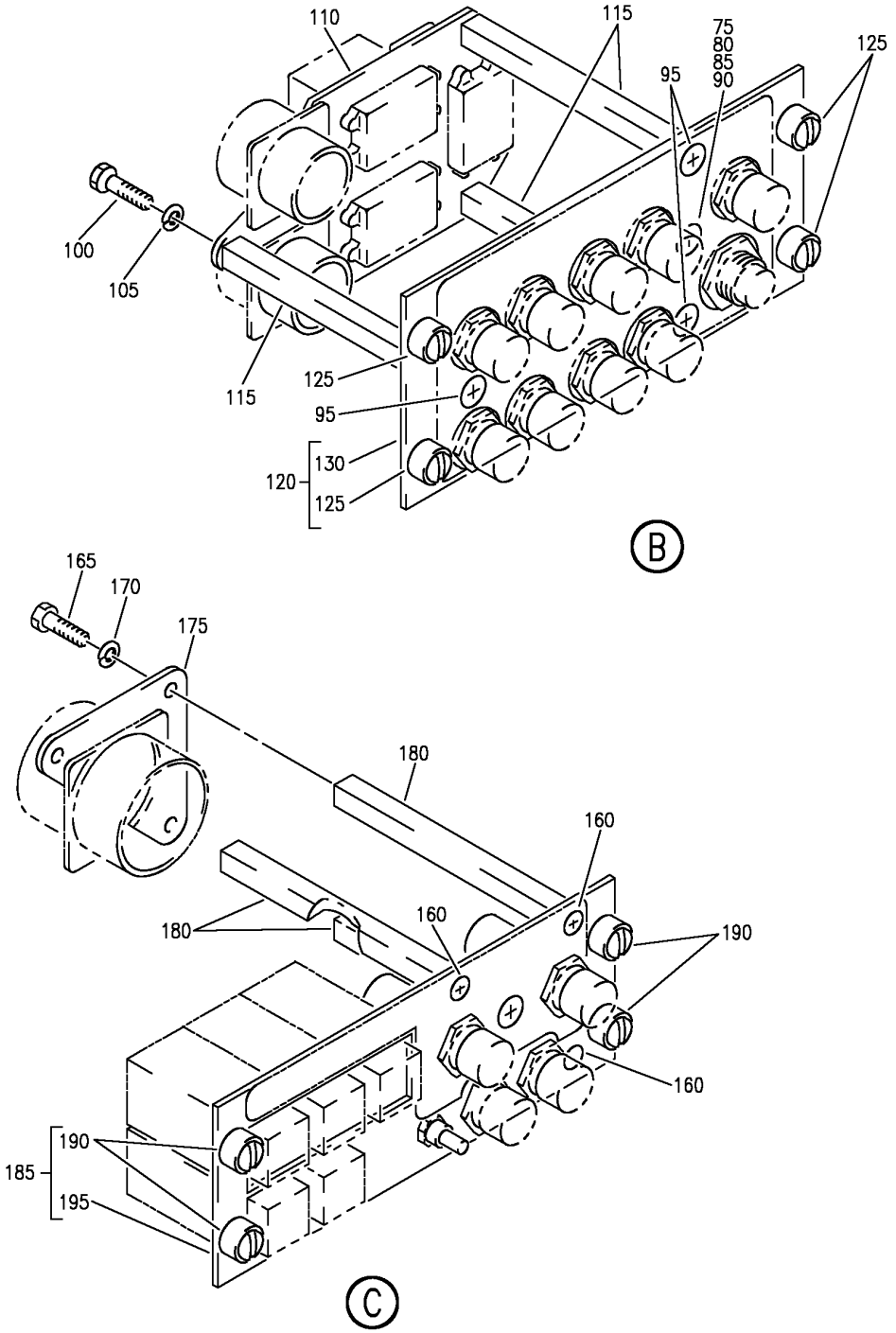

Y 31141674 SHT 2 REV 266

PANEL INSTL-P61 R SIDEWALL (PILOTS' RIGHT SIDE INSTRUMENT PANEL ONLY)
FIGURE 74 (SHEET 2)

BOEING PROPRIETARY - Copyright © - Unpublished Work - See title page for details.

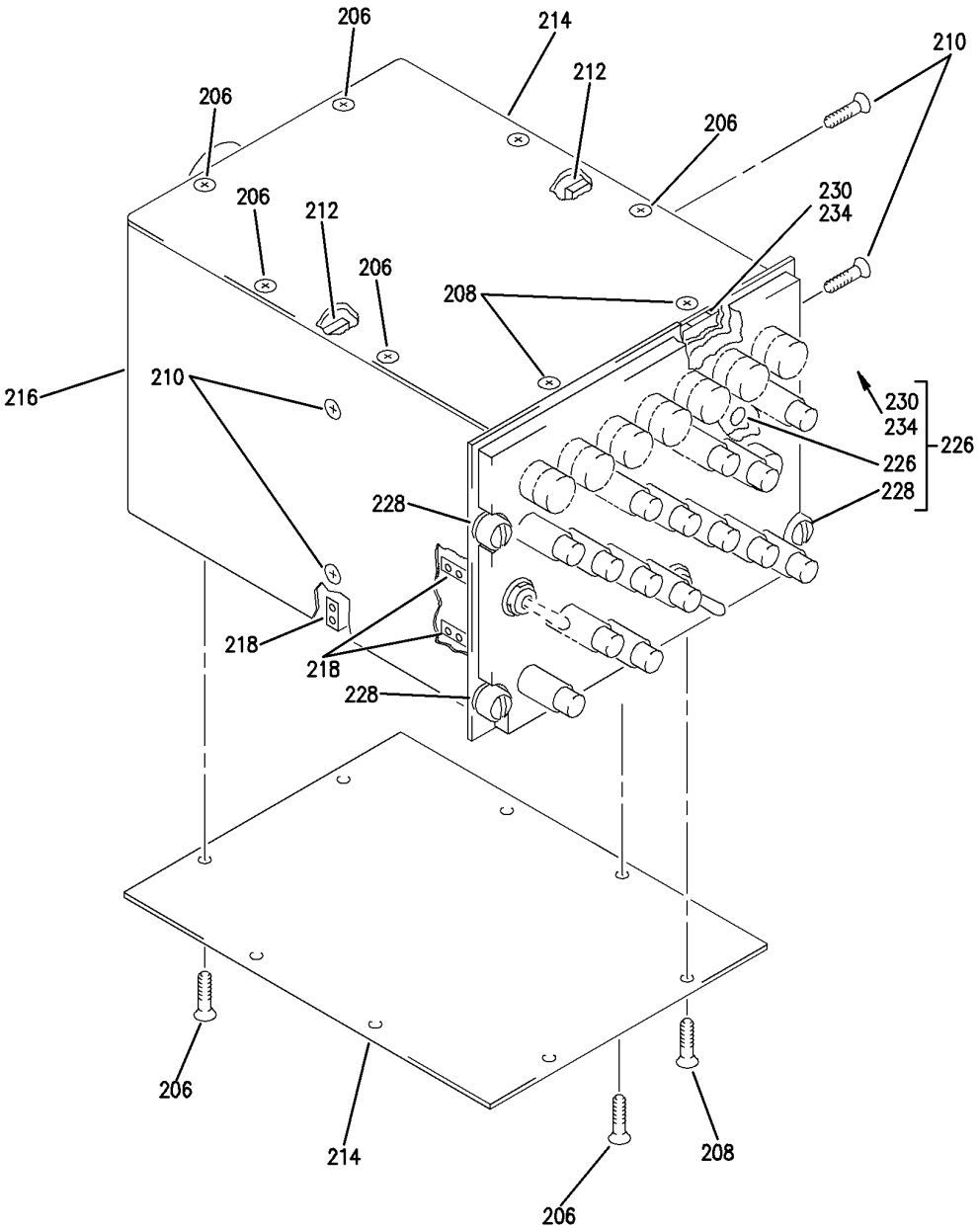

Y 31141674 SHT 3 REV 236

PANEL INSTL-P61 R SIDEWALL (PILOTS' RIGHT SIDE INSTRUMENT PANEL ONLY)
FIGURE 74 (SHEET 3)

BOEING PROPRIETARY - Copyright © - Unpublished Work - See title page for details.

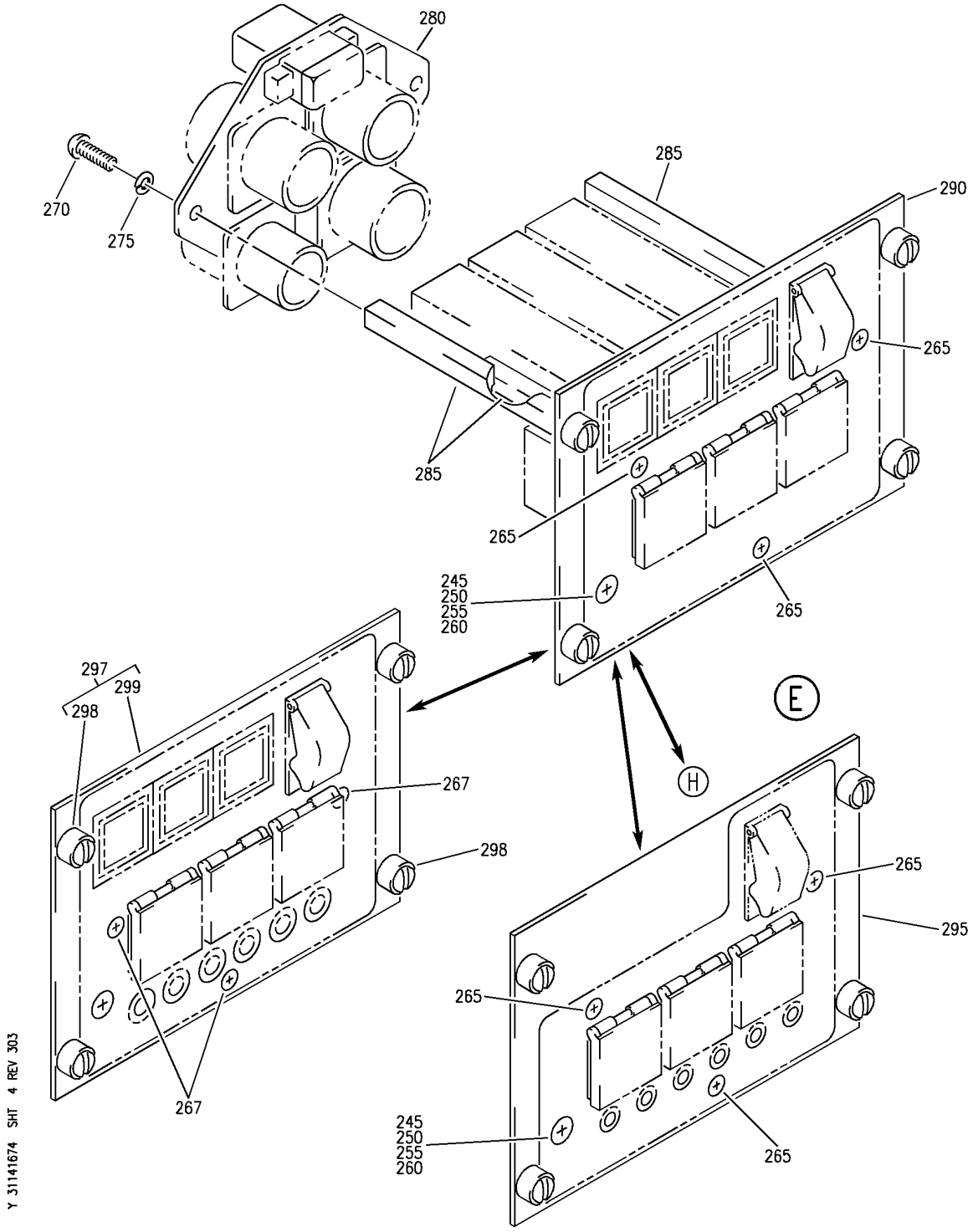

PANEL INSTL-P61 R SIDEWALL (PILOTS' RIGHT SIDE INSTRUMENT PANEL ONLY)
FIGURE 74 (SHEET 4)

BOEING PROPRIETARY - Copyright © - Unpublished Work - See title page for details.

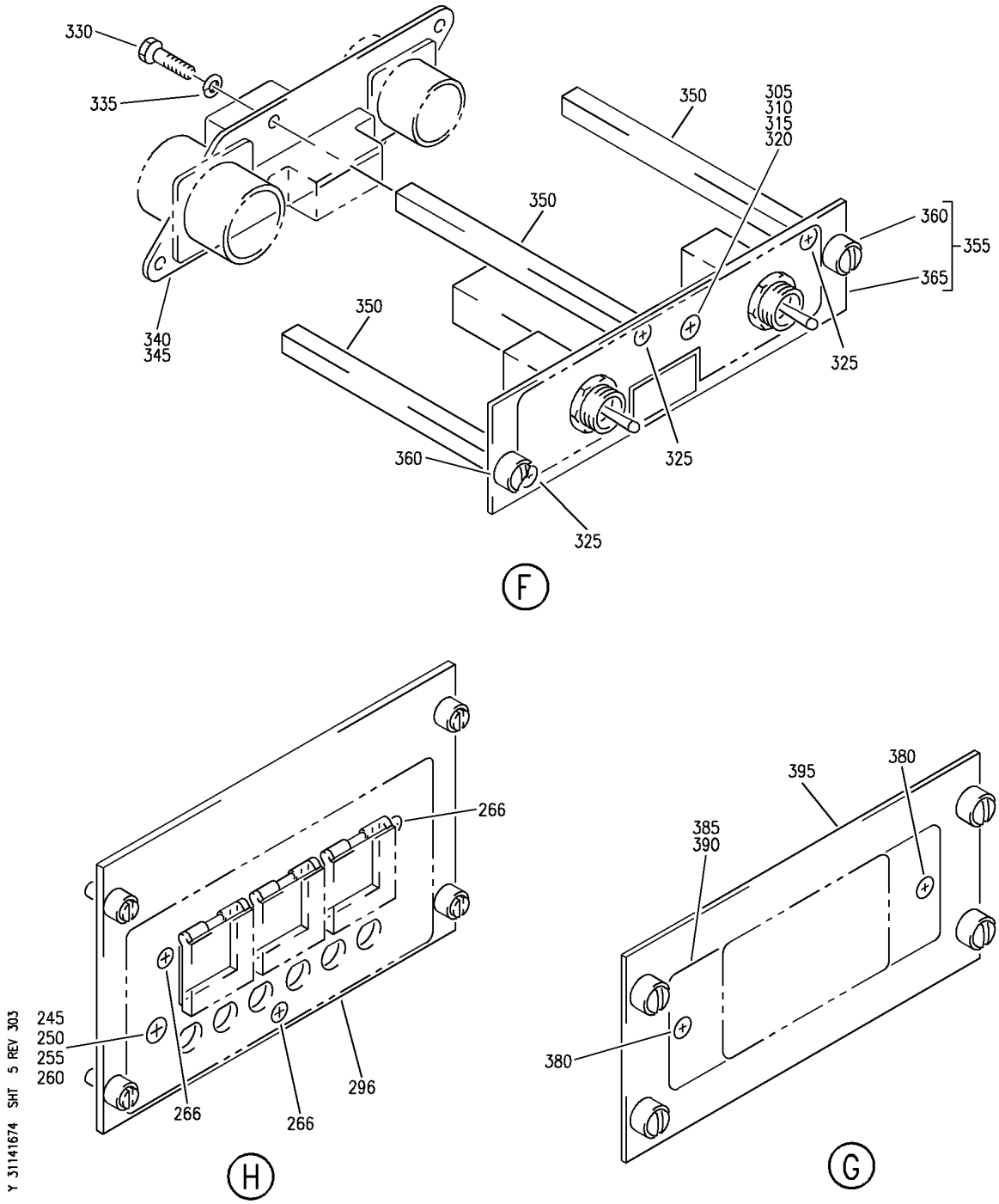

PANEL INSTL-P61 R SIDEWALL (PILOTS' RIGHT SIDE INSTRUMENT PANEL ONLY)
FIGURE 74 (SHEET 5)

BOEING PROPRIETARY - Copyright © - Unpublished Work - See title page for details.

FIG ITEM	PART NUMBER	1 2 3 4 5 6 7 NOMENCLATURE	EFFECT FROM TO	UNITS PER ASSY
74				
		PANEL INSTL-P61 R SIDEWALL (PILOTS' RIGHT SIDE INSTRUMENT PANEL ONLY)	002004 006100	
- 1	233N7401-1	PANEL INSTL-P61 SIDEWALL (PILOTS' RIGHT SIDE INSTRUMENT PANEL ONLY) POSITION DATA: R VARIABLE DRAWING REF: 233N7401-5038 FOR NHA/OTHER SYS DET SEE: 25-10-00-05A	002004 006100	RF
5	233N7501-36	.PANEL ASSY-TEST SUPPLIER CODE: V89954 ELECTRICAL EQUIP NUMBER: M10398 COMPONENT MAINT MANUAL REF: 31-51-61 QUALIFIED I/W DATA: 233N7501-36 CAN REPLACE 233N7501-35,BUT 233N7501-35 CANNOT REPLACE 233N7501-36 IF VICKER HMG, 520850 OR 3022008-000 IS INSTALLED. FOR OTHER SYS DETAILS SEE: 11-32-01-70 21-58-51-04 22-21-51-01 26-18-53-01 28-41-51-04 29-22-52-01 30-11-52-01 30-41-51-04 31-51-51-01 34-12-54-01	002004 006100	1
10	NAS514P1032-8	..SCREW	002004 006100	1
15	AN960D416	..WASHER	002004 006100	1
20	MS20341-10A	..NUT	002004 006100	1

MISSING ITEM NUMBERS NOT APPLICABLE

- ITEM NOT ILLUSTRATED

BOEING PROPRIETARY - Copyright © - Unpublished Work - See title page for details.

FIG ITEM	PART NUMBER	1 2 3 4 5 6 7 NOMENCLATURE	EFFECT FROM TO	UNITS PER ASSY
74				
25	BRH10A3	..NUT	002004	1
		SUPPLIER CODE:	006100	
		V52828		
		SPECIFICATION NUMBER:		
		BACN10JC3		
		OPTIONAL PART:		
		H10-3BAC		
		V15653		
		NS202101-02		
		V80539		
		RMLH9075-3W		
		V72962		
		VN303A02		
		V92215		
		96-02		
		V80539		
		T6S1032J		
		V11815		
30	NAS514P632-5	..SCREW	002004	3
			006100	
35	BACS12CB06-5	..SCREW	002004	3
			006100	
40	MS35338-41	..WASHER	002004	3
			006100	
45	233N3250-18	..BRACKET-SPRT	002004	1
			006100	
50	69B46200-5	..STANDOFF	002004	3
			006100	
55	233N7501-11	..BASEPLATE ASSY-	002004	1
		SUPPLIER CODE:	006100	
		V89954		
60	BACS21DD1B	...STUD ASSY	002004	4
		SUPPLIER CODE:	006100	
		V08524		
		SPECIFICATION NUMBER:		
		BACS21DD1B		
65	233N7501-12	...BASEPLATE-	002004	1
		SUPPLIER CODE:	006100	
		V89954		

MISSING ITEM NUMBERS NOT APPLICABLE

– ITEM NOT ILLUSTRATED

BOEING PROPRIETARY - Copyright © - Unpublished Work - See title page for details.

FIG ITEM	PART NUMBER	1 2 3 4 5 6 7 NOMENCLATURE	EFFECT FROM TO	UNITS PER ASSY
74				
70	233N7506-1	.PANEL ASSY-SQUIB TEST SUPPLIER CODE: V89954 ELECTRICAL EQUIP NUMBER: M10401 COMPONENT MAINT MANUAL REF: 26-21-52 FOR OTHER SYS DETAILS SEE: 11-32-01-70 26-21-52-02 26-22-52-02 26-23-52-03	002004 006100	1
75	NAS514P1032-10	..SCREW	002004 006100	1
80	AN960D416	..WASHER	002004 006100	1
85	MS20341-10A	..NUT	002004 006100	1
90	BRH10A3	..NUT SUPPLIER CODE: V52828 SPECIFICATION NUMBER: BACN10JC3 OPTIONAL PART: H10-3BAC V15653 NS202101-02 V80539 RMLH9075-3W V72962 VN303A02 V92215 96-02 V80539 T6S1032J V11815	002004 006100	1
95	NAS514P632-5	..SCREW	002004 006100	3
100	BACS12CB06-5	..SCREW	002004 006100	3
105	MS35338-41	..WASHER	002004 006100	3
110	233N3250-24	..BRACKET-SPRT	002004 006100	1
115	69B46200-5	..STANDOFF	002004 006100	3
120	233N7506-2	..BASEPLATE ASSY- SUPPLIER CODE: V89954	002004 006100	1

MISSING ITEM NUMBERS NOT APPLICABLE

– ITEM NOT ILLUSTRATED

BOEING PROPRIETARY - Copyright © - Unpublished Work - See title page for details.

FIG ITEM	PART NUMBER	1 2 3 4 5 6 7 NOMENCLATURE	EFFECT FROM TO	UNITS PER ASSY
74				
125	BACS21DD1B	...STUD ASSY SUPPLIER CODE: V08524 SPECIFICATION NUMBER: BACS21DD1B	002004 006100	4
130	233N7506-3	...BASEPLATE- SUPPLIER CODE: V89954	002004 006100	1
135	233N7509-1	.PANEL ASSY-EICAS MAINT SUPPLIER CODE: V89954 ELECTRICAL EQUIP NUMBER: M10372 COMPONENT MAINT MANUAL REF: 31-41-54 FOR OTHER SYS DETAILS SEE: 11-32-01-70 31-41-53-01	002004 006100	1
160	NAS514P632-5	..SCREW	002004 006100	3
165	BACS12HN06-5	..SCREW-	002004 006100	3
170	MS35338-41	..WASHER- OPTIONAL PART: BACW10EC06S	002004 006100	3
170	BACW10EC06S	..WASHER- OPTIONAL PART: MS35338-41	002004 006100	3
175	233N3250-5	..BRACKET-SPRT	002004 006100	1
180	69B46200-6	..STANDOFF	002004 006100	3
185	233N7509-2	..BASEPLATE ASSY- SUPPLIER CODE: V89954	002004 006100	1
190	BACS21DD1B	...STUD ASSY SUPPLIER CODE: V08524 SPECIFICATION NUMBER: BACS21DD1B	002004 006100	4
195	233N7509-3	...BASEPLATE- SUPPLIER CODE: V89954	002004 006100	1
200	BACP10U0187T	.PANEL ASSY	002004 006100	1

MISSING ITEM NUMBERS NOT APPLICABLE

– ITEM NOT ILLUSTRATED

BOEING PROPRIETARY - Copyright © - Unpublished Work - See title page for details.

FIG ITEM	PART NUMBER	1 2 3 4 5 6 7 NOMENCLATURE	EFFECT FROM TO	UNITS PER ASSY
74				
205	285T0022-44	.PANEL ASSY-AUDIO SELECTOR SUPPLIER CODE: V89954 ELECTRICAL EQUIP NUMBER: M00098 COMPONENT MAINT MANUAL REF: 23-51-54 FOR OTHER SYS DETAILS SEE: 11-32-01-70 23-51-01-04 33-13-61-01	002004 006100	1
206	NAS514P440-5	..SCREW	002004 006100	12
208	NAS514P632-5	..SCREW	002004 006100	4
210	NAS514P440-4	..SCREW	002004 006100	4
212	BACG20ZA350	..GROMMET	002004 006100	2
214	285T0179-47	..PANEL- SUPPLIER CODE: V89954	002004 006100	2
216	285T0179-48	..CHASSIS ASSY- SUPPLIER CODE: V89954	002004 006100	1
218	F22A27M22-40	...NUT-ANCHOR SUPPLIER CODE: V0217B ATTACHING PARTS	002004 006100	12
- 220	BACR15BA2AD	...RIVET- SIZE DETERMINED ON INSTL. -------*-------	002004 006100	24
224	285T0179-43	..PANEL ASSY-FRONT SUPPLIER CODE: V89954	002004 006100	1
226	SF6G6CBB5D	...NUT SUPPLIER CODE: V12324 SPECIFICATION NUMBER: BACN10PA06-6	002004 006100	3
228	D1400-6A1	...STUD ASSY SUPPLIER CODE: V08524 SPECIFICATION NUMBER: BACS21DD1	002004 006100	4
230	F19716-06	...NUT-ANCHOR SUPPLIER CODE: V15653	002004 006100	4

MISSING ITEM NUMBERS NOT APPLICABLE

- ITEM NOT ILLUSTRATED

BOEING PROPRIETARY - Copyright © - Unpublished Work - See title page for details.

FIG ITEM	PART NUMBER	1 2 3 4 5 6 7 NOMENCLATURE	EFFECT FROM TO	UNITS PER ASSY
74				
		ATTACHING PARTS		
- 232	BACR15BA2AD	...RIVET-	002004	8
		SIZE DETERMINED ON INSTL.	006100	
		-------*-------		
234	285T0179-45	...SPACER-	002004	4
		SUPPLIER CODE:	006100	
		V89954		
235	233N7503-47	.PANEL ASSY-GEN FIELD AND	002004	1
		HYDR		
		SUPPLIER CODE:		
		V89954		
		ELECTRICAL EQUIP NUMBER:		
		M10191		
		COMPONENT MAINT MANUAL REF:		
		24-22-73		
		FOR OTHER SYS DETAILS SEE:		
		11-32-01-70		
		24-22-73-01		
		27-23-51-01		
		29-22-52-01		
235	233N7503-53	.PANEL ASSY-GEN FIELD AND	011100	1
		HYDR		
		SUPPLIER CODE:		
		V89954		
		ELECTRICAL EQUIP NUMBER:		
		M10191		
		COMPONENT MAINT MANUAL REF:		
		24-22-73		
		FOR OTHER SYS DETAILS SEE:		
		11-32-01-70		
		24-22-73-01		
		27-23-51-01		
		29-22-52-01		
235	233N7503-56	.PANEL ASSY-GEN FIELD AND	002004	1
		HYDR	006010	
		SUPPLIER CODE:		
		V89954		
		ELECTRICAL EQUIP NUMBER:		
		M10191		
		COMPONENT MAINT MANUAL REF:		
		24-22-73		
		FOR OTHER SYS DETAILS SEE:		
		11-32-01-70		
		24-22-73-01		
		27-23-51-01		
		29-22-52-01		

MISSING ITEM NUMBERS NOT APPLICABLE

- ITEM NOT ILLUSTRATED

BOEING PROPRIETARY - Copyright © - Unpublished Work - See title page for details.

FIG ITEM	PART NUMBER	1 2 3 4 5 6 7 NOMENCLATURE	EFFECT FROM TO	UNITS PER ASSY
74				
235	233N7503-34	.PANEL ASSY-GEN FIELD AND HYDR SUPPLIER CODE: V89954 ELECTRICAL EQUIP NUMBER: M10191 COMPONENT MAINT MANUAL REF: 24-22-73 FOR OTHER SYS DETAILS SEE: 11-32-01-70 24-22-73-01 27-23-51-01 29-22-52-01	002004	1
235	233N7503-32	.PANEL ASSY-GEN FIELD AND HYDR SUPPLIER CODE: V89954 ELECTRICAL EQUIP NUMBER: M10191 COMPONENT MAINT MANUAL REF: 24-22-73 QUALIFIED I/W DATA: 233N7503-29 -31 -32 -44 -45 -46 ALL INTERCHANGEABLE EXCEPT SUBJECT TO CUSTOMER PREFERENCE -32 I/W -51 EXCEPT WHEN INSTALLING A -32 IN PLACE OF -51 FIELD GENERATOR SWITCHES S1, S2, S3 MUST BE MARKED INOPERABLE FOR OTHER SYS DETAILS SEE: 11-32-01-70 24-22-73-01 27-23-51-01 29-18-51-01 29-22-52-01	002004	1

MISSING ITEM NUMBERS NOT APPLICABLE

— ITEM NOT ILLUSTRATED

BOEING PROPRIETARY - Copyright © - Unpublished Work - See title page for details.

FIG ITEM	PART NUMBER	1 2 3 4 5 6 7 NOMENCLATURE	EFFECT FROM TO	UNITS PER ASSY
74				
235	233N7503-60	.PANEL ASSY-GEN FIELD AND HYDR SUPPLIER CODE: V89954 ELECTRICAL EQUIP NUMBER: M10191 COMPONENT MAINT MANUAL REF: 24-22-73 QUALIFIED I/W DATA: -50 I/W -60 EXCEPT WHEN INSTALLING A -50 IN PLACE OF -60 FIELD GENERATOR SWITCHES S1, S2, S3 MUST BE MARKED INOPERABLE. FOR OTHER SYS DETAILS SEE: 11-32-01-70 24-22-73-01 27-23-51-01	002004 006010	1
245	NAS514P1032-10	..SCREW	002004 006100	1
250	AN960D416	..WASHER- USED ON: 233N7503-34 233N7503-47 233N7503-53 233N7503-32	002004	1
250	NAS1149D0463H	..WASHER- USED ON: 233N7503-56 233N7503-53 233N7503-60	002004 006100	1
255	MS35650-305T	..NUT	002004 006100	1

MISSING ITEM NUMBERS NOT APPLICABLE

– ITEM NOT ILLUSTRATED

BOEING PROPRIETARY - Copyright © - Unpublished Work - See title page for details.

FIG ITEM	PART NUMBER	1 2 3 4 5 6 7 NOMENCLATURE	EFFECT FROM TO	UNITS PER ASSY
74				
260	BRH10A3	..NUT-	002004	1
		SUPPLIER CODE:	011100	
		V52828		
		SPECIFICATION NUMBER:		
		BACN10JC3		
		OPTIONAL PART:		
		H10-3BAC		
		V15653		
		NS202101-02		
		V80539		
		RMLH9075-3W		
		V72962		
		VN303A02		
		V92215		
		96-02		
		V80539		
		T6S1032J		
		V11815		
		USED ON:		
		233N7503-34		
		233N7503-47		
		233N7503-53		
		233N7503-32		
260	BRH10C3D	..NUT-	002004	1
		SUPPLIER CODE:	006010	
		V52828		
		SPECIFICATION NUMBER:		
		BACN10JC3CD		
		OPTIONAL PART:		
		T6C1032JCD		
		V11815		
		NS202486-02		
		V80539		
		102LH9075-3W		
		V72962		
		H51650-3BAC		
		V15653		
		USED ON:		
		233N7503-56		
		233N7503-60		
265	NAS514P632-5	..SCREW-	002004	3
		USED ON:	011100	
		233N7503-34		
		233N7503-47		
		233N7503-53		

MISSING ITEM NUMBERS NOT APPLICABLE

– ITEM NOT ILLUSTRATED

BOEING PROPRIETARY - Copyright © - Unpublished Work - See title page for details.

FIG ITEM	PART NUMBER	1 2 3 4 5 6 7 NOMENCLATURE	EFFECT FROM TO	UNITS PER ASSY
74				
265	NAS514P1032-5	..SCREW-	002004	3
		OPTIONAL PART:	006010	
		FH6C5CPL12BN		
		V12324		
		USED ON:		
		233N7503-56		
265	FH6C5CPL12BN	..SCREW-	002004	3
		SUPPLIER CODE:	006010	
		V12324		
		OPTIONAL PART:		
		NAS514P1032-5		
		USED ON:		
		233N7503-56		
266	FH6C5PL12BN	..SCREW-	002004	3
		SUPPLIER CODE:	006010	
		V12324		
		USED ON:		
		233N7503-60		
267	NAS514P632-5	..SCREW-	002004	3
		USED ON:		
		233N7503-32		
270	NAS1801-06-5	..SCREW-	002004	3
		OPTIONAL PART:	011100	
		BACS12HN06-5		
		USED ON:		
		233N7503-34		
		233N7503-47		
		233N7503-53		
270	MS51957-27	..SCREW-	002004	3
		USED ON:	006010	
		233N7503-56		
		233N7503-60		
270	BACS12HN06-5	..SCREW-	011100	3
		OPTIONAL PART:		
		NAS1801-06-5		
270	BACS12CB06-5	..SCREW-	002004	3
		USED ON:		
		233N7503-32		
275	MS35338-41	..WASHER-	002004	3
		USED ON:		
		233N7503-34		
		233N7503-47		
		233N7503-32		
275	MS35338-136	..WASHER-	002004	3
		OPTIONAL PART:	006010	
		BACW10EC06CD		
		USED ON:		
		233N7503-56		
275	BACW10EC06S	..WASHER-	011100	3

MISSING ITEM NUMBERS NOT APPLICABLE

— ITEM NOT ILLUSTRATED

BOEING PROPRIETARY - Copyright © - Unpublished Work - See title page for details.

FIG ITEM	PART NUMBER	1 2 3 4 5 6 7 NOMENCLATURE	EFFECT FROM TO	UNITS PER ASSY
74				
275	BACW10EC06CD	..WASHER-	002004	3
		OPTIONAL PART:	006010	
		MS35338-136		
		USED ON:		
		233N7503-56		
275	MS35338-136	..WASHER-	002004	3
		USED ON:	006010	
		233N7503-60		
280	233N3250-42	..BRACKET-SPRT	002004	1
		USED ON:	006100	
		233N7503-34		
		233N7503-47		
		233N7503-53		
		233N7503-56		
280	233N7503-23	..BRACKET ASSY-SPRT	002004	1
		SUPPLIER CODE:		
		V89954		
		USED ON:		
		233N7503-32		
280	233N7503-24	..BRACKET ASSY-SPRT	002004	1
		SUPPLIER CODE:	006010	
		V89954		
		USED ON:		
		233N7503-60		
285	69B46200-12	..STANDOFF	002004	3
			006100	
290	233N7503-35	..BASEPLATE ASSY-	002004	1
		SUPPLIER CODE:		
		V89954		
		ALTERED FROM PART NUMBER:		
		BACP10U0375T		
		USED ON:		
		233N7503-34		
		233N7503-47		
295	233N7503-54	..BASEPLATE ASSY-	011100	1
		SUPPLIER CODE:		
		V89954		
295	233N7503-58	..BASEPLATE ASSY-	002004	1
		SUPPLIER CODE:	006010	
		V89954		
		ALTERED FROM PART NUMBER:		
		BACP10U0375T		
		MANUFACTURED FROM:		
		BACP10U0375T		
		USED ON:		
		233N7503-56		

MISSING ITEM NUMBERS NOT APPLICABLE

– ITEM NOT ILLUSTRATED

BOEING PROPRIETARY - Copyright © - Unpublished Work - See title page for details.

FIG ITEM	PART NUMBER	1 2 3 4 5 6 7 NOMENCLATURE	EFFECT FROM TO	UNITS PER ASSY
74				
296	233N7503-61	..BASEPLATE ASSY- SUPPLIER CODE: V89954 ALTERED FROM PART NUMBER: BACP10U0375T USED ON: 233N7503-60	002004 006010	1
297	233N7503-15	..BASEPLATE ASSY- SUPPLIER CODE: V89954 USED ON: 233N7503-32	002004	1
298	BACS21DD1B	...STUD ASSY- SUPPLIER CODE: V08524 SPECIFICATION NUMBER: BACS21DD1B USED ON: 233N7503-32	002004	4
299	233N7503-16	...BASEPLATE- SUPPLIER CODE: V89954 USED ON: 233N7503-32	002004	1
300	233N7508-14	.PANEL ASSY-FLIGHT RECORDER /SVCE INTPH SUPPLIER CODE: V89954 ELECTRICAL EQUIP NUMBER: M00033 COMPONENT MAINT MANUAL REF: 31-31-52 OPTIONAL PART: 233N7508-7 V89954 FOR OTHER SYS DETAILS SEE: 11-32-01-70 23-41-52-01 31-31-04-01	002004 006100	1
305	NAS514P1032-10	..SCREW	002004 006100	1
310	NAS1149D0463H	..WASHER-	002004 006100	1
315	MS35650-305T	..NUT-	002004 006100	1

MISSING ITEM NUMBERS NOT APPLICABLE

— ITEM NOT ILLUSTRATED

BOEING PROPRIETARY - Copyright © - Unpublished Work - See title page for details.

FIG ITEM	PART NUMBER	1 2 3 4 5 6 7 NOMENCLATURE	EFFECT FROM TO	UNITS PER ASSY
74				
320	BRH10C3D	..NUT-	002004	1
		SUPPLIER CODE:	006100	
		V52828		
		SPECIFICATION NUMBER:		
		BACN10JC3CD		
		OPTIONAL PART:		
		T6C1032JCD		
		V11815		
		NS202486-02		
		V80539		
		102LH9075-3W		
		V72962		
		H51650-3BAC		
		V15653		
325	NAS514P632-5	..SCREW	002004	3
			006100	
330	NAS1801-06-5	..SCREW-	002004	3
			006100	
335	BACW10EC06S	..WASHER-	002004	3
			006100	
350	69B46200-8	..STANDOFF	002004	3
			006100	
355	233N7508-2	..BASEPLATE ASSY-	002004	1
		SUPPLIER CODE:	006100	
		V89954		
360	BACS21DD1B	...STUD ASSY	002004	2
		SUPPLIER CODE:	006100	
		V08524		
		SPECIFICATION NUMBER:		
		BACS21DD1B		
365	233N7508-3	...BASEPLATE-	002004	1
		SUPPLIER CODE:	006100	
		V89954		
368	BACP10U0075T	.PANEL ASSY	002004	1
			006010	
368	BACP10U0037T	.PANEL ASSY	011100	1
370	BACP10U090OT	.PANEL ASSY	002004	1
			006100	

MISSING ITEM NUMBERS NOT APPLICABLE

– ITEM NOT ILLUSTRATED

BOEING PROPRIETARY - Copyright © - Unpublished Work - See title page for details.

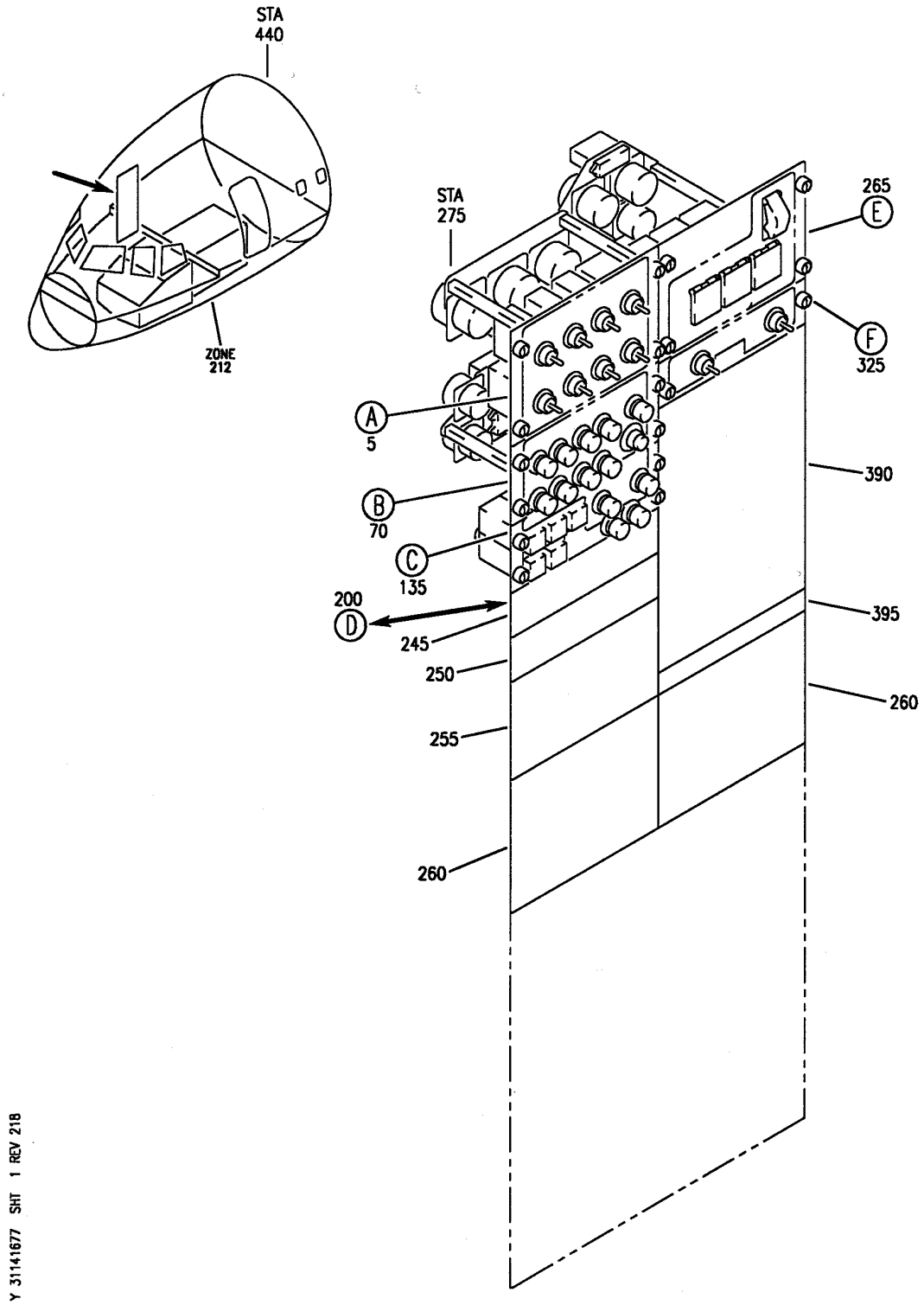

PANEL INSTL-P61 RIGHT SIDE (PILOTS' RIGHT SIDE INSTRUMENT PANEL ONLY)
FIGURE 77 (SHEET 1)

BOEING PROPRIETARY - Copyright © - Unpublished Work - See title page for details.

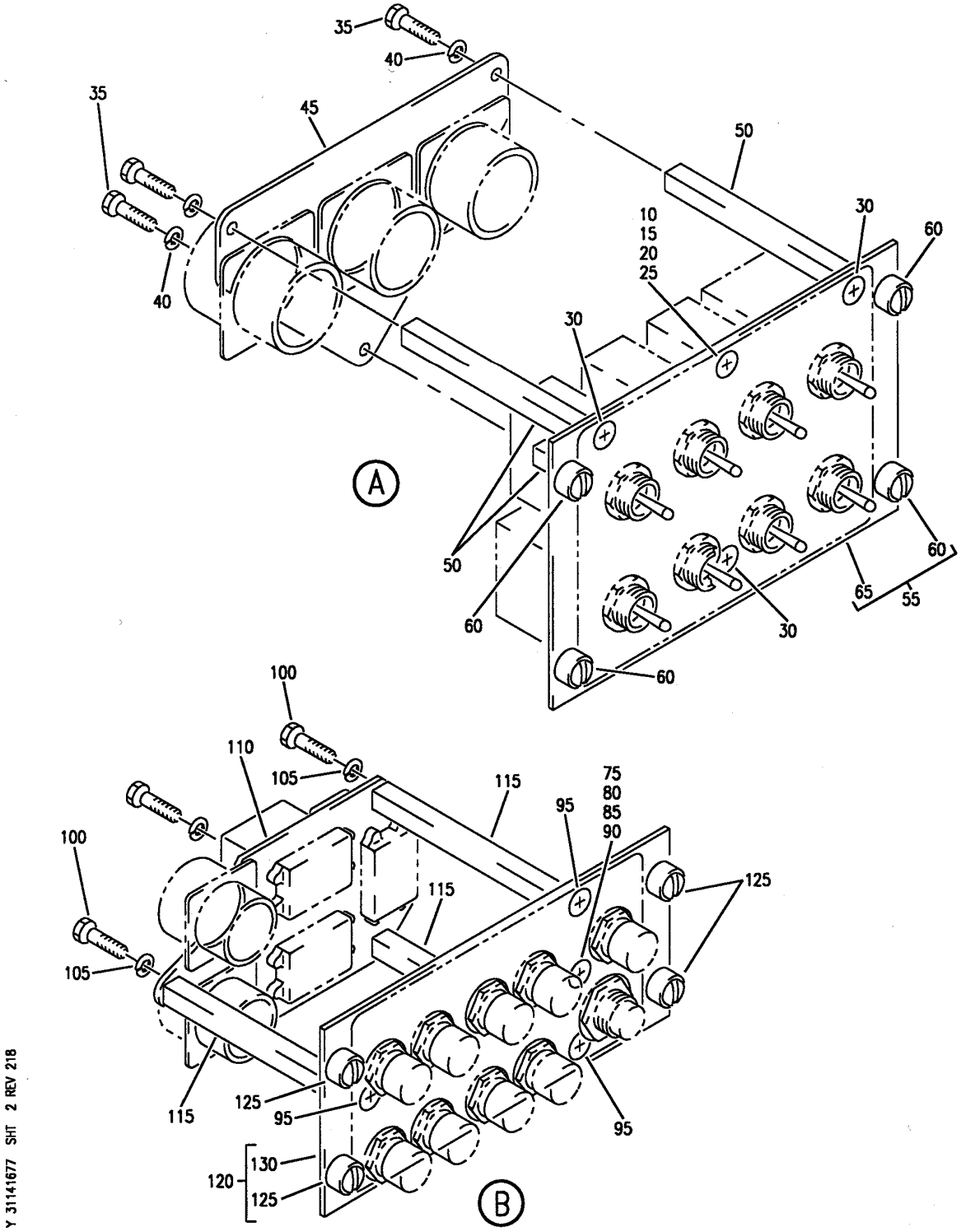

PANEL INSTL-P61 RIGHT SIDE (PILOTS' RIGHT SIDE INSTRUMENT PANEL ONLY)
FIGURE 77 (SHEET 2)

BOEING PROPRIETARY - Copyright © - Unpublished Work - See title page for details.

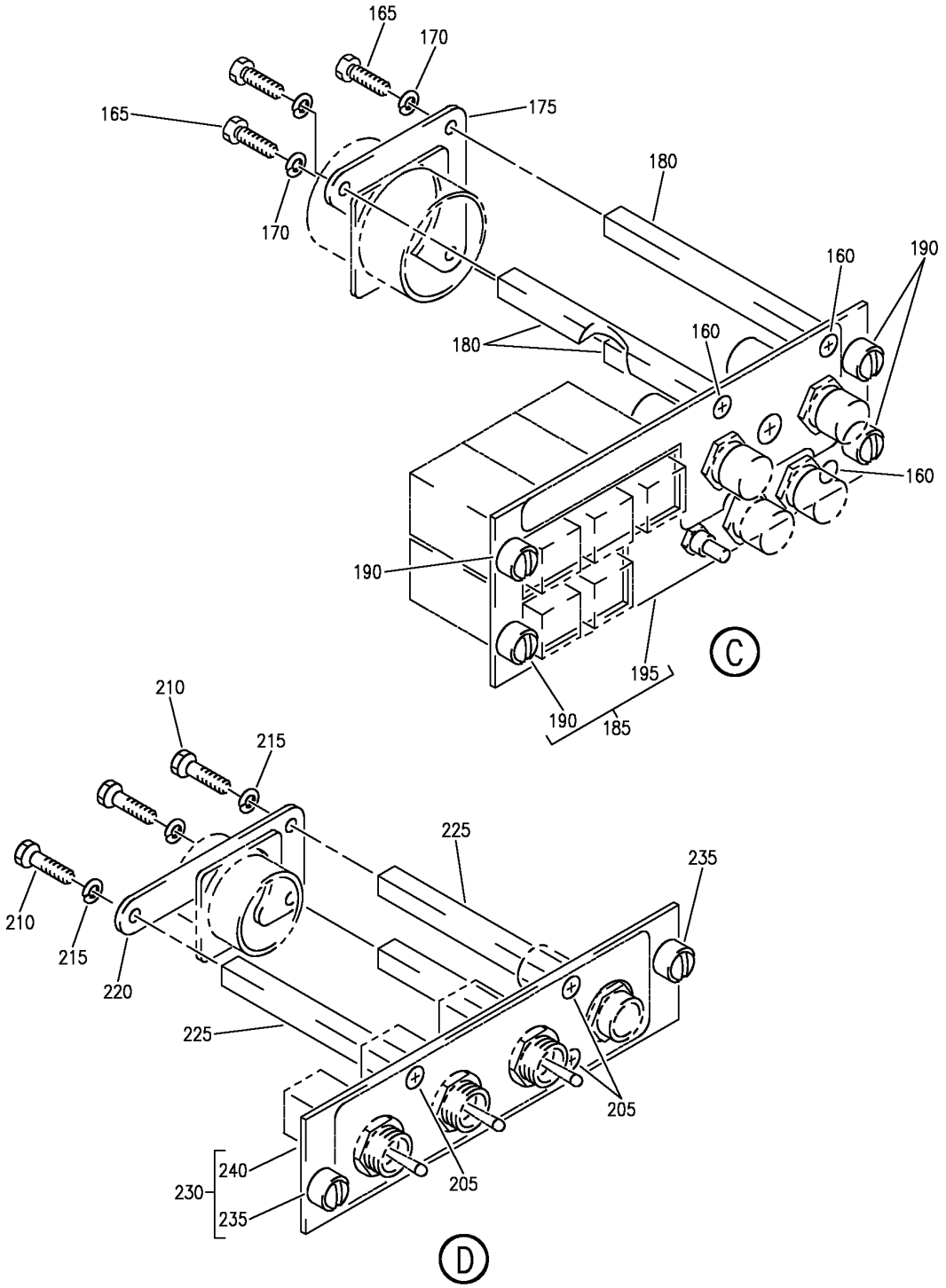

PANEL INSTL-P61 RIGHT SIDE (PILOTS' RIGHT SIDE INSTRUMENT PANEL ONLY)
FIGURE 77 (SHEET 3)

BOEING PROPRIETARY - Copyright © - Unpublished Work - See title page for details.

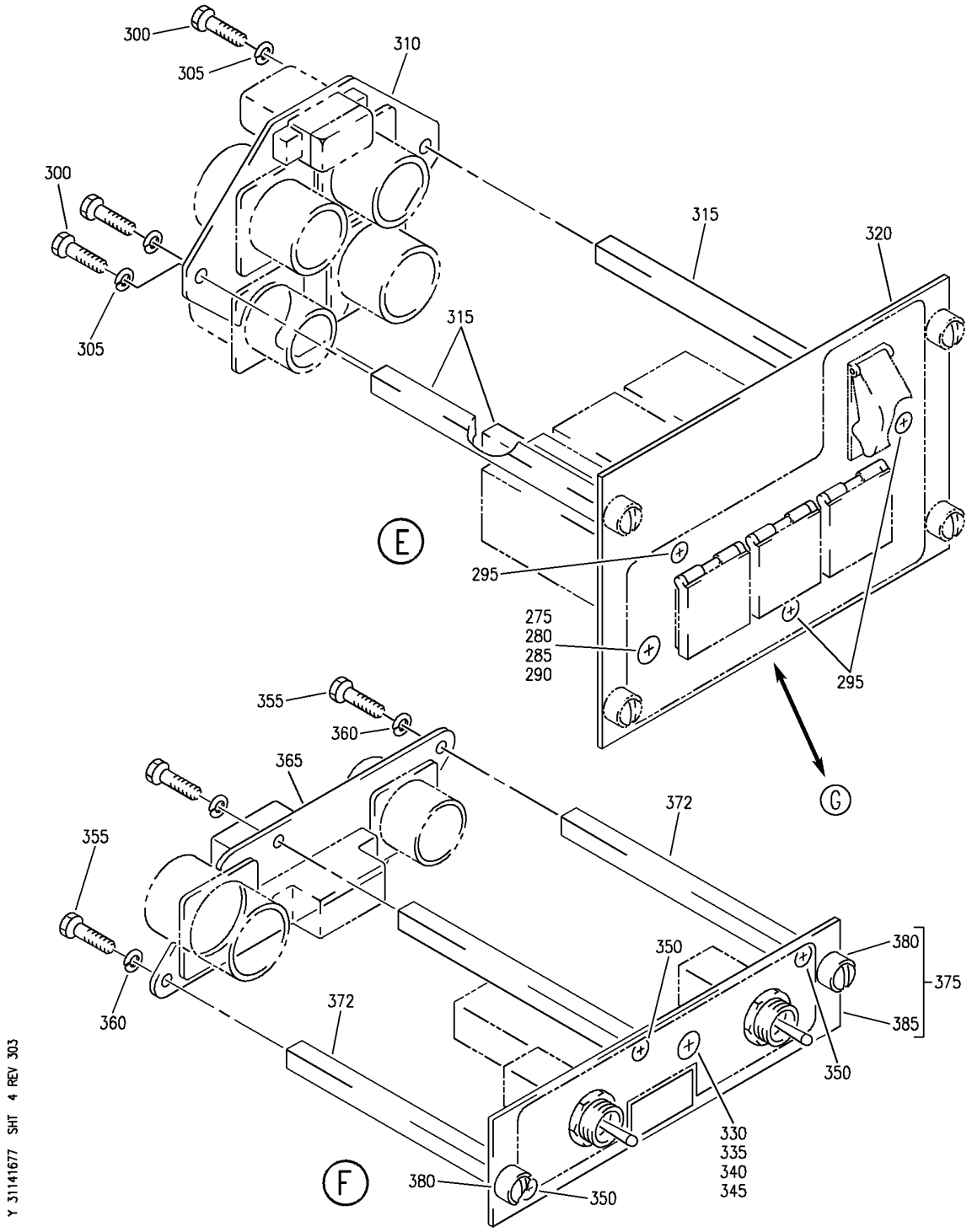

PANEL INSTL-P61 RIGHT SIDE (PILOTS' RIGHT SIDE INSTRUMENT PANEL ONLY)
FIGURE 77 (SHEET 4)

BOEING PROPRIETARY - Copyright © - Unpublished Work - See title page for details.

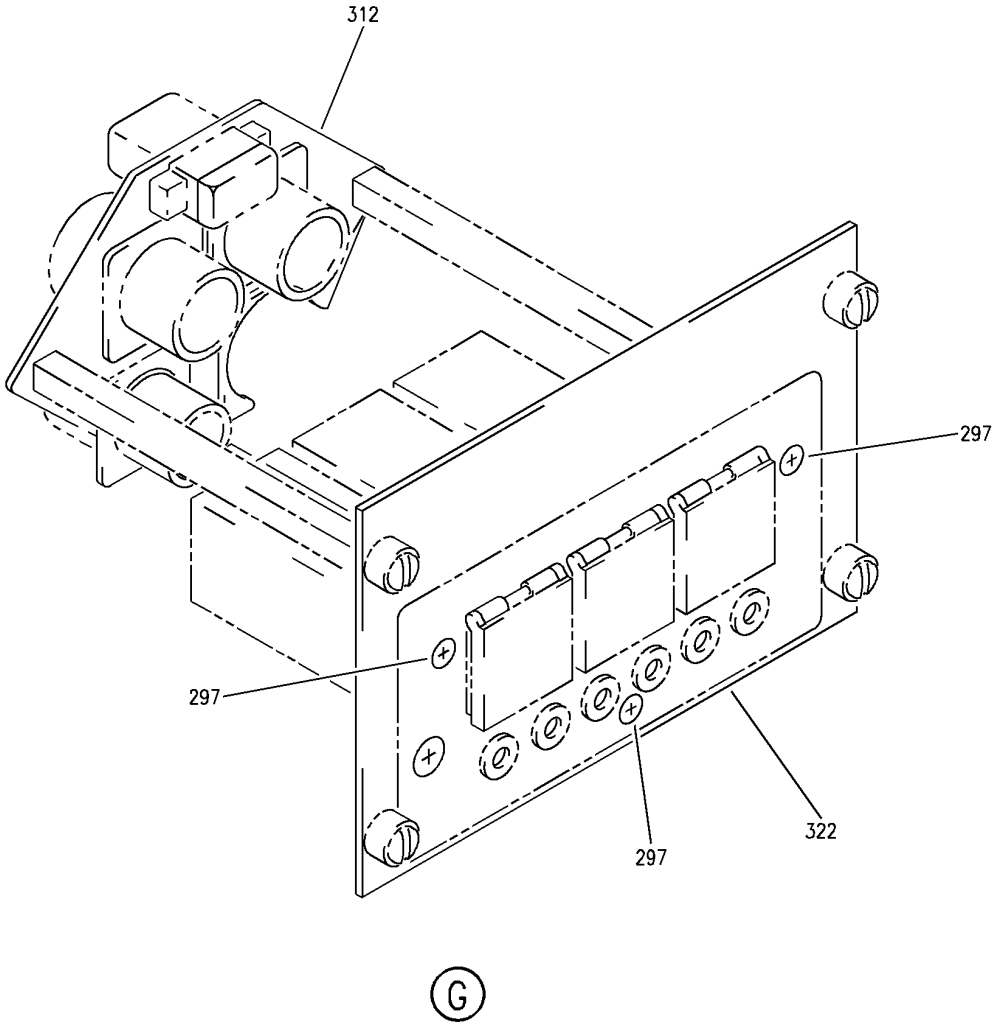

Y 31141677 SHT 5 REV 303

PANEL INSTL-P61 RIGHT SIDE (PILOTS' RIGHT SIDE INSTRUMENT PANEL ONLY)
FIGURE 77 (SHEET 5)

BOEING PROPRIETARY - Copyright © - Unpublished Work - See title page for details.

FIG ITEM	PART NUMBER	1 2 3 4 5 6 7 NOMENCLATURE	EFFECT FROM TO	UNITS PER ASSY
77				
		PANEL INSTL-P61 RIGHT SIDE	950951	
		(PILOTS' RIGHT SIDE		
		INSTRUMENT PANEL ONLY)		
- 1	233N7401-1	PANEL INSTL-P61	950951	RF
		(PILOTS' RIGHT SIDE		
		INSTRUMENT PANEL ONLY)		
		POSITION DATA:		
		R		
		VARIABLE DRAWING REF:		
		233N7401-5042		
		FOR NHA/OTHER SYS DET SEE:		
		25-10-00-05A		
5	233N7501-23	.PANEL ASSY-TEST	950951	1
		SUPPLIER CODE:		
		V89954		
		NOT APPROVED FOR ETOPS.		
		ELECTRICAL EQUIP NUMBER:		
		M10398		
		COMPONENT MAINT MANUAL REF:		
		31-51-61		
		FOR OTHER SYS DETAILS SEE:		
		11-32-01-73		
		21-58-51-04		
		22-21-51-01		
		26-18-53-01		
		28-41-51-04		
		30-11-52-01		
		30-41-51-04		
		31-51-51-01		
		34-12-54-01		
		34-46-51-05		
10	NAS514P1032-8	..SCREW	950951	1
15	AN960D416	..WASHER	950951	1
20	MS20341-10A	..NUT	950951	1

MISSING ITEM NUMBERS NOT APPLICABLE

- ITEM NOT ILLUSTRATED

BOEING PROPRIETARY - Copyright © - Unpublished Work - See title page for details.

FIG ITEM	PART NUMBER	1 2 3 4 5 6 7 NOMENCLATURE	EFFECT FROM TO	UNITS PER ASSY
77				
25	BRH10A3	..NUT	950951	1
		SUPPLIER CODE:		
		V52828		
		SPECIFICATION NUMBER:		
		BACN10JC3		
		OPTIONAL PART:		
		H10-3BAC		
		V15653		
		NS202101-02		
		V80539		
		RMLH9075-3W		
		V72962		
		VN303A02		
		V92215		
		96-02		
		V80539		
		T6S1032J		
		V11815		
30	NAS514P632-5	..SCREW	950951	3
35	BACS12CB06-5	..SCREW	950951	3
40	MS35338-41	..WASHER	950951	3
45	233N3250-18	..BRACKET-SPRT	950951	1
50	69B46200-5	..STANDOFF	950951	3
55	233N7501-11	..BASEPLATE ASSY-	950951	1
		SUPPLIER CODE:		
		V89954		
60	BACS21DD1B	...STUD ASSY	950951	4
		SUPPLIER CODE:		
		V08524		
		SPECIFICATION NUMBER:		
		BACS21DD1B		
65	233N7501-12	...BASEPLATE-	950951	1
		SUPPLIER CODE:		
		V89954		
70	233N7506-1	.PANEL ASSY-SQUIB TEST	950951	1
		SUPPLIER CODE:		
		V89954		
		ELECTRICAL EQUIP NUMBER:		
		M10401		
		COMPONENT MAINT MANUAL REF:		
		26-21-52		
		FOR OTHER SYS DETAILS SEE:		
		11-32-01-73		
		26-21-52-02		
		26-22-52-02		
		26-23-52-03		
75	NAS514P1032-10	..SCREW	950951	1
80	AN960D416	..WASHER	950951	1
85	MS20341-10A	..NUT	950951	1

MISSING ITEM NUMBERS NOT APPLICABLE

– ITEM NOT ILLUSTRATED

BOEING PROPRIETARY - Copyright © - Unpublished Work - See title page for details.

FIG ITEM	PART NUMBER	1 2 3 4 5 6 7 NOMENCLATURE	EFFECT FROM TO	UNITS PER ASSY
77				
90	BRH10A3	..NUT	950951	1
		SUPPLIER CODE:		
		V52828		
		SPECIFICATION NUMBER:		
		BACN10JC3		
		OPTIONAL PART:		
		H10-3BAC		
		V15653		
		NS202101-02		
		V80539		
		RMLH9075-3W		
		V72962		
		VN303A02		
		V92215		
		96-02		
		V80539		
		T6S1032J		
		V11815		
95	NAS514P632-5	..SCREW	950951	3
100	BACS12CB06-5	..SCREW	950951	3
105	MS35338-41	..WASHER	950951	3
110	233N3250-24	..BRACKET-SPRT	950951	1
115	69B46200-5	..STANDOFF	950951	3
120	233N7506-2	..BASEPLATE ASSY-	950951	1
		SUPPLIER CODE:		
		V89954		
125	BACS21DD1B	...STUD ASSY	950951	4
		SUPPLIER CODE:		
		V08524		
		SPECIFICATION NUMBER:		
		BACS21DD1B		
130	233N7506-3	...BASEPLATE-	950951	1
		SUPPLIER CODE:		
		V89954		
135	233N7509-1	.PANEL ASSY-EICAS MAINT	950951	1
		SUPPLIER CODE:		
		V89954		
		ELECTRICAL EQUIP NUMBER:		
		M10372		
		COMPONENT MAINT MANUAL REF:		
		31-41-54		
		FOR OTHER SYS DETAILS SEE:		
		11-32-01-73		
		31-41-53-01		
160	NAS514P632-5	..SCREW	950951	3
165	BACS12HN06-5	..SCREW-	950951	3
170	MS35338-41	..WASHER-	950951	3
		OPTIONAL PART:		
		BACW10EC06S		

MISSING ITEM NUMBERS NOT APPLICABLE

— ITEM NOT ILLUSTRATED

BOEING PROPRIETARY - Copyright © - Unpublished Work - See title page for details.

FIG ITEM	PART NUMBER	1 2 3 4 5 6 7 NOMENCLATURE	EFFECT FROM TO	UNITS PER ASSY
77				
170	BACW10EC06S	..WASHER-	950951	3
		OPTIONAL PART:		
		MS35338-41		
175	233N3250-5	..BRACKET-SPRT	950951	1
180	69B46200-6	..STANDOFF	950951	3
185	233N7509-2	..BASEPLATE ASSY-	950951	1
		SUPPLIER CODE:		
		V89954		
190	BACS21DD1B	...STUD ASSY	950951	4
		SUPPLIER CODE:		
		V08524		
		SPECIFICATION NUMBER:		
		BACS21DD1B		
195	233N7509-3	...BASEPLATE-	950951	1
		SUPPLIER CODE:		
		V89954		
200	233N7511-1	.PANEL ASSY-MAINT CONT	950951	1
		DISPLAY		
		SUPPLIER CODE:		
		V89954		
		ELECTRICAL EQUIP NUMBER:		
		M10489		
		COMPONENT MAINT MANUAL REF:		
		22-41-01		
		POST AIRLINE MOD:		
		E02293R098		
		VALP		
		FOR OTHER SYS DETAILS SEE:		
		11-32-01-73		
		22-41-51-01		
205	NAS514P632-5	..SCREW	950951	3
210	BACS12CB06-5	..SCREW	950951	3
215	MS35338-41	..WASHER	950951	3
220	233N3250-33	..BRACKET-SPRT	950951	1
225	69B46200-4	..STANDOFF	950951	3
230	233N7511-2	..BASEPLATE ASSY-	950951	1
		SUPPLIER CODE:		
		V89954		
235	BACS21DD1B	...STUD ASSY	950951	2
		SUPPLIER CODE:		
		V08524		
		SPECIFICATION NUMBER:		
		BACS21DD1B		
240	233N7511-3	...BASEPLATE-	950951	1
		SUPPLIER CODE:		
		V89954		
245	BACP10U0150T	.PANEL ASSY	950951	1
250	BACP10U0150T	.PANEL ASSY	950951	1
255	BACP10U0337T	.PANEL ASSY	950951	1

MISSING ITEM NUMBERS NOT APPLICABLE

— ITEM NOT ILLUSTRATED

BOEING PROPRIETARY - Copyright © - Unpublished Work - See title page for details.

FIG ITEM	PART NUMBER	1 2 3 4 5 6 7 NOMENCLATURE	EFFECT FROM TO	UNITS PER ASSY
77				
260	BACP10U0450T	.PANEL ASSY	950951	2
265	233N7503-56	.PANEL ASSY-GEN FIELD AND HYDR SUPPLIER CODE: V89954 ELECTRICAL EQUIP NUMBER: M10191 COMPONENT MAINT MANUAL REF: 24-22-73 FOR OTHER SYS DETAILS SEE: 11-32-01-73 24-22-73-01 27-23-51-01 29-22-52-01	950951	1
265	233N7503-60	.PANEL ASSY-GEN FIELD AND HYDR SUPPLIER CODE: V89954 ELECTRICAL EQUIP NUMBER: M10191 COMPONENT MAINT MANUAL REF: 24-22-73 QUALIFIED I/W DATA: -50 I/W -60 EXCEPT WHEN INSTALLING A -50 IN PLACE OF -60 FIELD GENERATOR SWITCHES S1, S2, S3 MUST BE MARKED INOPERABLE. FOR OTHER SYS DETAILS SEE: 11-32-01-73 24-22-73-01 27-23-51-01	950951	1
275	NAS514P1032-10	..SCREW	950951	1
280	NAS1149D0463H	..WASHER	950951	1
285	MS35650-305T	..NUT	950951	1

MISSING ITEM NUMBERS NOT APPLICABLE

– ITEM NOT ILLUSTRATED

BOEING PROPRIETARY - Copyright © - Unpublished Work - See title page for details.

FIG ITEM	PART NUMBER	1 2 3 4 5 6 7 NOMENCLATURE	EFFECT FROM TO	UNITS PER ASSY
77				
290	BRH10C3D	..NUT SUPPLIER CODE: V52828 SPECIFICATION NUMBER: BACN10JC3CD OPTIONAL PART: T6C1032JCD V11815 NS202486-02 V80539 102LH9075-3W V72962 H51650-3BAC V15653	950951	1
295	NAS514P1032-5	..SCREW- OPTIONAL PART: FH6C5CPL12BN V12324 USED ON: 233N7503-56	950951	3
295	FH6C5CPL12BN	..SCREW- SUPPLIER CODE: V12324 OPTIONAL PART: NAS514P1032-5 USED ON: 233N7503-56	950951	3
297	FH6C5PL12BN	..SCREW- SUPPLIER CODE: V12324	950951	3
300	MS51957-27	..SCREW	950951	3
305	MS35338-136	..WASHER- OPTIONAL PART: BACW10EC06CD USED ON: 233N7503-56	950951	3
305	BACW10EC06CD	..WASHER- OPTIONAL PART: MS35338-136 USED ON: 233N7503-56	950951	3
305	MS35338-136	..WASHER- USED ON: 233N7503-60	950951	3
310	233N3250-42	..BRACKET-SPRT USED ON: 233N7503-56	950951	1

MISSING ITEM NUMBERS NOT APPLICABLE

– ITEM NOT ILLUSTRATED

BOEING PROPRIETARY - Copyright © - Unpublished Work - See title page for details.

FIG ITEM	PART NUMBER	1 2 3 4 5 6 7 NOMENCLATURE	EFFECT FROM TO	UNITS PER ASSY
77				
312	233N7503-24	..BRACKET ASSY-SPRT SUPPLIER CODE: V89954	950951	1
315	69B46200-12	..STANDOFF	950951	3
320	233N7503-58	..BASEPLATE ASSY- SUPPLIER CODE: V89954 ALTERED FROM PART NUMBER: BACP10U0375T MANUFACTURED FROM: BACP10U0375T USED ON: 233N7503-56	950951	1
322	233N7503-61	..BASEPLATE ASSY- SUPPLIER CODE: V89954 ALTERED FROM PART NUMBER: BACP10U0375T	950951	1
325	233N7508-14	.PANEL ASSY-FLIGHT RECORDER /SVCE INTPH SUPPLIER CODE: V89954 ELECTRICAL EQUIP NUMBER: M00033 COMPONENT MAINT MANUAL REF: 31-31-52 OPTIONAL PART: 233N7508-7 V89954 FOR OTHER SYS DETAILS SEE: 11-32-01-73 23-41-52-01 31-31-04-01	950951	1
325	233N7508-7	.PANEL ASSY-FLIGHT RECORDER /SVCE INTPH SUPPLIER CODE: V89954 ELECTRICAL EQUIP NUMBER: M00033 COMPONENT MAINT MANUAL REF: 31-31-52 OPTIONAL PART: 233N7508-14 V89954 FOR OTHER SYS DETAILS SEE: 11-32-01-73 23-41-52-01 31-31-04-01	950951	1
330	NAS514P1032-10	..SCREW	950951	1

MISSING ITEM NUMBERS NOT APPLICABLE

– ITEM NOT ILLUSTRATED

BOEING PROPRIETARY - Copyright © - Unpublished Work - See title page for details.

FIG ITEM	PART NUMBER	1 2 3 4 5 6 7 NOMENCLATURE	EFFECT FROM TO	UNITS PER ASSY
77				
335	AN960D416	..WASHER-	950951	1
		USED ON:		
		233N7508-7		
335	NAS1149D0463H	..WASHER-	950951	1
		USED ON:		
		233N7508-14		
340	MS20341-10A	..NUT-	950951	1
		USED ON:		
		233N7508-7		
340	MS35650-305T	..NUT-	950951	1
		USED ON:		
		233N7508-14		
345	BRH10A3	..NUT-	950951	1
		SUPPLIER CODE:		
		V52828		
		SPECIFICATION NUMBER:		
		BACN10JC3		
		OPTIONAL PART:		
		H10-3BAC		
		V15653		
		NS202101-02		
		V80539		
		RMLH9075-3W		
		V72962		
		VN303A02		
		V92215		
		96-02		
		V80539		
		T6S1032J		
		V11815		
		USED ON:		
		233N7508-7		
345	BRH10C3D	..NUT-	950951	1
		SUPPLIER CODE:		
		V52828		
		SPECIFICATION NUMBER:		
		BACN10JC3CD		
		OPTIONAL PART:		
		T6C1032JCD		
		V11815		
		NS202486-02		
		V80539		
		102LH9075-3W		
		V72962		
		H51650-3BAC		
		V15653		
		USED ON:		
		233N7508-14		
350	NAS514P632-5	..SCREW	950951	3

MISSING ITEM NUMBERS NOT APPLICABLE

– ITEM NOT ILLUSTRATED

BOEING PROPRIETARY - Copyright © - Unpublished Work - See title page for details.

FIG ITEM	PART NUMBER	1 2 3 4 5 6 7 NOMENCLATURE	EFFECT FROM TO	UNITS PER ASSY
77				
355	BACS12CB06-5	..SCREW-	950951	3
		USED ON:		
		233N7508-7		
355	NAS1801-06-5	..SCREW-	950951	3
		USED ON:		
		233N7508-14		
360	MS35338-41	..WASHER-	950951	3
		USED ON:		
		233N7508-7		
360	BACW10EC06S	..WASHER-	950951	3
		USED ON:		
		233N7508-14		
365	233N7508-4	..BRACKET ASSY-	950951	1
		SUPPLIER CODE:		
		V89954		
372	69B46200-8	.STANDOFF	950951	3
375	233N7508-2	..BASEPLATE ASSY-	950951	1
		SUPPLIER CODE:		
		V89954		
380	BACS21DD1B	...STUD ASSY	950951	2
		SUPPLIER CODE:		
		V08524		
		SPECIFICATION NUMBER:		
		BACS21DD1B		
385	233N7508-3	...BASEPLATE-	950951	1
		SUPPLIER CODE:		
		V89954		
390	BACP10U0900T	.PANEL ASSY	950951	1
395	BACP10U0075T	.PANEL ASSY	950951	1

MISSING ITEM NUMBERS NOT APPLICABLE

– ITEM NOT ILLUSTRATED

BOEING PROPRIETARY - Copyright © - Unpublished Work - See title page for details.

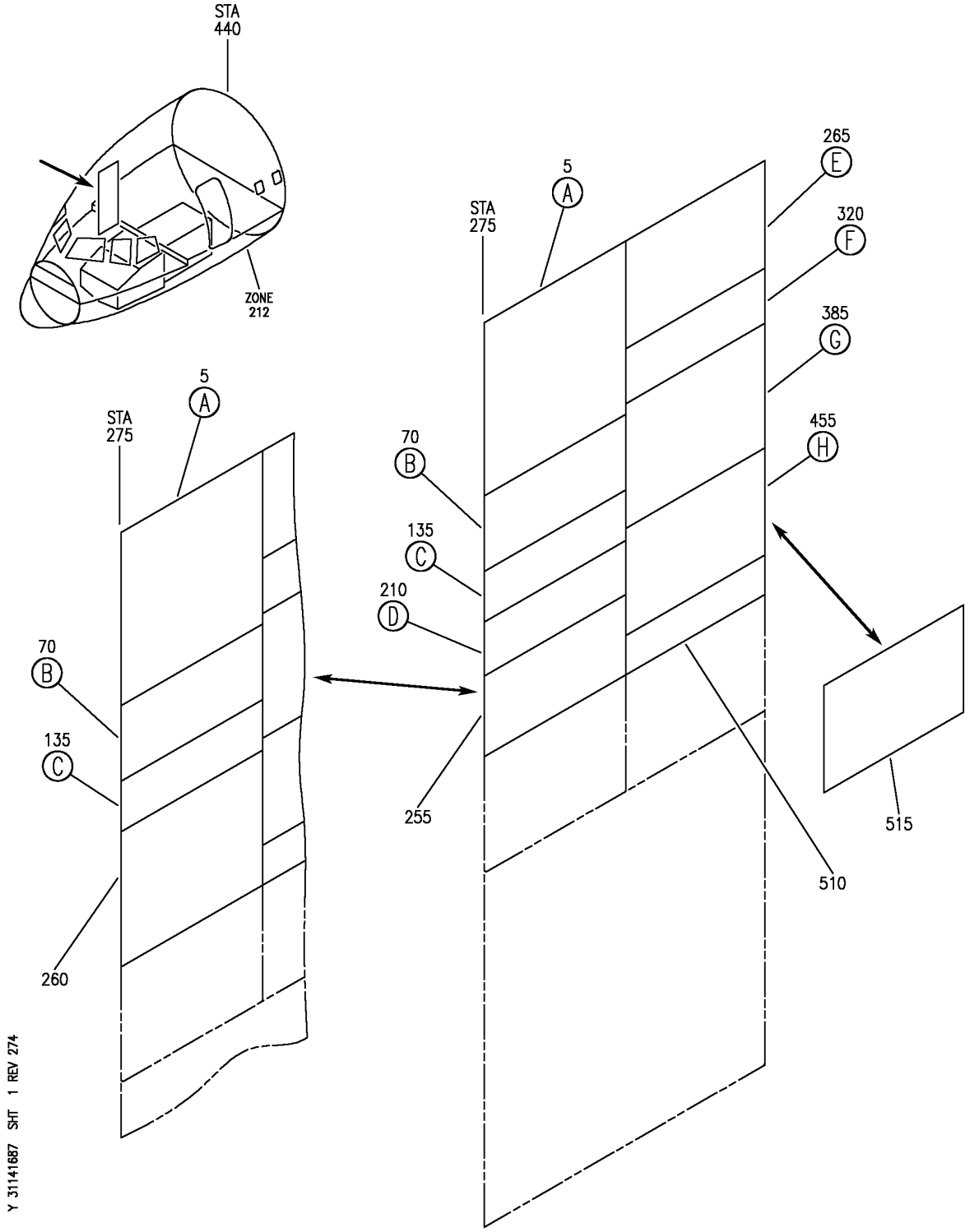

PANEL INSTL-P61 R SIDEWALL (PILOTS' RIGHT SIDE INSTRUMENT PANEL ONLY)
FIGURE 87 (SHEET 1)

BOEING PROPRIETARY - Copyright © - Unpublished Work - See title page for details.

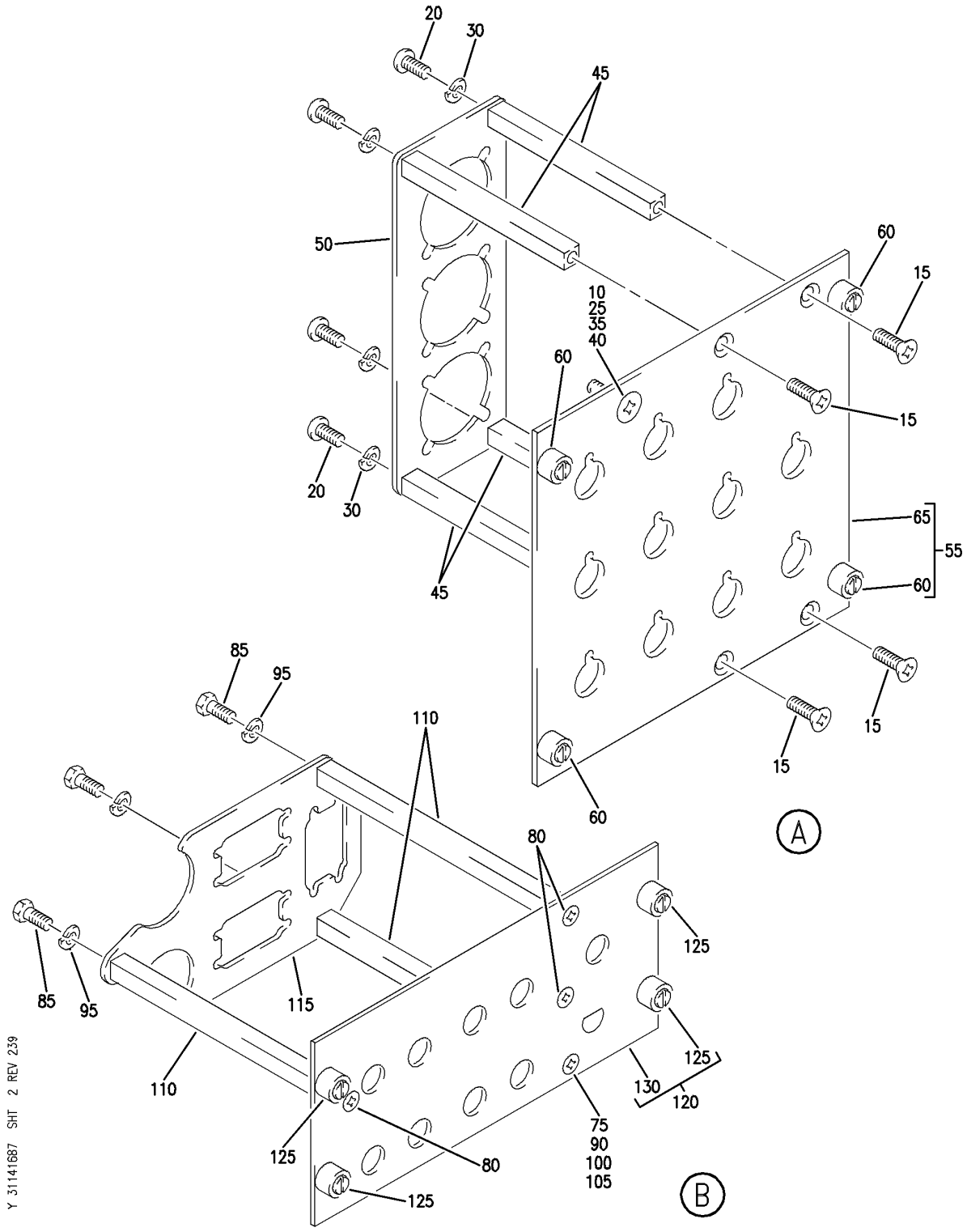

PANEL INSTL-P61 R SIDEWALL (PILOTS' RIGHT SIDE INSTRUMENT PANEL ONLY)
FIGURE 87 (SHEET 2)

BOEING PROPRIETARY - Copyright © - Unpublished Work - See title page for details.

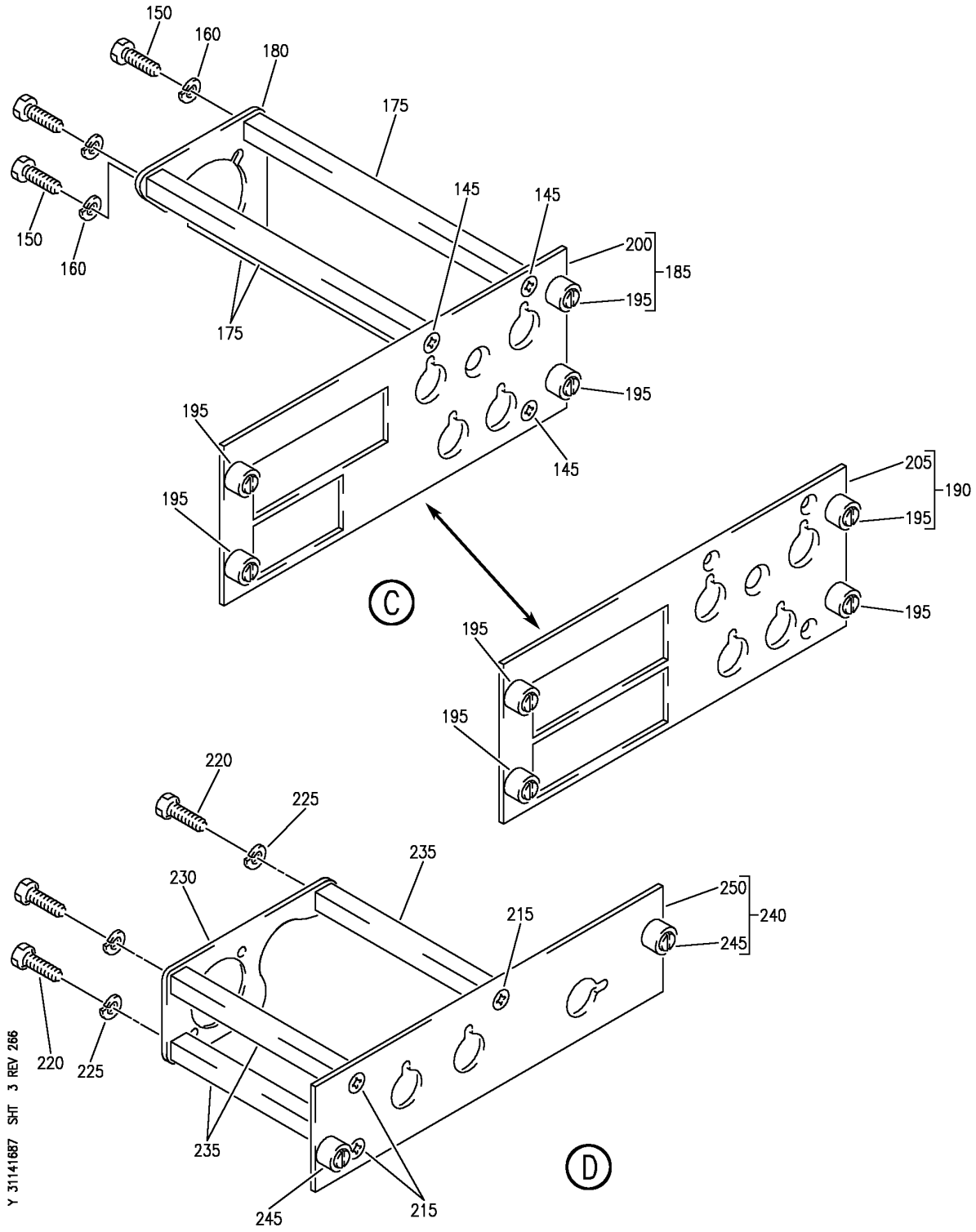

PANEL INSTL-P61 R SIDEWALL (PILOTS' RIGHT SIDE INSTRUMENT PANEL ONLY)
FIGURE 87 (SHEET 3)

BOEING PROPRIETARY - Copyright © - Unpublished Work - See title page for details.

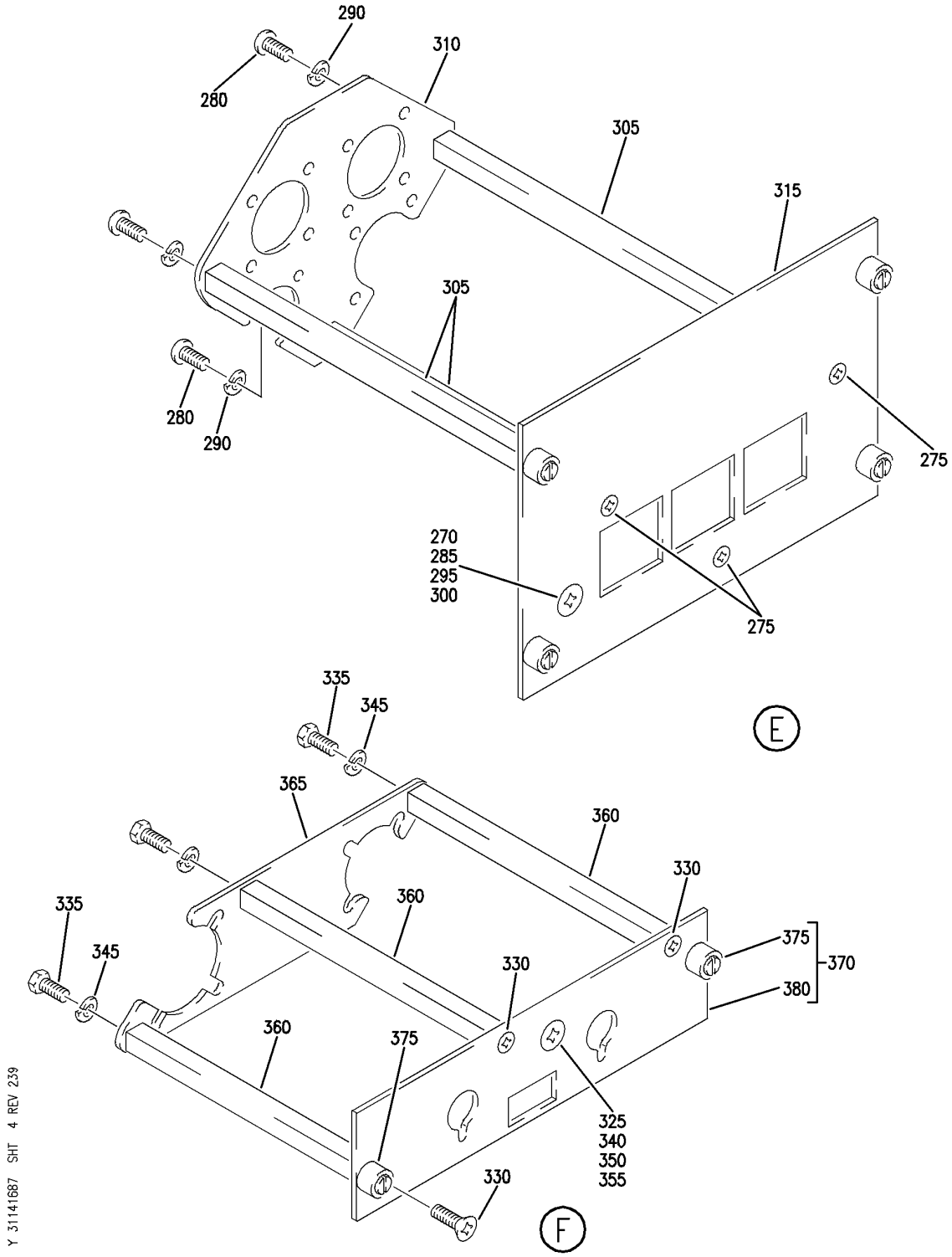

PANEL INSTL-P61 R SIDEWALL (PILOTS' RIGHT SIDE INSTRUMENT PANEL ONLY)
FIGURE 87 (SHEET 4)

BOEING PROPRIETARY - Copyright © - Unpublished Work - See title page for details.

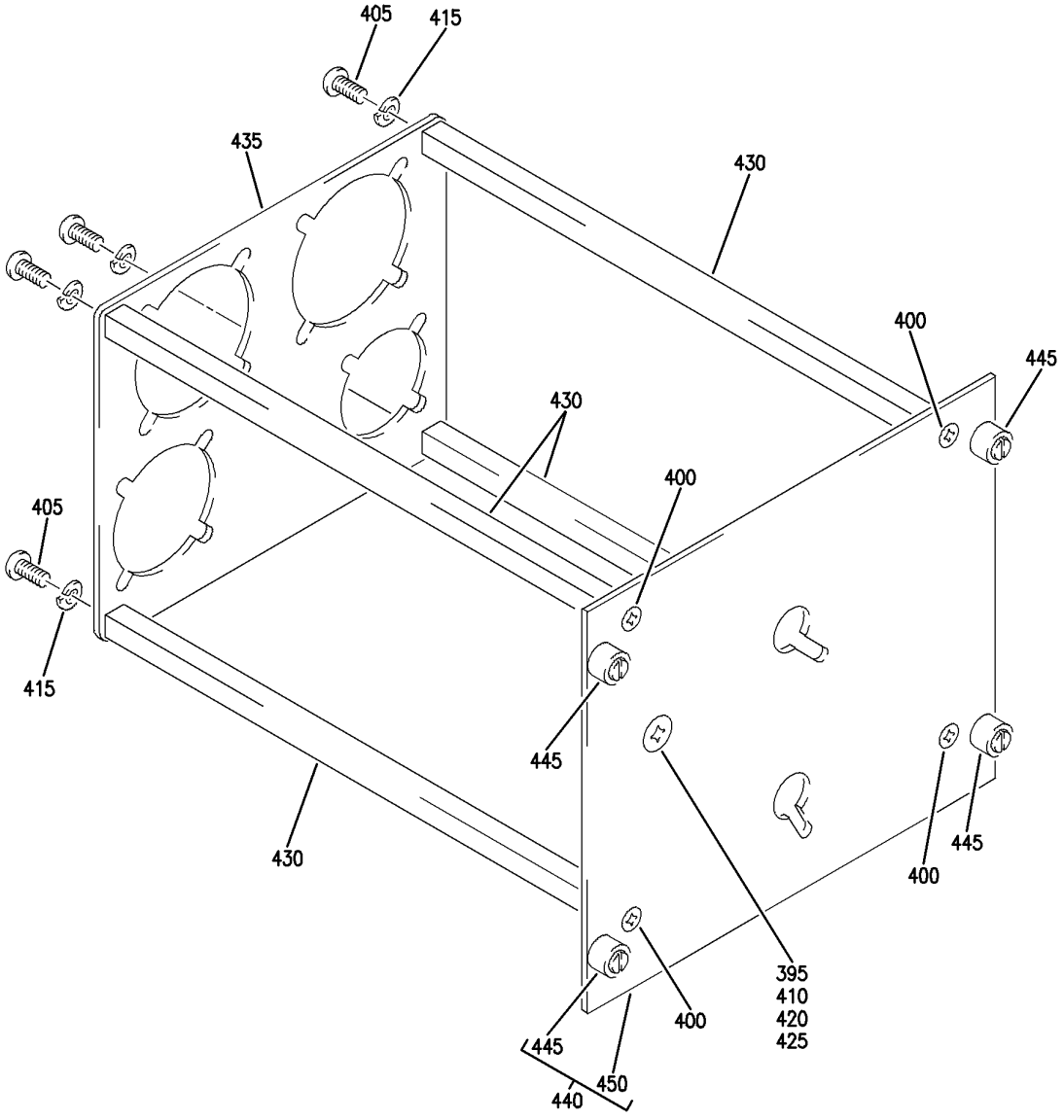

Y 31141687 SHT 5 REV 239

PANEL INSTL-P61 R SIDEWALL (PILOTS' RIGHT SIDE INSTRUMENT PANEL ONLY)
FIGURE 87 (SHEET 5)

BOEING PROPRIETARY - Copyright © - Unpublished Work - See title page for details.

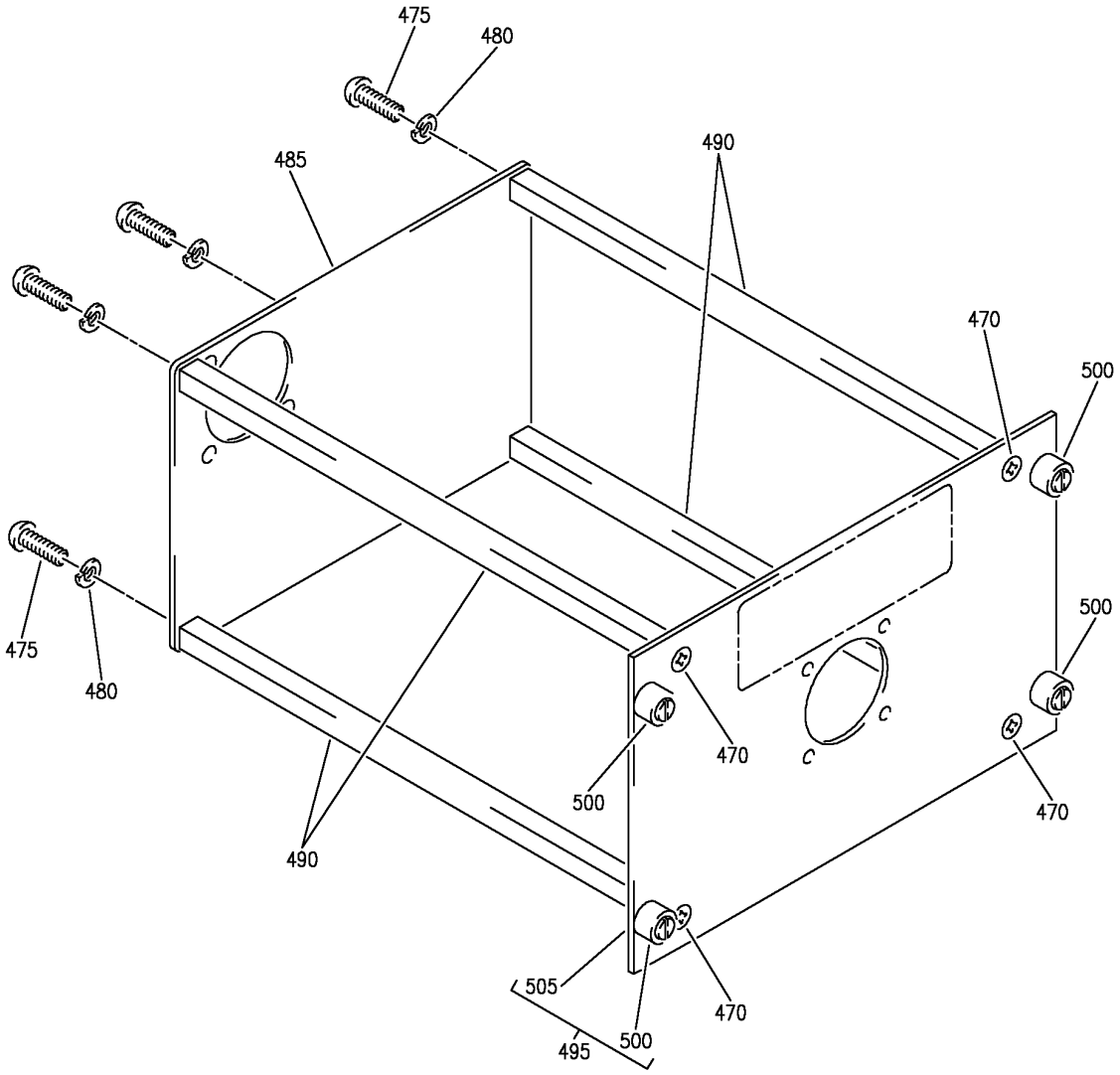

Y 31141887 SHT 6 REV 274

H

PANEL INSTL-P61 R SIDEWALL (PILOTS' RIGHT SIDE INSTRUMENT PANEL ONLY)
FIGURE 87 (SHEET 6)

BOEING PROPRIETARY - Copyright © - Unpublished Work - See title page for details.

FIG ITEM	PART NUMBER	1 2 3 4 5 6 7 NOMENCLATURE	EFFECT FROM TO	UNITS PER ASSY
87				
		PANEL INSTL-P61 R SIDEWALL	103106	
		(PILOTS' RIGHT SIDE		
		INSTRUMENT PANEL ONLY)		
- 1	MODREF33342	PANEL INSTL-	103106	1
		(PILOTS' RIGHT SIDE		
		INSTRUMENT PANEL ONLY)		
		MODULE NUMBER:		
		233N7403-171 REV A		
		FOR OTHER SYS DETAILS SEE:		
		11-32-01-98		
		21-58-51-04		
		22-21-51-01		
		23-41-52-01		
		24-22-73-02		
		26-18-53-02		
		26-21-52-01		
		26-22-52-01		
		26-23-52-03		
		27-23-51-02		
		28-41-51-04		
		29-22-52-01		
		30-11-52-01		
		30-41-51-04		
		31-31-04-01		
		31-41-53-01		
		31-51-51-01		
		34-12-54-01		
		34-21-51-02		
		34-46-51-05		
		34-61-53-03		

MISSING ITEM NUMBERS NOT APPLICABLE

- ITEM NOT ILLUSTRATED

BOEING PROPRIETARY - Copyright © - Unpublished Work - See title page for details.

FIG ITEM	PART NUMBER	1 2 3 4 5 6 7 NOMENCLATURE	EFFECT FROM TO	UNITS PER ASSY
87				
5	233N7501-41	.PANEL ASSY-TEST	103106	1
		SUPPLIER CODE:		
		V89954		
		ELECTRICAL EQUIP NUMBER:		
		M10398		
		COMPONENT MAINT MANUAL REF:		
		31-51-61		
		FOR OTHER SYS DETAILS SEE:		
		11-32-01-98		
		21-58-51-04		
		22-21-51-01		
		26-18-53-02		
		28-41-51-04		
		29-22-52-01		
		30-11-52-01		
		30-41-51-04		
		31-51-51-01		
		34-12-54-01		
		34-21-51-02		
		34-46-51-05		
10	NAS514P1032-10	..SCREW	103106	1
15	FH6C6CPL12BN	..SCREW-	103106	4
		SUPPLIER CODE:		
		V12324		
20	MS51957-27	..SCREW	103106	4
25	NAS1149D0463H	..WASHER	103106	1
30	MS35338-136	..WASHER	103106	4
35	MS35650-305T	..NUT	103106	1
40	BRH10C3D	..NUT	103106	1
		SUPPLIER CODE:		
		V52828		
		SPECIFICATION NUMBER:		
		BACN10JC3CD		
		OPTIONAL PART:		
		T6C1032JCD		
		V11815		
		NS202486-02		
		V80539		
		102LH9075-3W		
		V72962		
		H51650-3BAC		
		V15653		
45	69B46200-5	..STANDOFF	103106	4
50	233T6200-225	..BRACKET-SPRT	103106	1
55	233N7501-39	..BASEPLATE ASSY-	103106	1
		SUPPLIER CODE:		
		V89954		

MISSING ITEM NUMBERS NOT APPLICABLE

— ITEM NOT ILLUSTRATED

BOEING PROPRIETARY - Copyright © - Unpublished Work - See title page for details.

FIG ITEM	PART NUMBER	1 2 3 4 5 6 7 NOMENCLATURE	EFFECT FROM TO	UNITS PER ASSY
87				
60	PFSC35-38ASEMB	...STUD ASSY	103106	4
		SUPPLIER CODE:		
		V72794		
		SPECIFICATION NUMBER:		
		BACS21DX1B		
65	BACP10U0562N	...BASEPLATE	103106	1
70	233N7506-1	.PANEL ASSY-SQUIB TEST	103106	1
		SUPPLIER CODE:		
		V89954		
		ELECTRICAL EQUIP NUMBER:		
		M10401		
		COMPONENT MAINT MANUAL REF:		
		26-21-52		
		FOR OTHER SYS DETAILS SEE:		
		11-32-01-98		
		26-21-52-01		
		26-22-52-01		
		26-23-52-03		
75	NAS514P1032-10	..SCREW	103106	1
80	NAS514P632-5	..SCREW	103106	3
85	BACS12CB06-5	..SCREW	103106	3
90	AN960D416	..WASHER	103106	1
95	MS35338-41	..WASHER	103106	3
100	MS20341-10A	..NUT	103106	1
105	BRH10A3	..NUT	103106	1
		SUPPLIER CODE:		
		V52828		
		SPECIFICATION NUMBER:		
		BACN10JC3		
		OPTIONAL PART:		
		H10-3BAC		
		V15653		
		NS202101-02		
		V80539		
		RMLH9075-3W		
		V72962		
		VN303A02		
		V92215		
		96-02		
		V80539		
		T6S1032J		
		V11815		
110	69B46200-5	..STANDOFF	103106	3
115	233N3250-24	..BRACKET	103106	1
120	233N7506-2	..BASEPLATE ASSY-	103106	1
		SUPPLIER CODE:		
		V89954		

MISSING ITEM NUMBERS NOT APPLICABLE

— ITEM NOT ILLUSTRATED

BOEING PROPRIETARY - Copyright © - Unpublished Work - See title page for details.

FIG ITEM	PART NUMBER	1 2 3 4 5 6 7 NOMENCLATURE	EFFECT FROM TO	UNITS PER ASSY
87				
125	BACS21DD1B	...STUD ASSY SUPPLIER CODE: V08524 SPECIFICATION NUMBER: BACS21DD1B	103106	4
130	233N7506-3	...BASEPLATE- SUPPLIER CODE: V89954	103106	1
135	233N7509-1	.PANEL ASSY-EICAS MAINT SUPPLIER CODE: V89954 ELECTRICAL EQUIP NUMBER: M10372 COMPONENT MAINT MANUAL REF: 31-41-54 FOR OTHER SYS DETAILS SEE: 11-32-01-98 31-41-53-01	103106	1
145	NAS514P632-5	..SCREW	103106	3
150	BACS12HN06-5	..SCREW-	103106	3
160	MS35338-41	..WASHER- OPTIONAL PART: BACW10EC06S	103106	3
160	BACW10EC06S	..WASHER- OPTIONAL PART: MS35338-41	103106	3
175	69B46200-6	..STANDOFF	103106	3
180	233N3250-5	..BRACKET	103106	1
185	233N7509-2	..BASEPLATE ASSY- SUPPLIER CODE: V89954	103106	1
195	BACS21DD1B	...STUD ASSY SUPPLIER CODE: V08524 SPECIFICATION NUMBER: BACS21DD1B	103106	4
200	233N7509-3	...BASEPLATE- SUPPLIER CODE: V89954	103106	1
260	BACP10U0450TC	.PANEL ASSY	103106	1

MISSING ITEM NUMBERS NOT APPLICABLE

– ITEM NOT ILLUSTRATED

BOEING PROPRIETARY - Copyright © - Unpublished Work - See title page for details.

FIG ITEM	PART NUMBER	1 2 3 4 5 6 7 NOMENCLATURE	EFFECT FROM TO	UNITS PER ASSY
87				
265	233N7503-56	.PANEL ASSY-GEN FIELD AND HYDR SUPPLIER CODE: V89954 ELECTRICAL EQUIP NUMBER: M10191 COMPONENT MAINT MANUAL REF: 24-22-73 FOR OTHER SYS DETAILS SEE: 11-32-01-98 24-22-73-02 27-23-51-01	103106	1
270	NAS514P1032-10	..SCREW	103106	1
275	NAS514P1032-5	..SCREW- OPTIONAL PART: FH6C5CPL12BN V12324	103106	3
275	FH6C5CPL12BN	..SCREW- SUPPLIER CODE: V12324 OPTIONAL PART: NAS514P1032-5	103106	3
280	MS51957-27	..SCREW	103106	3
285	NAS1149D0463H	..WASHER	103106	1
290	MS35338-136	..WASHER- OPTIONAL PART: BACW10EC06CD	103106	3
290	BACW10EC06CD	..WASHER- OPTIONAL PART: MS35338-136	103106	3
295	MS35650-305T	..NUT	103106	1
300	BRH10C3D	..NUT SUPPLIER CODE: V52828 SPECIFICATION NUMBER: BACN10JC3CD OPTIONAL PART: T6C1032JCD V11815 NS202486-02 V80539 102LH9075-3W V72962 H51650-3BAC V15653	103106	1
305	69B46200-12	..STANDOFF	103106	3
310	233N3250-42	..BRACKET	103106	1

MISSING ITEM NUMBERS NOT APPLICABLE

– ITEM NOT ILLUSTRATED

BOEING PROPRIETARY - Copyright © - Unpublished Work - See title page for details.

FIG ITEM	PART NUMBER	1 2 3 4 5 6 7 NOMENCLATURE	EFFECT FROM TO	UNITS PER ASSY
87				
315	233N7503-58	..BASEPLATE ASSY- SUPPLIER CODE: V89954 ALTERED FROM PART NUMBER: BACP10U0375T MANUFACTURED FROM: BACP10U0375T	103106	1
320	233N7508-14	.PANEL ASSY-FLIGHT RECORDER/SVCE INTPH SUPPLIER CODE: V89954 ELECTRICAL EQUIP NUMBER: M00033 COMPONENT MAINT MANUAL REF: 31-31-52 FOR OTHER SYS DETAILS SEE: 23-41-52-01 31-31-04-01 11-32-01-98	103106	1
320	233N7508-9	.PANEL ASSY-FLIGHT RECORDER/SVCE INTPH SUPPLIER CODE: V89954 ELECTRICAL EQUIP NUMBER: M00033 COMPONENT MAINT MANUAL REF: 31-31-52 FOR OTHER SYS DETAILS SEE: 11-32-01-98 23-41-52-01 31-31-04-01	103106	1
325	NAS514P1032-10	..SCREW	103106	1
330	NAS514P632-5	..SCREW	103106	3
335	NAS1801-06-5	..SCREW- USED ON: 233N7508-14	103106	3
335	BACS12CB06-5	..SCREW- USED ON: 233N7508-9	103106	3
340	NAS1149D0463H	..WASHER- USED ON: 233N7508-14	103106	1
340	AN960D416	..WASHER- USED ON: 233N7508-9	103106	1
345	BACW10EC06S	..WASHER- USED ON: 233N7508-14	103106	3

MISSING ITEM NUMBERS NOT APPLICABLE

— ITEM NOT ILLUSTRATED

BOEING PROPRIETARY - Copyright © - Unpublished Work - See title page for details.

FIG ITEM	PART NUMBER	1 2 3 4 5 6 7 NOMENCLATURE	EFFECT FROM TO	UNITS PER ASSY
87				
345	MS35338-41	..WASHER-	103106	3
		USED ON:		
		233N7508-9		
350	MS35650-305T	..NUT-	103106	1
		USED ON:		
		233N7508-14		
350	MS20341-10A	..NUT-	103106	1
		USED ON:		
		233N7508-9		
355	BRH10C3D	..NUT-	103106	1
		SUPPLIER CODE:		
		V52828		
		SPECIFICATION NUMBER:		
		BACN10JC3CD		
		OPTIONAL PART:		
		T6C1032JCD		
		V11815		
		NS202486-02		
		V80539		
		102LH9075-3W		
		V72962		
		H51650-3BAC		
		V15653		
		USED ON:		
		233N7508-14		
355	BRH10A3	..NUT-	103106	1
		SUPPLIER CODE:		
		V52828		
		SPECIFICATION NUMBER:		
		BACN10JC3		
		OPTIONAL PART:		
		H10-3BAC		
		V15653		
		NS202101-02		
		V80539		
		RMLH9075-3W		
		V72962		
		VN303A02		
		V92215		
		96-02		
		V80539		
		T6S1032J		
		V11815		
		USED ON:		
		233N7508-9		
360	69B46200-8	..STANDOFF	103106	3
365	233N7508-4	..BRACKET ASSY-	103106	1
		SUPPLIER CODE:		
		V89954		

MISSING ITEM NUMBERS NOT APPLICABLE

– ITEM NOT ILLUSTRATED

BOEING PROPRIETARY - Copyright © - Unpublished Work - See title page for details.

FIG ITEM	PART NUMBER	1 2 3 4 5 6 7 NOMENCLATURE	EFFECT FROM TO	UNITS PER ASSY
87				
370	233N7508-2	..BASEPLATE ASSY- SUPPLIER CODE: V89954	103106	1
375	BACS21DD1B	...STUD ASSY SUPPLIER CODE: V08524 SPECIFICATION NUMBER: BACS21DD1B	103106	2
380	233N7508-3	...BASEPLATE- SUPPLIER CODE: V89954	103106	1
385	233N7500-305	.PANEL ASSY-AIRBORNE DATA LOADER SUPPLIER CODE: V89954 ELECTRICAL EQUIP NUMBER: M01737 COMPONENT MAINT MANUAL REF: 34-61-03 FOR OTHER SYS DETAILS SEE: 34-61-53-03 11-32-01-98	103106	1
- 390	233N7500-13	..PANEL ASSY- SUPPLIER CODE: V89954	103106	RF
395	NAS514P1032-10	...SCREW	103106	1
400	FH6C6CPL12BN	...SCREW- SUPPLIER CODE: V12324	103106	4
405	MS51957-27	...SCREW	103106	4
410	AN960D416	...WASHER	103106	1
415	MS35338-136	...WASHER	103106	4
420	MS35650-305T	...NUT	103106	1
425	MS21042L3	...NUT	103106	1
430	69B46200-19	...STANDOFF	103106	4
435	233T6200-228	...BRACKET	103106	1
440	233N7500-14	...BASEPLATE ASSY- SUPPLIER CODE: V89954	103106	1
445	PFSC35-38ASEMB	....STUD ASSY SUPPLIER CODE: V72794 SPECIFICATION NUMBER: BACS21DX1B	103106	4
450	233N7500-15	....BASEPLATE- SUPPLIER CODE: V89954	103106	1

MISSING ITEM NUMBERS NOT APPLICABLE

- ITEM NOT ILLUSTRATED

BOEING PROPRIETARY - Copyright © - Unpublished Work - See title page for details.

FIG ITEM	PART NUMBER	1 2 3 4 5 6 7 NOMENCLATURE	EFFECT FROM TO	UNITS PER ASSY
87				
455	233N7519-300	.PANEL ASSY-DATA TRANSFER UNIT RCPT SUPPLIER CODE: V89954 ELECTRICAL EQUIP NUMBER: M01736 COMPONENT MAINT MANUAL REF: 34-61-04 FOR BREAKDOWN SEE: 34-61-53-03	103106	1
- 465	233N7519-1	..MODULE ASSY- SUPPLIER CODE: V89954	103106	RF
470	FH6C5CPL12BN	...SCREW- SUPPLIER CODE: V12324	103106	4
475	MS51957-27	...SCREW	103106	4
480	MS35338-136	...WASHER	103106	4
485	233A7204-402	...BRACKET-SPRT SUPPLIER CODE: V89954	103106	1
490	69B46200-19	...STANDOFF	103106	4
495	233N7519-2	...BASEPLATE ASSY- SUPPLIER CODE: V89954	103106	1
500	PFSC35-38ASEMB	....STUD ASSY SUPPLIER CODE: V72794 SPECIFICATION NUMBER: BACS21DX1B	103106	4
505	BACP10U0375N	....PANEL ASSY	103106	1
510	BACP10U0112TC	.PANEL ASSY-	103106	1

MISSING ITEM NUMBERS NOT APPLICABLE

- ITEM NOT ILLUSTRATED

BOEING PROPRIETARY - Copyright © - Unpublished Work - See title page for details.

CABIN ATTENDANTS PANELS

BOEING PROPRIETARY - Copyright © - Unpublished Work - See title page for details.

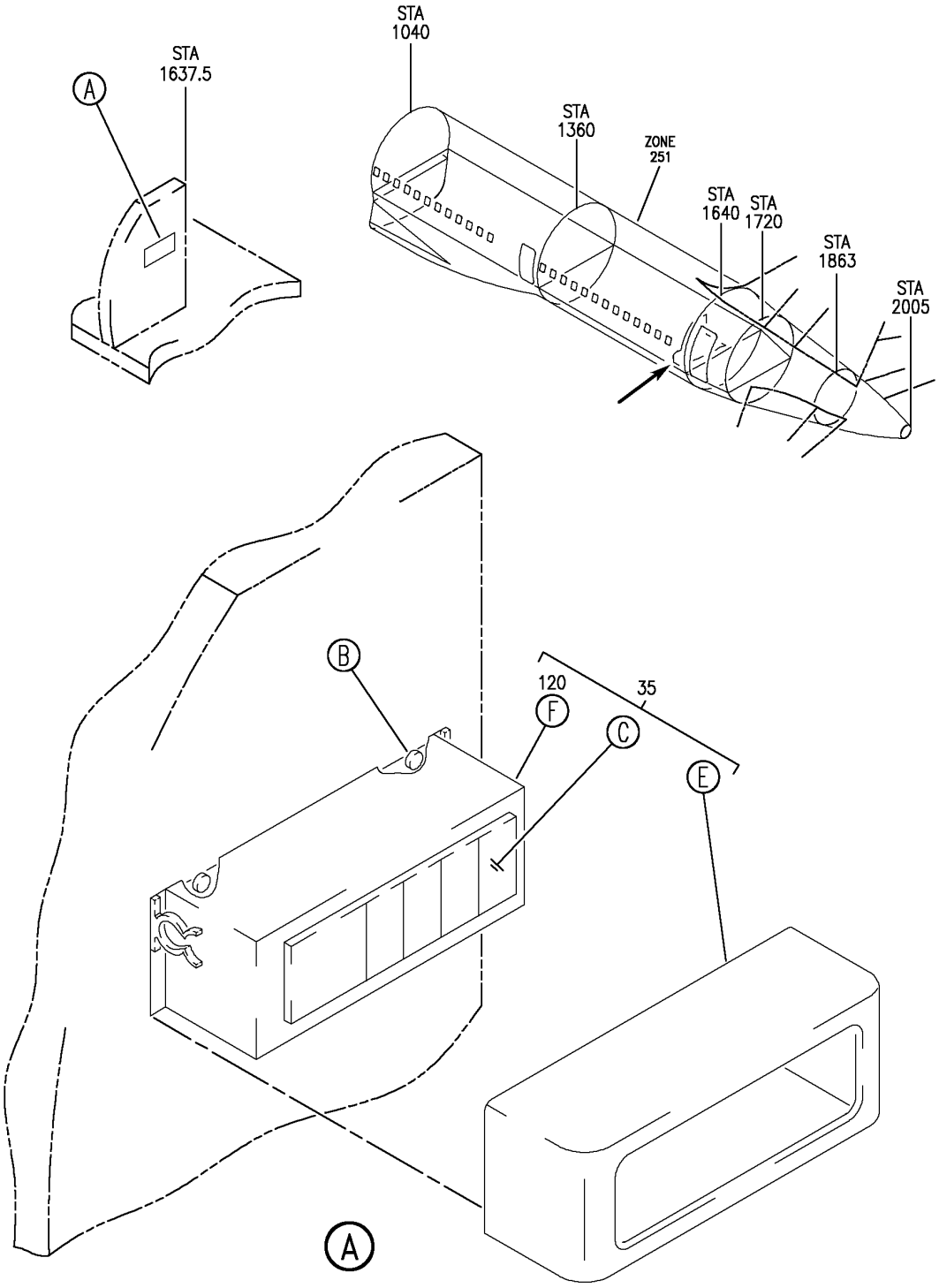

PANEL AND PLACARD INSTL ATTENDANT PARTITION LH AFT (P22)
FIGURE 4 (SHEET 1)

BOEING PROPRIETARY - Copyright © - Unpublished Work - See title page for details.

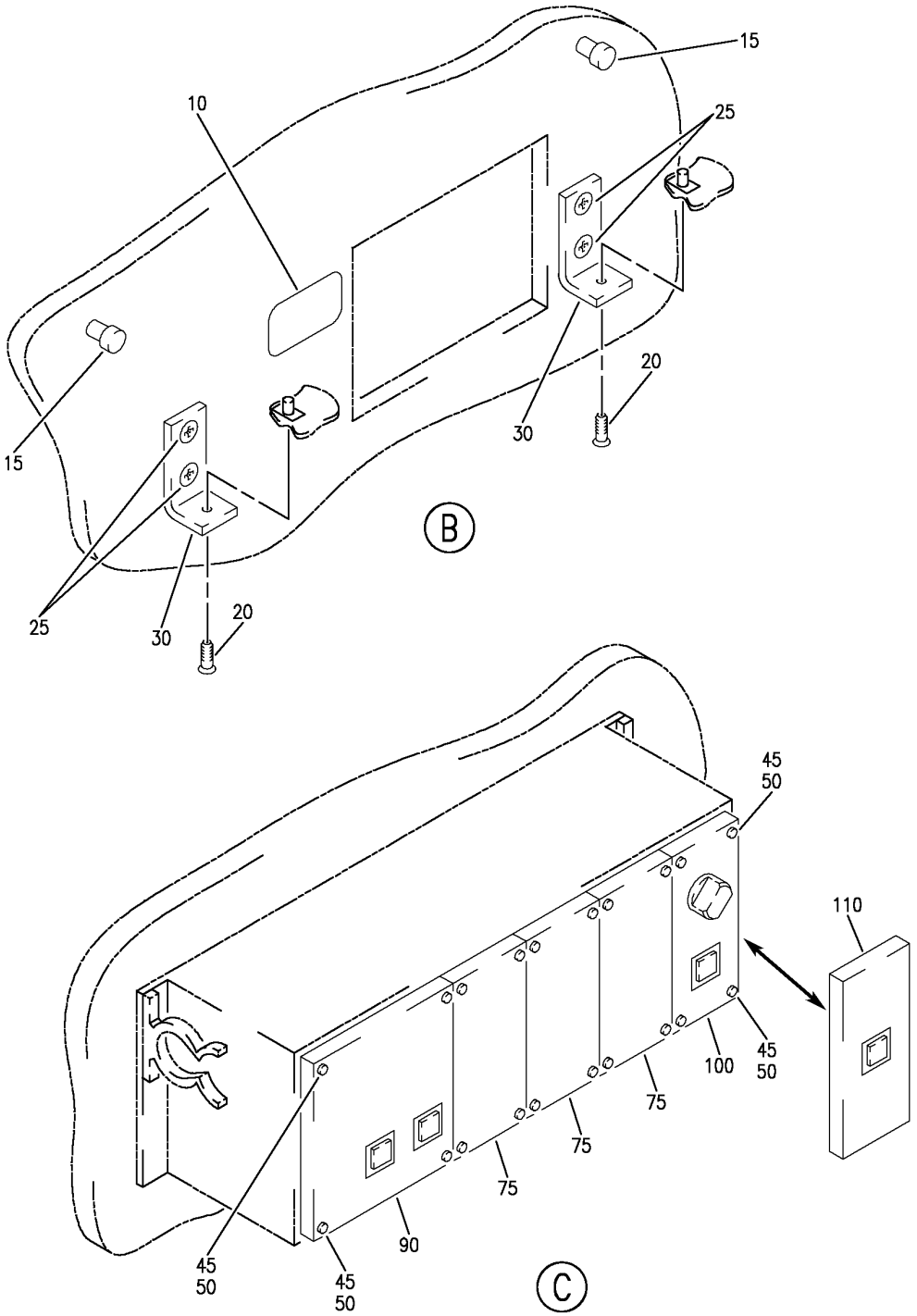

PANEL AND PLACARD INSTL ATTENDANT PARTITION LH AFT (P22)
FIGURE 4 (SHEET 2)

BOEING PROPRIETARY - Copyright © - Unpublished Work - See title page for details.

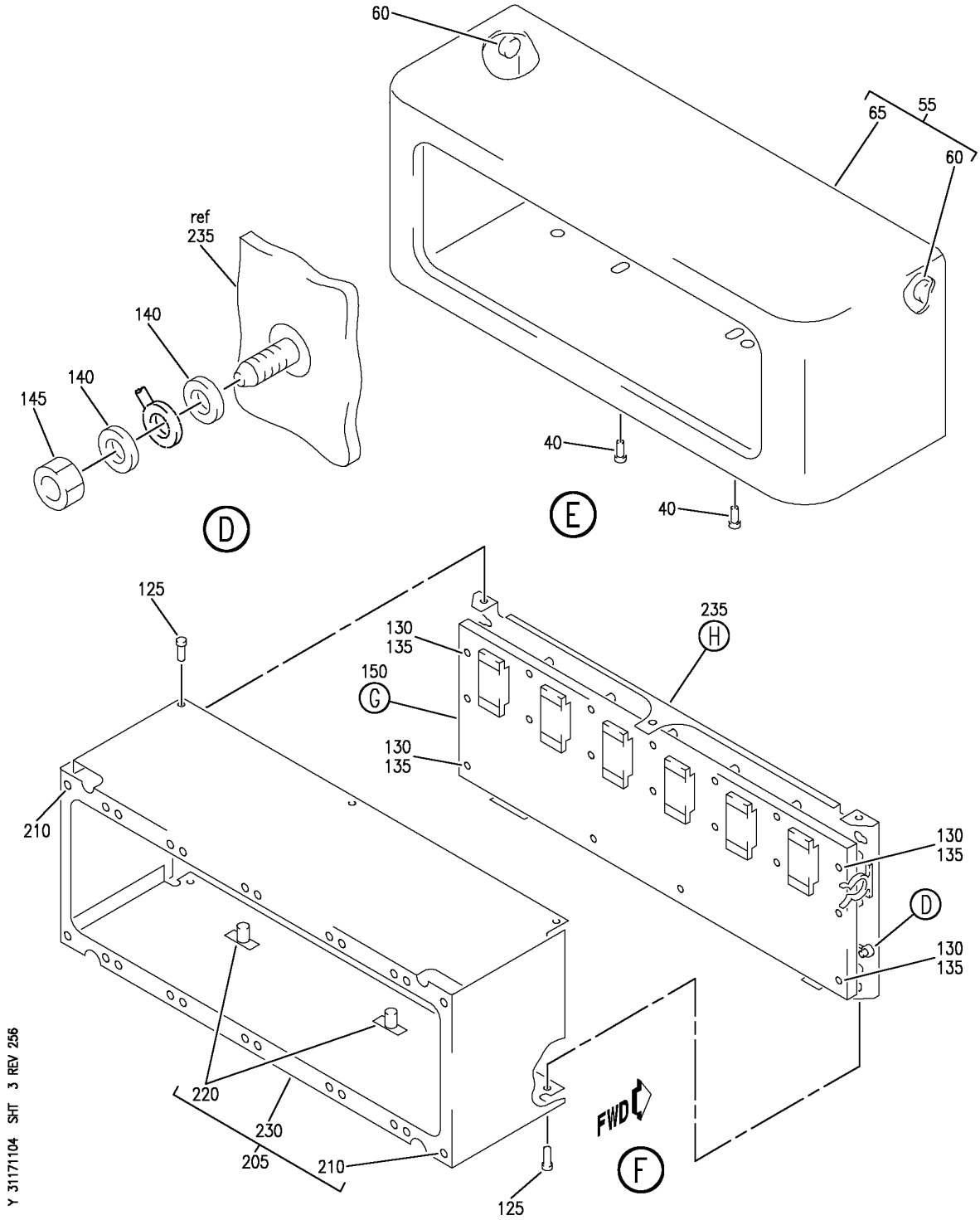

PANEL AND PLACARD INSTL ATTENDANT PARTITION LH AFT (P22)
FIGURE 4 (SHEET 3)

BOEING PROPRIETARY - Copyright © - Unpublished Work - See title page for details.

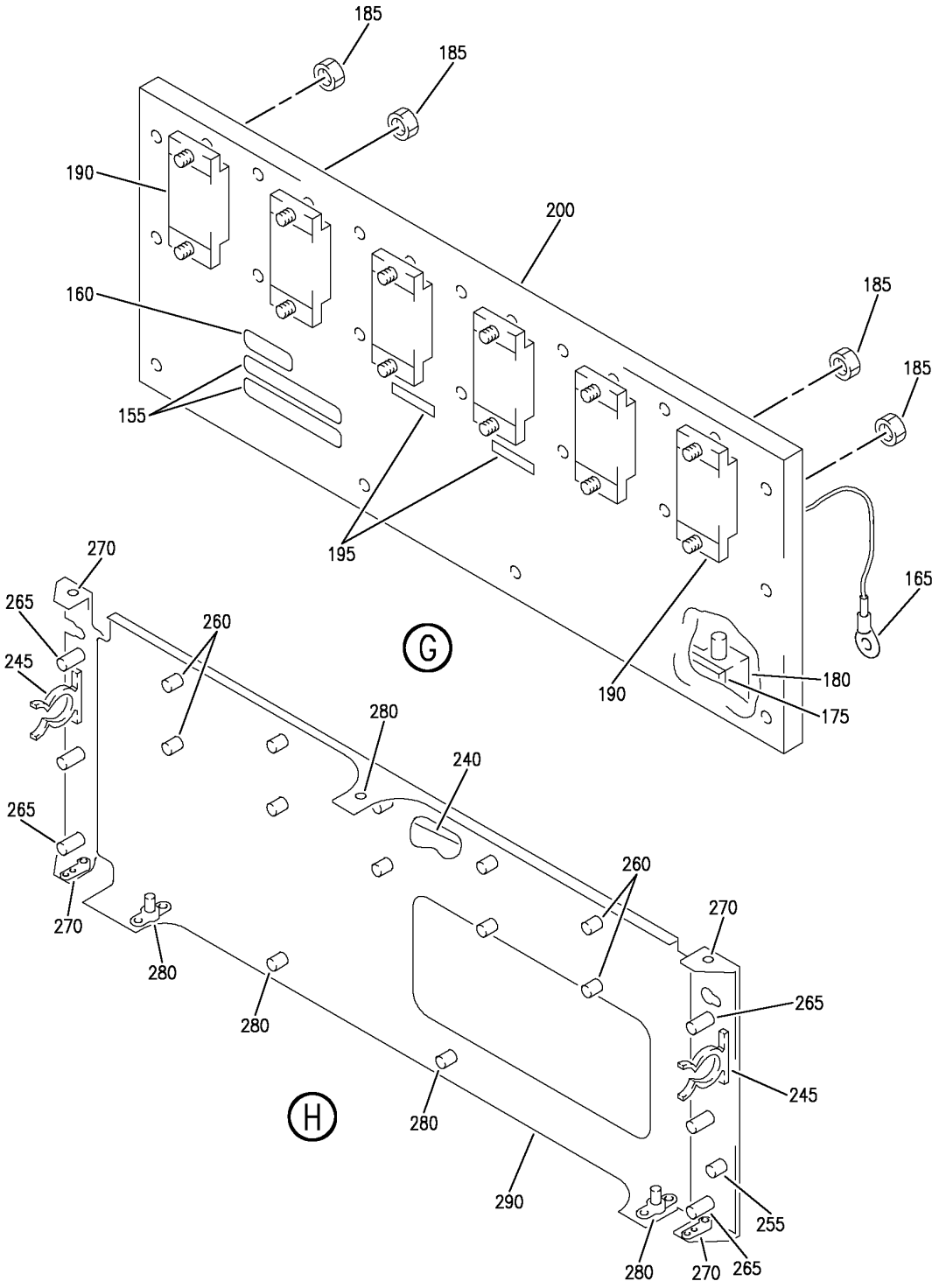

Y 31171104 SHT 4 REV 256

PANEL AND PLACARD INSTL ATTENDANT PARTITION LH AFT (P22)
FIGURE 4 (SHEET 4)

BOEING PROPRIETARY - Copyright © - Unpublished Work - See title page for details.

FIG ITEM	PART NUMBER	1 2 3 4 5 6 7 NOMENCLATURE	EFFECT FROM TO	UNITS PER ASSY
4				
		PANEL AND PLACARD INSTL ATTENDANT PARTITION LH AFT (P22)	103106	
- 5	MODREF33024	PANEL INSTL-PARTITION ATTENDANT (P22) MODULE NUMBER: 417N6301-403B REV A POSITION DATA: STA 1637.50, LBL 32.05, WL 266.63 AFT LH	103106	1
10	BAC27DEL1353	.DECAL- PLACARD CONTENT: P22 ATTENDANT PANEL	103106	1
15	417N6008-2	.BOLT-SHOULDER	103106	2
20	BACS12ER06K6	.SCREW	103106	2
25	BACS12HJ06K5	.SCREW	103106	4
30	417A6102-1	.BRACKET	103106	2
35	417N6351-8B	.PANEL ASSY- SUPPLIER CODE: V89954 ELECTRICAL EQUIP NUMBER: P00021	103106	1
40	BACS12FA3K7	..SCREW	103106	2
45	NAS8201A8	..SCREW	103106	20
50	NAS620C6	..WASHER	103106	20
55	417A6120-5	..SHROUD ASSY	103106	1
60	417A6122-2	...PIN- SUPPLIER CODE: V89954	103106	2
65	417A6122-1	...SHROUD- SUPPLIER CODE: V89954	103106	1
75	285A1700-1	..FACEPLATE ASSY-MOD-C AND MOD-D AND MOD-E SUPPLIER CODE: V89954	103106	3

MISSING ITEM NUMBERS NOT APPLICABLE

– ITEM NOT ILLUSTRATED

BOEING PROPRIETARY - Copyright © - Unpublished Work - See title page for details.

FIG ITEM	PART NUMBER	1 2 3 4 5 6 7 NOMENCLATURE	EFFECT FROM TO	UNITS PER ASSY
4				
90	285N0405-1	..MODULE ASSY-POTABLE WATER/VACCUM WASTE MOD-A, MOD-B SUPPLIER CODE: V89954 ELECTRICAL EQUIP NUMBER: M11345 FUNCTIONAL REFERENCE: PLACARDS AND MARKINGS FOR DETAILS SEE 11-35-13-01A WATER/WASTE FOR DETAILS SEE 38-33-04-01	103106	1
100	285A1710-4	..MODULE ASSY-AFT LIGHTING W/O EMERGENCY EXIT MOD-F SUPPLIER CODE: V89954 ELECTRICAL EQUIP NUMBER: M02107 COMPONENT MAINT MANUAL REF: 33-11-05 FOR DETAILS SEE: 33-22-06-15	103106	1
120	417N6351-100	..PANEL ASSY-(EQUIPMENT/ FURNISHING ONLY) SUPPLIER CODE: V89954 FUNCTIONAL REFERENCE: PLACARDS AND MARKINGS FOR DETAILS SEE 11-35-13-01	103106	1
125	BAC12ER06K6	...SCREW	103106	5
130	NAS8201A8	...SCREW	103106	18
135	NAS620C6	...WASHER	103106	18
140	NAS1149D0316J	...WASHER	103106	2
145	MS21042L3	...NUT	103106	1
150	285N0406-1	...WIRE ASSY-PRINTED BACKPLANE SUPPLIER CODE: V89954	103106	1
155	S906-10207-2	....LABEL-STOCK	103106	2
160	S906-10207-4	....LABEL-STOCK	103106	1

MISSING ITEM NUMBERS NOT APPLICABLE

– ITEM NOT ILLUSTRATED

BOEING PROPRIETARY - Copyright © - Unpublished Work - See title page for details.

FIG ITEM	PART NUMBER	1 2 3 4 5 6 7 NOMENCLATURE	EFFECT FROM TO	UNITS PER ASSY
4				
165	BB839-10	....TERMINAL-LUG SUPPLIER CODE: V98410 SPECIFICATION NUMBER: BACT12AC8 OPTIONAL PART: R1903SN V14726 36160 V00779 51864-2 V00779 BACT12AR163	103106	1
165	51864-7	....TERMINAL-LUG SUPPLIER CODE: V00779 SPECIFICATION NUMBER: BACT12AR163 OPTIONAL PART: BACT12AC8	103106	1
175	285N0406-2	....CONNECTOR-SPACER SUPPLIER CODE: V89954 OPTIONAL PART: 285A1780-3 V89954	103106	1
175	285A1780-3	....CONNECTOR-SPACER SUPPLIER CODE: V89954 OPTIONAL PART: 285N0406-2 V89954	103106	1
180	BCREF12563	....CONNECTOR- SUPPLIER CODE: V50541 OVERLENGTH PART NUMBER: KA140254EPV9MBTH945 SPECIFICATION NUMBER: 900-14112-117 ELECTRICAL EQUIP NUMBER: J00007	103106	1
185	MS21043-06	....NUT-LOCK OPTIONAL PART: BACN10YR06CM	103106	12

MISSING ITEM NUMBERS NOT APPLICABLE

— ITEM NOT ILLUSTRATED

BOEING PROPRIETARY - Copyright © - Unpublished Work - See title page for details.

FIG ITEM	PART NUMBER	1 2 3 4 5 6 7 NOMENCLATURE	EFFECT FROM TO	UNITS PER ASSY
4				
185	PLH506CM	....NUT-LOCK SUPPLIER CODE: V62554 SPECIFICATION NUMBER: BACN10YR06CM OPTIONAL PART: H52732-06CM V15653 MS21043-06	103106	12
190	S906-30234-101	....CONNECTOR- ELECTRICAL EQUIP NUMBER: J00001 J00002 J00003 J00004 J00005 J00006 OPTIONAL PART: SK2836 V28198	103106	6
190	SK2836	....CONNECTOR- SUPPLIER CODE: V28198 SPECIFICATION NUMBER: S906-30234-102 ELECTRICAL EQUIP NUMBER: J00001 J00002 J00003 J00004 J00005 J00006 OPTIONAL PART: S906-30234-101 S906-30234-104	103106	6
190	S906-30234-104	....CONNECTOR- ELECTRICAL EQUIP NUMBER: J00001 J00002 J00003 J00004 J00005 J00006 OPTIONAL PART: SK2836 V28198	103106	6

MISSING ITEM NUMBERS NOT APPLICABLE

— ITEM NOT ILLUSTRATED

BOEING PROPRIETARY - Copyright © - Unpublished Work - See title page for details.

FIG ITEM	PART NUMBER	1 2 3 4 5 6 7 NOMENCLATURE	EFFECT FROM TO	UNITS PER ASSY
4				
195	RXE160	....THERMISTOR-	103106	2
		SUPPLIER CODE:		
		V06090		
		SPECIFICATION NUMBER:		
		S906-10135-1016		
		ELECTRICAL EQUIP NUMBER:		
		RT0001		
		RT0002		
200	906-50112-5	....PWB ASSY-	103106	1
		BACKPLANE		
		SUPPLIER CODE:		
		V89954		
205	417A6130-3	...CHASSIS ASSY-	103106	1
		SUPPLIER CODE:		
		V89954		
210	BACN10JP06BCD	....NUTPLATE	103106	24
		ATTACHING PARTS		
- 215	BACR15BA3D	....RIVET-	103106	48
		SIZE DETERMINED ON INSTL.		
		-------*-------		
220	NS103227H02	....NUTPLATE	103106	2
		SUPPLIER CODE:		
		V80539		
		SPECIFICATION NUMBER:		
		BACN10KA3BS		
		OPTIONAL PART:		
		T8099S1032SK1		
		V11815		
		ATTACHING PARTS		
- 225	BACR15BA3D	....RIVET-	103106	4
		SIZE DETERMINED ON INSTL.		
		-------*-------		
230	417A6130-4	....CHASSIS-	103106	1
		SUPPLIER CODE:		
		V89954		
235	417A6130-1	...CHASSIS ASSY-	103106	1
		BACKPLATE		
		SUPPLIER CODE:		
		V89954		
240	417A6130-5	....SEAL-RUBBER TAPE	103106	AR
		SUPPLIER CODE:		
		V89954		
245	NAS1464-066-02C	....CLIP	103106	2
		ATTACHING PARTS		
- 250	BACR15BA3D	....RIVET-	103106	2
		SIZE DETERMINED ON INSTL.		
		-------*-------		

MISSING ITEM NUMBERS NOT APPLICABLE

- ITEM NOT ILLUSTRATED

BOEING PROPRIETARY - Copyright © - Unpublished Work - See title page for details.

FIG ITEM	PART NUMBER	1 2 3 4 5 6 7 NOMENCLATURE	EFFECT FROM TO	UNITS PER ASSY
4				
255	FHS032-6	....STUD-GND SUPPLIER CODE: V46384	103106	1
260	SOS632-10	....STANDOFFS- SUPPLIER CODE: V46384	103106	12
265	SOS632-16	....STANDOFFS- SUPPLIER CODE: V46384	103106	6
270	BACN10JP06BCD	....NUTPLATE ATTACHING PARTS	103106	4
- 275	BACR15BA3D	....RIVET- SIZE DETERMINED ON INSTL. -------*-------	103106	8
280	NS103227H62	....NUT SUPPLIER CODE: V80539 SPECIFICATION NUMBER: BACN10KA06BS OPTIONAL PART: T8099S632SK1 V11815 ATTACHING PARTS	103106	3
- 285	BACR15BA3D	....RIVET- SIZE DETERMINED ON INSTL. -------*-------	103106	6
290	417A6130-2	....CHASSIS- SUPPLIER CODE: V89954	103106	1
- 350	MODREF33022	PLACARD INSTL-PC POWER INOP MODULE NUMBER: 417N6301-10 REV A	103106	1
- 360	BAC29PPS5955	.DECAL- PLACARD CONTENT: INOP	103106	1

MISSING ITEM NUMBERS NOT APPLICABLE

- ITEM NOT ILLUSTRATED

BOEING PROPRIETARY - Copyright © - Unpublished Work - See title page for details.

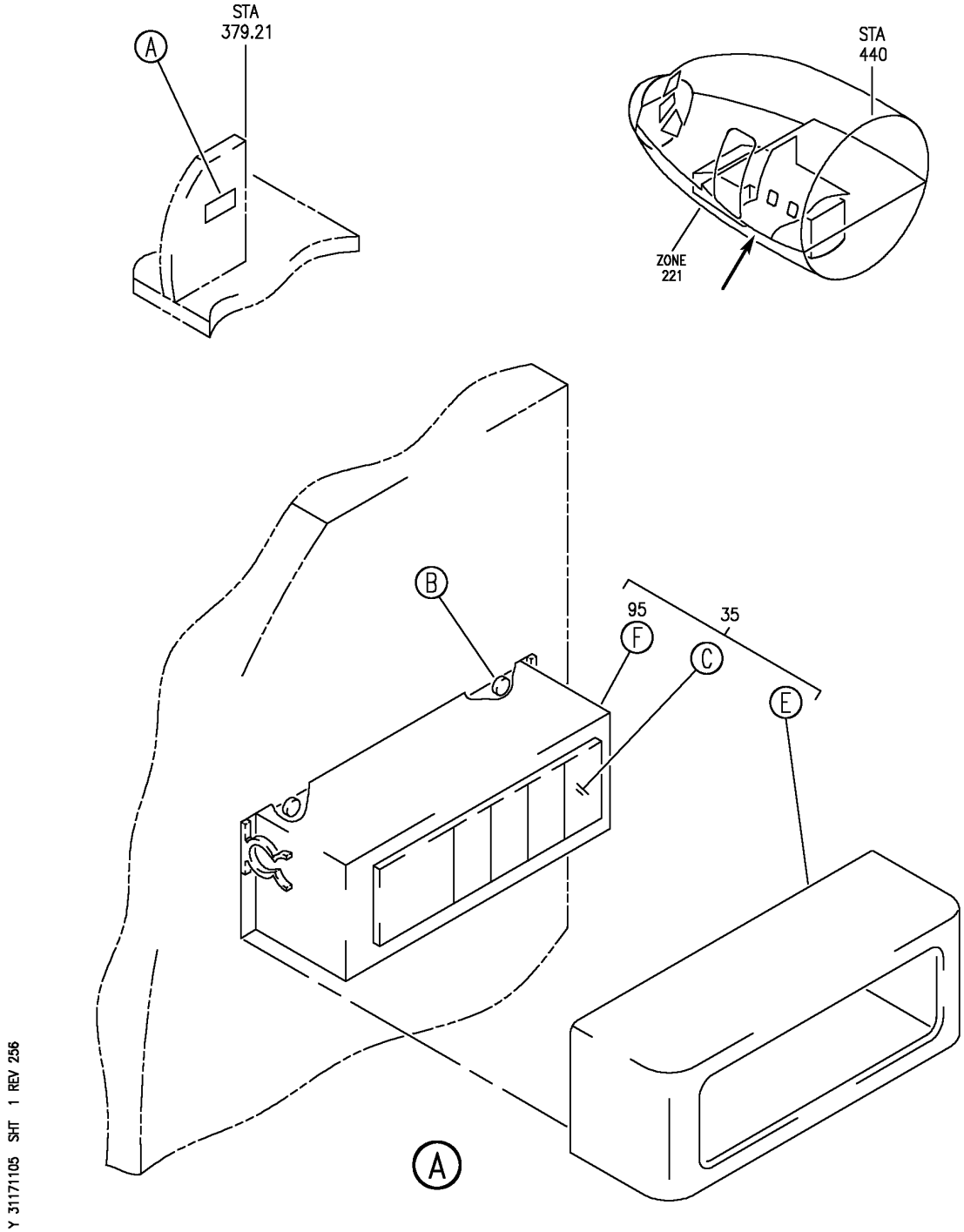

PANEL INSTL-WINDSCREEN ATTENDANT FWD (P21) STA 379.21, LBL 30.31 WL 266.63, LH
FIGURE 5 (SHEET 1)

BOEING PROPRIETARY - Copyright © - Unpublished Work - See title page for details.

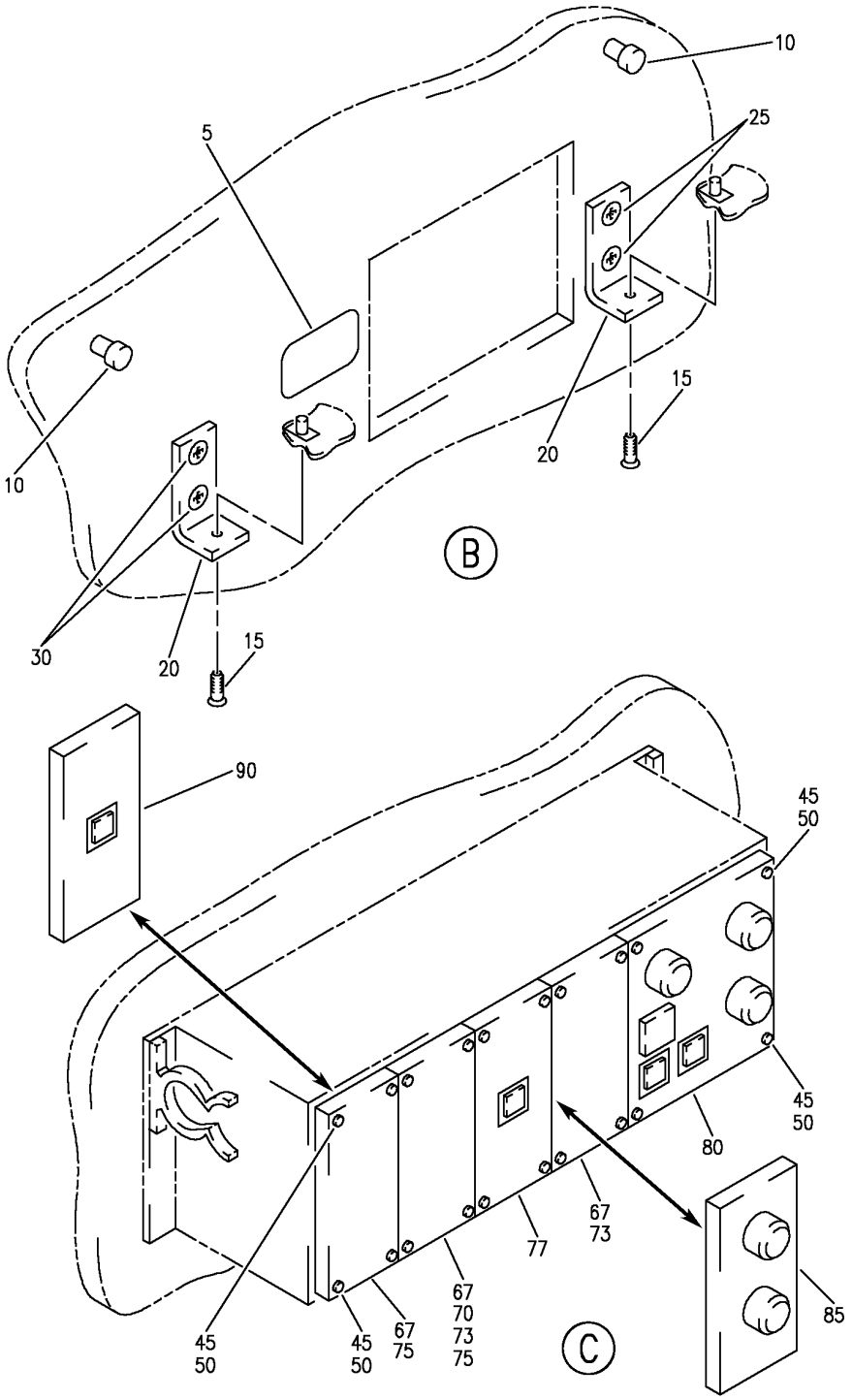

PANEL INSTL-WINDSCREEN ATTENDANT FWD (P21) STA 379.21, LBL 30.31 WL 266.63, LH
FIGURE 5 (SHEET 2)

BOEING PROPRIETARY - Copyright © - Unpublished Work - See title page for details.

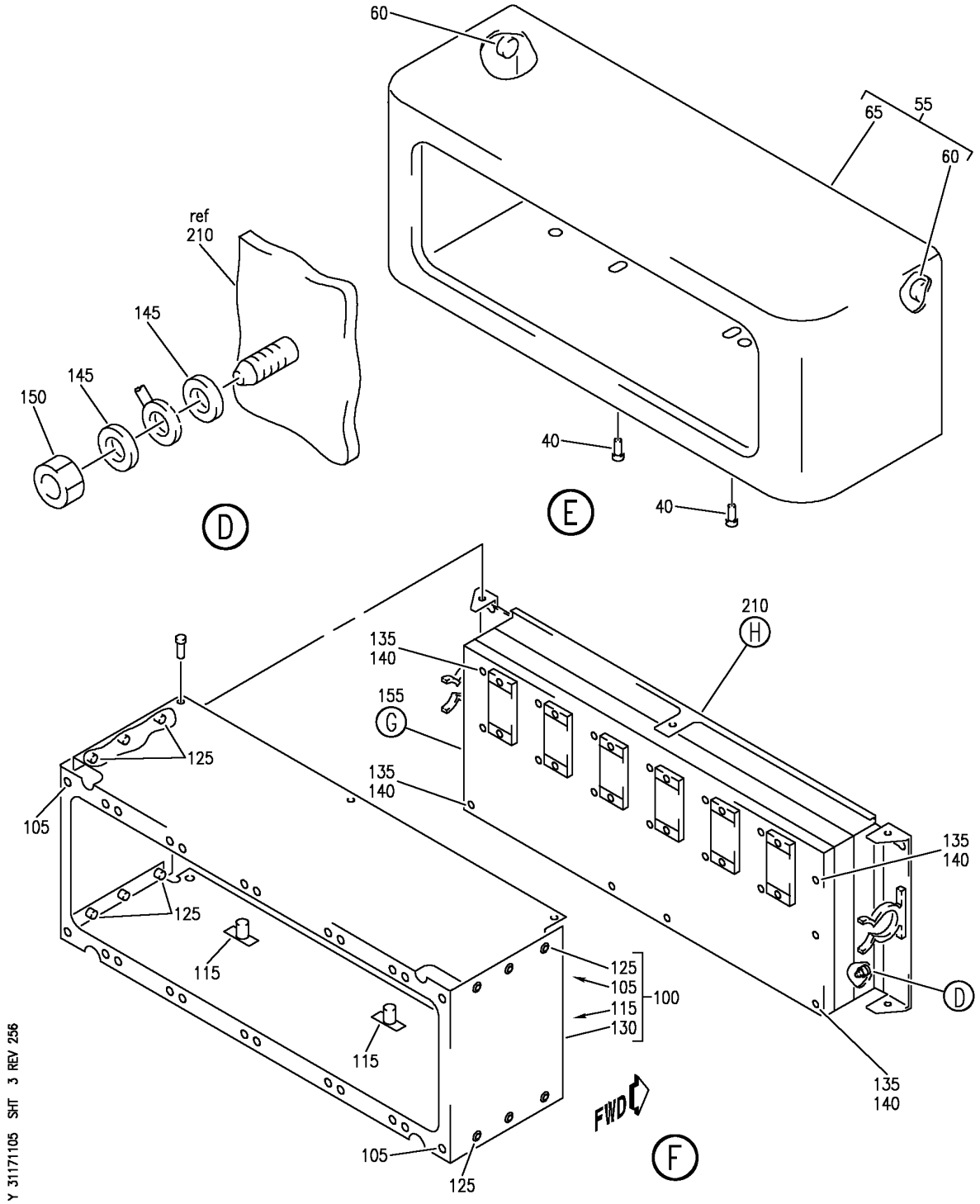

PANEL INSTL-WINDSCREEN ATTENDANT FWD (P21) STA 379.21, LBL 30.31 WL 266.63, LH
FIGURE 5 (SHEET 3)

BOEING PROPRIETARY - Copyright © - Unpublished Work - See title page for details.

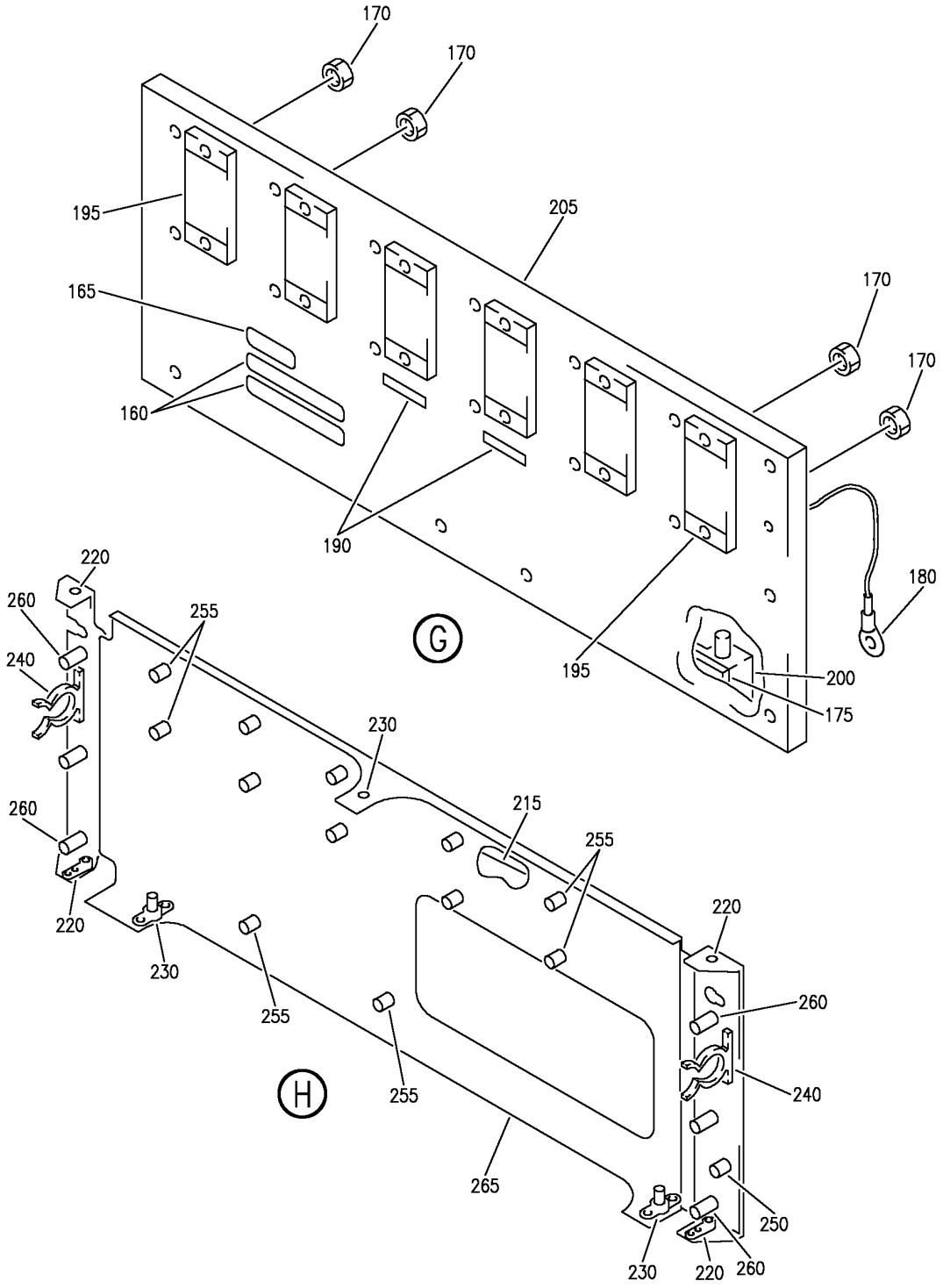

PANEL INSTL-WINDSCREEN ATTENDANT FWD (P21) STA 379.21, LBL 30.31 WL 266.63, LH
FIGURE 5 (SHEET 4)

BOEING PROPRIETARY - Copyright © - Unpublished Work - See title page for details.

FIG ITEM	PART NUMBER	1 2 3 4 5 6 7 NOMENCLATURE	EFFECT FROM TO	UNITS PER ASSY
5				
		PANEL INSTL-WINDSCREEN	103106	
		ATTENDANT FWD (P21)		
		STA 379.21, LBL 30.31		
		WL 266.63, LH		
- 3	MODREF33023	PANEL INSTL-WINDSCREEN	103106	1
		ATTENDANT FWD (P21)		
		MODULE NUMBER:		
		417N6301-106B REV A		
		POSITION DATA:		
		STA 381.00, LBL 30.11,		
		WL 266.63 LH		
5	BAC27DEL1352	.DECAL-	103106	1
		PLACARD CONTENT:		
		P21 ATTENDANT PANEL		
10	417N6008-2	.BOLT-SHOULDER	103106	2
15	BACS12ER06K6	.SCREW	103106	2
20	417A6102-1	.BRACKET-ANGLE	103106	2
		ATTACHING PARTS		
25	BACS12HJ06K5	.SCREW	103106	2
30	BACS12HJ06K5	.SCREW	103106	2
		-------*-------		
35	417N6351-14B	.PANEL ASSY-	103106	1
		SUPPLIER CODE:		
		V89954		
		ELECTRICAL EQUIP NUMBER:		
		P00021		
40	BACS12FA3K7	..SCREW	103106	2
45	NAS8201A8	..SCREW	103106	20
50	NAS620C6	..WASHER	103106	20
55	417A6120-5	..SHROUD ASSY	103106	1
60	417A6122-2	...PIN-	103106	2
		SUPPLIER CODE:		
		V89954		
65	417A6122-1	...SHROUD-	103106	1
		SUPPLIER CODE:		
		V89954		
73	285A1700-1	..FACEPLATE ASSY-	103106	2
		SUPPLIER CODE:		
		V89954		

MISSING ITEM NUMBERS NOT APPLICABLE

- ITEM NOT ILLUSTRATED

BOEING PROPRIETARY - Copyright © - Unpublished Work - See title page for details.

FIG ITEM	PART NUMBER	1 2 3 4 5 6 7 NOMENCLATURE	EFFECT FROM TO	UNITS PER ASSY
5				
77	285A1760-2	..MODULE ASSY-IN FLIGHT ENTERTAINMENT ATTENDANT PNL SUPPLIER CODE: V89954 ELECTRICAL EQUIP NUMBER: M11601 COMPONENT MAINT MANUAL REF: 23-31-03 FOR DETAILS SEE: 23-34-11-05	103106	1
80	285A1710-17	..MODULE ASSY-MDL-FWD LIGHTING W/ EMERGENCY EXIT LIGHT SUPPLIER CODE: V89954 ELECTRICAL EQUIP NUMBER: M11775 COMPONENT MAINT MANUAL REF: 33-11-05 FOR DETAILS SEE: 33-21-52-10 33-22-05-15 33-31-50-05 33-51-50-10	103106	1
90	285N0408-2	..MODULE ASSY-PC POWER OUTLET, MOD-A SUPPLIER CODE: V89954 FOR DETAILS SEE: 24-51-70-05	103106	1
95	417N6351-100	..PANEL ASSY-(EQUIPMENT/ FURNISHING ONLY) SUPPLIER CODE: V89954 FUNCTIONAL REFERENCE: PLACARDS AND MARKINGS FOR DETAILS SEE 11-35-13-01	103106	1
100	417A6130-3	...CHASSIS ASSY- SUPPLIER CODE: V89954 ATTACHING PARTS	103106	1
- 103	BACS12ER06K6	...SCREW -------*-------	103106	5
105	BACN10JP06BCD	....NUTPLATE	103106	24

MISSING ITEM NUMBERS NOT APPLICABLE

- ITEM NOT ILLUSTRATED

BOEING PROPRIETARY - Copyright © - Unpublished Work - See title page for details.

FIG ITEM	PART NUMBER	1 2 3 4 5 6 7 NOMENCLATURE	EFFECT FROM TO	UNITS PER ASSY
5				
		ATTACHING PARTS		
- 110	BACR15BA3D	....RIVET-	103106	48
		SIZE DETERMINED ON INSTL.		
		-------*-------		
115	NS103227H02	....NUTPLATE	103106	2
		SUPPLIER CODE:		
		V80539		
		SPECIFICATION NUMBER:		
		BACN10KA3BS		
		OPTIONAL PART:		
		T8099S1032SK1		
		V11815		
		ATTACHING PARTS		
- 120	BACR15BA3D	....RIVET-	103106	4
		SIZE DETERMINED ON INSTL.		
		-------*-------		
125	BACR15BB3D	....RIVET-	103106	12
		SIZE DETERMINED ON INSTL.		
130	417A6130-4	....CHASSIS-	103106	1
		SUPPLIER CODE:		
		V89954		
135	NAS8201A8	...SCREW	103106	18
140	NAS620C6	...WASHER	103106	18
145	NAS1149D0316J	...WASHER	103106	2
150	MS21042L3	...NUT	103106	1
155	285N0406-1	...WIRE ASSY-PRINTED	103106	1
		BACKPLANE		
		SUPPLIER CODE:		
		V89954		
160	S906-10207-2	....LABEL-STOCK	103106	2
165	S906-10207-4	....LABEL-STOCK	103106	1
170	MS21043-06	....NUT-LOCK	103106	12
		OPTIONAL PART:		
		BACN10YR06CM		
170	PLH506CM	....NUT-LOCK	103106	12
		SUPPLIER CODE:		
		V62554		
		SPECIFICATION NUMBER:		
		BACN10YR06CM		
		OPTIONAL PART:		
		H52732-06CM		
		V15653		
		MS21043-06		
175	285N0406-2	....CONNECTOR-SPACER	103106	1
		SUPPLIER CODE:		
		V89954		
		OPTIONAL PART:		
		285A1780-3		
		V89954		

MISSING ITEM NUMBERS NOT APPLICABLE

- ITEM NOT ILLUSTRATED

BOEING PROPRIETARY - Copyright © - Unpublished Work - See title page for details.

FIG ITEM	PART NUMBER	1 2 3 4 5 6 7 NOMENCLATURE	EFFECT FROM TO	UNITS PER ASSY
5				
175	285A1780-3	....CONNECTOR-SPACER SUPPLIER CODE: V89954 OPTIONAL PART: 285N0406-2 V89954	103106	1
180	BB839-10	....TERMINAL-LUG SUPPLIER CODE: V98410 SPECIFICATION NUMBER: BACT12AC8 OPTIONAL PART: R1903SN V14726 36160 V00779 51864-2 V00779 BACT12AR163	103106	1
180	51864-7	....TERMINAL-LUG SUPPLIER CODE: V00779 SPECIFICATION NUMBER: BACT12AR163 OPTIONAL PART: BACT12AC8	103106	1
190	RXE160	....THERMISTOR- SUPPLIER CODE: V06090 SPECIFICATION NUMBER: S906-10135-1016 ELECTRICAL EQUIP NUMBER: RT0001 RT0002	103106	2
195	SK2836	....CONNECTOR- SUPPLIER CODE: V28198 SPECIFICATION NUMBER: S906-30234-102 ELECTRICAL EQUIP NUMBER: J00001 J00002 J00003 J00004 J00005 J00006 OPTIONAL PART: S906-30234-101 S906-30234-104	103106	6

MISSING ITEM NUMBERS NOT APPLICABLE

– ITEM NOT ILLUSTRATED

BOEING PROPRIETARY - Copyright © - Unpublished Work - See title page for details.

FIG ITEM	PART NUMBER	1 2 3 4 5 6 7 NOMENCLATURE	EFFECT FROM TO	UNITS PER ASSY
5				
195	S906-30234-101	....CONNECTOR-	103106	6
		ELECTRICAL EQUIP NUMBER:		
		J00001		
		J00002		
		J00003		
		J00004		
		J00005		
		J00006		
		OPTIONAL PART:		
		SK2836		
		V28198		
195	S906-30234-104	....CONNECTOR-	103106	6
		ELECTRICAL EQUIP NUMBER:		
		J00001		
		J00002		
		J00003		
		J00004		
		J00005		
		J00006		
		OPTIONAL PART:		
		SK2836		
		V28198		
200	BCREF12563	....CONNECTOR-	103106	1
		SUPPLIER CODE:		
		V50541		
		OVERLENGTH PART NUMBER:		
		KA140254EPV9MBTH945		
		SPECIFICATION NUMBER:		
		900-14112-117		
		ELECTRICAL EQUIP NUMBER:		
		J00007		
205	906-50112-5	....PWB ASSY-	103106	1
		BACKPLANE		
		SUPPLIER CODE:		
		V89954		
210	417A6130-1	...CHASSIS ASSY-	103106	1
		BACKPLATE		
		SUPPLIER CODE:		
		V89954		
215	417A6130-5	....SEAL-RUBBER TAPE	103106	AR
		SUPPLIER CODE:		
		V89954		
220	BACN10JP06BCD	....NUTPLATE	103106	4
		ATTACHING PARTS		
- 225	BACR15BA3D	....RIVET-	103106	8
		SIZE DETERMINED ON INSTL.		
		-------*-------		

MISSING ITEM NUMBERS NOT APPLICABLE

– ITEM NOT ILLUSTRATED

BOEING PROPRIETARY - Copyright © - Unpublished Work - See title page for details.

FIG ITEM	PART NUMBER	1 2 3 4 5 6 7 NOMENCLATURE	EFFECT FROM TO	UNITS PER ASSY
5				
230	NS103227H62	....NUT SUPPLIER CODE: V80539 SPECIFICATION NUMBER: BACN10KA06BS OPTIONAL PART: T8099S632SK1 V11815 ATTACHING PARTS	103106	3
- 235	BACR15BA3D	....RIVET- SIZE DETERMINED ON INSTL. -------*-------	103106	6
240	NAS1464-066-02C	....CLIP ATTACHING PARTS	103106	2
- 245	BACR15BA3D	....RIVET- SIZE DETERMINED ON INSTL. -------*-------	103106	2
250	FHS032-6	....STUD-GND SUPPLIER CODE: V46384	103106	1
255	SOS632-10	....STANDOFFS- SUPPLIER CODE: V46384	103106	12
260	SOS632-16	....STANDOFFS- SUPPLIER CODE: V46384	103106	6
265	417A6130-2	....CHASSIS- SUPPLIER CODE: V89954	103106	1
- 400	MODREF170744	PLACARD INSTL-FWD ATTENDANT PANEL ENTERTAINMENT MOD MODULE NUMBER: 417N6301-11 REV A	105106	1
- 410	BAC27DEX7062	.MARKER- POSITION DATA: INSTALL DECAL OVER "IFE" TO COVER TEXT AS COMPLETELY AS POSSIBLE CENTER DECAL UNDER THE SWITCH PLACARD CONTENT: AUDIO	105106	1

MISSING ITEM NUMBERS NOT APPLICABLE

- ITEM NOT ILLUSTRATED

BOEING PROPRIETARY - Copyright © - Unpublished Work - See title page for details.

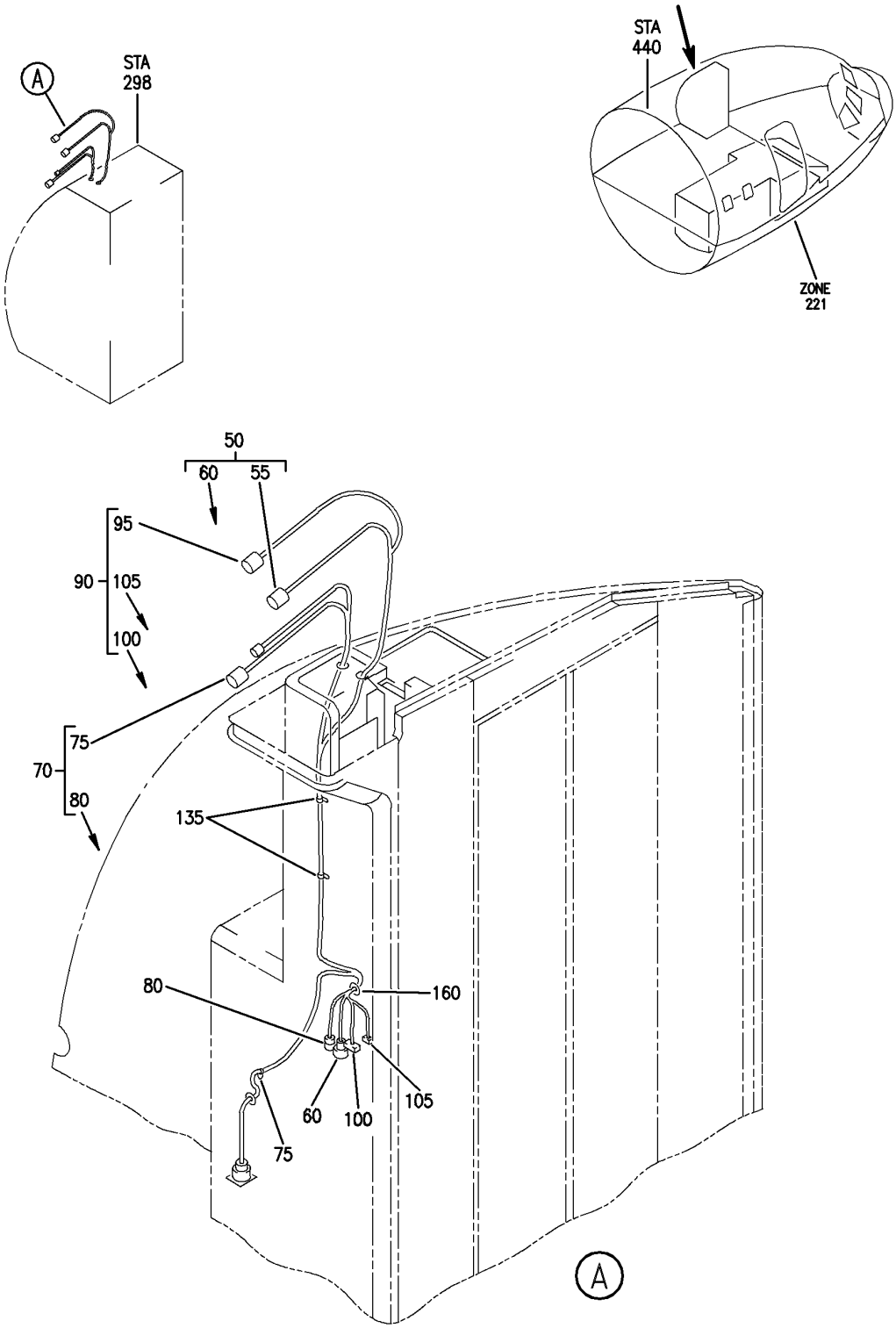

HARNESS INSTL-ATTENDANT PROVISION LAV A (INDICATING/RECORDING SYSTEMS ONLY)
FIGURE 50

BOEING PROPRIETARY - Copyright © - Unpublished Work - See title page for details.

FIG ITEM	PART NUMBER	1 2 3 4 5 6 7 NOMENCLATURE	EFFECT FROM TO	UNITS PER ASSY
50				
		HARNESS INSTL-ATTENDANT PROVISION LAV A (INDICATING/RECORDING SYSTEMS ONLY)	504903	
- 1	D75D99046-111	HARNESS INSTL-ATTENDANT PROVISION LAV A (INDICATING/RECORDING SYSTEMS ONLY)	504903	RF
		SUPPLIER CODE: VS5825		
		FOR NHA/OTHER SYS DET SEE: 25-41-01-12		
50	D75D95053-111	.HARNESS ASSY-ATTENDANT PNL	504903	1
		SUPPLIER CODE: VS5825		
55	BACC45FT20-41S	..CONNECTOR-P6	504903	1
60	BACC45FT20C41P	..CONNECTOR-P9	504903	1
- 65	T18R	..TIE-	504903	9
		SUPPLIER CODE: VU3384		
		OPTIONAL PART: 89176-0001 VS5006		
70	D75D95102-111	.HARNESS ASSY-ATTENDANT PNL	504903	1
		SUPPLIER CODE: VS5825		
75	BACC45FT14-15P	..CONNECTOR-P11	504903	1
80	BACC45FT14-15S	..CONNECTOR-P8	504903	1
- 85	T18R	..TIE-	504903	9
		SUPPLIER CODE: VU3384		
		OPTIONAL PART: 89176-0001 VS5006		
- 115	D75D95082-111	.HARNESS ASSY-AUDIO PNL	504903	1
		SUPPLIER CODE: VS5825		
- 120	BACC45FT16-24P	..CONNECTOR-P12	504903	1
- 125	DAMA15SWS	..CONNECTOR-P14	504903	1
		SUPPLIER CODE: V71468		
- 130	DAMA9S	..CONNECTOR-P13	504903	1
		SUPPLIER CODE: V71468		
135	BACC10DK10	.CLAMP	504903	2
- 145	BACC10DK13	.CLAMP	504903	1
- 155	D75D70550-111	.SUPPORT-CONN.	504903	1
		SUPPLIER CODE: VS5825		

MISSING ITEM NUMBERS NOT APPLICABLE

- ITEM NOT ILLUSTRATED

BOEING PROPRIETARY - Copyright © - Unpublished Work - See title page for details.

FIG ITEM	PART NUMBER	1 2 3 4 5 6 7 NOMENCLATURE	EFFECT FROM TO	UNITS PER ASSY
50				
160	D75D80150-914	.GROMMET-	504903	1
		SUPPLIER CODE:		
		VS5825		
- 165	D75D80150-914	.GROMMET-	504903	1
		SUPPLIER CODE:		
		VS5825		
- 170	NAS1801-3-6	.SCREW	504903	3
- 175	NAS1801-04-6	.SCREW	504903	4
- 180	NAS1801-06-5	.SCREW	504903	2
- 185	AN960KD10L	.WASHER	504903	3
- 190	AN960KD4L	.WASHER	504903	8
- 195	AN960KD6L	.WASHER	504903	2
- 200	NAS679A04	.NUT	504903	4

MISSING ITEM NUMBERS NOT APPLICABLE

- ITEM NOT ILLUSTRATED

BOEING PROPRIETARY - Copyright © - Unpublished Work - See title page for details.

CLOCKS

BOEING PROPRIETARY - Copyright © - Unpublished Work - See title page for details.

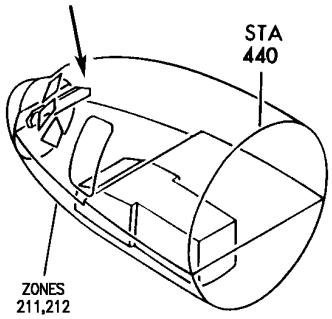

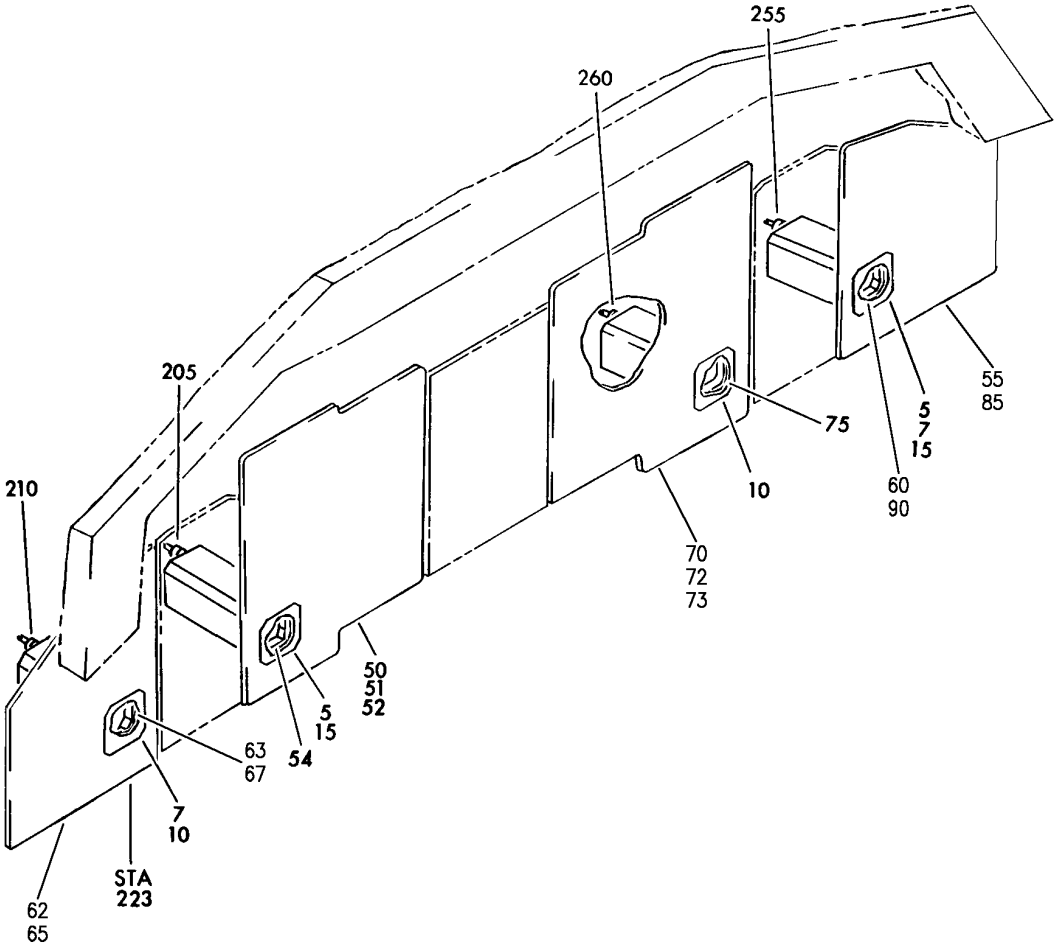

Y 31250101 REV 319

PANEL INSTL-CAPT AND FIRST OFFICER FWD (CLOCKS ONLY)
FIGURE 1

BOEING PROPRIETARY - Copyright © - Unpublished Work - See title page for details.

FIG ITEM	PART NUMBER	1 2 3 4 5 6 7 NOMENCLATURE	EFFECT FROM TO	UNITS PER ASSY
1		PANEL INSTL-CAPT AND FIRST OFFICER FWD (CLOCKS ONLY)	002004 006010 107107 121503 904999	
- 1	233N2101-1	PANEL INSTL-CAPT AND FIRST OFFICER (CLOCKS ONLY) POSITION DATA: FWD VARIABLE DRAWING REF: 233N2101-5003 233N2101-5004 233N2101-5037 233N2101-5039 233N2101-5041 FOR NHA/OTHER SYS DET SEE: 25-10-00-05A	002004 006010 107107 121503 904999	RF
5	65806-002-1	.CLOCK ASSY- SUPPLIER CODE: VF0216 SPECIFICATION NUMBER: S231T120-1 ELECTRICAL EQUIP NUMBER: N00002 N00042 COMPONENT MAINT MANUAL REF: 31-25-01 QUALIFIED I/W DATA: 2610-08-1(60B00303-107) I/W 65806-002-1(S231T120-1) IN SHIPSETS, FOR ALL FMC EXCEPT S242T102-451 WITH S/W PS4052970-95X, WHERE X CAN BE ANY VALUE, AND S242T102-455. FOR DETAILS SEE: 31-25-01-10	002004 107107 952952	2

MISSING ITEM NUMBERS NOT APPLICABLE

- ITEM NOT ILLUSTRATED

BOEING PROPRIETARY - Copyright © - Unpublished Work - See title page for details.

	FIG ITEM	PART NUMBER	1 2 3 4 5 6 7 NOMENCLATURE	EFFECT FROM TO	UNITS PER ASSY
	1				
R	5	2610-08-1	.CLOCK ASSY-	006010	2
R			SUPPLIER CODE:	950951	
R			V52013	953999	
R			FUNCTIONAL DESCRIPTION:		
R			DIGITAL ELECTRONIC		
R			CHRONOMETER, SHOWS		
R			ELAPSED TIME,		
R			CHRONOGRAPH TIME, DATE		
R			AND GREENWICH MEAN TIME.		
R			SPECIFICATION NUMBER:		
R			60B00303-107		
R			ELECTRICAL EQUIP NUMBER:		
R			N00002		
R			N00042		
R			COMPONENT MAINT MANUAL REF:		
R			31-21-08		
R			QUALIFIED I/W DATA:		
R			2600-06-1 I/W 2610-08-1		
R			SUBJECT TO CUSTOMER		
R			PREFERENCE		
R			2610-08-1(60B00303-107)		
R			I/W		
R			65806-002-1(S231T120-1)		
R			IN SHIPSETS, FOR ALL FMC		
R			EXCEPT S242T102-451 WITH		
R			S/W PS4052970-95X, WHERE		
R			X CAN BE ANY VALUE, AND		
R			S242T102-455.		
R			FOR DETAILS SEE:		
R			31-25-01-50		

MISSING ITEM NUMBERS NOT APPLICABLE

– ITEM NOT ILLUSTRATED

BOEING PROPRIETARY - Copyright © - Unpublished Work - See title page for details.

FIG ITEM	PART NUMBER	1 2 3 4 5 6 7 NOMENCLATURE	EFFECT FROM TO	UNITS PER ASSY
1				
10	65806-002-1	.CLOCK ASSY-	121503	2
		SUPPLIER CODE:	904949	
		VF0216		
		SPECIFICATION NUMBER:		
		S231T120-1		
		ELECTRICAL EQUIP NUMBER:		
		N00002		
		N00042		
		COMPONENT MAINT MANUAL REF:		
		31-25-01		
		QUALIFIED I/W DATA:		
		2610-08-1(60B00303-107)		
		I/W		
		65806-002-1(S231T120-1)		
		IN SHIPSETS, FOR ALL FMC		
		EXCEPT S242T102-451 WITH		
		S/W PS4052970-95X, WHERE		
		X CAN BE ANY VALUE, AND		
		S242T102-455.		
		FOR DETAILS SEE:		
		31-25-01-10		
51	233N2221-59	.MODULE ASSY-P1-3	107107	RF
51	233N2221-51	.MODULE ASSY-P1-3	002004	RF
			006010	
			950999	
54	123-3D	..CLAMP-	002004	1
		SUPPLIER CODE:	006010	
		V33463	107107	
			950999	
55	233N2223-8	.MODULE ASSY-P3-3	107107	RF
		PRE SERVICE BULLETIN:		
		34-0414		
55	233N2223-12	.MODULE ASSY-P3-3	002004	RF
		PRE SERVICE BULLETIN:	006010	
		34-0416	950999	
60	123-3D	..CLAMP-	002004	1
		SUPPLIER CODE:	006010	
		V33463	107107	
			950999	
- 61	823N0001-3	.MODULE ASSY-P1-1	009009	RF
		POST SERVICE BULLETIN:	107107	
		34-0414		
		34-0416		
62	823N0001-203	..PANEL ASSY-P1-1	009009	RF
		POST SERVICE BULLETIN:	107107	
		34-0414		
		34-0416		

MISSING ITEM NUMBERS NOT APPLICABLE

- ITEM NOT ILLUSTRATED

BOEING PROPRIETARY - Copyright © - Unpublished Work - See title page for details.

FIG ITEM	PART NUMBER	1 2 3 4 5 6 7 NOMENCLATURE	EFFECT FROM TO	UNITS PER ASSY
1				
63	123-3D	...CLAMP- SUPPLIER CODE: V33463	009009 107107	1
65	233N2220-13	.MODULE ASSY-P1-1	121503 904949	RF
67	123-3D	..CLAMP- SUPPLIER CODE: V33463	121503 904949	1
70	233N2222-85	.MODULE ASSY-P3-1 PRE ALERT SB: 33A0044R1	121503 904949	RF
70	233N2222-1085	.MODULE ASSY-P3-1 POST ALERT SB: 33A0044R1	121503 904949	RF
75	123-3D	..CLAMP- SUPPLIER CODE: V33463	121503 904949	1
- 80	233N2223-334	.MODULE ASSY-P3-3 POST SERVICE BULLETIN: 34-0414 34-0416	009009 107107	RF
85	233N2223-61	..MODULE SUB ASSY-P3-3 POST SERVICE BULLETIN: 34-0414 34-0416	009009 107107	1
90	123-3D	...CLAMP- SUPPLIER CODE: V33463	009009 107107	1
- 200	286N0001-002	WIRE BUNDLE ASSY- REWORKED BY ALERT SB: 34A0222	121503 904949	RF
- 200	286N0001-003	WIRE BUNDLE ASSY- REWORKED BY ALERT SB: 34A0222	107107	RF
- 200	286N0001-005	WIRE BUNDLE ASSY- REWORKED BY ALERT SB: 34A0222	002004 006010 950999	RF
205	BACC45FT16A24S	.CONNECTOR- ELECTRICAL EQUIP NUMBER: D00463 WIRING DIAGRAM REF: 312511	002004 006010 107107 904999	1
- 250	286N0003-002	WIRE BUNDLE ASSY- REWORKED BY ALERT SB: 34A0222	121503 904949	RF
- 250	286N0003-003	WIRE BUNDLE ASSY- REWORKED BY ALERT SB: 34A0222	107107	RF

MISSING ITEM NUMBERS NOT APPLICABLE

- ITEM NOT ILLUSTRATED

BOEING PROPRIETARY - Copyright © - Unpublished Work - See title page for details.

FIG ITEM	PART NUMBER	1 2 3 4 5 6 7 NOMENCLATURE	EFFECT FROM TO	UNITS PER ASSY
1				
- 250	286N0003-005	WIRE BUNDLE ASSY- REWORKED BY SB: 34-0200 REWORKED BY ALERT SB: 34A0222	002004 006010 950999	RF
255	BACC45FT16A24S	.CONNECTOR- ELECTRICAL EQUIP NUMBER: D00465 WIRING DIAGRAM REF: 312511	002004 006010 107107 950999	1
260	BACC45FT16A24S	.CONNECTOR- ELECTRICAL EQUIP NUMBER: D00465 WIRING DIAGRAM REF: 312511	121503 904949	1

MISSING ITEM NUMBERS NOT APPLICABLE

- ITEM NOT ILLUSTRATED

BOEING PROPRIETARY - Copyright © - Unpublished Work - See title page for details.

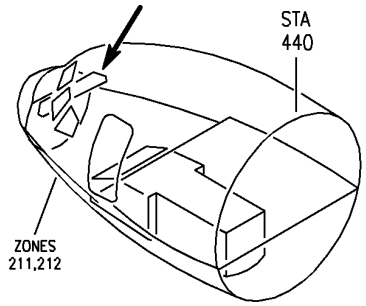

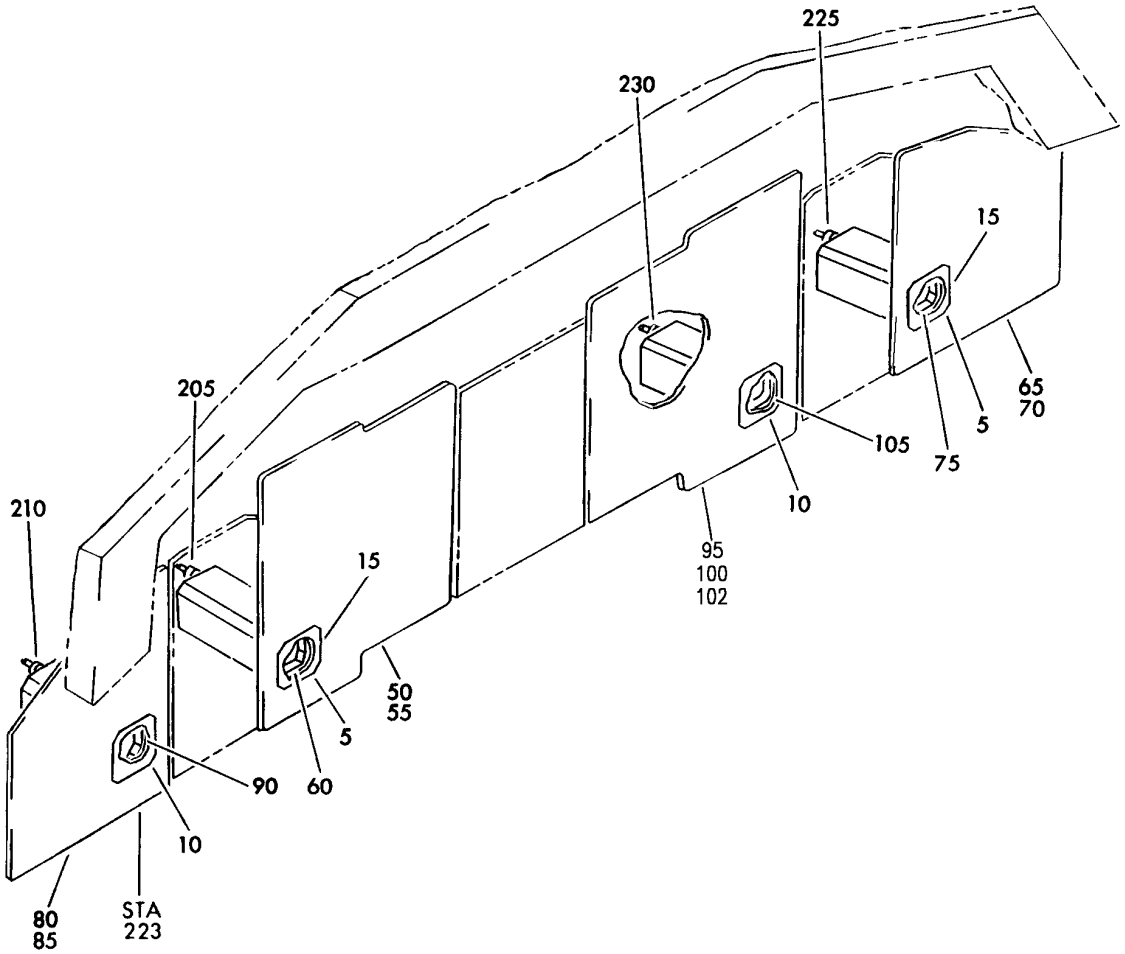

Y 31250102 REV 256

PANEL INSTL-CAPT AND FIRST OFFICER FWD (CLOCKS ONLY)
FIGURE 2

BOEING PROPRIETARY - Copyright © - Unpublished Work - See title page for details.

	FIG ITEM	PART NUMBER	1 2 3 4 5 6 7 NOMENCLATURE	EFFECT FROM TO	UNITS PER ASSY
	2				
			PANEL INSTL-CAPT AND FIRST OFFICER FWD (CLOCKS ONLY)	011100	
-	1	233N2101-1	PANEL INSTL-CAPT AND FIRST OFFICER (CLOCKS ONLY) POSITION DATA: FWD VARIABLE DRAWING REF: 233N2101-5039 FOR NHA/OTHER SYS DET SEE: 25-10-00-05A	011100	RF
R	5	2610-08-1	.CLOCK ASSY- SUPPLIER CODE: V52013 FUNCTIONAL DESCRIPTION: DIGITAL ELECTRONIC CHRONOMETER, SHOWS ELAPSED TIME, CHRONOGRAPH TIME, DATE AND GREENWICH MEAN TIME. SPECIFICATION NUMBER: 60B00303-107 ELECTRICAL EQUIP NUMBER: N00002 N00042 COMPONENT MAINT MANUAL REF: 31-21-08 QUALIFIED I/W DATA: 2600-06-1 I/W 2610-08-1 SUBJECT TO CUSTOMER PREFERENCE 2610-08-1(60B00303-107) I/W 65806-002-1(S231T120-1) IN SHIPSETS, FOR ALL FMC EXCEPT S242T102-451 WITH S/W PS4052970-95X, WHERE X CAN BE ANY VALUE, AND S242T102-455. FOR DETAILS SEE: 31-25-01-50	011100	2
	50	233N2221-301	.MODULE ASSY-P1-3 COMPONENT MAINT MANUAL REF: 31-11-48	011100	RF
R	55	233N2221-51	..MODULE ASSY	011100	RF
	60	123-3D	...CLAMP- SUPPLIER CODE: V33463	011100	1

MISSING ITEM NUMBERS NOT APPLICABLE

– ITEM NOT ILLUSTRATED

BOEING PROPRIETARY - Copyright © - Unpublished Work - See title page for details.

FIG ITEM	PART NUMBER	1 2 3 4 5 6 7 NOMENCLATURE	EFFECT FROM TO	UNITS PER ASSY
2				
65	233N2223-301	.MODULE ASSY-P3-3 COMPONENT MAINT MANUAL REF: 31-11-50	011100	RF
70	233N2223-12	..MODULE ASSY-	011100	RF
75	123-3D	...CLAMP- SUPPLIER CODE: V33463	011100	1
- 200	286N0001-005	WIRE BUNDLE ASSY- REWORKED BY ALERT SB: 34A0222	011100	RF
205	BACC45FT16A24S	.CONNECTOR- ELECTRICAL EQUIP NUMBER: D00463 WIRING DIAGRAM REF: 312511	011100	1
- 220	286N0003-005	WIRE BUNDLE ASSY- REWORKED BY ALERT SB: 34A0222	011100	RF
225	BACC45FT16A24S	.CONNECTOR- ELECTRICAL EQUIP NUMBER: D00465 WIRING DIAGRAM REF: 312511	011100	1

MISSING ITEM NUMBERS NOT APPLICABLE

- ITEM NOT ILLUSTRATED

BOEING PROPRIETARY - Copyright © - Unpublished Work - See title page for details.

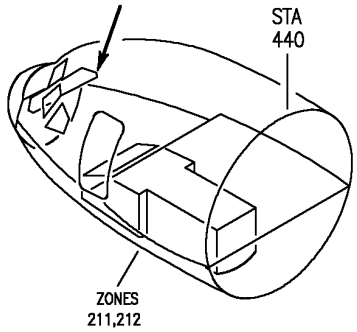

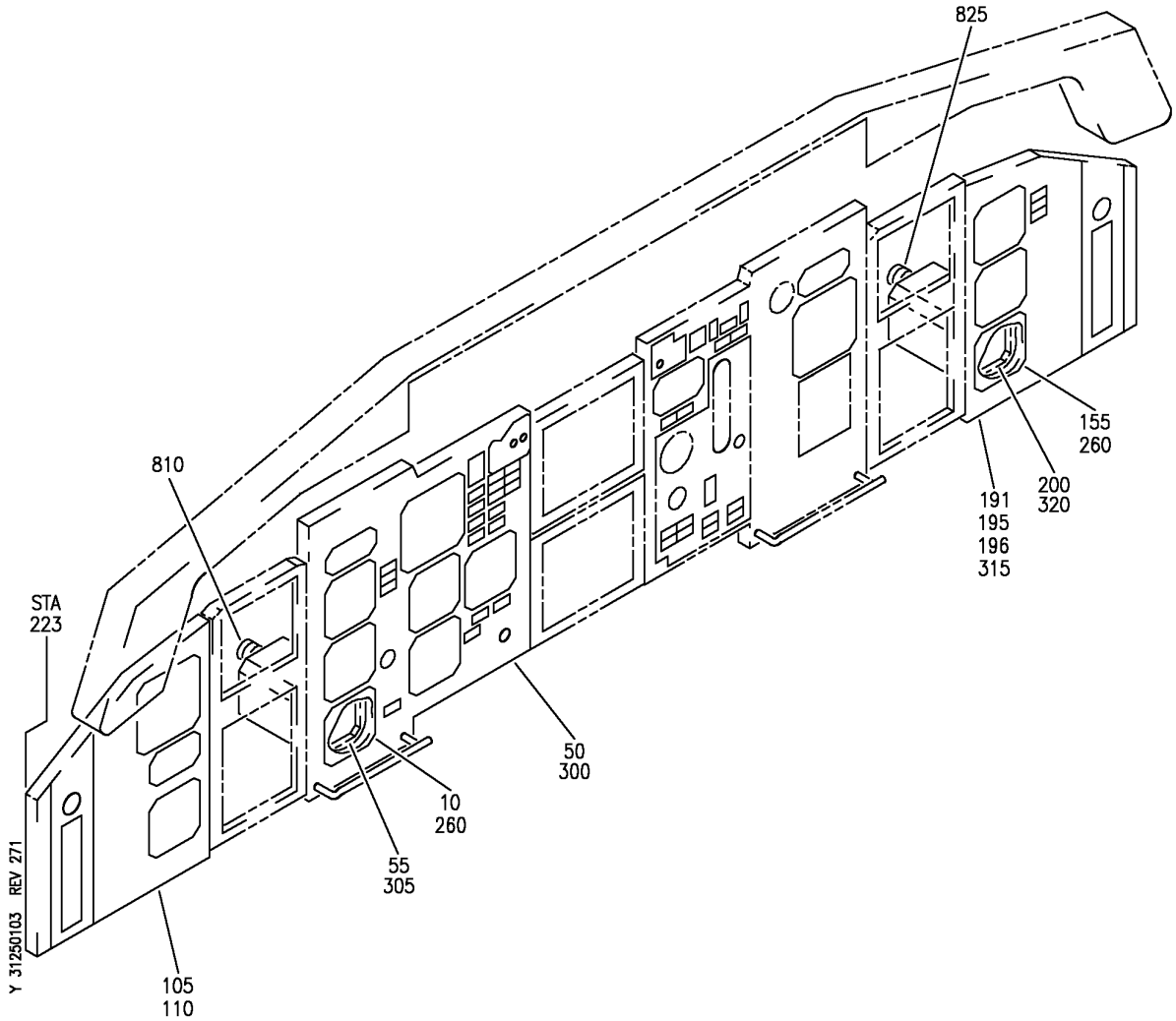

PANEL INSTL-P1-3 AND P3-3 (CLOCKS ONLY)
FIGURE 3

BOEING PROPRIETARY - Copyright © - Unpublished Work - See title page for details.

	FIG ITEM	PART NUMBER	1 2 3 4 5 6 7 NOMENCLATURE	EFFECT FROM TO	UNITS PER ASSY
	3				
			PANEL INSTL-P1-3 AND P3-3	101106	
			(CLOCKS ONLY)	108120	
	- 1	233N2103-10	PANEL INSTL-P1-3	108120	RF
			(CLOCKS ONLY)		
			FOR NHA/OTHER SYS DET SEE:		
			25-10-00-15B		
	- 1	233N2103-72	PANEL INSTL-P1-3	101102	RF
			(CLOCKS ONLY)		
			FOR NHA/OTHER SYS DET SEE:		
			25-10-00-15B		
R	10	2610-08-1	.CLOCK ASSY-	101102	1
R			SUPPLIER CODE:	108120	
R			V52013		
R			FUNCTIONAL DESCRIPTION:		
R			DIGITAL ELECTRONIC		
R			CHRONOMETER, SHOWS		
R			ELAPSED TIME,		
R			CHRONOGRAPH TIME, DATE		
R			AND GREENWICH MEAN TIME.		
R			SPECIFICATION NUMBER:		
R			60B00303-107		
R			ELECTRICAL EQUIP NUMBER:		
R			N00002		
R			COMPONENT MAINT MANUAL REF:		
R			31-21-08		
R			QUALIFIED I/W DATA:		
R			2610-08-1(60B00303-107)		
R			I/W		
R			65806-002-1(S231T120-1)		
R			IN SHIPSETS, FOR ALL FMC		
R			EXCEPT S242T102-451 WITH		
R			S/W PS4052970-95X, WHERE		
R			X CAN BE ANY VALUE, AND		
R			S242T102-455.		
R			65807-050-1 AND		
R			2610-08-1 ARE		
R			INTERCHANGEABLE AS A		
R			SET ONLY		
R			FOR DETAILS SEE:		
R			31-25-01-50		
	- 45	233N2221-301	.MODULE ASSY-	101102	RF
			COMPONENT MAINT MANUAL REF:	108120	
			31-11-48		
	- 45	233N2221-326	.MODULE ASSY-	101102	RF
			COMPONENT MAINT MANUAL REF:	108120	
			31-11-48		
	- 45	233N2221-320	.MODULE ASSY-	101102	RF
			COMPONENT MAINT MANUAL REF:	108120	
			31-11-48		

MISSING ITEM NUMBERS NOT APPLICABLE

- ITEM NOT ILLUSTRATED

BOEING PROPRIETARY - Copyright © - Unpublished Work - See title page for details.

	FIG ITEM	PART NUMBER	1 2 3 4 5 6 7 NOMENCLATURE	EFFECT FROM TO	UNITS PER ASSY
	3				
	- 45	233N2221-328	.MODULE ASSY- COMPONENT MAINT MANUAL REF: 31-11-48	101102 108120	RF
	50	233N2221-51	..MODULE ASSY- USED ON: 233N2221-301	101102 108120	RF
	50	233N2221-81	..MODULE ASSY- USED ON: 233N2221-320 233N2221-326 233N2221-328	101102 108120	RF
	55	123-3D	...CLAMP- SUPPLIER CODE: V33463	101102 108120	1
	- 150	233N2103-28	PANEL INSTL-P3-3 (CLOCKS ONLY) FOR NHA/OTHER SYS DET SEE: 25-10-00-15B	108120	RF
	- 150	233N2103-73	PANEL INSTL-P3-3 (CLOCKS ONLY) FOR NHA/OTHER SYS DET SEE: 25-10-00-15B	101102	RF
R	155	2610-08-1	.CLOCK ASSY- SUPPLIER CODE: V52013 FUNCTIONAL DESCRIPTION: DIGITAL ELECTRONIC CHRONOMETER, SHOWS ELAPSED TIME, CHRONOGRAPH TIME, DATE AND GREENWICH MEAN TIME. SPECIFICATION NUMBER: 60B00303-107 ELECTRICAL EQUIP NUMBER: N00042 COMPONENT MAINT MANUAL REF: 31-21-08 QUALIFIED I/W DATA: 2610-08-1(60B00303-107) I/W 65806-002-1(S231T120-1) IN SHIPSETS, FOR ALL FMC EXCEPT S242T102-451 WITH S/W PS4052970-95X, WHERE X CAN BE ANY VALUE, AND S242T102-455. FOR DETAILS SEE: 31-25-01-50	101102 108120	1

MISSING ITEM NUMBERS NOT APPLICABLE

- ITEM NOT ILLUSTRATED

BOEING PROPRIETARY - Copyright © - Unpublished Work - See title page for details.

FIG ITEM	PART NUMBER	1 2 3 4 5 6 7 NOMENCLATURE	EFFECT FROM TO	UNITS PER ASSY
3				
- 190	233N2223-306	.MODULE ASSY-	108120	RF
		COMPONENT MAINT MANUAL REF:		
		31-11-50		
		QUALIFIED I/W DATA:		
		233N2223-338 CAN REPLACE		
		233N2223-306 FOR		
		NT383-NT399 AIRCRAFT		
		ONLY.		
195	233N2223-22	..MODULE ASSY-	108120	1
200	123-3D	...CLAMP-	101102	1
		SUPPLIER CODE:	108120	
		V33463		

MISSING ITEM NUMBERS NOT APPLICABLE

– ITEM NOT ILLUSTRATED

BOEING PROPRIETARY - Copyright © - Unpublished Work - See title page for details.

FIG ITEM	PART NUMBER	1 2 3 4 5 6 7 NOMENCLATURE	EFFECT FROM TO	UNITS PER ASSY
3				
- 252	MODREF31741	PANEL INSTL-P1-3 AND P3-3 (CLOCKS ONLY) MODULE NUMBER: 233N2103-425 REV A FOR OTHER SYS DETAILS SEE: 11-31-01-38 22-11-02-03 22-14-01-03 22-31-02-01 22-34-51-02 26-17-51-05 27-51-57-03 27-58-00-02 27-81-00-01 29-21-55-02 31-11-11-19 31-11-16-01 31-11-26-38 31-41-52-02 31-51-52-02 32-35-52-03 32-41-52-02 32-42-55-03 32-46-00-01 32-61-51-03 33-13-57-01A 33-16-52-03 34-12-01-03 34-13-01-03 34-13-02-01 34-13-05-01 34-13-06-01 34-16-51-03 34-21-02-02 34-22-02-02 34-22-05-01A 34-22-06-01 34-24-01-03 34-32-00-02 34-46-51-02 34-51-02-02 34-57-00-01 34-61-01-07 34-61-02-02 77-41-01-01 79-33-51-05	103105	1

MISSING ITEM NUMBERS NOT APPLICABLE

– ITEM NOT ILLUSTRATED

BOEING PROPRIETARY - Copyright © - Unpublished Work - See title page for details.

FIG ITEM	PART NUMBER	1 2 3 4 5 6 7 NOMENCLATURE	EFFECT FROM TO	UNITS PER ASSY
3				
- 252	MODREF104335	PANEL INSTL-P1-3 AND P3-3 (CLOCKS ONLY) MODULE NUMBER: 233N2103-425 REV B FOR OTHER SYS DETAILS SEE: 11-31-01-38 22-11-02-03 22-14-01-03 22-31-02-01 22-34-51-02 26-17-51-05 27-51-57-03 27-58-00-02 27-81-00-01 29-21-55-02 31-11-11-19 31-11-16-01 31-11-26-38 31-41-52-02 31-51-52-02 32-35-52-03 32-41-52-02 32-42-55-03 32-46-00-01 32-61-51-03 33-13-57-01A 33-16-52-03 34-12-01-03 34-13-01-03 34-13-02-01 34-13-05-01 34-13-06-01 34-16-51-03 34-21-02-02 34-22-02-02 34-22-05-01A 34-22-06-01 34-24-01-03 34-32-00-02 34-46-51-02 34-51-02-02 34-57-00-01 34-61-01-07 34-61-02-02 77-41-01-01 79-33-51-05	106106	1

MISSING ITEM NUMBERS NOT APPLICABLE

– ITEM NOT ILLUSTRATED

BOEING PROPRIETARY - Copyright © - Unpublished Work - See title page for details.

	FIG ITEM	PART NUMBER	1 2 3 4 5 6 7 NOMENCLATURE	EFFECT FROM TO	UNITS PER ASSY
	3				
R	260	2610-08-1	.CLOCK ASSY-	103106	2
R			SUPPLIER CODE:		
R			V52013		
R			FUNCTIONAL DESCRIPTION:		
R			DIGITAL ELECTRONIC		
R			CHRONOMETER, SHOWS		
R			ELAPSED TIME,		
R			CHRONOGRAPH TIME, DATE		
R			AND GREENWICH MEAN TIME.		
R			SPECIFICATION NUMBER:		
R			60B00303-107		
R			ELECTRICAL EQUIP NUMBER:		
R			N00002		
R			N00042		
R			COMPONENT MAINT MANUAL REF:		
R			31-21-08		
R			QUALIFIED I/W DATA:		
R			2610-08-1(60B00303-107)		
R			I/W		
R			65806-002-1(S231T120-1)		
R			IN SHIPSETS, FOR ALL FMC		
R			EXCEPT S242T102-451 WITH		
R			S/W PS4052970-95X, WHERE		
R			X CAN BE ANY VALUE, AND		
R			S242T102-455.		
R			FOR DETAILS SEE:		
R			31-25-01-50		
	- 295	233N2221-325	.MODULE ASSY-P1-3	103106	RF
			COMPONENT MAINT MANUAL REF:		
			31-11-48		
	300	233N2221-81	..MODULE ASSY-	103106	RF
			USED ON:		
			233N2221-320		
			233N2221-326		
			233N2221-328		
	305	123-3D	...CLAMP-	103106	1
			SUPPLIER CODE:		
			V33463		
			USED ON:		
			233N2221-70		
			233N2221-83		
	- 310	233N2223-337	.MODULE ASSY-P3-3	103106	RF
			COMPONENT MAINT MANUAL REF:		
			31-11-50		
	315	233N2223-62	..MODULE ASSY-	103106	1
			USED ON:		
			233N2223-335		
			233N2223-337		

MISSING ITEM NUMBERS NOT APPLICABLE

- ITEM NOT ILLUSTRATED

BOEING PROPRIETARY - Copyright © - Unpublished Work - See title page for details.

	FIG ITEM	PART NUMBER	1 2 3 4 5 6 7 NOMENCLATURE	EFFECT FROM TO	UNITS PER ASSY
	3				
	320	123-3D	...CLAMP-	103106	1
			SUPPLIER CODE:		
			V33463		
	- 801	286N0001-361	WIRE BUNDLE ASSY-	101101	RF
			REWORKED BY ALERT SB:		
			34A0222		
	- 802	286N0001-365	WIRE BUNDLE ASSY-	102102	RF
			REWORKED BY ALERT SB:		
			34A0222		
	- 804	286N0001-392	WIRE BUNDLE ASSY-	108120	RF
			REWORKED BY ALERT SB:		
			34A0222		
R	- 805	286N0001-709	WIRE BUNDLE ASSY	103106	RF
	810	BACC45FT16A24S	.CONNECTOR-	101106	1
			ELECTRICAL EQUIP NUMBER:	108120	
			D00463		
			WIRING DIAGRAM REF:		
			312511		
	- 815	286N0003-323	WIRE BUNDLE ASSY-	101101	RF
			REWORKED BY ALERT SB:		
			34A0222		
	- 818	286N0003-359	WIRE BUNDLE ASSY-	102102	RF
			REWORKED BY ALERT SB:		
			34A0222		
	- 820	286N0003-384	WIRE BUNDLE ASSY-	108120	RF
			REWORKED BY ALERT SB:		
			34A0222		
	- 821	286N0003-601	WIRE BUNDLE ASSY	103106	RF
	825	BACC45FT16A24S	.CONNECTOR-	101106	1
			ELECTRICAL EQUIP NUMBER:	108120	
			D00465		
			WIRING DIAGRAM REF:		
			312511		

MISSING ITEM NUMBERS NOT APPLICABLE

- ITEM NOT ILLUSTRATED

BOEING PROPRIETARY - Copyright © - Unpublished Work - See title page for details.

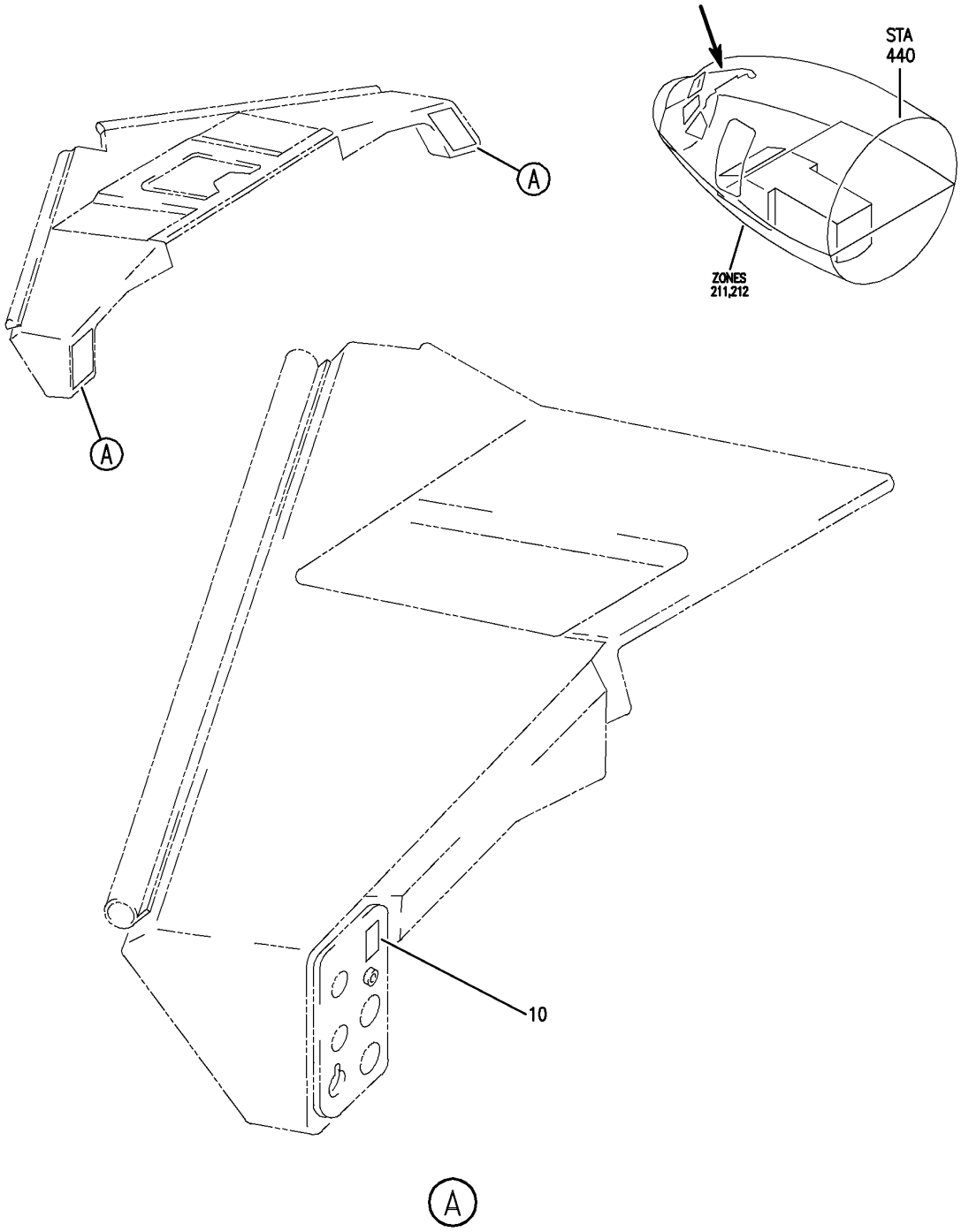

Y 31250105 REV 236

GLARESHIELD ASSY-PILOTS ELECTRICAL (CLOCKS ONLY)
FIGURE 5

BOEING PROPRIETARY - Copyright © - Unpublished Work - See title page for details.

FIG ITEM	PART NUMBER	1 2 3 4 5 6 7 NOMENCLATURE	EFFECT FROM TO	UNITS PER ASSY
5		GLARESHIELD ASSY-PILOTS ELECTRICAL (CLOCKS ONLY)	101106 108120 504903	
- 1	233N8200-61	GLARESHIELD ASSY-PILOTS ELECTRICAL (CLOCKS ONLY) POSITION DATA: LH FOR NHA/OTHER SYS DET SEE: 25-13-03-01	101101	RF
- 1	233N8200-301	GLARESHIELD ASSY-PILOTS ELECTRICAL (CLOCKS ONLY) POSITION DATA: LH FOR NHA/OTHER SYS DET SEE: 25-10-00-15B	102102 108120 504903	RF
- 1	MODREF27489	GLARESHIELD ASSY-PILOTS ELECTRICAL (CLOCKS ONLY) MODULE NUMBER: 233N8200-309 REV C POSITION DATA: LH FOR OTHER SYS DETAILS SEE: 25-13-03-02 33-14-51-01 34-22-51-01 FOR ADDITIONAL DETAILS SEE: 31-25-51-01	104106	1
- 1	MODREF22332	GLARESHIELD ASSY-PILOTS ELECTRICAL (CLOCKS ONLY) MODULE NUMBER: 233N8200-309 REV B POSITION DATA: LH FOR OTHER SYS DETAILS SEE: 25-13-03-02 33-14-51-01 34-22-51-01 FOR ADDITIONAL DETAILS SEE: 31-25-51-01	103103	1
- 5	233N8200-62	GLARESHIELD ASSY-PILOTS ELECTRICAL (CLOCKS ONLY) POSITION DATA: RH FOR NHA/OTHER SYS DET SEE: 25-13-03-01	101101	RF

MISSING ITEM NUMBERS NOT APPLICABLE

- ITEM NOT ILLUSTRATED

BOEING PROPRIETARY - Copyright © - Unpublished Work - See title page for details.

FIG ITEM	PART NUMBER	1 2 3 4 5 6 7 NOMENCLATURE	EFFECT FROM TO	UNITS PER ASSY
5				
- 5	233N8200-302	GLARESHIELD ASSY-PILOTS ELECTRICAL (CLOCKS ONLY) POSITION DATA: RH FOR NHA/OTHER SYS DET SEE: 25-10-00-15B	102102 108120 504903	RF
- 5	MODREF27490	GLARESHIELD ASSY-PILOTS ELECTRICAL (CLOCKS ONLY) MODULE NUMBER: 233N8200-310 REV C POSITION DATA: RH FOR OTHER SYS DETAILS SEE: 25-13-03-02 33-14-51-01 34-22-51-01 FOR ADDITIONAL DETAILS SEE: 31-25-51-01	104106	1
- 5	MODREF22333	GLARESHIELD ASSY-PILOTS ELECTRICAL (CLOCKS ONLY) MODULE NUMBER: 233N8200-310 REV B POSITION DATA: RH FOR OTHER SYS DETAILS SEE: 25-13-03-02 33-14-51-01 34-22-51-01 FOR ADDITIONAL DETAILS SEE: 31-25-51-01	103103	1
10	2PB11H58	.SWITCH-PUSHBUTTON SUPPLIER CODE: V91929	101106 108120 504903	1

MISSING ITEM NUMBERS NOT APPLICABLE

- ITEM NOT ILLUSTRATED

BOEING PROPRIETARY - Copyright © - Unpublished Work - See title page for details.

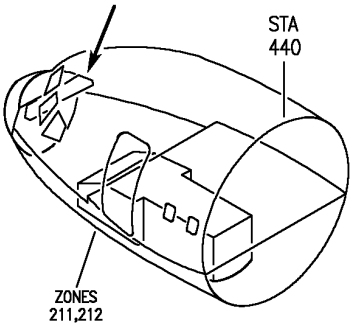

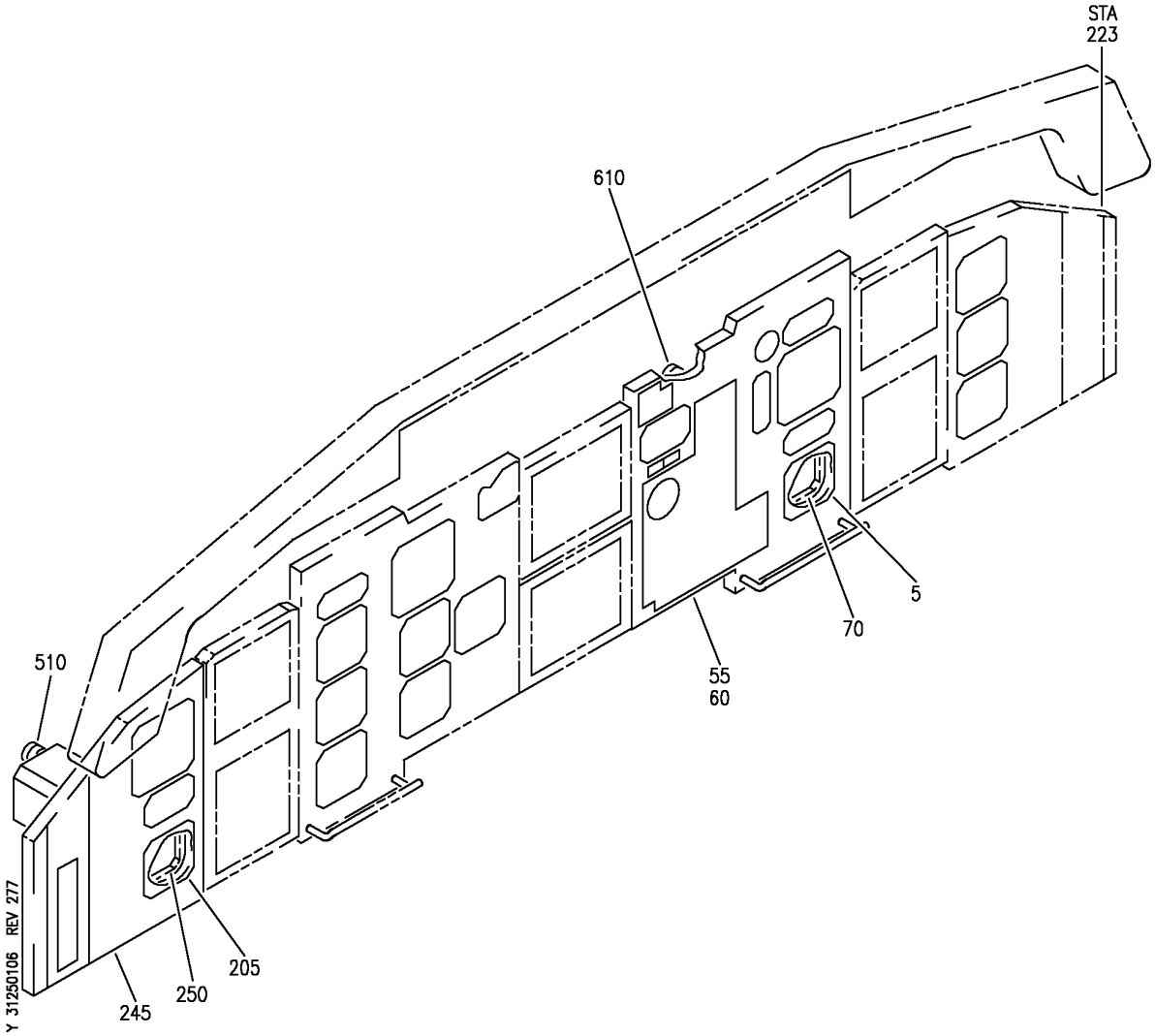

PANEL INSTL-P1-1 AND P3-1 (CLOCKS ONLY)
FIGURE 6

BOEING PROPRIETARY - Copyright © - Unpublished Work - See title page for details.

	FIG ITEM	PART NUMBER	1 2 3 4 5 6 7 NOMENCLATURE	EFFECT FROM TO	UNITS PER ASSY
	6				
			PANEL INSTL-P1-1 AND P3-1 (CLOCKS ONLY)	504903	
	- 1	233N2103-254	PANEL INSTL-P3-1 (CLOCKS ONLY) FOR NHA/OTHER SYS DET SEE: 25-10-00-15B	504903	RF
R	5	2610-08-1	.CLOCK ASSY- SUPPLIER CODE: V52013 FUNCTIONAL DESCRIPTION: DIGITAL ELECTRONIC CHRONOMETER, SHOWS ELAPSED TIME, CHRONOGRAPH TIME, DATE AND GREENWICH MEAN TIME. SPECIFICATION NUMBER: 60B00303-107 ELECTRICAL EQUIP NUMBER: N00042 COMPONENT MAINT MANUAL REF: 31-21-08 QUALIFIED I/W DATA: 2610-08-1(60B00303-107) I/W 65806-002-1(S231T120-1) IN SHIPSETS, FOR ALL FMC EXCEPT S242T102-451 WITH S/W PS4052970-95X, WHERE X CAN BE ANY VALUE, AND S242T102-455. 65807-050-1 AND 2610-08-1 ARE INTERCHANGEABLE AS A SET ONLY FOR DETAILS SEE: 31-25-01-50	504903	1
	- 50	233N2222-326	.MODULE ASSY- COMPONENT MAINT MANUAL REF: 31-11-49 USED ON: 233N2103-254 PRE ALERT SB: 33A0044	504903	RF

MISSING ITEM NUMBERS NOT APPLICABLE

– ITEM NOT ILLUSTRATED

BOEING PROPRIETARY - Copyright © - Unpublished Work - See title page for details.

FIG ITEM	PART NUMBER	1 2 3 4 5 6 7 NOMENCLATURE	EFFECT FROM TO	UNITS PER ASSY
6				
- 50	233N2222-334	.MODULE ASSY- COMPONENT MAINT MANUAL REF: 31-11-49 USED ON: 233N2103-354 PRE ALERT SB: 33A0044	504903	RF
- 50	233N2222-347	.MODULE ASSY- COMPONENT MAINT MANUAL REF: 31-11-49 USED ON: 233N2103-376 PRE ALERT SB: 33A0044	504903	RF
- 50	233N2222-1326	.MODULE ASSY- COMPONENT MAINT MANUAL REF: 31-11-49 USED ON: 233N2103-254 POST ALERT SB: 33A0044	504903	RF
- 50	233N2222-1334	.MODULE ASSY- COMPONENT MAINT MANUAL REF: 31-11-49 USED ON: 233N2103-354 POST ALERT SB: 33A0044	504903	RF
- 50	233N2222-1347	.MODULE ASSY- COMPONENT MAINT MANUAL REF: 31-11-49 USED ON: 233N2103-376 POST ALERT SB: 33A0044	504903	RF
55	233N2222-105	..MODULE ASSY- USED ON: 233N2222-326 PRE ALERT SB: 33A0044	504903	RF
55	233N2222-116	..MODULE ASSY- USED ON: 233N2222-334 PRE ALERT SB: 33A0044	504903	RF

MISSING ITEM NUMBERS NOT APPLICABLE

- ITEM NOT ILLUSTRATED

BOEING PROPRIETARY - Copyright © - Unpublished Work - See title page for details.

FIG ITEM	PART NUMBER	1 2 3 4 5 6 7 NOMENCLATURE	EFFECT FROM TO	UNITS PER ASSY
6				
55	233N2222-127	..MODULE ASSY- USED ON: 233N2222-347 PRE ALERT SB: 33A0044	504903	RF
55	233N2222-1105	..MODULE ASSY- USED ON: 233N2222-1326 POST ALERT SB: 33A0044	504903	RF
55	233N2222-1116	..MODULE ASSY- USED ON: 233N2222-1334 POST ALERT SB: 33A0044	504903	RF
55	233N2222-1127	..MODULE ASSY- USED ON: 233N2222-1347 POST ALERT SB: 33A0044	504903	RF
70	123-3D	...CLAMP- SUPPLIER CODE: V33463	504903	1
- 200	233N2103-152	PANEL INSTL-P1-1 (CLOCKS ONLY) FOR NHA/OTHER SYS DET SEE: 25-10-00-15B	504903	RF

MISSING ITEM NUMBERS NOT APPLICABLE

- ITEM NOT ILLUSTRATED

BOEING PROPRIETARY - Copyright © - Unpublished Work - See title page for details.

	FIG ITEM	PART NUMBER	1 2 3 4 5 6 7 NOMENCLATURE	EFFECT FROM TO	UNITS PER ASSY
	6				
R	205	2610-08-1	.CLOCK ASSY-	504903	RF
R			SUPPLIER CODE:		
R			V52013		
R			FUNCTIONAL DESCRIPTION:		
R			DIGITAL ELECTRONIC		
R			CHRONOMETER, SHOWS		
R			ELAPSED TIME,		
R			CHRONOGRAPH TIME, DATE		
R			AND GREENWICH MEAN TIME.		
R			SPECIFICATION NUMBER:		
R			60B00303-107		
R			ELECTRICAL EQUIP NUMBER:		
R			N00002		
R			COMPONENT MAINT MANUAL REF:		
R			31-21-08		
R			QUALIFIED I/W DATA:		
R			2610-08-1(60B00303-107)		
R			I/W		
R			65806-002-1(S231T120-1)		
R			IN SHIPSETS, FOR ALL FMC		
R			EXCEPT S242T102-451 WITH		
R			S/W PS4052970-95X, WHERE		
R			X CAN BE ANY VALUE, AND		
R			S242T102-455.		
R			FOR DETAILS SEE:		
R			31-25-01-50		
	- 240	233N2220-315	.MODULE ASSY-	504903	RF
			COMPONENT MAINT MANUAL REF:		
			31-11-47		
	245	233N2220-27	..MODULE ASSY	504903	RF
	250	123-3D	...CLAMP-	504903	1
			SUPPLIER CODE:		
			V33463		
	- 500	286N0001-357	WIRE BUNDLE ASSY-CAPT'S	505505	RF
			INSTL PNL (P1-1)	507903	
			REWORKED BY ALERT SB:		
			34A0222		
	- 500	286N0001-382	WIRE BUNDLE ASSY-CAPT'S	504504	RF
			INSTL PNL (P1-1)	506506	
			REWORKED BY ALERT SB:		
			34A0222		
	510	BACC45FT16A24S	.CONNECTOR-	504903	1
			ELECTRICAL EQUIP NUMBER:		
			D00463		
			WIRING DIAGRAM REF:		
			312511		

MISSING ITEM NUMBERS NOT APPLICABLE

– ITEM NOT ILLUSTRATED

BOEING PROPRIETARY - Copyright © - Unpublished Work - See title page for details.

FIG ITEM	PART NUMBER	1 2 3 4 5 6 7 NOMENCLATURE	EFFECT FROM TO	UNITS PER ASSY
6				
- 600	286N0003-355	WIRE BUNDLE ASSY-FIRST OFFICER'S INSTL PNL (P3-1) REWORKED BY ALERT SB: 34A0222	504903	RF
610	BACC45FT16A24S	.CONNECTOR- ELECTRICAL EQUIP NUMBER: D00465 WIRING DIAGRAM REF: 312511	504903	1

MISSING ITEM NUMBERS NOT APPLICABLE

– ITEM NOT ILLUSTRATED

BOEING PROPRIETARY - Copyright © - Unpublished Work - See title page for details.

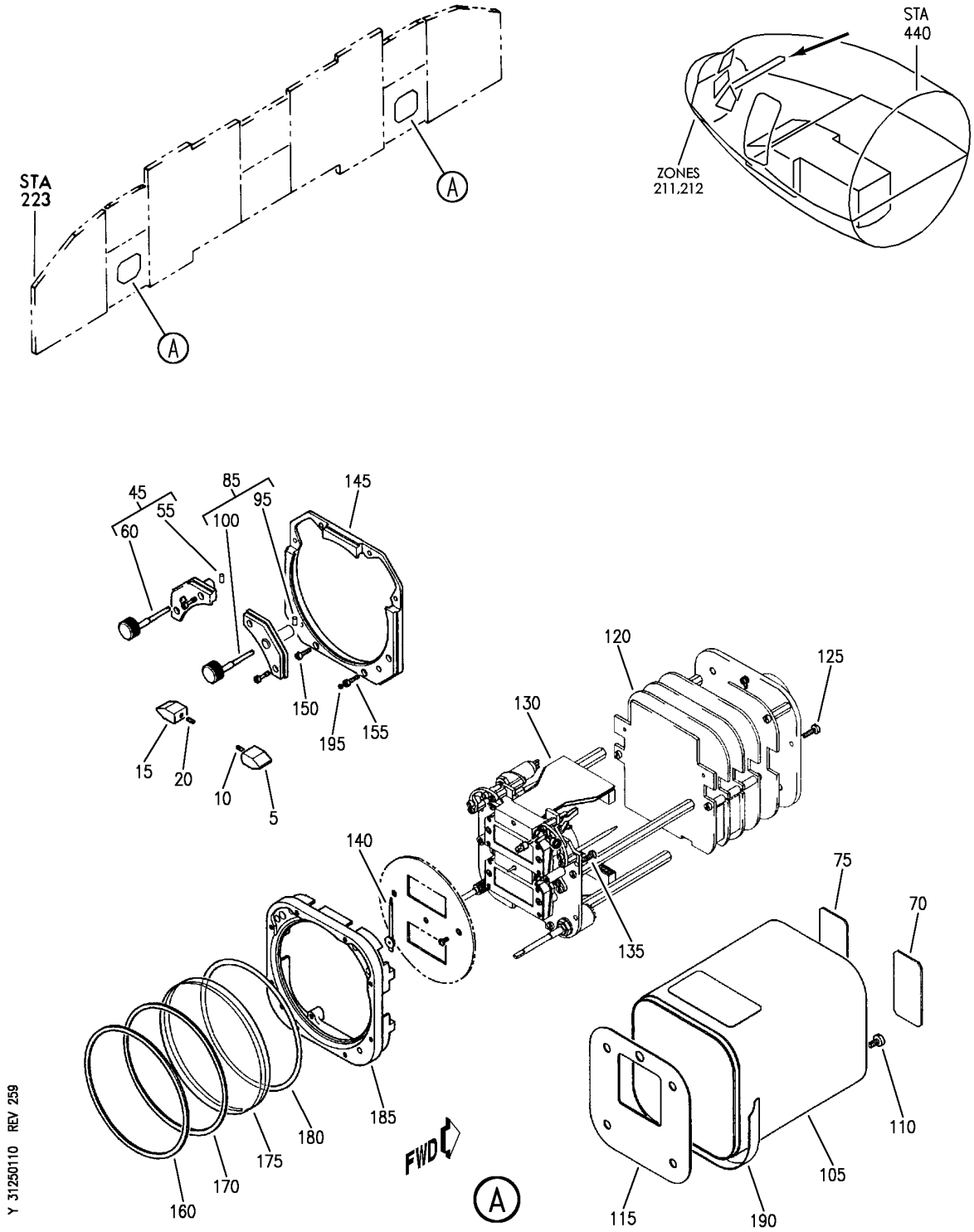

CLOCK ASSY-GMT ELECTRONIC AND AIDS OUTPUT
FIGURE 10

BOEING PROPRIETARY - Copyright © - Unpublished Work - See title page for details.

FIG ITEM	PART NUMBER	1 2 3 4 5 6 7 NOMENCLATURE	EFFECT FROM TO	UNITS PER ASSY
10		CLOCK ASSY-GMT ELECTRONIC AND AIDS OUTPUT	002004 107107 121503 904949 952952	
- 1	65806-002-1	CLOCK ASSY-GMT ELECTRONIC SUPPLIER CODE: VF0216 SPECIFICATION NUMBER: S231T120-1 COMPONENT MAINT MANUAL REF: 31-25-01 QUALIFIED I/W DATA: 2610-08-1(60B00303-107) I/W 65806-002-1(S231T120-1) IN SHIPSETS, FOR ALL FMC EXCEPT S242T102-451 WITH S/W PS4052970-95X, WHERE X CAN BE ANY VALUE, AND S242T102-455. FOR NHA SEE: 31-25-01-01	002004 107107 121503 904949 952952	RF
5	55806-805-1	.KNOB- SUPPLIER CODE: VF0216	002004 107107 121503 904949 952952	1
		ATTACHING PARTS		
10	57035-240-1	.SETSCREW-M2.5 X 4 SUPPLIER CODE: VF0216	002004 107107 121503 904949 952952	1
		-------*-------		
15	55806-815-1	.KNOB- SUPPLIER CODE: VF0216	002004 107107 121503 904949 952952	1
		ATTACHING PARTS		
20	57035-240-1	.SETSCREW-M2.5 X 4 SUPPLIER CODE: VF0216	002004 107107 121503 904949 952952	1
		-------*-------		

MISSING ITEM NUMBERS NOT APPLICABLE

- ITEM NOT ILLUSTRATED

BOEING PROPRIETARY - Copyright © - Unpublished Work - See title page for details.

FIG ITEM	PART NUMBER	1 2 3 4 5 6 7 NOMENCLATURE	EFFECT FROM TO	UNITS PER ASSY
10				
45	55806-765-1	.PLATE ASSY-LAMP COVER SUPPLIER CODE: VF0216 POSITION DATA: LH	002004 107107 121503 904949 952952	RF
55	E1X2-5CA	..PIN-SPR SUPPLIER CODE: VF0313	002004 107107 121503 904949 952952	1
60	55806-790-1	..KNOB ASSY- SUPPLIER CODE: VF0216	002004 107107 121503 904949 952952	1
70	55806-830-1	.LABEL- SUPPLIER CODE: VF0216	002004 107107 121503 904949 952952	1
75	55806-835-1	.LABEL- SUPPLIER CODE: VF0216	002004 107107 121503 904949 952952	1

MISSING ITEM NUMBERS NOT APPLICABLE

– ITEM NOT ILLUSTRATED

BOEING PROPRIETARY - Copyright © - Unpublished Work - See title page for details.

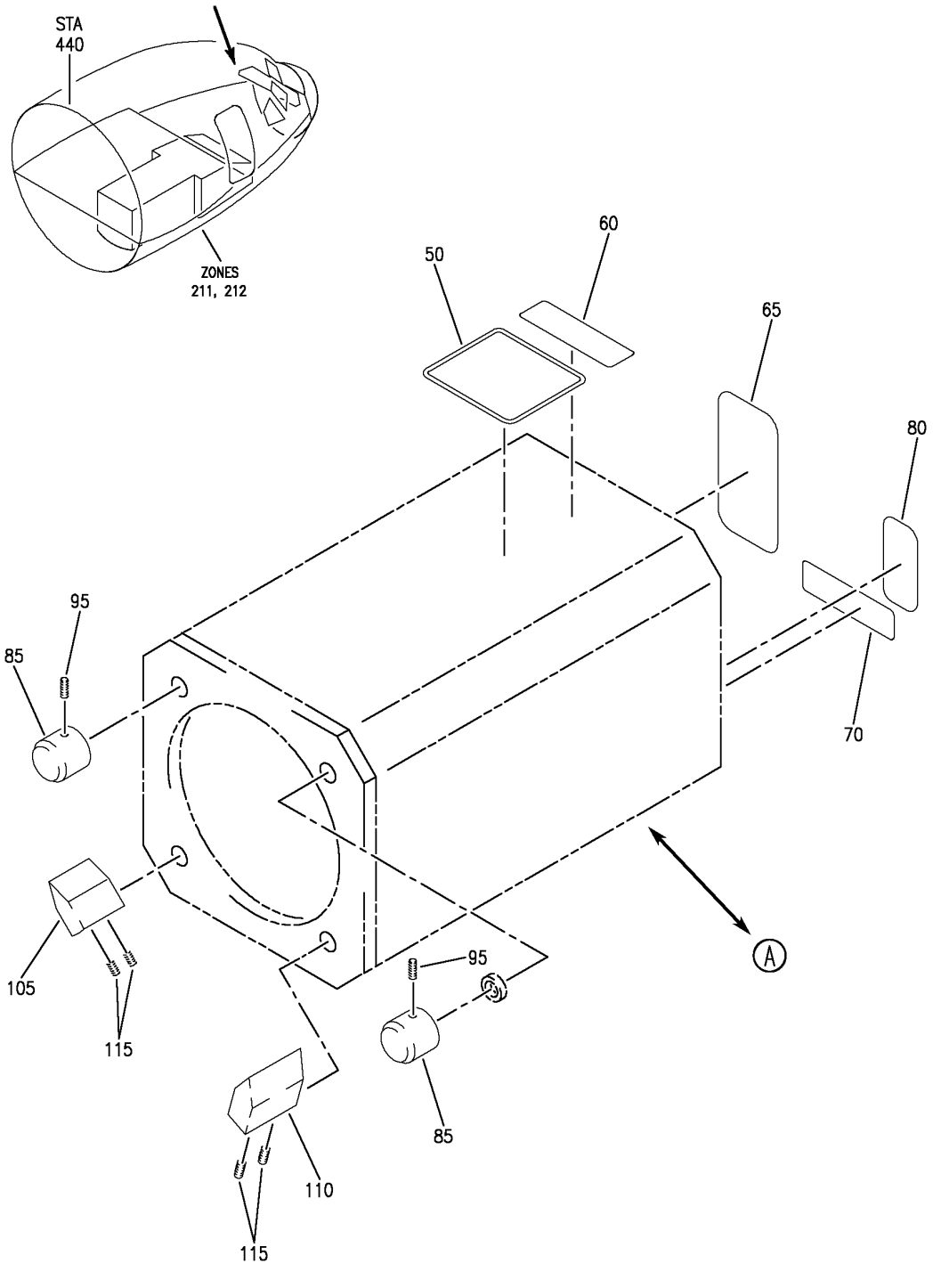

CLOCK ASSY-GMT ELECTRONIC AND AIDS OUTPUT
FIGURE 50 (SHEET 1)

BOEING PROPRIETARY - Copyright © - Unpublished Work - See title page for details.

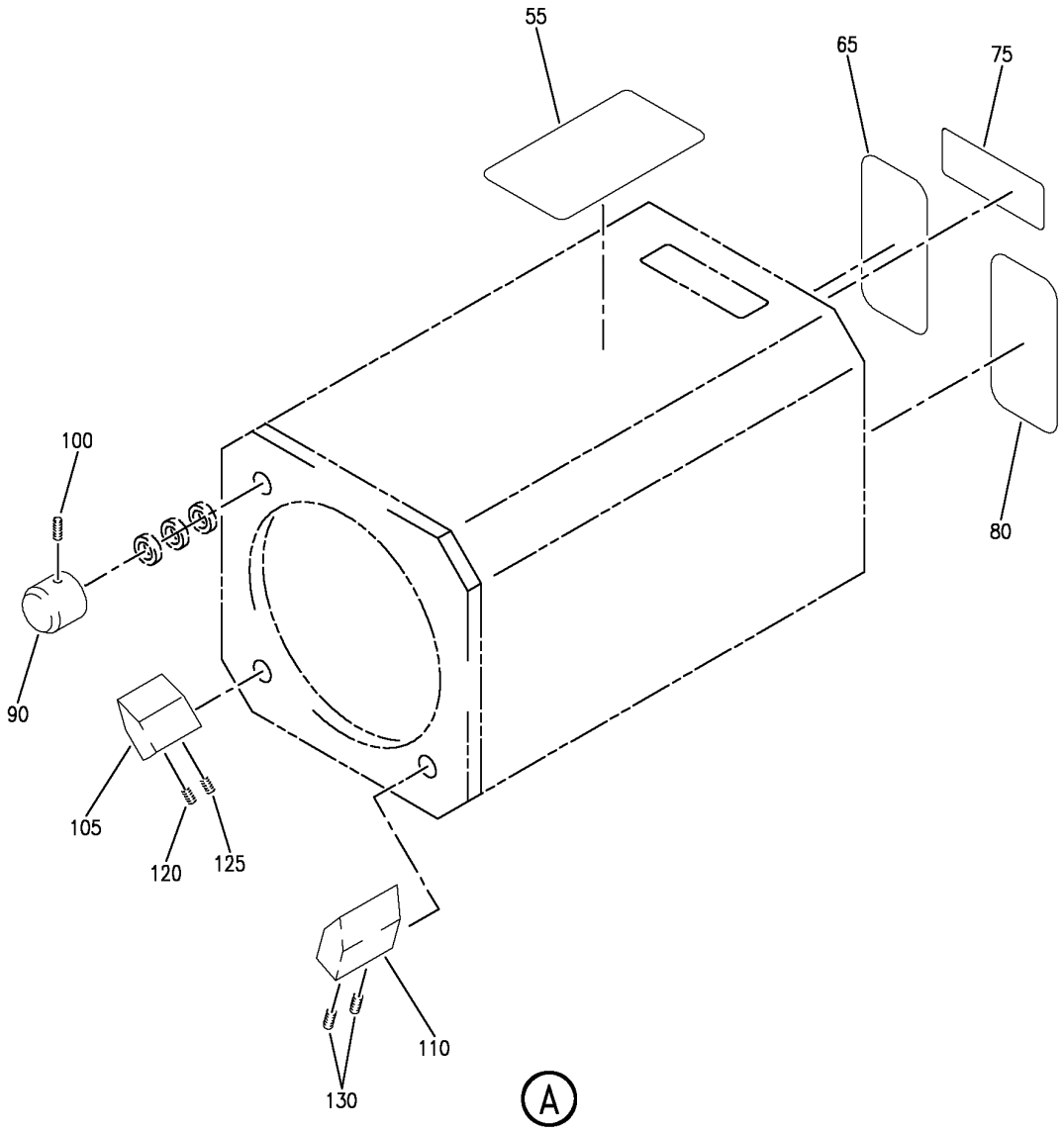

Y 31250150 SHT 2 REV 254

CLOCK ASSY-GMT ELECTRONIC AND AIDS OUTPUT
FIGURE 50 (SHEET 2)

BOEING PROPRIETARY - Copyright © - Unpublished Work - See title page for details.

	FIG ITEM	PART NUMBER	1 2 3 4 5 6 7 NOMENCLATURE	EFFECT FROM TO	UNITS PER ASSY
	50		CLOCK ASSY-GMT ELECTRONIC AND AIDS OUTPUT	006106 108120 504903 950951 953999	
R	- 1	2610-08-1	CLOCK ASSY-	006106	RF
R			SUPPLIER CODE:	108120	
R			V52013	504903	
R			FUNCTIONAL DESCRIPTION:	950951	
R			DIGITAL ELECTRONIC	953999	
R			CHRONOMETER, SHOWS		
R			ELAPSED TIME,		
R			CHRONOGRAPH TIME, DATE		
R			AND GREENWICH MEAN TIME.		
R			SPECIFICATION NUMBER:		
R			60B00303-107		
R			ELECTRICAL EQUIP NUMBER:		
R			N00002		
R			N00042		
R			COMPONENT MAINT MANUAL REF:		
R			31-21-08		
R			QUALIFIED I/W DATA:		
R			2600-06-1 I/W 2610-08-1		
R			SUBJECT TO CUSTOMER		
R			PREFERENCE		
R			2610-08-1(60B00303-107)		
R			I/W		
R			65806-002-1(S231T120-1)		
R			IN SHIPSETS, FOR ALL FMC		
R			EXCEPT S242T102-451 WITH		
R			S/W PS4052970-95X, WHERE		
R			X CAN BE ANY VALUE, AND		
R			S242T102-455.		
R			FOR NHA SEE:		
R			31-25-01-01		
R			31-25-01-02		
R			31-25-01-03		
R			31-25-01-06		
	50	501571-001	.LABEL-ESD	101102	1
			SUPPLIER CODE:	108120	
			V52013	504903	
	50	501571-001	.LABEL-ESD	006100	1
			SUPPLIER CODE:	103106	
			V52013	950951	
				953999	
	60	501892-001	.LABEL-PMA	101102	1
			SUPPLIER CODE:	108120	
			V52013	504903	

MISSING ITEM NUMBERS NOT APPLICABLE

- ITEM NOT ILLUSTRATED

BOEING PROPRIETARY - Copyright © - Unpublished Work - See title page for details.

FIG ITEM	PART NUMBER	1 2 3 4 5 6 7 NOMENCLATURE	EFFECT FROM TO	UNITS PER ASSY
50				
60	501892-001	.LABEL-PMA SUPPLIER CODE: V52013	006100 103106 950951 953999	1
65	501481-002	.PLATE-IDENT SUPPLIER CODE: V52013	101102 108120 504903	1
65	501481-002	.PLATE-IDENT SUPPLIER CODE: V52013	006100 103106 950951 953999	1
70	501277-001	.PLATE-SOFTWARE IDENT SUPPLIER CODE: V52013	101102 108120 504903	1
70	501277-001	.PLATE-SOFTWARE IDENT SUPPLIER CODE: V52013	006100 103106 950951 953999	1
80	500203-001	.LABEL-MOD A SUPPLIER CODE: V52013 SB DATA FROM A CMM: POST 2610-31-2	101102 108120 504903	1
80	500203-001	.LABEL-MOD A SUPPLIER CODE: V52013 SB DATA FROM A CMM: POST 2610-31-2	006100 103106 950951 953999	1
85	501151-002	.KNOB-INSTR SUPPLIER CODE: V52013 CONFIG CHG DATA FROM A CMM: REPLD BY 501151-007	101102 108120 504903	2
85	501151-007	.KNOB-INSTR SUPPLIER CODE: V52013 CONFIG CHG DATA FROM A CMM: REPLS 501151-002	101102 108120 504903	2
85	501151-002	.KNOB-INSTR SUPPLIER CODE: V52013 CONFIG CHG DATA FROM A CMM: REPLD BY 501151-007	006100 103106 950951 953999	2
85	501151-007	.KNOB-INSTR SUPPLIER CODE: V52013 CONFIG CHG DATA FROM A CMM: REPLS 501151-002	006100 103106 950951 953999	2

MISSING ITEM NUMBERS NOT APPLICABLE

– ITEM NOT ILLUSTRATED

BOEING PROPRIETARY - Copyright © - Unpublished Work - See title page for details.

FIG ITEM	PART NUMBER	1 2 3 4 5 6 7 NOMENCLATURE	EFFECT FROM TO	UNITS PER ASSY
50				
		ATTACHING PARTS		
95	900005-002	.SETSCREW-	101102	2
		SUPPLIER CODE:	108120	
		V52013	504903	
95	900005-002	.SETSCREW-	006100	2
		SUPPLIER CODE:	103106	
		V52013	950951	
			953999	
		-------*-------		
105	200650-004	.KNOB-ET	101102	1
		SUPPLIER CODE:	108120	
		V52013	504903	
105	200650-004	.KNOB-ET	006100	1
		SUPPLIER CODE:	103106	
		V52013	950951	
			953999	
110	200650-007	.KNOB-ET	101102	1
		SUPPLIER CODE:	108120	
		V52013	504903	
110	200650-007	.KNOB-ET	006100	1
		SUPPLIER CODE:	103106	
		V52013	950951	
			953999	
		ATTACHING PARTS		
115	900023-001	.SETSCREW-	101102	4
		SUPPLIER CODE:	108120	
		V52013	504903	
		SB DATA FROM A CMM:		
		PRE 2610-31-15 MOD D		
		CONFIG CHG DATA FROM A CMM:		
		REPLD BY 900005-003		
115	900023-001	.SETSCREW-	006100	4
		SUPPLIER CODE:	103106	
		V52013	950951	
		SB DATA FROM A CMM:	953999	
		PRE 2610-31-15 MOD D		
		CONFIG CHG DATA FROM A CMM:		
		REPLD BY 900005-003		
115	900005-003	.SETSCREW-	101102	4
		SUPPLIER CODE:	108120	
		V52013	504903	
		SB DATA FROM A CMM:		
		POST 2610-31-15 MOD D		
		CONFIG CHG DATA FROM A CMM:		
		REPLS 900023-001		

MISSING ITEM NUMBERS NOT APPLICABLE

— ITEM NOT ILLUSTRATED

BOEING PROPRIETARY - Copyright © - Unpublished Work - See title page for details.

FIG ITEM	PART NUMBER	1 2 3 4 5 6 7 NOMENCLATURE	EFFECT FROM TO	UNITS PER ASSY
50				
115	900005-003	.SETSCREW-	006100	4
		SUPPLIER CODE:	103106	
		V52013	950951	
		SB DATA FROM A CMM:	953999	
		POST 2610-31-15 MOD D		
		CONFIG CHG DATA FROM A CMM:		
		REPLS 900023-001		
		-------*-------		

MISSING ITEM NUMBERS NOT APPLICABLE

– ITEM NOT ILLUSTRATED

BOEING PROPRIETARY - Copyright © - Unpublished Work - See title page for details.

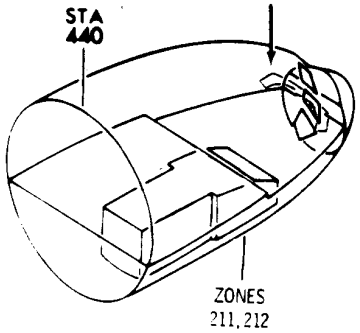

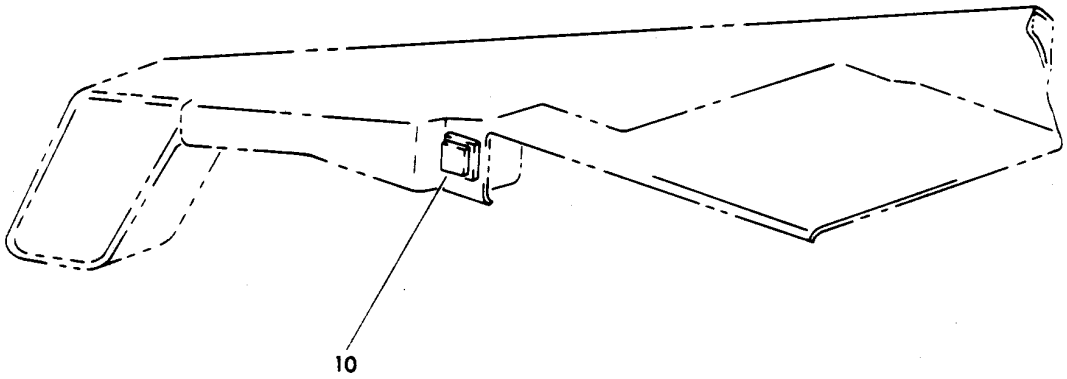

Y 31255101 SHT 1 REV 008

GLARESHIELD ASSY-PILOTS ELECTRICAL (INDICATING/RECORDING ONLY)
FIGURE 1

BOEING PROPRIETARY - Copyright © - Unpublished Work - See title page for details.

FIG ITEM	PART NUMBER	1 2 3 4 5 6 7 NOMENCLATURE	EFFECT FROM TO	UNITS PER ASSY
1		GLARESHIELD ASSY-PILOTS ELECTRICAL (INDICATING/RECORDING ONLY)	002004 006999	
- 1	233N8200-29	GLARESHIELD ASSY-PILOTS ELECTRICAL (INDICATING/ RECORDING ONLY) POSITION DATA: LH FOR NHA/OTHER SYS DET SEE: 25-13-52-60	107107	RF
- 1	233N8200-31	GLARESHIELD ASSY-PILOTS ELECTRICAL (INDICATING/ RECORDING ONLY) POSITION DATA: LH FOR NHA/OTHER SYS DET SEE: 25-13-52-60	107107	RF
- 1	233N8200-25	GLARESHIELD ASSY-PILOTS ELECTRICAL (INDICATING/ RECORDING ONLY) POSITION DATA: LH FOR NHA/OTHER SYS DET SEE: 25-13-52-60	904949	RF
- 1	233N8200-27	GLARESHIELD ASSY-PILOTS ELECTRICAL (INDICATING/ RECORDING ONLY) POSITION DATA: LH FOR NHA/OTHER SYS DET SEE: 25-13-52-60	107107	RF
- 1	233N8200-33	GLARESHIELD ASSY-PILOTS ELECTRICAL (INDICATING/ RECORDING ONLY) POSITION DATA: LH FOR NHA/OTHER SYS DET SEE: 25-13-52-60	904949	RF
- 1	233N8200-37	GLARESHIELD ASSY-PILOTS ELECTRICAL (INDICATING/ RECORDING ONLY) POSITION DATA: LH FOR NHA/OTHER SYS DET SEE: 25-13-52-60	002004 006010 950999	RF

MISSING ITEM NUMBERS NOT APPLICABLE

- ITEM NOT ILLUSTRATED

BOEING PROPRIETARY - Copyright © - Unpublished Work - See title page for details.

FIG ITEM	PART NUMBER	1 2 3 4 5 6 7 NOMENCLATURE	EFFECT FROM TO	UNITS PER ASSY
1				
- 1	233N8200-41	GLARESHIELD ASSY-PILOTS ELECTRICAL (INDICATING/ RECORDING ONLY) POSITION DATA: LH FOR NHA/OTHER SYS DET SEE: 25-13-52-60	121503	RF
- 2	233N8200-49	GLARESHIELD ASSY-PILOTS ELECTRICAL (INDICATING/ RECORDING ONLY) POSITION DATA: LH FOR NHA/OTHER SYS DET SEE: 25-13-52-60	011100	RF
- 2	233N8200-61	GLARESHIELD ASSY-PILOTS ELECTRICAL (INDICATING/ RECORDING ONLY) POSITION DATA: LH FOR NHA/OTHER SYS DET SEE: 25-13-03-01	101101	RF
- 2	233N8200-301	GLARESHIELD ASSY-PILOTS ELECTRICAL (INDICATING/ RECORDING ONLY) POSITION DATA: LH FOR NHA/OTHER SYS DET SEE: 25-10-00-15B	102102 108120 504903	RF
- 3	MODREF27489	GLARESHIELD ASSY-PILOTS ELECTRICAL (INDICATING/ RECORDING ONLY) MODULE NUMBER: 233N8200-309 REV C POSITION DATA: LH FOR OTHER SYS DETAILS SEE: 25-13-03-02 33-14-51-01 34-22-51-01 FOR ADDITIONAL DETAILS SEE: 31-25-01-05	104106	1

MISSING ITEM NUMBERS NOT APPLICABLE

- ITEM NOT ILLUSTRATED

BOEING PROPRIETARY - Copyright © - Unpublished Work - See title page for details.

FIG ITEM	PART NUMBER	1 2 3 4 5 6 7 NOMENCLATURE	EFFECT FROM TO	UNITS PER ASSY
1				
- 3	MODREF22332	GLARESHIELD ASSY-PILOTS ELECTRICAL (INDICATING/ RECORDING ONLY) MODULE NUMBER: 233N8200-309 REV B POSITION DATA: LH FOR OTHER SYS DETAILS SEE: 25-13-03-02 33-14-51-01 34-22-51-01 FOR ADDITIONAL DETAILS SEE: 31-25-01-05	103103	1
- 5	233N8200-30	GLARESHIELD ASSY-PILOTS ELECTRICAL (INDICATING/ RECORDING ONLY) POSITION DATA: RH FOR NHA/OTHER SYS DET SEE: 25-13-52-60	107107	RF
- 5	233N8200-32	GLARESHIELD ASSY-PILOTS ELECTRICAL (INDICATING/ RECORDING ONLY) POSITION DATA: RH FOR NHA/OTHER SYS DET SEE: 25-13-52-60	107107	RF
- 5	233N8200-26	GLARESHIELD ASSY-PILOTS ELECTRICAL (INDICATING/ RECORDING ONLY) POSITION DATA: RH FOR NHA/OTHER SYS DET SEE: 25-13-52-60	904949	RF
- 5	233N8200-28	GLARESHIELD ASSY-PILOTS ELECTRICAL (INDICATING/ RECORDING ONLY) POSITION DATA: RH FOR NHA/OTHER SYS DET SEE: 25-13-52-60	107107	RF
- 5	233N8200-34	GLARESHIELD ASSY-PILOTS ELECTRICAL (INDICATING/ RECORDING ONLY) POSITION DATA: RH FOR NHA/OTHER SYS DET SEE: 25-13-52-60	904949	RF

MISSING ITEM NUMBERS NOT APPLICABLE

- ITEM NOT ILLUSTRATED

BOEING PROPRIETARY - Copyright © - Unpublished Work - See title page for details.

FIG ITEM	PART NUMBER	1 2 3 4 5 6 7 NOMENCLATURE	EFFECT FROM TO	UNITS PER ASSY
1				
- 5	233N8200-38	GLARESHIELD ASSY-PILOTS ELECTRICAL (INDICATING/ RECORDING ONLY) POSITION DATA: RH FOR NHA/OTHER SYS DET SEE: 25-13-52-60	002004 006010 950999	RF
- 5	233N8200-42	GLARESHIELD ASSY-PILOTS ELECTRICAL (INDICATING/ RECORDING ONLY) POSITION DATA: RH FOR NHA/OTHER SYS DET SEE: 25-13-52-60	121503	RF
- 6	233N8200-50	GLARESHIELD ASSY-PILOTS ELECTRICAL (INDICATING/ RECORDING ONLY) POSITION DATA: RH FOR NHA/OTHER SYS DET SEE: 25-13-52-60	011100	RF
- 6	233N8200-62	GLARESHIELD ASSY-PILOTS ELECTRICAL (INDICATING/ RECORDING ONLY) POSITION DATA: RH FOR NHA/OTHER SYS DET SEE: 25-13-03-01	101101	RF
- 6	233N8200-302	GLARESHIELD ASSY-PILOTS ELECTRICAL (INDICATING/ RECORDING ONLY) POSITION DATA: RH FOR NHA/OTHER SYS DET SEE: 25-10-00-15B	102102 108120 504903	RF
- 7	MODREF27490	GLARESHIELD ASSY-PILOTS ELECTRICAL (INDICATING/ RECORDING ONLY) MODULE NUMBER: 233N8200-310 REV C POSITION DATA: RH FOR OTHER SYS DETAILS SEE: 25-13-03-02 33-14-51-01 34-22-51-01 FOR ADDITIONAL DETAILS SEE: 31-25-01-05	104106	1

MISSING ITEM NUMBERS NOT APPLICABLE

- ITEM NOT ILLUSTRATED

BOEING PROPRIETARY - Copyright © - Unpublished Work - See title page for details.

FIG ITEM	PART NUMBER	1 2 3 4 5 6 7 NOMENCLATURE	EFFECT FROM TO	UNITS PER ASSY
1				
- 7	MODREF22333	GLARESHIELD ASSY-PILOTS ELECTRICAL (INDICATING/ RECORDING ONLY) MODULE NUMBER: 233N8200-310 REV B POSITION DATA: RH FOR OTHER SYS DETAILS SEE: 25-13-03-02 33-14-51-01 34-22-51-01 FOR ADDITIONAL DETAILS SEE: 31-25-01-05	103103	1
10	BCREF7748	.SWITCH ASSY-LIGHTED PUSH BUTTON IND WARNING/ CAUTION SUPPLIER CODE: V81590 OVERLENGTH PART NUMBER: 433-673-1001-1042 SPECIFICATION NUMBER: S231T290-1042 ELECTRICAL EQUIP NUMBER: S00507 S00508 FOR DETAILS SEE: 33-13-00-12A	107107	1
10	BCREFA0519	.SWITCH ASSY-LIGHTED PUSH BUTTON IND WARNING/ CAUTION SUPPLIER CODE: V81590 OVERLENGTH PART NUMBER: 433-673-1004-4042 SPECIFICATION NUMBER: S231T290-4042 ELECTRICAL EQUIP NUMBER: S00507 S00508 OPTIONAL PART: S231T290-5042 FOR DETAILS SEE: 33-13-00-42A	002004 006999	1

MISSING ITEM NUMBERS NOT APPLICABLE

- ITEM NOT ILLUSTRATED

BOEING PROPRIETARY - Copyright © - Unpublished Work - See title page for details.

FIG ITEM	PART NUMBER	1 2 3 4 5 6 7 NOMENCLATURE	EFFECT FROM TO	UNITS PER ASSY
1				
10	851-30768-2042	.SWITCH ASSY-LIGHTED PUSH BUTTON IND WARNING/ CAUTION SUPPLIER CODE: V96182 SPECIFICATION NUMBER: S231T290-2042 ELECTRICAL EQUIP NUMBER: S00507 S00508 USED ON: 233N8200-13 FOR DETAILS SEE: 33-13-00-22A	002004 006999	1
10	851-30768-3042	.SWITCH ASSY-LIGHTED PUSH BUTTON IND WARNING/ CAUTION SUPPLIER CODE: V96182 SPECIFICATION NUMBER: S231T290-3042 ELECTRICAL EQUIP NUMBER: S00507 S00508 OPTIONAL PART: S231T290-5042 FOR DETAILS SEE: 33-13-00-32A	002004 006999	1
10	S231T290-5042	.SWITCH ASSY-LIGHTED PUSH BUTTON IND WARNING/ CAUTION ELECTRICAL EQUIP NUMBER: S00507 S00508 OPTIONAL PART: BCREFA0519 V81590 851-30768-3042 V81590	002004 006999	1
10	4336731004-4242	.SWITCH ASSY-LIGHTED PUSH BUTTON IND WARNING/ CAUTION SUPPLIER CODE: V81590 SPECIFICATION NUMBER: S231T290-4242 ELECTRICAL EQUIP NUMBER: S00507 S00508	002004 006999	1

MISSING ITEM NUMBERS NOT APPLICABLE

– ITEM NOT ILLUSTRATED

BOEING PROPRIETARY - Copyright © - Unpublished Work - See title page for details.

FLIGHT DATA RECORDER SYSTEM (FDRS)

BOEING PROPRIETARY - Copyright © - Unpublished Work - See title page for details.

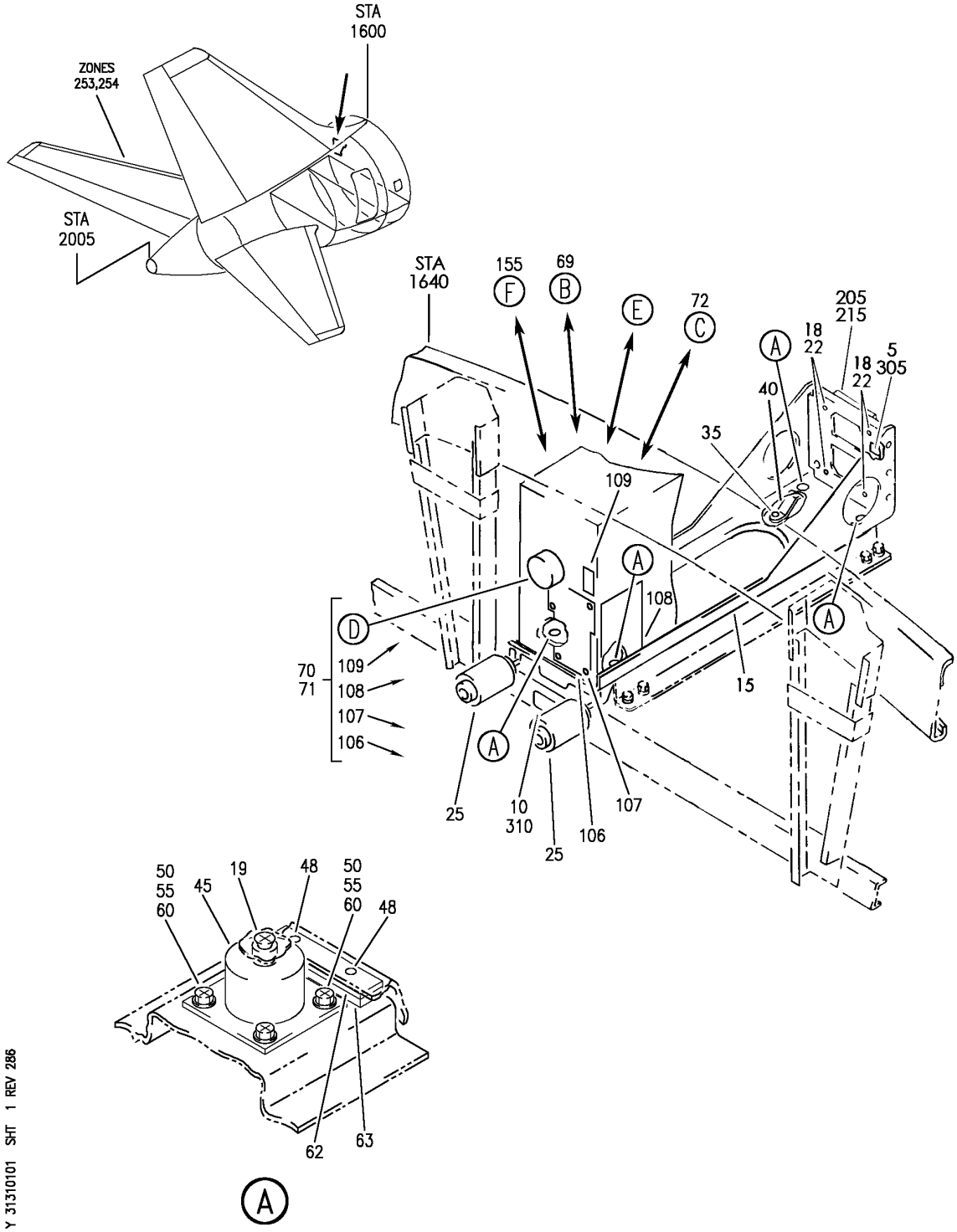

RECORDER AND SUPPORT INSTL-FLIGHT (INSTRUMENTS ONLY)
FIGURE 1 (SHEET 1)

BOEING PROPRIETARY - Copyright © - Unpublished Work - See title page for details.

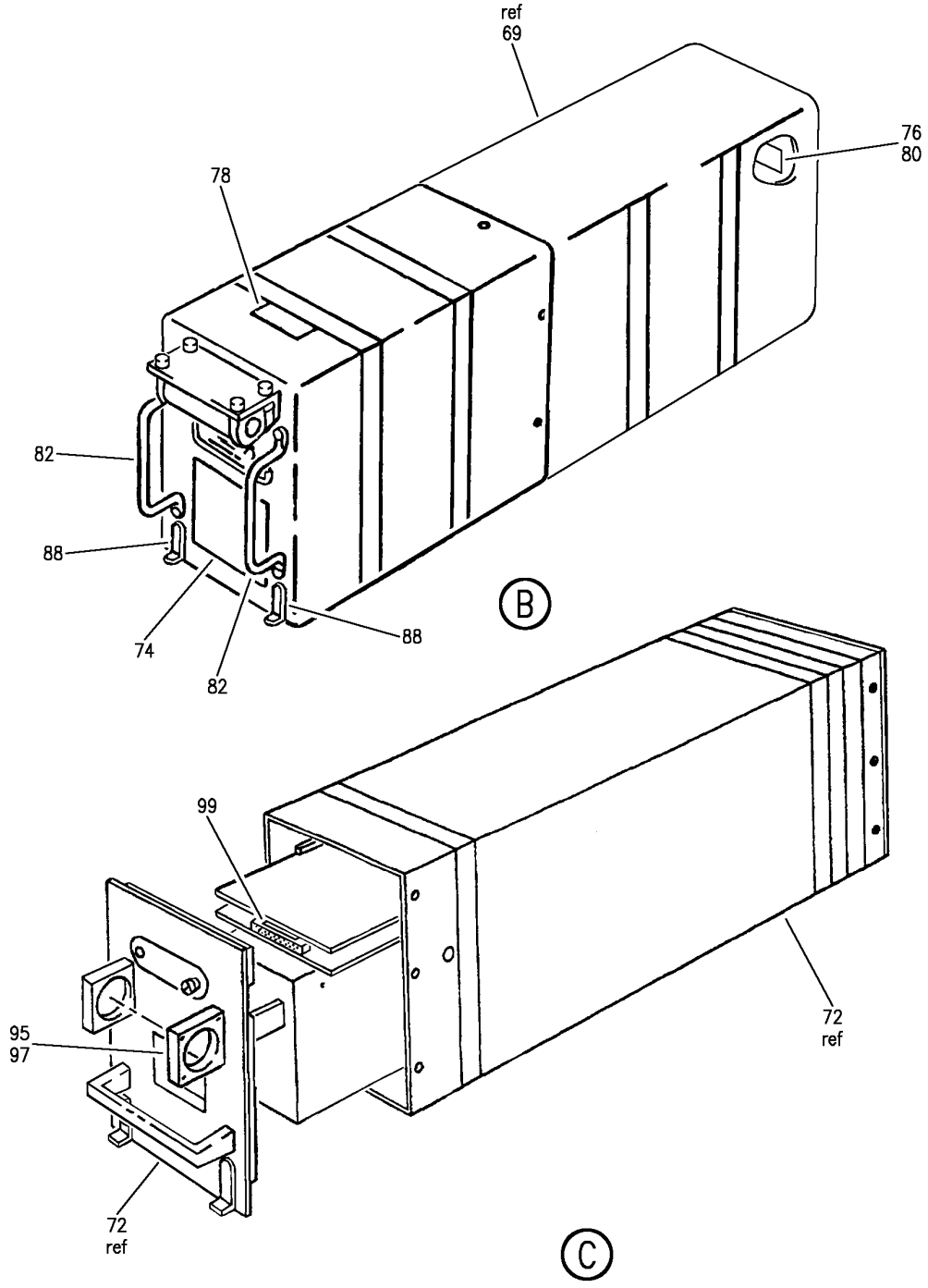

RECORDER AND SUPPORT INSTL-FLIGHT (INSTRUMENTS ONLY)
FIGURE 1 (SHEET 2)

BOEING PROPRIETARY - Copyright © - Unpublished Work - See title page for details.

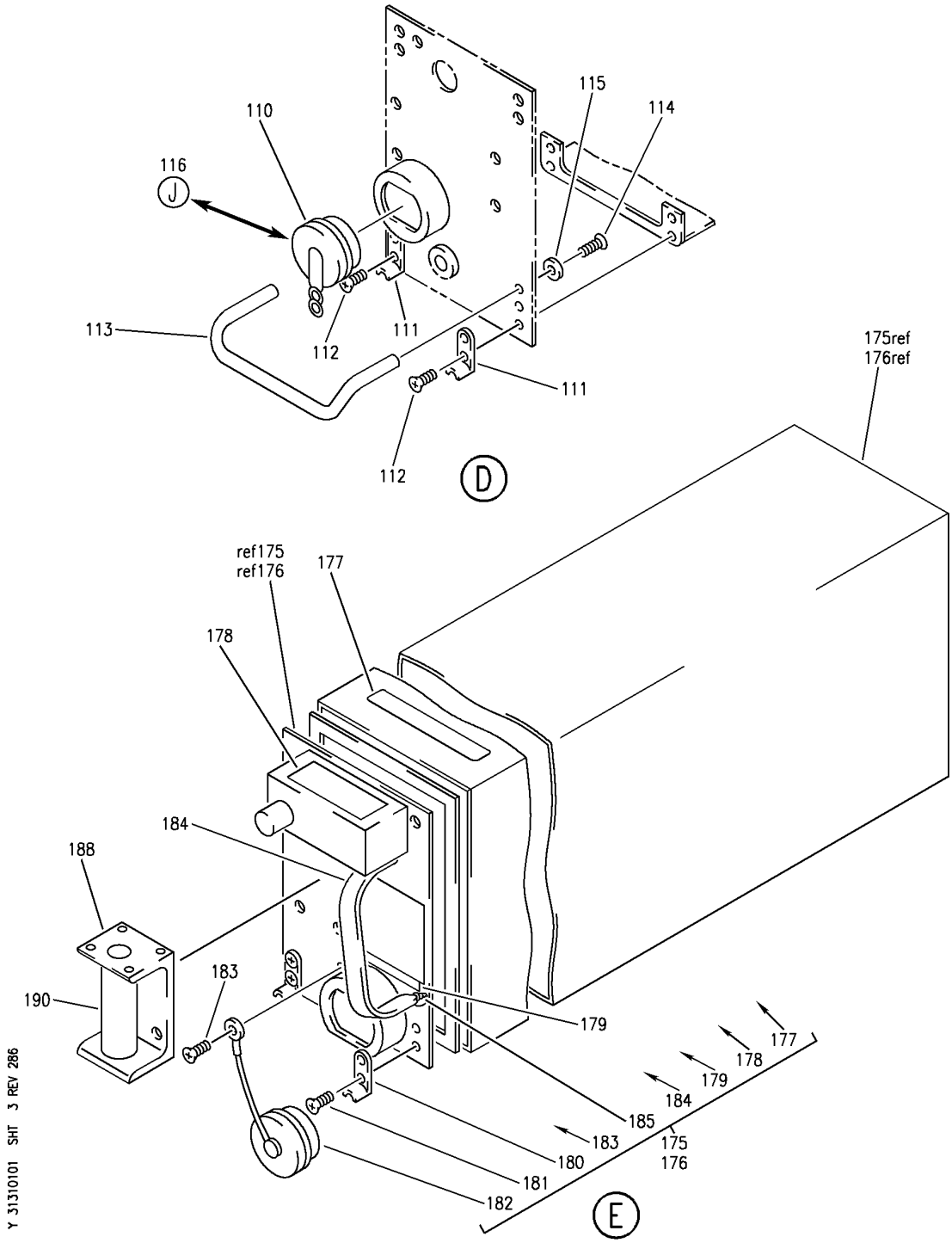

RECORDER AND SUPPORT INSTL-FLIGHT (INSTRUMENTS ONLY)
FIGURE 1 (SHEET 3)

BOEING PROPRIETARY - Copyright © - Unpublished Work - See title page for details.

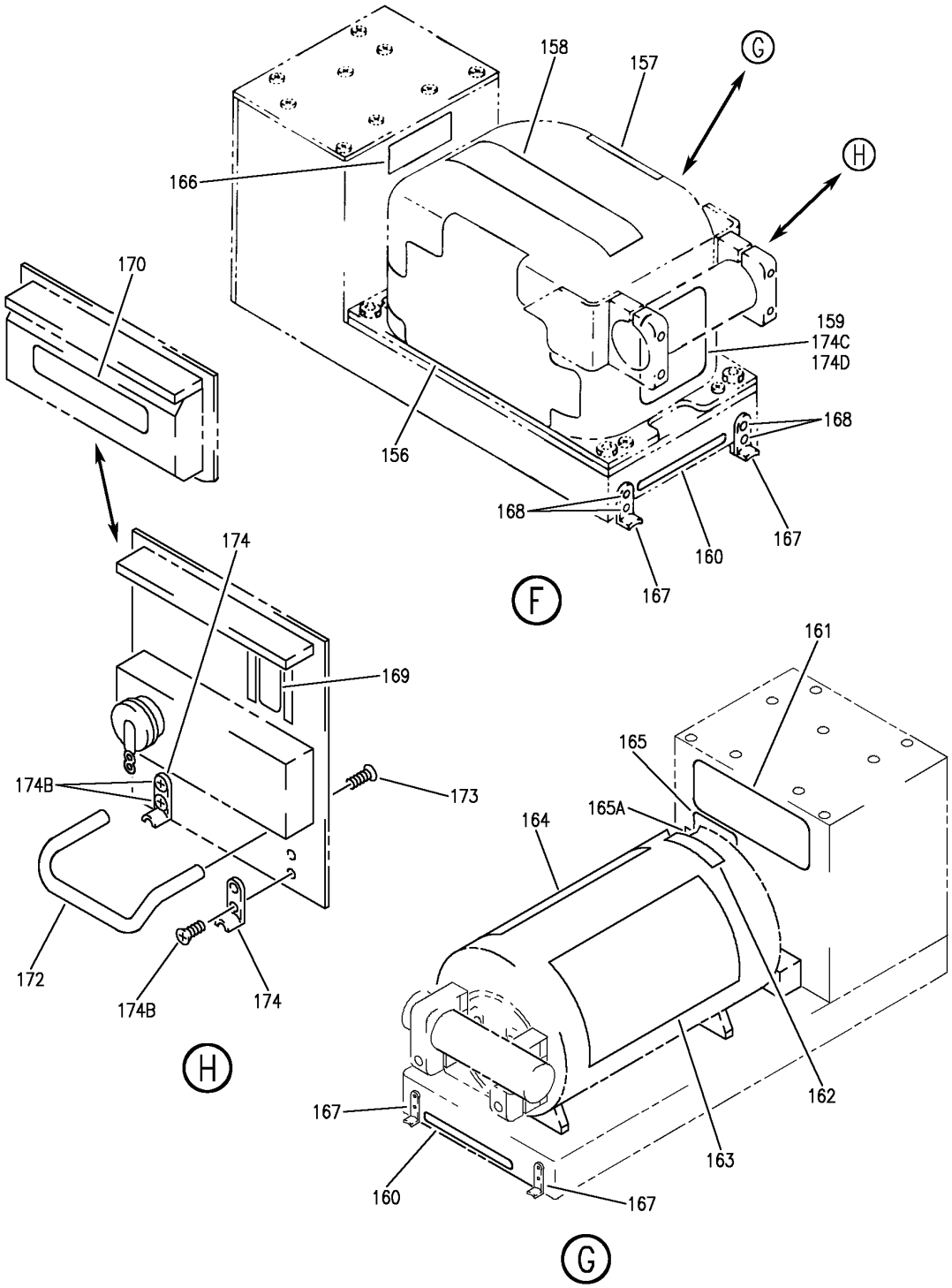

Y 31310101 SHT 4 REV 271

RECORDER AND SUPPORT INSTL-FLIGHT (INSTRUMENTS ONLY)
FIGURE 1 (SHEET 4)

BOEING PROPRIETARY - Copyright © - Unpublished Work - See title page for details.

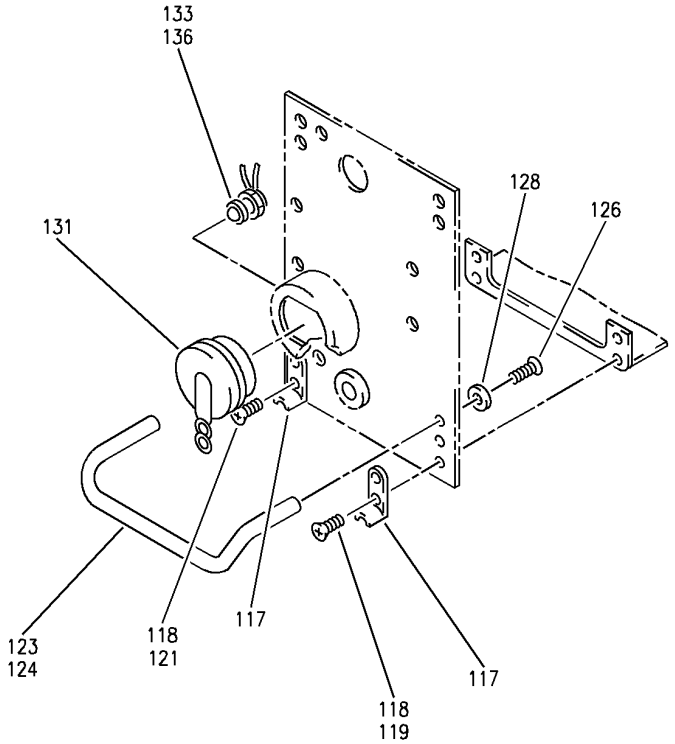

J

Y 31310101 SHT 5 REV 286

RECORDER AND SUPPORT INSTL-FLIGHT (INSTRUMENTS ONLY)
FIGURE 1 (SHEET 5)

BOEING PROPRIETARY - Copyright © - Unpublished Work - See title page for details.

FIG ITEM	PART NUMBER	1 2 3 4 5 6 7 NOMENCLATURE	EFFECT FROM TO	UNITS PER ASSY
1				
		RECORDER AND SUPPORT INSTL-FLIGHT (INSTRUMENTS ONLY)	002004 006999	
- 1	284N1469-12	SUPPORT INSTL-FLIGHT RECORDER (INSTRUMENTS ONLY) FOR NHA/OTHER SYS DET SEE: 24-00-58-01B	107107 904949	RF
- 1	284N1469-18	SUPPORT INSTL-FLIGHT RECORDER (INSTRUMENTS ONLY) FOR NHA/OTHER SYS DET SEE: 24-00-58-01B	002004 006100 121503 950999	RF
- 1	284N1469-19	SUPPORT INSTL-FLIGHT RECORDER (INSTRUMENTS ONLY) FOR NHA/OTHER SYS DET SEE: 24-00-58-05A	101102 504903	RF
5	BAC27NEL0291	.DECAL- PLACARD CONTENT: D13	002004 006102 107107 121999	1
10	BAC27NEL0293	.DECAL- PLACARD CONTENT: M200 RECORDER DIGITAL FLIGHT DATA	002004 006102 107107 121999	1
15	284N1479-2	.TRAY ASSY-1/2 ATR FLIGHT RECORDER	002004 006102 107107 121999	1
		ATTACHING PARTS		
18	NAS1801-04-6	.SCREW-	002004 006102 107107 121999	4
19	NAS514P832-7	.SCREW	002004 006102 107107 121999	4
22	MS21042L04	.NUT-	002004 006102 107107 121999	4
		-------*-------		

MISSING ITEM NUMBERS NOT APPLICABLE

- ITEM NOT ILLUSTRATED

BOEING PROPRIETARY - Copyright © - Unpublished Work - See title page for details.

FIG ITEM	PART NUMBER	1 2 3 4 5 6 7 NOMENCLATURE	EFFECT FROM TO	UNITS PER ASSY
1				
25	2450-100-1T	..HOLDDOWN-	002004	2
		SUPPLIER CODE:	006102	
		V30528	107107	
		OPTIONAL PART:	121999	
		CA12095-101		
		V29372		
		CA12095-102		
		V29372		
		CA12145-102		
		V29372		
25	CA12095-101	..HOLDDOWN-	002004	2
		SUPPLIER CODE:	006102	
		V29372	107107	
		OPTIONAL PART:	121999	
		CA12095-102		
		V29372		
		2450-100-1T		
		V30528		
		CA12145-102		
		V29372		
25	CA12095-102	..HOLDDOWN-	002004	2
		SUPPLIER CODE:	006102	
		V29372	107107	
		OPTIONAL PART:	121999	
		CA12095-101		
		V29372		
		2450-100-1T		
		V30528		
		CA12145-102		
		V29372		
25	CA12145-102	..HOLDDOWN-	002004	2
		SUPPLIER CODE:	006102	
		V29372	107107	
		OPTIONAL PART:	121999	
		CA12095-101		
		V29372		
		2450-100-1T		
		V30528		
		CA12095-102		
		V29372		
		ATTACHING PARTS		
- 30	NAS514P632-4	..SCREW	002004	4
			006102	
			107107	
			121999	
		-------*-------		

MISSING ITEM NUMBERS NOT APPLICABLE

- ITEM NOT ILLUSTRATED

BOEING PROPRIETARY - Copyright © - Unpublished Work - See title page for details.

FIG ITEM	PART NUMBER	1 2 3 4 5 6 7 NOMENCLATURE	EFFECT FROM TO	UNITS PER ASSY
1				
35	BACR15BB6D	.RIVET-	002004	1
		SIZE DETERMINED ON INSTL.	006102	
			107107	
			121999	
40	66-20117-1	.JUMPER	002004	1
			006102	
			107107	
			121999	
45	L44BA10	.ISOLATOR-	002004	4
		SUPPLIER CODE:	006102	
		V13636	107107	
			121999	
		ATTACHING PARTS		
48	BACR15FT5D	.RIVET-	002004	8
		SIZE DETERMINED ON INSTL.	006102	
			107107	
			121999	
50	NAS1801-08-8	.SCREW	002004	16
			006102	
			107107	
			121999	
55	AN960PD8L	.WASHER-	002004	32
			006102	
			107107	
			121999	
60	MS21042L08	.NUT-	002004	16
			006102	
			107107	
			121999	
		-------*-------		
62	BACF3F007X020NN	.FILLER	002004	4
			006102	
			107107	
			121999	
63	BACS40R07C20F	.SHIM-	002004	4
			006102	
			107107	
			121999	
- 65	284N1469-9	RECORDER INSTL-FLIGHT	107107	RF
		(INSTRUMENTS ONLY)		
		FOR NHA/OTHER SYS DET SEE:		
		24-00-58-01B		
- 65	284N1469-15	RECORDER INSTL-FLIGHT	002004	RF
		(INSTRUMENTS ONLY)	006100	
		FOR NHA/OTHER SYS DET SEE:	121503	
		24-00-58-01B	904999	

MISSING ITEM NUMBERS NOT APPLICABLE

- ITEM NOT ILLUSTRATED

BOEING PROPRIETARY - Copyright © - Unpublished Work - See title page for details.

FIG ITEM	PART NUMBER	1 2 3 4 5 6 7 NOMENCLATURE	EFFECT FROM TO	UNITS PER ASSY
1				
- 66	284N1469-37	RECORDER INSTL-FLIGHT (INSTRUMENTS ONLY) FOR NHA/OTHER SYS DET SEE: 24-00-58-05D	504903	RF
- 66	284N1469-55	RECORDER INSTL-FLIGHT (INSTRUMENTS ONLY) FOR NHA SEE: 24-00-58-05A	101102	RF
- 67	284N1469-202	RECORDER INSTL-FLIGHT (INSTRUMENTS ONLY) FOR NHA SEE: 24-00-58-05D	108120	RF
- 67	MODREF10590	RECORDER INSTL-FLIGHT (INSTRUMENTS ONLY) MODULE NUMBER: 284N1469-202 REV A	103103	1
- 67	MODREF27749	RECORDER INSTL-FLIGHT (INSTRUMENTS ONLY) MODULE NUMBER: 284N1469-202 REV B	104106	1
R 69	10077A500-803	.RECORDER-FLIGHT SUPPLIER CODE: V1NFM4 ELECTRICAL EQUIP NUMBER: M00200 COMPONENT MAINT MANUAL REF: 31-31-04 FOR ADDITIONAL DETAILS SEE: 31-31-02-01	101106 108120 504903	1

MISSING ITEM NUMBERS NOT APPLICABLE

- ITEM NOT ILLUSTRATED

BOEING PROPRIETARY - Copyright © - Unpublished Work - See title page for details.

	FIG ITEM	PART NUMBER	1 2 3 4 5 6 7 NOMENCLATURE	EFFECT FROM TO	UNITS PER ASSY
	1				
R	70	980-4100DXUN	.RECORDER ASSY-UNIVERSAL	002004	1
R			DATA	006100	
R			SUPPLIER CODE:	107107	
R			V97896	904949	
R			MISCELLANEOUS DATA:	952999	
R			980-4100BXUN (SFE) AND		
R			980-4100DXUN (BFE) ARE		
R			THE SAME FLIGHT		
R			RECORDER.		
R			P/N VARIES WHETHER IT IS		
R			BFE OR SFE. 980-4100BXUN		
R			IS FULLY I/W		
R			980-4100DXUN.		
R			ELECTRICAL EQUIP NUMBER:		
R			M00200		
R			COMPONENT MAINT MANUAL REF:		
R			31-30-32		
R			QUALIFIED I/W DATA:		
R			980-4100DXUN I/W		
R			980-4100EXUN EXCEPT		
R			SUBJECT TO CUSTOMER		
R			PREFERENCE		
R			980-4100DXUS,		
R			980-4100DXUN I/W		
R			S800-2000-00 SUBJECT		
R			TO CUSTOMER PREFERENCE		
R			OPTIONAL PART:		
R			980-4700-034		
R			V97896		
R			FOR ADDITIONAL DETAILS SEE:		
R			31-31-02-01		

MISSING ITEM NUMBERS NOT APPLICABLE

— ITEM NOT ILLUSTRATED

BOEING PROPRIETARY - Copyright © - Unpublished Work - See title page for details.

FIG ITEM	PART NUMBER	1 2 3 4 5 6 7 NOMENCLATURE	EFFECT FROM TO	UNITS PER ASSY
1				
70	980-4100DXUN	.RECORDER ASSY-UNIVERSAL DATA SUPPLIER CODE: V97896 MISCELLANEOUS DATA: 980-4100BXUN (SFE) AND 980-4100DXUN (BFE) ARE THE SAME FLIGHT RECORDER. P/N VARIES WHETHER IT IS BFE OR SFE. 980-4100BXUN IS FULLY I/W 980-4100DXUN. ELECTRICAL EQUIP NUMBER: M00200 COMPONENT MAINT MANUAL REF: 31-30-33 QUALIFIED I/W DATA: 980-4100DXUN I/W 980-4100EXUN EXCEPT SUBJECT TO CUSTOMER PREFERENCE FOR ADDITIONAL DETAILS SEE: 31-31-02-01	121503	1
74	10138D513-101	..NAMEPLATE-209F DFDR SUPPLIER CODE: V92685 USED ON: 10077A500-803	101106 108120 504903	1
78	10077D525-101K	..NAMEPLATE-MOD SUPPLIER CODE: V92685 USED ON: 10077A500-803	101106 108120 504903	1
80	9900P00166-001	..NAMEPLATE-STATIC SUPPLIER CODE: V92685 USED ON: 10077A500-803	101106 108120 504903	1
82	9900P00170-001	..HANDLE- SUPPLIER CODE: V92685 ATTACHING PARTS	101106 108120 504903	2
- 84	10077D207-101	..SCREW- SUPPLIER CODE: V92685	101106 108120 504903	4

MISSING ITEM NUMBERS NOT APPLICABLE

- ITEM NOT ILLUSTRATED

BOEING PROPRIETARY - Copyright © - Unpublished Work - See title page for details.

FIG ITEM	PART NUMBER	1 2 3 4 5 6 7 NOMENCLATURE	EFFECT FROM TO	UNITS PER ASSY
1				
- 86	MS35338-80	..WASHER	101106 108120 504903	4
		-------*-------		
88	9900P00171-001	..HOOK- SUPPLIER CODE: V92685 ATTACHING PARTS	101106 108120 504903	2
- 90	MS51957-42	..SCREW	101106 108120 504903	4
- 92	MS35338-80	..WASHER	101106 108120 504903	4
		-------*-------		
106	620-1351-004	..PLATE-IDENT SUPPLIER CODE: V97896 CONFIG CHG DATA FROM A CMM: REPLD BY 620-1351-007 USED ON: 980-4100AXUS 980-4100DXUN 980-4100DXUS	002004 006100 107107 121503 904949 952999	1
106	620-1351-007	..PLATE-IDENT SUPPLIER CODE: V97896 CONFIG CHG DATA FROM A CMM: REPLD BY 620-1351-008 REPLD BY 620-1351-009 REPLS 620-1351-004 REPLS 620-1351-002 USED ON: 980-4100AXUS 980-4100BXUS 980-4100DXUN 980-4100DXUS 980-4100EXUN 980-4100GMUN 980-4100HXUS USED WITH: 643-0448-001	002004 006100 107107 121503 904949 952999	1

MISSING ITEM NUMBERS NOT APPLICABLE

- ITEM NOT ILLUSTRATED

BOEING PROPRIETARY - Copyright © - Unpublished Work - See title page for details.

FIG ITEM	PART NUMBER	1 2 3 4 5 6 7 NOMENCLATURE	EFFECT FROM TO	UNITS PER ASSY
1				
106	620-1351-008	..PLATE-IDENT	002004	1
		SUPPLIER CODE:	006100	
		V97896	107107	
		CONFIG CHG DATA FROM A CMM:	121503	
		REPLS 620-1351-003	904949	
		REPLS 620-1351-007	952999	
		USED ON:		
		980-4100AXUS		
		980-4100DXUN		
		980-4100DXUS		
		USED WITH:		
		643-0448-001		
106	620-1351-002	..PLATE-IDENT	002004	1
		SUPPLIER CODE:	006100	
		V97896	107107	
		CONFIG CHG DATA FROM A CMM:	121503	
		REPLD BY 620-1351-007	904949	
		USED ON:	952999	
		980-4100AXUS		
		980-4100DXUN		
		980-4100DXUS		
106	620-1351-003	..PLATE-IDENT	002004	1
		SUPPLIER CODE:	006100	
		V97896	107107	
		CONFIG CHG DATA FROM A CMM:	121503	
		REPLD BY 620-1351-008	904949	
		REPLD BY 620-1351-009	952999	
		REPLS 620-1351-001		
		USED ON:		
		980-4100AXUS		
		980-4100BXUS		
		980-4100DXUN		
		980-4100DXUS		
		980-4100EXUN		
106	620-1351-009	..PLATE-IDENT	002004	1
		SUPPLIER CODE:	006100	
		V97896	107107	
		CONFIG CHG DATA FROM A CMM:	121503	
		REPLS 620-1351-003	904949	
		REPLS 620-1351-007	952999	
		USED ON:		
		980-4100AXUS		
		980-4100BXUS		
		980-4100DXUN		
		980-4100DXUS		

MISSING ITEM NUMBERS NOT APPLICABLE

– ITEM NOT ILLUSTRATED

BOEING PROPRIETARY - Copyright © - Unpublished Work - See title page for details.

FIG ITEM	PART NUMBER	1 2 3 4 5 6 7 NOMENCLATURE	EFFECT FROM TO	UNITS PER ASSY
1				
		ATTACHING PARTS		
107	MS51957-1	..SCREW	002004 006100 107107 121503 904949 952999	6
		-------*-------		
108	643-0448-001	..LABEL-PATENT SUPPLIER CODE: V97896 USED ON: 980-4100AXUS 980-4100BXUS 980-4100DXUN 980-4100DXUS 980-4100EXUN USED WITH: 620-1351-007 620-1351-008	002004 006100 107107 121503 904949 952999	1
109	620-0723-005	..PLATE-MOD SUPPLIER CODE: V97896 SB DATA FROM A CMM: POST 980-4100-31-08 POST 980-4100-31-11 POST 980-4100-31-13 POST 12 POST 16 POST 22 USED ON: 980-4100AXUS 980-4100BXUS 980-4100DXUN 980-4100DXUS 980-4100EXUN 980-4100GMUN 980-4100HXUS	002004 006100 107107 121503 904949 952999	1
116	617-3716-001	..CHASSIS ASSY- SUPPLIER CODE: V97896 CONFIG CHG DATA FROM A CMM: REPLACED BY 617-3716-002 COMPONENT MAINT MANUAL REF: 31-30-32	002004 006102 107107 121503 904949 952999	1

MISSING ITEM NUMBERS NOT APPLICABLE

– ITEM NOT ILLUSTRATED

BOEING PROPRIETARY - Copyright © - Unpublished Work - See title page for details.

FIG ITEM	PART NUMBER	1 2 3 4 5 6 7 NOMENCLATURE	EFFECT FROM TO	UNITS PER ASSY
1				
116	617-3716-002	..CHASSIS ASSY- SUPPLIER CODE: V97896 CONFIG CHG DATA FROM A CMM: REPLACES 617-3716-001 REPLACED BY 617-4640-006 COMPONENT MAINT MANUAL REF: 31-30-32	002004 006102 107107 121503 904949 952999	1
116	617-3716-006	..CHASSIS ASSY- SUPPLIER CODE: V97896 CONFIG CHG DATA FROM A CMM: SUPSDS 617-3716-002 REPLACED BY 617-4640-006 COMPONENT MAINT MANUAL REF: 31-30-32	002004 006102 107107 121503 904949 952999	1
116	617-3715-005	..CHASSIS ASSY- SUPPLIER CODE: V97896 CONFIG CHG DATA FROM A CMM: SUPSDS 617-3716-006 REPLACED BY 617-4640-006 COMPONENT MAINT MANUAL REF: 31-30-32	002004 006102 107107 121503 904949 952999	1
116	617-4640-006	..CHASSIS ASSY- SUPPLIER CODE: V97896 CONFIG CHG DATA FROM A CMM: REPLACES 617-3716-006 REPLACES 617-3715-005 COMPONENT MAINT MANUAL REF: 31-30-32	002004 006102 107107 121503 904949 952999	1
117	652-2002-001	...HOOK- SUPPLIER CODE: V97896 ATTACHING PARTS	002004 006102 107107 121503 904949 952999	2
118	MS51957-45	...SCREW	002004 006102 107107 121503 904949 952999	4

MISSING ITEM NUMBERS NOT APPLICABLE

– ITEM NOT ILLUSTRATED

BOEING PROPRIETARY - Copyright © - Unpublished Work - See title page for details.

FIG ITEM	PART NUMBER	1 2 3 4 5 6 7 NOMENCLATURE	EFFECT FROM TO	UNITS PER ASSY
1				
119	MS51957-45	...SCREW	002004 006102 107107 121503 904949 952999	2
121	MS51957-43	...SCREW- CONFIG CHG DATA FROM A CMM: SUPSD BY MS51957-43	002004 006102 107107 121503 904949 952999	2
121	MS51957-45	...SCREW- CONFIG CHG DATA FROM A CMM: SUPERSEDES MS51957-43	002004 006102 107107 121503 904949 952999	2
		-------*-------		
123	G2525-4	...HANDLE- SUPPLIER CODE: V04729 USED ON: 617-4640-006	002004 006102 107107 121503 904949 952999	1
124	G2525-4	...HANDLE- SUPPLIER CODE: V04729 OPTIONAL PART: 401-8065-001 V55566 USED ON: 617-3716-001 617-3716-002 617-3716-006 617-3715-005	002004 006102 107107 121503 904949 952999	1
124	401-8065-001	...HANDLE- SUPPLIER CODE: V55566 OPTIONAL PART: G2525-4 V04729 USED ON: 617-3716-001 617-3716-002 617-3716-006 617-3715-005	002004 006102 107107 121503 904949 952999	1

MISSING ITEM NUMBERS NOT APPLICABLE

– ITEM NOT ILLUSTRATED

BOEING PROPRIETARY - Copyright © - Unpublished Work - See title page for details.

FIG ITEM	PART NUMBER	1 2 3 4 5 6 7 NOMENCLATURE	EFFECT FROM TO	UNITS PER ASSY
1				
		ATTACHING PARTS		
126	MS51957-45	...SCREW	002004 006102 107107 121503 904949 952999	2
128	MS35338-137	...WASHER	002004 006102 107107 121503 904949 952999	2
		-------*-------		
131	MS3181-22N	...CAP- USED ON: 617-3716-001 617-3716-002 617-3716-006 617-3715-005	002004 006102 107107 121503 904949 952999	1
131	MS3181-22NA	...CAP- USED ON: 617-4640-006	002004 006102 107107 121503 904949 952999	1
133	HLMP0454	...LAMP ASSY- SUPPLIER CODE: V28480 USED ON: 617-4640-006	002004 006102 107107 121503 904949 952999	1
136	HLMP0454	...LAMP ASSY- SUPPLIER CODE: V28480 OPTIONAL PART: 5082-4587 V50434 USED ON: 617-3716-001 617-3716-002 617-3716-006 617-3715-005	002004 006102 107107 121503 904949 952999	1

MISSING ITEM NUMBERS NOT APPLICABLE

– ITEM NOT ILLUSTRATED

BOEING PROPRIETARY - Copyright © - Unpublished Work - See title page for details.

	FIG ITEM	PART NUMBER	1 2 3 4 5 6 7 NOMENCLATURE	EFFECT FROM TO	UNITS PER ASSY
	1				
	136	5082-4587	...LAMP ASSY-	002004	1
			SUPPLIER CODE:	006102	
			V50434	107107	
			OPTIONAL PART:	121503	
			HLMP0454	904949	
			V50434	952999	
			USED ON:		
			617-3716-001		
			617-3716-002		
			617-3716-006		
			617-3715-005		
R	155	980-4700-034	.RECORDER ASSY-FLIGHT	002004	1
R			SUPPLIER CODE:	006100	
R			V97896		
R			ELECTRICAL EQUIP NUMBER:		
R			M00200		
R			COMPONENT MAINT MANUAL REF:		
R			31-30-40		
R			OPTIONAL PART:		
R			980-4100DXUN		
R			FOR ADDITIONAL DETAILS SEE:		
R			31-31-02-01		
R	155	980-4700-035	.RECORDER ASSY-FLIGHT	107107	1
R			SUPPLIER CODE:	121503	
R			V97896	904949	
R			ELECTRICAL EQUIP NUMBER:	952999	
R			M00200		
R			COMPONENT MAINT MANUAL REF:		
R			31-30-40		
R			QUALIFIED I/W DATA:		
R			980-4700-042 I/W		
R			980-4700-035 EXCEPT		
R			IMPLEMENTATION OF THE		
R			256 WORD PER SECOND		
R			DATAFRAME OPTION		
R			REQUIRES MINOR CHANGE TO		
R			AIRCRAFT WIRING (PIN 17		
R			& 18 OPEN OR GROUNDED)		
R			MAY BE REQ'D		
R			FOR ADDITIONAL DETAILS SEE:		
R			31-31-02-01		

MISSING ITEM NUMBERS NOT APPLICABLE

– ITEM NOT ILLUSTRATED

BOEING PROPRIETARY - Copyright © - Unpublished Work - See title page for details.

FIG ITEM	PART NUMBER	1 2 3 4 5 6 7 NOMENCLATURE	EFFECT FROM TO	UNITS PER ASSY
1				
155	980-4700-042	.RECORDER ASSY-FLIGHT SUPPLIER CODE: V97896 FUNCTIONAL DESCRIPTION: RECORDS SELECTED PARAMETERS FROM VARIOUS AIRPLANE SYSTEMS AND SENSORS USING SOLID-STATE MEMORY. ELECTRICAL EQUIP NUMBER: M00200 COMPONENT MAINT MANUAL REF: 31-30-40 QUALIFIED I/W DATA: 980-4700-042 I/W 980-4700-035 EXCEPT IMPLEMENTATION OF THE 256 WORD PER SECOND DATAFRAME OPTION REQUIRES MINOR CHANGE TO AIRCRAFT WIRING (PIN 17 & 18 OPEN OR GROUNDED) MAY BE REQ'D. FOR ADDITIONAL DETAILS SEE: 31-31-02-01	103106 108120	1

MISSING ITEM NUMBERS NOT APPLICABLE

— ITEM NOT ILLUSTRATED

BOEING PROPRIETARY - Copyright © - Unpublished Work - See title page for details.

	FIG ITEM	PART NUMBER	1 2 3 4 5 6 7 NOMENCLATURE	EFFECT FROM TO	UNITS PER ASSY
	1				
R	155	980-4700-042	.RECORDER ASSY-FLIGHT	101102	1
R			SUPPLIER CODE:	108120	
R			V97896	504903	
R			FUNCTIONAL DESCRIPTION:		
R			RECORDS SELECTED		
R			PARAMETERS FROM VARIOUS		
R			AIRPLANE SYSTEMS AND		
R			SENSORS USING		
R			SOLID-STATE MEMORY.		
R			ELECTRICAL EQUIP NUMBER:		
R			M00200		
R			COMPONENT MAINT MANUAL REF:		
R			31-30-40		
R			QUALIFIED I/W DATA:		
R			980-4700-042 I/W		
R			980-4700-035 EXCEPT		
R			IMPLEMENTATION OF THE		
R			256 WORD PER SECOND		
R			DATAFRAME OPTION		
R			REQUIRES MINOR CHANGE TO		
R			AIRCRAFT WIRING (PIN 17		
R			& 18 OPEN OR GROUNDED)		
R			MAY BE REQ'D.		
R			FOR ADDITIONAL DETAILS SEE:		
R			31-31-02-01		
	156	402-6061-001	..LABEL-WARNING	002004	1
			SUPPLIER CODE:	006949	
			V97896	952999	
			USED ON:		
			980-4700-001		
			980-4700-003		
			980-4700-033		
			980-4700-034		
			980-4700-035		
			980-4700-042		
	157	402-6061-002	..LABEL-WARNING	002004	1
			SUPPLIER CODE:	006949	
			V97896	952999	
			USED ON:		
			980-4700-001		
			980-4700-003		
			980-4700-033		
			980-4700-034		
			980-4700-035		
			980-4700-042		

MISSING ITEM NUMBERS NOT APPLICABLE

— ITEM NOT ILLUSTRATED

BOEING PROPRIETARY - Copyright © - Unpublished Work - See title page for details.

FIG ITEM	PART NUMBER	1 2 3 4 5 6 7 NOMENCLATURE	EFFECT FROM TO	UNITS PER ASSY
1				
158	402-6061-003	..LABEL-WARNING	002004	1
		SUPPLIER CODE:	006949	
		V97896	952999	
		USED ON:		
		980-4700-001		
		980-4700-003		
		980-4700-033		
		980-4700-034		
		980-4700-035		
		980-4700-042		
159	643-0676-001	..LABEL-IDENT	002004	1
		SUPPLIER CODE:	006100	
		V97896	107107	
		CONFIG CHG DATA FROM A CMM:	121503	
		REPLD BY 643-0676-002	904949	
		MISCELLANEOUS DATA:	952999	
		SN 201-220		
		USED ON:		
		980-4700-001		
		980-4700-003		
		980-4700-034		
		980-4700-035		
159	643-0676-002	..LABEL-IDENT	002004	1
		SUPPLIER CODE:	006100	
		V97896	107107	
		CONFIG CHG DATA FROM A CMM:	121503	
		REPLS 643-0676-001	904949	
		REPLD BY 643-0676-007	952999	
		USED ON:		
		980-4700-001		
		980-4700-003		
		980-4700-034		
		980-4700-035		
159	643-0676-007	..LABEL-IDENT	002004	1
		SUPPLIER CODE:	006100	
		V97896	107107	
		CONFIG CHG DATA FROM A CMM:	121503	
		REPLS 643-0676-002	904949	
		MISCELLANEOUS DATA:	952999	
		SN 2566-4999		
		USED ON:		
		980-4700-001		
		980-4700-003		
		980-4700-034		
		980-4700-035		

MISSING ITEM NUMBERS NOT APPLICABLE

– ITEM NOT ILLUSTRATED

BOEING PROPRIETARY - Copyright © - Unpublished Work - See title page for details.

FIG ITEM	PART NUMBER	1 2 3 4 5 6 7 NOMENCLATURE	EFFECT FROM TO	UNITS PER ASSY
1				
159	643-0676-013	..LABEL-IDENT SUPPLIER CODE: V97896 MISCELLANEOUS DATA: SN 201-2565 USED ON: 980-4700-001 980-4700-003 980-4700-034 980-4700-035	002004 006100 107107 121503 904949 952999	1
159	643-0676-004	..LABEL-IDENT SUPPLIER CODE: V97896 CONFIG CHG DATA FROM A CMM: REPLD BY 643-0676-006 USED ON: 980-4700-042	101106 108120 504903	1
159	643-0676-006	..LABEL-IDENT SUPPLIER CODE: V97896 CONFIG CHG DATA FROM A CMM: REPLS 643-0676-004 MISCELLANEOUS DATA: SN 2566-4999 USED ON: 980-4700-042	101106 108120 504903	1
159	643-0676-012	..LABEL-IDENT SUPPLIER CODE: V97896 MISCELLANEOUS DATA: SN 201-2565 USED ON: 980-4700-042	101106 108120 504903	1
160	643-0683-001	..LABEL-FRONT PNL SUPPLIER CODE: V97896 CONFIG CHG DATA FROM A CMM: REPLD BY 643-0683-002 MISCELLANEOUS DATA: SN 201-220 USED ON: 980-4700-001 980-4700-003 980-4700-033 980-4700-034 980-4700-035 980-4700-042	002004 006949 952999	1

MISSING ITEM NUMBERS NOT APPLICABLE

– ITEM NOT ILLUSTRATED

BOEING PROPRIETARY - Copyright © - Unpublished Work - See title page for details.

FIG ITEM	PART NUMBER	1 2 3 4 5 6 7 NOMENCLATURE	EFFECT FROM TO	UNITS PER ASSY
1				
160	643-0683-002	..LABEL-FRONT PNL SUPPLIER CODE: V97896 CONFIG CHG DATA FROM A CMM: REPLS 643-0683-001 USED ON: 980-4700-001 980-4700-003 980-4700-033 980-4700-034 980-4700-035 980-4700-042	011106 108120 504903	1
161	643-0676-011	..LABEL-IDENT SUPPLIER CODE: V97896 USED ON: 980-4700-001 980-4700-003 980-4700-034 980-4700-035	002004 006100 107107 121503 904949 952999	1
161	643-0676-011	..LABEL-IDENT SUPPLIER CODE: V97896 USED ON: 980-4700-001 980-4700-003 980-4700-034 980-4700-035	101106 108120 504903	1
161	620-1864-002	..PLATE-IDENT SUPPLIER CODE: V97896 USED ON: 980-4700-001 980-4700-003 980-4700-034 980-4700-035	002004 006100 107107 121503 904949 952999	1
162	402-6061-007	..LABEL-PATENT SUPPLIER CODE: V97896 USED ON: 980-4700-001 980-4700-003 980-4700-033 980-4700-034 980-4700-035 980-4700-042	002004 006949 952999	1

MISSING ITEM NUMBERS NOT APPLICABLE

– ITEM NOT ILLUSTRATED

BOEING PROPRIETARY - Copyright © - Unpublished Work - See title page for details.

FIG ITEM	PART NUMBER	1 2 3 4 5 6 7 NOMENCLATURE	EFFECT FROM TO	UNITS PER ASSY
1				
163	402-6061-004	..LABEL-WARNING SUPPLIER CODE: V97896 USED ON: 980-4700-001 980-4700-003 980-4700-033 980-4700-034 980-4700-035 980-4700-042	002004 006949 952999	1
164	402-6061-005	..LABEL-WARNING SUPPLIER CODE: V97896 USED ON: 980-4700-001 980-4700-003 980-4700-033 980-4700-034 980-4700-035 980-4700-042	002004 006949 952999	1
165	620-1848-027	..PLATE-IDENT SUPPLIER CODE: V97896 USED ON: 980-4700-001 980-4700-003 980-4700-033 980-4700-034 980-4700-035 980-4700-042	002004 006949 952999	1
165A	620-1864-007	..LABEL-CUSTOMER PN SUPPLIER CODE: V97896 USED ON: 980-4700-001 980-4700-003 980-4700-033 980-4700-034 980-4700-035 980-4700-042	002004 006949 952999	1

MISSING ITEM NUMBERS NOT APPLICABLE

– ITEM NOT ILLUSTRATED

BOEING PROPRIETARY - Copyright © - Unpublished Work - See title page for details.

FIG ITEM	PART NUMBER	1 2 3 4 5 6 7 NOMENCLATURE	EFFECT FROM TO	UNITS PER ASSY
1				
166	402-6036-001	..LABEL-ESD	002004	1
		SUPPLIER CODE:	006949	
		V97896	952999	
		USED ON:		
		980-4700-001		
		980-4700-003		
		980-4700-033		
		980-4700-034		
		980-4700-035		
		980-4700-042		
167	405-0255-001	..HOOK-	002004	2
		SUPPLIER CODE:	006949	
		V97896	952999	
		USED ON:		
		980-4700-001		
		980-4700-003		
		980-4700-033		
		980-4700-034		
		980-4700-035		
		980-4700-042		
		ATTACHING PARTS		
168	MS24693S25	..SCREW-	002004	4
		CONFIG CHG DATA FROM A CMM:	006949	
		SUPSD BY MS24693S29	952999	
168	MS24693S29	..SCREW-	002004	4
		CONFIG CHG DATA FROM A CMM:	006949	
		SUPERSEDES MS24693S25	952999	
		REPLD BY MS24693C29		
168	MS24693C29	..SCREW-	002004	4
		CONFIG CHG DATA FROM A CMM:	006949	
		REPLS MS24693S29	952999	
		-------*-------		
174C	620-1864-004	..LABEL-IDENT, TSO-C124A	002004	1
		SUPPLIER CODE:	006949	
		V97896	952999	
		USED ON:		
		980-4700-001		
		980-4700-003		
		980-4700-033		
		980-4700-034		
		980-4700-035		
		980-4700-042		

MISSING ITEM NUMBERS NOT APPLICABLE

– ITEM NOT ILLUSTRATED

BOEING PROPRIETARY - Copyright © - Unpublished Work - See title page for details.

	FIG ITEM	PART NUMBER	1 2 3 4 5 6 7 NOMENCLATURE	EFFECT FROM TO	UNITS PER ASSY
	1				
	174D	620-1864-006	..LABEL-IDENT, TSO-C124	002004	1
			SUPPLIER CODE:	006949	
			V97896	952999	
			USED ON:		
			980-4700-001		
			980-4700-003		
			980-4700-033		
			980-4700-034		
			980-4700-035		
			980-4700-042		
R	175	2100-4043-00	.RECORDER-FLIGHT	950951	1
R			SUPPLIER CODE:		
R			V06141		
R			FUNCTIONAL DESCRIPTION:		
R			RECORDS SELECTED		
R			PARAMETERS FROM VARIOUS		
R			AIRPLANE SYSTEMS AND		
R			SENSORS USING		
R			SOLID-STATE MEMORY.		
R			ELECTRICAL EQUIP NUMBER:		
R			M00200		
R			COMPONENT MAINT MANUAL REF:		
R			23-70-01		
R	176	17M800-251	.RECORDER ASSY-FLIGHT	950951	1
R			SUPPLIER CODE:		
R			V06141		
R			ELECTRICAL EQUIP NUMBER:		
R			M00200		
R			COMPONENT MAINT MANUAL REF:		
R			31-30-01		
R			QUALIFIED I/W DATA:		
R			980-4100DXUS,		
R			980-4100DXUN, 17M800-251		
R			AND 17M800-261 ARE ALL		
R			ERCHANGEABLE SUBJECT TO		
R			CUSTOMER PREFERENCE		
R			OPTIONAL PART:		
R			17M800-261		
R			V06141		
R			17M900-274		
R			V06141		
R			17M903-274		
R			V06141		
R			FOR ADDITIONAL DETAILS SEE:		
R			31-31-02-01		

MISSING ITEM NUMBERS NOT APPLICABLE

– ITEM NOT ILLUSTRATED

BOEING PROPRIETARY - Copyright © - Unpublished Work - See title page for details.

	FIG ITEM	PART NUMBER	1 2 3 4 5 6 7 NOMENCLATURE	EFFECT FROM TO	UNITS PER ASSY
	1				
R	176	17M800-261	.RECORDER ASSY-FLIGHT	950951	1
R			SUPPLIER CODE:		
R			V06141		
R			ELECTRICAL EQUIP NUMBER:		
R			M00200		
R			COMPONENT MAINT MANUAL REF:		
R			31-30-01		
R			OPTIONAL PART:		
R			17M800-251		
R			V06141		
R			17M900-274		
R			V06141		
R			17M903-274		
R			V06141		
R			FOR ADDITIONAL DETAILS SEE:		
R			31-31-02-01		
R	176	17M900-274	.RECORDER-FLIGHT	950951	1
R			SUPPLIER CODE:		
R			V06141		
R			ELECTRICAL EQUIP NUMBER:		
R			M00200		
R			COMPONENT MAINT MANUAL REF:		
R			31-30-01		
R			OPTIONAL PART:		
R			17M800-251		
R			V06141		
R			17M903-274		
R			V06141		
R			17M800-261		
R			V06141		
R			FOR ADDITIONAL DETAILS SEE:		
R			31-31-02-01		
R	176	17M903-274	.RECORDER-FLIGHT	950951	1
R			SUPPLIER CODE:		
R			V06141		
R			ELECTRICAL EQUIP NUMBER:		
R			M00200		
R			COMPONENT MAINT MANUAL REF:		
R			31-30-01		
R			OPTIONAL PART:		
R			17M800-251		
R			V06141		
R			17M900-274		
R			V06141		
R			17M800-261		
R			V06141		
R			FOR ADDITIONAL DETAILS SEE:		
R			31-31-02-01		

MISSING ITEM NUMBERS NOT APPLICABLE

— ITEM NOT ILLUSTRATED

BOEING PROPRIETARY - Copyright © - Unpublished Work - See title page for details.

FIG ITEM	PART NUMBER	1 2 3 4 5 6 7 NOMENCLATURE	EFFECT FROM TO	UNITS PER ASSY
1				
177	9300449	..DECAL-	950951	1
		SUPPLIER CODE:		
		V06141		
178	17D17-0618	..PLATE-REV	950951	1
		SUPPLIER CODE:		
		V06141		
179	17D170262	..PLATE-MOD.	950951	1
		SUPPLIER CODE:		
		V06141		
180	HDH1	..HOOK-	950951	2
		SUPPLIER CODE:		
		V94867		
		ATTACHING PARTS		
181	938EP88X3	..SCREW-	950951	4
		SUPPLIER CODE:		
		V06141		
		-------*-------		
182	93919140	..CAP-	950951	1
		SUPPLIER CODE:		
		V06141		
		ATTACHING PARTS		
183	938EP63X3	..SCREW-	950951	1
		SUPPLIER CODE:		
		V06141		
		-------*-------		
184	9300177	..HANDLE-	950951	1
		SUPPLIER CODE:		
		V06141		
		ATTACHING PARTS		
185	938ES108R5	..SCREW-	950951	2
		SUPPLIER CODE:		
		V06141		
		-------*-------		
- 200	286N2651-002	WIRE BUNDLE ASSY-	107107	RF
			121503	
			904949	
			952999	
- 200	286N2651-007	WIRE BUNDLE ASSY-	002004	RF
			006100	
			950951	
- 201	286N2651-311	WIRE BUNDLE ASSY-	108120	RF
- 201	286N2651-315	WIRE BUNDLE ASSY	504903	RF
- 201	286N2651-316	WIRE BUNDLE ASSY	101102	RF
- 203	286N5931-701	WIRE BUNDLE ASSY	103106	RF

MISSING ITEM NUMBERS NOT APPLICABLE

- ITEM NOT ILLUSTRATED

BOEING PROPRIETARY - Copyright © - Unpublished Work - See title page for details.

FIG ITEM	PART NUMBER	1 2 3 4 5 6 7 NOMENCLATURE	EFFECT FROM TO	UNITS PER ASSY
1				
205	BCREF2233	.PLUG-	002004	1
		SUPPLIER CODE:	006100	
		V71468	107120	
		OVERLENGTH PART NUMBER:	504903	
		DPX2MB57S57S33-0001	950951	
		ELECTRICAL EQUIP NUMBER:		
		D00013		
		WIRING DIAGRAM REF:		
		313101		
205	BCREF103935	.RECEPTACLE-	101106	1
		SUPPLIER CODE:	121503	
		V71468	904949	
		OVERLENGTH PART NUMBER:	952999	
		DPX2MB57S00S33-0001		
		ELECTRICAL EQUIP NUMBER:		
		D00013		
		WIRING DIAGRAM REF:		
		313101		
		313111		
		313112		
- 300	284N1469-401	SUPPORT INSTL-FLIGHT	108120	RF
		RECORDER		
		(INSTRUMENTS ONLY)		
		FOR NHA/OTHER SYS DET SEE:		
		24-00-58-05A		
- 300	MODREF23321	SUPPORT INSTL-FLIGHT	103106	RF
		RECORDER		
		(INSTRUMENTS ONLY)		
		MODULE NUMBER:		
		284N1469-402 REV B		
		FOR OTHER SYS DETAILS SEE:		
		23-71-01-01		
305	BAC27NEL0291	.DECAL-	103106	1
		PLACARD CONTENT:	108120	
		D13		
310	BAC27NEL0293	.DECAL-	103106	1
		PLACARD CONTENT:	108120	
		M200 RECORDER DIGITAL		
		FLIGHT DATA		

MISSING ITEM NUMBERS NOT APPLICABLE

- ITEM NOT ILLUSTRATED

BOEING PROPRIETARY - Copyright © - Unpublished Work - See title page for details.

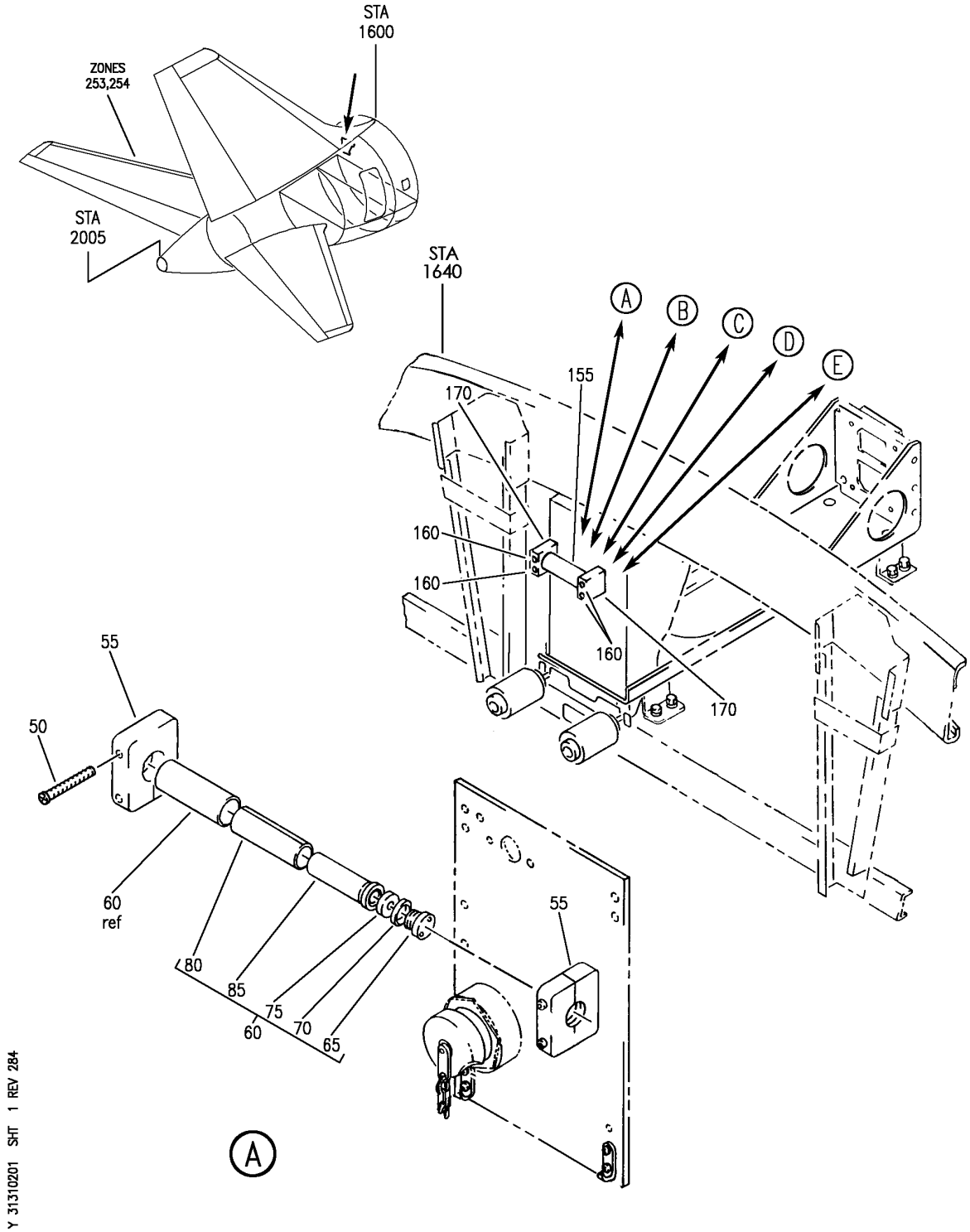

RECORDER ASSY-UNIVERSAL FLIGHT DATA (UNDERWATER LOCATOR BEACON ONLY (CUSTOMER FURNISHED))
FIGURE 1 (SHEET 1)

BOEING PROPRIETARY - Copyright © - Unpublished Work - See title page for details.

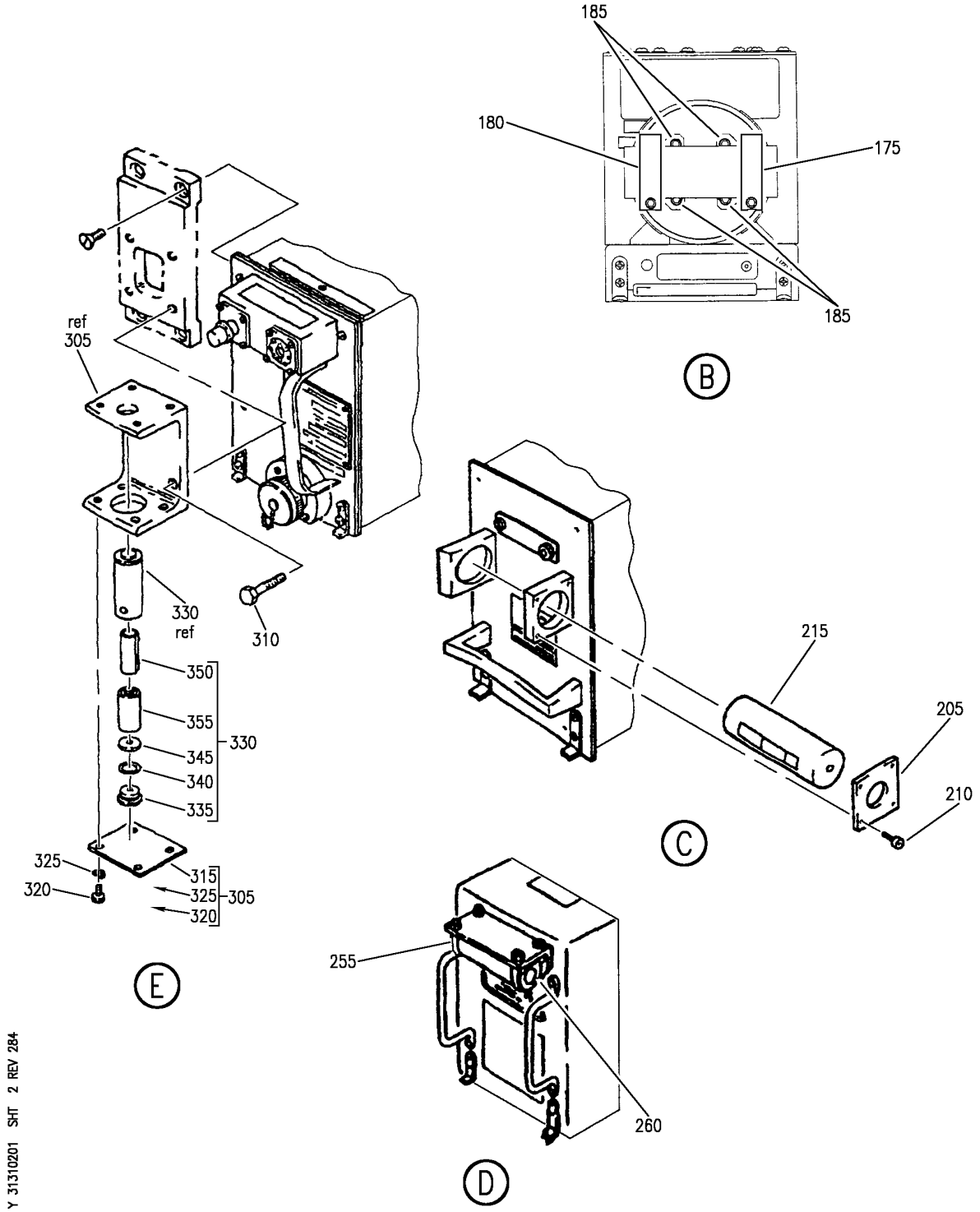

RECORDER ASSY-UNIVERSAL FLIGHT DATA (UNDERWATER LOCATOR BEACON ONLY (CUSTOMER FURNISHED))
FIGURE 1 (SHEET 2)

BOEING PROPRIETARY - Copyright © - Unpublished Work - See title page for details.

FIG ITEM	PART NUMBER	1 2 3 4 5 6 7 NOMENCLATURE	EFFECT FROM TO	UNITS PER ASSY
1		RECORDER ASSY-UNIVERSAL FLIGHT DATA (UNDERWATER LOCATOR BEACON ONLY (CUSTOMER FURNISHED))	002004 006999	
- 1	980-4100DXUN	RECORDER ASSY-UNIVERSAL FLIGHT DATA (UNDERWATER LOCATOR BEACON ONLY (CUSTOMER FUNISHED)) SUPPLIER CODE: V97896 MISCELLANEOUS DATA: 980-4100BXUN (SFE) AND 980-4100DXUN (BFE) ARE THE SAME FLIGHT RECORDER. P/N VARIES WHETHER IT IS BFE OR SFE. 980-4100BXUN IS FULLY I/W 980-4100DXUN. ELECTRICAL EQUIP NUMBER: M00200 COMPONENT MAINT MANUAL REF: 31-30-32 OPTIONAL PART: 980-4700-034 V97896 FOR NHA/ADDITIONAL DET SEE: 31-31-01-01	002004 006100 107120 904949 952999	RF
- 1	980-4100DXUN	RECORDER ASSY-UNIVERSAL FLIGHT DATA (UNDERWATER LOCATOR BEACON ONLY (CUSTOMER FUNISHED)) SUPPLIER CODE: V97896 MISCELLANEOUS DATA: 980-4100BXUN (SFE) AND 980-4100DXUN (BFE) ARE THE SAME FLIGHT RECORDER. P/N VARIES WHETHER IT IS BFE OR SFE. 980-4100BXUN IS FULLY I/W 980-4100DXUN. ELECTRICAL EQUIP NUMBER: M00200 COMPONENT MAINT MANUAL REF: 31-30-33 FOR NHA/ADDITIONAL DET SEE: 31-31-01-01	121503	RF

MISSING ITEM NUMBERS NOT APPLICABLE

- ITEM NOT ILLUSTRATED

BOEING PROPRIETARY - Copyright © - Unpublished Work - See title page for details.

FIG ITEM	PART NUMBER	1 2 3 4 5 6 7 NOMENCLATURE	EFFECT FROM TO	UNITS PER ASSY
1				
50	631-0401-001	.SCREW-SOCKET HEAD	002004	4
		SUPPLIER CODE:	006100	
		V97896	107503	
		OPTIONAL PART:	904949	
		NAS1352C08-20	952999	
50	NAS1352C08-20	.SCREW-	002004	4
		OPTIONAL PART:	006100	
		631-0401-001	107503	
		V97896	904949	
			952999	
55	654-0146-001	.MOUNT-	002004	2
		SUPPLIER CODE:	006100	
		V97896	107503	
			904949	
			952999	
60	N15F210B	.LOCATING DEVICE ASSY-	002004	1
		UNDERWATER	006100	
		SUPPLIER CODE:	107503	
		V94970	904949	
		OPTIONAL PART:	952999	
		DK100		
		V94970		
		ELP362D		
		V4U270		
		DK120		
		V94970		
60	DK100	.BEACON-UNDERWATER	002004	1
		SUPPLIER CODE:	006100	
		V94970	107503	
		OPTIONAL PART:	904949	
		ELP362D	952999	
		V4U270		
		ELP362DS		
		V4U270		
		DK120		
		V94970		
		OPTIONAL PART:		
		ELP362D		
		V4U270		
		DK120		
		V94970		
		N15F210B		
		V94970		
		316-6004-003		
		V97896		

MISSING ITEM NUMBERS NOT APPLICABLE

– ITEM NOT ILLUSTRATED

BOEING PROPRIETARY - Copyright © - Unpublished Work - See title page for details.

FIG ITEM	PART NUMBER	1 2 3 4 5 6 7 NOMENCLATURE	EFFECT FROM TO	UNITS PER ASSY
1				
60	ELP362D	.BEACON-EMER LOCATOR	002004	1
		SUPPLIER CODE:	006100	
		V4U270	107503	
		OPTIONAL PART:	904949	
		DK100	952999	
		V94970		
		DK120		
		V94970		
		N15F210B		
		V94970		
		ELP362DS		
		V4U270		
		316-6004-006		
		V97896		
60	DK120	.BEACON-	002004	1
		UNDERWATER	006100	
		SUPPLIER CODE:	107503	
		V94970	904949	
		OPTIONAL PART:	952999	
		ELP362D		
		V4U270		
		DK100		
		V94970		
		OPTIONAL PART:		
		N15F210B		
		V94970		
		DK100		
		V94970		
		ELP362D		
		V4U270		
		316-6004-005		
		V97896		
60	ELP362DS	.BEACON-UNDERWATER	002004	1
		SUPPLIER CODE:	006100	
		V26858	107503	
		OPTIONAL PART:	904949	
		DK100	952999	
		V94970		
		DK120		
		V94970		
		ELP362D		
		V4U270		
		316-6004-004		
		V97896		

MISSING ITEM NUMBERS NOT APPLICABLE

— ITEM NOT ILLUSTRATED

BOEING PROPRIETARY - Copyright © - Unpublished Work - See title page for details.

FIG ITEM	PART NUMBER	1 2 3 4 5 6 7 NOMENCLATURE	EFFECT FROM TO	UNITS PER ASSY
1				
60	316-6004-003	.BEACON-UNDERWATER	002004	1
		SUPPLIER CODE:	006100	
		V97896	107503	
		OPTIONAL PART:	904949	
		DK100	952999	
		V94970		
		DK120		
		V94970		
		ELP362D		
		V4U270		
		ELP362DS		
		V26858		
60	316-6004-004	.BEACON-UNDERWATER	002004	1
		SUPPLIER CODE:	006100	
		V97896	107503	
		OPTIONAL PART:	904949	
		DK100	952999	
		V94970		
		DK120		
		V94970		
		ELP362D		
		V4U270		
		ELP362DS		
		V26858		
60	316-6004-005	.BEACON-UNDERWATER	002004	1
		SUPPLIER CODE:	006100	
		V97896	107503	
		OPTIONAL PART:	904949	
		DK100	952999	
		V94970		
		DK120		
		V94970		
		ELP362D		
		V4U270		
		ELP362DS		
		V26858		
60	316-6004-006	.BEACON-UNDERWATER	002004	1
		SUPPLIER CODE:	006100	
		V97896	107503	
		OPTIONAL PART:	904949	
		DK100	952999	
		V94970		
		DK120		
		V94970		
		ELP362D		
		V4U270		
		ELP362DS		
		V26858		

MISSING ITEM NUMBERS NOT APPLICABLE

— ITEM NOT ILLUSTRATED

BOEING PROPRIETARY - Copyright © - Unpublished Work - See title page for details.

FIG ITEM	PART NUMBER	1 2 3 4 5 6 7 NOMENCLATURE	EFFECT FROM TO	UNITS PER ASSY
1				
65	810-423	..CAP-END SUPPLIER CODE: V94970	002004 006100 107503 904949 952999	1
70	810-342	..PACKING- SUPPLIER CODE: V94970	002004 006100 107503 904949 952999	1
75	810-419	..CUSHION-SHOCK SUPPLIER CODE: V94970	002004 006100 107503 904949 952999	1
80	810-371A	..CUSHION-SHOCK SUPPLIER CODE: V94970	002004 006100 107503 904949 952999	1
85	810-418A	..BATTERY- SUPPLIER CODE: V94970	002004 006100 107503 904949 952999	1
85	810-2007	..BATTERY- SUPPLIER CODE: V94970 CONFIG CHG DATA FROM A CMM: REPLACED BY 810-2007 USED ON: DK120	002004 006100 107503 904949 952999	1
85	810-2007K	..BATTERY KIT- SUPPLIER CODE: V94970 CONFIG CHG DATA FROM A CMM: REPLACES 810-2007 USED ON: DK120	002004 006100 107503 904949 952999	1

MISSING ITEM NUMBERS NOT APPLICABLE

– ITEM NOT ILLUSTRATED

BOEING PROPRIETARY - Copyright © - Unpublished Work - See title page for details.

FIG ITEM	PART NUMBER	1 2 3 4 5 6 7 NOMENCLATURE	EFFECT FROM TO	UNITS PER ASSY
1				
- 150	980-4700-034	RECORDER ASSY-UNIVERSAL FLIGHT DATA (UNDERWATER LOCATOR BEACON ONLY (CUSTOMER FUNISHED)) SUPPLIER CODE: V97896 ELECTRICAL EQUIP NUMBER: M00200 COMPONENT MAINT MANUAL REF: 31-30-40 OPTIONAL PART: 980-4100DXUN V97896 FOR NHA/ADDITIONAL DET SEE: 31-31-01-01	002004 006100	RF
- 150	980-4700-035	RECORDER ASSY-UNIVERSAL FLIGHT DATA (UNDERWATER LOCATOR BEACON ONLY (CUSTOMER FUNISHED)) SUPPLIER CODE: V97896 ELECTRICAL EQUIP NUMBER: M00200 COMPONENT MAINT MANUAL REF: 31-30-40 QUALIFIED I/W DATA: 980-4700-042 I/W 980-4700-035 EXCEPT IMPLEMENTATION OF THE 256 WORD PER SECOND DATAFRAME OPTION REQUIRES MINOR CHANGE TO AIRCRAFT WIRING (PIN 17 & 18 OPEN OR GROUNDED) MAY BE REQ'D. PRE AIRLINE MOD: M0 72L35 VTWA FOR NHA/ADDITIONAL DET SEE: 31-31-01-01	107107 121503 904949 952999	RF

MISSING ITEM NUMBERS NOT APPLICABLE

- ITEM NOT ILLUSTRATED

BOEING PROPRIETARY - Copyright © - Unpublished Work - See title page for details.

FIG ITEM	PART NUMBER	1 2 3 4 5 6 7 NOMENCLATURE	EFFECT FROM TO	UNITS PER ASSY
1				
- 150	980-4700-042	RECORDER ASSY-UNIVERSAL FLIGHT DATA (UNDERWATER LOCATOR BEACON ONLY) SUPPLIER CODE: V97896 FUNCTIONAL DESCRIPTION: RECORDS SELECTED PARAMETERS FROM VARIOUS AIRPLANE SYSTEMS AND SENSORS USING SOLID-STATE MEMORY. ELECTRICAL EQUIP NUMBER: M00200 COMPONENT MAINT MANUAL REF: 31-30-40 QUALIFIED I/W DATA: 980-4700-042 I/W 980-4700-035 EXCEPT IMPLEMENTATION OF THE 256 WORD PER SECOND DATAFRAME OPTION REQUIRES MINOR CHANGE TO AIRCRAFT WIRING (PIN 17 & 18 OPEN OR GROUNDED) MAY BE REQ'D. FOR NHA/ADDITIONAL DET SEE: 31-31-01-01	101106 108120 504903	RF

MISSING ITEM NUMBERS NOT APPLICABLE

– ITEM NOT ILLUSTRATED

BOEING PROPRIETARY - Copyright © - Unpublished Work - See title page for details.

FIG ITEM	PART NUMBER	1 2 3 4 5 6 7 NOMENCLATURE	EFFECT FROM TO	UNITS PER ASSY
1				
155	DK100	.BEACON-UNDERWATER	002004	1
		SUPPLIER CODE:	006949	
		V94970	952999	
		OPTIONAL PART:		
		ELP362D		
		V4U270		
		ELP362DS		
		V4U270		
		DK120		
		V94970		
		OPTIONAL PART:		
		ELP362D		
		V4U270		
		DK120		
		V94970		
		ELP362DS		
		V26858		
		316-6004-003		
		V97896		
		316-6004-004		
		V97896		
		316-6004-005		
		V97896		
		316-6004-006		
		V97896		
155	ELP362D	.BEACON-UNDERWATER	002004	1
		SUPPLIER CODE:	006949	
		V4U270	952999	
		OPTIONAL PART:		
		DK100		
		V94970		
		DK120		
		V94970		
		ELP362DS		
		V26858		
		316-6004-003		
		V97896		
		316-6004-004		
		V97896		
		316-6004-005		
		V97896		
		316-6004-006		
		V97896		

MISSING ITEM NUMBERS NOT APPLICABLE

— ITEM NOT ILLUSTRATED

BOEING PROPRIETARY - Copyright © - Unpublished Work - See title page for details.

FIG ITEM	PART NUMBER	1 2 3 4 5 6 7 NOMENCLATURE	EFFECT FROM TO	UNITS PER ASSY
1				
155	DK120	.BEACON-UNDERWATER	002004	1
		SUPPLIER CODE:	006949	
		V94970	952999	
		OPTIONAL PART:		
		ELP362D		
		V4U270		
		DK100		
		V94970		
		OPTIONAL PART:		
		ELP362D		
		V4U270		
		DK100		
		V94970		
		ELP362DS		
		V26858		
		316-6004-003		
		V97896		
		316-6004-004		
		V97896		
		316-6004-005		
		V97896		
		316-6004-006		
		V97896		
155	ELP362DS	.BEACON-UNDERWATER	002004	1
		SUPPLIER CODE:	006949	
		V26858	952999	
		OPTIONAL PART:		
		DK100		
		V94970		
		DK120		
		V94970		
		ELP362D		
		V4U270		
		316-6004-003		
		V97896		
		316-6004-004		
		V97896		
		316-6004-005		
		V97896		
		316-6004-006		
		V97896		

MISSING ITEM NUMBERS NOT APPLICABLE

– ITEM NOT ILLUSTRATED

BOEING PROPRIETARY - Copyright © - Unpublished Work - See title page for details.

FIG ITEM	PART NUMBER	1 2 3 4 5 6 7 NOMENCLATURE	EFFECT FROM TO	UNITS PER ASSY
1				
155	316-6004-003	.BEACON-UNDERWATER	002004	1
		SUPPLIER CODE:	006949	
		V97896	952999	
		OPTIONAL PART:		
		DK100		
		V94970		
		DK120		
		V94970		
		ELP362D		
		V4U270		
		ELP362DS		
		V26858		
		316-6004-004		
		V97896		
		316-6004-005		
		V97896		
		316-6004-006		
		V97896		
155	316-6004-004	.BEACON-UNDERWATER	002004	1
		SUPPLIER CODE:	006949	
		V97896	952999	
		OPTIONAL PART:		
		DK100		
		V94970		
		DK120		
		V94970		
		ELP362D		
		V4U270		
		ELP362DS		
		V26858		
		316-6004-005		
		V97896		
		316-6004-006		
		V97896		
		316-6004-003		
		V97896		

MISSING ITEM NUMBERS NOT APPLICABLE

– ITEM NOT ILLUSTRATED

BOEING PROPRIETARY - Copyright © - Unpublished Work - See title page for details.

FIG ITEM	PART NUMBER	1 2 3 4 5 6 7 NOMENCLATURE	EFFECT FROM TO	UNITS PER ASSY
1				
155	316-6004-005	.BEACON-UNDERWATER	002004	1
		SUPPLIER CODE:	006949	
		V97896	952999	
		OPTIONAL PART:		
		DK100		
		V94970		
		DK120		
		V94970		
		ELP362D		
		V4U270		
		ELP362DS		
		V26858		
		316-6004-003		
		V97896		
		316-6004-004		
		V97896		
		316-6004-006		
		V97896		
155	316-6004-006	.BEACON-UNDERWATER	002004	1
		SUPPLIER CODE:	006949	
		V97896	952999	
		OPTIONAL PART:		
		DK100		
		V94970		
		DK120		
		V94970		
		ELP362D		
		V4U270		
		ELP362DS		
		V26858		
		316-6004-003		
		V97896		
		316-6004-004		
		V97896		
		316-6004-005		
		V97896		
		ATTACHING PARTS		
160	NAS1352C08-20	.SCREW-	002004	4
		OPTIONAL PART:	006949	
		PL54U82J20	952999	
		V03038		
		PAT63234SS1		
		V51506		

MISSING ITEM NUMBERS NOT APPLICABLE

– ITEM NOT ILLUSTRATED

BOEING PROPRIETARY - Copyright © - Unpublished Work - See title page for details.

FIG ITEM	PART NUMBER	1 2 3 4 5 6 7 NOMENCLATURE	EFFECT FROM TO	UNITS PER ASSY
1				
160	PL54U82J20	.SCREW-	002004	4
		SUPPLIER CODE:	006949	
		V03038	952999	
		OPTIONAL PART:		
		NAS1352C08-20		
		PAT63234SS1		
		V51506		
160	PAT63234SS1	.SCREW-	002004	4
		SUPPLIER CODE:	006949	
		V51506	952999	
		OPTIONAL PART:		
		NAS1352C08-20		
		PL54U82J20		
		V03038		
		-------*-------		
- 165	810-2007	..BATTERY-	002004	1
		SUPPLIER CODE:	006949	
		V94970	952999	
		USED ON:		
		DK120		
- 165	810-2007K	..BATTERY KIT-	002004	1
		SUPPLIER CODE:	006949	
		V94970	952999	
		USED ON:		
		DK120		
- 165	B362-06192-2	..BATTERY KIT-	002004	1
		SUPPLIER CODE:	006949	
		V26858	952999	
		USED ON:		
		ELP362D		
170	654-0146-001	.MOUNT-	002004	2
		SUPPLIER CODE:	006949	
		V97896	952999	
175	625-1132-006	.SUPPORT-	002004	1
		SUPPLIER CODE:	006949	
		V97896	952999	
180	625-1132-005	.SUPPORT-	002004	1
		SUPPLIER CODE:	006949	
		V97896	952999	
		ATTACHING PARTS		
185	PAT63216SS1	.SCREW-	002004	4
		SUPPLIER CODE:	006949	
		V51506	952999	
		OPTIONAL PART:		
		PL54U82J6		
		V03038		

MISSING ITEM NUMBERS NOT APPLICABLE

– ITEM NOT ILLUSTRATED

BOEING PROPRIETARY - Copyright © - Unpublished Work - See title page for details.

FIG ITEM	PART NUMBER	1 2 3 4 5 6 7 NOMENCLATURE	EFFECT FROM TO	UNITS PER ASSY
1				
185	PL54U82J6	.SCREW-	002004	4
		SUPPLIER CODE:	006949	
		V03038	952999	
		OPTIONAL PART:		
		PAT63216SS1		
		V51506		
		-------*-------		
- 250	10077A500-803	RECORDER-UNIVERSAL	101106	RF
		FLIGHT DATA (UNDERWATER	108120	
		LOCATOR BEACON ONLY	504903	
		(CUSTOMER FUNISHED))		
		SUPPLIER CODE:		
		V1NFM4		
		ELECTRICAL EQUIP NUMBER:		
		M00200		
		COMPONENT MAINT MANUAL REF:		
		31-30-04		
		FOR NHA/ADDITIONAL DET SEE:		
		31-31-01-01		
255	N30A20A	.MOUNTING KIT ASSY-MNGT	101106	1
		SUPPLIER CODE:	108120	
		V94970	504903	
260	DK100	.BEACON-UNDERWATER	101106	1
		SUPPLIER CODE:	108120	
		V94970	504903	
		OPTIONAL PART:		
		ELP362D		
		V4U270		
		ELP362DS		
		V4U270		
		DK120		
		V94970		
		OPTIONAL PART:		
		ELP362D		
		V4U270		
		DK120		
		V94970		

MISSING ITEM NUMBERS NOT APPLICABLE

- ITEM NOT ILLUSTRATED

BOEING PROPRIETARY - Copyright © - Unpublished Work - See title page for details.

FIG ITEM	PART NUMBER	1 2 3 4 5 6 7 NOMENCLATURE	EFFECT FROM TO	UNITS PER ASSY
1				
260	DK120	.BEACON-UNDERWATER SUPPLIER CODE: V94970 OPTIONAL PART: ELP362D V4U270 DK100 V94970 OPTIONAL PART: ELP362D V4U270 DK100 V94970	101106 108120 504903	1
260	ELP362D	.BEACON-UNDERWATER SUPPLIER CODE: V4U270 OPTIONAL PART: DK120 V94970 DK100 V94970	101106 108120 504903	1
- 300	17M800-251	RECORDER ASSY-UNIVERSAL FLIGHT DATA (UNDERWATER LOCATOR BEACON ONLY (CUSTOMER FUNISHED)) SUPPLIER CODE: V06141 ELECTRICAL EQUIP NUMBER: M00200 COMPONENT MAINT MANUAL REF: 31-30-01 QUALIFIED I/W DATA: 980-4100DXUS, 980-4100DXUN, 17M800-251 AND 17M800-261 ARE ALL ERCHANGEABLE SUBJECT TO CUSTOMER PREFERENCE OPTIONAL PART: 17M800-261 V06141 17M900-274 V06141 17M903-274 V06141 FOR NHA/ADDITIONAL DET SEE: 31-31-01-01	950951	RF

MISSING ITEM NUMBERS NOT APPLICABLE

- ITEM NOT ILLUSTRATED

BOEING PROPRIETARY - Copyright © - Unpublished Work - See title page for details.

FIG ITEM	PART NUMBER	1 2 3 4 5 6 7 NOMENCLATURE	EFFECT FROM TO	UNITS PER ASSY
1				
- 300	17M800-261	RECORDER ASSY-UNIVERSAL FLIGHT DATA (UNDERWATER LOCATOR BEACON ONLY (CUSTOMER FUNISHED)) SUPPLIER CODE: V06141 ELECTRICAL EQUIP NUMBER: M00200 COMPONENT MAINT MANUAL REF: 31-30-01 OPTIONAL PART: 17M800-251 V06141 17M900-274 V06141 17M903-274 V06141 FOR NHA/ADDITIONAL DET SEE: 31-31-01-01	950951	RF
- 300	17M900-274	RECORDER-UNIVERSAL FLIGHT DATA (UNDERWATER LOCATOR BEACON ONLY (CUSTOMER FUNISHED)) SUPPLIER CODE: V06141 ELECTRICAL EQUIP NUMBER: M00200 COMPONENT MAINT MANUAL REF: 31-30-01 OPTIONAL PART: 17M800-251 V06141 17M903-274 V06141 17M800-261 V06141 FOR NHA/ADDITIONAL DET SEE: 31-31-01-01	950951	RF

MISSING ITEM NUMBERS NOT APPLICABLE

- ITEM NOT ILLUSTRATED

BOEING PROPRIETARY - Copyright © - Unpublished Work - See title page for details.

FIG ITEM	PART NUMBER	1 2 3 4 5 6 7 NOMENCLATURE	EFFECT FROM TO	UNITS PER ASSY
1				
- 300	17M903-274	RECORDER-UNIVERSAL FLIGHT DATA (UNDERWATER LOCATOR BEACON ONLY (CUSTOMER FUNISHED)) SUPPLIER CODE: V06141 ELECTRICAL EQUIP NUMBER: M00200 COMPONENT MAINT MANUAL REF: 31-30-01 OPTIONAL PART: 17M800-251 V06141 17M900-274 V06141 17M800-261 V06141 FOR NHA/ADDITIONAL DET SEE: 31-31-01-01	950951	RF
305	810-376-1	.CRADLE ASSY- SUPPLIER CODE: V94970 ATTACHING PARTS	950951	1
310	AN4-6A	.BOLT -------*-------	950951	4
315	810-617	..PLATE-COVER SUPPLIER CODE: V94970 ATTACHING PARTS	950951	1
320	MS51959-43	..SCREW	950951	4
325	MS35336-17	..WASHER -------*-------	950951	4
330	N15F210B	.LOCATING DEVICE ASSY- SUPPLIER CODE: V94970	950951	1
335	810-423	..CAP-END SUPPLIER CODE: V94970	950951	1
340	810-342	..PACKING- SUPPLIER CODE: V94970	950951	1
345	810-419	..CUSHION-SHOCK SUPPLIER CODE: V94970	950951	1
350	810-371A	..CUSHION-SHOCK SUPPLIER CODE: V94970	950951	1

MISSING ITEM NUMBERS NOT APPLICABLE

- ITEM NOT ILLUSTRATED

BOEING PROPRIETARY - Copyright © - Unpublished Work - See title page for details.

FIG ITEM	PART NUMBER	1 2 3 4 5 6 7 NOMENCLATURE	EFFECT FROM TO	UNITS PER ASSY
1 355	810-418A	..BATTERY- SUPPLIER CODE: V94970	950951	1

MISSING ITEM NUMBERS NOT APPLICABLE

– ITEM NOT ILLUSTRATED

BOEING PROPRIETARY - Copyright © - Unpublished Work - See title page for details.

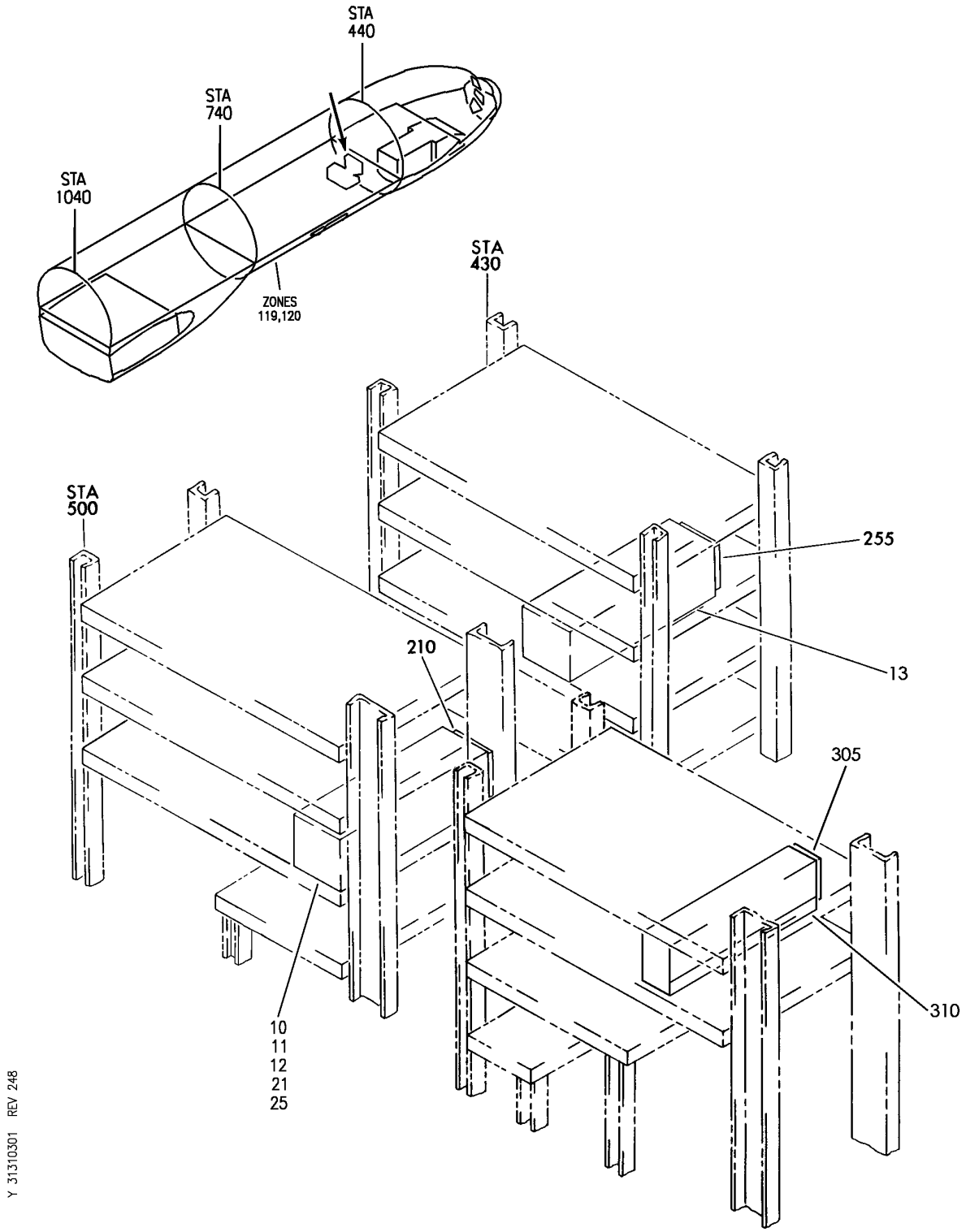

EQUIPMENT AND SOFTWARE INSTL-MAIN ELECTRONICS EQPT CTR (FLIGHT DATA RECORDER SYSTEM ONLY)
FIGURE 1

BOEING PROPRIETARY - Copyright © - Unpublished Work - See title page for details.

FIG ITEM	PART NUMBER	1 2 3 4 5 6 7 NOMENCLATURE	EFFECT FROM TO	UNITS PER ASSY
1		EQUIPMENT AND SOFTWARE INSTL-MAIN ELECTRONICS EQPT CTR (FLIGHT DATA RECORDER SYSTEM ONLY)	002004 006100 107107 121999	
- 2	284N1307-33	EQUIPMENT INSTL-MAIN ELECTRONICS EQPT CTR (FLIGHT DATA RECORDER SYSTEM ONLY) FOR NHA/OTHER SYS DET SEE: 24-00-58-01	107107	RF
- 2	284N1800-32	EQUIPMENT INSTL-MAIN ELECTRONICS EQPT CTR (FLIGHT DATA RECORDER SYSTEM ONLY) FOR NHA/OTHER SYS DET SEE: 24-00-58-01	952999	RF
- 4	284N1800-16	EQUIPMENT INSTL-MAIN ELECTRONICS EQPT CTR (FLIGHT DATA RECORDER SYSTEM ONLY) FOR NHA/OTHER SYS DET SEE: 24-00-58-01	121503 904949	RF
- 5	284N1800-34	EQUIPMENT INSTL-MAIN ELECTRONICS EQPT CTR (FLIGHT DATA RECORDER SYSTEM ONLY) FOR NHA/OTHER SYS DET SEE: 24-00-58-01	002004 006100	RF
- 5	284N1800-38	EQUIPMENT INSTL-MAIN ELECTRONICS EQPT CTR (FLIGHT DATA RECORDER SYSTEM ONLY)	950951	RF
- 6	284N1800-190	EQUIPMENT INSTL-MAIN ELECTRONICS EQPT CTR (FLIGHT DATA RECORDER SYSTEM ONLY) FOR NHA/OTHER SYS DET SEE: 24-00-58-05E	504504 506903	RF
- 8	284N1800-88	EQUIPMENT INSTL-MAIN ELECTRONICS EQPT CTR (FLIGHT DATA RECORDER SYSTEM ONLY) FOR NHA/OTHER SYS DET SEE: 24-00-58-05E	505505	RF

MISSING ITEM NUMBERS NOT APPLICABLE

- ITEM NOT ILLUSTRATED

BOEING PROPRIETARY - Copyright © - Unpublished Work - See title page for details.

	FIG ITEM	PART NUMBER	1 2 3 4 5 6 7 NOMENCLATURE	EFFECT FROM TO	UNITS PER ASSY
	1				
R	10	2227000-5	.ACQUISITION UNIT-DIGITAL FLIGHT DATA SUPPLIER CODE: V98571 ELECTRICAL EQUIP NUMBER: M00138 COMPONENT MAINT MANUAL REF: 31-32-04 FOR DETAILS SEE: 31-31-03-01A	904949	1
R					
R					
R					
R					
R					
R					
R					
R					
R					
	10	775110-18-001	.ACQUISITION UNIT-DIGITAL FLIGHT DATA SUPPLIER CODE: V73030 SPECIFICATION NUMBER: S283T010-9 CONFIG CHG DATA FROM A CMM: SUPSD BY 775110-18-002 ELECTRICAL EQUIP NUMBER: M00138 COMPONENT MAINT MANUAL REF: 31-22-19 FOR DETAILS SEE: 31-31-03-01A	107107	1
	10	775110-18-002	.ACQUISITION UNIT-DIGITAL FLIGHT DATA SUPPLIER CODE: V73030 SPECIFICATION NUMBER: S283T010-11 CONFIG CHG DATA FROM A CMM: SUPSDS 775110-18-001 ELECTRICAL EQUIP NUMBER: M00138 COMPONENT MAINT MANUAL REF: 31-32-19 FOR DETAILS SEE: 31-31-03-01A	107107	1

MISSING ITEM NUMBERS NOT APPLICABLE

– ITEM NOT ILLUSTRATED

BOEING PROPRIETARY - Copyright © - Unpublished Work - See title page for details.

	FIG ITEM	PART NUMBER	1 2 3 4 5 6 7 NOMENCLATURE	EFFECT FROM TO	UNITS PER ASSY
	1				
R	10	BCREFX126	.ACQUISITION UNIT-DIGITAL	904949	1
R			FLIGHT DATA		
R			SUPPLIER CODE:		
R			V98571		
R			OVERLENGTH PART NUMBER:		
R			XB2227000-5SEEIPC		
R			PART MODIFICATION LEVEL:		
R			REV E REQD PROG UNIT		
R			STATUS 3		
R			ELECTRICAL EQUIP NUMBER:		
R			M00138		
R			FOR DETAILS SEE:		
R			31-31-03-01A		
R	11	2233000-811	.ACQUISITION UNIT-DIGITAL	504903	1
R			FLIGHT DATA		
R			SUPPLIER CODE:		
R			V98571		
R			FUNCTIONAL DESCRIPTION:		
R			RECEIVES DATA FROM		
R			VARIOUS AIRPLANE SYSTEMS		
R			AND OUTPUTS FORMATTED		
R			DATA TO THE FLIGHT DATA		
R			RECORDER.		
R			ELECTRICAL EQUIP NUMBER:		
R			M00138		
R			COMPONENT MAINT MANUAL REF:		
R			31-33-04		
R			FOR DETAILS SEE:		
R			31-31-03-01A		
	11	ED44B400	.ACQUISITION UNIT-DIGITAL	121503	1
			FLIGHT DATA		
			SUPPLIER CODE:		
			VF6151		
			ELECTRICAL EQUIP NUMBER:		
			M00138		
			COMPONENT MAINT MANUAL REF:		
			31-35-31		
			FOR DETAILS SEE:		
			31-31-03-01A		

MISSING ITEM NUMBERS NOT APPLICABLE

– ITEM NOT ILLUSTRATED

BOEING PROPRIETARY - Copyright © - Unpublished Work - See title page for details.

	FIG ITEM	PART NUMBER	1 2 3 4 5 6 7 NOMENCLATURE	EFFECT FROM TO	UNITS PER ASSY
	1				
R	11	2233000-3A	.ACQUISITION UNIT-DIGITAL	002004	1
R			FLIGHT DATA	006100	
R			SUPPLIER CODE:		
R			V98571		
R			MISCELLANEOUS DATA:		
R			2233000-3A HAS ACMS		
R			CAPABILITY WITH BUILT-IN		
R			FLOPPY DRIVE		
R			ELECTRICAL EQUIP NUMBER:		
R			M00138		
R			COMPONENT MAINT MANUAL REF:		
R			31-32-80		
R			FOR DETAILS SEE:		
R			31-31-03-01A		
R	11	2233000-4A	.ACQUISITION UNIT-DIGITAL	952999	1
R			FLIGHT DATA		
R			SUPPLIER CODE:		
R			V98571		
R			MISCELLANEOUS DATA:		
R			2233000-4A HAS ACMS		
R			CAPABILITY WITH BUILT-IN		
R			FLOPPY DRIVE		
R			ELECTRICAL EQUIP NUMBER:		
R			M00138		
R			COMPONENT MAINT MANUAL REF:		
R			31-32-80		
R			FOR DETAILS SEE:		
R			31-31-03-01A		
R	12	2233000-3B	.ACQUISITION UNIT-DIGITAL	950951	1
R			FLIGHT DATA		
R			SUPPLIER CODE:		
R			V98571		
R			ELECTRICAL EQUIP NUMBER:		
R			M00138		
R			COMPONENT MAINT MANUAL REF:		
R			31-32-80		
R			POST SERVICE BULLETIN:		
R			2233000-31-65		
R			V98571		
R			FOR DETAILS SEE:		
R			31-31-03-01A		
R	- 65	76725	.DISKETTE-TEST	950951	1
R			SUPPLIER CODE:		
R			V98571		
	- 200	286N1433-002	WIRE BUNDLE ASSY-	904949	RF
			REWORKED BY ALERT SB:		
			34A0222		

MISSING ITEM NUMBERS NOT APPLICABLE

- ITEM NOT ILLUSTRATED

BOEING PROPRIETARY - Copyright © - Unpublished Work - See title page for details.

FIG ITEM	PART NUMBER	1 2 3 4 5 6 7 NOMENCLATURE	EFFECT FROM TO	UNITS PER ASSY
1				
- 200	286N1433-003	WIRE BUNDLE ASSY- REWORKED BY ALERT SB: 34A0222	107107	RF
- 200	286N1433-016	WIRE BUNDLE ASSY- REWORKED BY ALERT SB: 34A0222	011017 950951	RF
- 200	286N1433-017	WIRE BUNDLE ASSY- REWORKED BY ALERT SB: 34A0222	121503	RF
- 201	286N1433-026	WIRE BUNDLE ASSY- REWORKED BY SB: 34-0200 REWORKED BY ALERT SB: 34A0222	952999	RF
- 201	286N1433-027	WIRE BUNDLE ASSY- REWORKED BY ALERT SB: 34A0222	002004 006010 018100	RF
- 204	286N1433-346	WIRE BUNDLE ASSY- REWORKED BY ALERT SB: 34A0222	504903	RF
210	BKA31C0101	.CONNECTOR- SUPPLIER CODE: V71468 SPECIFICATION NUMBER: BACC66K31C0101 OPTIONAL PART: S631C0101 V59610 NIC66H31C0101 V00779 ELECTRICAL EQUIP NUMBER: D00011 WIRING DIAGRAM REF: 313101 REWORKED BY ALERT SB: 34A0222	002004 006100 107107 121999	1
- 500	226N1002-3060	SOFTWARE INSTL-DFDAU FOR NHA SEE: 25-10-00-22	504903	RF

MISSING ITEM NUMBERS NOT APPLICABLE

- ITEM NOT ILLUSTRATED

BOEING PROPRIETARY - Copyright © - Unpublished Work - See title page for details.

	FIG ITEM	PART NUMBER	1 2 3 4 5 6 7 NOMENCLATURE	EFFECT FROM TO	UNITS PER ASSY
	1				
R	- 505	3106TDYM10-01	.SOFTWARE-DFDAU MANDATORY	504903	1
R			SUPPLIER CODE:		
R			V98571		
R			MISCELLANEOUS DATA:		
R			DISKETTE QTY : 2 DISKS		
R			USED WITH:		
R			2233000-816		
R			2233000-811		
R			HARDWARE REFERENCE SEE:		
R			31-31-03-01		
R			FOR SPARES PROCURE:		
R			2237274-01		
R			V98571		

MISSING ITEM NUMBERS NOT APPLICABLE

– ITEM NOT ILLUSTRATED

BOEING PROPRIETARY - Copyright © - Unpublished Work - See title page for details.

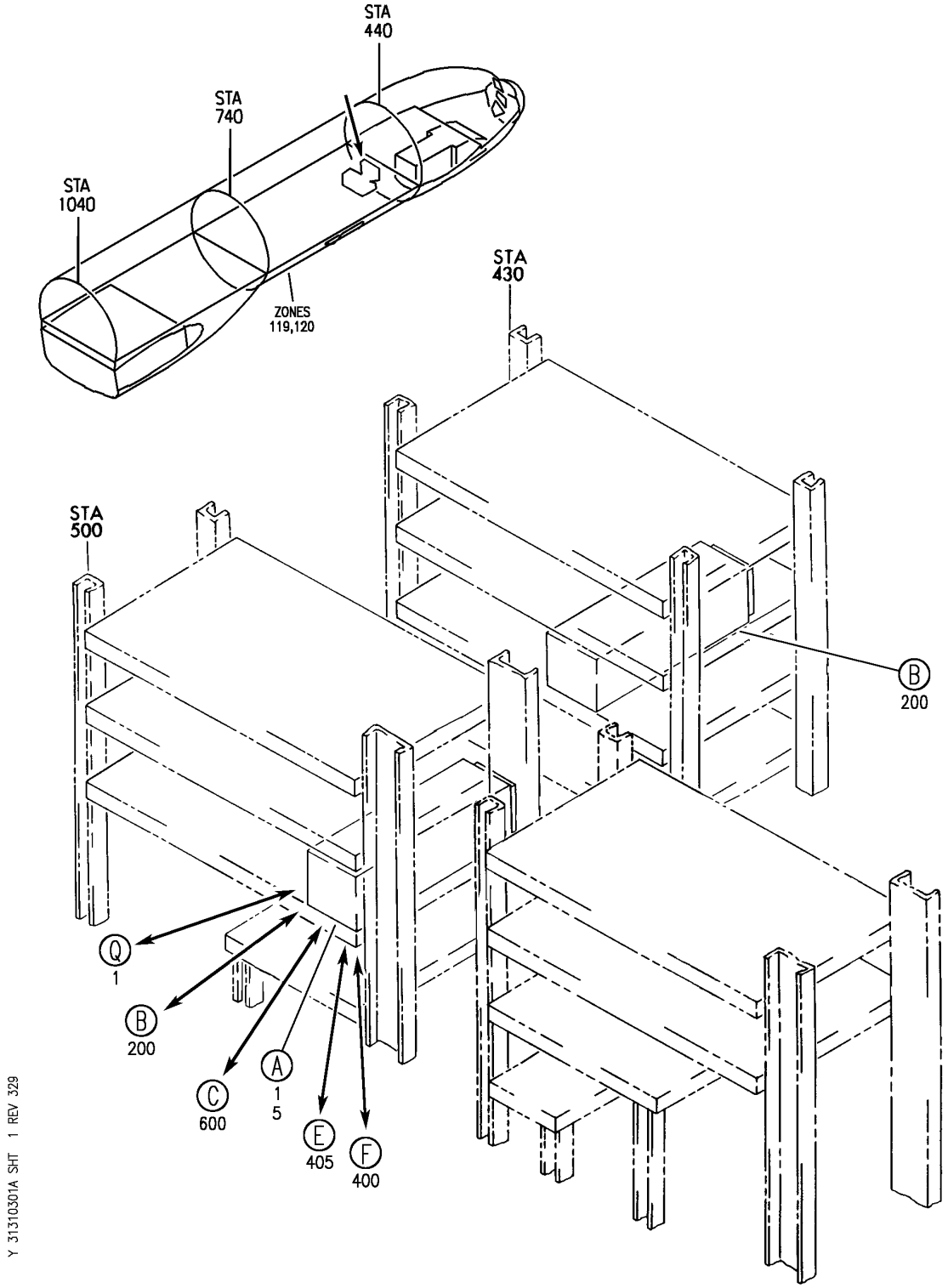

ACQUISITION UNIT-DIGITAL FLIGHT DATA (CUSTOMER FURNSHED)
FIGURE 1A (SHEET 1)

BOEING PROPRIETARY - Copyright © - Unpublished Work - See title page for details.

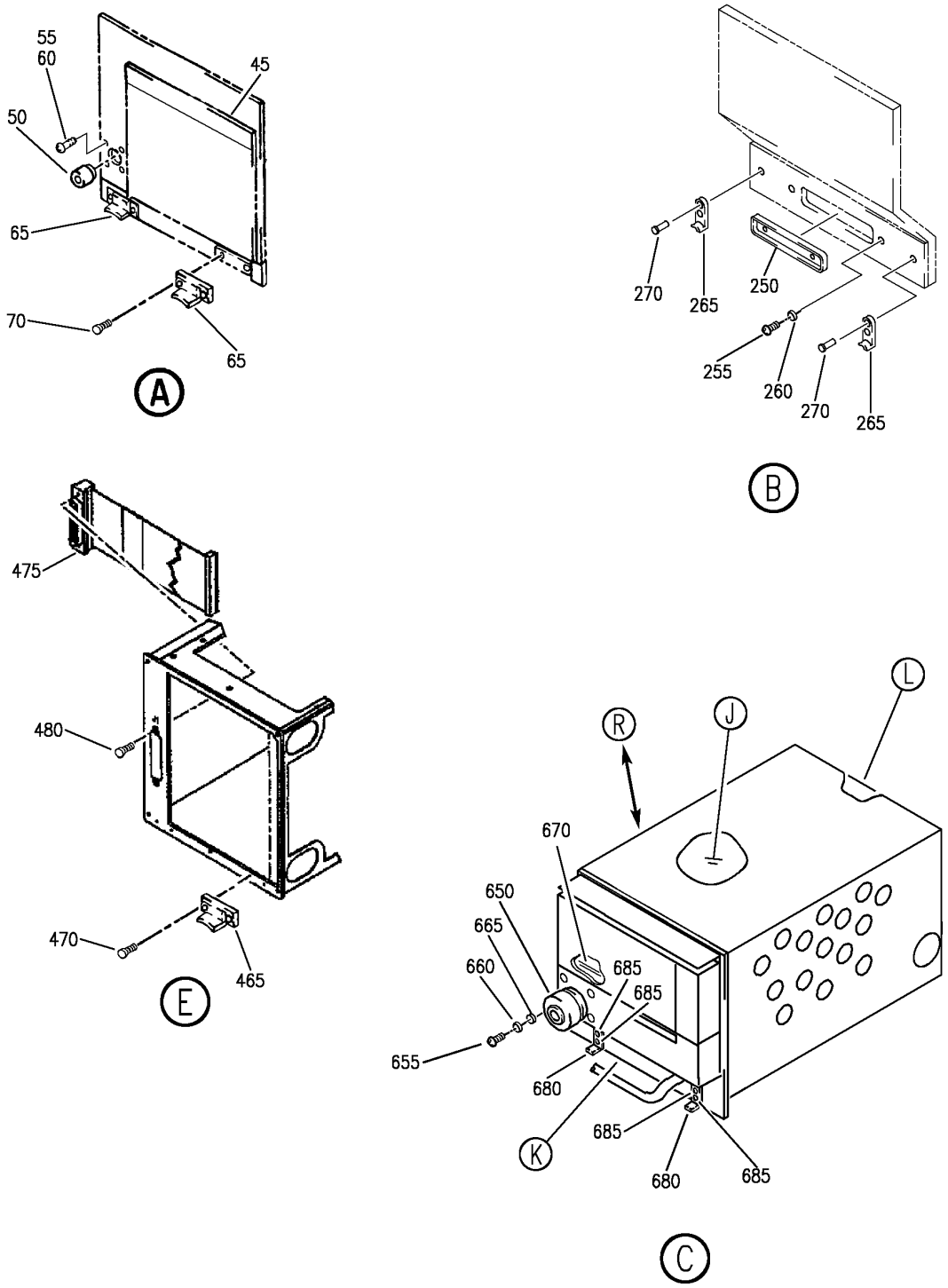

Y 31310301A SHT 2 REV 329

ACQUISITION UNIT-DIGITAL FLIGHT DATA (CUSTOMER FURNSHED)
FIGURE 1A (SHEET 2)

BOEING PROPRIETARY - Copyright © - Unpublished Work - See title page for details.

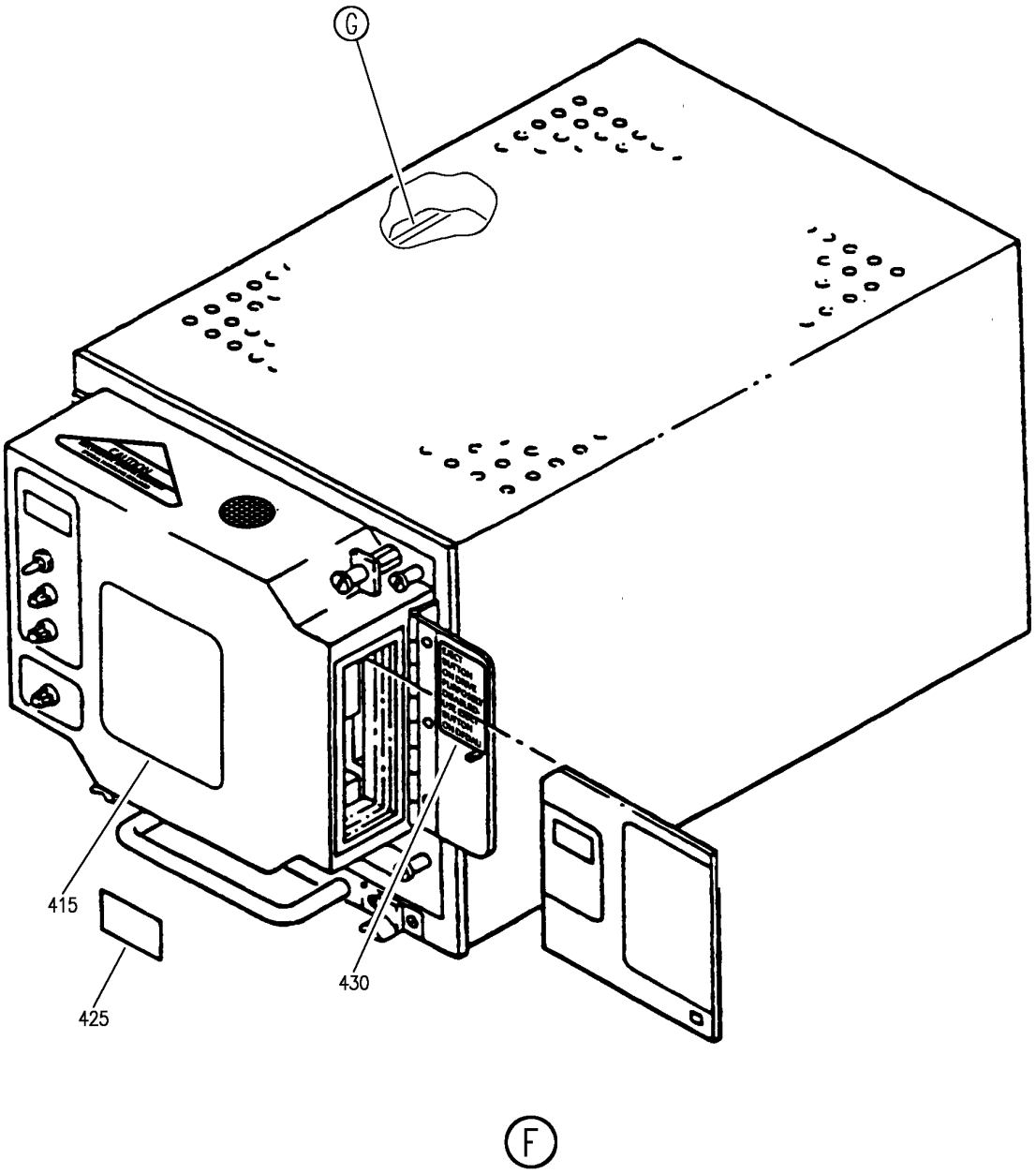

Y 31310301A SHT 3 REV 261

ACQUISITION UNIT-DIGITAL FLIGHT DATA (CUSTOMER FURNSHED)
FIGURE 1A (SHEET 3)

BOEING PROPRIETARY - Copyright © - Unpublished Work - See title page for details.

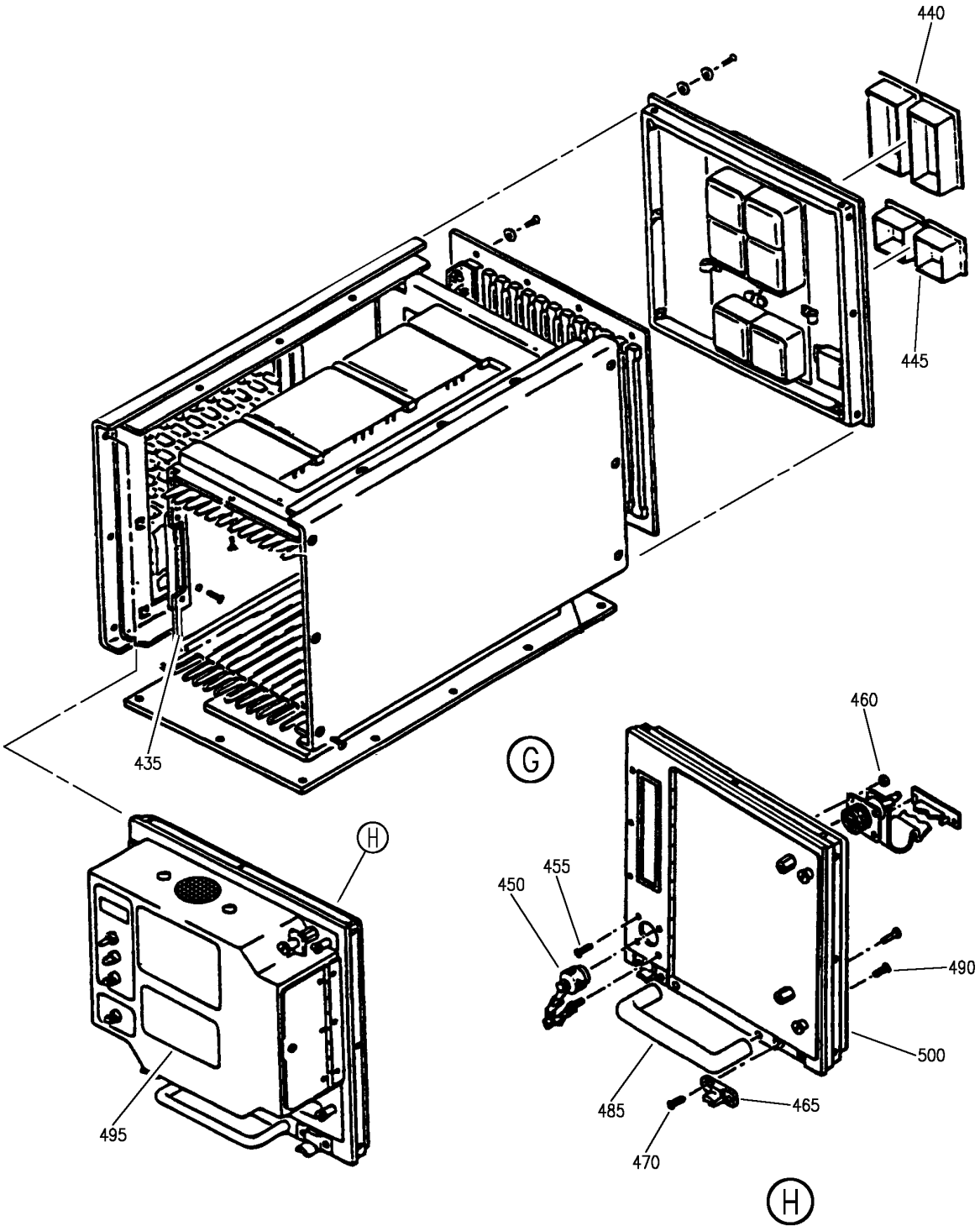

ACQUISITION UNIT-DIGITAL FLIGHT DATA (CUSTOMER FURNSHED)
FIGURE 1A (SHEET 4)

BOEING PROPRIETARY - Copyright © - Unpublished Work - See title page for details.

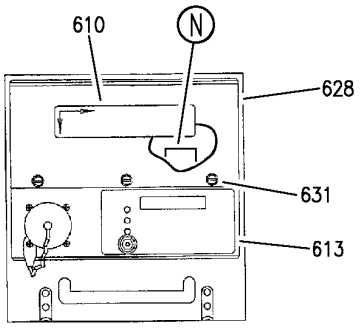

K

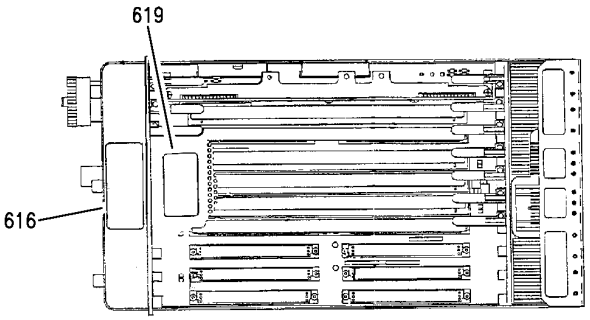

J

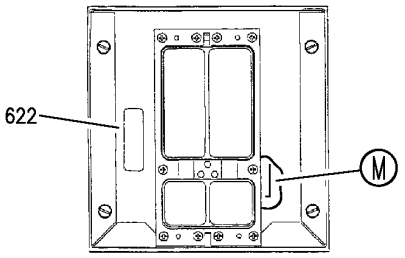

L

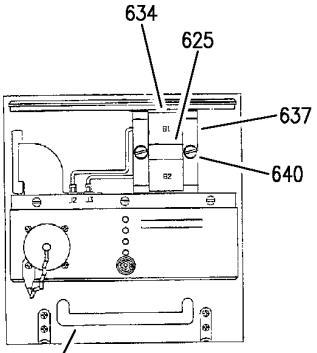

N

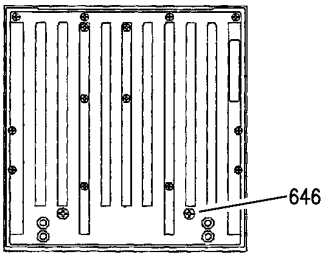

M

Y 31310301A SHT 5 REV 266

ACQUISITION UNIT-DIGITAL FLIGHT DATA (CUSTOMER FURNSHED)
FIGURE 1A (SHEET 5)

BOEING PROPRIETARY - Copyright © - Unpublished Work - See title page for details.

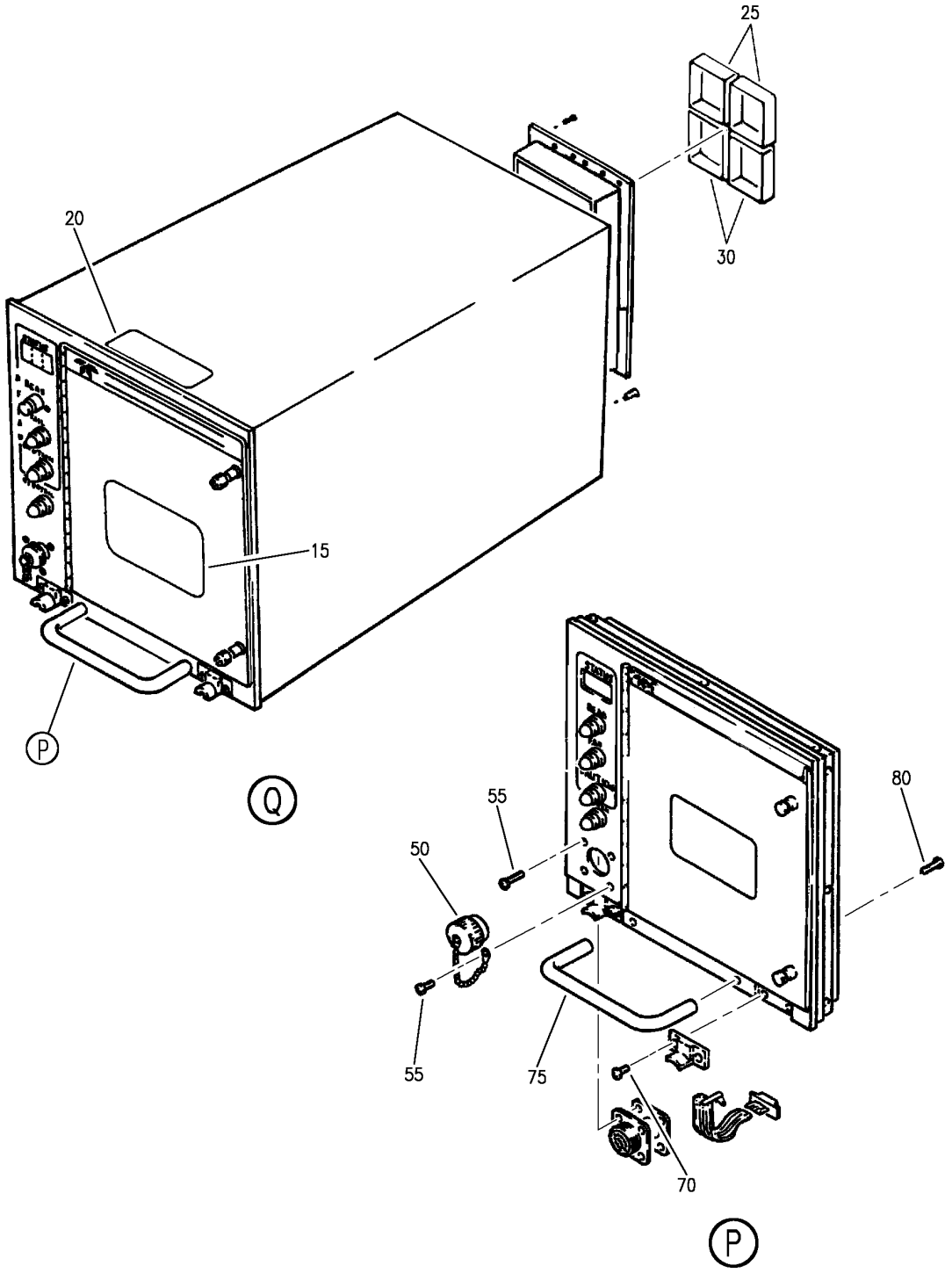

Y 31310301A SHT 6 REV 297

ACQUISITION UNIT-DIGITAL FLIGHT DATA (CUSTOMER FURNSHED)
FIGURE 1A (SHEET 6)

BOEING PROPRIETARY - Copyright © - Unpublished Work - See title page for details.

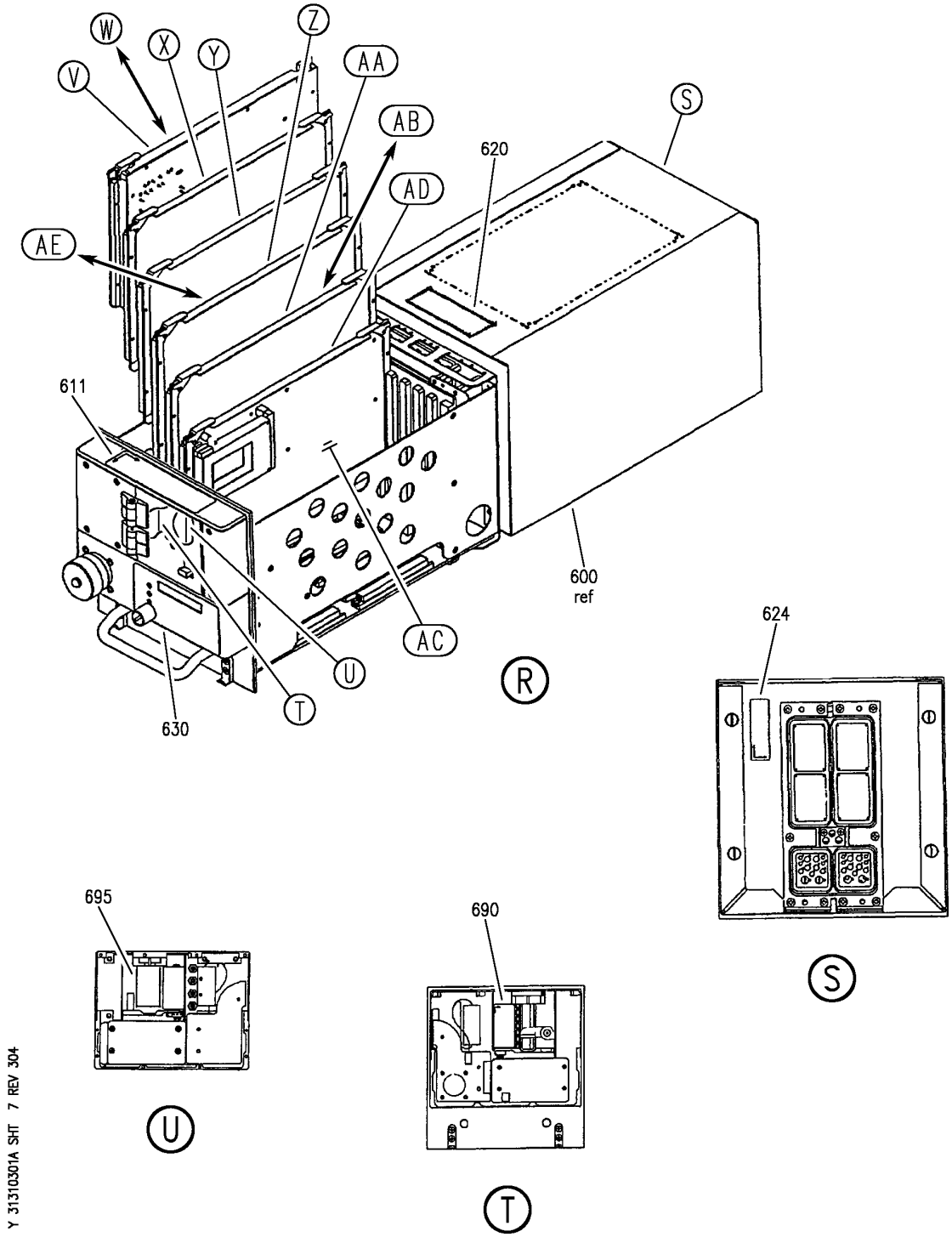

ACQUISITION UNIT-DIGITAL FLIGHT DATA (CUSTOMER FURNSHED)
FIGURE 1A (SHEET 7)

BOEING PROPRIETARY - Copyright © - Unpublished Work - See title page for details.

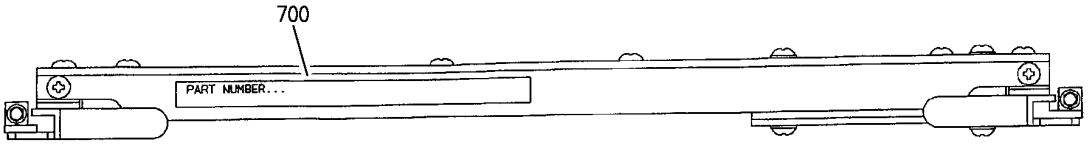

V

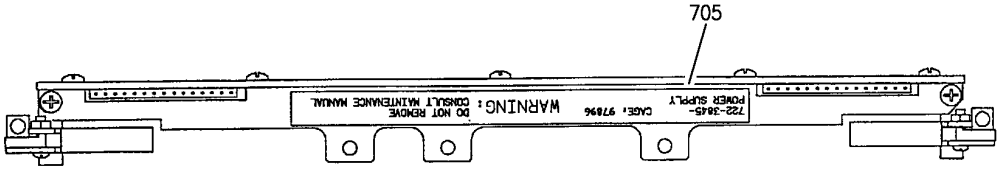

W

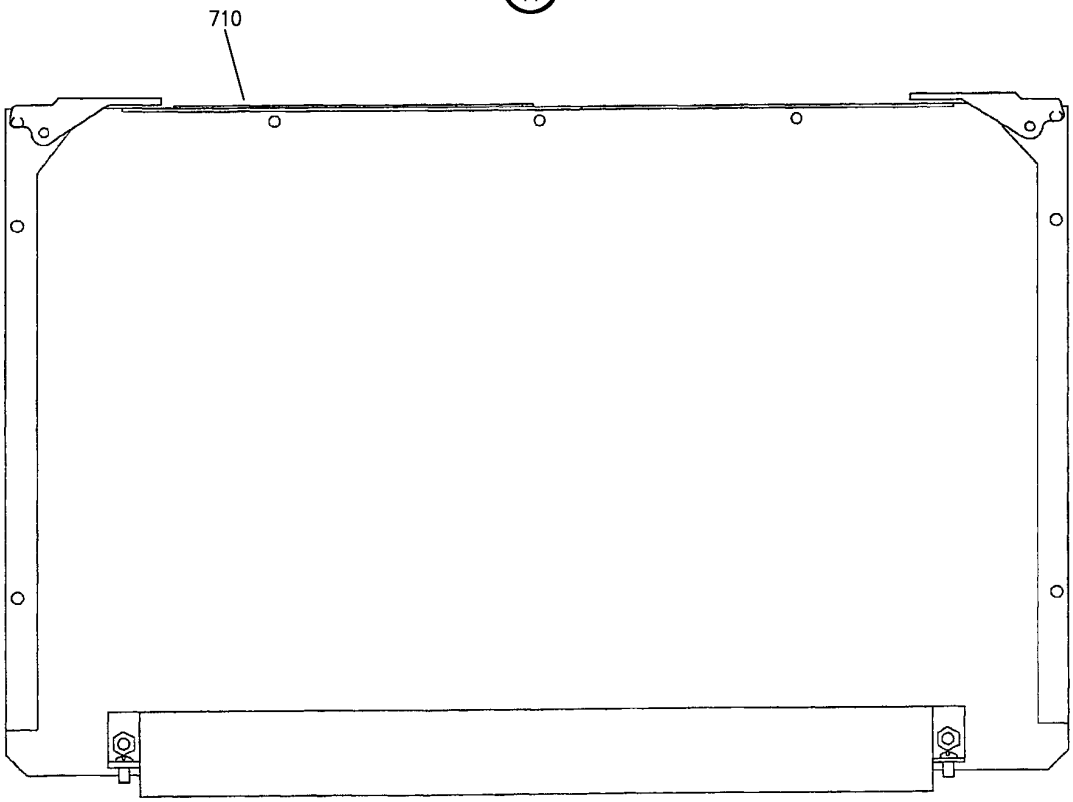

X

Y 31310301A SHT 8 REV 304

ACQUISITION UNIT-DIGITAL FLIGHT DATA (CUSTOMER FURNSHED)
FIGURE 1A (SHEET 8)

BOEING PROPRIETARY - Copyright © - Unpublished Work - See title page for details.

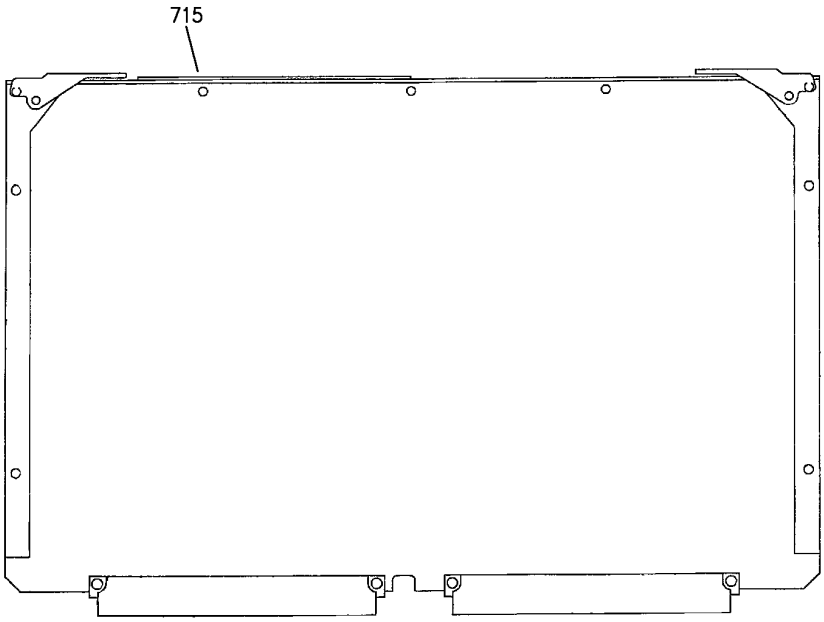

Y

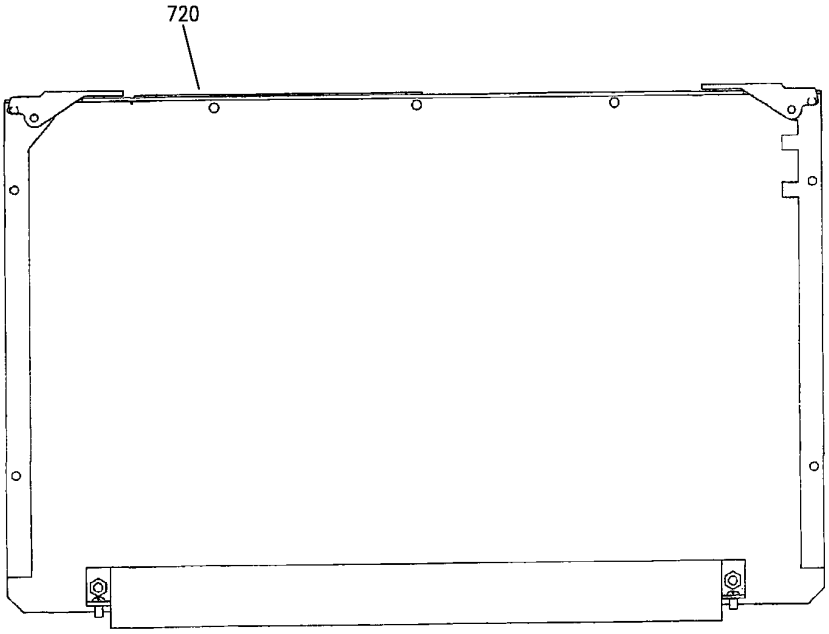

Z

Y 31310301A SHT 9 REV 304

ACQUISITION UNIT-DIGITAL FLIGHT DATA (CUSTOMER FURNSHED)
FIGURE 1A (SHEET 9)

BOEING PROPRIETARY - Copyright © - Unpublished Work - See title page for details.

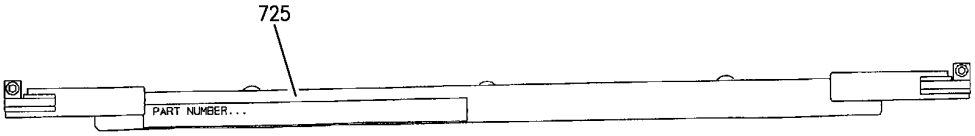

AA

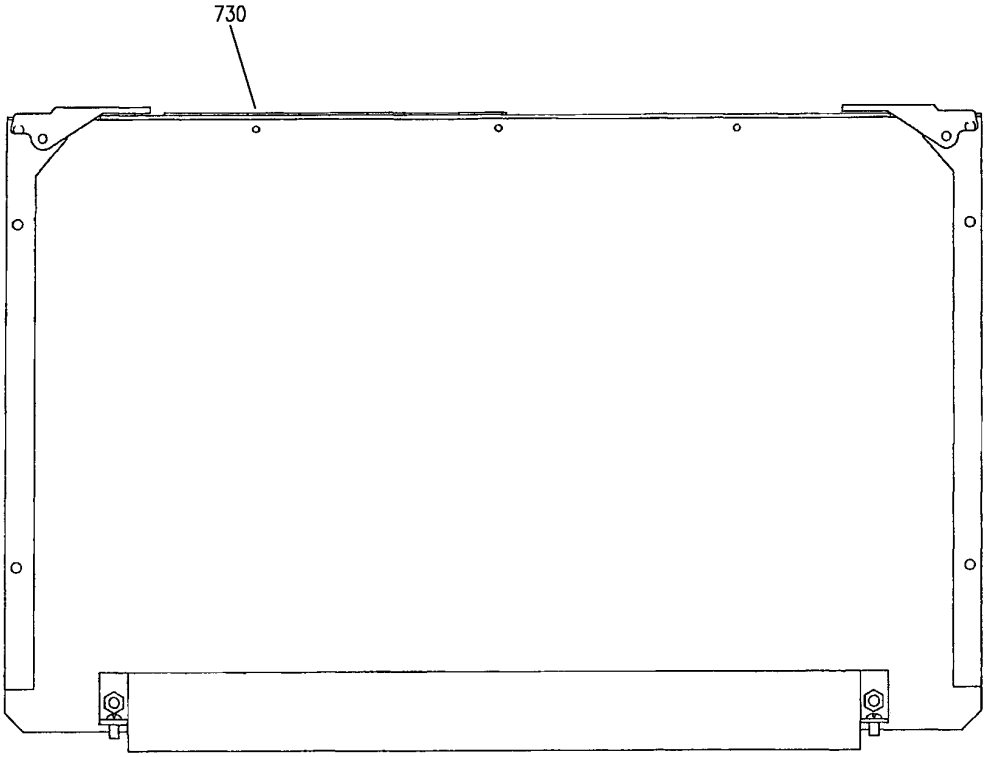

AB

Y 31310301A SHT 10 REV 304

ACQUISITION UNIT-DIGITAL FLIGHT DATA (CUSTOMER FURNSHED)
FIGURE 1A (SHEET 10)

BOEING PROPRIETARY - Copyright © - Unpublished Work - See title page for details.

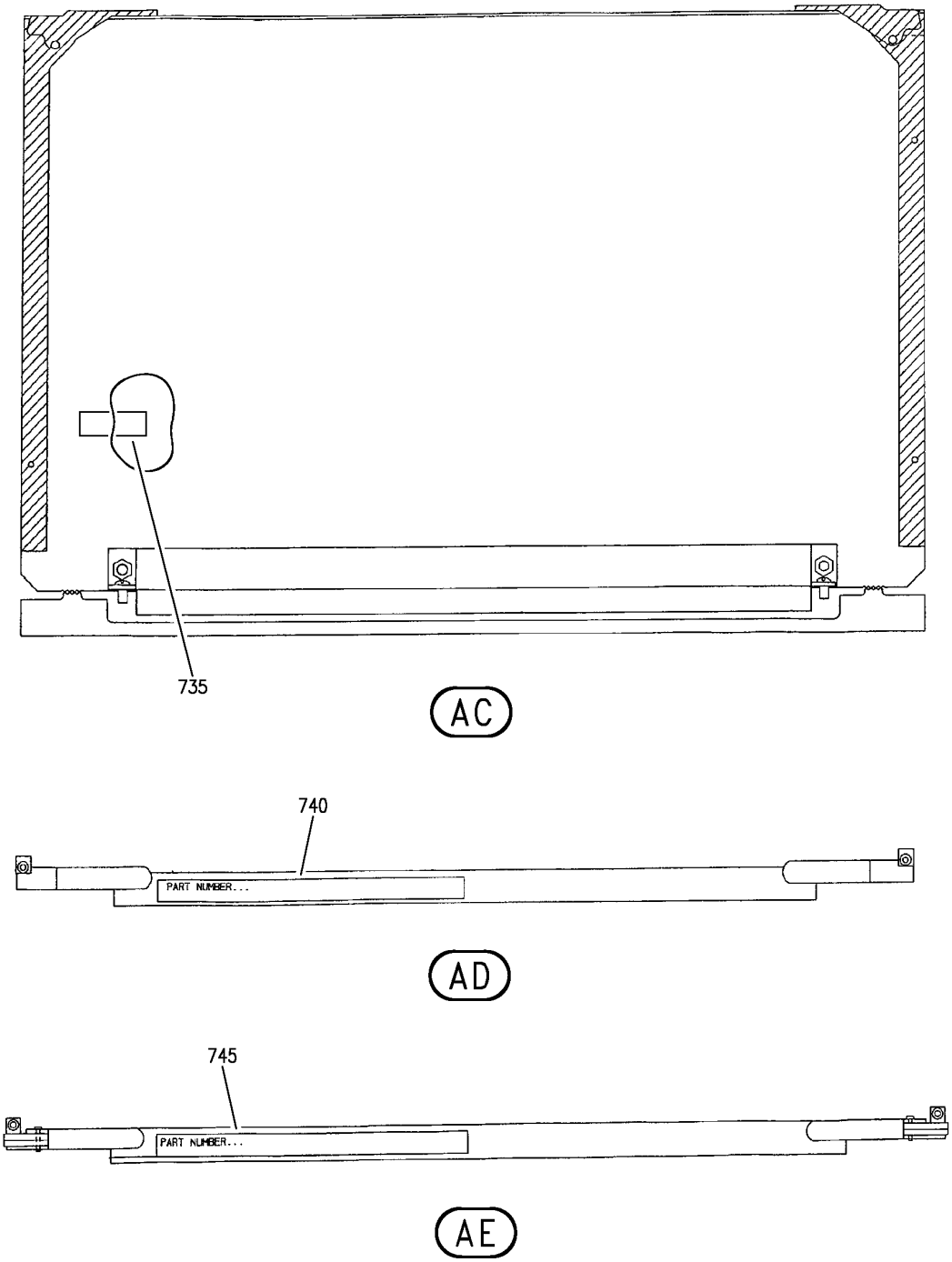

ACQUISITION UNIT-DIGITAL FLIGHT DATA (CUSTOMER FURNSHED)
FIGURE 1A (SHEET 11)

BOEING PROPRIETARY - Copyright © - Unpublished Work - See title page for details.

	FIG ITEM	PART NUMBER	1 2 3 4 5 6 7 NOMENCLATURE	EFFECT FROM TO	UNITS PER ASSY
	1A				
			ACQUISITION UNIT-DIGITAL	002004	
			FLIGHT DATA (CUSTOMER	006100	
			FURNSHED)	107107	
				121999	
R	1	2227000-5	ACQUISITION UNIT-DIGITAL	904949	RF
R			FLIGHT DATA		
R			SUPPLIER CODE:		
R			V98571		
R			ELECTRICAL EQUIP NUMBER:		
R			M00138		
R			COMPONENT MAINT MANUAL REF:		
R			31-32-04		
R			FOR NHA SEE:		
R			31-31-03-01		
R	1	BCREFX126	ACQUISITION UNIT-DIGITAL	904949	RF
R			FLIGHT DATA		
R			SUPPLIER CODE:		
R			V98571		
R			OVERLENGTH PART NUMBER:		
R			XB2227000-5SEEIPC		
R			PART MODIFICATION LEVEL:		
R			REV E REQD PROG UNIT		
R			STATUS 3		
R			ELECTRICAL EQUIP NUMBER:		
R			M00138		
R			FOR NHA SEE:		
R			31-31-03-01		
	45	2226418-2	.LABEL-LOGO	904949	1
			SUPPLIER CODE:		
			V98571		
	50	MS27511A12C	.CAP-PROTECTIVE	904949	1
			ATTACHING PARTS		
	55	MS51957-15	.SCREW	904949	4
	60	MS21083C04	.WASHER	904949	4
			-------*-------		
	65	2227016	.HOOK-HOLD DOWN	904949	2
			SUPPLIER CODE:		
			V98571		
			ATTACHING PARTS		
	70	MS24693C24	.SCREW	904949	4
			-------*-------		

MISSING ITEM NUMBERS NOT APPLICABLE

– ITEM NOT ILLUSTRATED

BOEING PROPRIETARY - Copyright © - Unpublished Work - See title page for details.

FIG ITEM	PART NUMBER	1 2 3 4 5 6 7 NOMENCLATURE	EFFECT FROM TO	UNITS PER ASSY
1A				
200	775110-18-001	ACQUISITION UNIT-DIGITAL FLIGHT DATA SUPPLIER CODE: V73030 SPECIFICATION NUMBER: S283T010-9 CONFIG CHG DATA FROM A CMM: SUPSD BY 775110-18-002 ELECTRICAL EQUIP NUMBER: M00138 COMPONENT MAINT MANUAL REF: 31-32-19 FOR NHA SEE: 31-31-03-01	107107	RF
200	775110-18-002	ACQUISITION UNIT-DIGITAL FLIGHT DATA SUPPLIER CODE: V73030 SPECIFICATION NUMBER: S283T010-11 CONFIG CHG DATA FROM A CMM: SUPSDS 775110-18-001 ELECTRICAL EQUIP NUMBER: M00138 COMPONENT MAINT MANUAL REF: 31-32-19 FOR NHA SEE: 31-31-03-01	107107	RF
200	ED44B400	ACQUISITION UNIT-DIGITAL FLIGHT DATA SUPPLIER CODE: VF6151 ELECTRICAL EQUIP NUMBER: M00138 COMPONENT MAINT MANUAL REF: 31-35-31 FOR NHA SEE: 31-31-03-01	121503	RF
250	HS776253-4	.CAP-PROTECTIVE SUPPLIER CODE: V07418 SPECIFICATION NUMBER: S459-300-4-2-0 ATTACHING PARTS	107107 121503	1
255	MS51957-17	.SCREW	107107 121503	2
260	AN960C4	.WASHER -------*-------	107107 121503	2

MISSING ITEM NUMBERS NOT APPLICABLE

– ITEM NOT ILLUSTRATED

BOEING PROPRIETARY - Copyright © - Unpublished Work - See title page for details.

	FIG ITEM	PART NUMBER	1 2 3 4 5 6 7 NOMENCLATURE	EFFECT FROM TO	UNITS PER ASSY
	1A				
	265	NAS622T3	.HOOK	107107 121503	2
			ATTACHING PARTS		
	270	MS20426AD5-9	.RIVET	107107 121503	4
			-------*-------		
R	400	2233000-3A	ACQUISITION UNIT-DIGITAL FLIGHT DATA SUPPLIER CODE: V98571 MISCELLANEOUS DATA: 2233000-3A HAS ACMS CAPABILITY WITH BUILT-IN FLOPPY DRIVE ELECTRICAL EQUIP NUMBER: M00138 COMPONENT MAINT MANUAL REF: 31-32-80 FOR NHA SEE: 31-31-03-01	002004 006100	RF
R	400	2233000-4A	ACQUISITION UNIT-DIGITAL FLIGHT DATA SUPPLIER CODE: V98571 MISCELLANEOUS DATA: 2233000-4A HAS ACMS CAPABILITY WITH BUILT-IN FLOPPY DRIVE ELECTRICAL EQUIP NUMBER: M00138 COMPONENT MAINT MANUAL REF: 31-32-80 FOR NHA SEE: 31-31-03-01	952999	RF
R	400	2233000-3B	ACQUISITION UNIT-DIGITAL FLIGHT DATA SUPPLIER CODE: V98571 ELECTRICAL EQUIP NUMBER: M00138 COMPONENT MAINT MANUAL REF: 31-32-80 POST SERVICE BULLETIN: 2233000-31-65 V98571 FOR NHA SEE: 31-31-03-01	950951	RF

MISSING ITEM NUMBERS NOT APPLICABLE

– ITEM NOT ILLUSTRATED

BOEING PROPRIETARY - Copyright © - Unpublished Work - See title page for details.

	FIG ITEM	PART NUMBER	1 2 3 4 5 6 7 NOMENCLATURE	EFFECT FROM TO	UNITS PER ASSY
	1A				
R	405	2233000-811	ACQUISITION UNIT-DIGITAL	504903	RF
R			FLIGHT DATA		
R			SUPPLIER CODE:		
R			V98571		
R			FUNCTIONAL DESCRIPTION:		
R			RECEIVES DATA FROM		
R			VARIOUS AIRPLANE SYSTEMS		
R			AND OUTPUTS FORMATTED		
R			DATA TO THE FLIGHT DATA		
R			RECORDER.		
R			ELECTRICAL EQUIP NUMBER:		
R			M00138		
R			COMPONENT MAINT MANUAL REF:		
R			31-33-04		
R			FOR NHA SEE:		
R			31-31-03-01		
	450	SE91F10C30-2S	.CAP-PROTECTIVE	002004	1
			SUPPLIER CODE:	006100	
			V07418	950999	
			USED ON:		
			2233000-3A		
			2233000-3B		
			2233000-4A		
			2233000-23		
			2233000-23A		
			2233000-43		
			2233000-45		
			ATTACHING PARTS		
	455	MS51957-15	.SCREW-	002004	4
			USED ON:	006100	
			2233000-3A	950999	
			2233000-3B		
			2233000-4A		
			2233000-23		
			2233000-23A		
			2233000-43		
			2233000-45		
	460	MS21083C04	.WASHER-	002004	4
			USED ON:	006100	
			2233000-3A	950999	
			2233000-3B		
			2233000-4A		
			2233000-23		
			2233000-23A		
			2233000-43		
			2233000-45		
			-------*-------		

MISSING ITEM NUMBERS NOT APPLICABLE

— ITEM NOT ILLUSTRATED

BOEING PROPRIETARY - Copyright © - Unpublished Work - See title page for details.

FIG ITEM	PART NUMBER	1 2 3 4 5 6 7 NOMENCLATURE	EFFECT FROM TO	UNITS PER ASSY
1A				
465	2227016	.HOOK-	002004	2
		SUPPLIER CODE:	006100	
		V98571	504903	
		USED ON:	950999	
		2233000-3A		
		2233000-3B		
		2233000-4A		
		2233000-23		
		2233000-23A		
		2233000-43		
		2233000-45		
		2233000-815-1		
		2233000-816-1		
		ATTACHING PARTS		
470	MS24693C24	.SCREW-	002004	4
		USED ON:	006100	
		2233000-3A	950999	
		2233000-3B		
		2233000-4A		
		2233000-23		
		2233000-23A		
		2233000-43		
		2233000-45		
470	TP24693C28	.SCREW-	504903	4
		SUPPLIER CODE:		
		V5G464		
		-------*-------		
475	2234147-1	.CONNECTOR-	504903	1
		SUPPLIER CODE:		
		V98571		
		ATTACHING PARTS		
480	TP51957-40	.SCREW-	504903	1
		SUPPLIER CODE:		
		V5G464		
		-------*-------		

MISSING ITEM NUMBERS NOT APPLICABLE

— ITEM NOT ILLUSTRATED

BOEING PROPRIETARY - Copyright © - Unpublished Work - See title page for details.

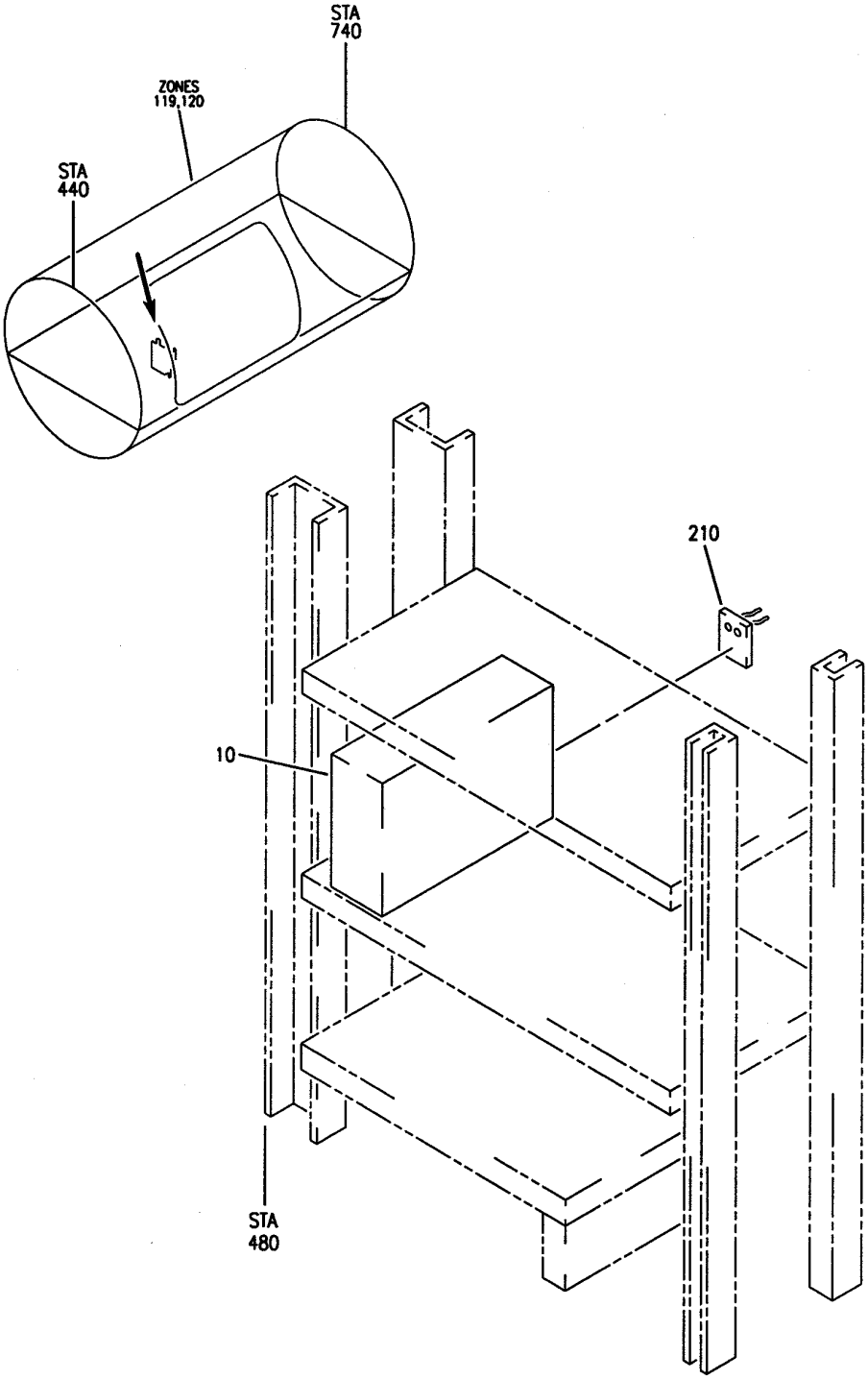

Y 31310301B REV 219

EQUIPMENT AND SOFTWARE INSTL- MAIN ELECTRONICS EQPT CTR (FLIGHT DATA RECORDER SYSTEM ONLY)
FIGURE 1B

BOEING PROPRIETARY - Copyright © - Unpublished Work - See title page for details.

	FIG ITEM	PART NUMBER	1 2 3 4 5 6 7 NOMENCLATURE	EFFECT FROM TO	UNITS PER ASSY
	1B				
			EQUIPMENT AND SOFTWARE INSTL- MAIN ELECTRONICS EQPT CTR (FLIGHT DATA RECORDER SYSTEM ONLY)	101102	
	- 3	284N1800-140	EQUIPMENT INSTL-MAIN ELECTRONICS EQPT CTR (FLIGHT DATA RECORDER SYSTEM ONLY) FOR NHA/OTHER SYS DET SEE: 24-00-58-05E	101101	RF
	- 3	284N1800-141	EQUIPMENT INSTL-MAIN ELECTRONICS EQPT CTR (FLIGHT DATA RECORDER SYSTEM ONLY) FOR NHA/OTHER SYS DET SEE: 24-00-58-05E	102102	RF
R	10	2233000-815	.ACQUISITION UNIT-DIGITAL FLIGHT DATA SUPPLIER CODE: V98571 FUNCTIONAL DESCRIPTION: RECEIVES DATA FROM VARIOUS AIRPLANE SYSTEMS AND OUTPUTS FORMATTED DATA TO THE FLIGHT DATA RECORDER. MISCELLANEOUS DATA: THE -815 DFDAU HAS ACMS FUNCTIONALITY WITH BUILT-IN OPTICAL DISK DRIVE FOR LARGE CAPACITY STORAGE OF RAW DATA AND REPORTS ELECTRICAL EQUIP NUMBER: M00138 COMPONENT MAINT MANUAL REF: 31-33-04	101102	1

MISSING ITEM NUMBERS NOT APPLICABLE

- ITEM NOT ILLUSTRATED

BOEING PROPRIETARY - Copyright © - Unpublished Work - See title page for details.

	FIG ITEM	PART NUMBER	1 2 3 4 5 6 7 NOMENCLATURE	EFFECT FROM TO	UNITS PER ASSY
	1B				
R	10	2233000-816	.ACQUISITION UNIT-DIGITAL FLIGHT DATA SUPPLIER CODE: V98571 FUNCTIONAL DESCRIPTION: RECEIVES DATA FROM VARIOUS AIRPLANE SYSTEMS AND OUTPUTS FORMATTED DATA TO THE FLIGHT DATA RECORDER. MISCELLANEOUS DATA: THE -816 DFDAU HAS ACMS FUNCTIONALITY WITH REMOVABLE PCMCIA CARD FOR LARGE CAPACITY STORAGE OF RAW DATA AND REPORTS ELECTRICAL EQUIP NUMBER: M00138 COMPONENT MAINT MANUAL REF: 31-33-04	101102	1
	- 201	286N1433-351	WIRE BUNDLE ASSY- REWORKED BY ALERT SB: 34A0222	101101	RF
	- 201	286N1433-354	WIRE BUNDLE ASSY- REWORKED BY ALERT SB: 34A0222	102102	RF
	210	BKA31C0101	.CONNECTOR- SUPPLIER CODE: V71468 SPECIFICATION NUMBER: BACC66K31C0101 OPTIONAL PART: S631C0101 V59610 NIC66H31C0101 V00779 ELECTRICAL EQUIP NUMBER: D00011 WIRING DIAGRAM REF: 313101 REWORKED BY ALERT SB: 34A0222	101102	1
	- 500	226N1002-3040	SOFTWARE INSTL-DFDAU PRE-MODULE FOR NHA SEE: 25-10-00-22	101101	RF

MISSING ITEM NUMBERS NOT APPLICABLE

- ITEM NOT ILLUSTRATED

BOEING PROPRIETARY - Copyright © - Unpublished Work - See title page for details.

	FIG ITEM	PART NUMBER	1 2 3 4 5 6 7 NOMENCLATURE	EFFECT FROM TO	UNITS PER ASSY
	1B				
	- 500	226N1002-3050	SOFTWARE INSTL-DFDAU PRE-MODULE FOR NHA SEE: 25-10-00-22	102102	RF
R	- 510	3106TDYM10-01	.SOFTWARE-DFDAU MANDATORY SUPPLIER CODE: V98571 MISCELLANEOUS DATA: DISKETTE QTY : 2 DISKS USED WITH: 2233000-815 2233000-816 FOR SPARES PROCURE: 2237274-01 V98571	101102	1
R	- 520	3109TDYA10-02	.SOFTWARE-ACMS MONITORING SUPPLIER CODE: V98571 MISCELLANEOUS DATA: DISKETTE QTY : 1 DISK USED WITH: 2233000-816 FOR SPARES PROCURE: 2237275-02 V98571	101101	1
R	- 520	3109TDYA20-01	.SOFTWARE-ACMS MONITORING SUPPLIER CODE: V98571 MISCELLANEOUS DATA: DISKETTE QTY : 1 DISK USED WITH: 2233000-815 FOR SPARES PROCURE: 2237275-20 V98571	102102	1
	- 600	226N1002-8210	SOFTWARE INSTL-DFDAU PRE-MODULE FOR NHA SEE: 25-10-00-22	102102	RF
R	- 605	3108TDYA10-03	.SOFTWARE-ACMS MONITORING SUPPLIER CODE: V98571 MISCELLANEOUS DATA: DISKETTE QTY : 1 DISK USED WITH: 2233000-815 FOR SPARES PROCURE: 2237275-03 V98571	102102	1

MISSING ITEM NUMBERS NOT APPLICABLE

– ITEM NOT ILLUSTRATED

BOEING PROPRIETARY - Copyright © - Unpublished Work - See title page for details.

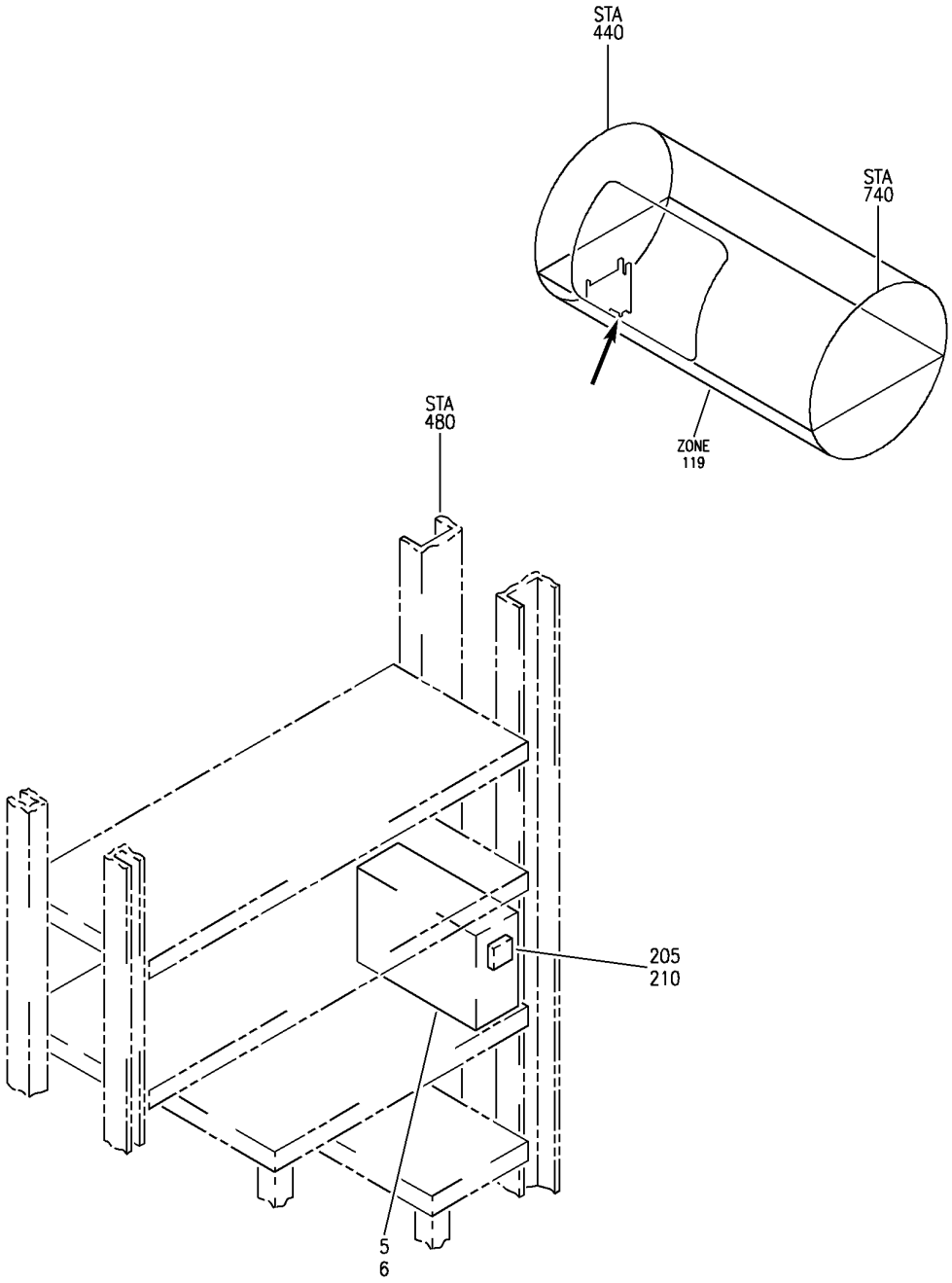

Y 31310308 REV 293

EQUIPMENT AND SOFTWARE INSTL-MAIN ELECTRONICS EQPT CTR DFDAU
FIGURE 8

BOEING PROPRIETARY - Copyright © - Unpublished Work - See title page for details.

	FIG ITEM	PART NUMBER	1 2 3 4 5 6 7 NOMENCLATURE	EFFECT FROM TO	UNITS PER ASSY
	8				
			EQUIPMENT AND SOFTWARE	103106	
			INSTL-MAIN ELECTRONICS	108120	
			EQPT CTR DFDAU		
-	1	284N4000-310004	EQUIPMENT INSTL-MAIN	108120	RF
			ELECTRONICS EQPT CTR		
			DFDAU		
			FOR NHA SEE:		
			24-00-58-05F		
-	2	MODREF29993	EQUIPMENT INSTL-MAIN	103105	1
			ELECTRONICS EQPT CTR		
			DFDAU		
			MODULE NUMBER:		
			284N4000-310032 REV C		
-	2	MODREF210600	EQUIPMENT INSTL-MAIN	106106	1
			ELECTRONICS EQPT CTR		
			DFDAU		
			MODULE NUMBER:		
			284N4000-310032 REV D		
R	5	967-0212-002	.ACQUISITION UNIT-	103106	1
R			SUPPLIER CODE:	108120	
R			V97896		
R			FUNCTIONAL DESCRIPTION:		
R			RECEIVES DATA FROM		
R			VARIOUS AIRPLANE SYSTEMS		
R			AND OUTPUTS FORMATTED		
R			DATA TO THE FLIGHT DATA		
R			RECORDER.		
R			MISCELLANEOUS DATA:		
R			967-0212-001 HAS 256WPS		
R			AND ACMS CAPABILITY WITH		
R			BUILT-IN PCMCIA CARD		
R			ELECTRICAL EQUIP NUMBER:		
R			M00138		
R			COMPONENT MAINT MANUAL REF:		
R			31-31-21		
R			REWORKED BY SB:		
R			VOYFPO		

MISSING ITEM NUMBERS NOT APPLICABLE

- ITEM NOT ILLUSTRATED

BOEING PROPRIETARY - Copyright © - Unpublished Work - See title page for details.

FIG ITEM	PART NUMBER	1 2 3 4 5 6 7 NOMENCLATURE	EFFECT FROM TO	UNITS PER ASSY
8				
5	967-0212-002	.ACQUISITION UNIT- SUPPLIER CODE: V97896 FUNCTIONAL DESCRIPTION: RECEIVES DATA FROM VARIOUS AIRPLANE SYSTEMS AND OUTPUTS FORMATTED DATA TO THE FLIGHT DATA MISCELLANEOUS DATA: 967-0212-001 HAS 256WPS AND ACMS CAPABILITY WITH BUILT-IN PCMCIA CARD ELECTRICAL EQUIP NUMBER: M00138 COMPONENT MAINT MANUAL REF: 31-31-21	103106 108120	1
5	2233000-815-1	.ACQUISITION UNIT- SUPPLIER CODE: V98571 FUNCTIONAL DESCRIPTION: RECEIVES DATA FROM VARIOUS AIRPLANE SYSTEMS AND OUTPUTS FORMATTED DATA TO THE FLIGHT DATA RECORDER. MISCELLANEOUS DATA: THE -815-1 DFDAU HAS ACMS FUNCTIONALITY WITH BUILT-IN OPTICAL DISK DRIVE FOR LARGE CAPACITY STORAGE OF RAW DATA AND REPORTS ELECTRICAL EQUIP NUMBER: M00138 COMPONENT MAINT MANUAL REF: 31-33-04	103106 108120	1

MISSING ITEM NUMBERS NOT APPLICABLE

– ITEM NOT ILLUSTRATED

BOEING PROPRIETARY - Copyright © - Unpublished Work - See title page for details.

FIG ITEM	PART NUMBER	1 2 3 4 5 6 7 NOMENCLATURE	EFFECT FROM TO	UNITS PER ASSY
8				
5	2233000-816-1	.ACQUISITION UNIT- SUPPLIER CODE: V98571 FUNCTIONAL DESCRIPTION: RECEIVES DATA FROM VARIOUS AIRPLANE SYSTEMS AND OUTPUTS FORMATTED DATA TO THE FLIGHT DATA RECORDER. MISCELLANEOUS DATA: THE -816-1 DFDAU HAS ACMS FUNCTIONALITY WITH REMOVABLE PCMCIA CARD FOR LARGE CAPACITY STORAGE OF RAW DATA AND REPORTS ELECTRICAL EQUIP NUMBER: M00138 COMPONENT MAINT MANUAL REF: 31-33-04	103106 108120	1
R 6	2233000-815-1	.ACQUISITION UNIT- SUPPLIER CODE: V98571 FUNCTIONAL DESCRIPTION: RECEIVES DATA FROM VARIOUS AIRPLANE SYSTEMS AND OUTPUTS FORMATTED DATA TO THE FLIGHT DATA RECORDER. ELECTRICAL EQUIP NUMBER: M00138 COMPONENT MAINT MANUAL REF: 31-33-04	108120	1
R 6	2233000-816-1	.ACQUISITION UNIT- SUPPLIER CODE: V98571 FUNCTIONAL DESCRIPTION: RECEIVES DATA FROM VARIOUS AIRPLANE SYSTEMS AND OUTPUTS FORMATTED DATA TO THE FLIGHT DATA RECORDER. ELECTRICAL EQUIP NUMBER: M00138	108120	1
- 200	286N1433-371	WIRE BUNDLE ASSY- REWORKED BY ALERT SB: 34A0222	108108	RF

MISSING ITEM NUMBERS NOT APPLICABLE

– ITEM NOT ILLUSTRATED

BOEING PROPRIETARY - Copyright © - Unpublished Work - See title page for details.

FIG ITEM	PART NUMBER	1 2 3 4 5 6 7 NOMENCLATURE	EFFECT FROM TO	UNITS PER ASSY
8				
- 202	286N1433-353	WIRE BUNDLE ASSY-	109120	RF
		REWORKED BY ALERT SB:		
		34A0222		
- 204	286N1433-601	WIRE BUNDLE ASSY	103105	RF
- 204	286N1433-602	WIRE BUNDLE ASSY	106106	RF
205	BKA31C0101	.CONNECTOR-	103106	1
		SUPPLIER CODE:	108120	
		V71468		
		SPECIFICATION NUMBER:		
		BACC66K31C0101		
		OPTIONAL PART:		
		S631C0101		
		V59610		
		NIC66H31C0101		
		V00779		
		ELECTRICAL EQUIP NUMBER:		
		D00011		
		WIRING DIAGRAM REF:		
		313101		
210	RBGP48-116N	.BLOCK-	103106	2
		SUPPLIER CODE:		
		V09922		
		SPECIFICATION NUMBER:		
		S280W601-116		
		ELECTRICAL EQUIP NUMBER:		
		D00011T		
		D00011U		
		WIRING DIAGRAM REF:		
		313101		
- 500	226N1002-1110	SOFTWARE INSTL-DFDAU	108120	RF
		PREMODULE		
		FOR NHA SEE:		
		25-10-00-22		
- 501	MODREF34333	SOFTWARE INSTL-DFDAU	103106	1
		MODULE NUMBER:		
		226N1002-3510 REV A		
R - 505	998-2513-502	.SOFTWARE-DFDAU 429	108120	1
R		BROADCAST		
R		SUPPLIER CODE:		
R		V97896		
R		MISCELLANEOUS DATA:		
R		DISKETTE QTY : 1 DISK		
R		USED WITH:		
R		967-0212-002		
R		2233000-1A		
R		FOR SPARES PROCURE:		
R		963-2100-022		
R		V97896		

MISSING ITEM NUMBERS NOT APPLICABLE

- ITEM NOT ILLUSTRATED

BOEING PROPRIETARY - Copyright © - Unpublished Work - See title page for details.

	FIG ITEM	PART NUMBER	1 2 3 4 5 6 7 NOMENCLATURE	EFFECT FROM TO	UNITS PER ASSY
	8				
R	- 510	998-2512-502	.SOFTWARE-DFDAU MANDATORY	108120	1
R			SUPPLIER CODE:		
R			V97896		
R			MISCELLANEOUS DATA:		
R			DISKETTE QTY : 1 DISK		
R			USED WITH:		
R			967-0212-002		
R			2233000-1A		
R			FOR SPARES PROCURE:		
R			963-2000-022		
R			V97896		
	- 510	3105TDYM13-01	.SOFTWARE-DFDAU MANDATORY	103106	1
			SUPPLIER CODE:		
			V98571		
			USED WITH:		
			2233000-815-1		
			FOR SPARES PROCURE:		
			2237274-05		
			V98571		
R	- 515	998-2172-525	.SOFTWARE-ACMS SYS/APPS	108120	1
R			SUPPLIER CODE:		
R			V97896		
R			MISCELLANEOUS DATA:		
R			DISKETTE QTY : 1 DISK		
R			USED WITH:		
R			967-0212-002		
R			2233000-1A		
R			FOR SPARES PROCURE:		
R			963-2200-014		
R			V97896		

MISSING ITEM NUMBERS NOT APPLICABLE

– ITEM NOT ILLUSTRATED

BOEING PROPRIETARY - Copyright © - Unpublished Work - See title page for details.

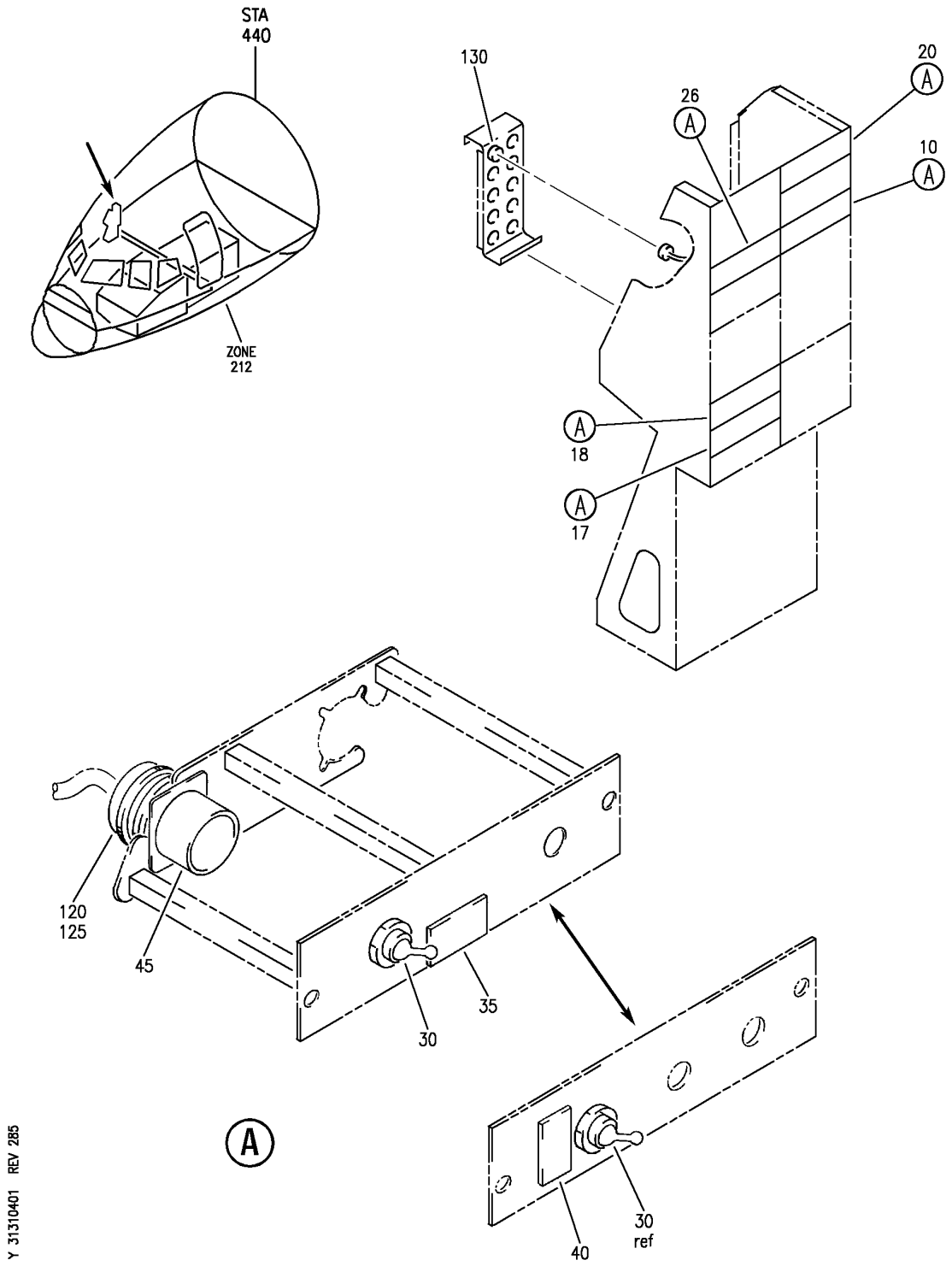

PANEL INSTL-P61 R SIDEWALL (FLIGHT DATA RECORDER SYSTEM ONLY)
FIGURE 1

BOEING PROPRIETARY - Copyright © - Unpublished Work - See title page for details.

FIG ITEM	PART NUMBER	1 2 3 4 5 6 7 NOMENCLATURE	EFFECT FROM TO	UNITS PER ASSY
1		PANEL INSTL-P61 R SIDEWALL (FLIGHT DATA RECORDER SYSTEM ONLY)	002004 006106 108903 950999	
- 1	233N7401-1	PANEL INSTL-P61 SIDEWALL (FLIGHT DATA RECORDER SYSTEM ONLY) POSITION DATA: R VARIABLE DRAWING REF: 233N7401-5004 233N7401-5036 233N7401-5038 233N7401-5042 FOR NHA/OTHER SYS DET SEE: 25-10-00-05A	002004 006100 121503 950999	RF
- 1	233N7403-158	PANEL INSTL-P61 SIDEWALL (FLIGHT DATA RECORDER SYSTEM ONLY) POSITION DATA: R FOR NHA/OTHER SYS DET SEE: 25-10-00-15B	108120	RF
- 3	233N7403-28	PANEL INSTL-P61 SIDEWALL (FLIGHT DATA RECORDER SYSTEM ONLY) POSITION DATA: R FOR NHA/OTHER SYS DET SEE: 25-10-00-15B	101101	RF
- 3	233N7403-117	PANEL INSTL-P61 SIDEWALL (FLIGHT DATA RECORDER SYSTEM ONLY) POSITION DATA: R FOR NHA/OTHER SYS DET SEE: 25-10-00-15B	504903	RF
- 4	233N7403-128	PANEL INSTL-P61 SIDEWALL (FLIGHT DATA RECORDER SYSTEM ONLY) POSITION DATA: R FOR NHA/OTHER SYS DET SEE: 25-10-00-15B	102102	RF

MISSING ITEM NUMBERS NOT APPLICABLE

- ITEM NOT ILLUSTRATED

BOEING PROPRIETARY - Copyright © - Unpublished Work - See title page for details.

FIG ITEM	PART NUMBER	1 2 3 4 5 6 7 NOMENCLATURE	EFFECT FROM TO	UNITS PER ASSY
1				
- 8	MODREF33342	PANEL INSTL- (FLIGHT DATA RECORDER SYSTEM ONLY) MODULE NUMBER: 233N7403-171 REV A FOR OTHER SYS DETAILS SEE: 11-32-01-98 21-58-51-04 22-21-51-01 23-41-52-01 24-22-73-02 26-18-53-02 26-21-52-01 26-22-52-01 26-23-52-03 27-23-51-02 28-41-51-04 29-22-52-01 30-11-52-01 30-41-51-04 31-14-16-87 31-41-53-01 31-51-51-01 34-12-54-01 34-21-51-02 34-46-51-05 34-61-53-03	103106	1
10	233N7508-14	.PANEL ASSY-FLIGHT RECORDER SVCE INTPH SUPPLIER CODE: V89954 ELECTRICAL EQUIP NUMBER: M00033 COMPONENT MAINT MANUAL REF: 31-31-52 OPTIONAL PART: 233N7508-7 V89954	002004 006100 121503 950999	RF
10	233N7508-7	.PANEL ASSY-FLIGHT RECORDER SVCE INTPH SUPPLIER CODE: V89954 ELECTRICAL EQUIP NUMBER: M00033 COMPONENT MAINT MANUAL REF: 31-31-52 OPTIONAL PART: 233N7508-14 V89954	002004 006100 121503 950999	RF

MISSING ITEM NUMBERS NOT APPLICABLE

- ITEM NOT ILLUSTRATED

BOEING PROPRIETARY - Copyright © - Unpublished Work - See title page for details.

FIG ITEM	PART NUMBER	1 2 3 4 5 6 7 NOMENCLATURE	EFFECT FROM TO	UNITS PER ASSY
1				
10	233N7508-9	.PANEL ASSY-FLIGHT RECORDER SVCE INTPH SUPPLIER CODE: V89954 ELECTRICAL EQUIP NUMBER: M00033 COMPONENT MAINT MANUAL REF: 31-31-52	002004 006100 121503 950999	RF
10	233N7508-14	.PANEL ASSY-FLIGHT RECORDER SVCE INTPH SUPPLIER CODE: V89954 ELECTRICAL EQUIP NUMBER: M00033 COMPONENT MAINT MANUAL REF: 31-31-52	101106 504903	RF
10	233N7508-9	.PANEL ASSY-FLIGHT RECORDER SVCE INTPH SUPPLIER CODE: V89954 ELECTRICAL EQUIP NUMBER: M00033 COMPONENT MAINT MANUAL REF: 31-31-52	101106 504903	RF
18	233N7508-14	.PANEL ASSY-FLIGHT RECORDER SVCE INTPH SUPPLIER CODE: V89954 ELECTRICAL EQUIP NUMBER: M00033 COMPONENT MAINT MANUAL REF: 31-31-52	108120	RF
18	233N7508-9	.PANEL ASSY-FLIGHT RECORDER SVCE INTPH SUPPLIER CODE: V89954 ELECTRICAL EQUIP NUMBER: M00033 COMPONENT MAINT MANUAL REF: 31-31-52	108120	RF
30	MS24658-31N	..SWITCH	002004 006106 108903 950999	1

MISSING ITEM NUMBERS NOT APPLICABLE

– ITEM NOT ILLUSTRATED

BOEING PROPRIETARY - Copyright © - Unpublished Work - See title page for details.

FIG ITEM	PART NUMBER	1 2 3 4 5 6 7 NOMENCLATURE	EFFECT FROM TO	UNITS PER ASSY
1				
35	BCREF8587	..LIGHT ASSY-OFF IND SUPPLIER CODE: V81590 OVERLENGTH PART NUMBER: 434-674-1031-2269 SPECIFICATION NUMBER: S231T300-2269 USED ON: 233N7508-7 233N7508-9 FOR DETAILS SEE: 33-14-70-02	002004 006106 108903 950999	1
35	BCREF6130	..LIGHT ASSY-OFF IND SUPPLIER CODE: V81590 OVERLENGTH PART NUMBER: 434-674-1005-1269 SPECIFICATION NUMBER: S231T300-1269 USED ON: 233N7508-7 233N7508-9 FOR DETAILS SEE: 33-14-70-02	002004 006106 108903 950999	1
35	BCREF8587	..LIGHT ASSY-OFF IND SUPPLIER CODE: V81590 OVERLENGTH PART NUMBER: 434-674-1031-2269 SPECIFICATION NUMBER: S231T300-2269 OPTIONAL PART: BCREF6130 V81590 USED ON: 233N7508-14 FOR DETAILS SEE: 33-14-70-02	002004 006106 108903 950999	1

MISSING ITEM NUMBERS NOT APPLICABLE

– ITEM NOT ILLUSTRATED

BOEING PROPRIETARY - Copyright © - Unpublished Work - See title page for details.

FIG ITEM	PART NUMBER	1 2 3 4 5 6 7 NOMENCLATURE	EFFECT FROM TO	UNITS PER ASSY
1				
35	BCREF6130	..LIGHT ASSY-OFF IND	002004	1
		SUPPLIER CODE:	006106	
		V81590	108903	
		OVERLENGTH PART NUMBER:	950999	
		434-674-1005-1269		
		SPECIFICATION NUMBER:		
		S231T300-1269		
		OPTIONAL PART:		
		BCREF8587		
		V81590		
		USED ON:		
		233N7508-14		
		FOR DETAILS SEE:		
		33-14-70-02		
45	BACC45FN16-24P	..CONNECTOR	002004	1
			006106	
			108903	
			950999	
		ATTACHING PARTS		
- 50	BACS12CB04-5	..SCREW-	002004	3
		USED ON:	006106	
		233N7508-7	108903	
		233N7508-9	950999	
		233N7508-20		
		233N7508-23		
- 50	NAS1801-04-5	..SCREW-	002004	3
		USED ON:	006106	
		233N7508-14	108903	
			950999	
- 55	K19798-04	..NUT	002004	3
		SUPPLIER CODE:	006106	
		V15653	108903	
		SPECIFICATION NUMBER:	950999	
		BACN10NW1		
		OPTIONAL PART:		
		RMA4812-160-40		
		V72962		
		293162		
		V60119		
		-------*-------		
- 100	286N0069-004	WIRE BUNDLE ASSY-	121503	RF
		REWORKED BY SB:	952999	
		34-0200		
- 100	286N0069-007	WIRE BUNDLE ASSY	002004	RF
			006100	
			950951	
- 101	286N0069-320	WIRE BUNDLE ASSY	504903	RF
- 101	286N0069-316	WIRE BUNDLE ASSY	101101	RF
- 101	286N0069-317	WIRE BUNDLE ASSY	102102	RF

MISSING ITEM NUMBERS NOT APPLICABLE

- ITEM NOT ILLUSTRATED

BOEING PROPRIETARY - Copyright © - Unpublished Work - See title page for details.

FIG ITEM	PART NUMBER	1 2 3 4 5 6 7 NOMENCLATURE	EFFECT FROM TO	UNITS PER ASSY
1				
- 102	286N0069-331	WIRE BUNDLE ASSY	108120	RF
- 103	286N0069-701	WIRE BUNDLE ASSY	103106	RF
120	BACC45FT16A24S	.CONNECTOR-	002004	1
		ELECTRICAL EQUIP NUMBER:	006106	
		D00009	108903	
		WIRING DIAGRAM REF:	950999	
		313111		
		313101		

MISSING ITEM NUMBERS NOT APPLICABLE

– ITEM NOT ILLUSTRATED

BOEING PROPRIETARY - Copyright © - Unpublished Work - See title page for details.

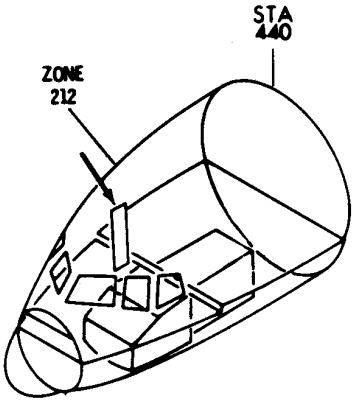

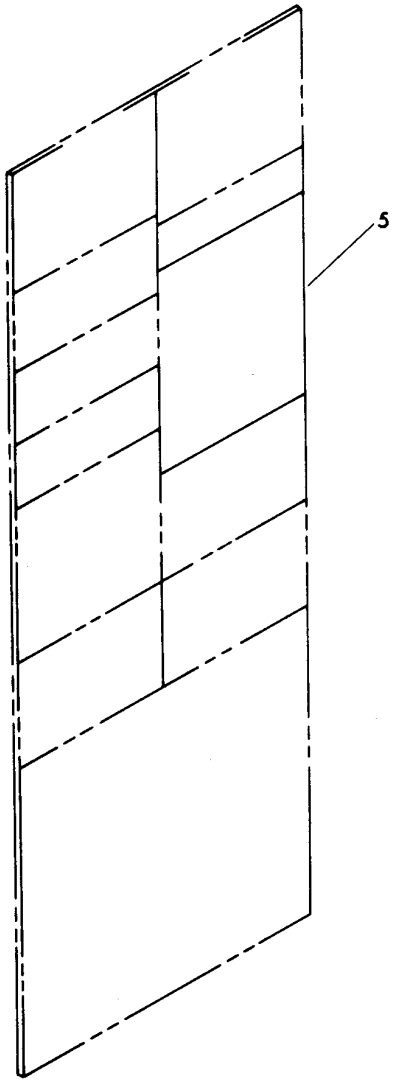

Y 31310601 SMT 1 REV 012

PANEL INSTL-P61 R SIDEWALL (FLIGHT DATA ENTRY PANEL/DATA MANAGEMENT ENTRY PANEL ONLY)
FIGURE 1

BOEING PROPRIETARY - Copyright © - Unpublished Work - See title page for details.

	FIG ITEM	PART NUMBER	1 2 3 4 5 6 7 NOMENCLATURE	EFFECT FROM TO	UNITS PER ASSY
	1				
			PANEL INSTL-P61 R SIDEWALL (FLIGHT DATA ENTRY PANEL/DATA MANAGEMENT ENTRY PANEL ONLY)	904949	
-	1	233N7401-1	PANEL INSTL-P61 SIDEWALL (FLIGHT DATA ENTRY PANEL/DATA MANAGEMENT ENTRY PANEL ONLY) POSITION DATA: R VARIABLE DRAWING REF: 233N7401-5004 FOR NHA/OTHER SYS DET SEE: 25-10-00-05A	904949	RF
R	5	2227050-2	.PANEL ASSY-FLIGHT DATA ENTRY	904949	1
R			SUPPLIER CODE: V98571		
R			ELECTRICAL EQUIP NUMBER: M10301		
R			COMPONENT MAINT MANUAL REF: 31-32-21		
R					
R					
R					

MISSING ITEM NUMBERS NOT APPLICABLE

- ITEM NOT ILLUSTRATED

BOEING PROPRIETARY - Copyright © - Unpublished Work - See title page for details.

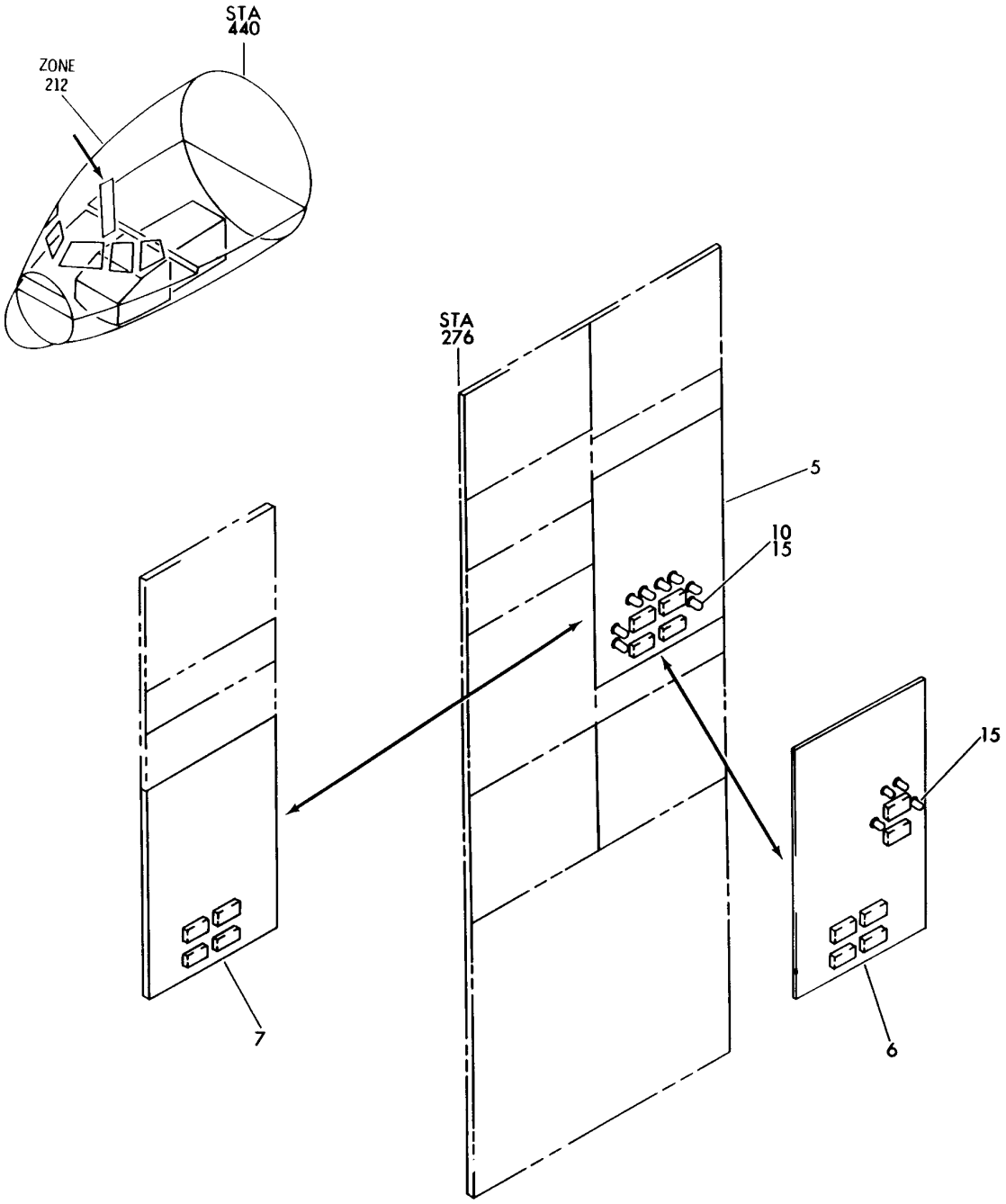

Y 31310602 REV 117

PANEL INSTL-P61 SIDEWALL (FLIGHT DATA ENTRY PANEL ONLY)
FIGURE 2

BOEING PROPRIETARY - Copyright © - Unpublished Work - See title page for details.

	FIG ITEM	PART NUMBER	1 2 3 4 5 6 7 NOMENCLATURE	EFFECT FROM TO	UNITS PER ASSY
	2				
			PANEL INSTL-P61 SIDEWALL (FLIGHT DATA ENTRY PANEL ONLY)	107107	
	- 1	233N7401-1	PANEL INSTL-P61 (FLIGHT DATA ENTRY PANEL ONLY) POSITION DATA: R SIDEWALL VARIABLE DRAWING REF: 233N7401-5005 FOR NHA/OTHER SYS DET SEE: 25-10-00-05A	107107	RF
R	5	775111-10-001	.PANEL ASSY-FLIGHT DATA ENTRY	107107	1
R			SUPPLIER CODE: V98571		
R			SPECIFICATION NUMBER: S283T021-1		
R			ELECTRICAL EQUIP NUMBER: M10301		
R			COMPONENT MAINT MANUAL REF: 31-31-15		
R					
R					
R					
R					
	10	MS25237-387	..LAMP	107107	8

MISSING ITEM NUMBERS NOT APPLICABLE

- ITEM NOT ILLUSTRATED

BOEING PROPRIETARY - Copyright © - Unpublished Work - See title page for details.

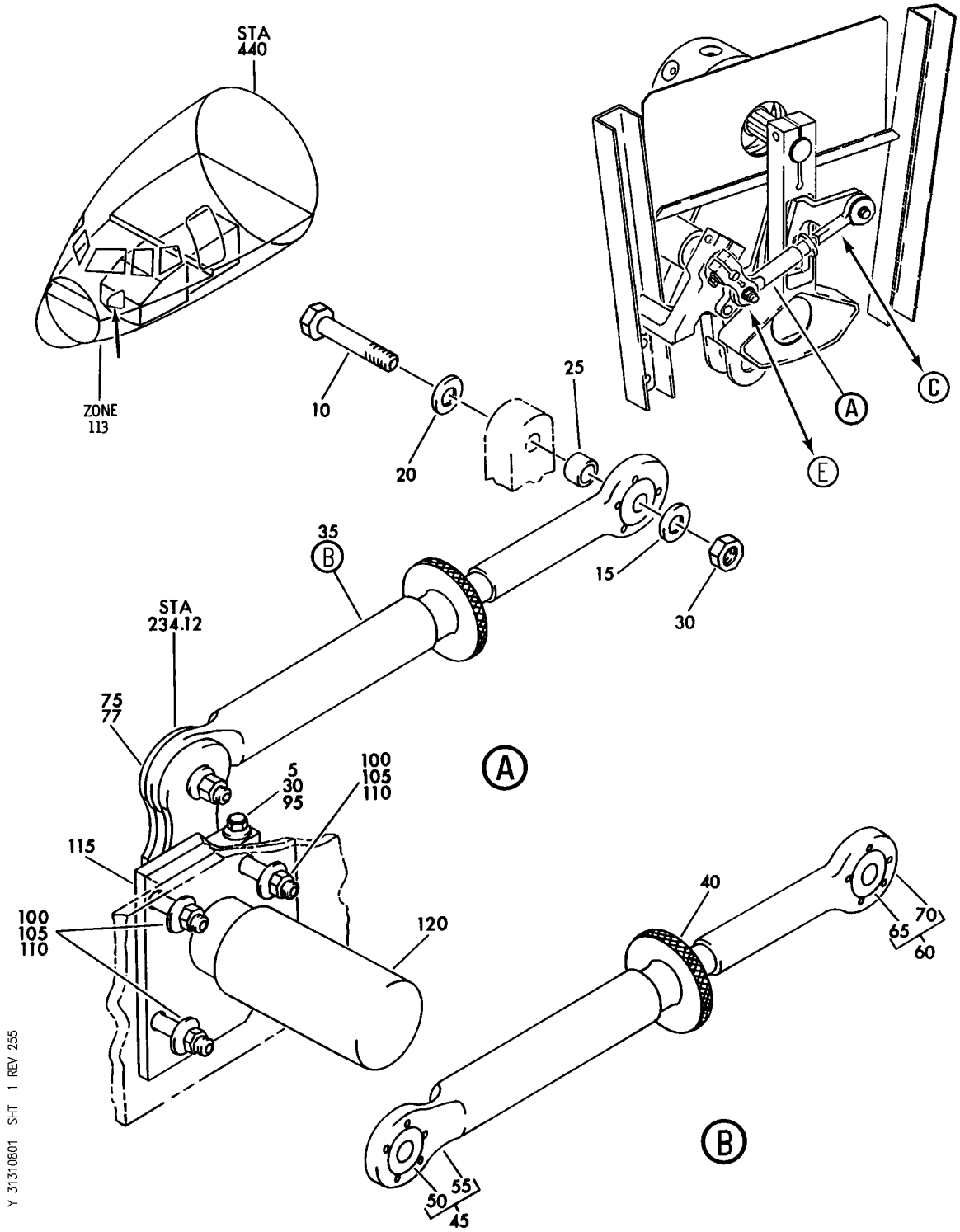

SENSOR AND MODIFICATION INSTL-CONTROL COLUMN
FIGURE 1 (SHEET 1)

BOEING PROPRIETARY - Copyright © - Unpublished Work - See title page for details.

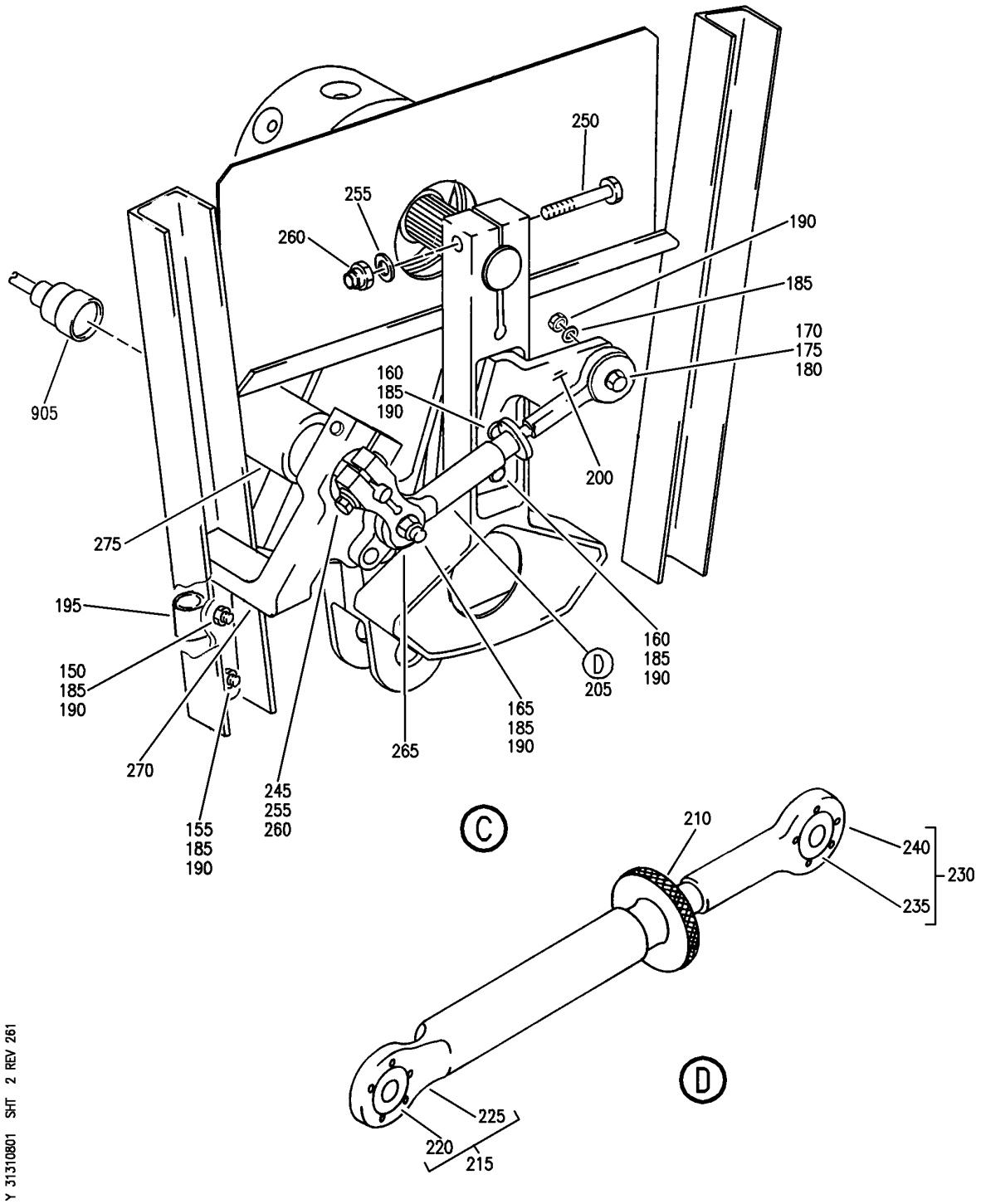

SENSOR AND MODIFICATION INSTL-CONTROL COLUMN
FIGURE 1 (SHEET 2)

BOEING PROPRIETARY - Copyright © - Unpublished Work - See title page for details.

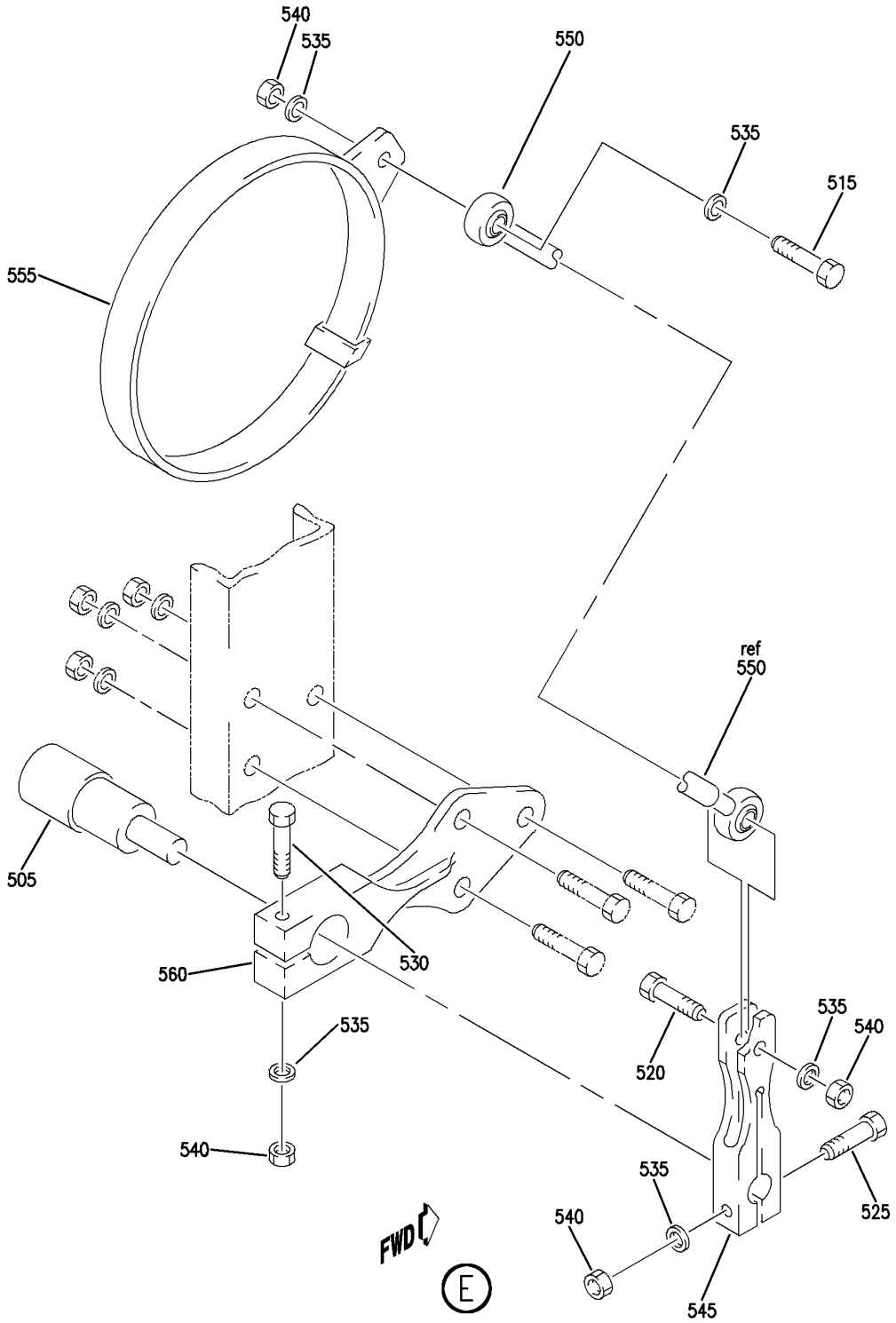

SENSOR AND MODIFICATION INSTL-CONTROL COLUMN
FIGURE 1 (SHEET 3)

BOEING PROPRIETARY - Copyright © - Unpublished Work - See title page for details.

FIG ITEM	PART NUMBER	1 2 3 4 5 6 7 NOMENCLATURE	EFFECT FROM TO	UNITS PER ASSY
1		SENSOR AND MODIFICATION INSTL-CONTROL COLUMN	002004 006106 108903 950999	
- 1	251N1416-2	SENSOR INSTL-CONTROL COLUMN FOR NHA SEE: 27-31-00-02 27-00-00-22	002004 006102 108903 950999	RF
- 1	MODREF7154	SENSOR INSTL-CONTROL COLUMN MODULE NUMBER: 251N1416-2 REV A	103106	1
- 3	251N1416-3	SENSOR INSTL-CONTROL COLUMN FOR NHA SEE: 27-00-00-22	108120	RF
- 3	MODREF7235	SENSOR INSTL-CONTROL COLUMN MODULE NUMBER: 251N1416-3 REV A	103106	1
5	NAS623-3-7	.SCREW-	002004 006102 108903 950999	1
5	NAS623-3-7	.SCREW	103106 108120	1
10	NAS6703-11	.BOLT	002004 006102 121903 950999	1
10	NAS6703-11	.BOLT	103106 108120	1
15	AN960JD10	.WASHER	002004 006102 121903 950999	1
15	AN960JD10	.WASHER	103106 108120	1
20	AN970-3	.WASHER	002004 006102 121903 950999	1
20	AN970-3	.WASHER	103106 108120	1
25	NAS43DD3-9	.SPACER	002004 006102 121903 950999	1
25	NAS43DD3-9	.SPACER	103106 108120	1

MISSING ITEM NUMBERS NOT APPLICABLE

- ITEM NOT ILLUSTRATED

BOEING PROPRIETARY - Copyright © - Unpublished Work - See title page for details.

FIG ITEM	PART NUMBER	1 2 3 4 5 6 7 NOMENCLATURE	EFFECT FROM TO	UNITS PER ASSY
1				
30	MS21042L3	.NUT	002004 006102 121903 950999	2
30	MS21042L3	.NUT	103106 108120	2
35	69-43490-11	.ROD ASSY-	002004 006102 121903 950999	1
35	69-43490-11	.ROD ASSY-	103106 108120	1
40	69-43493-1	..NUT-THUMB	002004 006102 121903 950999	1
40	69-43493-1	..NUT-THUMB	103106 108120	1
45	69-43491-1	..END ASSY-ROD	002004 006102 121903 950999	1
45	69-43491-1	..END ASSY-ROD	103106 108120	1
50	KSP3LFS428	...BEARING SUPPLIER CODE: V21335 SPECIFICATION NUMBER: BACB10AC3L OPTIONAL PART: HHKSP3L V38443 KSP3LE9440A V21335 KSP3L2TS V43991 KSP3LG27 V30163	002004 006102 121903 950999	1

MISSING ITEM NUMBERS NOT APPLICABLE

– ITEM NOT ILLUSTRATED

BOEING PROPRIETARY - Copyright © - Unpublished Work - See title page for details.

FIG ITEM	PART NUMBER	1 2 3 4 5 6 7 NOMENCLATURE	EFFECT FROM TO	UNITS PER ASSY
1				
50	KSP3LFS428	...BEARING SUPPLIER CODE: V21335 SPECIFICATION NUMBER: BACB10AC3L OPTIONAL PART: HHKSP3L V38443 KSP3LE9440A V21335 KSP3L2TS V43991 KSP3LG27 V30163	103106 108120	1
55	69-43491-2	...END-ROD	002004 006102 121903 950999	1
55	69-43491-2	...END-ROD	103106 108120	1
60	69-43492-13	..END ASSY-ROD	002004 006102 121903 950999	1
60	69-43492-13	..END ASSY-ROD	103106 108120	1
65	KSP3LFS428	...BEARING SUPPLIER CODE: V21335 SPECIFICATION NUMBER: BACB10AC3L OPTIONAL PART: HHKSP3L V38443 KSP3LE9440A V21335 KSP3L2TS V43991 KSP3LG27 V30163	002004 006102 121903 950999	1

MISSING ITEM NUMBERS NOT APPLICABLE

– ITEM NOT ILLUSTRATED

BOEING PROPRIETARY - Copyright © - Unpublished Work - See title page for details.

FIG ITEM	PART NUMBER	1 2 3 4 5 6 7 NOMENCLATURE	EFFECT FROM TO	UNITS PER ASSY
1				
65	KSP3LFS428	...BEARING	103106	1
		SUPPLIER CODE:	108120	
		V21335		
		SPECIFICATION NUMBER:		
		BACB10AC3L		
		OPTIONAL PART:		
		HHKSP3L		
		V38443		
		KSP3LE9440A		
		V21335		
		KSP3L2TS		
		V43991		
		KSP3LG27		
		V30163		
70	69-43492-14	...END-ROD	002004	1
			006102	
			121903	
			950999	
70	69-43492-14	...END-ROD	103106	1
			108120	
75	251N1011-1	.CRANK-ARM	002004	1
			006102	
			121903	
			950999	
75	251N1011-1	.CRANK-ARM	103106	1
			108120	
		ATTACHING PARTS		
- 80	NAS623-3-12	.SCREW	002004	1
			006102	
			121903	
			950999	
- 80	NAS623-3-12	.SCREW	103106	1
			108120	
- 85	AN960JD10	.WASHER	002004	1
			006102	
			121903	
			950999	
- 85	AN960JD10	.WASHER	103106	1
			108120	
- 90	MS1042L3	.NUT	103106	1
			108120	
- 90	MS21042L3	.NUT	002004	1
			006102	
			121903	
			950999	
		-------*-------		

MISSING ITEM NUMBERS NOT APPLICABLE

- ITEM NOT ILLUSTRATED

BOEING PROPRIETARY - Copyright © - Unpublished Work - See title page for details.

FIG ITEM	PART NUMBER	1 2 3 4 5 6 7 NOMENCLATURE	EFFECT FROM TO	UNITS PER ASSY
1				
95	NAS1801-3-20	.SCREW	002004 006102 121903 950999	1
95	NAS1801-3-20	.SCREW-HEX HEAD	103106 108120	1
100	NAS623-3-9	.SCREW	002004 006102 121903 950999	3
100	NAS623-3-9	.SCREW	103106 108120	3
105	AN960JD10	.WASHER	002004 006102 121903 950999	3
105	AN960JD10	.WASHER	103106 108120	3
110	MS21042L3	.NUT	002004 006102 121903 950999	3
110	MS21042L3	.NUT	103106 108120	3
115	69-42963-2	.BRACKET-COLLAR	002004 006102 121903 950999	1
115	69-42963-7	.BRACKET-COLLAR USED ON: 251N1416-3 MODREF7235	103106 108120	1
120	H505B	.TRANSMITTER ASSY- SUPPLIER CODE: V33463 FUNCTIONAL DESCRIPTION: PROVIDES ELECTRICAL SIGNALS CORRESPONDING TO CONTROL SURFACE MOVEMENT SPECIFICATION NUMBER: S250N104-4 COMPONENT MAINT MANUAL REF: 27-01-07 OPTIONAL PART: ZR1A V51761	002004 006102 121903 950999	1

MISSING ITEM NUMBERS NOT APPLICABLE

– ITEM NOT ILLUSTRATED

BOEING PROPRIETARY - Copyright © - Unpublished Work - See title page for details.

FIG ITEM	PART NUMBER	1 2 3 4 5 6 7 NOMENCLATURE	EFFECT FROM TO	UNITS PER ASSY
1				
120	ZR1A	.TRANSMITTER ASSY- SUPPLIER CODE: V51761 FUNCTIONAL DESCRIPTION: PROVIDES ELECTRICAL SIGNALS CORRESPONDING TO CONTROL SURFACE MOVEMENT SPECIFICATION NUMBER: S250N104-4 COMPONENT MAINT MANUAL REF: 27-01-07 OPTIONAL PART: H505B V33463	002004 006102 121903 950999	1
120	H505B	.TRANSMITTER ASSY- SUPPLIER CODE: V33463 FUNCTIONAL DESCRIPTION: PROVIDES ELECTRICAL SIGNALS CORRESPONDING TO CONTROL SURFACE MOVEMENT SPECIFICATION NUMBER: S250N104-4 COMPONENT MAINT MANUAL REF: 27-01-07 OPTIONAL PART: ZR1A V51761	103106 108120	1
120	ZR1A	.TRANSMITTER ASSY- SUPPLIER CODE: V51761 FUNCTIONAL DESCRIPTION: PROVIDES ELECTRICAL SIGNALS CORRESPONDING TO CONTROL SURFACE MOVEMENT SPECIFICATION NUMBER: S250N104-4 COMPONENT MAINT MANUAL REF: 27-01-07 OPTIONAL PART: H505B V33463	103106 108120	1

MISSING ITEM NUMBERS NOT APPLICABLE

– ITEM NOT ILLUSTRATED

BOEING PROPRIETARY - Copyright © - Unpublished Work - See title page for details.

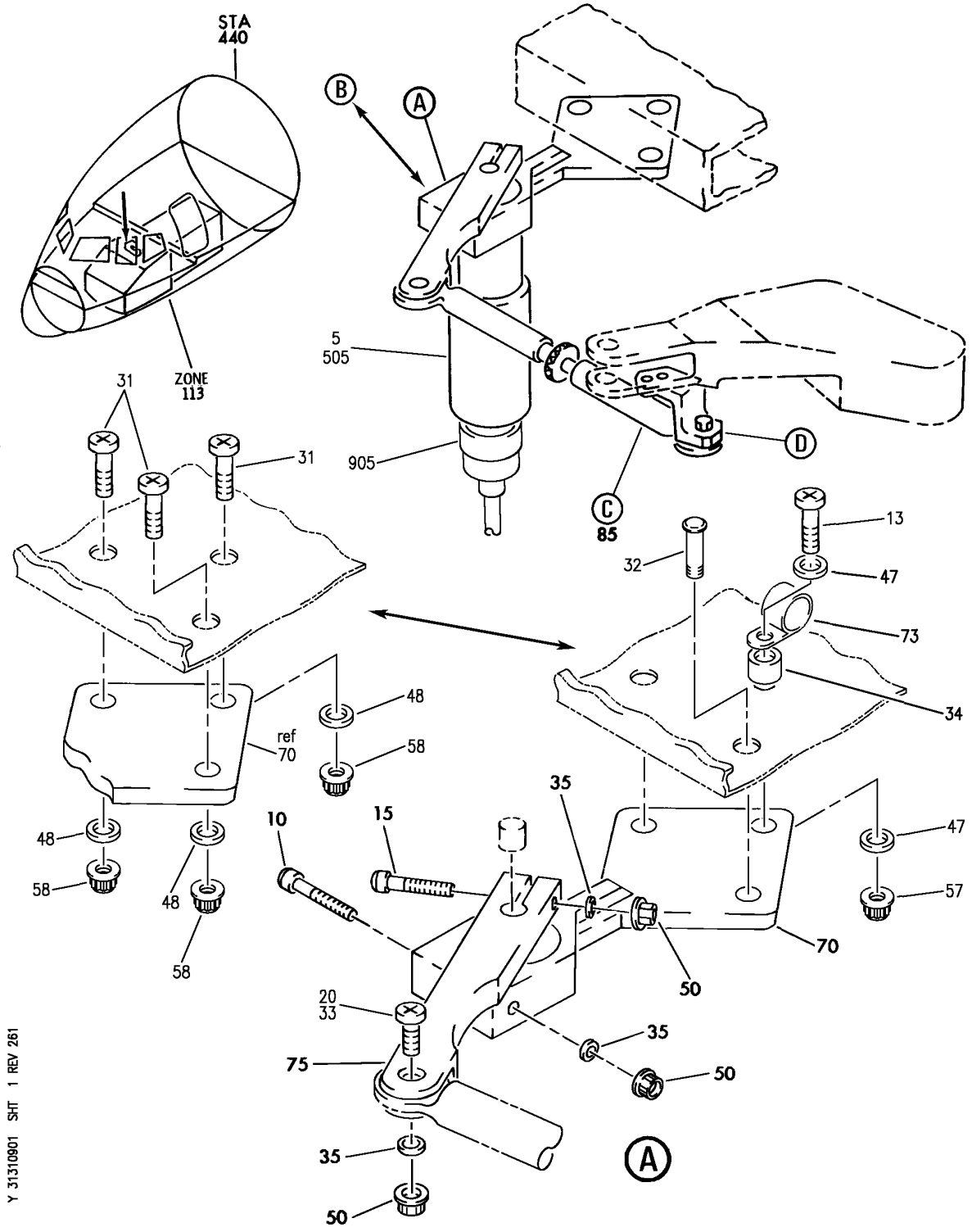

SENSOR AND MODIFICATION INSTL- CONT WHEEL FLT DATA RECORDER
FIGURE 1 (SHEET 1)

BOEING PROPRIETARY - Copyright © - Unpublished Work - See title page for details.

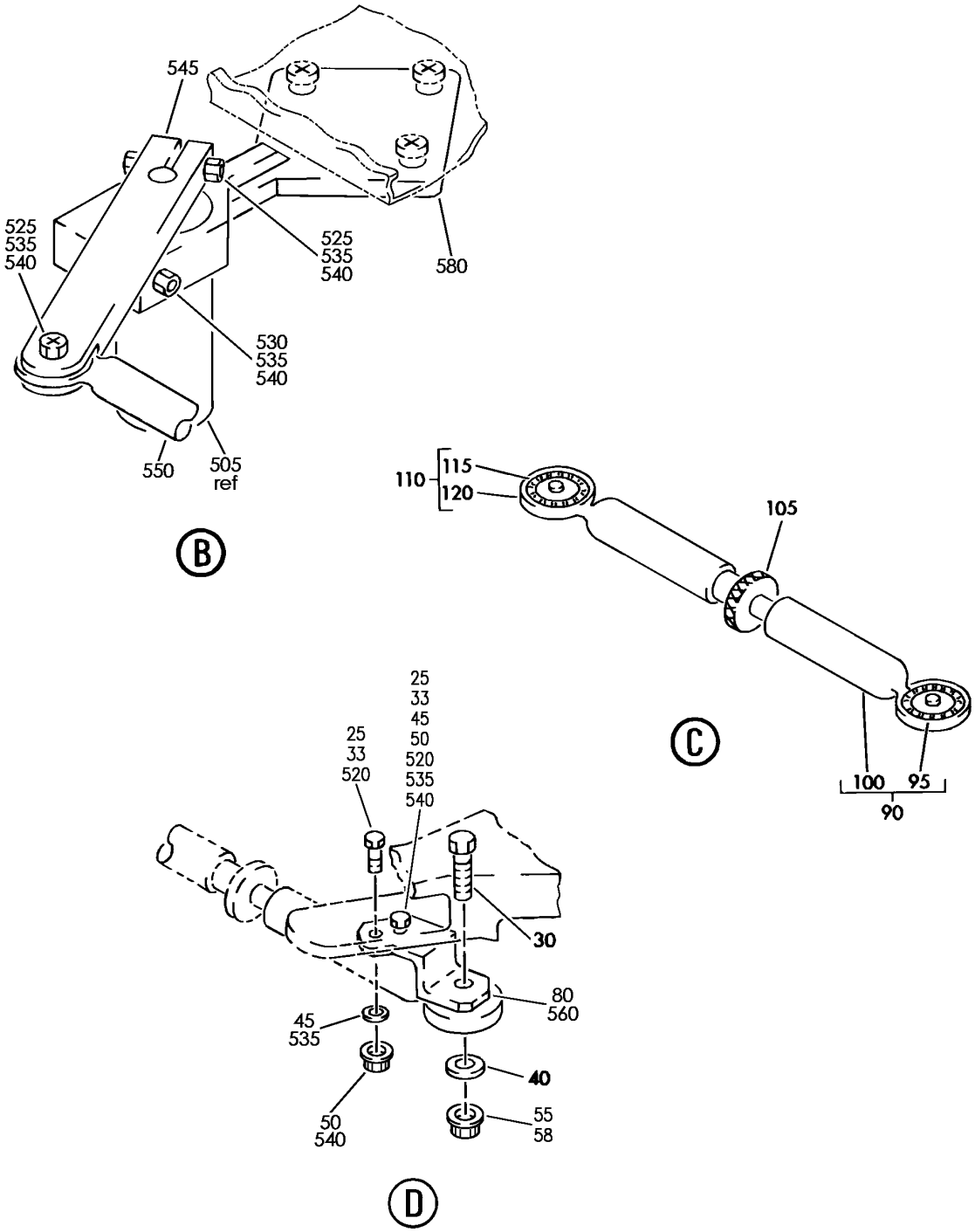

Y 31310901 SHT 2 REV 255

SENSOR AND MODIFICATION INSTL- CONT WHEEL FLT DATA RECORDER
FIGURE 1 (SHEET 2)

BOEING PROPRIETARY - Copyright © - Unpublished Work - See title page for details.

FIG ITEM	PART NUMBER	1 2 3 4 5 6 7 NOMENCLATURE	EFFECT FROM TO	UNITS PER ASSY
1		SENSOR AND MODIFICATION INSTL- CONT WHEEL FLT DATA RECORDER	002004 006106 108903 950999	
- 1	251N1434-2	SENSOR INSTL-CONT WHEEL FLT DATA RECORDER POSITION DATA: LH FOR NHA SEE: 27-00-00-02 27-00-00-01	002004 006102 121903 950999	RF
- 1	MODREF7236	SENSOR INSTL-CONT WHEEL FLT DATA RECORDER MODULE NUMBER: 251N1434-2 REV A	103103	1
- 1	MODREF27500	SENSOR INSTL-CONT WHEEL FLT DATA RECORDER MODULE NUMBER: 251N1434-2 REV B POSITION DATA: LH	104106	1
- 3	251N1434-3	SENSOR INSTL-CONT WHEEL FLT DATA RECORDER POSITION DATA: RH PRE SERVICE BULLETIN: 27A0146 FOR NHA SEE: 27-00-00-01	108120	RF
- 3	MODREF7237	SENSOR INSTL-CONT WHEEL FLT DATA RECORDER MODULE NUMBER: 251N1434-3 REV A POSITION DATA: RH PRE SERVICE BULLETIN: 27A0146	103103	1

MISSING ITEM NUMBERS NOT APPLICABLE

- ITEM NOT ILLUSTRATED

BOEING PROPRIETARY - Copyright © - Unpublished Work - See title page for details.

FIG ITEM	PART NUMBER	1 2 3 4 5 6 7 NOMENCLATURE	EFFECT FROM TO	UNITS PER ASSY
1				
- 3	MODREF27501	SENSOR INSTL-CONT WHEEL FLT DATA RECORDER MODULE NUMBER: 251N1434-3 REV B POSITION DATA: RH PRE SERVICE BULLETIN: 27A0146	104105	1
5	H505B	.TRANSMITTER ASSY- SUPPLIER CODE: V33463 FUNCTIONAL DESCRIPTION: PROVIDES ELECTRICAL SIGNALS CORRESPONDING TO CONTROL SURFACE MOVEMENT SPECIFICATION NUMBER: S250N104-4 ELECTRICAL EQUIP NUMBER: TS5301 COMPONENT MAINT MANUAL REF: 27-01-07 OPTIONAL PART: ZR1A V51761	002004 006102 121903 950999	1
5	ZR1A	.TRANSMITTER ASSY- SUPPLIER CODE: V51761 FUNCTIONAL DESCRIPTION: PROVIDES ELECTRICAL SIGNALS CORRESPONDING TO CONTROL SURFACE MOVEMENT SPECIFICATION NUMBER: S250N104-4 ELECTRICAL EQUIP NUMBER: TS5301 COMPONENT MAINT MANUAL REF: 27-01-07 OPTIONAL PART: H505B V33463	002004 006102 121903 950999	1

MISSING ITEM NUMBERS NOT APPLICABLE

- ITEM NOT ILLUSTRATED

BOEING PROPRIETARY - Copyright © - Unpublished Work - See title page for details.

FIG ITEM	PART NUMBER	1 2 3 4 5 6 7 NOMENCLATURE	EFFECT FROM TO	UNITS PER ASSY
1				
5	H505B	.TRANSMITTER ASSY- SUPPLIER CODE: V33463 FUNCTIONAL DESCRIPTION: PROVIDES ELECTRICAL SIGNALS CORRESPONDING TO CONTROL SURFACE MOVEMENT SPECIFICATION NUMBER: S250N104-4 ELECTRICAL EQUIP NUMBER: TS5301 COMPONENT MAINT MANUAL REF: 27-01-07 OPTIONAL PART: ZR1A V51761	103106 108120	1
5	ZR1A	.TRANSMITTER ASSY- SUPPLIER CODE: V51761 FUNCTIONAL DESCRIPTION: PROVIDES ELECTRICAL SIGNALS CORRESPONDING TO CONTROL SURFACE MOVEMENT SPECIFICATION NUMBER: S250N104-4 ELECTRICAL EQUIP NUMBER: TS5301 COMPONENT MAINT MANUAL REF: 27-01-07 OPTIONAL PART: H505B V33463	103106 108120	1
10	NAS623-3-20	.SCREW	002004 006102 121903 950999	1
10	NAS623-3-20	.SCREW	103106 108120	1
15	NAS623-3-12	.SCREW	002004 006102 121903 950999	1
15	NAS623-3-12	.SCREW	103106 108120	1
20	BACB30LU3-8	.BOLT	103106 108120	1

MISSING ITEM NUMBERS NOT APPLICABLE

— ITEM NOT ILLUSTRATED

BOEING PROPRIETARY - Copyright © - Unpublished Work - See title page for details.

FIG ITEM	PART NUMBER	1 2 3 4 5 6 7 NOMENCLATURE	EFFECT FROM TO	UNITS PER ASSY
1				
20	BACB30LU3-8	.BOLT-	002004 006102 121903 950999	1
25	HST10AG6-5	.BOLT- SUPPLIER CODE: V0PTK6 SPECIFICATION NUMBER: BACB30VT6K5 OPTIONAL PART: HST10AG6-5 V06725 HST10AG6-5 V56878 HST10AG6-5 V73197 WC10K6-5 V60516	002004 006102 121903 950999	2
25	HST10AG6-5	.BOLT SUPPLIER CODE: V0PTK6 SPECIFICATION NUMBER: BACB30VT6K5 OPTIONAL PART: HST10AG6-5 V06725 HST10AG6-5 V56878 HST10AG6-5 V73197 WC10K6-5 V60516	103106 108120	2
30	BACB30NF5-8	.BOLT-	002004 006102 121903 950999	1
30	BACB30NF5-8	.BOLT	103106 108120	1
35	AN960JD10	.WASHER-	002004 006102 121903 950999	3
35	AN960JD10	.WASHER	103106 108120	3
40	BACW10P16S	.WASHER	103106 108120	1

MISSING ITEM NUMBERS NOT APPLICABLE

— ITEM NOT ILLUSTRATED

BOEING PROPRIETARY - Copyright © - Unpublished Work - See title page for details.

FIG ITEM	PART NUMBER	1 2 3 4 5 6 7 NOMENCLATURE	EFFECT FROM TO	UNITS PER ASSY
1				
40	BACW10P16S	.WASHER-	002004 006102 121903 950999	1
45	AN960JD10L	.WASHER	002004 006102 121903 950999	2
45	AN960JD10L	.WASHER	103106 108120	2
50	MS21042L3	.NUT	002004 006102 121903 950999	5
50	MS21042L3	.NUT	103106 108120	5
55	MS21042L5	.NUT-	002004 006102 121903 950999	1
55	MS21042L5	.NUT	103106 108120	1
75	251N1431-1	.ARM ASSY	002004 006106 121903 950999	1
75	251N1431-2	.ARM CRANK- USED ON: 251N1434-3 MODREF7236 MODREF27500	103106 108120	1
80	251N1430-1	.BRACKET-	002004 006106 121903 950999	1
80	251N1430-2	.BRACKET- USED ON: 251N1434-3 MODREF7236 MODREF27500	103106 108120	1
85	69-43490-2	.ROD ASSY	002004 006102 121903 950999	1
85	69-43490-2	.ROD ASSY	103106 108120	1
90	69-43494-1	..END ASSY-MALE	103106 108120	1

MISSING ITEM NUMBERS NOT APPLICABLE

— ITEM NOT ILLUSTRATED

BOEING PROPRIETARY - Copyright © - Unpublished Work - See title page for details.

FIG ITEM	PART NUMBER	1 2 3 4 5 6 7 NOMENCLATURE	EFFECT FROM TO	UNITS PER ASSY
1				
90	69-43494-1	..END ASSY-MALE	002004 006102 121903 950999	1
95	KSP5AFS428	...BEARING SUPPLIER CODE: V21335 SPECIFICATION NUMBER: BACB10AC5A OPTIONAL PART: HHKSP5A V38443 KSP5AE9440A V21335 KSP5A2TS V43991 KSP5AG27 V30163 KSP5ASD610 V83086	002004 006102 121903 950999	1
95	KSP5AFS428	...BEARING SUPPLIER CODE: V21335 SPECIFICATION NUMBER: BACB10AC5A OPTIONAL PART: HHKSP5A V38443 KSP5AE9440A V21335 KSP5A2TS V43991 KSP5AG27 V30163 KSP5ASD610 V83086	103106 108120	1
100	69-43494-2	...END	002004 006102 121903 950999	1
100	69-43494-2	...END	103106 108120	1
105	69-43493-1	..NUT	002004 006102 121903 950999	1
105	69-43493-1	..NUT	103106 108120	1

MISSING ITEM NUMBERS NOT APPLICABLE

– ITEM NOT ILLUSTRATED

BOEING PROPRIETARY - Copyright © - Unpublished Work - See title page for details.

FIG ITEM	PART NUMBER	1 2 3 4 5 6 7 NOMENCLATURE	EFFECT FROM TO	UNITS PER ASSY
1				
110	69-43491-1	..END ASSY	002004 006102 121903 950999	1
110	69-43491-1	..END ASSY	103106 108120	1
115	KSP3LFS428	...BEARING SUPPLIER CODE: V21335 SPECIFICATION NUMBER: BACB10AC3L OPTIONAL PART: HHKSP3L V38443 KSP3LE9440A V21335 KSP3L2TS V43991 KSP3LG27 V30163	002004 006102 121903 950999	1
115	KSP3LFS428	...BEARING SUPPLIER CODE: V21335 SPECIFICATION NUMBER: BACB10AC3L OPTIONAL PART: HHKSP3L V38443 KSP3LE9440A V21335 KSP3L2TS V43991 KSP3LG27 V30163	103106 108120	1
120	69-43491-2	...END	002004 006102 121903 950999	1
120	69-43491-2	...END	103106 108120	1

MISSING ITEM NUMBERS NOT APPLICABLE

– ITEM NOT ILLUSTRATED

BOEING PROPRIETARY - Copyright © - Unpublished Work - See title page for details.

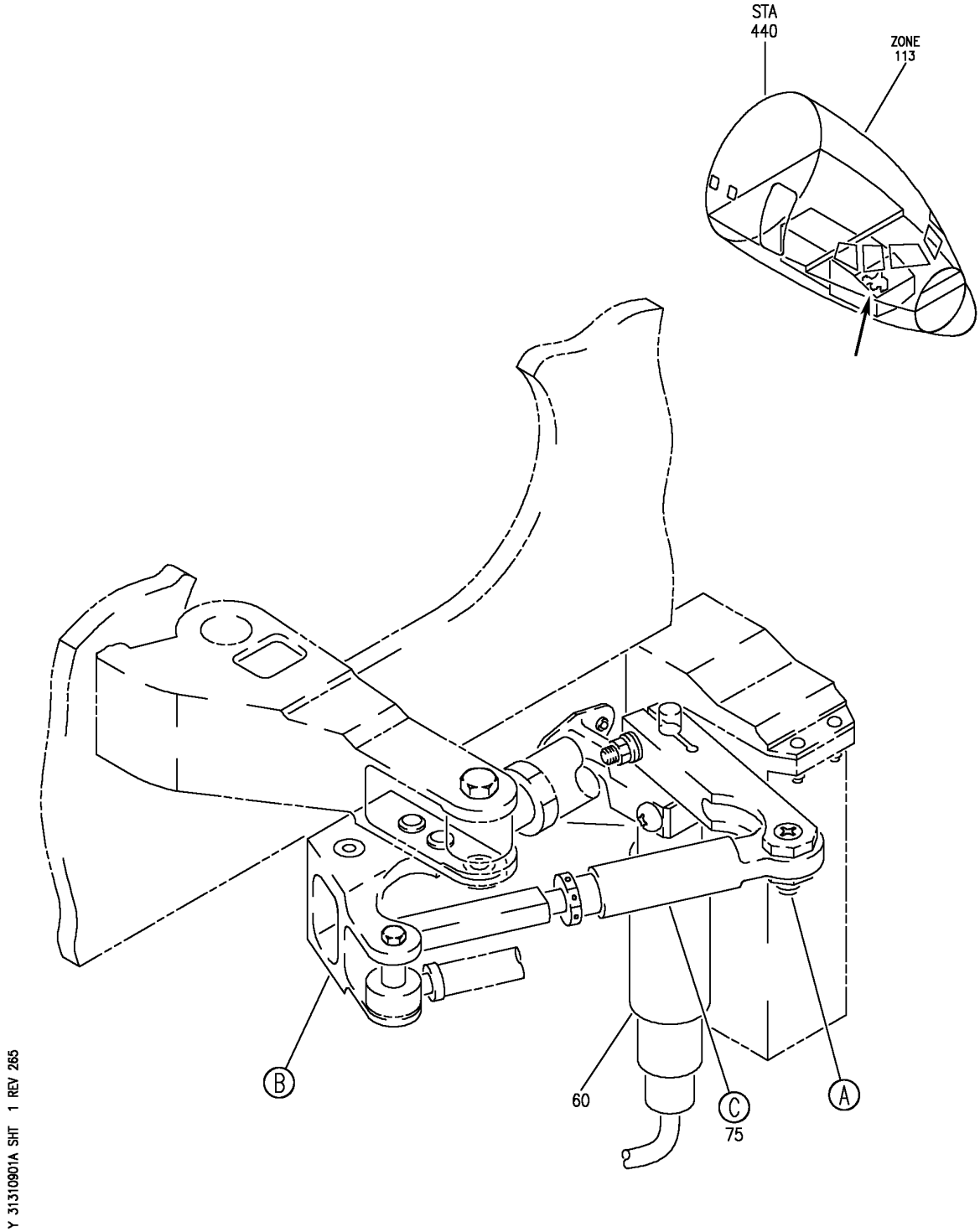

SENSOR INSTL-CONT WHEEL FLT DATA RECORDER
FIGURE 1A (SHEET 1)

BOEING PROPRIETARY - Copyright © - Unpublished Work - See title page for details.

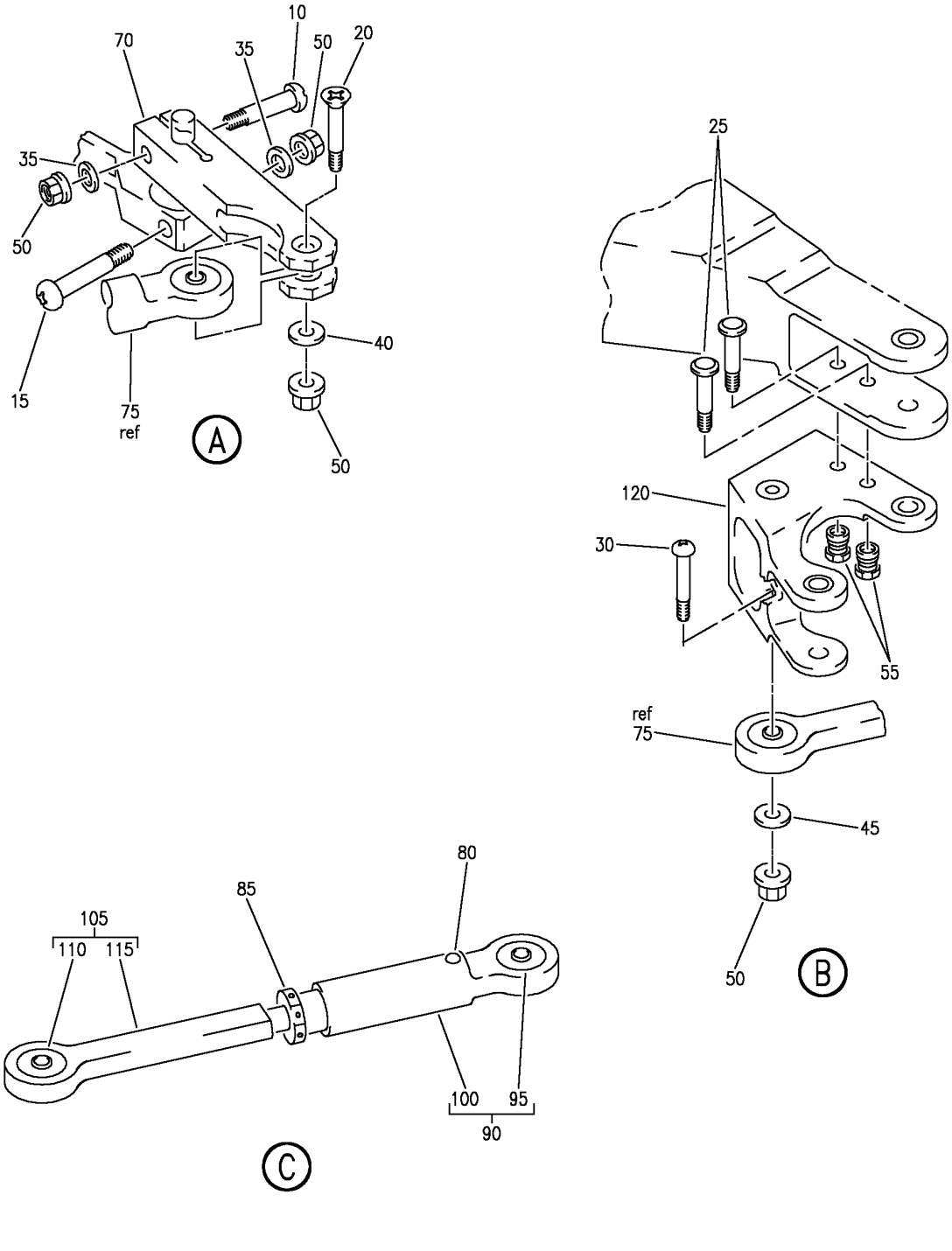

SENSOR INSTL-CONT WHEEL FLT DATA RECORDER
FIGURE 1A (SHEET 2)

BOEING PROPRIETARY - Copyright © - Unpublished Work - See title page for details.

FIG ITEM	PART NUMBER	1 2 3 4 5 6 7 NOMENCLATURE	EFFECT FROM TO	UNITS PER ASSY
1A				
		SENSOR INSTL-CONT WHEEL	106106	
		FLT DATA RECORDER		
- 1	MODREF100270	SENSOR INSTL-CONT WHEEL	106106	1
		FLT DATA RECORDER		
		MODULE NUMBER:		
		251N1434-4 REV A		
10	BACB30ZG3-12	.BOLT	106106	1
15	BACB30ZG3-20	.BOLT	106106	1
20	BACB30LH3-7	.BOLT	106106	1
25	HST10AG6-5	.BOLT	106106	2
		SUPPLIER CODE:		
		V0PTK6		
		SPECIFICATION NUMBER:		
		BACB30VT6K5		
		OPTIONAL PART:		
		HST10AG6-5		
		V06725		
		HST10AG6-5		
		V56878		
		HST10AG6-5		
		V73197		
		WC10K6-5		
		V60516		
30	BACB30LK3-6	.BOLT	106106	1
35	NAS1149D0363J	.WASHER	106106	2
40	NAS1149D0332J	.WASHER	106106	1
45	BACW10P6AL	.WASHER	106106	1
50	PLH53CD	.NUT	106106	4
		SUPPLIER CODE:		
		VF0224		
		SPECIFICATION NUMBER:		
		BACN10YR3CD		
		OPTIONAL PART:		
		H52732-3CD		
		V15653		
55	BACC30BL6	.COLLAR	106106	2
		SUPPLIER CODE:		
		V73197		
		SPECIFICATION NUMBER:		
		BACC30BL6		
		OPTIONAL PART:		
		HST79-6		
		V92215		
		HST79CY6		
		V56878		
		HST79CY6		
		V5M902		

MISSING ITEM NUMBERS NOT APPLICABLE

- ITEM NOT ILLUSTRATED

BOEING PROPRIETARY - Copyright © - Unpublished Work - See title page for details.

FIG ITEM	PART NUMBER	1 2 3 4 5 6 7 NOMENCLATURE	EFFECT FROM TO	UNITS PER ASSY
1A				
60	H505B	.TRANSMITTER ASSY-	106106	1
		SUPPLIER CODE:		
		V33463		
		FUNCTIONAL DESCRIPTION:		
		PROVIDES ELECTRICAL		
		SIGNALS CORRESPONDING TO		
		CONTROL SURFACE MOVEMENT		
		SPECIFICATION NUMBER:		
		S250N104-4		
		COMPONENT MAINT MANUAL REF:		
		27-01-07		
		OPTIONAL PART:		
		ZR1A		
		V51761		
60	ZR1A	.TRANSMITTER ASSY-	106106	1
		SUPPLIER CODE:		
		V51761		
		FUNCTIONAL DESCRIPTION:		
		PROVIDES ELECTRICAL		
		SIGNALS CORRESPONDING TO		
		CONTROL SURFACE MOVEMENT		
		SPECIFICATION NUMBER:		
		S250N104-4		
		COMPONENT MAINT MANUAL REF:		
		27-01-07		
		OPTIONAL PART:		
		H505B		
		V33463		
70	251N1431-3	.BRACKET	106106	1
75	69-43490-13	.ROD ASSY	106106	1
80	BACR15BB3D10C	..RIVET	106106	1
85	69-43493-1	..NUT	106106	1
90	69-43491-1	..END ASSY-ROD	106106	1
95	KSP3LFS428	...BEARING	106106	1
		SUPPLIER CODE:		
		V21335		
		SPECIFICATION NUMBER:		
		BACB10AC3L		
		OPTIONAL PART:		
		HHKSP3L		
		V38443		
		KSP3LE9440A		
		V21335		
		KSP3L2TS		
		V43991		
		KSP3LG27		
		V30163		
100	69-43491-2	...END-ROD	106106	1
105	69-43494-3	..END ASSY-ROD	106106	1

MISSING ITEM NUMBERS NOT APPLICABLE

— ITEM NOT ILLUSTRATED

BOEING PROPRIETARY - Copyright © - Unpublished Work - See title page for details.

FIG ITEM	PART NUMBER	1 2 3 4 5 6 7 NOMENCLATURE	EFFECT FROM TO	UNITS PER ASSY
1A				
110	BACB10FP03LJ	...BEARING	106106	1
115	69-43494-4	...END-ROD	106106	1
120	251N1430-3	.BRACKET-SENSOR	106106	1

MISSING ITEM NUMBERS NOT APPLICABLE

– ITEM NOT ILLUSTRATED

BOEING PROPRIETARY - Copyright © - Unpublished Work - See title page for details.

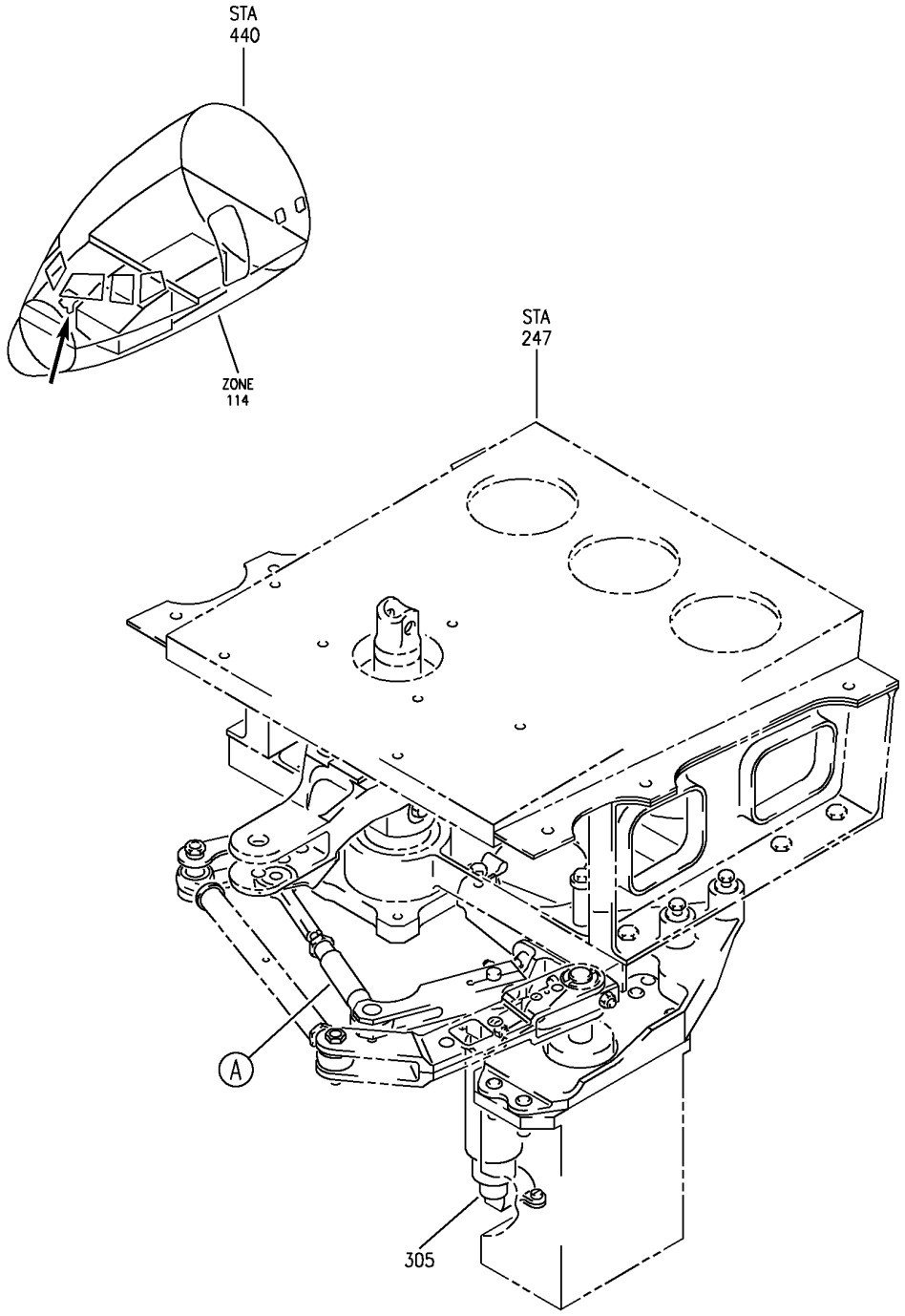

Y 31310901B SHT 1 REV 289

LATERAL CONTROL WHEEL DAMPER-KIT (FLIGHT DATA RECORDING SYSTEM ONLY)
FIGURE 1B (SHEET 1)

BOEING PROPRIETARY - Copyright © - Unpublished Work - See title page for details.

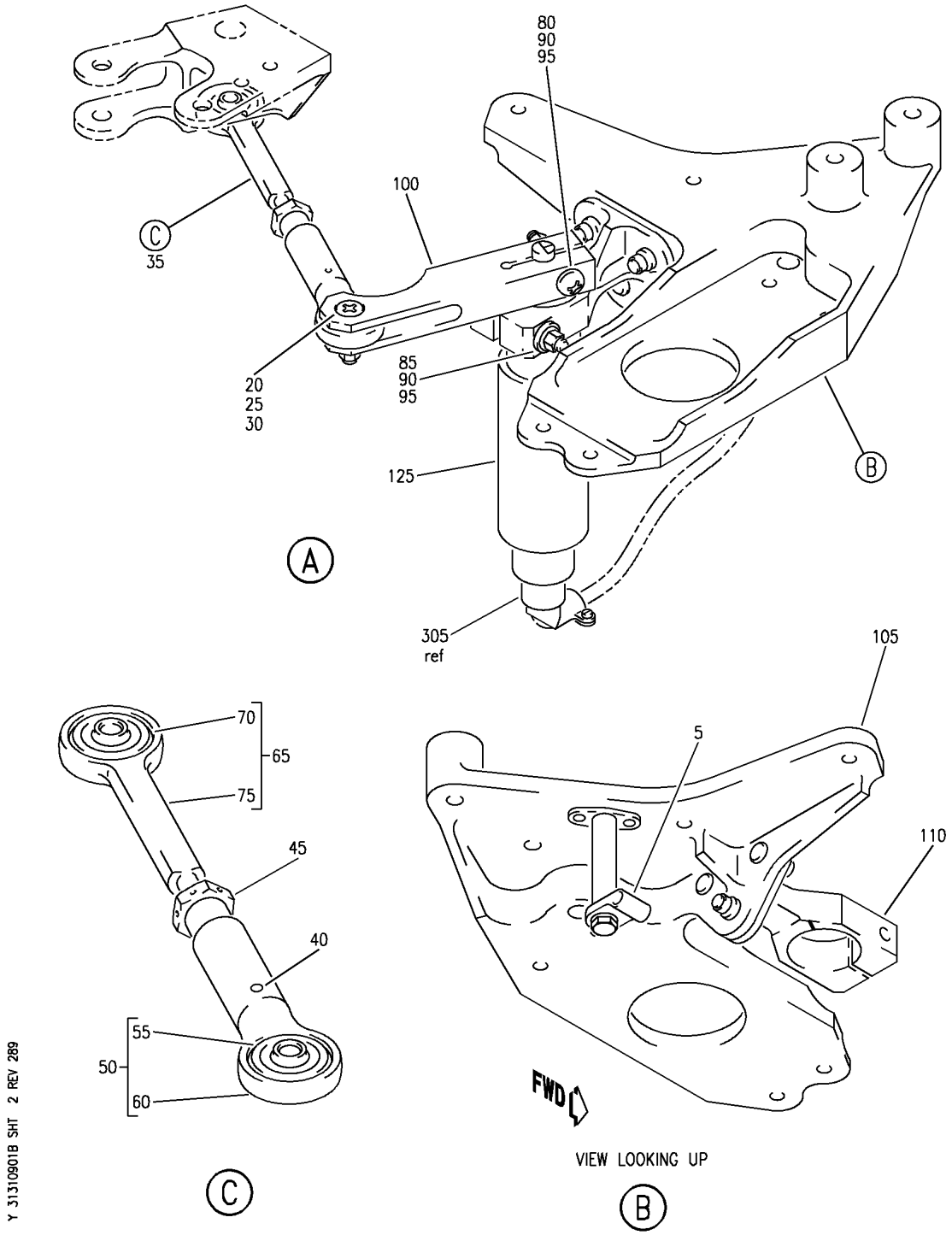

LATERAL CONTROL WHEEL DAMPER-KIT (FLIGHT DATA RECORDING SYSTEM ONLY)
FIGURE 1B (SHEET 2)

BOEING PROPRIETARY - Copyright © - Unpublished Work - See title page for details.

FIG ITEM	PART NUMBER	1 2 3 4 5 6 7 NOMENCLATURE	EFFECT FROM TO	UNITS PER ASSY
1B				
		LATERAL CONTROL WHEEL	103105	
		DAMPER-KIT (FLIGHT DATA	108120	
		RECORDING SYSTEM ONLY)		
- 1	012N0029-1	LATERAL CONTROL WHEEL-	103105	RF
		DAMPER-KIT (FLIGHT DATA	108120	
		RECORDING SYSTEM ONLY)		
		POSITION DATA:		
		FIRST OFFICER SIDE		
		POST SERVICE BULLETIN:		
		27A0146		
		FOR OTHER SYS DETAILS SEE:		
		27-11-02-03		
5	BACC10DK3	.CLAMP	103105	1
			108120	
		ATTACHING PARTS		
- 10	BACS12GU3K10	.SCREW	103105	1
			108120	
- 15	NAS1149C0332J	.WASHER	103105	1
			108120	
		-------*-------		
20	BACB30LH3-7	.BOLT	103105	1
			108120	
25	NAS1149D0332J	.WASHER	103105	1
			108120	
30	PLH53CD	.NUT	103105	1
		SUPPLIER CODE:	108120	
		VF0224		
		SPECIFICATION NUMBER:		
		BACN10YR3CD		
		OPTIONAL PART:		
		H52732-3CD		
		V15653		
35	69-43490-13	.ROD ASSY	103105	1
			108120	
40	BACR15BB3DC	..RIVET-	103105	1
		SIZE DETERMINED ON INSTL.	108120	
45	69-43493-1	..NUT	103105	1
			108120	
50	69-43491-1	..END ASSY-ROD	103105	1
			108120	

MISSING ITEM NUMBERS NOT APPLICABLE

– ITEM NOT ILLUSTRATED

BOEING PROPRIETARY - Copyright © - Unpublished Work - See title page for details.

FIG ITEM	PART NUMBER	1 2 3 4 5 6 7 NOMENCLATURE	EFFECT FROM TO	UNITS PER ASSY
1B				
55	KSP3LFS428	...BEARING SUPPLIER CODE: V21335 SPECIFICATION NUMBER: BACB10AC3L OPTIONAL PART: HHKSP3L V38443 KSP3LE9440A V21335 KSP3L2TS V43991 KSP3LG27 V30163	103105 108120	1
60	69-43491-2	...END-ROD	103105 108120	1
65	69-43494-3	..END ASSY-ROD	103105 108120	1
70	BACB10FP03LJ	...BEARING	103105 108120	1
75	69-43494-4	...END-ROD	103105 108120	1
80	BACB30ZG3-12	.BOLT	103105 108120	1
85	BACB30ZG3-20	.BOLT	103105 108120	1
90	NAS1149D0363J	.WASHER	103105 108120	2
95	PLH53CD	.NUT SUPPLIER CODE: VF0224 SPECIFICATION NUMBER: BACN10YR3CD OPTIONAL PART: H52732-3CD V15653	103105 108120	2
100	251N1431-3	.BRACKET	103105 108120	1
105	251N1031-1	.BRACKET ASSY-DAMPER	103105 108120	RF
110	251N1432-3	..BRACKET-SENSOR	103105 108120	1

MISSING ITEM NUMBERS NOT APPLICABLE

— ITEM NOT ILLUSTRATED

BOEING PROPRIETARY - Copyright © - Unpublished Work - See title page for details.

FIG ITEM	PART NUMBER	1 2 3 4 5 6 7 NOMENCLATURE	EFFECT FROM TO	UNITS PER ASSY
1B				
		ATTACHING PARTS		
- 115	HST10AG6-5	..BOLT	103105	3
		SUPPLIER CODE:	108120	
		V0PTK6		
		SPECIFICATION NUMBER:		
		BACB30VT6K5		
		OPTIONAL PART:		
		HST10AG6-5		
		V06725		
		HST10AG6-5		
		V56878		
		HST10AG6-5		
		V73197		
		WC10K6-5		
		V60516		
- 120	BACC30BL6	..COLLAR	103105	3
		SUPPLIER CODE:	108120	
		V73197		
		SPECIFICATION NUMBER:		
		BACC30BL6		
		OPTIONAL PART:		
		HST79-6		
		V92215		
		HST79CY6		
		V56878		
		HST79CY6		
		V5M902		
		-------*-------		
125	H505B	.TRANSMITTER ASSY-	103105	1
		SUPPLIER CODE:	108120	
		V33463		
		FUNCTIONAL DESCRIPTION:		
		PROVIDES ELECTRICAL		
		SIGNALS CORRESPONDING TO		
		CONTROL SURFACE MOVEMENT		
		SPECIFICATION NUMBER:		
		S250N104-4		
		ELECTRICAL EQUIP NUMBER:		
		TS5301		
		COMPONENT MAINT MANUAL REF:		
		27-01-07		
		OPTIONAL PART:		
		ZR1A		
		V51761		

MISSING ITEM NUMBERS NOT APPLICABLE

- ITEM NOT ILLUSTRATED

BOEING PROPRIETARY - Copyright © - Unpublished Work - See title page for details.

FIG ITEM	PART NUMBER	1 2 3 4 5 6 7 NOMENCLATURE	EFFECT FROM TO	UNITS PER ASSY
1B				
125	ZR1A	.TRANSMITTER ASSY-	103105 108120	1
		SUPPLIER CODE:		
		V51761		
		FUNCTIONAL DESCRIPTION:		
		PROVIDES ELECTRICAL SIGNALS CORRESPONDING TO CONTROL SURFACE MOVEMENT		
		SPECIFICATION NUMBER:		
		S250N104-4		
		ELECTRICAL EQUIP NUMBER:		
		TS5301		
		COMPONENT MAINT MANUAL REF:		
		27-01-07		
		OPTIONAL PART:		
		H505B		
		V33463		
- 300	286N0447-305	WIRE BUNDLE ASSY	108120	RF
- 300	286N0447-701	WIRE BUNDLE ASSY	103105	RF
305	C0909A10B05SN	.CONNECTOR-	103105 108120	1
		SUPPLIER CODE:		
		V13556		
		SPECIFICATION NUMBER:		
		BACC63BN10B5S		
		OPTIONAL PART:		
		48-63N10B5S		
		V02660		
		R071210B5S		
		V41118		
		ELECTRICAL EQUIP NUMBER:		
		D01491		
		WIRING DIAGRAM REF:		
		313151		
		POST SERVICE BULLETIN:		
		27-0146		

MISSING ITEM NUMBERS NOT APPLICABLE

– ITEM NOT ILLUSTRATED

BOEING PROPRIETARY - Copyright © - Unpublished Work - See title page for details.

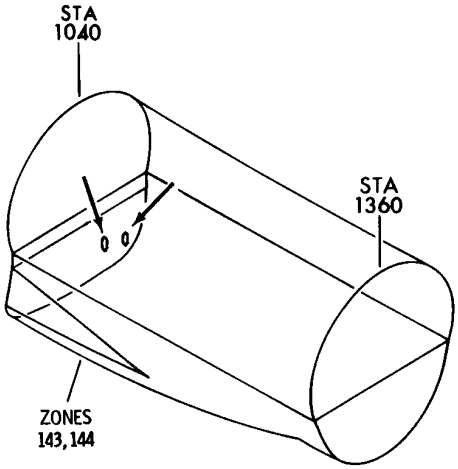

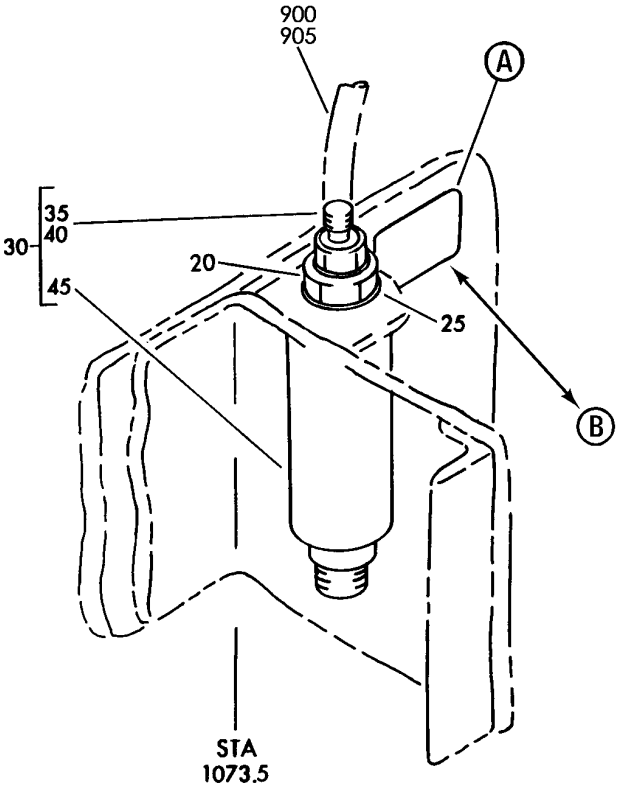

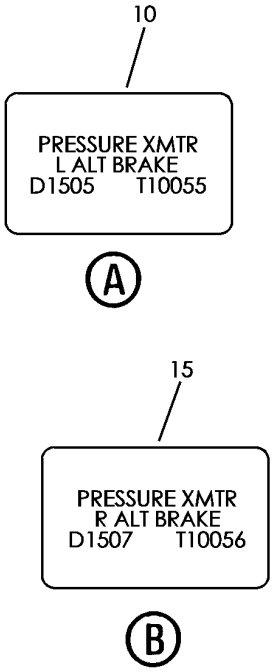

Y 31311301 REV 236

TRANSMITTER INSTL-ALTERNATE BRAKE PRESSURE (LH)
FIGURE 1

BOEING PROPRIETARY - Copyright © - Unpublished Work - See title page for details.

FIG ITEM	PART NUMBER	1 2 3 4 5 6 7 NOMENCLATURE	EFFECT FROM TO	UNITS PER ASSY
1		TRANSMITTER INSTL-ALTERNATE BRAKE PRESSURE (LH)	002004 006106 108903 950999	
- 1	274N1117-1	TRANSMITTER INSTL-ALTERNATE BRAKE PRESSURE POSITION DATA: LH FOR NHA SEE: 29-00-51-05 32-00-00-10	002004 006102 108903 950999	RF
- 2	MODREF8562	TRANSMITTER INSTL-ALTERNATE BRAKE PRESSURE MODULE NUMBER: 274N1117-6 REV A POSITION DATA: LH	103106	1
- 5	274N1117-2	TRANSMITTER INSTL-ALTERNATE BRAKE PRESSURE POSITION DATA: RH FOR NHA SEE: 29-00-51-05 32-00-00-10	002004 006102 108903 950999	RF
- 6	MODREF8563	TRANSMITTER INSTL-ALTERNATE BRAKE PRESSURE MODULE NUMBER: 274N1117-7 REV A POSITION DATA: RH	103106	1
10	BAC27NHY0252	.MARKER-ALUMINUM FOIL POSITION DATA: LH SIDE	002004 006106 108903 950999	1
15	BAC27NHY0254	.MARKER-ALUMINUM FOIL POSITION DATA: RH SIDE	002004 006106 108903 950999	1
20	BACN10DR10D	.NUT	002004 006106 108903 950999	1
R 25	AN960-1416L	.WASHER	002004 006102 108903 950999	1
R 25	NAS1149D1432H	.WASHER	103106	1

MISSING ITEM NUMBERS NOT APPLICABLE

- ITEM NOT ILLUSTRATED

BOEING PROPRIETARY - Copyright © - Unpublished Work - See title page for details.

FIG ITEM	PART NUMBER	1 2 3 4 5 6 7 NOMENCLATURE	EFFECT FROM TO	UNITS PER ASSY
1				
30	274N1117-3	.TRANSMITTER ASSY	002004 006106 108903 950999	1
35	AFP2326-4	..REDUCER SUPPLIER CODE: V30974 SPECIFICATION NUMBER: BACR17E6-4 OPTIONAL PART: AP10276-4 V01673 BC916T6-4 V50948 DBOR17E6-4 V14798 ER21916T6-4 V88334 ER31916-6-4 V88334 F23-6-4 V73197 2-01075T6-4 V11328 31778-6-4 V14397 US2114-6-4 V50808 AP1027T6-4 V01673 US21146-4 V50808 317786-4 V14397	002004 006106 108903 950999	1
40	NAS1612-4	..PACKING-	002004 006106 108903 950999	1

MISSING ITEM NUMBERS NOT APPLICABLE

– ITEM NOT ILLUSTRATED

BOEING PROPRIETARY - Copyright © - Unpublished Work - See title page for details.

FIG ITEM	PART NUMBER	1 2 3 4 5 6 7 NOMENCLATURE	EFFECT FROM TO	UNITS PER ASSY
1				
45	18-2141	..TRANSMITTER-	002004	1
		SUPPLIER CODE:	006106	
		V96774	108903	
		SPECIFICATION NUMBER:	950999	
		S271T451-1		
		ELECTRICAL EQUIP NUMBER:		
		T10055		
		T10056		
		COMPONENT MAINT MANUAL REF:		
		29-30-03		
		OPTIONAL PART:		
		18-2141-2		
		V96774		
		OPTIONAL PART:		
		18-2141-3		
		V96774		
45	18-2141-2	..TRANSMITTER-	002004	1
		SUPPLIER CODE:	006106	
		V96774	108903	
		SPECIFICATION NUMBER:	950999	
		S271T451-1		
		ELECTRICAL EQUIP NUMBER:		
		T10055		
		T10056		
		COMPONENT MAINT MANUAL REF:		
		29-30-03		
		OPTIONAL PART:		
		18-2141		
		V96774		
		OPTIONAL PART:		
		18-2141-3		
		V96774		

MISSING ITEM NUMBERS NOT APPLICABLE

– ITEM NOT ILLUSTRATED

BOEING PROPRIETARY - Copyright © - Unpublished Work - See title page for details.

	FIG ITEM	PART NUMBER	1 2 3 4 5 6 7 NOMENCLATURE	EFFECT FROM TO	UNITS PER ASSY
	1				
R	45	18-2141-3	..TRANSMITTER-	002004	1
R			SUPPLIER CODE:	006106	
R			V96774	108903	
R			FUNCTIONAL DESCRIPTION:	950999	
R			TRANSMITS HYDRAULIC		
R			FLUID QUANTITY TO THE		
R			EICAS COMPUTER		
R			SPECIFICATION NUMBER:		
R			S271T451-3		
R			ELECTRICAL EQUIP NUMBER:		
R			T10055		
R			T10056		
R			COMPONENT MAINT MANUAL REF:		
R			29-30-03		
R			OPTIONAL PART:		
R			18-2141		
R			V96774		
R			18-2141-2		
R			V96774		
	900		ILLUSTRATION REFERENCE:		
			PLUMBING INSTL-SECT. 44	002004	RF
			MLG WHL WELL HYDR	006102	
			(HYDRAULIC BRAKE SYSTEM	108903	
			ONLY)	950999	
			32-41-51-22		
	900		ILLUSTRATION REFERENCE:		
			PLUMBING INSTL-PRESSURE	101102	RF
			DECK SECT. 44 L (MAIN	504903	
			HYDR SYS)		
			29-11-84-05		
	905		ILLUSTRATION REFERENCE:		
			PLUMBING INSTL-SECT. 44	002004	RF
			MLG WHL WELL HYDR	006102	
			(HYDRAULIC BRAKE SYSTEM	108903	
			ONLY)	950999	
			32-41-51-22		
	905		ILLUSTRATION REFERENCE:		
			PLUMBING INSTL-SECT. 44	101102	RF
			DFDAU BRAKE PRESSURE	504903	
			TRANSMITTER PROV.		
			32-41-51-23		

MISSING ITEM NUMBERS NOT APPLICABLE

– ITEM NOT ILLUSTRATED

BOEING PROPRIETARY - Copyright © - Unpublished Work - See title page for details.

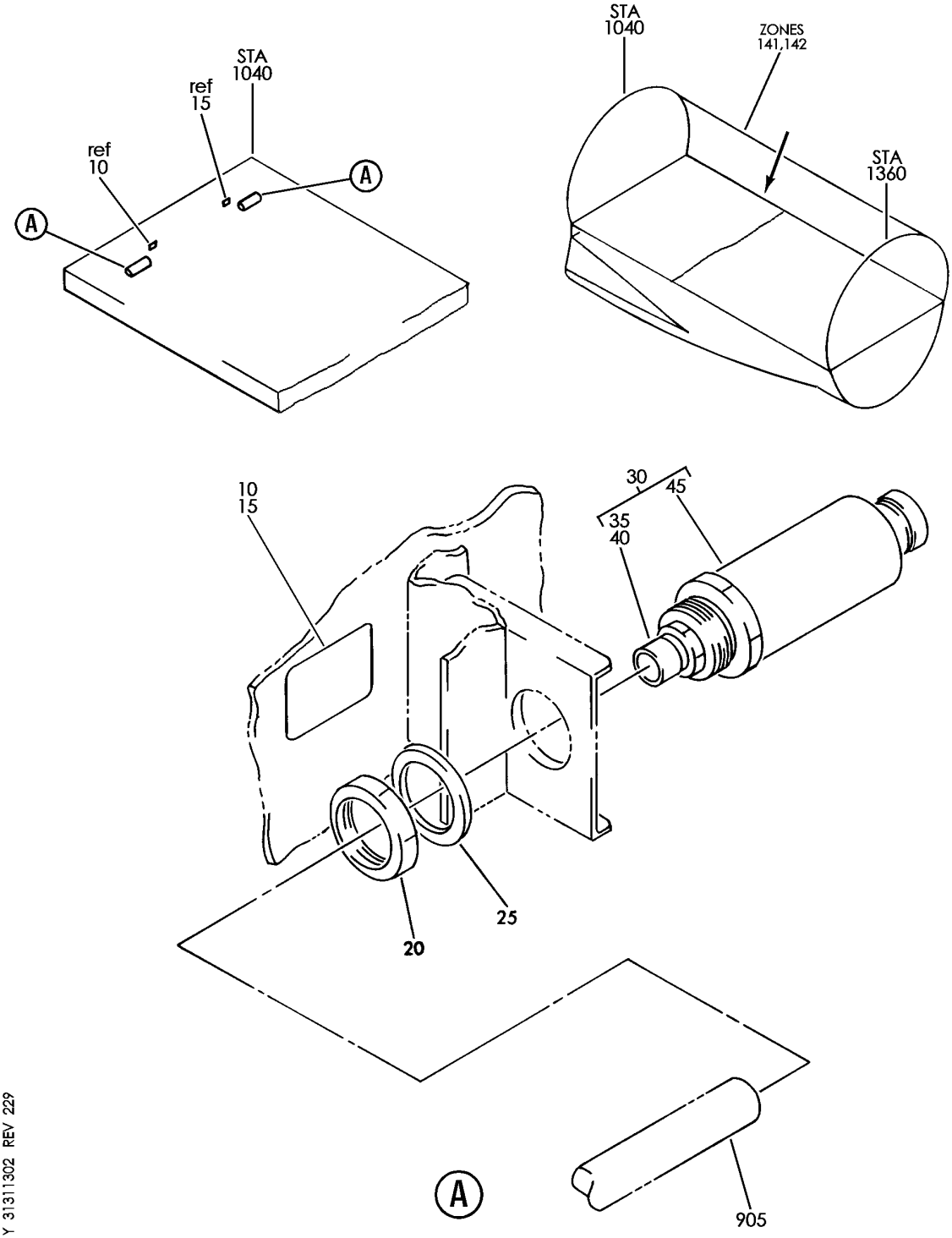

TRANSMITTER INSTL-NORMAL BRAKE PRESSURE
FIGURE 2

BOEING PROPRIETARY - Copyright © - Unpublished Work - See title page for details.

FIG ITEM	PART NUMBER	1 2 3 4 5 6 7 NOMENCLATURE	EFFECT FROM TO	UNITS PER ASSY
2				
		TRANSMITTER INSTL-NORMAL BRAKE PRESSURE	002004 006106 108903 950999	
- 1	274N1118-1	TRANSMITTER INSTL-NORMAL BRAKE PRESSURE POSITION DATA: LH FOR NHA SEE: 29-00-51-05 32-00-00-10	002004 006102 108903 950999	RF
- 2	MODREF8643	TRANSMITTER INSTL-NORMAL BRAKE PRESSURE MODULE NUMBER: 274N1118-9 REV A POSITION DATA: LH	103106	1
- 5	274N1118-2	TRANSMITTER INSTL-NORMAL BRAKE PRESSURE POSITION DATA: RH FOR NHA SEE: 29-00-51-05 32-00-00-10	002004 006102 108903 950999	RF
- 6	MODREF8564	TRANSMITTER INSTL-NORMAL BRAKE PRESSURE MODULE NUMBER: 274N1118-10 REV A POSITION DATA: RH	103106	1
10	BAC27NHY0253	.MARKER-ALUMINUM FOIL POSITION DATA: LH SIDE	002004 006106 108903 950999	1
15	BAC27NHY0255	.MARKER-ALUMINUM FOIL POSITION DATA: RH SIDE	002004 006106 108903 950999	1
20	BACN10DR10D	.NUT	002004 006106 108903 950999	1
R 25	NAS1149F1432P	.WASHER	002004 006102 108903 950999	1
R 25	NAS1149D1432H	.WASHER	103106	1

MISSING ITEM NUMBERS NOT APPLICABLE

– ITEM NOT ILLUSTRATED

BOEING PROPRIETARY - Copyright © - Unpublished Work - See title page for details.

FIG ITEM	PART NUMBER	1 2 3 4 5 6 7 NOMENCLATURE	EFFECT FROM TO	UNITS PER ASSY
2				
30	274N1118-3	.TRANSMITTER ASSY	002004 006106 108903 950999	1
35	AFP2326-4	..REDUCER SUPPLIER CODE: V30974 SPECIFICATION NUMBER: BACR17E6-4 OPTIONAL PART: AP10276-4 V01673 BC916T6-4 V50948 DBOR17E6-4 V14798 ER21916T6-4 V88334 ER31916-6-4 V88334 F23-6-4 V73197 2-01075T6-4 V11328 31778-6-4 V14397 US2114-6-4 V50808 AP1027T6-4 V01673 US21146-4 V50808 317786-4 V14397	002004 006106 108903 950999	1
40	NAS1612-4	..PACKING-	002004 006106 108903 950999	1

MISSING ITEM NUMBERS NOT APPLICABLE

– ITEM NOT ILLUSTRATED

BOEING PROPRIETARY - Copyright © - Unpublished Work - See title page for details.

FIG ITEM	PART NUMBER	1 2 3 4 5 6 7 NOMENCLATURE	EFFECT FROM TO	UNITS PER ASSY
2				
45	18-2141	..TRANSMITTER-	002004	1
		SUPPLIER CODE:	006106	
		V96774	108903	
		SPECIFICATION NUMBER:	950999	
		S271T451-1		
		ELECTRICAL EQUIP NUMBER:		
		T10053		
		T10054		
		COMPONENT MAINT MANUAL REF:		
		29-30-03		
		OPTIONAL PART:		
		18-2141-2		
		V96774		
		OPTIONAL PART:		
		18-2141-3		
		V96774		
45	18-2141-2	..TRANSMITTER-	002004	1
		SUPPLIER CODE:	006106	
		V96774	108903	
		SPECIFICATION NUMBER:	950999	
		S271T451-1		
		ELECTRICAL EQUIP NUMBER:		
		T10053		
		T10054		
		COMPONENT MAINT MANUAL REF:		
		29-30-03		
		OPTIONAL PART:		
		18-2141		
		V96774		
		OPTIONAL PART:		
		18-2141-3		
		V96774		

MISSING ITEM NUMBERS NOT APPLICABLE

– ITEM NOT ILLUSTRATED

BOEING PROPRIETARY - Copyright © - Unpublished Work - See title page for details.

	FIG ITEM	PART NUMBER	1 2 3 4 5 6 7 NOMENCLATURE	EFFECT FROM TO	UNITS PER ASSY
	2				
R	45	18-2141-3	..TRANSMITTER-	002004	1
R			SUPPLIER CODE:	006106	
R			V96774	108903	
R			FUNCTIONAL DESCRIPTION:	950999	
R			TRANSMITS HYDRAULIC		
R			FLUID QUANTITY TO THE		
R			EICAS COMPUTER		
R			SPECIFICATION NUMBER:		
R			S271T451-3		
R			ELECTRICAL EQUIP NUMBER:		
R			T10053		
R			T10054		
R			COMPONENT MAINT MANUAL REF:		
R			29-30-03		
R			OPTIONAL PART:		
R			18-2141		
R			V96774		
R			18-2141-2		
R			V96774		
	910		ILLUSTRATION REFERENCE:		
			PLUMBING INSTL-MAIN WHL	101102	RF
			WELL FWD BHD HYDR	108120	
			(HYDRAULIC POWER ONLY)	504903	
			29-11-51-39A		

MISSING ITEM NUMBERS NOT APPLICABLE

– ITEM NOT ILLUSTRATED

BOEING PROPRIETARY - Copyright © - Unpublished Work - See title page for details.

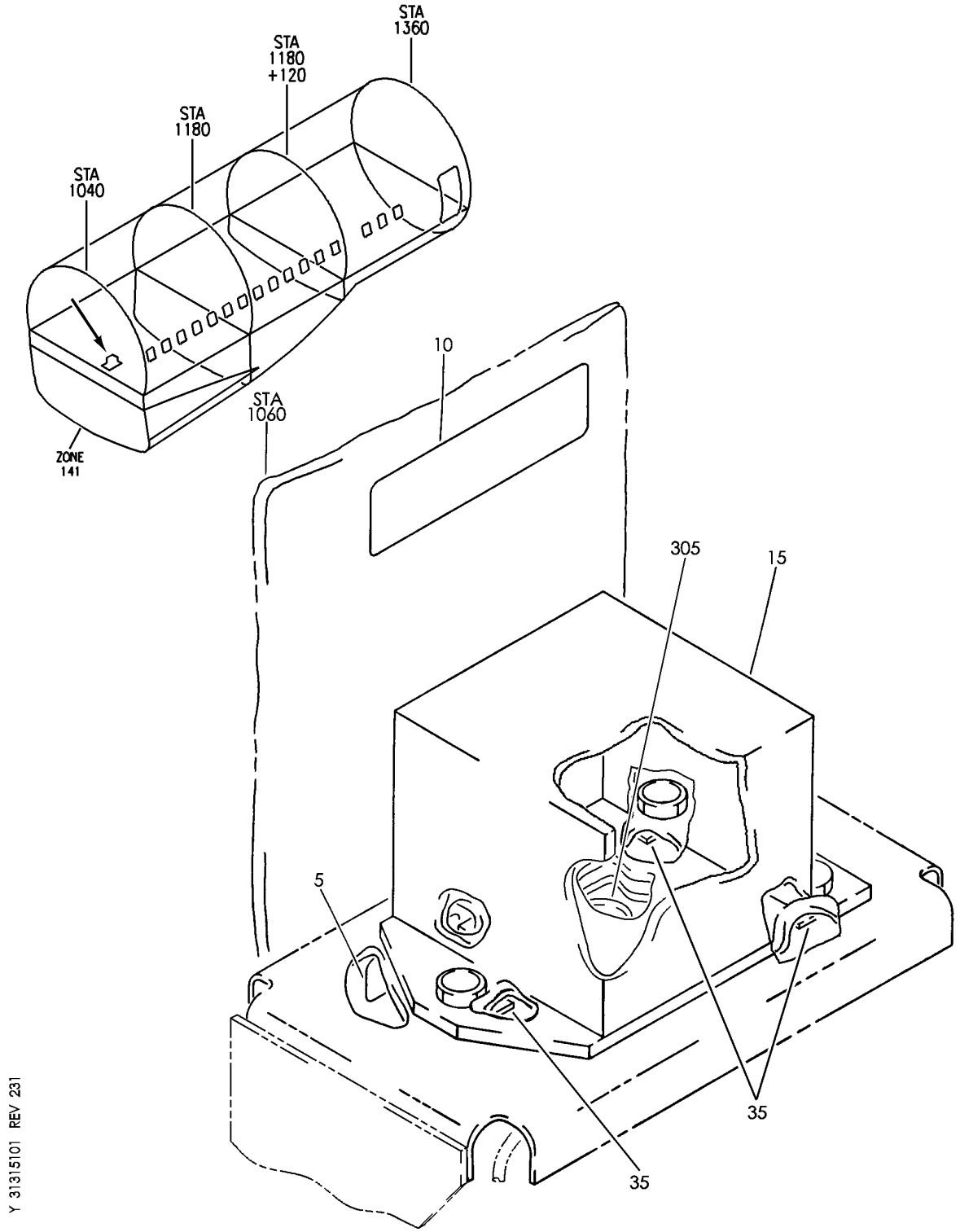

TRANSDUCER INSTL-3 AXIS ACCLRM (FLIGHT RECORDER ONLY)
FIGURE 1

BOEING PROPRIETARY - Copyright © - Unpublished Work - See title page for details.

FIG ITEM	PART NUMBER	1 2 3 4 5 6 7 NOMENCLATURE	EFFECT FROM TO	UNITS PER ASSY
1				
		TRANSDUCER INSTL-3 AXIS ACCLRM (FLIGHT RECORDER ONLY)	002004 006999	
- 1	284N1444-2	TRANSDUCER INSTL-3 AXIS ACCLRM (FLIGHT RECORDER ONLY) FOR NHA SEE: 24-00-58-01B 24-00-58-05D	002004 006102 107107	RF
- 1	284N1444-3	TRANSDUCER INSTL-3 AXIS ACCLRM (FLIGHT RECORDER ONLY) FOR NHA SEE: 24-00-58-01B	121503 904949	RF
- 1	284N1444-5	TRANSDUCER INSTL-3 AXIS ACCLRM (FLIGHT RECORDER ONLY) FOR NHA SEE: 24-00-58-01B	950999	RF
- 1	284N1444-14	TRANSDUCER INSTL-3 AXIS ACCLRM (FLIGHT RECORDER ONLY) FOR NHA SEE: 24-00-58-05D	504903	RF
- 1	284N1444-15	TRANSDUCER INSTL-3 AXIS ACCLRM (FLIGHT RECORDER ONLY) FOR NHA SEE: 24-00-58-05D	108120	RF
- 2	MODREF22585	TRANSDUCER INSTL-3 AXIS ACCLRM (FLIGHT RECORDER ONLY) MODULE NUMBER: 284N1444-15 REV B	103106	1
5	BAC27NEL0295	.MARKER- PLACARD CONTENT: D17	002004 006999	1
10	BAC27NEL0296	.MARKER- PLACARD CONTENT: TS28 XDCR-ACCELERATION 3 AXIS	002004 006999	1

MISSING ITEM NUMBERS NOT APPLICABLE

- ITEM NOT ILLUSTRATED

BOEING PROPRIETARY - Copyright © - Unpublished Work - See title page for details.

	FIG ITEM	PART NUMBER	1 2 3 4 5 6 7 NOMENCLATURE	EFFECT FROM TO	UNITS PER ASSY
	1				
	15	971-4193-001	.ACCELEROMETER- SUPPLIER CODE: V97896 FUNCTIONAL DESCRIPTION: PROVIDES ACCELERATION DATA TO THE FLIGHT DATA RECORDER SYSTEM. ELECTRICAL EQUIP NUMBER: TS0028 QUALIFIED I/W DATA: 18-3001-3 I/W 971-4193-001 SUBJECT TO CUSTOMER PREFERENCE	103106 121949	1
R	15	971-4193-001	.ACCELEROMETER- SUPPLIER CODE: V97896 FUNCTIONAL DESCRIPTION: PROVIDES ACCELERATION DATA TO THE FLIGHT DATA RECORDER SYSTEM. ELECTRICAL EQUIP NUMBER: TS0028 QUALIFIED I/W DATA: 18-3001-3 I/W 971-4193-001 SUBJECT TO CUSTOMER PREFERENCE	108120 950999	1
	15	18-3001-3	.ACCELEROMETER- SUPPLIER CODE: V96774 SPECIFICATION NUMBER: S283T011-3 ELECTRICAL EQUIP NUMBER: TS0028 COMPONENT MAINT MANUAL REF: 31-30-01 QUALIFIED I/W DATA: 18-3001-3 I/W 971-4193-001 SUBJECT TO CUSTOMER PREFERENCE ATTACHING PARTS	002004 006102 107107	1
-	20	NAS6703-3	.BOLT-	002004 006503 904949	3
-	25	NAS1149F0332P	.WASHER-	002004 006503 904949	3
			-------*-------		

MISSING ITEM NUMBERS NOT APPLICABLE

- ITEM NOT ILLUSTRATED

BOEING PROPRIETARY - Copyright © - Unpublished Work - See title page for details.

FIG ITEM	PART NUMBER	1 2 3 4 5 6 7 NOMENCLATURE	EFFECT FROM TO	UNITS PER ASSY
1				
35	MF53049-3	.NUTPLATE	002004	3
		SUPPLIER CODE:	006102	
		V15653	107107	
		SPECIFICATION NUMBER:	121503	
		BACN10JN3	904949	
		OPTIONAL PART:		
		BRFM20A3		
		V52828		
		MF1000-3BAC		
		V15653		
		NS103218-02		
		V80539		
		RMF9201M3		
		V72962		
		VN252A02		
		V92215		
		T8124S3S		
		V11815		
		ATTACHING PARTS		
- 40	BACR15BA3DA	.RIVET-	002004	6
		SIZE DETERMINED ON INSTL.	006102	
			107107	
			121503	
			904949	
		-------*-------		
- 300	286N2416-003	WIRE BUNDLE ASSY	002004	RF
			006100	
			950999	
- 300	286N2416-004	WIRE BUNDLE ASSY	107107	RF
			121503	
			904949	
- 300	286N2416-309	WIRE BUNDLE ASSY-	101102	RF
- 300	286N2416-315	WIRE BUNDLE ASSY	504903	RF
- 301	286N2416-320	WIRE BUNDLE ASSY-	108120	RF
- 302	286N5806-601	WIRE BUNDLE ASSY	103106	RF
305	MS3126F12-10S	.CONNECTOR-	002004	1
		ELECTRICAL EQUIP NUMBER:	006999	
		D00017		
		WIRING DIAGRAM REF:		
		313113		
		313151		

MISSING ITEM NUMBERS NOT APPLICABLE

- ITEM NOT ILLUSTRATED

BOEING PROPRIETARY - Copyright © - Unpublished Work - See title page for details.

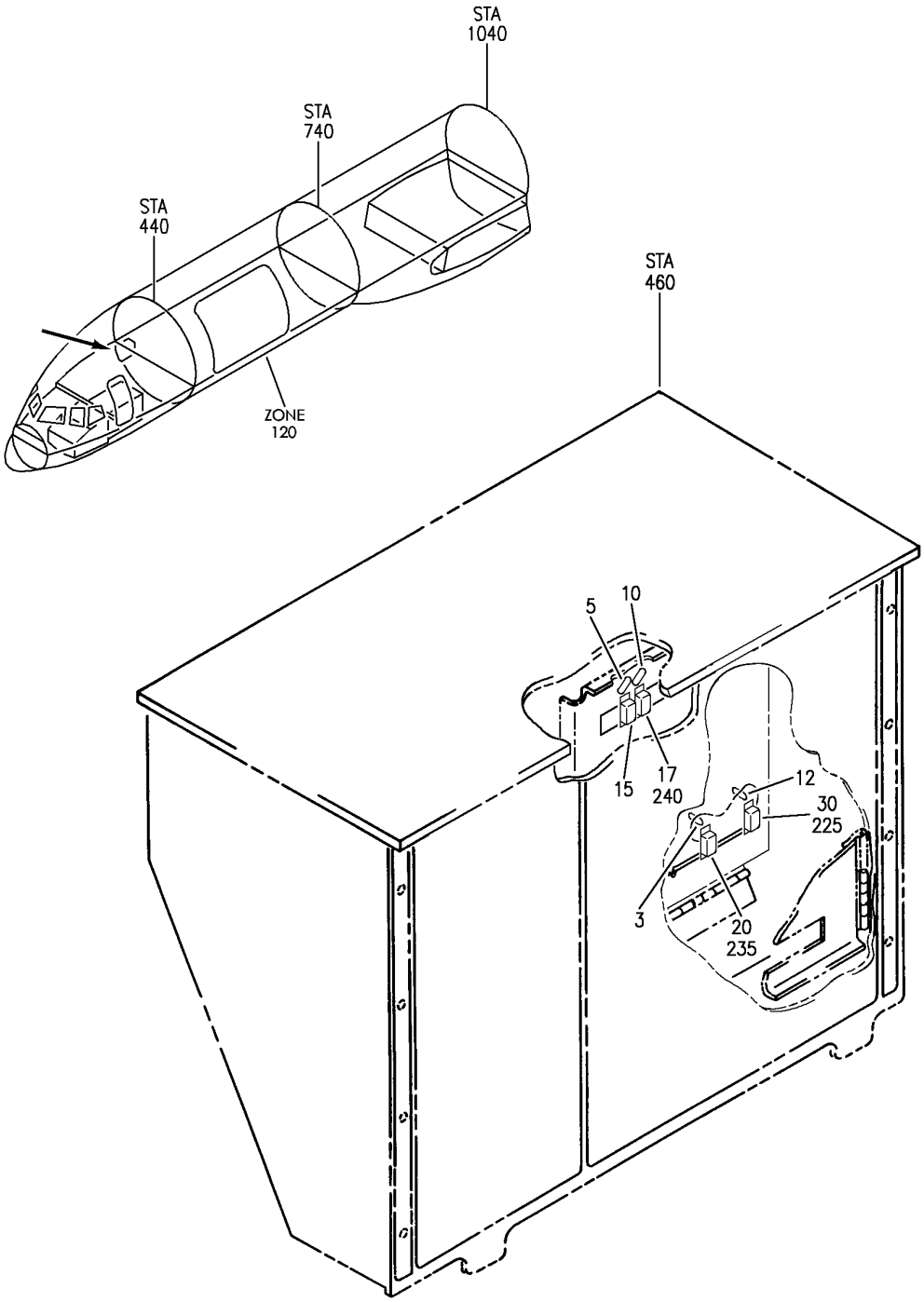

P37 MISC RELAY R (INSTRUMENTS ONLY)
FIGURE 2

BOEING PROPRIETARY - Copyright © - Unpublished Work - See title page for details.

FIG ITEM	PART NUMBER	1 2 3 4 5 6 7 NOMENCLATURE	EFFECT FROM TO	UNITS PER ASSY
2				
		P37 MISC RELAY R (INSTRUMENTS ONLY)	002004 006100 107107 121503 904999	
- 1	284N1127-1	PANEL ASSY-P37 MISC RELAY (INSTRUMENTS ONLY) POSITION DATA: R VARIABLE DRAWING REF: 284N1127-5028 284N1127-5039 284N1127-5063 284N1127-5064 284N1127-5068 REWORKED BY SB: 33-0039 34-0200 REWORKED BY ALERT SB: 27A0130 FOR NHA/OTHER SYS DET SEE: 31-01-37-01B	002004 006100 107107 121503 904999	RF
3	BAC27NEX2559	.DECAL- PLACARD CONTENT: K10677	002004 006100 121503 950999	1
5	BAC27TEX0293	.DECAL- PLACARD CONTENT: K15	002004 006100 107107 121503 904999	1
10	BAC27NEX0981	.DECAL- PLACARD CONTENT: K554 PRE ALERT SB: 34A0222	002004 006100	1

MISSING ITEM NUMBERS NOT APPLICABLE

- ITEM NOT ILLUSTRATED

BOEING PROPRIETARY - Copyright © - Unpublished Work - See title page for details.

FIG ITEM	PART NUMBER	1 2 3 4 5 6 7 NOMENCLATURE	EFFECT FROM TO	UNITS PER ASSY
2				
15	W260F4AM11	.RELAY-	002004	1
		SUPPLIER CODE:	006100	
		VF0219	107107	
		SPECIFICATION NUMBER:	121503	
		BACR13CD2	904999	
		OPTIONAL PART:		
		BR16S233		
		V09026		
		EE4AA005		
		V35344		
		3SAV1338A2		
		V01526		
		HFW1206K03		
		V58614		
		HFW1204K01		
		V71482		
		ELECTRICAL EQUIP NUMBER:		
		K00015		
17	W260F4AM11	.RELAY-	002004	1
		SUPPLIER CODE:	006100	
		VF0219		
		SPECIFICATION NUMBER:		
		BACR13CD2		
		OPTIONAL PART:		
		BR16S233		
		V09026		
		EE4AA005		
		V35344		
		3SAV1338A2		
		V01526		
		HFW1206K03		
		V58614		
		HFW1204K01		
		V71482		
		ELECTRICAL EQUIP NUMBER:		
		K00554		
		PRE ALERT SB:		
		34A0222		

MISSING ITEM NUMBERS NOT APPLICABLE

– ITEM NOT ILLUSTRATED

BOEING PROPRIETARY - Copyright © - Unpublished Work - See title page for details.

FIG ITEM	PART NUMBER	1 2 3 4 5 6 7 NOMENCLATURE	EFFECT FROM TO	UNITS PER ASSY
2				
20	W260F4AM11	.RELAY-	002004	1
		SUPPLIER CODE:	006100	
		VF0219	121503	
		SPECIFICATION NUMBER:	950999	
		BACR13CD2		
		OPTIONAL PART:		
		BR16S233		
		V09026		
		EE4AA005		
		V35344		
		3SAV1338A2		
		V01526		
		HFW1206K03		
		V58614		
		HFW1204K01		
		V71482		
		ELECTRICAL EQUIP NUMBER:		
		K10677		
		WIRING DIAGRAM REF:		
		313142		
- 200	286N1270-003	WIRE BUNDLE ASSY-	107107	RF
		REWORKED BY SB:		
		31-0094		
		PRE ALERT SB:		
		34A0222		
		REWORKED BY ALERT SB:		
		27A0130		
- 200	286N1270-005	WIRE BUNDLE ASSY-	002004	RF
		REWORKED BY SB:	006100	
		33-0039	950999	
		PRE ALERT SB:		
		34A0222		
		REWORKED BY ALERT SB:		
		27A0130		
- 200	286N1270-002	WIRE BUNDLE ASSY-	121503	RF
		PRE ALERT SB:	904949	
		34A0222		
		REWORKED BY ALERT SB:		
		27A0130		

MISSING ITEM NUMBERS NOT APPLICABLE

- ITEM NOT ILLUSTRATED

BOEING PROPRIETARY - Copyright © - Unpublished Work - See title page for details.

FIG ITEM	PART NUMBER	1 2 3 4 5 6 7 NOMENCLATURE	EFFECT FROM TO	UNITS PER ASSY
2				
235	RSE120026	.SOCKET-	002004	1
		SUPPLIER CODE:	006100	
		V58982	121503	
		SPECIFICATION NUMBER:	950999	
		BACS16AG1		
		OPTIONAL PART:		
		451120-026		
		V58982		
		ELECTRICAL EQUIP NUMBER:		
		D01809		
		WIRING DIAGRAM REF:		
		313142		
240	RSE120026	.SOCKET-	002004	1
		SUPPLIER CODE:	006100	
		V58982	107107	
		SPECIFICATION NUMBER:	121503	
		BACS16AG1	904949	
		OPTIONAL PART:	952999	
		451120-026		
		V58982		
		ELECTRICAL EQUIP NUMBER:		
		D00585		
		WIRING DIAGRAM REF:		
		313112		

MISSING ITEM NUMBERS NOT APPLICABLE

– ITEM NOT ILLUSTRATED

BOEING PROPRIETARY - Copyright © - Unpublished Work - See title page for details.

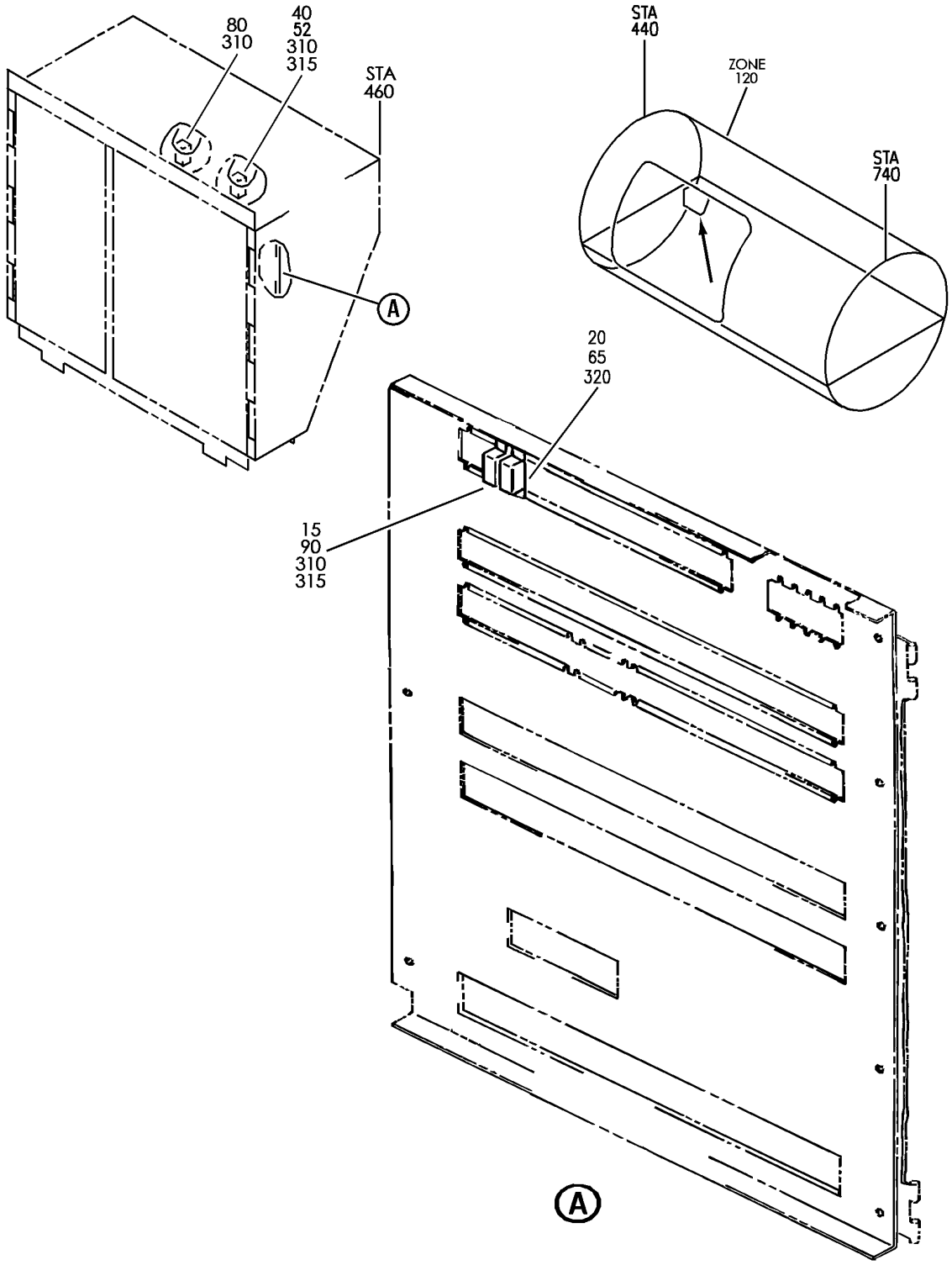

PACKAGE ASSY-OPTION P37 MISC RELAY (INSTRUMENTS ONLY)
FIGURE 2B

BOEING PROPRIETARY - Copyright © - Unpublished Work - See title page for details.

FIG ITEM	PART NUMBER	1 2 3 4 5 6 7 NOMENCLATURE	EFFECT FROM TO	UNITS PER ASSY
2B				
		PACKAGE ASSY-OPTION P37	101102	
		MISC RELAY	504903	
		(INSTRUMENTS ONLY)		
- 25	284N1127-1006	PACKAGE ASSY-P37 MISC RELAY	101102	RF
		(INSTRUMENTS ONLY)	504903	
		MISCELLANEOUS DATA:		
		DIGITAL FLIGHT DATA		
		ACQUISITION UNIT		
		REWORKED BY ALERT SB:		
		27A0130		
		FOR NHA SEE:		
		31-01-37-02		
40	W260F4AM11	.RELAY-	101102	1
		SUPPLIER CODE:	504903	
		VF0219		
		SPECIFICATION NUMBER:		
		BACR13CD2		
		OPTIONAL PART:		
		BR16S233		
		V09026		
		EE4AA005		
		V35344		
		3SAV1338A2		
		V01526		
		HFW1206K03		
		V58614		
		HFW1204K01		
		V71482		
		ELECTRICAL EQUIP NUMBER:		
		K10677		
- 50	284N1127-1043	PACKAGE ASSY-P37 MISC RELAY	101102	RF
		(INSTRUMENTS ONLY)	504903	
		MISCELLANEOUS DATA:		
		757-200 MINOR MODEL		
		REWORKED BY ALERT SB:		
		27A0130		
		FOR NHA/OTHER SYS DET SEE:		
		31-01-37-02		

MISSING ITEM NUMBERS NOT APPLICABLE

- ITEM NOT ILLUSTRATED

BOEING PROPRIETARY - Copyright © - Unpublished Work - See title page for details.

FIG ITEM	PART NUMBER	1 2 3 4 5 6 7 NOMENCLATURE	EFFECT FROM TO	UNITS PER ASSY
2B				
52	W260F4AM11	.RELAY-	101102	1
		SUPPLIER CODE:		
		VF0219		
		SPECIFICATION NUMBER:		
		BACR13CD2		
		OPTIONAL PART:		
		BR16S233		
		V09026		
		EE4AA005		
		V35344		
		3SAV1338A2		
		V01526		
		HFW1206K03		
		V58614		
		HFW1204K01		
		V71482		
		ELECTRICAL EQUIP NUMBER:		
		K10677		
		POST AIRLINE MOD:		
		ECO F0551BX		
		VAAL		
65	W260F4AM11	.RELAY-	101102	1
		SUPPLIER CODE:	504903	
		VF0219		
		SPECIFICATION NUMBER:		
		BACR13CD2		
		OPTIONAL PART:		
		BR16S233		
		V09026		
		EE4AA005		
		V35344		
		3SAV1338A2		
		V01526		
		HFW1206K03		
		V58614		
		HFW1204K01		
		V71482		
		ELECTRICAL EQUIP NUMBER:		
		K00554		
		PRE ALERT SB:		
		34A0222		

MISSING ITEM NUMBERS NOT APPLICABLE

— ITEM NOT ILLUSTRATED

BOEING PROPRIETARY - Copyright © - Unpublished Work - See title page for details.

FIG ITEM	PART NUMBER	1 2 3 4 5 6 7 NOMENCLATURE	EFFECT FROM TO	UNITS PER ASSY
2B				
- 85	284N1127-1041	PACKAGE ASSY-OPTION P37 MISC RELAY (INSTRUMENTS ONLY) MISCELLANEOUS DATA: 757 MAJOR MODEL REWORKED BY ALERT SB: 27A0130 FOR NHA/OTHER SYS DET SEE: 31-01-37-02	101102 504903	RF
90	W260F4AM11	.RELAY- SUPPLIER CODE: VF0219 SPECIFICATION NUMBER: BACR13CD2 OPTIONAL PART: BR16S233 V09026 EE4AA005 V35344 3SAV1338A2 V01526 HFW1206K03 V58614 HFW1204K01 V71482 ELECTRICAL EQUIP NUMBER: K00015	101102 504903	1
- 300	286N1270-336	WIRE BUNDLE ASSY- REWORKED BY ALERT SB: 34A0222 27A0130	504903	RF
- 301	286N1270-361	WIRE BUNDLE ASSY- REWORKED BY ALERT SB: 34A0222 27A0130	101101	RF
- 301	286N1270-399	WIRE BUNDLE ASSY- REWORKED BY ALERT SB: 34A0222 27A0130	102102	RF

MISSING ITEM NUMBERS NOT APPLICABLE

- ITEM NOT ILLUSTRATED

BOEING PROPRIETARY - Copyright © - Unpublished Work - See title page for details.

FIG ITEM	PART NUMBER	1 2 3 4 5 6 7 NOMENCLATURE	EFFECT FROM TO	UNITS PER ASSY
2B				
315	RSE120026	.SOCKET- SUPPLIER CODE: V58982 SPECIFICATION NUMBER: BACS16AG1 OPTIONAL PART: 451120-026 V58982 ELECTRICAL EQUIP NUMBER: D00687 D01809 WIRING DIAGRAM REF: 313141 313142	101102 504903	2
320	RSE120026	.SOCKET- SUPPLIER CODE: V58982 SPECIFICATION NUMBER: BACS16AG1 OPTIONAL PART: 451120-026 V58982 ELECTRICAL EQUIP NUMBER: D00585 WIRING DIAGRAM REF: 313112 PRE ALERT SB: 34A0222	101102 504903	1

MISSING ITEM NUMBERS NOT APPLICABLE

– ITEM NOT ILLUSTRATED

BOEING PROPRIETARY - Copyright © - Unpublished Work - See title page for details.

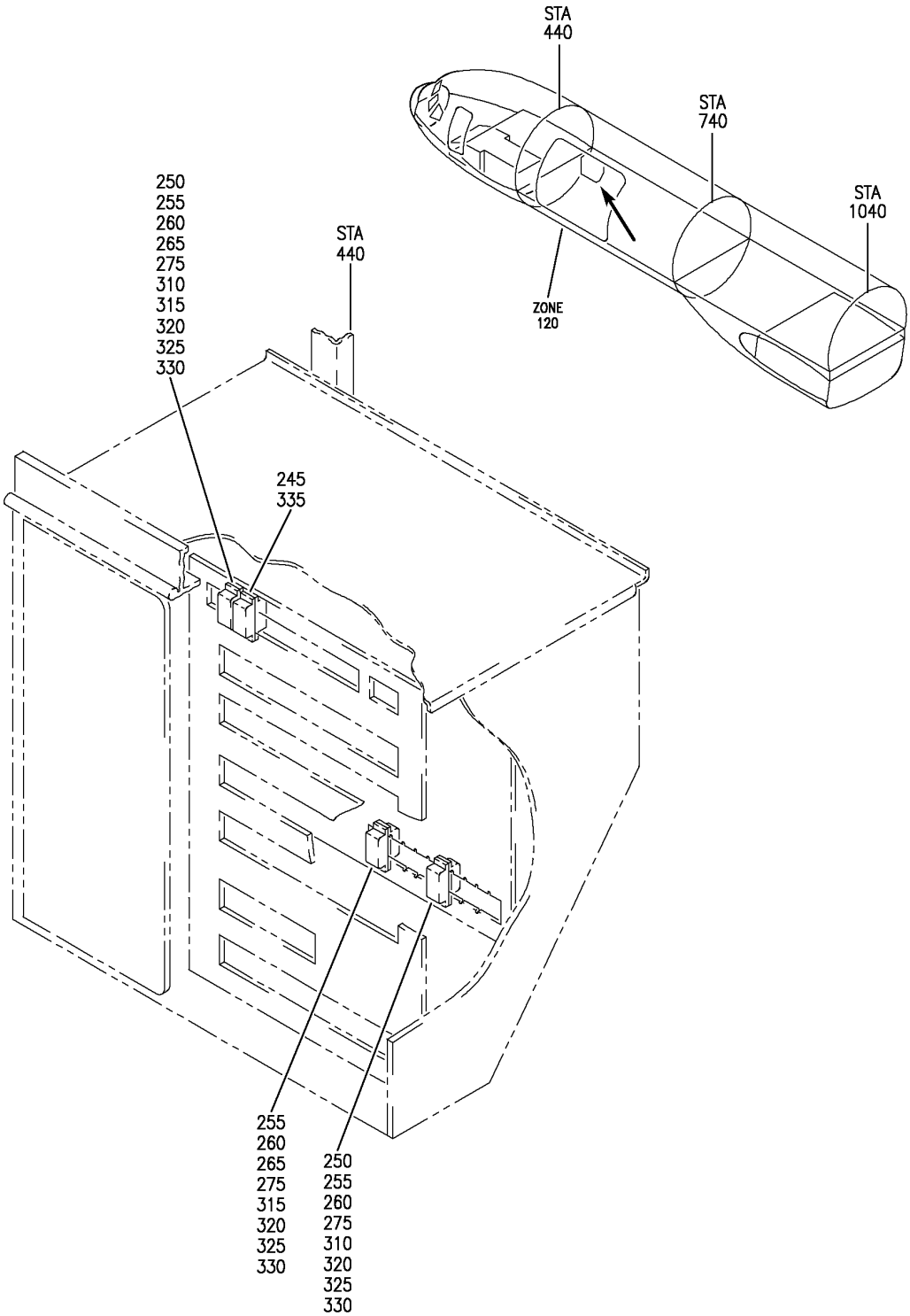

PANEL INSTL-P37 R MISC RELAY (FLIGHT DATA RECORDER SYSTEM ONLY)
FIGURE 2D

BOEING PROPRIETARY - Copyright © - Unpublished Work - See title page for details.

FIG ITEM	PART NUMBER	1 2 3 4 5 6 7 NOMENCLATURE	EFFECT FROM TO	UNITS PER ASSY
2D				
		PANEL INSTL-P37 R MISC	103106	
		RELAY (FLIGHT DATA	108120	
		RECORDER SYSTEM ONLY)		
- 1	MODREF185037	PANEL INSTL-P37 R MISC	106106	1
		RELAY (FLIGHT DATA		
		RECORDER SYSTEM ONLY)		
		MODULE NUMBER:		
		284N1127-169 REV D		
		FOR OTHER SYS DETAILS SEE:		
		11-36-12-02A		
		21-25-71-02D		
		21-44-71-02D		
		21-45-31-01D		
		21-51-55-01D		
		21-58-71-02D		
		21-61-71-02D		
		23-31-51-05		
		24-21-51-05		
		24-51-01-02		
		24-51-02-03		
		24-51-58-02D		
		27-62-71-03D		
		28-22-71-03D		
		29-21-71-01D		
		30-11-71-02D		
		30-21-71-03D		
		30-31-71-02D		
		30-32-71-02D		
		30-33-71-02D		
		30-34-51-01D		
		31-01-37-10		
		32-09-02-04D		
		32-42-71-02D		
		32-61-71-02D		
		33-43-55-01D		
		33-51-71-01D		
		34-12-71-02D		
		34-25-50-01D		
		34-61-52-01D		
		35-21-71-02D		
		36-11-71-02D		
		38-15-71-02D		
		73-21-55-01D		
		74-31-71-02D		
		76-11-71-02D		
		77-12-71-01D		
		78-34-71-02D		
		78-36-71-02D		
		80-11-71-02D		

MISSING ITEM NUMBERS NOT APPLICABLE

- ITEM NOT ILLUSTRATED

BOEING PROPRIETARY - Copyright © - Unpublished Work - See title page for details.

FIG ITEM	PART NUMBER	1 2 3 4 5 6 7 NOMENCLATURE	EFFECT FROM TO	UNITS PER ASSY
2D				
- 3	284N1127-118	PANEL INSTL-P37 R MISC RELAY (FLIGHT DATA RECORDER SYSTEM ONLY) FOR NHA/OTHER SYS DET SEE: 24-00-58-05C	108108	RF
- 4	284N1127-139	PANEL INSTL-P37 R MISC RELAY (FLIGHT DATA RECORDER SYSTEM ONLY) FOR NHA/OTHER SYS DET SEE: 24-00-58-05C	109120	RF

MISSING ITEM NUMBERS NOT APPLICABLE

- ITEM NOT ILLUSTRATED

BOEING PROPRIETARY - Copyright © - Unpublished Work - See title page for details.

FIG ITEM	PART NUMBER	1 2 3 4 5 6 7 NOMENCLATURE	EFFECT FROM TO	UNITS PER ASSY
2D				
- 8	MODREF31945	PANEL INSTL-P37 R MISC RELAY (FLIGHT DATA RECORDER SYSTEM ONLY) MODULE NUMBER: 284N1127-169 REV B FOR OTHER SYS DETAILS SEE: 11-36-12-02A 21-25-71-02D 21-44-71-02D 21-45-31-01D 21-51-55-01D 21-58-71-02D 21-61-71-02D 23-31-51-05 24-21-51-05 24-51-01-02 24-51-02-03 24-51-58-02D 27-62-71-03D 28-22-71-03D 29-21-71-01D 30-11-71-02D 30-21-71-03D 30-31-71-02D 30-32-71-02D 30-33-71-02D 30-34-51-01D 31-01-37-10 32-09-02-04D 32-42-71-02D 32-61-71-02D 33-43-55-01D 33-51-71-01D 34-12-71-02D 34-25-50-01D 34-61-52-01D 35-21-71-02D 36-11-71-02D 38-15-71-02D 73-21-55-01D 74-31-71-02D 76-11-71-02D 77-12-71-01D 78-34-71-02D 78-36-71-02D 80-11-71-02D	103103	1

MISSING ITEM NUMBERS NOT APPLICABLE

- ITEM NOT ILLUSTRATED

BOEING PROPRIETARY - Copyright © - Unpublished Work - See title page for details.

FIG ITEM	PART NUMBER	1 2 3 4 5 6 7 NOMENCLATURE	EFFECT FROM TO	UNITS PER ASSY
2D				
- 9	MODREF34305	PANEL INSTL-P37 R MISC RELAY (FLIGHT DATA RECORDER SYSTEM ONLY) MODULE NUMBER: 284N1127-169 REV C FOR OTHER SYS DETAILS SEE: 11-36-12-02A 21-25-71-02D 21-44-71-02D 21-45-31-01D 21-51-55-01D 21-58-71-02D 21-61-71-02D 23-31-51-05 24-21-51-05 24-51-01-02 24-51-02-03 24-51-58-02D 27-62-71-03D 28-22-71-03D 29-21-71-01D 30-11-71-02D 30-21-71-03D 30-31-71-02D 30-32-71-02D 30-33-71-02D 30-34-51-01D 31-01-37-10 32-09-02-04D 32-42-71-02D 32-61-71-02D 33-43-55-01D 33-51-71-01D 34-12-71-02D 34-25-50-01D 34-61-52-01D 35-21-71-02D 36-11-71-02D 38-15-71-02D 73-21-55-01D 74-31-71-02D 76-11-71-02D 77-12-71-01D 78-34-71-02D 78-36-71-02D 80-11-71-02D	104105	1

MISSING ITEM NUMBERS NOT APPLICABLE

- ITEM NOT ILLUSTRATED

BOEING PROPRIETARY - Copyright © - Unpublished Work - See title page for details.

FIG ITEM	PART NUMBER	1 2 3 4 5 6 7 NOMENCLATURE	EFFECT FROM TO	UNITS PER ASSY
2D				
245	W260F4AM11	.RELAY-	108120	1
		SUPPLIER CODE:		
		VF0219		
		SPECIFICATION NUMBER:		
		BACR13CD2		
		OPTIONAL PART:		
		BR16S233		
		V09026		
		EE4AA005		
		V35344		
		3SAV1338A2		
		V01526		
		HFW1206K03		
		V58614		
		HFW1204K01		
		V71482		
		ELECTRICAL EQUIP NUMBER:		
		K00554		
		PRE ALERT SB:		
		34A0222		
255	W260F4AM11	.RELAY-	108120	3
		SUPPLIER CODE:		
		VF0219		
		SPECIFICATION NUMBER:		
		BACR13CD2		
		OPTIONAL PART:		
		BR16S233		
		V09026		
		EE4AA005		
		V35344		
		3SAV1338A2		
		V01526		
		HFW1206K03		
		V58614		
		HFW1204K01		
		V71482		
		ELECTRICAL EQUIP NUMBER:		
		K00015		
		K10813		
		K10677		

MISSING ITEM NUMBERS NOT APPLICABLE

– ITEM NOT ILLUSTRATED

BOEING PROPRIETARY - Copyright © - Unpublished Work - See title page for details.

FIG ITEM	PART NUMBER	1 2 3 4 5 6 7 NOMENCLATURE	EFFECT FROM TO	UNITS PER ASSY
2D				
275	W260F4AM11	.RELAY-	103106	3
		SUPPLIER CODE:		
		V F0219		
		SPECIFICATION NUMBER:		
		BACR13CD2		
		OPTIONAL PART:		
		BR16S233		
		V09026		
		EE4AA005		
		V35344		
		3SAV1338A2		
		V01526		
		HFW1206K03		
		V58614		
		HFW1204K01		
		V71482		
		ELECTRICAL EQUIP NUMBER:		
		K00015		
		K10677		
		K10813		
- 300	286N1270-360	WIRE BUNDLE ASSY-	108120	RF
		REWORKED BY ALERT SB:		
		34A0222		
- 302	286N1270-602	WIRE BUNDLE ASSY	103106	RF
320	RSE120026	.SOCKET-	103106	3
		SUPPLIER CODE:		
		V58982		
		SPECIFICATION NUMBER:		
		BACS16AG1		
		OPTIONAL PART:		
		451120-026		
		V58982		
		ELECTRICAL EQUIP NUMBER:		
		D00687		
		D01809		
		D04015		
		WIRING DIAGRAM REF:		
		313142		
		313141		

MISSING ITEM NUMBERS NOT APPLICABLE

- ITEM NOT ILLUSTRATED

BOEING PROPRIETARY - Copyright © - Unpublished Work - See title page for details.

FIG ITEM	PART NUMBER	1 2 3 4 5 6 7 NOMENCLATURE	EFFECT FROM TO	UNITS PER ASSY
2D				
325	RSE120026	.SOCKET- SUPPLIER CODE: V58982 SPECIFICATION NUMBER: BACS16AG1 OPTIONAL PART: 451120-026 V58982 ELECTRICAL EQUIP NUMBER: D00687 D01809 D04015 WIRING DIAGRAM REF: 313112 313141 313142	108120	3
335	RSE120026	.SOCKET- SUPPLIER CODE: V58982 SPECIFICATION NUMBER: BACS16AG1 OPTIONAL PART: 451120-026 V58982 ELECTRICAL EQUIP NUMBER: D00585 WIRING DIAGRAM REF: 313141 PRE ALERT SB: 34A0222	108120	1

MISSING ITEM NUMBERS NOT APPLICABLE

– ITEM NOT ILLUSTRATED

BOEING PROPRIETARY - Copyright © - Unpublished Work - See title page for details.

AIRCRAFT INTEGRATED DATA SYSTEM (AIDS)

BOEING PROPRIETARY - Copyright © - Unpublished Work - See title page for details.

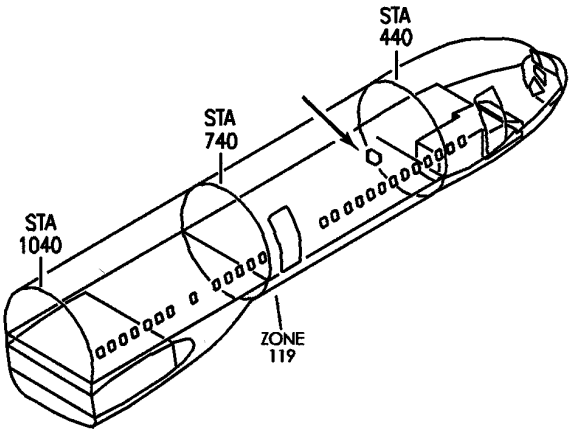

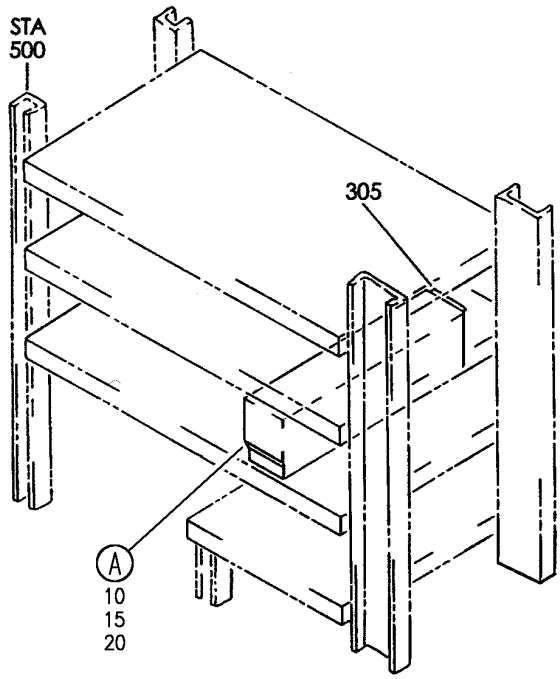

Y 31350102 SHT 1 REV 295

EQUIPMENT INSTL-MAIN ELECTRONICS EQPT CTR (QUICK ACCESS RECORDER ONLY)
FIGURE 2 (SHEET 1)

BOEING PROPRIETARY - Copyright © - Unpublished Work - See title page for details.

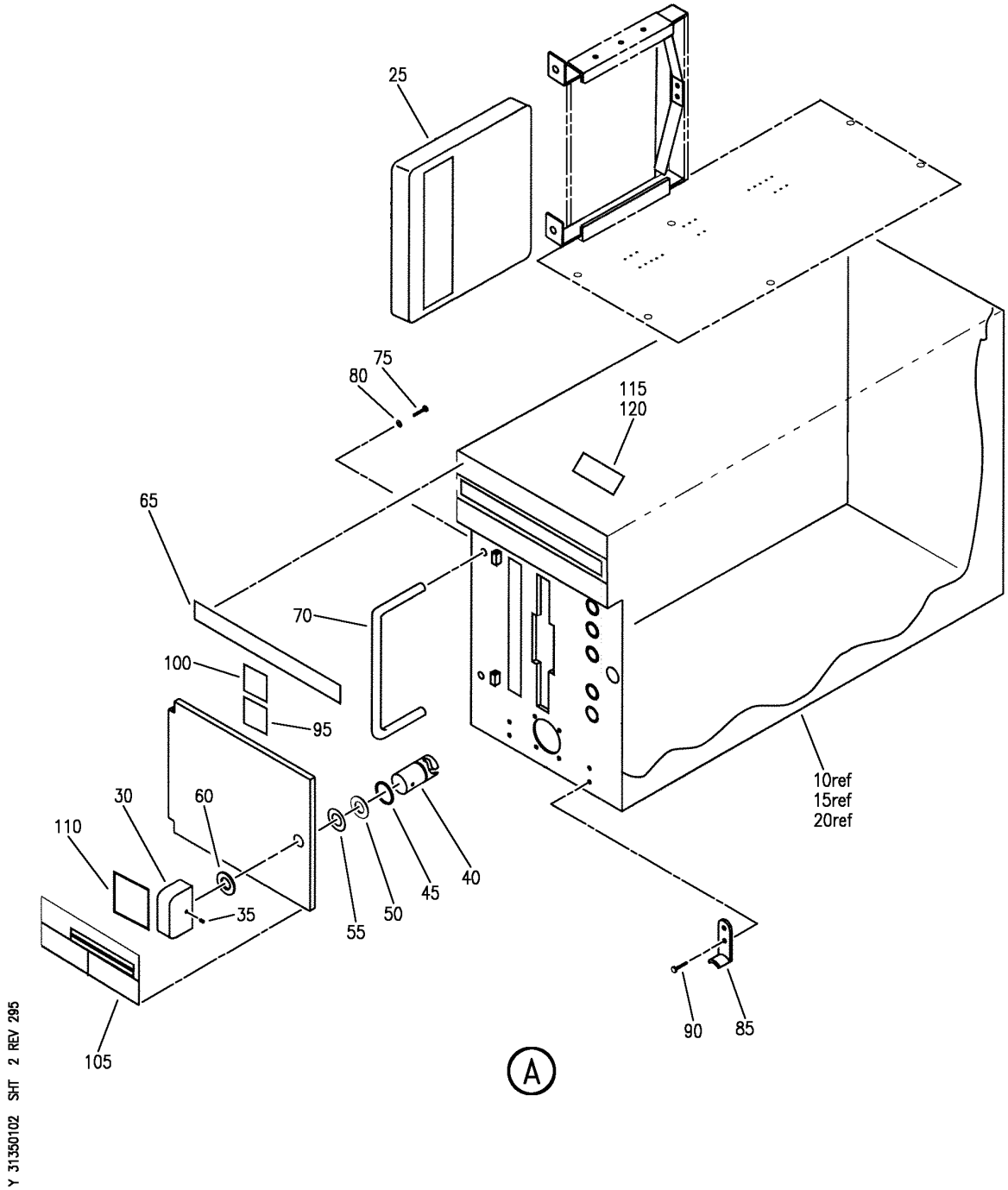

EQUIPMENT INSTL-MAIN ELECTRONICS EQPT CTR (QUICK ACCESS RECORDER ONLY)
FIGURE 2 (SHEET 2)

BOEING PROPRIETARY - Copyright © - Unpublished Work - See title page for details.

FIG ITEM	PART NUMBER	1 2 3 4 5 6 7 NOMENCLATURE	EFFECT FROM TO	UNITS PER ASSY
2				
		EQUIPMENT INSTL-MAIN ELECTRONICS EQPT CTR (QUICK ACCESS RECORDER ONLY)	002004 006100 121949 952999	
- 1	284N1800-16	EQUIPMENT INSTL-MAIN ELECTRONICS EQPT CTR (QUICK ACCESS RECORDER ONLY) FOR NHA/OTHER SYS DET SEE: 24-00-58-01	121503 904949	RF
- 1	284N1800-32	EQUIPMENT INSTL-MAIN ELECTRONICS EQPT CTR (QUICK ACCESS RECORDER ONLY) FOR NHA/OTHER SYS DET SEE: 24-00-58-01	952999	RF
- 1	284N1800-34	EQUIPMENT INSTL-MAIN ELECTRONICS EQPT CTR (QUICK ACCESS RECORDER ONLY) FOR NHA/OTHER SYS DET SEE: 24-00-58-01	002004 006100	RF
- 2	284N1800-88	EQUIPMENT INSTL-MAIN ELECTRONICS EQPT CTR (QUICK ACCESS RECORDER ONLY) FOR NHA/OTHER SYS DET SEE: 24-00-58-05E	505505	RF
- 2	284N1800-190	EQUIPMENT INSTL-MAIN ELECTRONICS EQPT CTR (QUICK ACCESS RECORDER ONLY) FOR NHA/OTHER SYS DET SEE: 24-00-58-05E	504504 506903	RF
10	D51434-1	.RECORDER-AIRBORNE INTEGRATED DATA SYS QUICK ACCESS (CUSTOMER FURNISHED) SUPPLIER CODE: VK1474 FUNCTIONAL DESCRIPTION: PROVIDES EXPANDED DATA AND REPORT STORAGE CAPABILITY USING A MAGNETIC TAPE MEDIA. ELECTRICAL EQUIP NUMBER: M10387 COMPONENT MAINT MANUAL REF: 31-32-56	002004 006100 904949	1

MISSING ITEM NUMBERS NOT APPLICABLE

- ITEM NOT ILLUSTRATED

BOEING PROPRIETARY - Copyright © - Unpublished Work - See title page for details.

FIG ITEM	PART NUMBER	1 2 3 4 5 6 7 NOMENCLATURE	EFFECT FROM TO	UNITS PER ASSY
2				
10	D51434-1	.RECORDER-AIRBORNE INTEGRATED DATA SYS QUICK ACCESS SUPPLIER CODE: VK1474 FUNCTIONAL DESCRIPTION: PROVIDES EXPANDED DATA AND REPORT STORAGE CAPABILITY USING A MAGNETIC TAPE MEDIA. ELECTRICAL EQUIP NUMBER: M10387 COMPONENT MAINT MANUAL REF: 31-32-56	121503	1
10	D51442	.RECORDER-QUICK ACCESS (CUSTOMER FURNISHED) SUPPLIER CODE: VK1474 ELECTRICAL EQUIP NUMBER: M10387 QUALIFIED I/W DATA: D51442 FULLY INTERCHANGEABLE WITH D51434 FOR 747-400 757-200, 767-300 MODELS ONLY. QUALIFIED SB I/W DATA: (REPLACES PT. NO. D51434 AFTER MOD 31D166) POST AIRLINE MOD: 31D166 VBAA	504903	1
15	D17724	.CASSETTE-QAR (CUSTOMER FURNISHED) SUPPLIER CODE: VK1474	121503 904949	1
15	D50760	.CASSETTE-QAR (CUSTOMER FURNISHED) SUPPLIER CODE: VK1474	002004 006100	1

MISSING ITEM NUMBERS NOT APPLICABLE

– ITEM NOT ILLUSTRATED

BOEING PROPRIETARY - Copyright © - Unpublished Work - See title page for details.

FIG ITEM	PART NUMBER	1 2 3 4 5 6 7 NOMENCLATURE	EFFECT FROM TO	UNITS PER ASSY
2				
20	D17666	.RECORDER-AIRBORNE INTEGRATED DATA SYS QUICK ACCESS (CUSTOMER FURNISHED) SUPPLIER CODE: VK1474 ELECTRICAL EQUIP NUMBER: M10387 QUALIFIED I/W DATA: D17666 I/W D51434 SUBJECT TO CUSTOMER PREFERENCE	904949	1
- 300	286N1433-002	WIRE BUNDLE ASSY- REWORKED BY ALERT SB: 34A0222	904949	RF
- 300	286N1433-016	WIRE BUNDLE ASSY- REWORKED BY ALERT SB: 34A0222	011017	RF
- 300	286N1433-017	WIRE BUNDLE ASSY- REWORKED BY ALERT SB: 34A0222	121503	RF
- 300	286N1433-026	WIRE BUNDLE ASSY- REWORKED BY SB: 34-0200 REWORKED BY ALERT SB: 34A0222	952999	RF
- 300	286N1433-027	WIRE BUNDLE ASSY- REWORKED BY ALERT SB: 34A0222	002004 006010 018100 952999	RF
- 301	286N1433-346	WIRE BUNDLE ASSY- REWORKED BY ALERT SB: 34A0222	504903	RF
305	BACC66H21C5001	.CONNECTOR- ELECTRICAL EQUIP NUMBER: D00777 WIRING DIAGRAM REF: 313111	002004 006100 121949	1

MISSING ITEM NUMBERS NOT APPLICABLE

- ITEM NOT ILLUSTRATED

BOEING PROPRIETARY - Copyright © - Unpublished Work - See title page for details.

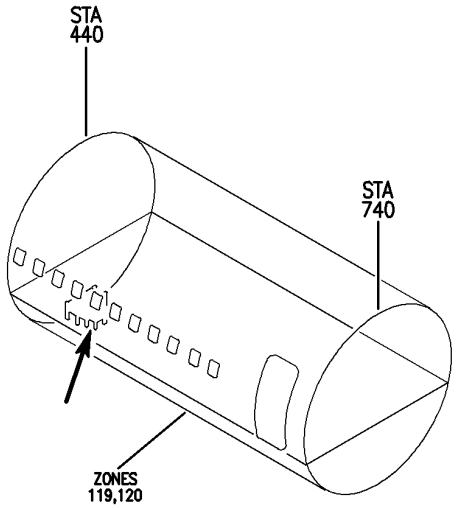

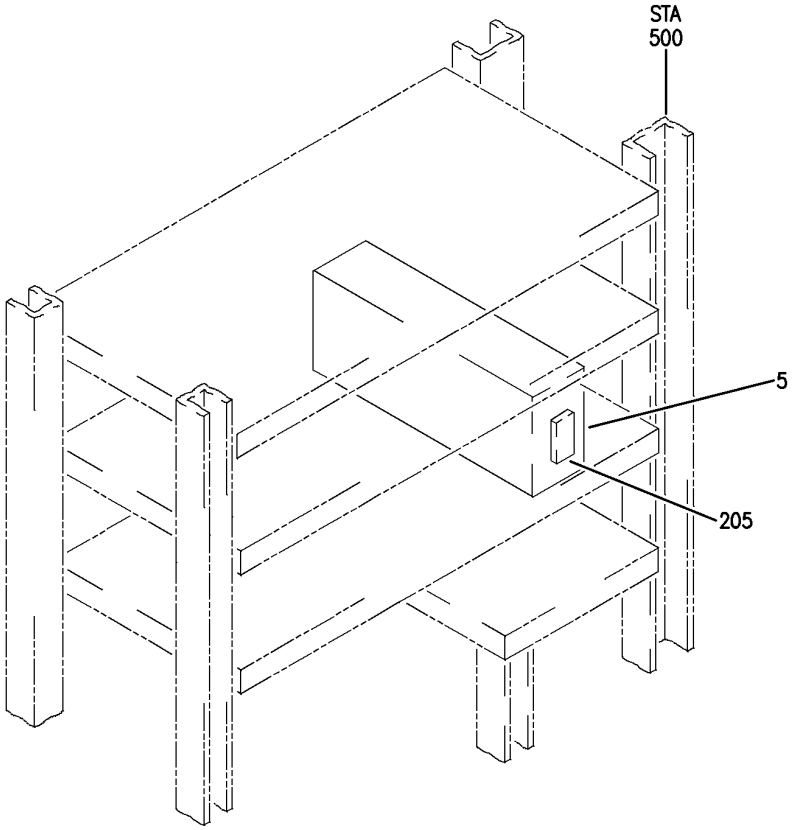

Y 31350108 REV 223

EQUIPMENT INSTL-MAIN ELEX EQPT CTR QUICK ACCESS RECORDER
FIGURE 8

BOEING PROPRIETARY - Copyright © - Unpublished Work - See title page for details.

FIG ITEM	PART NUMBER	1 2 3 4 5 6 7 NOMENCLATURE	EFFECT FROM TO	UNITS PER ASSY
8				
		EQUIPMENT INSTL-MAIN ELEX EQPT CTR QUICK ACCESS RECORDER	103106	
- 1	MODREF31515	EQUIPMENT INSTL-MAIN ELEX EQPT QUICK ACCESS RECORDER MODULE NUMBER: 284N4000-310034 REV A	103105	1
- 1	MODREF136077	EQUIPMENT INSTL-MAIN ELEX EQPT QUICK ACCESS RECORDER MODULE NUMBER: 284N4000-310034 REV B	106106	1
5	D52000-42200	.RECORDER- SUPPLIER CODE: VK1474 ELECTRICAL EQUIP NUMBER: M10387	103106	1
- 200	286N1433-601	WIRE BUNDLE ASSY	103105	RF
- 200	286N1433-602	WIRE BUNDLE ASSY	106106	RF
205	BCREF3153	.CONNECTOR- OVERLENGTH PART NUMBER: DPXBMA67-33S0048 ELECTRICAL EQUIP NUMBER: D00777 WIRING DIAGRAM REF: 313501	103106	1

MISSING ITEM NUMBERS NOT APPLICABLE

- ITEM NOT ILLUSTRATED

BOEING PROPRIETARY - Copyright © - Unpublished Work - See title page for details.

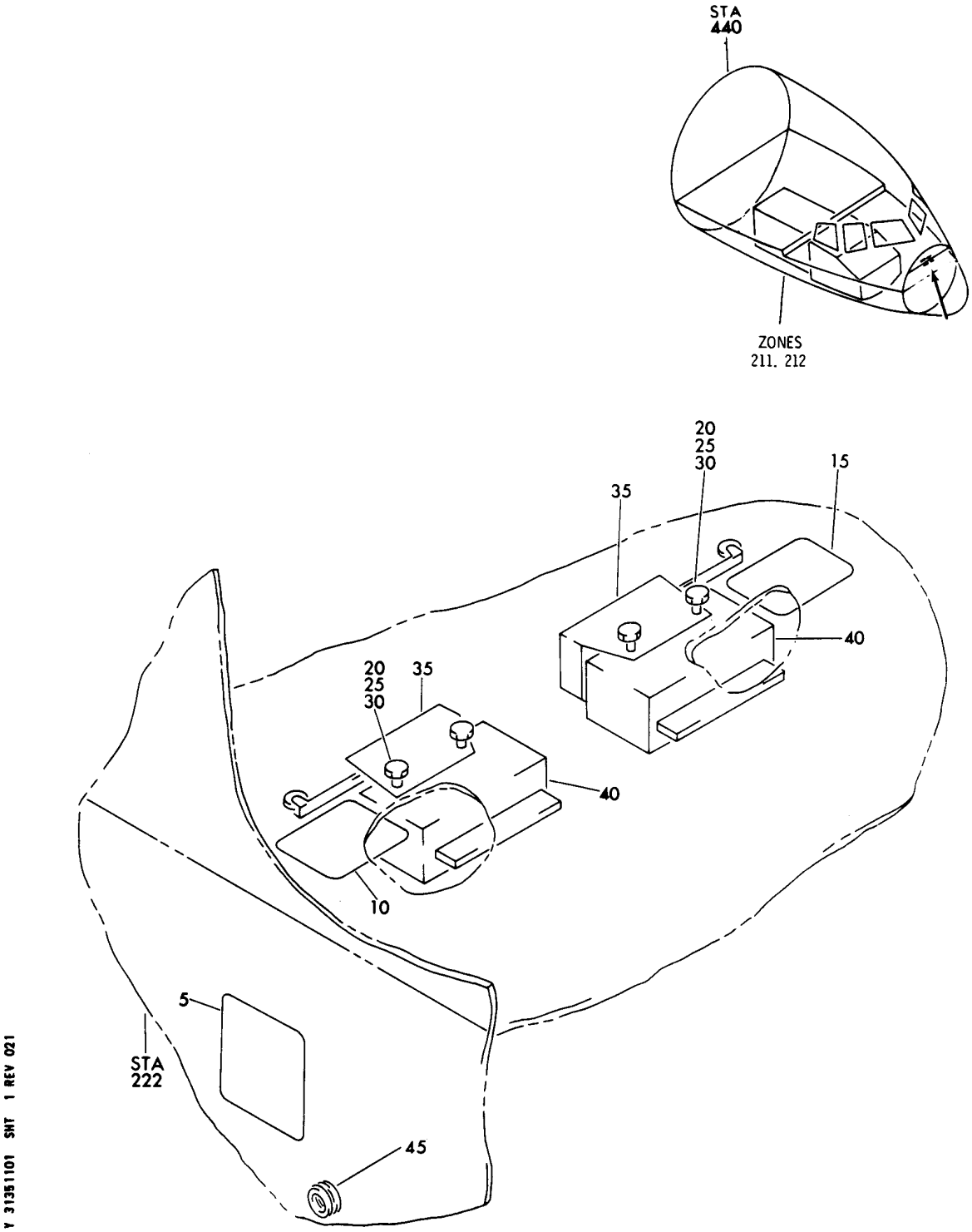

SWITCH INSTL-BRAKE AIDS
FIGURE 1

BOEING PROPRIETARY - Copyright © - Unpublished Work - See title page for details.

FIG ITEM	PART NUMBER	1 2 3 4 5 6 7 NOMENCLATURE	EFFECT FROM TO	UNITS PER ASSY
1				
		SWITCH INSTL-BRAKE AIDS	103106 108949	
- 1	274N2013-1	SWITCH INSTL-BRAKE AIDS FOR NHA SEE: 32-00-00-23	904949	RF
- 1	274N2013-2	SWITCH INSTL-BRAKE AIDS FOR NHA SEE: 32-00-00-23 32-00-00-11	121903	RF
- 1	274N2013-3	SWITCH INSTL-BRAKE AIDS FOR NHA SEE: 32-00-00-13	108120	RF
- 2	MODREF8651	SWITCH INSTL-BRAKE AIDS MODULE NUMBER: 274N2013-3 REV A	103106	1
5	BAC27NCT0131	.MARKER-ALUMINUM FOIL- PLACARD CONTENT: S10308 S10309 (INSIDE)	103106 108949	1
10	BAC27NCT0129	.MARKER-ALUMINUM FOIL- PLACARD CONTENT: RIGHT BRAKE S10309	103106 108949	1
15	BAC27NCT0130	.MARKER-ALUMINUM FOIL- PLACARD CONTENT: LEFT BRAKE S10308	103106 108949	1
20	NAS1801-06-18	.SCREW-	103106 108949	4
25	AN960KD6	.WASHER-	904949	4
25	AN960JD6	.WASHER-	103106 108903	4
30	BRH10C06D	.NUT- SUPPLIER CODE: V52828 SPECIFICATION NUMBER: BACN10JC06CD OPTIONAL PART: T6C632JCD V11815 NS202486-62 V80539 102LH9075-62W V72962 H51650-06BAC V15653	904949	4

MISSING ITEM NUMBERS NOT APPLICABLE

– ITEM NOT ILLUSTRATED

BOEING PROPRIETARY - Copyright © - Unpublished Work - See title page for details.

FIG ITEM	PART NUMBER	1 2 3 4 5 6 7 NOMENCLATURE	EFFECT FROM TO	UNITS PER ASSY
1				
30	BRH10A06	.NUT-	103106	4
		SUPPLIER CODE:	108903	
		V52828		
		SPECIFICATION NUMBER:		
		BACN10JC06		
		OPTIONAL PART:		
		H10-06BAC		
		V15653		
		RMLH9075-62W		
		V72962		
		VN303A62		
		V92215		
		96-62		
		V80539		
		NS202101-62		
		V80539		
		T6S632J		
		V11815		
35	ADH3721R2	.ACTUATOR	103106	2
		SUPPLIER CODE:	108949	
		V91929		
		SPECIFICATION NUMBER:		
		BACA12D2		
40	MS25008-1	.SWITCH-	103106	2
		ELECTRICAL EQUIP NUMBER:	108949	
		S10308		
		S10309		
45	RR2002-4B1J	.GROMMET	103106	1
		SUPPLIER CODE:	108949	
		V57268		
		SPECIFICATION NUMBER:		
		BACG20AF4B1J		
		OPTIONAL PART:		
		SZ6924-4B1J		
		V95272		
		701-4B1J		
		V07096		
		E4B1J		
		V60980		
		H4B1J		
		V60980		
		G6940-4B1J		
		V75345		

MISSING ITEM NUMBERS NOT APPLICABLE

– ITEM NOT ILLUSTRATED

BOEING PROPRIETARY - Copyright © - Unpublished Work - See title page for details.

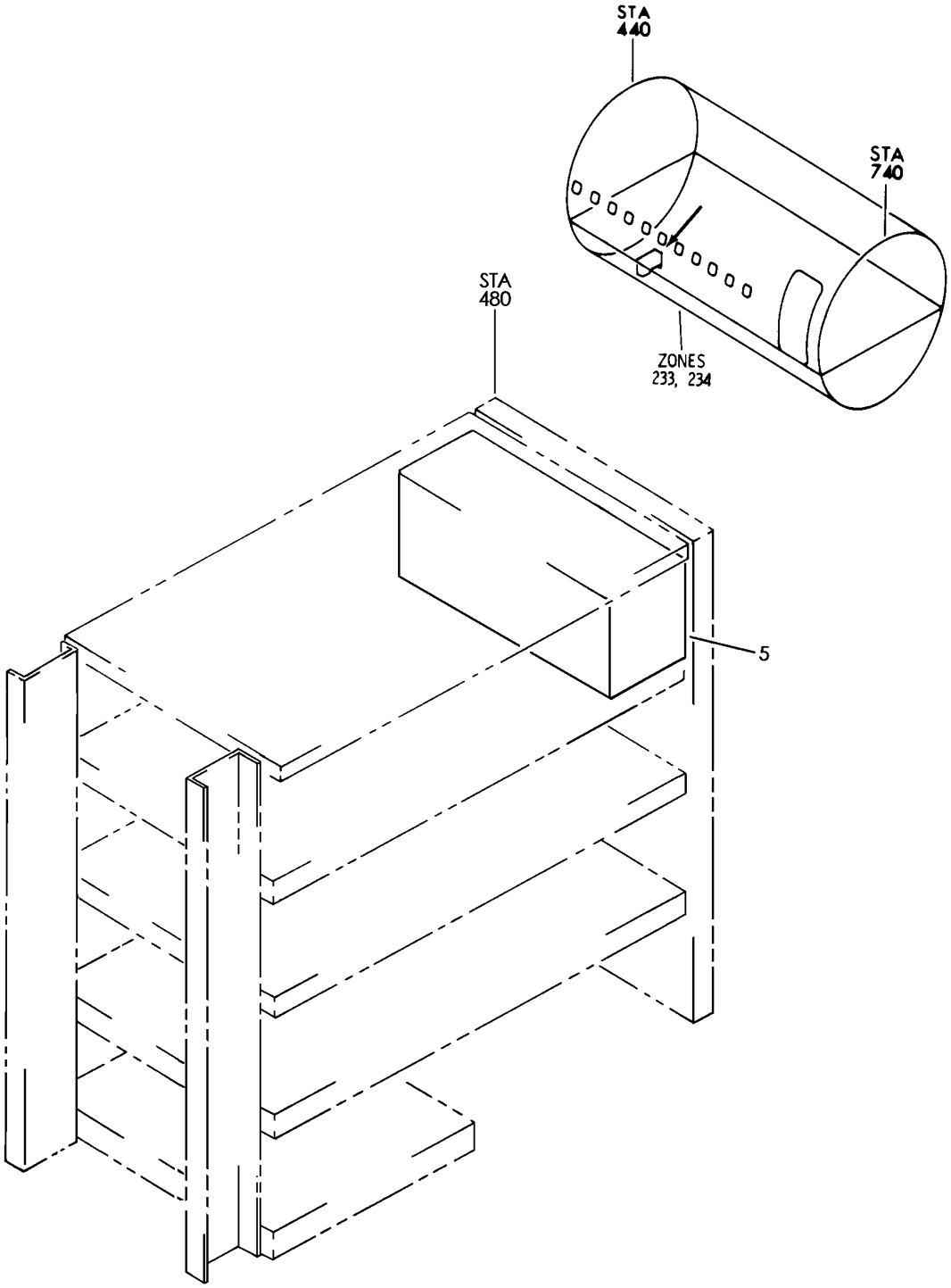

EQUIPMENT AND SOFTWARE INSTL- MAIN ELECTRONICS EQPT CTR (AIRCRAFT INTEGRATED DATA SYSTEM ONLY)
FIGURE 1

BOEING PROPRIETARY - Copyright © - Unpublished Work - See title page for details.

FIG ITEM	PART NUMBER	1 2 3 4 5 6 7 NOMENCLATURE	EFFECT FROM TO	UNITS PER ASSY
1		EQUIPMENT AND SOFTWARE INSTL- MAIN ELECTRONICS EQPT CTR (AIRCRAFT INTEGRATED DATA SYSTEM ONLY)	504903	
- 1	284N1800-88	EQUIPMENT INSTL-MAIN ELECTRONICS EQPT CTR (AIRCRAFT INTEGRATED DATA SYSTEM ONLY) FOR NHA/OTHER SYS DET SEE: 24-00-58-05E	505505	RF
- 1	284N1800-190	EQUIPMENT INSTL-MAIN ELECTRONICS EQPT CTR (AIRCRAFT INTEGRATED DATA SYSTEM ONLY) FOR NHA/OTHER SYS DET SEE: 24-00-58-05E	504504 506903	RF
5	2232000-02B	.MANAGEMENT UNIT-DATA (CUSTOMER FURNISHED) SUPPLIER CODE: V98571 ELECTRICAL EQUIP NUMBER: M10771	504903	1
- 75	286N1265-321	WIRE BUNDLE ASSY	504903	RF
- 80	BACC66H21C0101	.CONNECTOR- ELECTRICAL EQUIP NUMBER: D01465 WIRING DIAGRAM REF: 313501	504903	1
- 100	226N1002-3070	SOFTWARE INSTL-DMU PREMODULE FOR NHA SEE: 25-10-00-22	504903	RF
- 105	310ETDYA05-01	.SOFTWARE-ACMS (CUSTOMER FURNISHED) SUPPLIER CODE: V81205 MISCELLANEOUS DATA: DISKETTE QTY : 1 DISK USED WITH: 2232000-02B FOR SPARES PROCURE: 2243289-01 V98571	504903	1

MISSING ITEM NUMBERS NOT APPLICABLE

- ITEM NOT ILLUSTRATED

BOEING PROPRIETARY - Copyright © - Unpublished Work - See title page for details.

ENGINE INDICATION AND CREW ALERTING SYSTEM (EICAS)

BOEING PROPRIETARY - Copyright © - Unpublished Work - See title page for details.

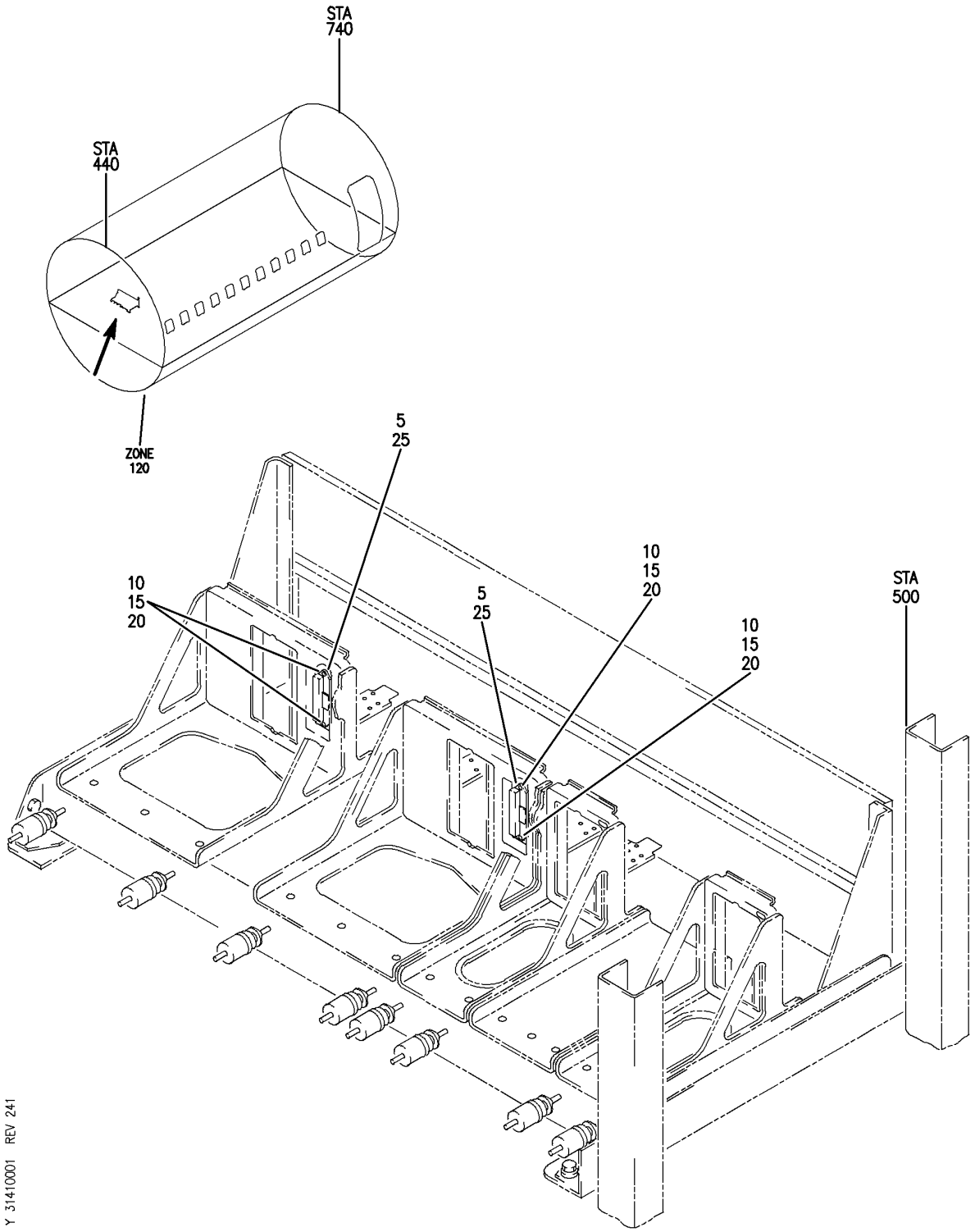

SHELF ASSY-ELECTRONICS EQPT CTR E4-2 (INDICATING RECORDS SYSTEM ONLY)
FIGURE 1

BOEING PROPRIETARY - Copyright © - Unpublished Work - See title page for details.

FIG ITEM	PART NUMBER	1 2 3 4 5 6 7 NOMENCLATURE	EFFECT FROM TO	UNITS PER ASSY
1				
		SHELF ASSY-ELECTRONICS EQPT CTR E4-2 (INDICATING RECORDS SYSTEM ONLY)	103105	
- 1	MODREF31295	SHELF ASSY-ELECTRONICS EQPT CTR E4-2 (INDICATING RECORDS SYSTEM ONLY) MODULE NUMBER: 284N1542-67 REV D FOR OTHER SYS DETAILS SEE: 25-70-55-11K 27-18-51-02	103105	1
5	BACC50AL1	.COVER	103105	2
10	BACS53E1	.STUD	103105	4
15	NAS1149DN616J	.WASHER	103105	4
20	PLH506CD	.NUT SUPPLIER CODE: VF0224 SPECIFICATION NUMBER: BACN10YR06CD OPTIONAL PART: H52732-06CD V15653	103105	4
25	RBDSC2	.DIPSWITCH- SUPPLIER CODE: V09922 SPECIFICATION NUMBER: BACM15J2 ELECTRICAL EQUIP NUMBER: M01011 M01012	103105	2

MISSING ITEM NUMBERS NOT APPLICABLE

- ITEM NOT ILLUSTRATED

BOEING PROPRIETARY - Copyright © - Unpublished Work - See title page for details.

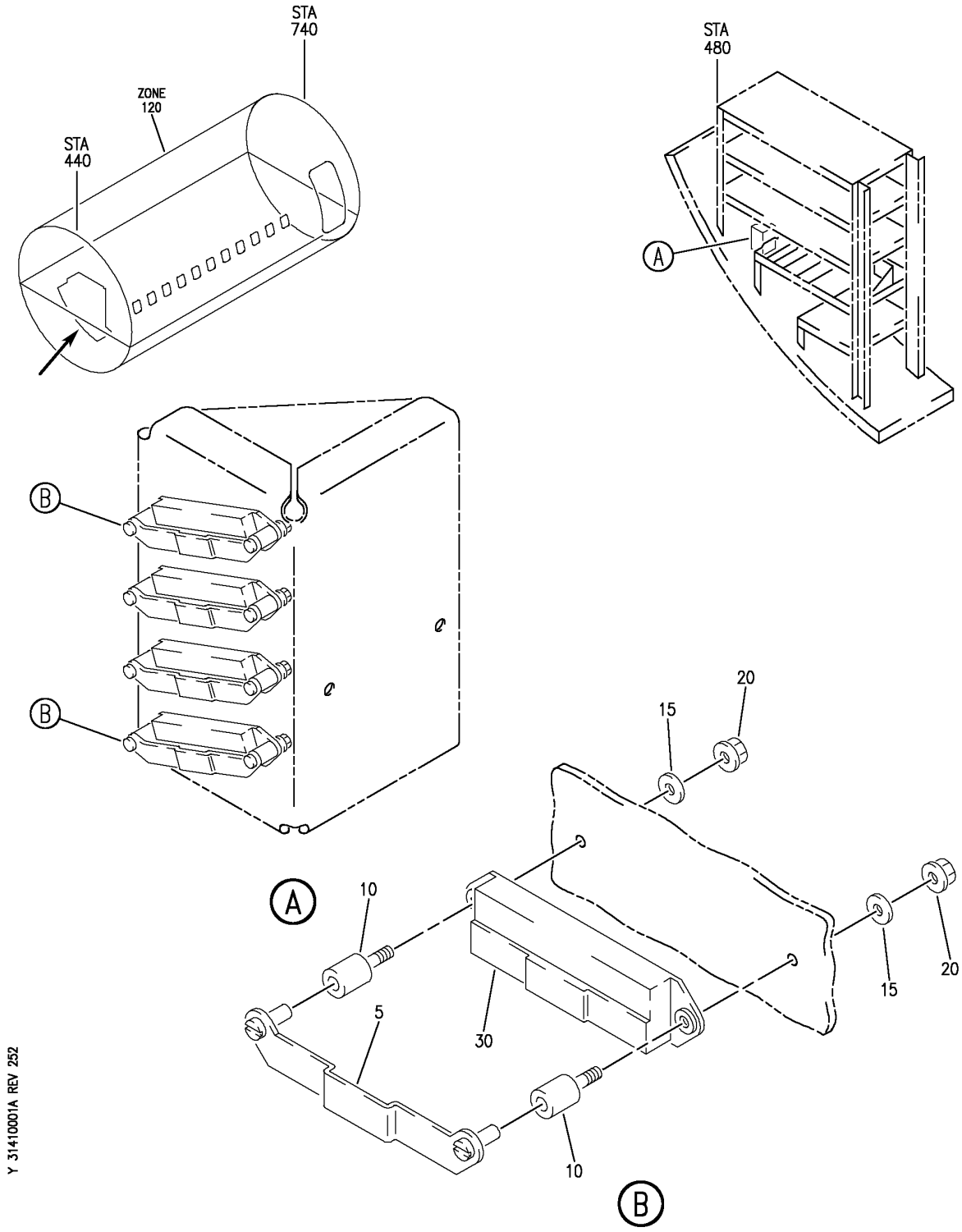

SHELF ASSY-ELECTRONICS EQPT CTR E4-3 (INDICATING RECORDS SYSTEM ONLY)
FIGURE 1A

BOEING PROPRIETARY - Copyright © - Unpublished Work - See title page for details.

FIG ITEM	PART NUMBER	1 2 3 4 5 6 7 NOMENCLATURE	EFFECT FROM TO	UNITS PER ASSY
1A				
		SHELF ASSY-ELECTRONICS	103106	
		EQPT CTR E4-3 (INDICATING		
		RECORDS SYSTEM ONLY)		
- 1	MODREF31726	SHELF ASSY-ELECTRONICS	103106	1
		EQPT CTR E4-3 (INDICATING		
		RECORDS SYSTEM ONLY)		
		MODULE NUMBER:		
		284N1543-75 REV A		
		FOR OTHER SYS DETAILS SEE:		
		23-22-08-01		
		25-70-55-16H		
5	BACC50AL1	.COVER	103106	4
10	BACS53E1	.STUD	103106	8
15	NAS1149DN616J	.WASHER	103106	8
20	PLH506CD	.NUT	103106	8
		SUPPLIER CODE:		
		VF0224		
		SPECIFICATION NUMBER:		
		BACN10YR06CD		
		OPTIONAL PART:		
		H52732-06CD		
		V15653		
30	RBDSC2	.DIPSWITCH-	103106	4
		SUPPLIER CODE:		
		V09922		
		SPECIFICATION NUMBER:		
		BACM15J2		
		ELECTRICAL EQUIP NUMBER:		
		M11766		
		M11767		
		M11768		
		M11772		

MISSING ITEM NUMBERS NOT APPLICABLE

- ITEM NOT ILLUSTRATED

BOEING PROPRIETARY - Copyright © - Unpublished Work - See title page for details.

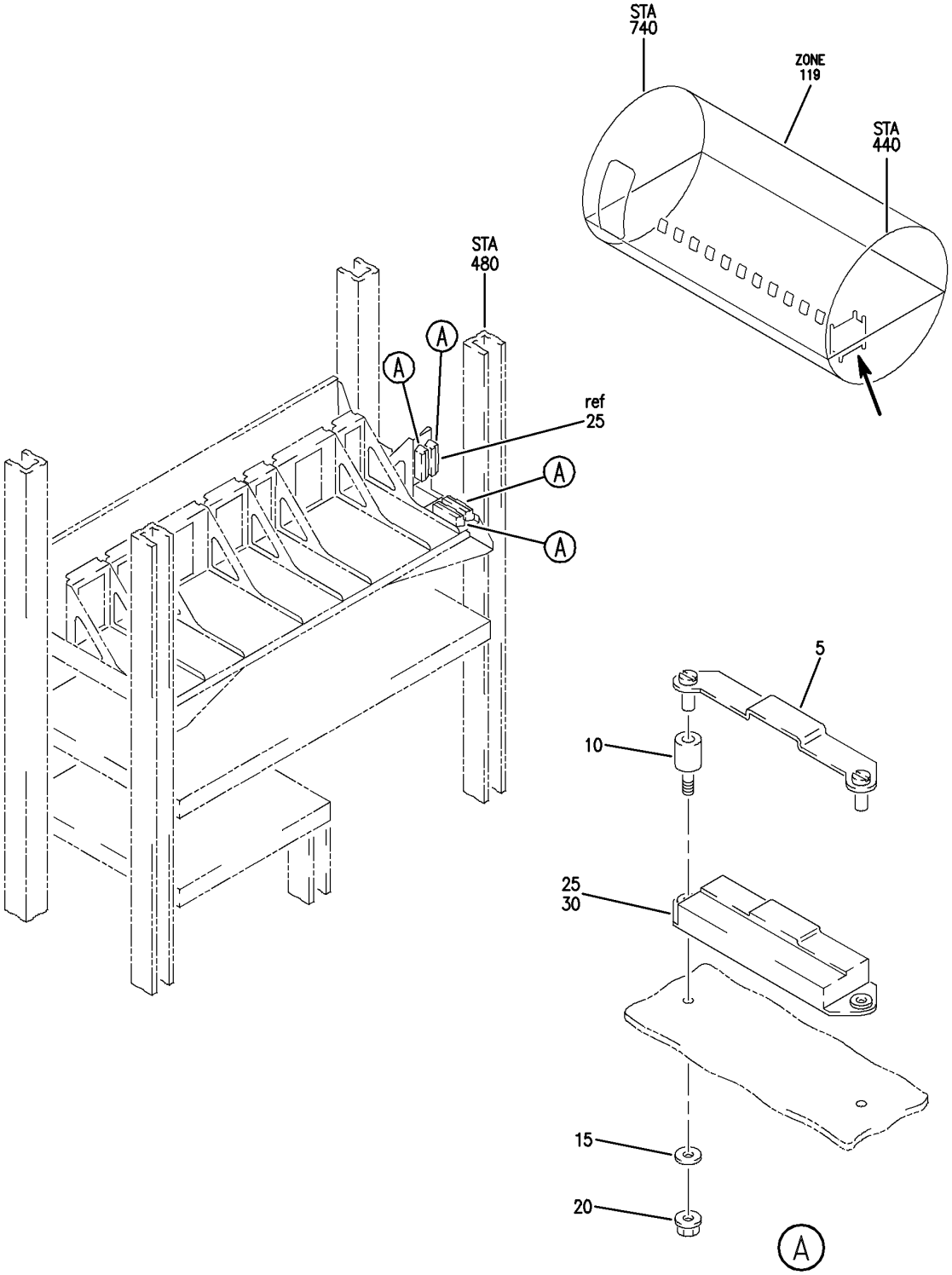

SHELF ASSY-ELEC EQPT CTR E3-2 (INDICATING RECORDS SYSTEM ONLY)
FIGURE 1B

BOEING PROPRIETARY - Copyright © - Unpublished Work - See title page for details.

FIG ITEM	PART NUMBER	1 2 3 4 5 6 7 NOMENCLATURE	EFFECT FROM TO	UNITS PER ASSY
1B				
		SHELF ASSY-ELEC EQPT CTR E3-2 (INDICATING RECORDS SYSTEM ONLY)	103106	
- 1	MODREF22592	SHELF ASSY-ELECT EQPT CTR E3-2 (INDICATING RECORDS SYSTEM ONLY) MODULE NUMBER: 284N1532-35 REV B	103106	1
5	BACC50AL1	.COVER	103106	4
10	BACS53E1	.STUD	103106	8
15	NAS1149DN616J	.WASHER	103106	8
20	PLH506CD	.NUT SUPPLIER CODE: VF0224 SPECIFICATION NUMBER: BACN10YR06CD OPTIONAL PART: H52732-06CD V15653	103106	8
25	BACM15J3	.DIPSWITCH	103106	1
30	RBDSC2	.DIPSWITCH SUPPLIER CODE: V09922 SPECIFICATION NUMBER: BACM15J2	103106	3

MISSING ITEM NUMBERS NOT APPLICABLE

- ITEM NOT ILLUSTRATED

BOEING PROPRIETARY - Copyright © - Unpublished Work - See title page for details.

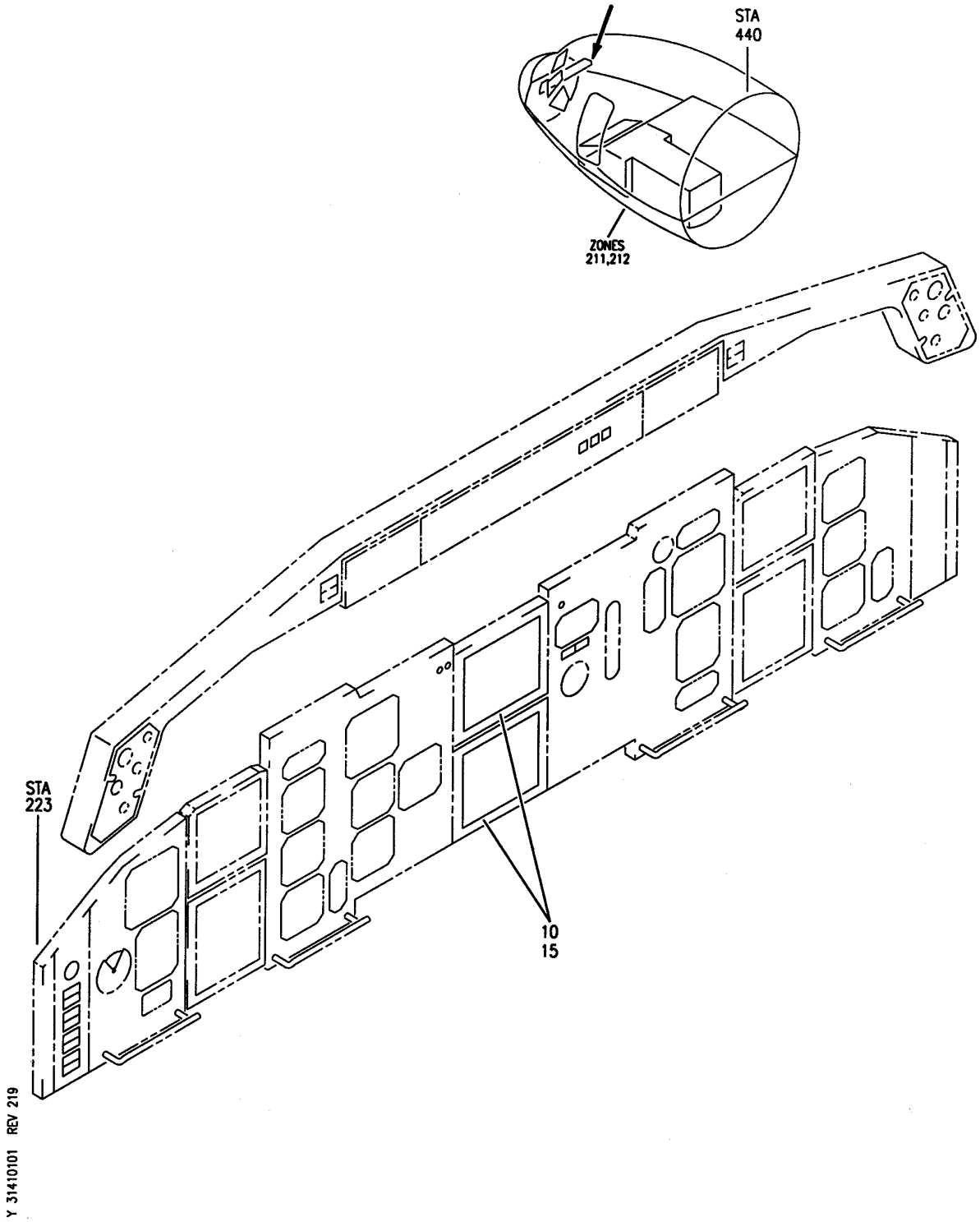

PANEL INSTL-FWD CAPT AND FIRST OFFICER PREMODULE (ENGINE INDICATING AND CREW ALERTING SYSTEM ONLY)
FIGURE 1

BOEING PROPRIETARY - Copyright © - Unpublished Work - See title page for details.

FIG ITEM	PART NUMBER	1 2 3 4 5 6 7 NOMENCLATURE	EFFECT FROM TO	UNITS PER ASSY
1		PANEL INSTL-FWD CAPT AND FIRST OFFICER PREMODULE (ENGINE INDICATING AND CREW ALERTING SYSTEM ONLY)	002004 006999	
- 1	233N2103-1	PANEL INSTL-CAPT AND FIRST OFFICER PREMODULE (ENGINE INDICATING AND CREW ALERTING SYSTEM ONLY) POSITION DATA: FWD FOR NHA/OTHER SYS DET SEE: 25-10-00-15	101102 108120 504903	RF
- 1	233N2101-1	PANEL INSTL-CAPT AND FIRST OFFICER (ENGINE INDICATING AND CREW ALERTING SYS ONLY) POSITION DATA: FWD VARIABLE DRAWING REF: 233N2101-5003 233N2101-5004 233N2101-5037 233N2101-5040 233N2101-5042 FOR NHA/OTHER SYS DET SEE: 25-10-00-05A	002004 006100 107107 121503 904999	RF
- 1	MODREF33340	PANEL INSTL-CAPT AND FIRST OFFICER PREMODULE (ENGINE INDICATING AND CREW ALERTING SYSTEM ONLY) MODULE NUMBER: 233N2103-100 REV A POSITION DATA: FWD FOR OTHER SYS DETAILS SEE: 27-58-00-02 31-11-11-01 31-11-26-01 32-41-52-02 33-11-51-13 33-13-51-01 33-14-51-01 34-13-05-01 34-22-03-01 34-22-04-01	103106	1

MISSING ITEM NUMBERS NOT APPLICABLE

- ITEM NOT ILLUSTRATED

BOEING PROPRIETARY - Copyright © - Unpublished Work - See title page for details.

FIG ITEM	PART NUMBER	1 2 3 4 5 6 7 NOMENCLATURE	EFFECT FROM TO	UNITS PER ASSY
1				
10	622-7999-003	.INDICATOR ASSY-ENG INDICATING AND CREW ALERTING SYS SUPPLIER CODE: V4V792 SPECIFICATION NUMBER: S242T404-611 MISCELLANEOUS DATA: 622-7999-013 IS IDENTICAL TO 622-7999-003 EXCEPT THAT THE BEZEL COLOR IS GRAY INSTEAD OF BROWN. 622-7999-013 IS INTERCHANGEABLE WITH 622-7999-003 SUBJECT TO CUSTOMER PREFERENCE SEE SPARES DWG. 242N5002 FOR 757 INTERCHANGEABILITY FOR 767 SEE 242T4213 ELECTRICAL EQUIP NUMBER: N10013 N10014 COMPONENT MAINT MANUAL REF: 34-22-60	002004 006999	2
10	622-5046-100	.INDICATOR ASSY-ENG INDICATING AND CREW ALERTING SYS SUPPLIER CODE: V4V792 SPECIFICATION NUMBER: S242T404-601 ELECTRICAL EQUIP NUMBER: N10013 N10014 COMPONENT MAINT MANUAL REF: 34-22-71	002004 006999	2

MISSING ITEM NUMBERS NOT APPLICABLE

– ITEM NOT ILLUSTRATED

BOEING PROPRIETARY - Copyright © - Unpublished Work - See title page for details.

FIG ITEM	PART NUMBER	1 2 3 4 5 6 7 NOMENCLATURE	EFFECT FROM TO	UNITS PER ASSY
1				
10	622-5046-101	.INDICATOR ASSY-ENG INDICATING AND CREW ALERTING SYS SUPPLIER CODE: V4V792 SPECIFICATION NUMBER: S242T404-602 ELECTRICAL EQUIP NUMBER: N10013 N10014 COMPONENT MAINT MANUAL REF: 34-22-71	002004 006999	2
10	622-7999-002	.INDICATOR ASSY-ENG INDICATING AND CREW ALERTING SYS SUPPLIER CODE: V4V792 FUNCTIONAL DESCRIPTION: CATHODE RAY TUBE USED AS AN HSI TO DISPLAY INERTIAL REFERENCE SYSTEM GENERATED TRACK AND HEADING AND AS A DISPLAY UNIT FOR THE EICAS SYSTEM SPECIFICATION NUMBER: S242T404-610 ELECTRICAL EQUIP NUMBER: N10013 N10014 COMPONENT MAINT MANUAL REF: 34-22-61	002004 006999	2
15	025-0767-001	..CAP-CONDUCTIVE SUPPLIER CODE: V71468 CONFIG CHG DATA FROM A CMM: SUPSD BY DPXB60	002004 006999	1
15	DPXB60	..CAP-CONDUCTIVE SUPPLIER CODE: V71468 CONFIG CHG DATA FROM A CMM: SUPERSEDES 025-0767-001 OPTIONAL PART: 2504800 V58960	002004 006999	1

MISSING ITEM NUMBERS NOT APPLICABLE

– ITEM NOT ILLUSTRATED

BOEING PROPRIETARY - Copyright © - Unpublished Work - See title page for details.

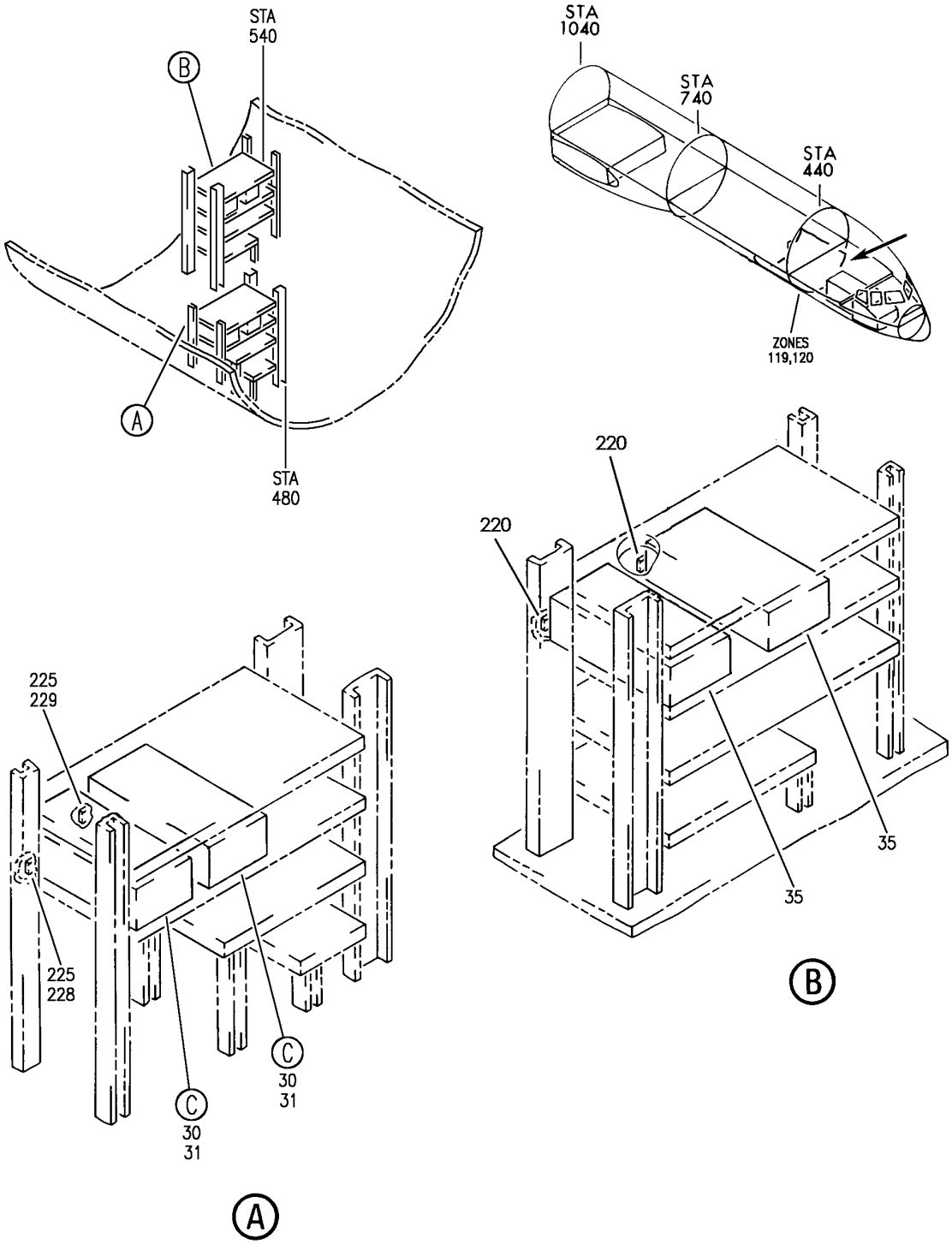

EQUIPMENT INSTL-MAIN ELECTRONICS EQPT CTR (EICAS COMPUTER ONLY)
FIGURE 1 (SHEET 1)

BOEING PROPRIETARY - Copyright © - Unpublished Work - See title page for details.

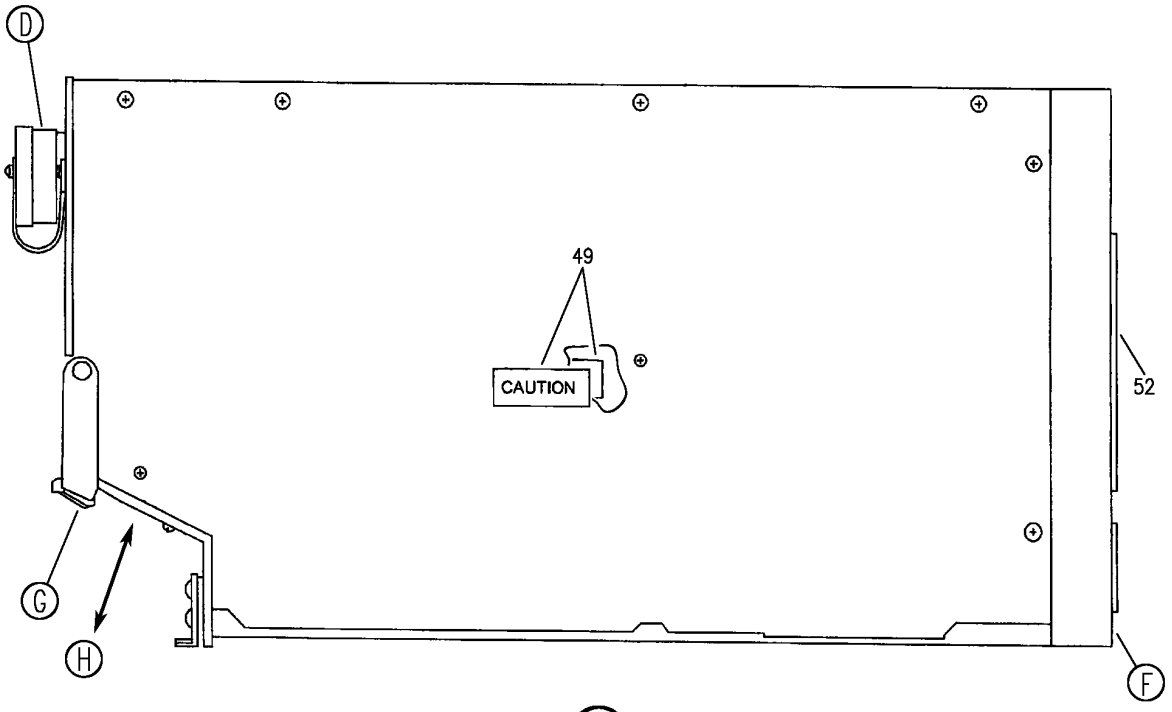

C

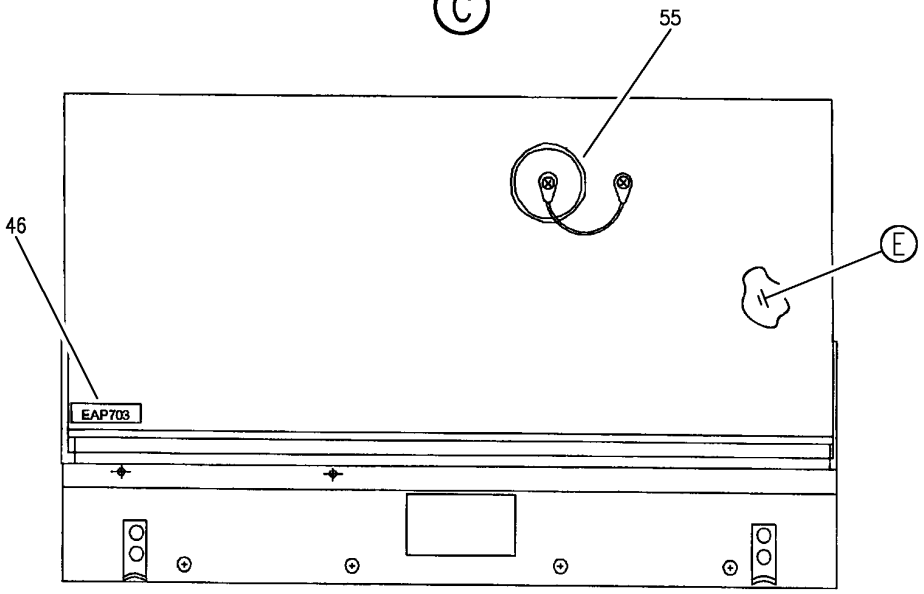

D

Y 31410201 SHT 2 REV 295

EQUIPMENT INSTL-MAIN ELECTRONICS EQPT CTR (EICAS COMPUTER ONLY)
FIGURE 1 (SHEET 2)

BOEING PROPRIETARY - Copyright © - Unpublished Work - See title page for details.

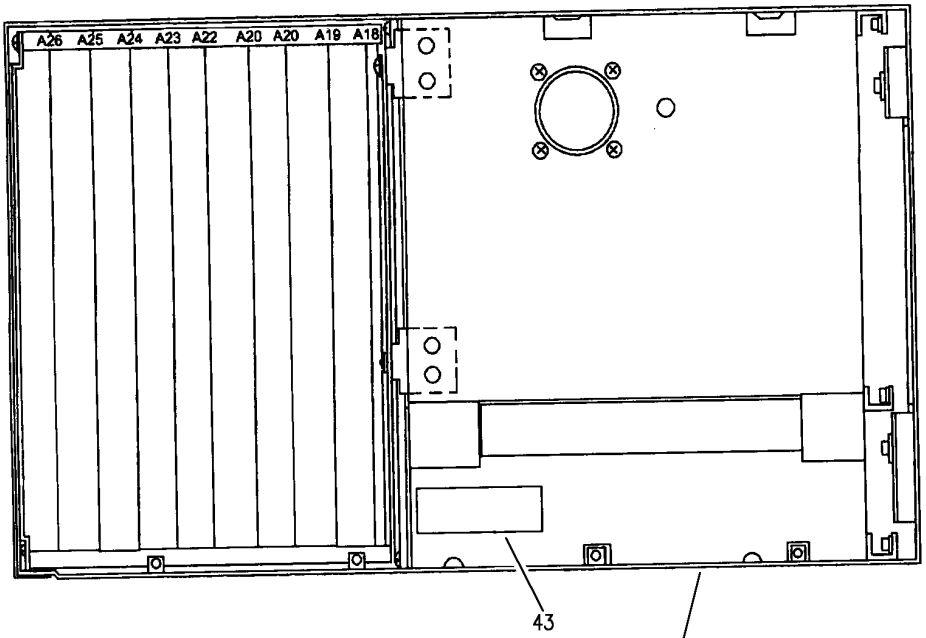

E

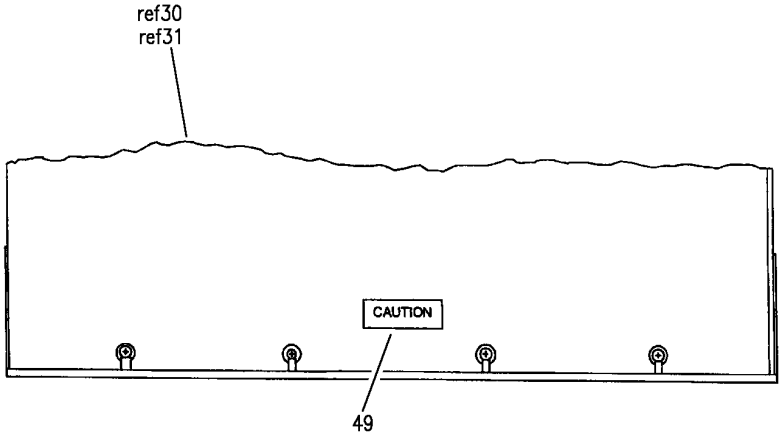

F

Y 31410201 SHT 3 REV 295

EQUIPMENT INSTL-MAIN ELECTRONICS EQPT CTR (EICAS COMPUTER ONLY)
FIGURE 1 (SHEET 3)

BOEING PROPRIETARY - Copyright © - Unpublished Work - See title page for details.

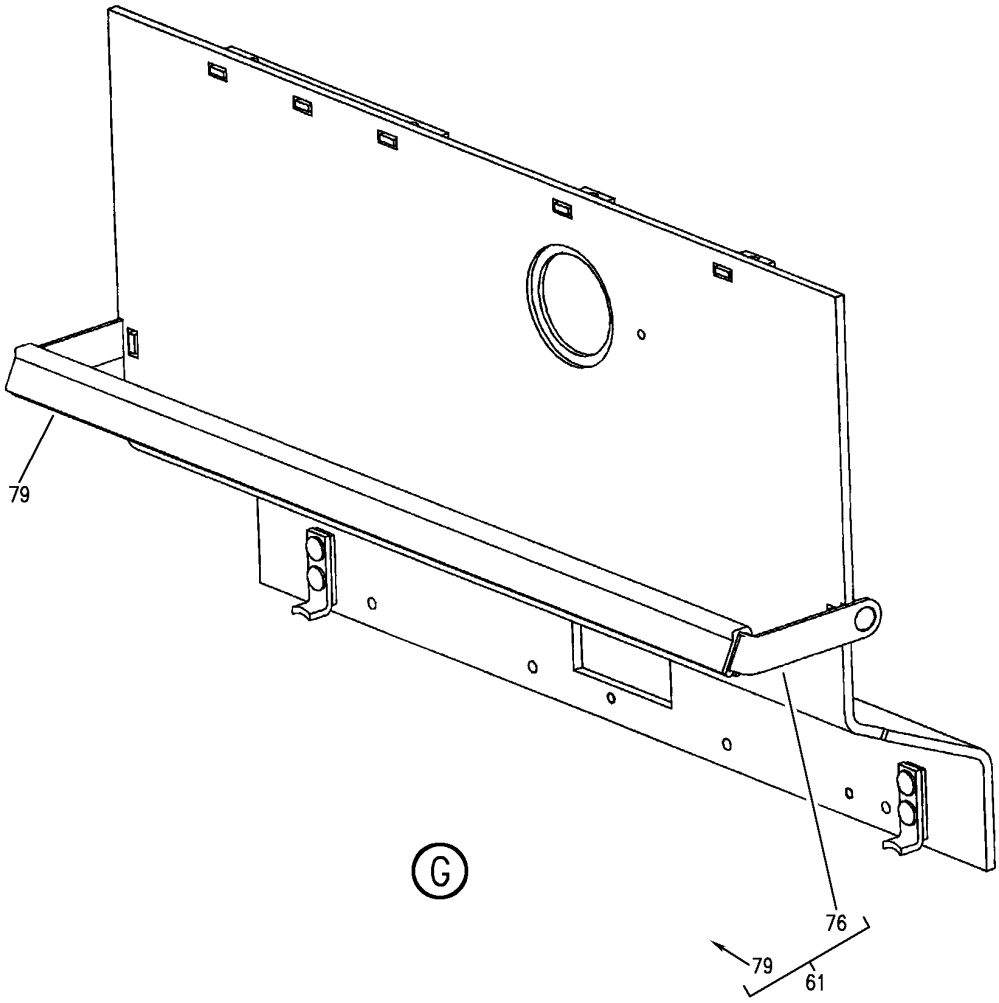

Y 31410201 SHT 4 REV 257

EQUIPMENT INSTL-MAIN ELECTRONICS EQPT CTR (EICAS COMPUTER ONLY)
FIGURE 1 (SHEET 4)

BOEING PROPRIETARY - Copyright © - Unpublished Work - See title page for details.

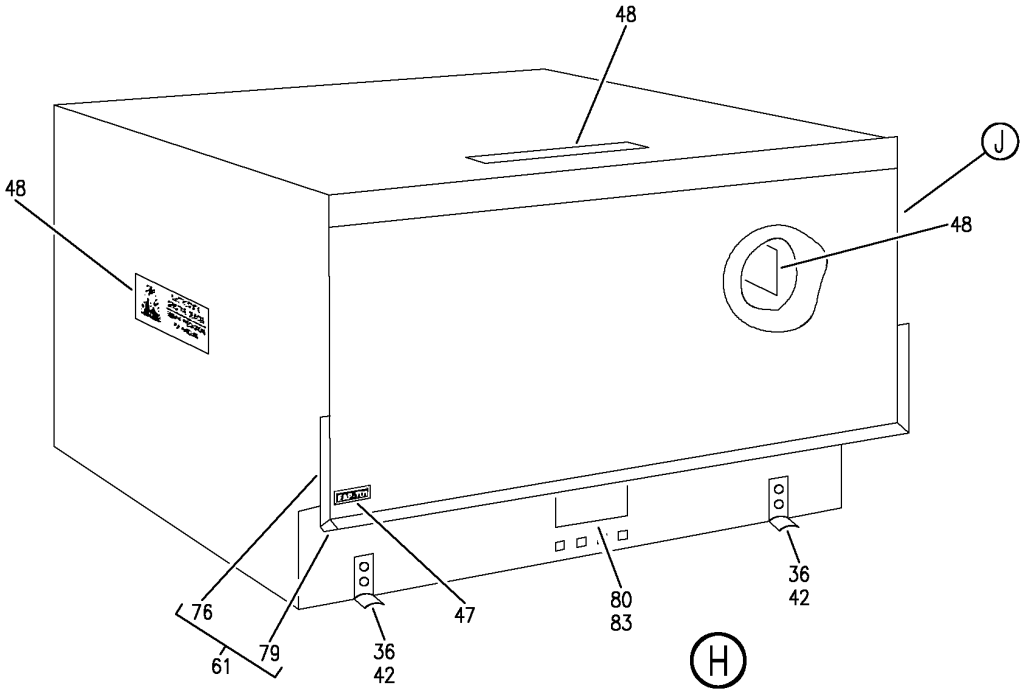

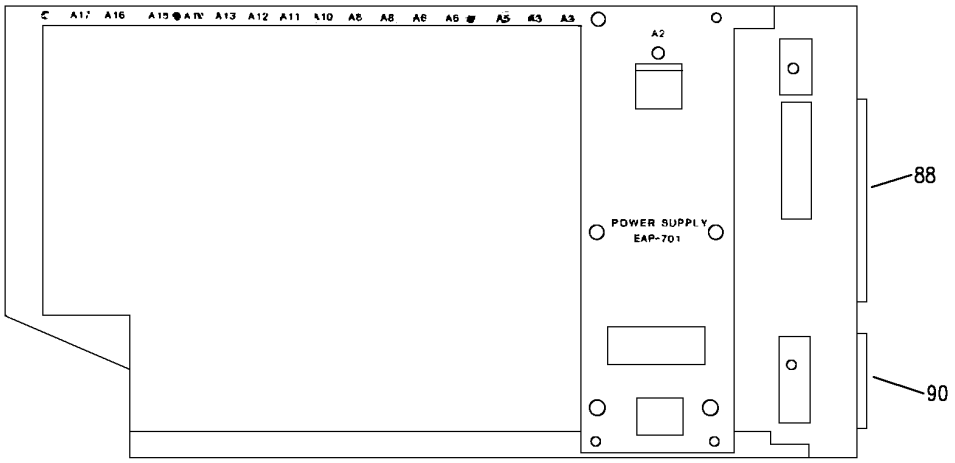

J

Y 31410201 SHT 5 REV 257

EQUIPMENT INSTL-MAIN ELECTRONICS EQPT CTR (EICAS COMPUTER ONLY)
FIGURE 1 (SHEET 5)

BOEING PROPRIETARY - Copyright © - Unpublished Work - See title page for details.

FIG ITEM	PART NUMBER	1 2 3 4 5 6 7 NOMENCLATURE	EFFECT FROM TO	UNITS PER ASSY
1		EQUIPMENT INSTL-MAIN ELECTRONICS EQPT CTR (EICAS COMPUTER ONLY)	002004 006100 107107 121503 904999	
- 2	284N1307-33	EQUIPMENT INSTL-MAIN ELECTRONICS EQPT CTR (EICAS COMPUTER ONLY) FOR NHA/OTHER SYS DET SEE: 24-00-58-01	107107	RF
- 2	284N1800-32	EQUIPMENT INSTL-MAIN ELECTRONICS EQPT CTR (EICAS COMPUTER ONLY) FOR NHA/OTHER SYS DET SEE: 24-00-58-01	952999	RF
- 4	284N1800-16	EQUIPMENT INSTL-MAIN ELECTRONICS EQPT CTR (EICAS COMPUTER ONLY) FOR NHA/OTHER SYS DET SEE: 24-00-58-01	121503 904949	RF
- 5	284N1800-34	EQUIPMENT INSTL-MAIN ELECTRONICS EQPT CTR (EICAS COMPUTER ONLY) FOR NHA/OTHER SYS DET SEE: 24-00-58-01	002004 006100	RF
- 5	284N1800-38	EQUIPMENT INSTL-MAIN ELECTRONICS EQPT CTR (EICAS COMPUTER ONLY)	950951	RF
- 15	3171C0LDE0-02	.SOFTWARE-EICAS OPS (CUSTOMER FURNISHED) SUPPLIER CODE: V4V792 SPECIFICATION NUMBER: S242N701-2002 MISCELLANEOUS DATA: DISKETTE QTY: 1 DISK USED WITH: 822-1033-100 HARDWARE REFERENCE SEE: 31-41-02-01 FOR SPARES PROCURE: 831-4565-101 V4V792 POST SERVICE BULLETIN: 31-0069 POST SERVICE BULLETIN: EICAS-31-1 V4V792	952952	1

MISSING ITEM NUMBERS NOT APPLICABLE

- ITEM NOT ILLUSTRATED

BOEING PROPRIETARY - Copyright © - Unpublished Work - See title page for details.

FIG ITEM	PART NUMBER	1 2 3 4 5 6 7 NOMENCLATURE	EFFECT FROM TO	UNITS PER ASSY
1				
- 15	3170C0LDE0-03	.SOFTWARE-EICAS OPS (CUSTOMER FURNISHED) SUPPLIER CODE: V4V792 MISCELLANEOUS DATA: DISKETTE QTY: 1 DISK USED WITH: 822-1033-100 HARDWARE REFERENCE SEE: 31-41-02-01 FOR SPARES PROCURE: 831-4565-102 V4V792 POST SERVICE BULLETIN: 31-0078 POST SERVICE BULLETIN: EICAS-31-2 V4V792	107107 121503 952999	1
- 15	3172C0LDE0-01	.SOFTWARE-EICAS OPS SUPPLIER CODE: V13499 MISCELLANEOUS DATA: DISKETTE QUANTITY: 1 DISK USED WITH: 822-1033-100 POST SERVICE BULLETIN: 31-0059 31-0059R1 PRE SERVICE BULLETIN: 31-0069 31-0078 31-0097 PRE SERVICE BULLETIN: EICAS-31-1 V4V792 EICAS-31-2 V4V792	002004 006100 121503 904949 952952	1

MISSING ITEM NUMBERS NOT APPLICABLE

- ITEM NOT ILLUSTRATED

BOEING PROPRIETARY - Copyright © - Unpublished Work - See title page for details.

	FIG ITEM	PART NUMBER	1 2 3 4 5 6 7 NOMENCLATURE	EFFECT FROM TO	UNITS PER ASSY
	1				
	- 15	3177C0LDE0-04	.SOFTWARE-OPS SUPPLIER CODE: V4V792 MISCELLANEOUS DATA: DISKETTE:1 DISK USED WITH: 822-1033-100 FOR SPARES PROCURE: 831-4565-103 V4V792 PRE SERVICE BULLETIN: 31-0104	002004 006100 904949	1
	- 15	3176C0LDE0-05	.SOFTWARE-OPS SUPPLIER CODE: V4V792 MISCELLANEOUS DATA: DISKETTE: 1 DISK USED WITH: 822-1033-100 FOR SPARES PROCURE: 831-4565-104 V13499 POST SERVICE BULLETIN: 31-0104 PRE SERVICE BULLETIN: 31-0159 POST SERVICE BULLETIN: EICAS-31-4 V4V792	002004 006100 904949	1
	- 16	3175BCG00M42	.SOFTWARE-EICAS OPC MISCELLANEOUS DATA: DISCKETTE QTY: 1 DISK USED WITH: 822-1033-100 FOR SPARES PROCURE: 242N7010-2162 POST SERVICE BULLETIN: 31-0059	952952	RF
R R R R R R R R R R R	- 16	310EBCG013M5	.SOFTWARE-EICAS OPC MISCELLANEOUS DATA: DISKETTE QTY: I DISK USED WITH: 822-1033-100 HARDWARE REFERENCE SEE: 31-41-02-01 FOR SPARES PROCURE: 242N7010-3265 POST SERVICE BULLETIN: 34-0404R2	015015	1

MISSING ITEM NUMBERS NOT APPLICABLE

- ITEM NOT ILLUSTRATED

BOEING PROPRIETARY - Copyright © - Unpublished Work - See title page for details.

	FIG ITEM	PART NUMBER	1 2 3 4 5 6 7 NOMENCLATURE	EFFECT FROM TO	UNITS PER ASSY
	1				
R	- 18	3104BCG00M85	.SOFTWARE-EICAS OPC	015015	1
R			USED WITH:		
R			822-1033-100		
R			HARDWARE REFERENCE SEE:		
R			31-41-02-01		
R			FOR SPARES PROCURE:		
R			242N7010-2175		
R			POST SERVICE BULLETIN:		
R			31-0173R2		
R	- 18	3100BCG013N8	.SOFTWARE-EICAS OPC	009009	1
R			MISCELLANEOUS DATA:		
R			DISKETTE QTY: 1 DISK		
R			USED WITH:		
R			822-1033-100		
R			FOR SPARES PROCURE:		
R			242N7010-3278		
R			POST SERVICE BULLETIN:		
R			31-0184R1		
	- 19	3109BCG013N1	.SOFTWARE-EICAS OPC	107107	1
			MISCELLANEOUS DATA:		
			DISKETTE QTY: 1 DISK		
			USED WITH:		
			822-1033-100		
			FOR SPARES PROCURE:		
			242N7010-3271		
			POST SERVICE BULLETIN:		
			31-0174		
	- 19	3111BCG013T3	.SOFTWARE-EICAS OPC	009009	1
			MISCELLANEOUS DATA:		
			DISKETTE QTY: 1 DISK		
			USED WITH:		
			822-1033-100		
			FOR SPARES PROCURE:		
			242N7010-3293		
			POST SERVICE BULLETIN:		
			34-0404R1		
			PRE SERVICE BULLETIN:		
			31-0173R1		
			31-0184		

MISSING ITEM NUMBERS NOT APPLICABLE

- ITEM NOT ILLUSTRATED

BOEING PROPRIETARY - Copyright © - Unpublished Work - See title page for details.

	FIG ITEM	PART NUMBER	1 2 3 4 5 6 7 NOMENCLATURE	EFFECT FROM TO	UNITS PER ASSY
	1				
	- 19	311DBCG013R9	.SOFTWARE-EICAS OPC MISCELLANEOUS DATA: DISKETTE QTY: 1 DISK USED WITH: 822-1033-100 FOR SPARES PROCURE: 242N7010-3289 POST SERVICE BULLETIN: 31-0173R1 PRE SERVICE BULLETIN: 31-0184	009009	1
R	- 19	3117BCG013T5	.SOFTWARE-EICAS OPC MISCELLANEOUS DATA: DISKETTE QTY: 1 DISK USED WITH: 822-1033-100 FOR SPARES PROCURE: 242N7010-3295 POST SERVICE BULLETIN: 31-0184 PRE SERVICE BULLETIN: 31-0184R1	009009	1
	- 22	317EBCG013-19	.SOFTWARE-EICAS OPC MISCELLANEOUS DATA: DISKETTE QTY: 1 DISK USED WITH: 822-1033-100 FOR SPARES PROCURE: 242N7010-2249 POST SERVICE BULLETIN: 31-0127	950951	1
	- 22	317FBCG00658	.SOFTWARE-EICAS OPC MISCELLANEOUS DATA: DISKETTE:1 DISK USED WITH: 822-1033-100 FOR SPARES PROCURE: 242N7010-2058 POST SERVICE BULLETIN: 31-0059R1 PRE SERVICE BULLETIN: 34-0404 31-0173 31-0174	107107	1

MISSING ITEM NUMBERS NOT APPLICABLE

- ITEM NOT ILLUSTRATED

BOEING PROPRIETARY - Copyright © - Unpublished Work - See title page for details.

	FIG ITEM	PART NUMBER	1 2 3 4 5 6 7 NOMENCLATURE	EFFECT FROM TO	UNITS PER ASSY
	1				
	- 24	3115BCG006W0	.SOFTWARE-EICAS OPC MISCELLANEOUS DATA: DISKETTE QTY: 1 DISK USED WITH: 822-1033-100 FOR SPARES PROCURE: 242N7010-2130 POST SERVICE BULLETIN: 28-0116	904949	1
R R R R R R R R R R R R	- 25	317FBCG00649	.SOFTWARE-EICAS OPC MISCELLANEOUS DATA: DISKETTE:1 DISK USED WITH: 822-1033-100 FOR SPARES PROCURE: 242N7010-2049 POST SERVICE BULLETIN: 31-0059R3 PRE SERVICE BULLETIN: 34-0404R1 31-0173R1 31-0173R2	002004 006100	1
	- 27	317CBCG006-97	.SOFTWARE-EICAS OPC MISCELLANEOUS DATA: DISKETTE:1 DISK USED WITH: 822-1033-100 FOR SPARES PROCURE: 242N7010-2097 POST SERVICE BULLETIN: 31-0059	953999	1
	- 29	310BBCG013M0	.SOFTWARE-EICAS OPC MISCELLANEOUS DATA: DISKETTE QTY: 1 DISK USED WITH: 822-1033-100 FOR SPARES PROCURE: 242N7010-3260 POST SERVICE BULLETIN: 34-0404 PRE SERVICE BULLETIN: 31-0174	107107	1

MISSING ITEM NUMBERS NOT APPLICABLE

- ITEM NOT ILLUSTRATED

BOEING PROPRIETARY - Copyright © - Unpublished Work - See title page for details.

FIG ITEM	PART NUMBER	1 2 3 4 5 6 7 NOMENCLATURE	EFFECT FROM TO	UNITS PER ASSY
1				
- 29	3105BCG00M84	.SOFTWARE-EICAS OPC USED WITH: 822-1033-100 FOR SPARES PROCURE: 242N7010-2174 POST SERVICE BULLETIN: 31-0173 PRE SERVICE BULLETIN: 34-0404 31-0174	107107	1
30	822-1033-100	.COMPUTER ASSY-EICAS SUPPLIER CODE: V4V792 SPECIFICATION NUMBER: S242N701-1001 ELECTRICAL EQUIP NUMBER: M10181 M10182 COMPONENT MAINT MANUAL REF: 31-41-86 SOFTWARE DRAWING REF: 31-41-02-01 POST SERVICE BULLETIN: 31-0059	952952	2
30	822-1033-100	.COMPUTER ASSY-EICAS SUPPLIER CODE: V4V792 SPECIFICATION NUMBER: S242N701-1001 ELECTRICAL EQUIP NUMBER: M10181 M10182 COMPONENT MAINT MANUAL REF: 31-41-86 SOFTWARE DRAWING REF: 31-41-02-01 POST SERVICE BULLETIN: 31-0059 31-0059R3 POST SERVICE BULLETIN: EAP-701C-31-AP V4V792 EAP-701-31-AL V4V792 REWORKED BY SB: EAP-703-31-1 V4V792	002004 006100 107107 121503 904951 953999	2

MISSING ITEM NUMBERS NOT APPLICABLE

- ITEM NOT ILLUSTRATED

BOEING PROPRIETARY - Copyright © - Unpublished Work - See title page for details.

FIG ITEM	PART NUMBER	1 2 3 4 5 6 7 NOMENCLATURE	EFFECT FROM TO	UNITS PER ASSY
1				
30	622-5348-107	.COMPUTER ASSY-EICAS SUPPLIER CODE: V4V792 SPECIFICATION NUMBER: S242N701-109 ELECTRICAL EQUIP NUMBER: M10181 M10182 COMPONENT MAINT MANUAL REF: 31-41-83 QUALIFIED I/W DATA: 622-5348-106 I/W AND INTERMIXABLE WITH 622-5348-107 EXCEPT AIRCRAFT POWERED WITH RB211-535E4B ENGINES REQUIRE 622-5348-107 I/W 1 PAIRS, PARTS ARE NOT INTERMIXABLE PRE SERVICE BULLETIN: 31-0059 PRE SERVICE BULLETIN: EAP-701-31-AL V4V792	002004 006100 121503	2
30	622-5348-108	.COMPUTER ASSY-EICAS SUPPLIER CODE: V4V792 SPECIFICATION NUMBER: S242N701-110 ELECTRICAL EQUIP NUMBER: M10181 M10182 COMPONENT MAINT MANUAL REF: 31-41-83 QUALIFIED I/W DATA: I/W 1 PAIRS, PARTS ARE NOT INTERMIXABLE PRE SERVICE BULLETIN: 31-0059 PRE SERVICE BULLETIN: EAP-701-31-AA V4V792 EAP-701-31-AL V4V792	002004 006006 952952	2

MISSING ITEM NUMBERS NOT APPLICABLE

– ITEM NOT ILLUSTRATED

BOEING PROPRIETARY - Copyright © - Unpublished Work - See title page for details.

FIG ITEM	PART NUMBER	1 2 3 4 5 6 7 NOMENCLATURE	EFFECT FROM TO	UNITS PER ASSY
1				
30	622-5348-109	.COMPUTER ASSY-EICAS	002004	2
		SUPPLIER CODE:	006100	
		V4V792	121503	
		SPECIFICATION NUMBER:	952952	
		S242N701-111		
		ELECTRICAL EQUIP NUMBER:		
		M10181		
		M10182		
		COMPONENT MAINT MANUAL REF:		
		31-41-83		
		QUALIFIED I/W DATA:		
		I/W 1 PAIRS, PARTS ARE		
		NOT INTERMIXABLE		
		PRE SERVICE BULLETIN:		
		31-0059		
43	829-0251-001	..PLATE-IDENTIFICATION	002004	1
		SUPPLIER CODE:	006100	
		V4V792	107107	
		USED ON:	904999	
		822-1033-100		
46	830-6625-001	..STRIP-IDENTIFICATION	002004	1
		SUPPLIER CODE:	006100	
		V4V792	107107	
		USED ON:	904999	
		822-1033-100		
49	280-2745-140	..LABEL-ESDS WARNING	002004	3
		SUPPLIER CODE:	006100	
		V12998	107107	
		USED ON:	904999	
		822-1033-100		
52	211600-2	..CAP-DUST	002004	2
		SUPPLIER CODE:	006100	
		V00779	107107	
		USED ON:	904999	
		822-1033-100		
55	MS27511F18C	..COVER-CONNECTOR	002004	1
		USED ON:	006100	
		822-1033-100	107107	
			904999	
		ATTACHING PARTS		
- 58	MS51957-12B	..SCREW-CONNECTOR	002004	1
			006100	
			107107	
			904999	
		-------*-------		
61	651-2408-010	..HANDLE ASSY-	107107	1
		SUPPLIER CODE:	950999	
		V4V792		

MISSING ITEM NUMBERS NOT APPLICABLE

- ITEM NOT ILLUSTRATED

BOEING PROPRIETARY - Copyright © - Unpublished Work - See title page for details.

FIG ITEM	PART NUMBER	1 2 3 4 5 6 7 NOMENCLATURE	EFFECT FROM TO	UNITS PER ASSY
1				
		ATTACHING PARTS		
- 64	652-5421-001	..SCREW-	107107	2
		SUPPLIER CODE:	950999	
		V4V792		
- 67	768-3178-001	..WASHER-	107107	4
		SUPPLIER CODE:	950999	
		V4V792		
- 70	310-0007-050	..WASHER-	107107	2
		SUPPLIER CODE:	950999	
		V78189		
- 73	MS21042-06	..NUT	107107	2
			950999	
		-------*-------		
76	768-3387-024	...STRAP-	107107	1
		SUPPLIER CODE:	950999	
		V4V792		
79	768-3386-009	...BAR-GRIP	107107	1
		SUPPLIER CODE:	950999	
		V4V792		
80	646-0090-005	..PLATE-IDENT	002004	1
		SUPPLIER CODE:	006006	
		V4V792	904949	
		USED ON:	952952	
		622-5348-108		
88	025-1157-001	..CAP-	002004	2
		SUPPLIER CODE:	006006	
		V71468	904949	
		CONFIG CHG DATA FROM A CMM:	952952	
		SUPSD BY 211600-2		
		OPTIONAL PART:		
		4041437-5		
		V58960		
		USED ON:		
		622-5348-108		
90	025-1158-001	..CAP-	002004	2
		SUPPLIER CODE:	006006	
		V71468	904949	
		CONFIG CHG DATA FROM A CMM:	952952	
		SUPSD BY 211600-2		
		OPTIONAL PART:		
		4041437-6		
		V58960		
		USED ON:		
		622-5348-108		

MISSING ITEM NUMBERS NOT APPLICABLE

- ITEM NOT ILLUSTRATED

BOEING PROPRIETARY - Copyright © - Unpublished Work - See title page for details.

FIG ITEM	PART NUMBER	1 2 3 4 5 6 7 NOMENCLATURE	EFFECT FROM TO	UNITS PER ASSY
1				
90	211600-2	..CAP-DUST SUPPLIER CODE: V00779 CONFIG CHG DATA FROM A CMM: SUPERCEDES 025-1157-001, 025-1158-001 USED ON: 622-5348-108	002004 006006 904949 952952	2
- 200	286N1275-002	WIRE BUNDLE ASSY- REWORKED BY SB: 31-0059 REWORKED BY ALERT SB: 34A0222	107107	RF
- 200	286N1275-004	WIRE BUNDLE ASSY- REWORKED BY SB: 31-0059 REWORKED BY ALERT SB: 34A0222	121503 904949	RF
- 200	286N1275-011	WIRE BUNDLE ASSY- REWORKED BY SB: 31-0059 34-0200 REWORKED BY ALERT SB: 34A0222	002004 006100 950999	RF
225	BACC66K33C5601	.CONNECTOR- ELECTRICAL EQUIP NUMBER: D00319 D00321 WIRING DIAGRAM REF: 314111 314121 REWORKED BY SB: 31-0127R2 31-0059 REWORKED BY ALERT SB: 34A0222	002004 006100 107107 121503 904999	2

MISSING ITEM NUMBERS NOT APPLICABLE

– ITEM NOT ILLUSTRATED

BOEING PROPRIETARY - Copyright © - Unpublished Work - See title page for details.

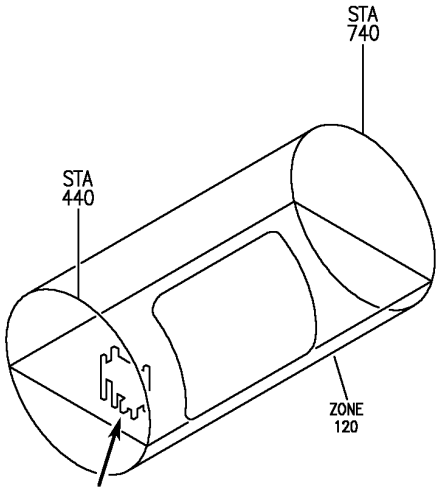

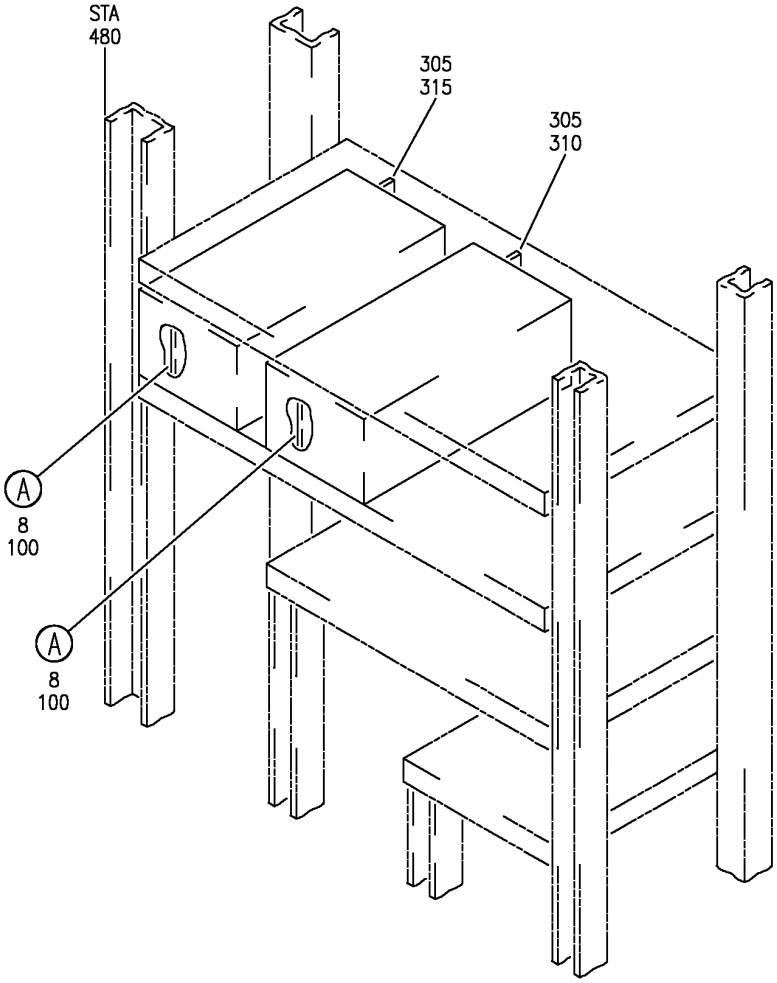

Y 31410201B SHT 1 REV 264

EQUIPMENT AND SOFTWARE INSTL-MAIN ELECTRONICS EQPT CTR (EICAS COMPUTER ONLY)
FIGURE 1B (SHEET 1)

BOEING PROPRIETARY - Copyright © - Unpublished Work - See title page for details.

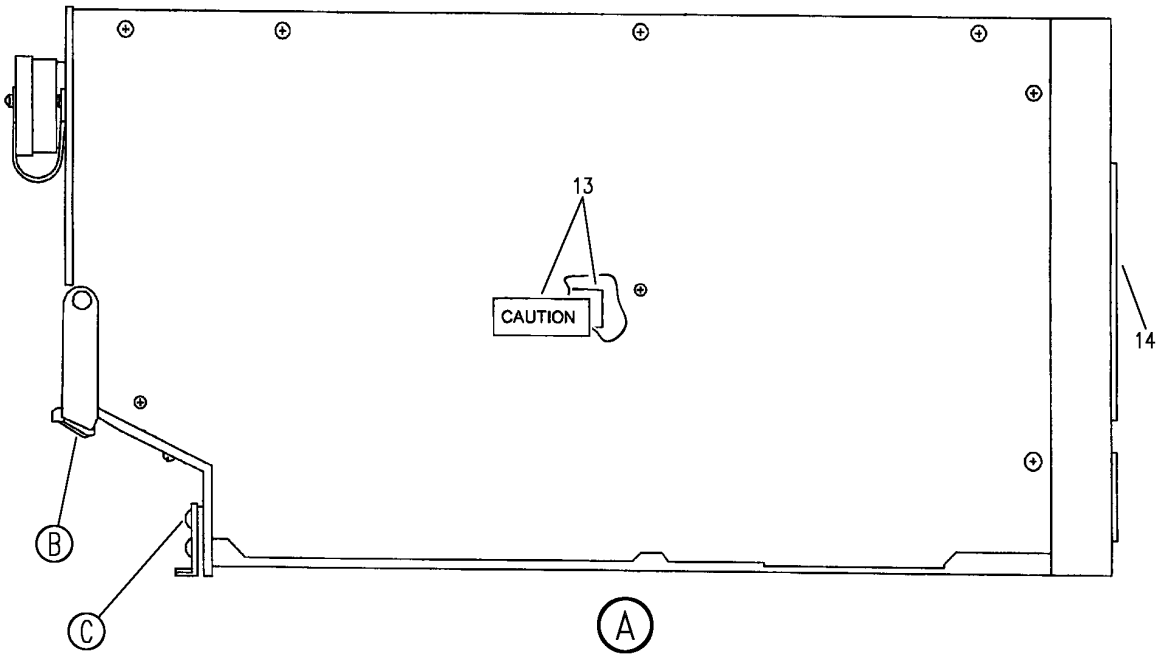

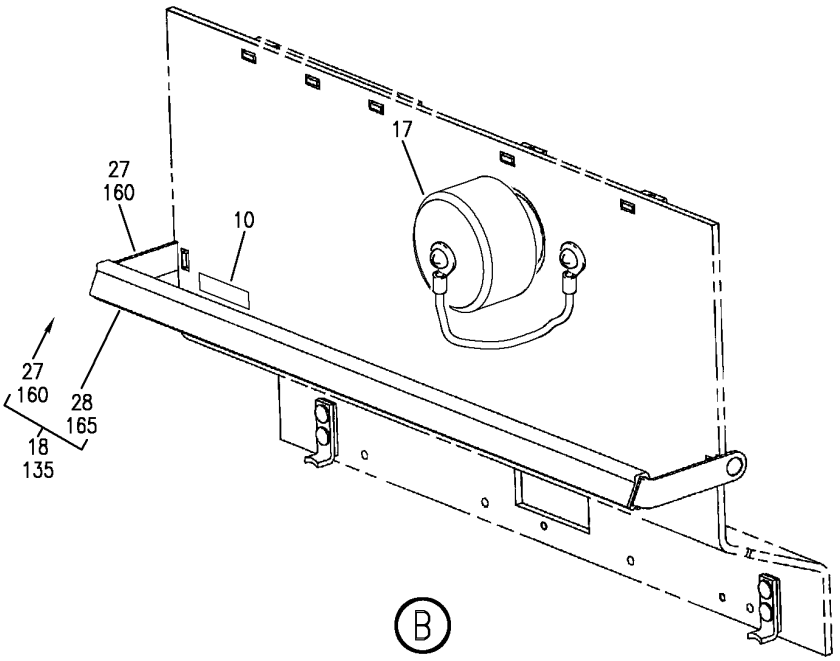

Y 31410201B SHT 2 REV 259

EQUIPMENT AND SOFTWARE INSTL-MAIN ELECTRONICS EQPT CTR (EICAS COMPUTER ONLY)
FIGURE 1B (SHEET 2)

BOEING PROPRIETARY - Copyright © - Unpublished Work - See title page for details.

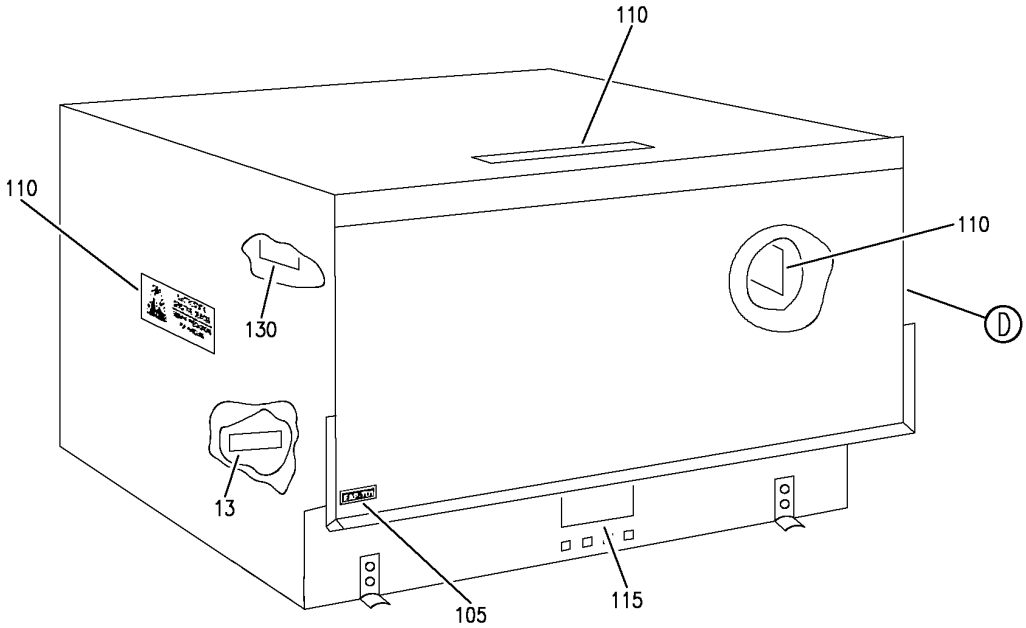

C

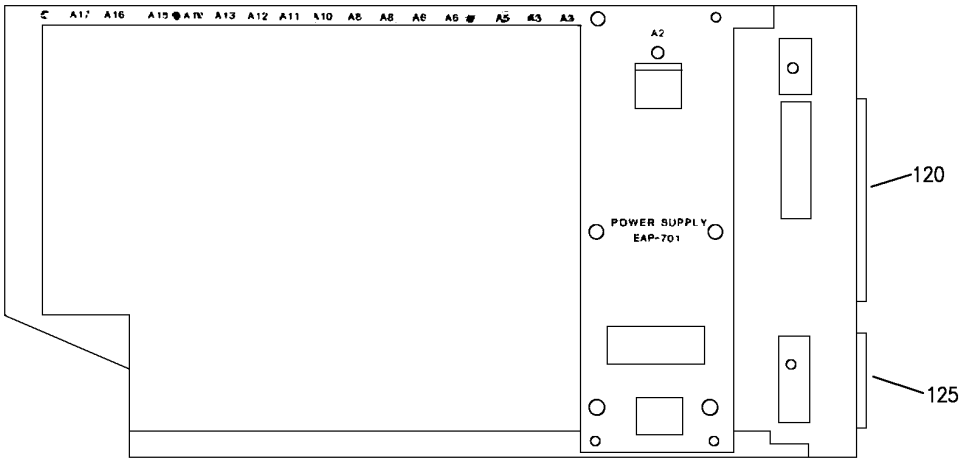

D

Y 31410201B SHT 3 REV 259

EQUIPMENT AND SOFTWARE INSTL-MAIN ELECTRONICS EQPT CTR (EICAS COMPUTER ONLY)
FIGURE 1B (SHEET 3)

BOEING PROPRIETARY - Copyright © - Unpublished Work - See title page for details.

FIG ITEM	PART NUMBER	1 2 3 4 5 6 7 NOMENCLATURE	EFFECT FROM TO	UNITS PER ASSY
1B				
		EQUIPMENT AND SOFTWARE	101102	
		INSTL-MAIN ELECTRONICS		
		EQPT CTR		
		(EICAS COMPUTER ONLY)		
- 2	284N1800-140	EQUIPMENT INSTL-MAIN	101101	RF
		ELECTRONICS EQPT CTR		
		(EICAS COMPUTER ONLY)		
		FOR NHA/OTHER SYS DET SEE:		
		24-00-58-05E		
- 3	284N1800-141	EQUIPMENT INSTL-MAIN	102102	RF
		ELECTRONICS EQPT CTR		
		(EICAS COMPUTER ONLY)		
		FOR NHA/OTHER SYS DET SEE:		
		24-00-58-05E		
8	822-1033-100	.COMPUTER ASSY-EICAS	101102	2
		SUPPLIER CODE:		
		V4V792		
		SPECIFICATION NUMBER:		
		S242N701-1001		
		ELECTRICAL EQUIP NUMBER:		
		M10181		
		M10182		
		COMPONENT MAINT MANUAL REF:		
		31-41-86		
		SOFTWARE DRAWING REF:		
		31-41-02-01B		
10	830-6625-001	..STRIP-IDENTIFICATION	101102	1
		SUPPLIER CODE:		
		V4V792		
13	280-2745-140	..LABEL-ESDS WARNING	101102	3
		SUPPLIER CODE:		
		V12998		
14	211600-2	..CAP-DUST	101102	2
		SUPPLIER CODE:		
		V00779		
- 15	838-7009-150	..TAG-	101102	1
		SUPPLIER CODE:		
		V4V792		
17	MS27511F18C	..COVER-CONNECTOR	101102	1
18	651-2408-010	..HANDLE ASSY-	101102	1
		SUPPLIER CODE:		
		V4V792		
		ATTACHING PARTS		
- 20	652-5421-001	..SCREW-	101102	2
		SUPPLIER CODE:		
		V4V792		
- 22	768-3178-001	..WASHER-	101102	4
		SUPPLIER CODE:		
		V4V792		

MISSING ITEM NUMBERS NOT APPLICABLE

- ITEM NOT ILLUSTRATED

BOEING PROPRIETARY - Copyright © - Unpublished Work - See title page for details.

FIG ITEM	PART NUMBER	1 2 3 4 5 6 7 NOMENCLATURE	EFFECT FROM TO	UNITS PER ASSY
1B				
- 23	310-0007-050	..WASHER- SUPPLIER CODE: V78189	101102	2
- 25	MS21042-06	..NUT -------*-------	101102	2
27	768-3387-024	...STRAP- SUPPLIER CODE: V4V792	101102	1
28	768-3386-009	...BAR-GRIP SUPPLIER CODE: V4V792	101102	1
- 301	286N1275-393	WIRE BUNDLE ASSY	101101	RF
- 302	286N1275-397	WIRE BUNDLE ASSY	102102	RF
305	BCREF15547	.CONNECTOR- OVERLENGTH PART NUMBER: BACC66K38C63AA01 ELECTRICAL EQUIP NUMBER: D00319 D00321 WIRING DIAGRAM REF: 314111 314122	101102	2
- 500	240N0002-230	SOFTWARE INSTL-EICAS OPC FOR NHA SEE: 25-10-00-22	101102	RF
- 505	3114BCG006W1	.SOFTWARE-EICAS OPC MISCELLANEOUS DATA: DISKETTE:1 DISK USED WITH: 822-1033-100 FOR SPARES PROCURE: 242N7010-2131	101102	2
- 550	242N7001-20	SOFTWARE INSTL-EICAS PRE-MODULE FOR NHA SEE: 25-10-00-20	101102	RF

MISSING ITEM NUMBERS NOT APPLICABLE

- ITEM NOT ILLUSTRATED

BOEING PROPRIETARY - Copyright © - Unpublished Work - See title page for details.

FIG ITEM	PART NUMBER	1 2 3 4 5 6 7 NOMENCLATURE	EFFECT FROM TO	UNITS PER ASSY
1B				
- 555	3171C0LDE0-02	.SOFTWARE-EICAS OPS SUPPLIER CODE: V4V792 SPECIFICATION NUMBER: S242N701-2002 MISCELLANEOUS DATA: DISKETTE QTY: 1 DISK USED WITH: 822-1033-100 FOR SPARES PROCURE: S242N701-2002 831-4565-101 V4V792 PRE SERVICE BULLETIN: 31-0097	101102	2
- 555	3177C0LDE0-04	.SOFTWARE-OPS SUPPLIER CODE: V4V792 MISCELLANEOUS DATA: DISKETTE:1 DISK USED WITH: 822-1033-100 FOR SPARES PROCURE: 831-4565-103 V4V792 POST SERVICE BULLETIN: 31-0097 PRE SERVICE BULLETIN: 31-0104 PRE SERVICE BULLETIN: EICAS-31-4 V4V792	101102	1
- 555	3177C0LDE0-05	.SOFTWARE-OPS SUPPLIER CODE: V4V792 MISCELLANEOUS DATA: DISKETTE: 1 DISK USED WITH: 822-1033-100 FOR SPARES PROCURE: 831-4565-104 V13499 POST SERVICE BULLETIN: 31-0104 POST SERVICE BULLETIN: EICAS-31-4 V4V792	101102	1

MISSING ITEM NUMBERS NOT APPLICABLE

- ITEM NOT ILLUSTRATED

BOEING PROPRIETARY - Copyright © - Unpublished Work - See title page for details.

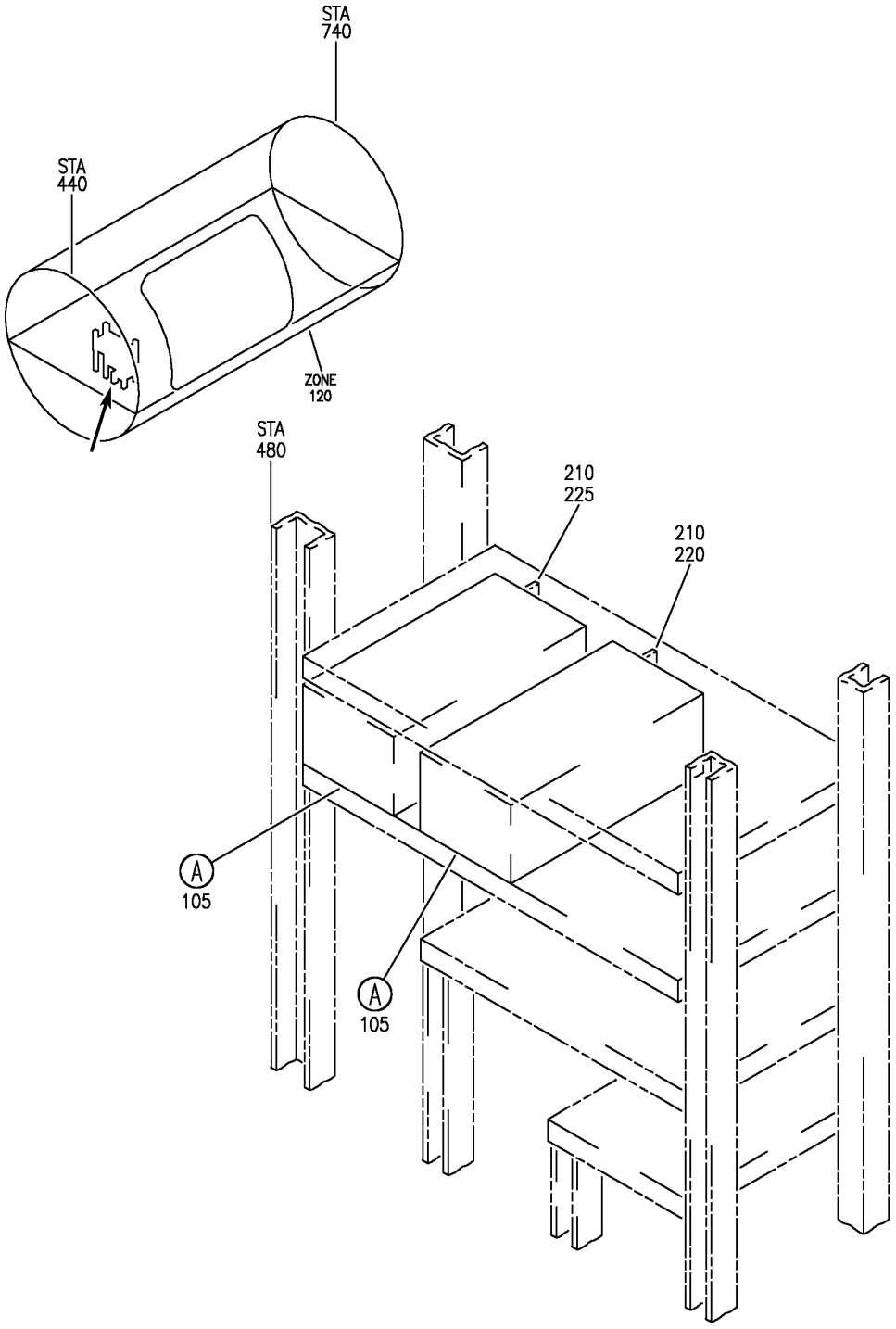

EQUIPMENT AND SOFTWARE INSTL-MAIN ELECTRONICS EQPT CTR (EICAS COMPUTER ONLY)
FIGURE 2 (SHEET 1)

BOEING PROPRIETARY - Copyright © - Unpublished Work - See title page for details.

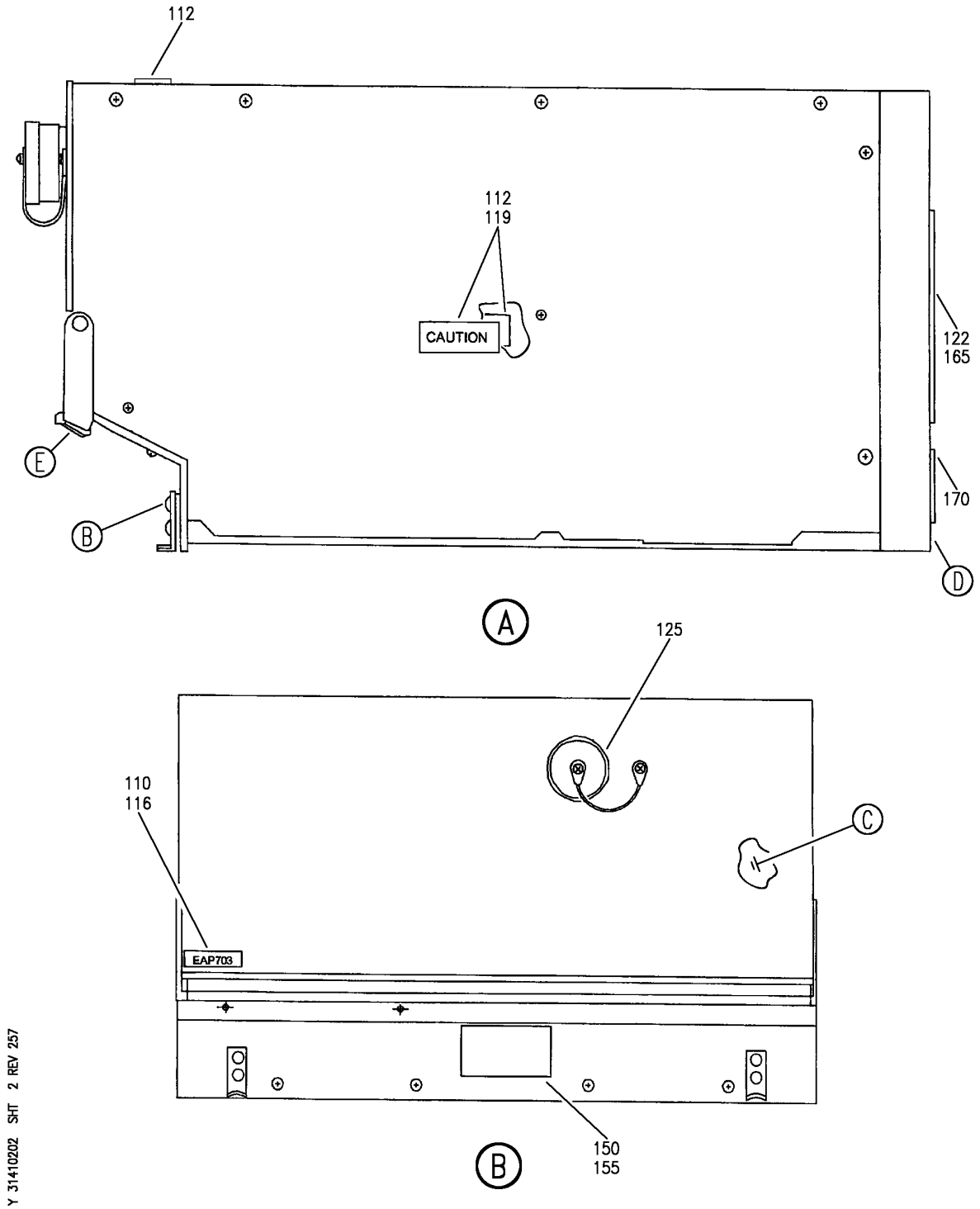

EQUIPMENT AND SOFTWARE INSTL-MAIN ELECTRONICS EQPT CTR (EICAS COMPUTER ONLY)
FIGURE 2 (SHEET 2)

BOEING PROPRIETARY - Copyright © - Unpublished Work - See title page for details.

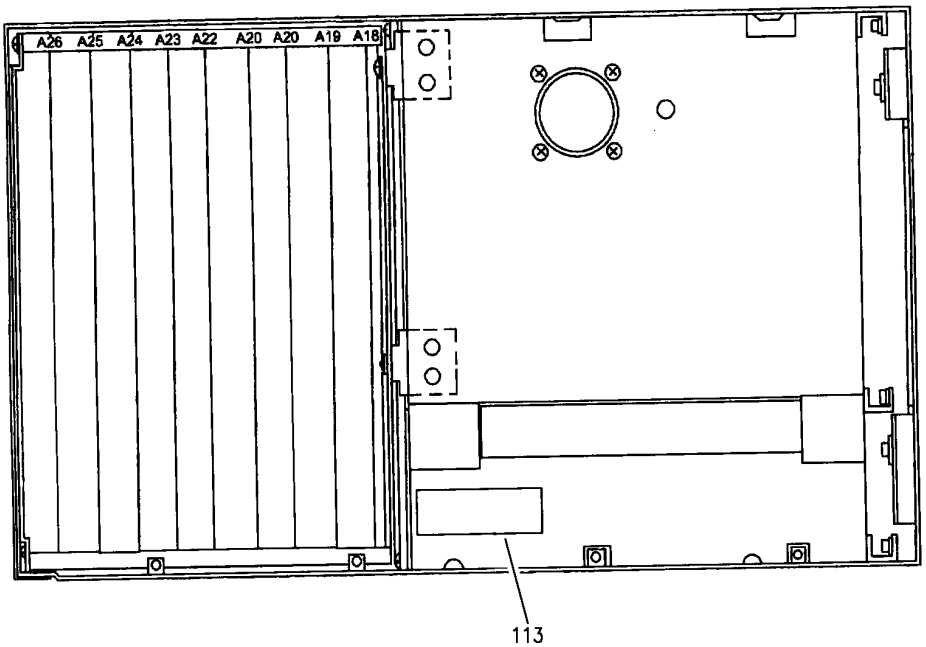

C

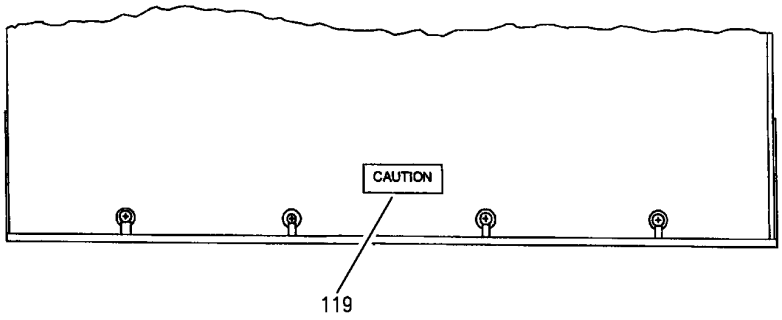

D

Y 31410202 SHT 3 REV 257

EQUIPMENT AND SOFTWARE INSTL-MAIN ELECTRONICS EQPT CTR (EICAS COMPUTER ONLY)
FIGURE 2 (SHEET 3)

BOEING PROPRIETARY - Copyright © - Unpublished Work - See title page for details.

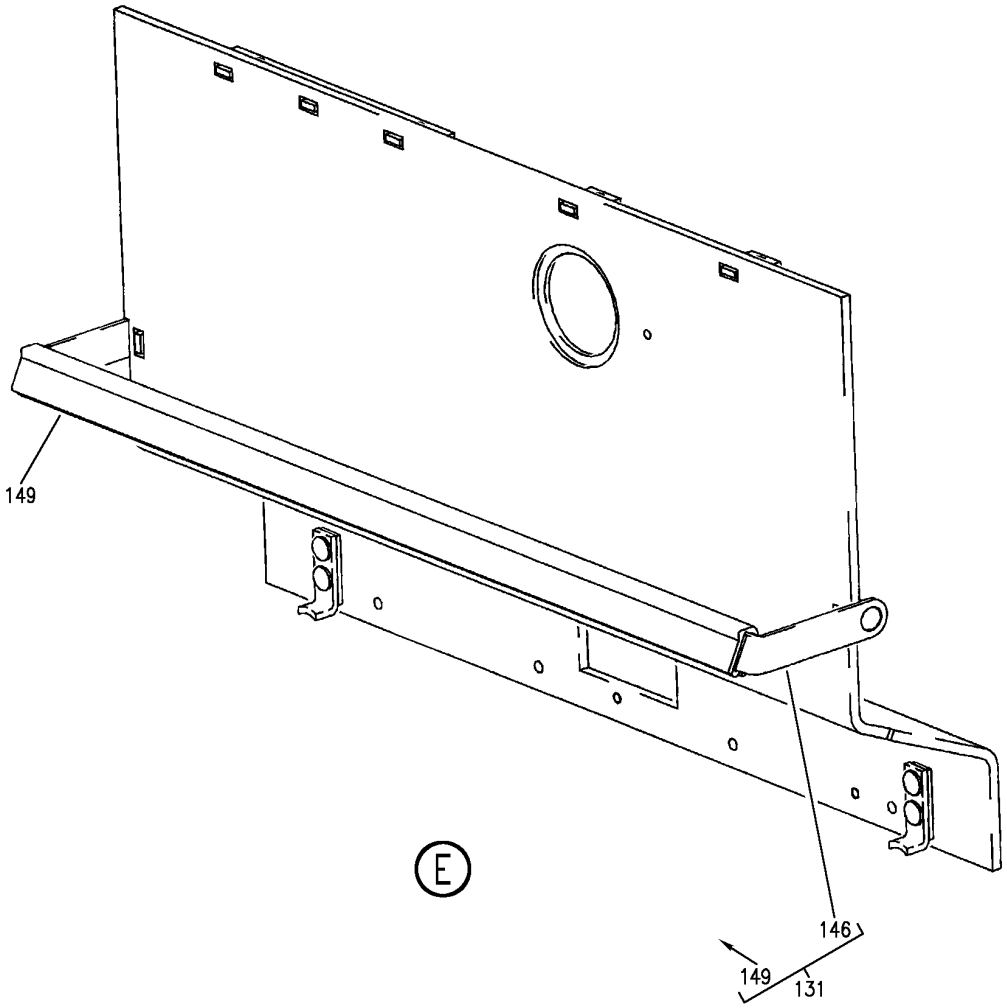

Y 31410202 SHT 4 REV 257

EQUIPMENT AND SOFTWARE INSTL-MAIN ELECTRONICS EQPT CTR (EICAS COMPUTER ONLY)
FIGURE 2 (SHEET 4)

BOEING PROPRIETARY - Copyright © - Unpublished Work - See title page for details.

FIG ITEM	PART NUMBER	1 2 3 4 5 6 7 NOMENCLATURE	EFFECT FROM TO	UNITS PER ASSY
2		EQUIPMENT AND SOFTWARE INSTL-MAIN ELECTRONICS EQPT CTR (EICAS COMPUTER ONLY)	504903	
- 100	284N1800-190	EQUIPMENT INSTL-MAIN ELECTRONICS EQPT CTR (EICAS COMPUTER ONLY) FOR NHA/OTHER SYS DET SEE: 24-00-58-05E	504504 506903	RF
- 101	284N1800-88	EQUIPMENT INSTL-MAIN ELECTRONICS EQPT CTR (EICAS COMPUTER ONLY) FOR NHA/OTHER SYS DET SEE: 24-00-58-05E	505505	RF
105	822-1033-100	.COMPUTER ASSY-EICAS SUPPLIER CODE: V4V792 SPECIFICATION NUMBER: S242N701-1001 ELECTRICAL EQUIP NUMBER: M10181 M10182 COMPONENT MAINT MANUAL REF: 31-41-86 SOFTWARE DRAWING REF: 31-41-02-02	504903	2
113	829-0251-001	..PLATE-IDENTIFICATION SUPPLIER CODE: V4V792	504903	1
116	830-6625-001	..STRIP-IDENTIFICATION SUPPLIER CODE: V4V792	504903	1
119	280-2745-140	..LABEL-ESDS WARNING SUPPLIER CODE: V12998	504903	3
122	211600-2	..CAP-DUST SUPPLIER CODE: V00779	504903	2
125	MS27511F18C	..COVER- ATTACHING PARTS	504903	1
- 128	MS51957-12B	..SCREW -------*-------	504903	1
131	651-2408-010	..HANDLE ASSY- SUPPLIER CODE: V4V792 ATTACHING PARTS	504903	1
- 134	652-542-001	..SCREW- SUPPLIER CODE: V4V792	504903	2

MISSING ITEM NUMBERS NOT APPLICABLE

- ITEM NOT ILLUSTRATED

BOEING PROPRIETARY - Copyright © - Unpublished Work - See title page for details.

FIG ITEM	PART NUMBER	1 2 3 4 5 6 7 NOMENCLATURE	EFFECT FROM TO	UNITS PER ASSY
2				
- 137	768-3178-001	..WASHER-	504903	4
		SUPPLIER CODE:		
		V4V792		
- 140	310-0007-050	..WASHER-	504903	2
		SUPPLIER CODE:		
		V78189		
- 143	MS21042-06	..NUT	504903	2
		-------*-------		
146	768-3387-024	...STRAP-	504903	1
		SUPPLIER CODE:		
		V4V792		
149	768-3386-009	...BAR-GRIP	504903	1
		SUPPLIER CODE:		
		V4V792		
- 203	286N1275-369	WIRE BUNDLE ASSY-E4-2 SHELF	504903	RF
210	BCREF15547	.CONNECTOR-	504903	2
		OVERLENGTH PART NUMBER:		
		BACC66K38C63AA01		
		ELECTRICAL EQUIP NUMBER:		
		D00319		
		D00321		
		WIRING DIAGRAM REF:		
		314111		
		314122		
- 500	240N0002-330	SOFTWARE INSTL-EICAS OPC	504506	RF
		FOR NHA SEE:		
		25-10-00-22		
- 501	240N0002-490	SOFTWARE INSTL-EICAS OPC	507903	RF
		FOR NHA SEE:		
		25-10-00-22		
- 505	311ABCG006Y1	.SOFTWARE-EICAS OPC	504504	2
		MISCELLANEOUS DATA:	506506	
		DISKETTE:1 DISK		
		USED WITH:		
		822-1033-100		
		FOR SPARES PROCURE:		
		242N7010-2141		
- 506	310EBCG00M43	.SOFTWARE-EICAS OPC	505903	2
		MISCELLANEOUS DATA:		
		DISKETTE QTY:1 DISK		
		USED WITH:		
		822-1033-100		
		FOR SPARES PROCURE:		
		242N7010-2163		
		POST SERVICE BULLETIN:		
		31-0124		

MISSING ITEM NUMBERS NOT APPLICABLE

- ITEM NOT ILLUSTRATED

BOEING PROPRIETARY - Copyright © - Unpublished Work - See title page for details.

FIG ITEM	PART NUMBER	1 2 3 4 5 6 7 NOMENCLATURE	EFFECT FROM TO	UNITS PER ASSY
2				
- 550	242N7001-20	SOFTWARE INSTL-EICAS PRE-MODULE FOR NHA SEE: 25-10-00-20	504903	RF
- 555	3171C0LDE002	.SOFTWARE-EICAS OPC SUPPLIER CODE: V81205 MISCELLANEOUS DATA: DISKETTE QTY: 1 DISK USED WITH: 822-1033-100 FOR SPARES PROCURE: S242N701-2002 831-4565-101 V4V792	504903	2

MISSING ITEM NUMBERS NOT APPLICABLE

- ITEM NOT ILLUSTRATED

BOEING PROPRIETARY - Copyright © - Unpublished Work - See title page for details.

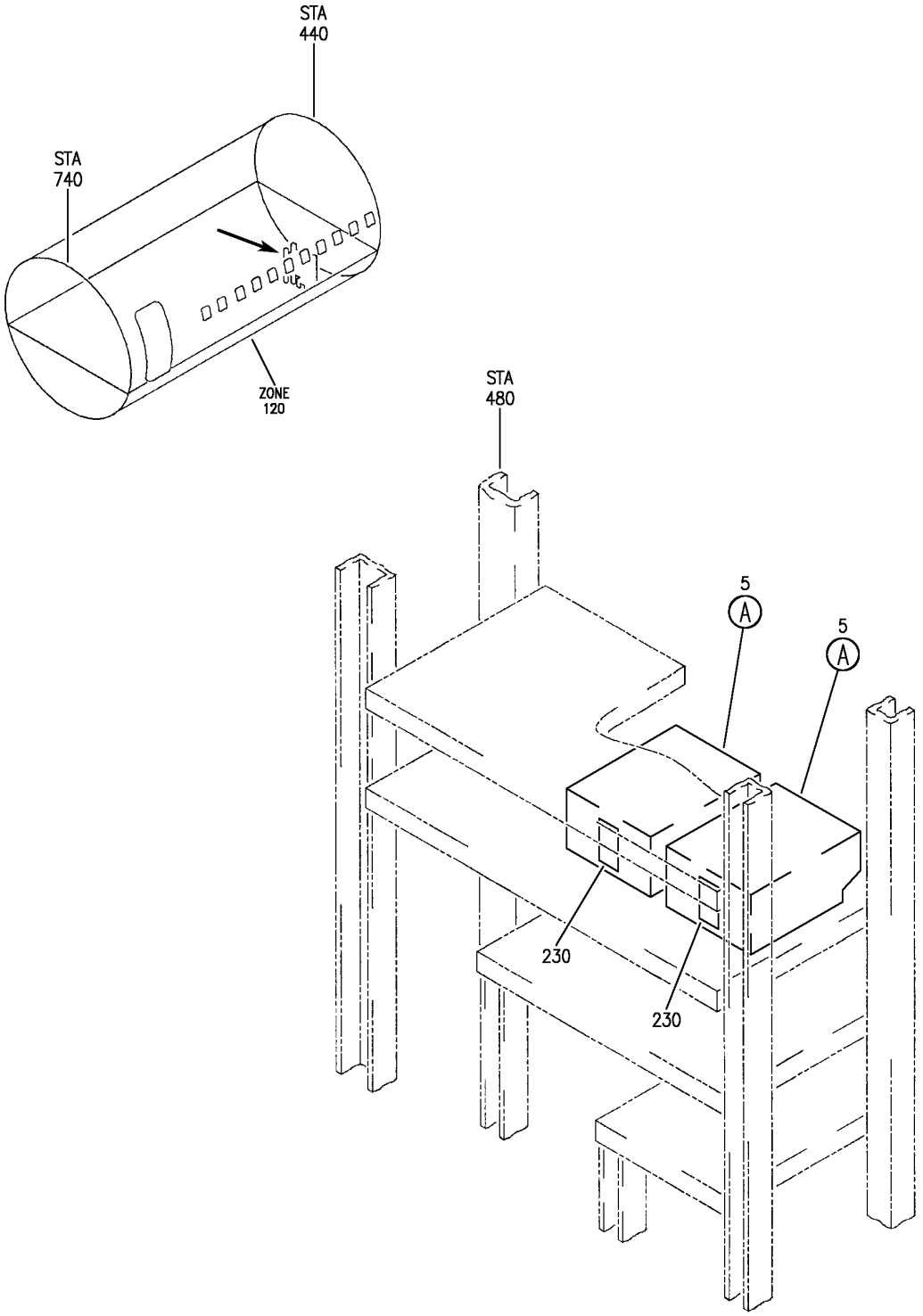

EQUIPMENT AND SOFTWARE INSTL- MAIN ELECTRONICS EQPT CTR ENG INDICATION AND CREW ALERTING SYS
FIGURE 8 (SHEET 1)

BOEING PROPRIETARY - Copyright © - Unpublished Work - See title page for details.

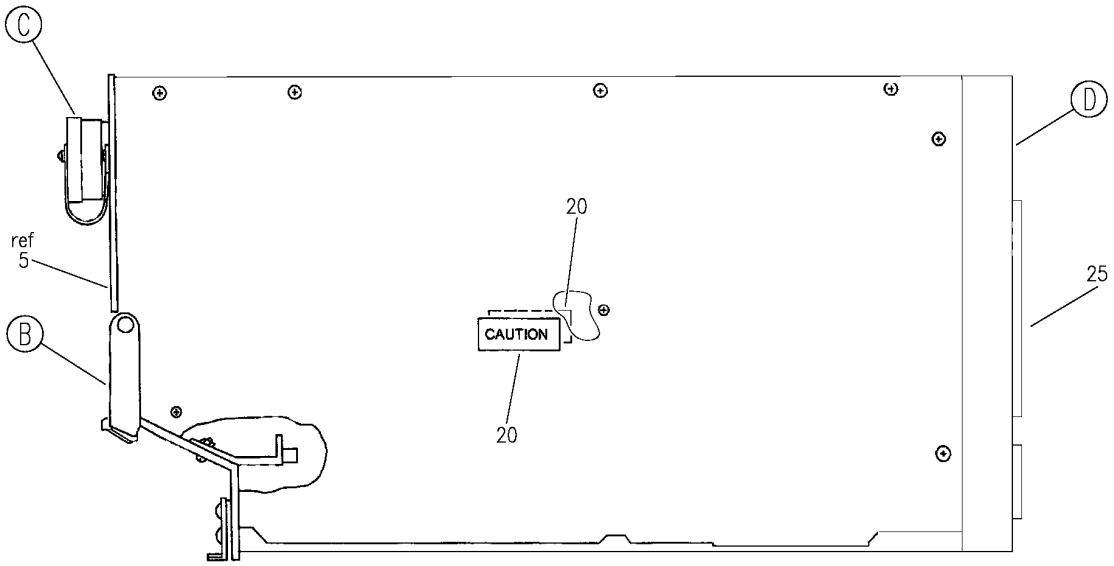

A

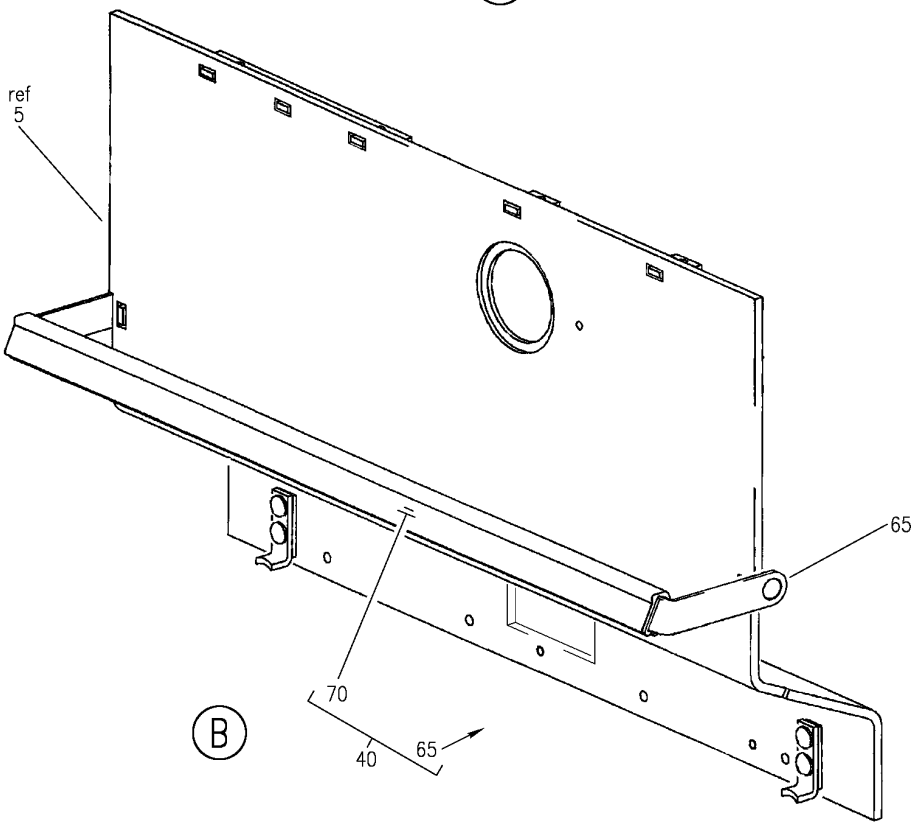

Y 31410208 SHT 2 REV 257

EQUIPMENT AND SOFTWARE INSTL- MAIN ELECTRONICS EQPT CTR ENG INDICATION AND CREW ALERTING SYS
FIGURE 8 (SHEET 2)

BOEING PROPRIETARY - Copyright © - Unpublished Work - See title page for details.

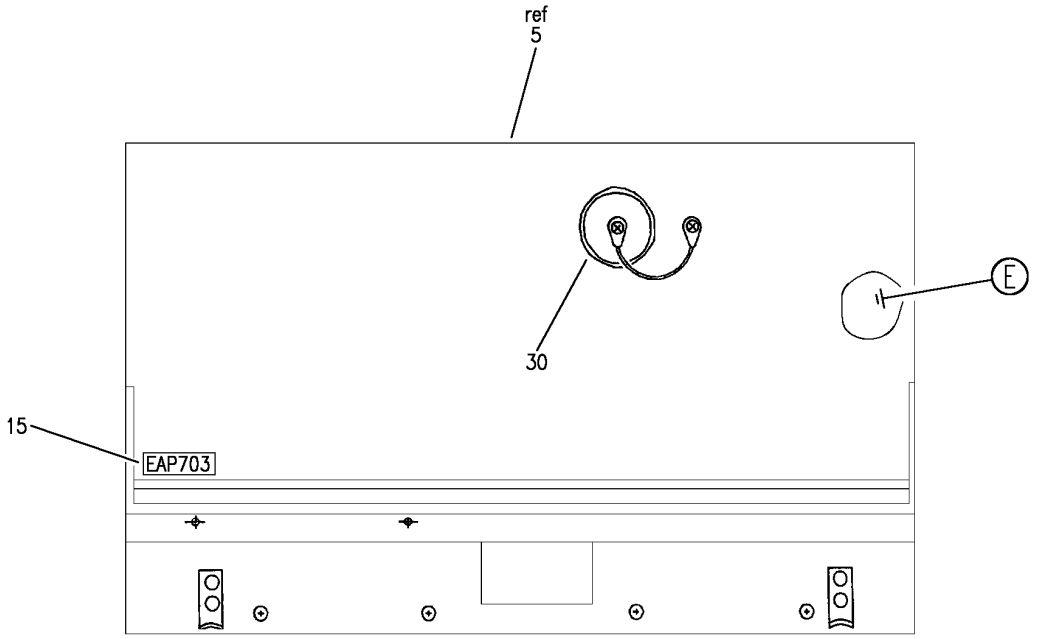

C

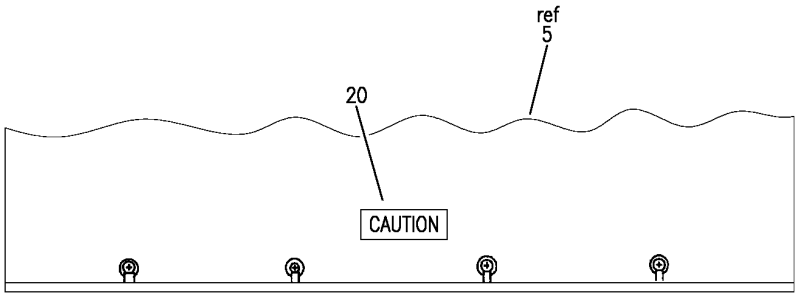

D

Y 31410208 SHT 3 REV 257

EQUIPMENT AND SOFTWARE INSTL- MAIN ELECTRONICS EQPT CTR ENG INDICATION AND CREW ALERTING SYS
FIGURE 8 (SHEET 3)

BOEING PROPRIETARY - Copyright © - Unpublished Work - See title page for details.

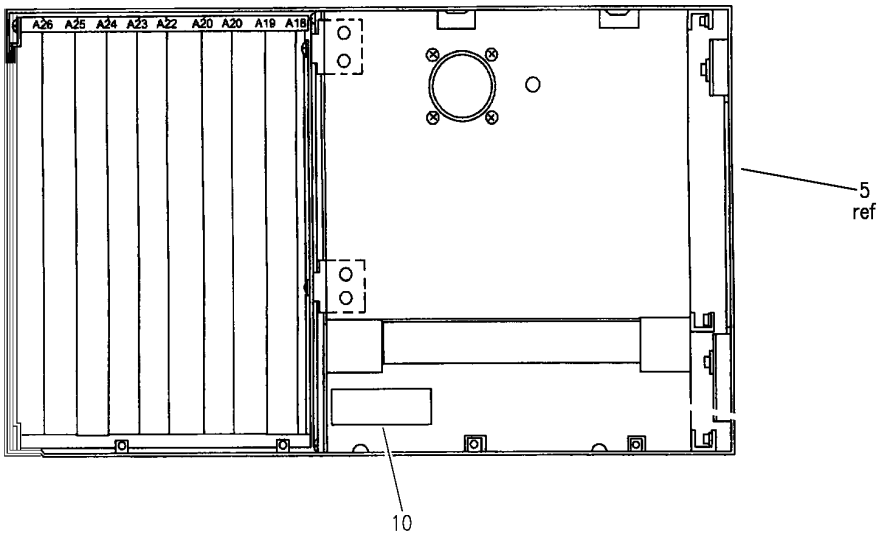

E

Y 31410208 SHT 4 REV 257

EQUIPMENT AND SOFTWARE INSTL- MAIN ELECTRONICS EQPT CTR ENG INDICATION AND CREW ALERTING SYS
FIGURE 8 (SHEET 4)

BOEING PROPRIETARY - Copyright © - Unpublished Work - See title page for details.

FIG ITEM	PART NUMBER	1 2 3 4 5 6 7 NOMENCLATURE	EFFECT FROM TO	UNITS PER ASSY
8				
		EQUIPMENT AND SOFTWARE	103106	
		INSTL- MAIN ELECTRONICS	108120	
		EQPT CTR ENG INDICATION		
		AND CREW ALERTING SYS		
- 1	284N4000-310001	EQUIPMENT INSTL-MAIN	108120	RF
		ELECTRONICS EQPT CTR ENG		
		INDICATION AND CREW		
		ALERTING SYS		
		FOR NHA SEE:		
		24-00-58-05F		
- 1	MODREF22679	EQUIPMENT INSTL-MAIN	103106	1
		ELECTRONICS EQPT CTR ENG		
		INDICATION AND CREW		
		ALERTING SYS		
		MODULE NUMBER:		
		284N4000-310001 REV B		
5	822-1033-100	.COMPUTER ASSY-	103106	2
		SUPPLIER CODE:	108120	
		V4V792		
		SPECIFICATION NUMBER:		
		S242N701-1001		
		ELECTRICAL EQUIP NUMBER:		
		M10181		
		M10182		
		COMPONENT MAINT MANUAL REF:		
		31-41-86		
		SOFTWARE DRAWING REF:		
		31-41-02-08		
10	829-0251-001	..PLATE-IDENTIFICATION	103106	1
		SUPPLIER CODE:	108120	
		V4V792		
15	830-6625-001	..STRIP-IDENTIFICATION	103106	1
		SUPPLIER CODE:	108120	
		V4V792		
20	280-2745-140	..LABEL-ESDS WARNING	103106	3
		SUPPLIER CODE:	108120	
		V12998		
25	21600-2	..CAP-DUST	103106	2
		SUPPLIER CODE:	108120	
		V00779		
30	MS27511F18C	..COVER-CONNECTOR	103106	1
			108120	
		ATTACHING PARTS		
- 35	MS51957-12B	..SCREW	103106	1
			108120	
		-------*-------		
40	651-2408-010	..HANDLE ASSY-	103106	1
		SUPPLIER CODE:	108120	
		V4V792		

MISSING ITEM NUMBERS NOT APPLICABLE

- ITEM NOT ILLUSTRATED

BOEING PROPRIETARY - Copyright © - Unpublished Work - See title page for details.

FIG ITEM	PART NUMBER	1 2 3 4 5 6 7 NOMENCLATURE	EFFECT FROM TO	UNITS PER ASSY
8				
		ATTACHING PARTS		
- 45	652-5421-001	..SCREW-	103106	2
		SUPPLIER CODE:	108120	
		V4V792		
- 50	768-3178-001	..WASHER-	103106	4
		SUPPLIER CODE:	108120	
		V4V792		
- 55	310-0007-050	..WASHER-	103106	2
		SUPPLIER CODE:	108120	
		V78189		
- 60	MS21042-06	..NUT	103106	2
			108120	
		-------*-------		
65	768-3387-024	...STRAP-	103106	1
		SUPPLIER CODE:	108120	
		V4V792		
70	768-3386-009	...BAR-GRIP	103106	1
		SUPPLIER CODE:	108120	
		V4V792		
- 200	286N1275-412	WIRE BUNDLE ASSY	108120	RF
- 204	286N1275-603	WIRE BUNDLE ASSY	103106	RF
205	BCREF15547	.CONNECTOR-	103106	2
		OVERLENGTH PART NUMBER:	108120	
		BACC66K38C63AA01		
		ELECTRICAL EQUIP NUMBER:		
		D00319		
		D00321		
		WIRING DIAGRAM REF:		
		314111		
		314121		
- 500	240N0002-530	SOFTWARE INSTL-EICAS OPC	108120	RF
		FOR NHA SEE:		
		25-10-00-22		
- 507	317EBCG00MF1	.SOFTWARE-EICAS OPC	108120	2
		MISCELLANEOUS DATA:		
		DISKETTE: 1 DISK		
		FOR SPARES PROCURE:		
		242N7010-2201		
		POST SERVICE BULLETIN:		
		34-0227		
- 600	242N7001-40	SOFTWARE INSTL-757 EICAS	106106	RF
		OPS		
- 600	242N7001-30	SOFTWARE INSTL-757 EICAS	108120	RF
		OPS		
		FOR NHA SEE:		
		25-10-00-20		

MISSING ITEM NUMBERS NOT APPLICABLE

- ITEM NOT ILLUSTRATED

BOEING PROPRIETARY - Copyright © - Unpublished Work - See title page for details.

FIG ITEM	PART NUMBER	1 2 3 4 5 6 7 NOMENCLATURE	EFFECT FROM TO	UNITS PER ASSY
8				
- 600	MODREF24481	SOFTWARE INSTL-757 EICAS OPS MODULE NUMBER: 242N7001-40 REV C	103106	1
- 605	3177C0LDE005	.SOFTWARE-OPS SUPPLIER CODE: V4V792 MISCELLANEOUS DATA: DISKETTE:1 DISK USED WITH: 822-1033-100 FOR SPARES PROCURE: 831-4565-104 V4V792	103106	2
- 605	3176C0LDE0-05	.SOFTWARE-OPS SUPPLIER CODE: V4V792 MISCELLANEOUS DATA: DISKETTE QTY: UNK USED WITH: 822-1033-100 FOR SPARES PROCURE: 831-4565-104 V4V792	103106	2
- 605	3170C0LDE003	.SOFTWARE-OPS SUPPLIER CODE: V4V792 MISCELLANEOUS DATA: DISKETTE:1 DISK USED WITH: 822-1033-100 FOR SPARES PROCURE: 831-4565-102 V4V792	108120	2
- 650	MODREF33893	SOFTWARE INSTL-757 EICAS OPC MODULE NUMBER: 240N0002-700 REV A	103106	1
- 655	316DBCG00MP4	.SOFTWARE-OPC MISCELLANEOUS DATA: DISKETTE:1 DISK USED WITH: 822-1033-100 FOR SPARES PROCURE: 242N7010-2224	103106	2

MISSING ITEM NUMBERS NOT APPLICABLE

- ITEM NOT ILLUSTRATED

BOEING PROPRIETARY - Copyright © - Unpublished Work - See title page for details.

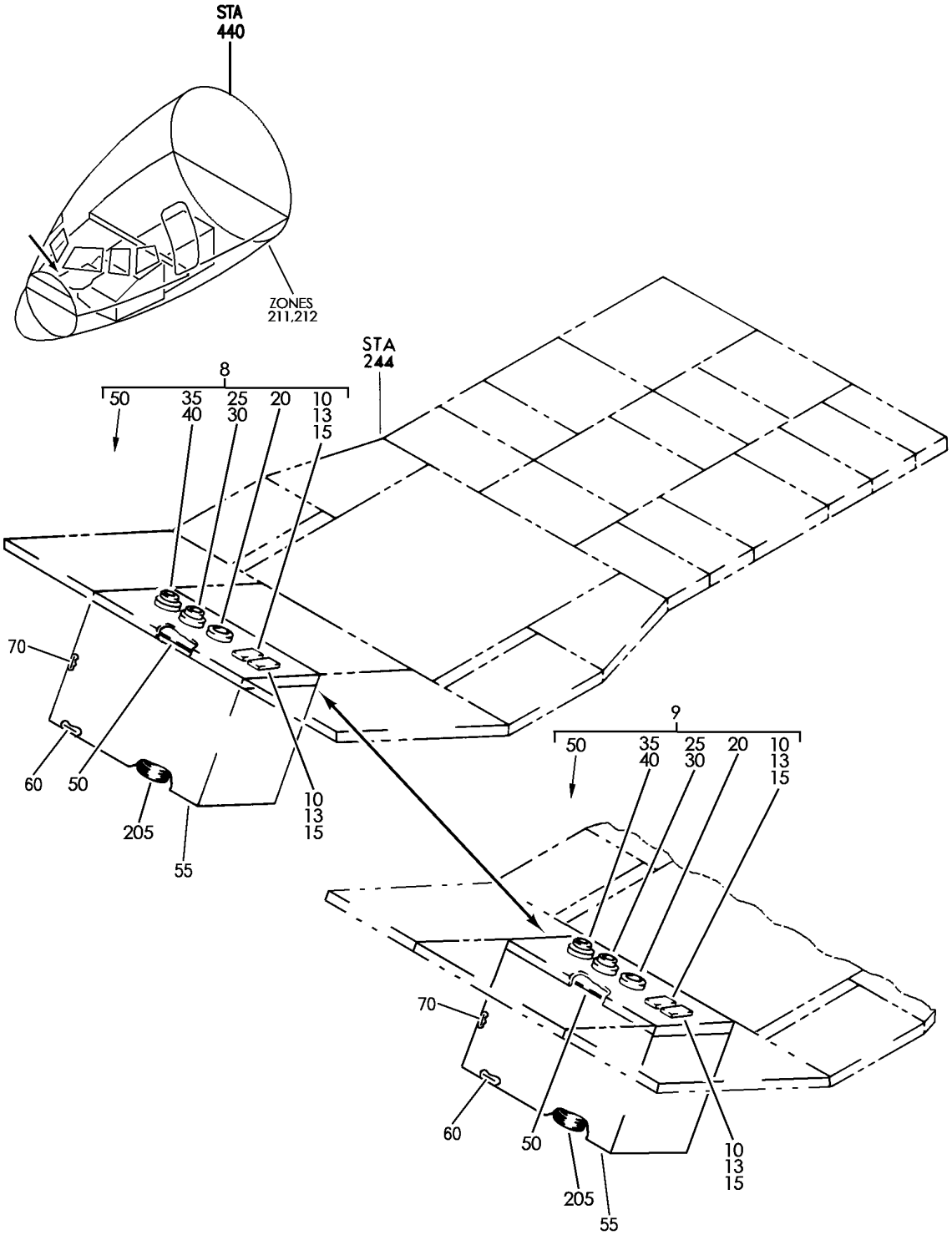

PANEL INSTL-P8, P9,P10 ELECTRONICS (ENGINE INDICATING AND CREW ALERTING SYS ONLY)
FIGURE 1

BOEING PROPRIETARY - Copyright © - Unpublished Work - See title page for details.

FIG ITEM	PART NUMBER	1 2 3 4 5 6 7 NOMENCLATURE	EFFECT FROM TO	UNITS PER ASSY
1		PANEL INSTL-P8, P9,P10 ELECTRONICS (ENGINE INDICATING AND CREW ALERTING SYS ONLY)	002004 006100 107107 121503 904999	
- 1	233N6101-1	PANEL INSTL-P8 ELECTRONIC (ENGINE INDICATING AND CREW ALERTING SYS ONLY) VARIABLE DRAWING REF: 233N6101-5004 233N6101-5028 233N6101-5041 233N6101-5042 233N6101-5046 FOR NHA/OTHER SYS DET SEE: 25-10-00-05A	002004 006100 107107 121503 904999	RF
8	622-6089-102	.PANEL ASSY-INDICATING AND CREW ALERTING SYS CONT SUPPLIER CODE: V4V792 FUNCTIONAL DESCRIPTION: PROVIDES ANALOG AND DIGITAL MODE/CONTROL SIGNALS TO THE EICAS COMPUTER AND DISPLAY UNITS SPECIFICATION NUMBER: S242N701-206 ELECTRICAL EQUIP NUMBER: M10195 COMPONENT MAINT MANUAL REF: 31-41-75 FUNCTIONAL REFERENCE: LIGHTS FOR DETAILS SEE 33-13-51-52F	002004 006100 107107 121503 904999	1

MISSING ITEM NUMBERS NOT APPLICABLE

- ITEM NOT ILLUSTRATED

BOEING PROPRIETARY - Copyright © - Unpublished Work - See title page for details.

FIG ITEM	PART NUMBER	1 2 3 4 5 6 7 NOMENCLATURE	EFFECT FROM TO	UNITS PER ASSY
1				
8	622-6089-101	.PANEL ASSY-ENG INDICATING AND CREW ALERTING SYS CONT SUPPLIER CODE: V4V792 SPECIFICATION NUMBER: S242N701-205 ELECTRICAL EQUIP NUMBER: M10195 COMPONENT MAINT MANUAL REF: 31-41-75 FUNCTIONAL REFERENCE: LIGHTS FOR DETAILS SEE 33-13-51-52F	002004 006100 107107 121503 904999	1
10	647-9083-001	..PUSHBUTTON ASSY- SUPPLIER CODE: V4V792	002004 006100 107107 121503 904999	2
13	FGBLACK	...BUTTON- SUPPLIER CODE: V31918 CONFIG CHG DATA FROM A CMM: SUPERSEDES 266-7508-130	002004 006100 107107 121503 904999	1
13	266-7508-130	...SWITCH- SUPPLIER CODE: V4V792 CONFIG CHG DATA FROM A CMM: SUPSD BY FGBLACK	002004 006100 107107 121503 904999	1
15	647-9081-001	...PUSHBUTTON- SUPPLIER CODE: V4V792	002004 006100 107107 121503 904999	1
20	RD240-112	..KNOB-PLASTIC SUPPLIER CODE: V81590	002004 006100 107107 121503 904999	1
25	RD238-110	..KNOB-PLASTIC SUPPLIER CODE: V81590	002004 006100 107107 121503 904999	1

MISSING ITEM NUMBERS NOT APPLICABLE

– ITEM NOT ILLUSTRATED

BOEING PROPRIETARY - Copyright © - Unpublished Work - See title page for details.

FIG ITEM	PART NUMBER	1 2 3 4 5 6 7 NOMENCLATURE	EFFECT FROM TO	UNITS PER ASSY
1				
30	RC446-113	..KNOB-PLASTIC SUPPLIER CODE: V81590	002004 006100 107107 121503 904999	1
35	RC446-106	..KNOB-PLASTIC SUPPLIER CODE: V81590	002004 006100 107107 121503 904999	1
40	RD238-118	..KNOB-PLASTIC SUPPLIER CODE: V81590	002004 006100 107107 121503 904999	1
50	647-5942-001	..GASKET-PNL SUPPLIER CODE: V4V792	002004 006100 107107 121503 904999	1
55	646-1825-000	.PLATE-IDENT SUPPLIER CODE: V4V792	002004 006100 107107 121503 904999	1
60	791-0688-001	.PLATE-IDENT SUPPLIER CODE: V4V792	002004 006100 107107 121503 904999	1
		ATTACHING PARTS		
- 65	MS51957-2	.SCREW	002004 006100 107107 121503 904999	4
		-------*-------		
70	280-2745-010	.LABEL-ESDS SUPPLIER CODE: V12998 CONFIG CHG DATA FROM A CMM: SUPSD BY 280-2745-130	002004 006100 107107 121503 904999	1
70	280-2745-130	.LABEL-ESDS SUPPLIER CODE: V12998 CONFIG CHG DATA FROM A CMM: SUPSDS 280-2745-010	002004 006100 107107 121503 904999	1

MISSING ITEM NUMBERS NOT APPLICABLE

- ITEM NOT ILLUSTRATED

BOEING PROPRIETARY - Copyright © - Unpublished Work - See title page for details.

FIG ITEM	PART NUMBER	1 2 3 4 5 6 7 NOMENCLATURE	EFFECT FROM TO	UNITS PER ASSY
1				
- 200	286N2315-002	WIRE BUNDLE ASSY-(ENGINE INDICATING AND CREW ALERTING SYS ONLY)	121503 904949	RF
- 200	286N2315-007	WIRE BUNDLE ASSY-(ENGINE INDICATING AND CREW ALERTING SYS ONLY)	107107	RF
- 200	286N2315-009	WIRE BUNDLE ASSY-(ENGINE INDICATING AND CREW ALERTING SYS ONLY)	002004 006010 950999	RF
- 200	286N2315-016	WIRE BUNDLE ASSY-(ENGINE INDICATING AND CREW ALERTING SYS ONLY)	011100	RF
205	BACC45FT20D41S6	.CONNECTOR- ELECTRICAL EQUIP NUMBER: D00331 WIRING DIAGRAM REF: 314114	002004 006100 107107 121503 904999	1

MISSING ITEM NUMBERS NOT APPLICABLE

- ITEM NOT ILLUSTRATED

BOEING PROPRIETARY - Copyright © - Unpublished Work - See title page for details.

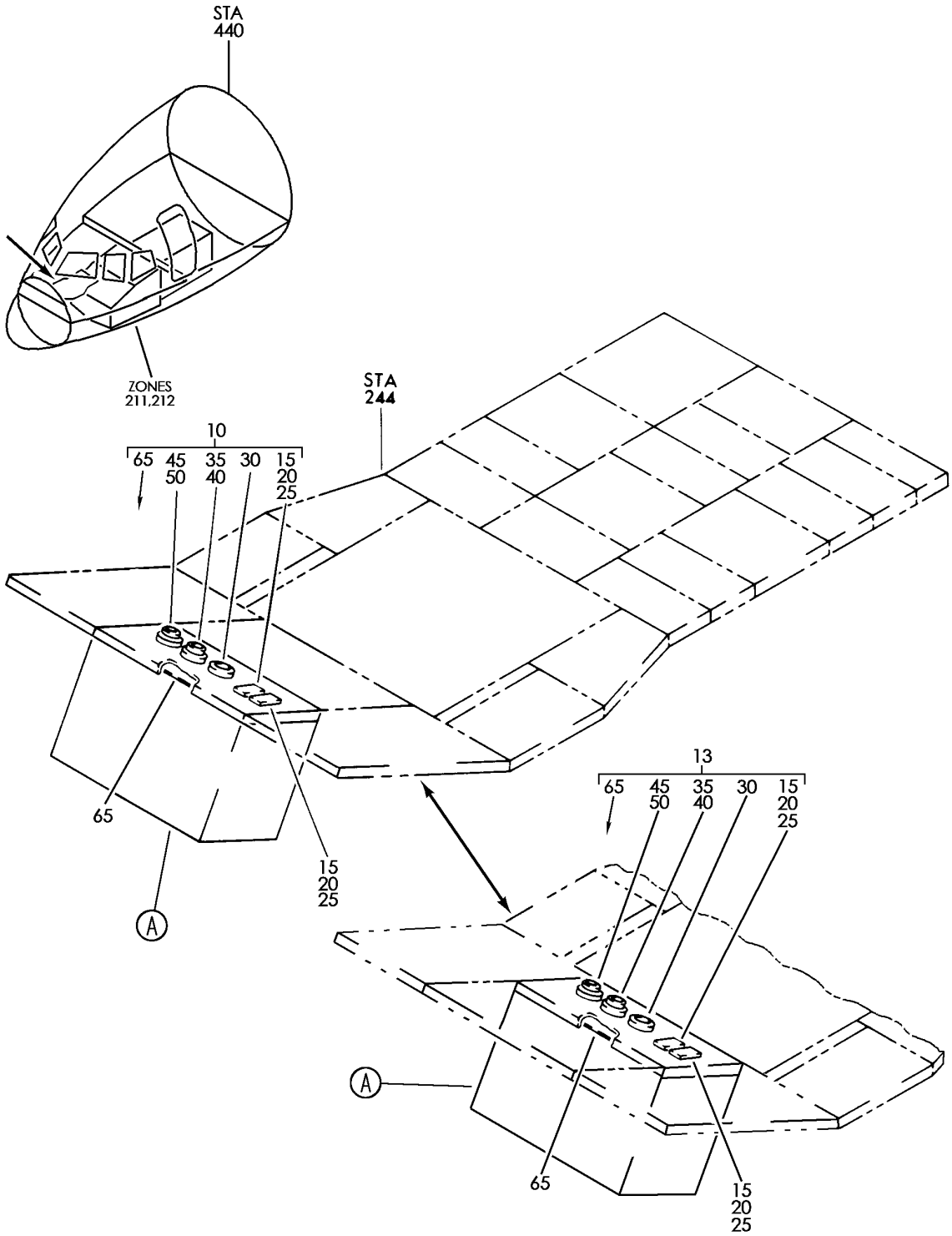

PANEL INSTL-P8,P9,P10 ELECTRONICS (CENTRAL COMPUTERS ONLY)
FIGURE 2 (SHEET 1)

BOEING PROPRIETARY - Copyright © - Unpublished Work - See title page for details.

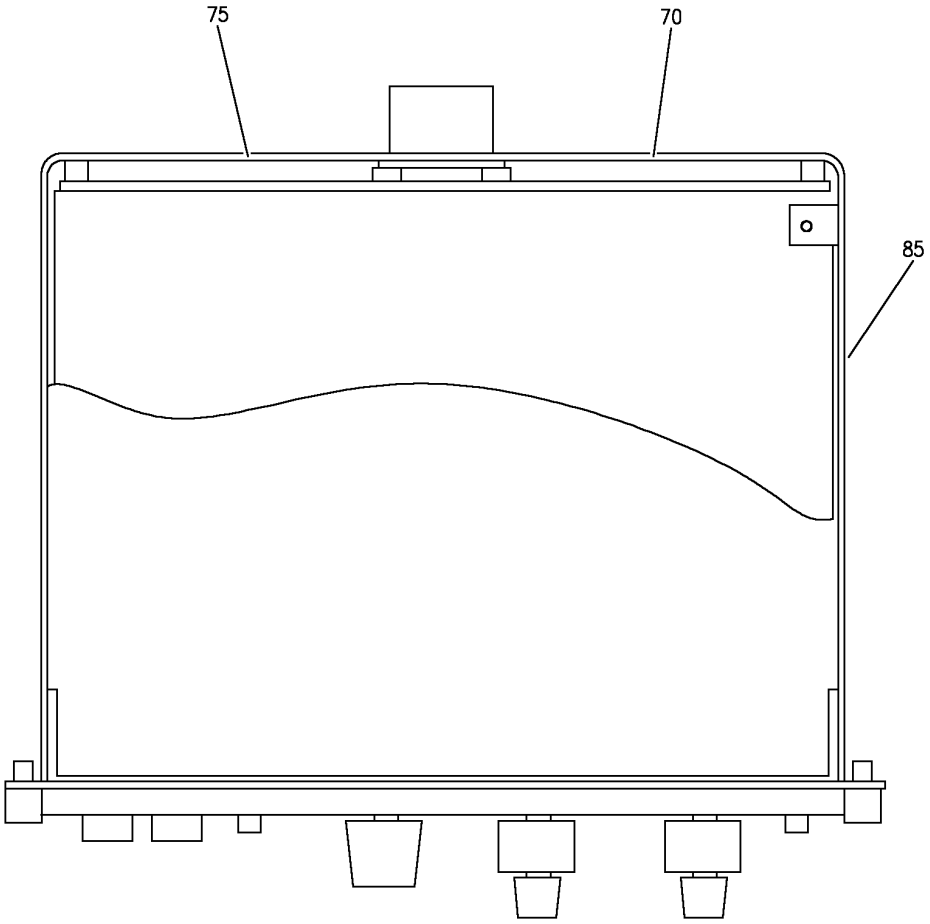

A

Y 31410302 SHT 2 REV 258

PANEL INSTL-P8,P9,P10 ELECTRONICS (CENTRAL COMPUTERS ONLY)
FIGURE 2 (SHEET 2)

BOEING PROPRIETARY - Copyright © - Unpublished Work - See title page for details.

FIG ITEM	PART NUMBER	1 2 3 4 5 6 7 NOMENCLATURE	EFFECT FROM TO	UNITS PER ASSY
2				
		PANEL INSTL-P8,P9,P10 ELECTRONICS (CENTRAL COMPUTERS ONLY)	101106 108120 504903	
- 1	233N6103-62	PANEL INSTL-P8,P9,P10 ELECTRONICS (CENTRAL COMPUTERS ONLY) FOR NHA/OTHER SYS DET SEE: 25-10-00-15B	108120	RF
- 2	233N6103-122	PANEL INSTL-P8,P9,P10 ELECTRONICS (CENTRAL COMPUTERS ONLY) FOR NHA/OTHER SYS DET SEE: 25-10-00-15B	504903	RF
- 2	233N6103-128	PANEL INSTL-P8,P9,P10 ELECTRONICS (CENTRAL COMPUTERS ONLY) FOR NHA/OTHER SYS DET SEE: 25-10-00-15B	102102	RF
- 3	233N6103-28	PANEL INSTL-P8,P9,P10 ELECTRONICS (CENTRAL COMPUTERS ONLY) FOR NHA/OTHER SYS DET SEE: 25-10-00-15B	101101	RF

MISSING ITEM NUMBERS NOT APPLICABLE

- ITEM NOT ILLUSTRATED

BOEING PROPRIETARY - Copyright © - Unpublished Work - See title page for details.

FIG ITEM	PART NUMBER	1 2 3 4 5 6 7 NOMENCLATURE	EFFECT FROM TO	UNITS PER ASSY
2				
- 7	MODREF33990	PANEL INSTL-P8,P9,P10 ELECTRONICS (CENTRAL COMPUTERS ONLY) MODULE NUMBER: 233N6103-253 REV B FOR OTHER SYS DETAILS SEE: 11-31-05-66F 23-12-02-03 23-51-01-05 26-11-02-01 26-11-54-02A 26-12-51-03 26-17-51-06 26-21-01-02 26-22-03-03 26-23-52-04A 27-11-23-03 27-21-23-03 27-28-02-01A 31-11-31-02 31-11-36-78 31-11-41-02 33-13-01-07 34-22-02-03 34-31-02-02 34-43-02-02 34-53-02-02 34-57-02-03 34-61-02-03	103106	1

MISSING ITEM NUMBERS NOT APPLICABLE

- ITEM NOT ILLUSTRATED

BOEING PROPRIETARY - Copyright © - Unpublished Work - See title page for details.

FIG ITEM	PART NUMBER	1 2 3 4 5 6 7 NOMENCLATURE	EFFECT FROM TO	UNITS PER ASSY
2				
10	622-6089-102	.PANEL ASSY-ENG INDICATING AND CREW ALERTING SYS DISPLAY SELECTOR SUPPLIER CODE: V4V792 FUNCTIONAL DESCRIPTION: PROVIDES ANALOG AND DIGITAL MODE/CONTROL SIGNALS TO THE EICAS COMPUTER AND DISPLAY UNITS SPECIFICATION NUMBER: S242N701-206 ELECTRICAL EQUIP NUMBER: M10195 COMPONENT MAINT MANUAL REF: 31-41-75 FUNCTIONAL REFERENCE: LIGHTS FOR DETAILS SEE 33-13-51-52F	101106 108120 504903	1
10	622-6089-101	.PANEL ASSY-ENG INDICATING AND CREW ALERTING SYS DISPLAY SELECTOR SUPPLIER CODE: V4V792 SPECIFICATION NUMBER: S242N701-205 ELECTRICAL EQUIP NUMBER: M10195 COMPONENT MAINT MANUAL REF: 31-41-75 FUNCTIONAL REFERENCE: LIGHTS FOR DETAILS SEE 33-13-51-52F	101106 108120 504903	1
15	647-9083-001	..PUSHBUTTON ASSY- SUPPLIER CODE: V4V792	101106 108120 504903	2
20	FGBLACK	...BUTTON- SUPPLIER CODE: V31918	101106 108120 504903	1
20	266-7508-130	...SWITCH- SUPPLIER CODE: V4V792	101106 108120 504903	1

MISSING ITEM NUMBERS NOT APPLICABLE

– ITEM NOT ILLUSTRATED

BOEING PROPRIETARY - Copyright © - Unpublished Work - See title page for details.

FIG ITEM	PART NUMBER	1 2 3 4 5 6 7 NOMENCLATURE	EFFECT FROM TO	UNITS PER ASSY
2				
20	266-7508-130	...SWITCH-	101106	1
		SUPPLIER CODE:	108120	
		V4V792	504903	
		CONFIG CHG DATA FROM A CMM:		
		SUPSD BY FGBLACK		
20	FGBLACK	...BUTTON-	101106	1
		SUPPLIER CODE:	108120	
		V31918	504903	
		CONFIG CHG DATA FROM A CMM:		
		SUPSDS 266-7508-130		
25	647-9081-001	...PUSHBUTTON-	101106	1
		SUPPLIER CODE:	108120	
		V4V792	504903	
30	RD240-112	..KNOB-PLASTIC	101106	1
		SUPPLIER CODE:	108120	
		V81590	504903	
35	RD238-110	..KNOB-PLASTIC	101106	1
		SUPPLIER CODE:	108120	
		V81590	504903	
40	RC446-113	..KNOB-PLASTIC	101106	1
		SUPPLIER CODE:	108120	
		V81590	504903	
45	RC446-106	..KNOB-PLASTIC	101106	1
		SUPPLIER CODE:	108120	
		V81590	504903	
50	RD238-118	..KNOB-PLASTIC	101106	1
		SUPPLIER CODE:	108120	
		V81590	504903	
65	647-5942-001	..GASKET-PNL	101106	1
		SUPPLIER CODE:	108120	
		V4V792	504903	
70	646-1825-000	..PLATE-IDENT	101106	1
		SUPPLIER CODE:	108120	
		V4V792	504903	
75	791-0688-001	..PLATE-IDENT	101106	1
		SUPPLIER CODE:	108120	
		V4V792	504903	
		ATTACHING PARTS		
- 80	MS51957-2	..SCREW	101106	4
			108120	
			504903	
		-------*-------		
85	280-2745-010	..LABEL-ESDS	101106	1
		SUPPLIER CODE:	108120	
		V12998	504903	
		CONFIG CHG DATA FROM A CMM:		
		SUPSD BY 280-2745-130		

MISSING ITEM NUMBERS NOT APPLICABLE

- ITEM NOT ILLUSTRATED

BOEING PROPRIETARY - Copyright © - Unpublished Work - See title page for details.

FIG ITEM	PART NUMBER	1 2 3 4 5 6 7 NOMENCLATURE	EFFECT FROM TO	UNITS PER ASSY
2				
85	280-2745-130	..LABEL-ESDS SUPPLIER CODE: V12998 CONFIG CHG DATA FROM A CMM: SUPSDS 280-2745-010	101106 108120 504903	1

MISSING ITEM NUMBERS NOT APPLICABLE

– ITEM NOT ILLUSTRATED

BOEING PROPRIETARY - Copyright © - Unpublished Work - See title page for details.

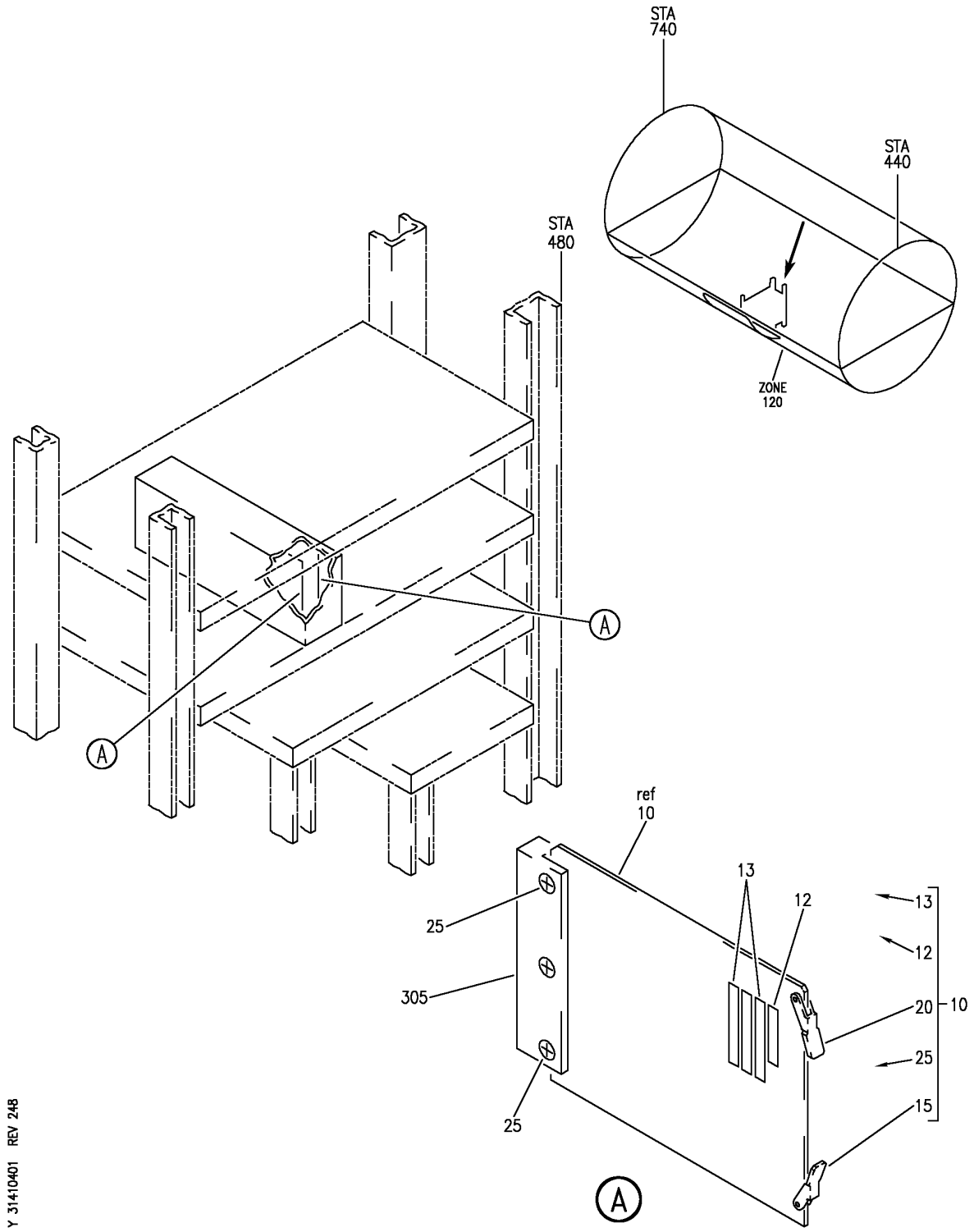

EQUIPMENT INSTL-MAIN ELECTRONICS EQPT CTR (EICAS DISPLAY SWITCHING MODULE ONLY)
FIGURE 1

BOEING PROPRIETARY - Copyright © - Unpublished Work - See title page for details.

FIG ITEM	PART NUMBER	1 2 3 4 5 6 7 NOMENCLATURE	EFFECT FROM TO	UNITS PER ASSY
1		EQUIPMENT INSTL-MAIN ELECTRONICS EQPT CTR (EICAS DISPLAY SWITCHING MODULE ONLY)	002004 006100 107107 121999	
- 1	284N1800-88	EQUIPMENT INSTL-MAIN ELECTRONICS EQPT CTR (EICAS DISPLAY SWITCHING MODULE ONLY) FOR NHA/OTHER SYS DET SEE: 24-00-58-05E	505505	RF
- 3	284N1307-33	EQUIPMENT INSTL-MAIN ELECTRONICS EQPT CTR (EICAS DISPLAY SWITCHING MODULE ONLY) FOR NHA/OTHER SYS DET SEE: 24-00-58-01	107107	RF
- 5	284N1800-16	EQUIPMENT INSTL-MAIN ELECTRONICS EQPT CTR (EICAS DISPLAY SWITCHING MODULE ONLY) FOR NHA/OTHER SYS DET SEE: 24-00-58-01	121503 904949	RF
- 6	284N1800-32	EQUIPMENT INSTL-MAIN ELECTRONICS EQPT CTR (EICAS DISPLAY SWITCHING MODULE ONLY) FOR NHA/OTHER SYS DET SEE: 24-00-58-01	952999	RF
- 6	284N1800-34	EQUIPMENT INSTL-MAIN ELECTRONICS EQPT CTR (EICAS DISPLAY SWITCHING MODULE ONLY) FOR NHA/OTHER SYS DET SEE: 24-00-58-01	002004 006100	RF
- 6	284N1800-38	EQUIPMENT INSTL-MAIN ELECTRONICS EQPT CTR (EICAS DISPLAY SWITCHING MODULE ONLY) FOR NHA/OTHER SYS DET SEE: 24-00-58-01	950951	RF
- 7	284N1800-190	EQUIPMENT INSTL-MAIN ELECTRONICS EQPT CTR (EICAS DISPLAY SWITCHING MODULE ONLY) FOR NHA/OTHER SYS DET SEE: 24-00-58-05E	504504 506903	RF

MISSING ITEM NUMBERS NOT APPLICABLE

- ITEM NOT ILLUSTRATED

BOEING PROPRIETARY - Copyright © - Unpublished Work - See title page for details.

FIG ITEM	PART NUMBER	1 2 3 4 5 6 7 NOMENCLATURE	EFFECT FROM TO	UNITS PER ASSY
1				
10	285N0055-1	.PRINTED CIRCUIT ASSY-EICAS DISPLAY SWITCHING SUPPLIER CODE: V89954 ELECTRICAL EQUIP NUMBER: M10417 M10418 COMPONENT MAINT MANUAL REF: 31-41-51	002004 006100 107107 121999	2
12	S906-10207-4	..LABEL-BAR CODE MANUFACTURER	002004 006100 107107 121999	1
13	S906-10207-2	..LABEL-BAR CODE PN, SERIAL NO. AND MOD LEVEL	002004 006100 107107 121999	3
15	71-2LA	..EXTRACTOR- SUPPLIER CODE: V18915	002004 006100 107107 121999	1
20	71-2RA	..EXTRACTOR- SUPPLIER CODE: V18915	002004 006100 107107 121999	1
25	MS35214-14	..SCREW	002004 006100 107107 121999	3
- 301	286N1275-369	WIRE BUNDLE ASSY	504903	RF
- 301	286N1275-002	WIRE BUNDLE ASSY- REWORKED BY SB: 31-0059 REWORKED BY ALERT SB: 34A0222	107107	RF
- 301	286N1275-004	WIRE BUNDLE ASSY- REWORKED BY SB: 31-0059 REWORKED BY ALERT SB: 34A0222	121503 904949	RF
- 302	286N1275-011	WIRE BUNDLE ASSY- REWORKED BY SB: 31-0059 34-0200 REWORKED BY ALERT SB: 34A0222	002004 006100 950999	RF

MISSING ITEM NUMBERS NOT APPLICABLE

- ITEM NOT ILLUSTRATED

BOEING PROPRIETARY - Copyright © - Unpublished Work - See title page for details.

FIG ITEM	PART NUMBER	1 2 3 4 5 6 7 NOMENCLATURE	EFFECT FROM TO	UNITS PER ASSY
1				
305	300206-001	.CONNECTOR-	002004	2
		SUPPLIER CODE:	006100	
		V0D9V3	107107	
		SPECIFICATION NUMBER:	121999	
		BACC65L114		
		OPTIONAL PART:		
		200627-01		
		V16512		
		300206-001		
		V03877		
		192-314-0007		
		V26742		
		S1026-00833		
		V03877		
		ELECTRICAL EQUIP NUMBER:		
		D00789		
		D00791		
		WIRING DIAGRAM REF:		
		314111		
		314121		

MISSING ITEM NUMBERS NOT APPLICABLE

– ITEM NOT ILLUSTRATED

BOEING PROPRIETARY - Copyright © - Unpublished Work - See title page for details.

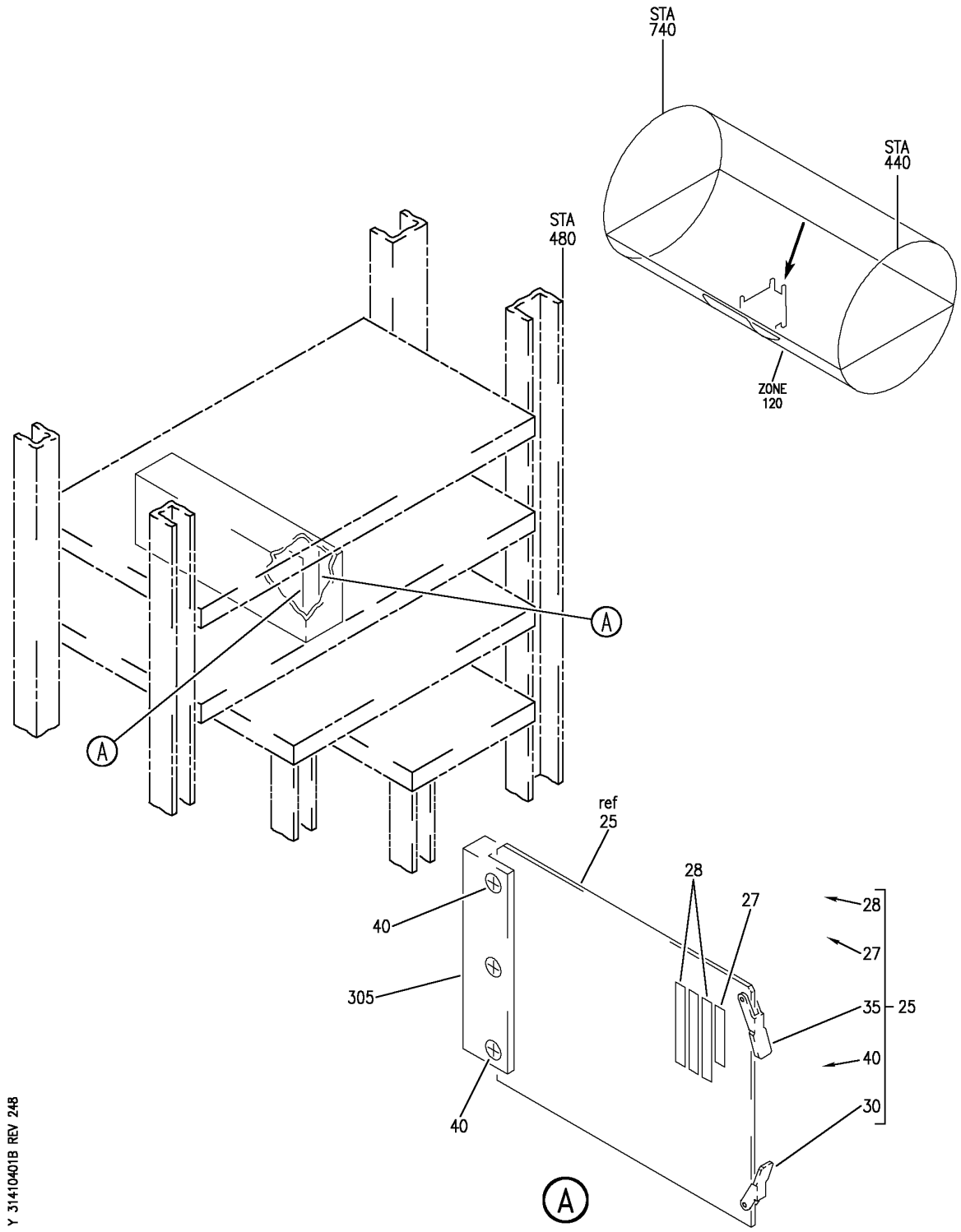

EQUIPMENT INSTL-MAIN ELECTRONICS EQPT CTR (EICAS DISPLAY SWITCHING MODULE ONLY)
FIGURE 1B

BOEING PROPRIETARY - Copyright © - Unpublished Work - See title page for details.

FIG ITEM	PART NUMBER	1 2 3 4 5 6 7 NOMENCLATURE	EFFECT FROM TO	UNITS PER ASSY
1B				
		EQUIPMENT INSTL-MAIN ELECTRONICS EQPT CTR (EICAS DISPLAY SWITCHING MODULE ONLY)	101102	
- 2	284N1800-140	EQUIPMENT INSTL-MAIN ELECTRONICS EQPT CTR (EICAS DISPLAY SWITCHING MODULE ONLY) FOR NHA/OTHER SYS DET SEE: 24-00-58-05E	101101	RF
- 2	284N1800-141	EQUIPMENT INSTL-MAIN ELECTRONICS EQPT CTR (EICAS DISPLAY SWITCHING MODULE ONLY) FOR NHA/OTHER SYS DET SEE: 24-00-58-05E	102102	RF
25	285N0055-1	.PRINTED CIRCUIT ASSY-EICAS DISPLAY SWITCHING SUPPLIER CODE: V89954 ELECTRICAL EQUIP NUMBER: M10417 M10418 COMPONENT MAINT MANUAL REF: 31-41-51	101102	2
27	S906-10207-4	..LABEL-BAR CODE MANUFACTURER	101102	1
28	S906-10207-2	..LABEL-BAR CODE PN, SERIAL NO. AND MOD LEVEL	101102	3
30	71-2LA	..EXTRACTOR- SUPPLIER CODE: V18915	101102	1
35	71-2RA	..EXTRACTOR- SUPPLIER CODE: V18915	101102	1
40	MS35214-14	..SCREW	101102	3
- 301	286N1275-393	WIRE BUNDLE ASSY	101101	RF
- 301	286N1275-397	WIRE BUNDLE ASSY	102102	RF

MISSING ITEM NUMBERS NOT APPLICABLE

- ITEM NOT ILLUSTRATED

BOEING PROPRIETARY - Copyright © - Unpublished Work - See title page for details.

FIG ITEM	PART NUMBER	1 2 3 4 5 6 7 NOMENCLATURE	EFFECT FROM TO	UNITS PER ASSY
1B				
305	300206-001	.CONNECTOR-	101102	2
		SUPPLIER CODE:		
		V0D9V3		
		SPECIFICATION NUMBER:		
		BACC65L114		
		OPTIONAL PART:		
		200627-01		
		V16512		
		300206-001		
		V03877		
		192-314-0007		
		V26742		
		S1026-00833		
		V03877		
		ELECTRICAL EQUIP NUMBER:		
		D00789		
		D00791		
		WIRING DIAGRAM REF:		
		314111		
		314121		

MISSING ITEM NUMBERS NOT APPLICABLE

– ITEM NOT ILLUSTRATED

BOEING PROPRIETARY - Copyright © - Unpublished Work - See title page for details.

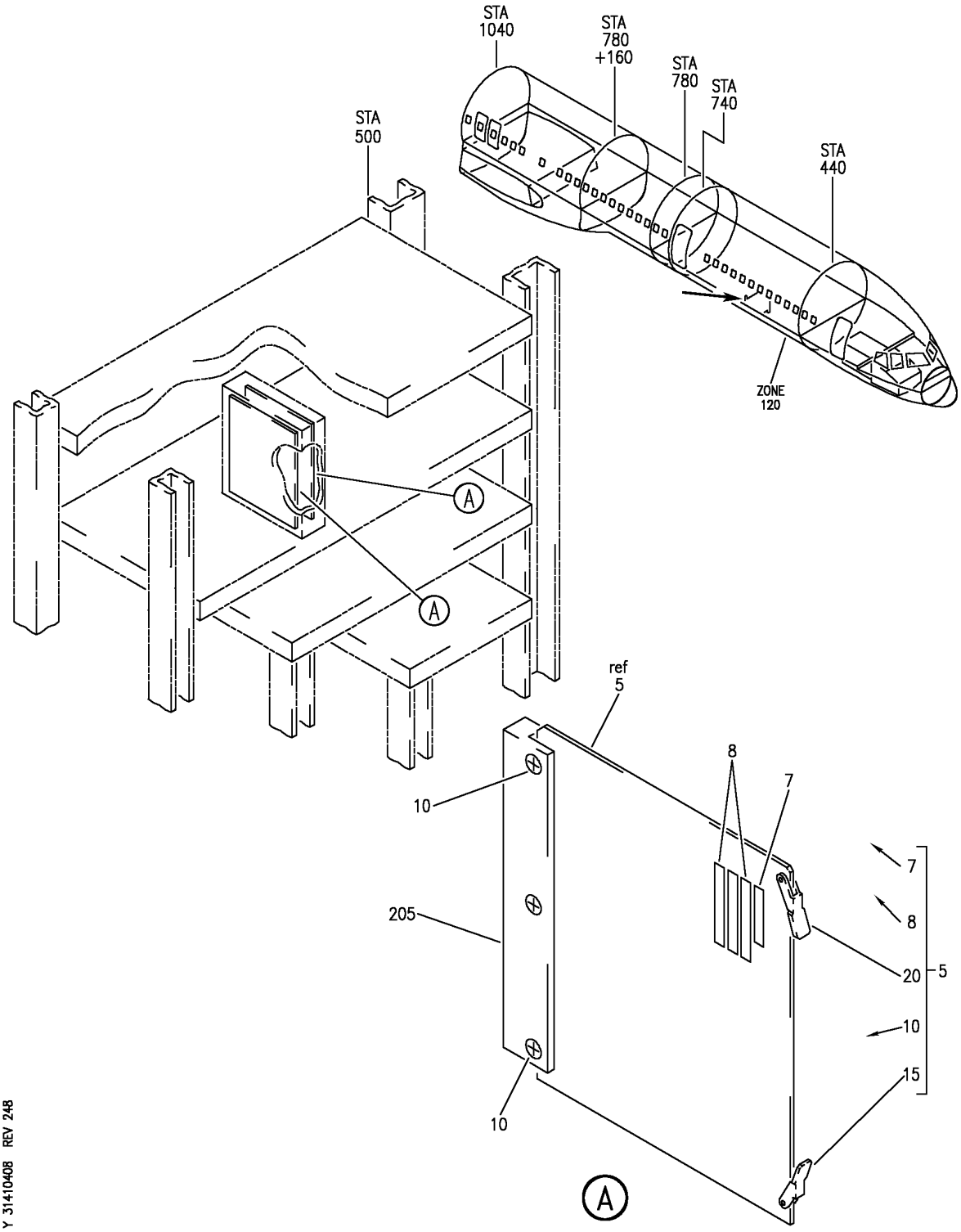

EQUIPMENT INSTL-MAIN ELECTRONICS EQPT CTR EICAS DISPLAY SWITCHING MODULE
FIGURE 8

BOEING PROPRIETARY - Copyright © - Unpublished Work - See title page for details.

FIG ITEM	PART NUMBER	1 2 3 4 5 6 7 NOMENCLATURE	EFFECT FROM TO	UNITS PER ASSY
8				
		EQUIPMENT INSTL-MAIN	103106	
		ELECTRONICS EQPT CTR	108120	
		EICAS DISPLAY SWITCHING		
		MODULE		
- 1	284N4000-310002	EQUIPMENT INSTL-MAIN	108120	RF
		ELECTRONICS EQPT CTR		
		EICAS DISPLAY SWITCHING		
		MODULE		
		FOR NHA SEE:		
		24-00-58-05		
- 1	MODREF10050	EQUIPMENT INSTL-MAIN	103106	1
		ELECTRONICS EQPT CTR		
		EICAS DISPLAY SWITCHING		
		MODULE		
		MODULE NUMBER:		
		284N4000-310002 REV A		
5	285N0055-1	.PRINTED CIRCUIT ASSY-	103106	2
		SUPPLIER CODE:	108120	
		V89954		
		ELECTRICAL EQUIP NUMBER:		
		M10417		
		M10418		
		COMPONENT MAINT MANUAL REF:		
		31-41-51		
7	S906-10207-4	..LABEL-BAR CODE	103106	1
		MANUFACTURER	108120	
8	S906-10207-2	..LABEL-BAR CODE	103106	3
		PN, SERIAL NO. AND	108120	
		MOD LEVEL		
10	MS35214-14	..SCREW	103106	3
			108120	
15	71-2LA	..EXTRACTOR-	103106	1
		SUPPLIER CODE:	108120	
		V18915		
20	71-2RA	..EXTRACTOR-	103106	1
		SUPPLIER CODE:	108120	
		V18915		
- 200	286N1275-412	WIRE BUNDLE ASSY-	108120	RF
- 201	286N1275-603	WIRE BUNDLE ASSY	103106	RF

MISSING ITEM NUMBERS NOT APPLICABLE

- ITEM NOT ILLUSTRATED

BOEING PROPRIETARY - Copyright © - Unpublished Work - See title page for details.

FIG ITEM	PART NUMBER	1 2 3 4 5 6 7 NOMENCLATURE	EFFECT FROM TO	UNITS PER ASSY
8				
205	300206-001	.CONNECTOR-	103106	2
		SUPPLIER CODE:	108120	
		V0D9V3		
		SPECIFICATION NUMBER:		
		BACC65L114		
		OPTIONAL PART:		
		200627-01		
		V16512		
		300206-001		
		V03877		
		192-314-0007		
		V26742		
		S1026-00833		
		V03877		
		ELECTRICAL EQUIP NUMBER:		
		D00789		
		D00791		
		WIRING DIAGRAM REF:		
		314111		
		314121		

MISSING ITEM NUMBERS NOT APPLICABLE

— ITEM NOT ILLUSTRATED

BOEING PROPRIETARY - Copyright © - Unpublished Work - See title page for details.

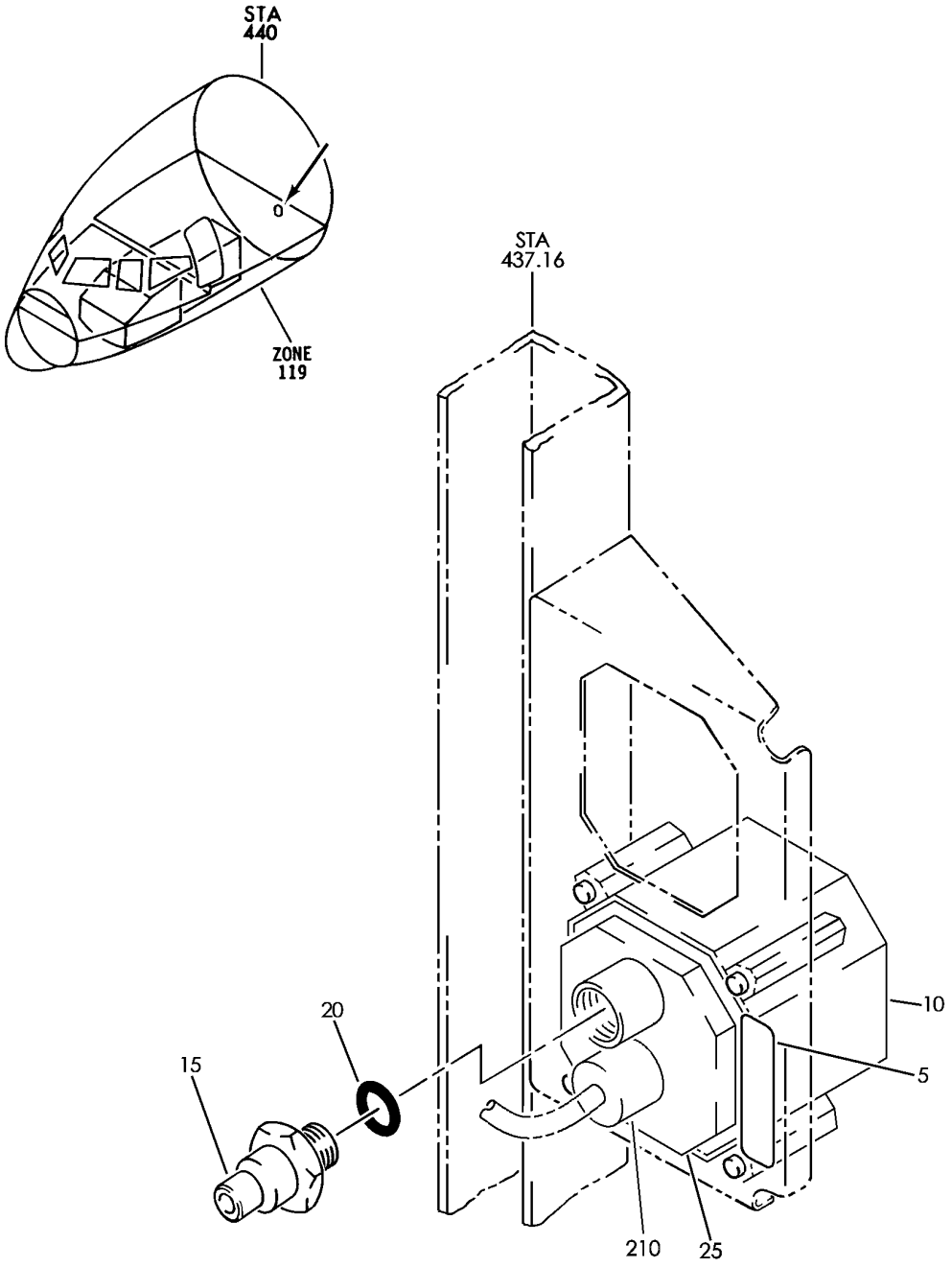

Y 31415101 REV 233

SWITCH INSTL-ELECTRONICS EQPT CTR ALTITUDE PRESSURE (INDICATING AND RECORDING SYSTEMS ONLY)
FIGURE 1

BOEING PROPRIETARY - Copyright © - Unpublished Work - See title page for details.

	FIG ITEM	PART NUMBER	1 2 3 4 5 6 7 NOMENCLATURE	EFFECT FROM TO	UNITS PER ASSY
	1				
			SWITCH INSTL-ELECTRONICS	103106	
			EQPT CTR ALTITUDE	108120	
			PRESSURE (INDICATING AND	504903	
			RECORDING SYSTEMS ONLY)		
	- 1	284N1050-6	SWITCH INSTL-ELECTRONICS	108120	RF
			EQPT CTR ALTITUDE	504903	
			PRESSURE (INDICATING AND		
			RECORDING SYSTEMS ONLY)		
			FOR NHA/OTHER SYS DET SEE:		
			24-00-58-05C		
	- 1	MODREF33298	SWITCH INSTL-ELECTRONICS	103106	1
			EQPT CTR ALTITUDE		
			PRESSURE (INDICATING AND		
			RECORDING SYSTEMS ONLY)		
			MODULE NUMBER:		
			284N1050-6 REV B		
			FOR OTHER SYS DETAILS SEE:		
			29-21-53-01		
R	10	123-2	.CLAMP-INSTR	103106	1
R			SUPPLIER CODE:	108120	
R			V33463	504903	
R	10	123-2222F	.CLAMP-INSTR	103106	1
R			SUPPLIER CODE:	108120	
R			V33463	504903	
	15	1QM1-3-54A	.QUICK DISCONNECT-	103106	1
			SUPPLIER CODE:	108120	
			V31441	504903	
	20	MS28778-5	.PACKING	103106	1
				108120	
				504903	
R	25	6502-10K	.SWITCH ASSY-ALTITUDE	103106	1
R			PRESSURE	108120	
R			SUPPLIER CODE:	504903	
R			V07147		
R			FUNCTIONAL DESCRIPTION:		
R			AN INSTRUMENT WHICH		
R			PROVIDES AN ELECTRICAL		
R			SIGNAL AT A PRESET		
R			ALTITUDE		
R			ELECTRICAL EQUIP NUMBER:		
R			S10618		
R			COMPONENT MAINT MANUAL REF:		
R			34-11-15		
	- 202	286N4471-350	WIRE BUNDLE ASSY-	504504	1
			REWORKED BY ALERT SB:	506903	
			34A0222		
	- 203	286N4471-374	WIRE BUNDLE ASSY-	505505	1
			REWORKED BY ALERT SB:		
			34A0222		

MISSING ITEM NUMBERS NOT APPLICABLE

- ITEM NOT ILLUSTRATED

BOEING PROPRIETARY - Copyright © - Unpublished Work - See title page for details.

	FIG ITEM	PART NUMBER	1 2 3 4 5 6 7 NOMENCLATURE	EFFECT FROM TO	UNITS PER ASSY
	1				
	- 204	286N4471-601	WIRE BUNDLE ASSY	103105	1
R	- 205	286N4471-426	WIRE BUNDLE ASSY	108120	1
R	- 206	286N4471-604	WIRE BUNDLE ASSY	106106	RF
	210	BACC45FT10A5S	.CONNECTOR-	103106	1
			ELECTRICAL EQUIP NUMBER:	108120	
			D02523	504903	
			WIRING DIAGRAM REF:		
			314119		

MISSING ITEM NUMBERS NOT APPLICABLE

- ITEM NOT ILLUSTRATED

BOEING PROPRIETARY - Copyright © - Unpublished Work - See title page for details.

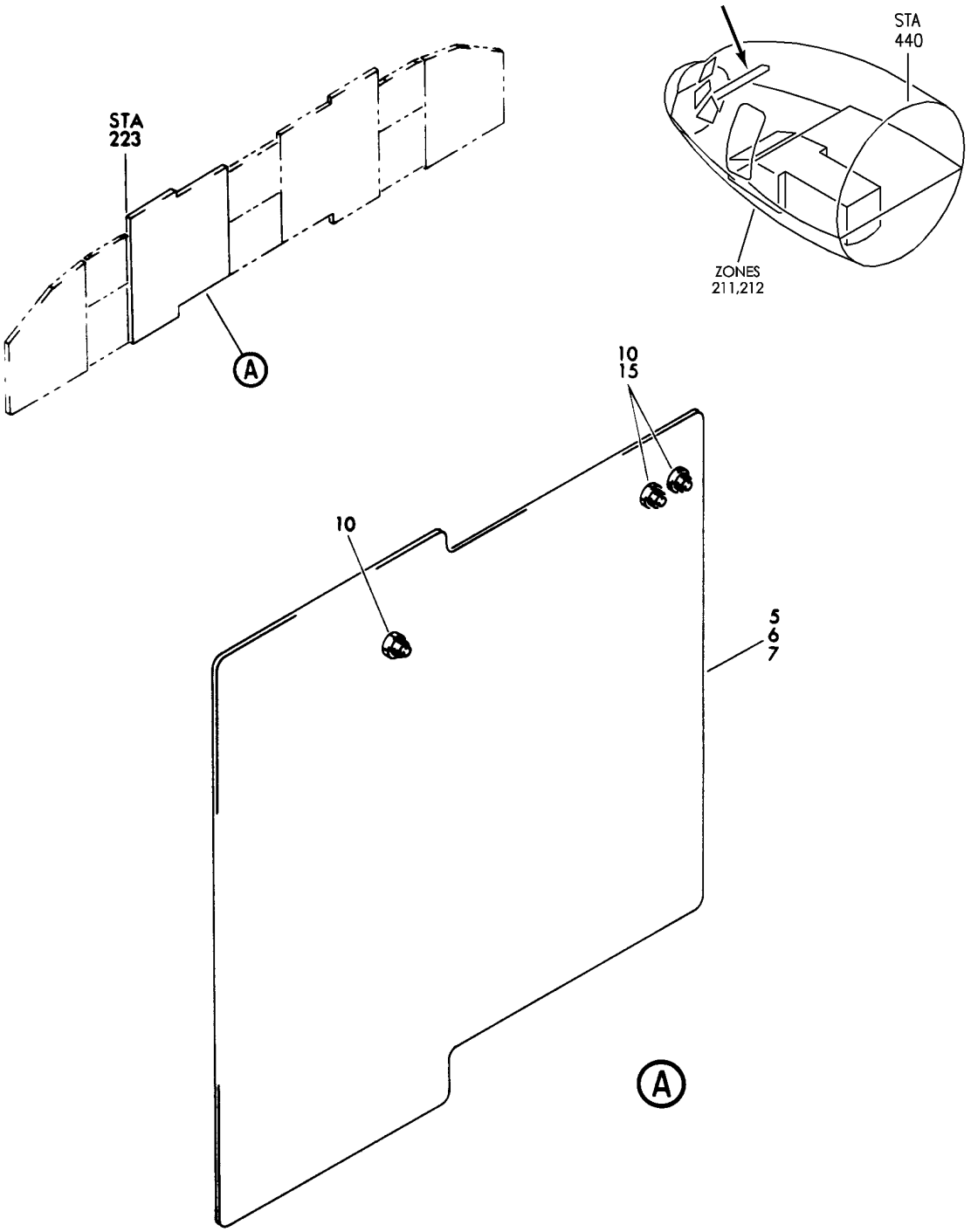

Y 31415201 SHT 1 REV 229

PANEL INSTL-CAPT AND FIRST OFFICER FWD (ENGINE INDICATION AND CREW ALERTING SYSTEM ONLY)
FIGURE 1

BOEING PROPRIETARY - Copyright © - Unpublished Work - See title page for details.

FIG ITEM	PART NUMBER	1 2 3 4 5 6 7 NOMENCLATURE	EFFECT FROM TO	UNITS PER ASSY
1				
		PANEL INSTL-CAPT AND FIRST	002004	
		OFFICER FWD (ENGINE	006010	
		INDICATION AND CREW	107107	
		ALERTING SYSTEM ONLY)	121503	
			904999	
- 1	233N2101-1	PANEL INSTL-CAPT AND FIRST	002004	RF
		OFFICER (ENGINE	006010	
		INDICATION AND CREW	107107	
		ALERTING SYSTEM ONLY)	121503	
		POSITION DATA:	904999	
		FWD		
		VARIABLE DRAWING REF:		
		233N2101-5003		
		233N2101-5004		
		233N2101-5037		
		233N2101-5039		
		233N2101-5041		
		FOR NHA/OTHER SYS DET SEE:		
		25-10-00-05A		
6	233N2221-51	.MODULE ASSY-P1-3	002004	RF
			006010	
			950999	
7	233N2221-59	.MODULE ASSY-P1-3	107107	RF
7	233N2221-62	.MODULE ASSY-P1-3	121503	RF
			904949	
15	2PB11T2	..SWITCH-PUSH BUTTON	002004	2
		SUPPLIER CODE:	006010	
		V91929	107107	
		ELECTRICAL EQUIP NUMBER:	121503	
		S10170	904999	
		S10230		

MISSING ITEM NUMBERS NOT APPLICABLE

- ITEM NOT ILLUSTRATED

BOEING PROPRIETARY - Copyright © - Unpublished Work - See title page for details.

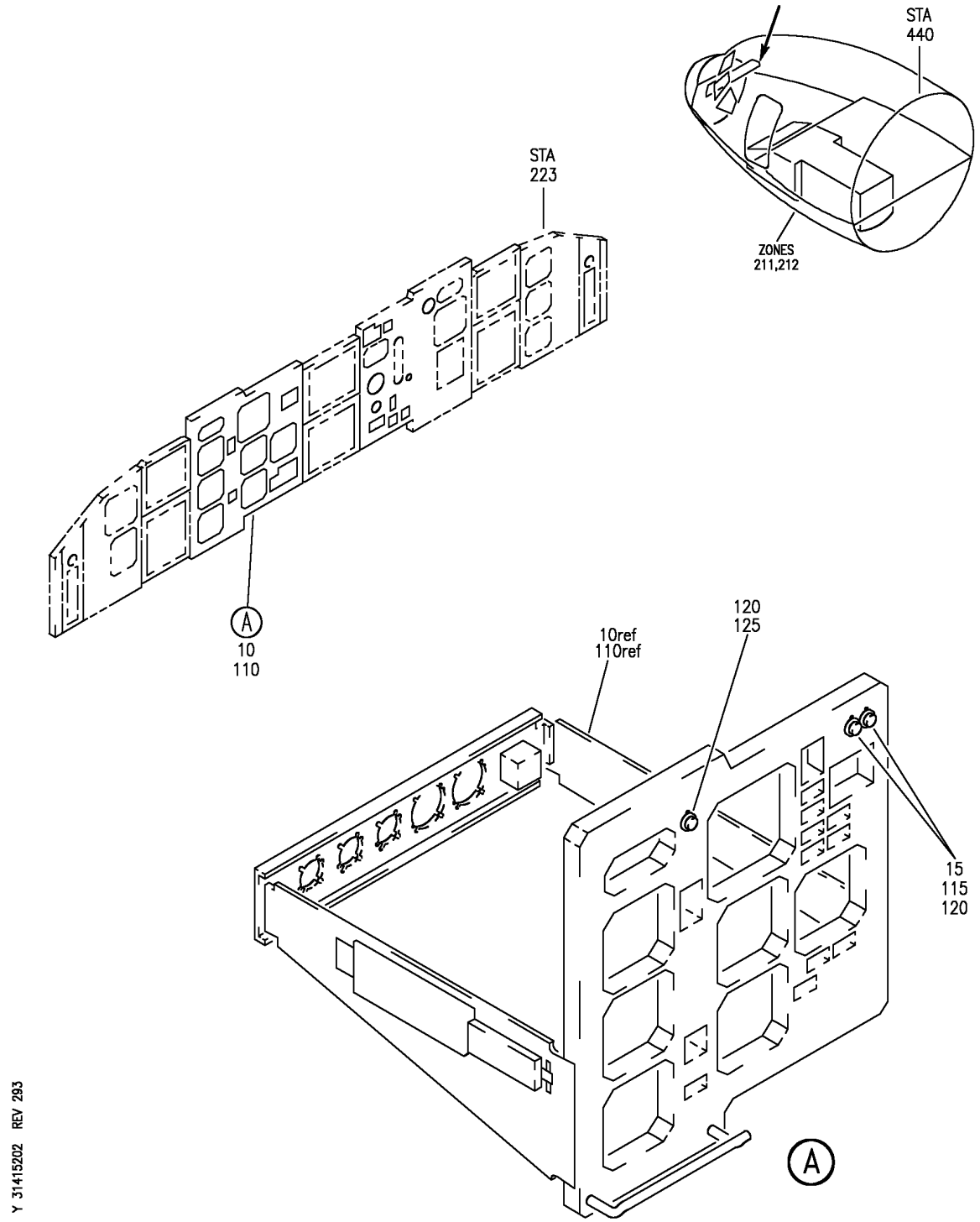

PANEL INSTL-CAPT AND FIRST OFFICER FWD AND P1-3 (ENGINE INDICATION AND CREW ALERTING SYSTEM ONLY)
FIGURE 2

BOEING PROPRIETARY - Copyright © - Unpublished Work - See title page for details.

FIG ITEM	PART NUMBER	1 2 3 4 5 6 7 NOMENCLATURE	EFFECT FROM TO	UNITS PER ASSY
2				
		PANEL INSTL-CAPT AND FIRST OFFICER FWD AND P1-3 (ENGINE INDICATION AND CREW ALERTING SYSTEM ONLY)	011106 108120 504903	
- 1	233N2101-1	PANEL INSTL-CAPT AND FIRST OFFICER (ENGINE INDICATION AND CREW ALERTING SYSTEM ONLY) POSITION DATA: FWD VARIABLE DRAWING REF: 233N2101-5039 FOR NHA/OTHER SYS DET SEE: 25-10-00-05A	011100	RF
- 5	233N2221-301	.MODULE ASSY-P1-3 COMPONENT MAINT MANUAL REF: 31-11-48	011100	RF
- 5	233N2221-317	.MODULE ASSY-P1-3 COMPONENT MAINT MANUAL REF: 31-11-48	504903	RF
10	233N2221-51	..MODULE ASSY-	011100	RF
10	233N2221-74	..MODULE ASSY-	504903	RF
15	2PB11T2	...SWITCH-PUSH BUTTON SUPPLIER CODE: V91929 ELECTRICAL EQUIP NUMBER: S10170 S10230	011100	2
- 100	233N2103-10	PANEL INSTL-P1-3 (ENGINE INDICATION AND CREW ALERTING SYSTEM ONLY) FOR NHA/OTHER SYS DET SEE: 25-10-00-15B	108120	RF
- 100	233N2103-72	PANEL INSTL-P1-3 (ENGINE INDICATION AND CREW ALERTING SYSTEM ONLY) FOR NHA/OTHER SYS DET SEE: 25-10-00-15B	101102	RF
- 100	233N2103-280	PANEL INSTL-P1-3 (ENGINE INDICATION AND CREW ALERTING SYSTEM ONLY) FOR NHA/OTHER SYS DET SEE: 25-10-00-15B	504903	RF

MISSING ITEM NUMBERS NOT APPLICABLE

- ITEM NOT ILLUSTRATED

BOEING PROPRIETARY - Copyright © - Unpublished Work - See title page for details.

FIG ITEM	PART NUMBER	1 2 3 4 5 6 7 NOMENCLATURE	EFFECT FROM TO	UNITS PER ASSY
2				
- 104	MODREF31741	PANEL INSTL-P1-3 (ENGINE INDICATION AND CREW ALERTING SYSTEM ONLY) MODULE NUMBER: 233N2103-425 REV A FOR OTHER SYS DETAILS SEE: 11-31-01-38 22-11-02-03 22-14-01-03 22-31-02-01 22-34-51-02 26-17-51-05 27-51-57-03 27-58-00-02 27-81-00-01 29-21-55-02 31-11-11-19 31-11-16-01 31-11-26-38 31-25-01-03 31-51-52-02 32-35-52-03 32-41-52-02 32-42-55-03 32-46-00-01 32-61-51-03 33-13-57-01A 33-16-52-03 34-12-01-03 34-13-01-03 34-13-02-01 34-13-05-01 34-13-06-01 34-16-51-03 34-21-02-02 34-22-02-02 34-22-05-01A 34-22-06-01 34-24-01-03 34-32-00-02 34-46-51-02 34-51-02-02 34-57-00-01 34-61-01-07 34-61-02-02 77-41-01-01 79-33-51-05	103105	1

MISSING ITEM NUMBERS NOT APPLICABLE

– ITEM NOT ILLUSTRATED

BOEING PROPRIETARY - Copyright © - Unpublished Work - See title page for details.

FIG ITEM	PART NUMBER	1 2 3 4 5 6 7 NOMENCLATURE	EFFECT FROM TO	UNITS PER ASSY
2				
- 104	MODREF104335	PANEL INSTL-P1-3 (ENGINE INDICATION AND CREW ALERTING SYSTEM ONLY) MODULE NUMBER: 233N2103-425 REV B FOR OTHER SYS DETAILS SEE: 11-31-01-38 22-11-02-03 22-14-01-03 22-31-02-01 22-34-51-02 26-17-51-05 27-51-57-03 27-58-00-02 27-81-00-01 29-21-55-02 31-11-11-19 31-11-16-01 31-11-26-38 31-25-01-03 31-51-52-02 32-35-52-03 32-41-52-02 32-42-55-03 32-46-00-01 32-61-51-03 33-13-57-01A 33-16-52-03 34-12-01-03 34-13-01-03 34-13-02-01 34-13-05-01 34-13-06-01 34-16-51-03 34-21-02-02 34-22-02-02 34-22-05-01A 34-22-06-01 34-24-01-03 34-32-00-02 34-46-51-02 34-51-02-02 34-57-00-01 34-61-01-07 34-61-02-02 77-41-01-01 79-33-51-05	106106	1

MISSING ITEM NUMBERS NOT APPLICABLE

- ITEM NOT ILLUSTRATED

BOEING PROPRIETARY - Copyright © - Unpublished Work - See title page for details.

FIG ITEM	PART NUMBER	1 2 3 4 5 6 7 NOMENCLATURE	EFFECT FROM TO	UNITS PER ASSY
2				
- 105	233N2221-301	.MODULE ASSY- COMPONENT MAINT MANUAL REF: 31-11-48	101102 108120	RF
- 105	233N2221-317	.MODULE ASSY- COMPONENT MAINT MANUAL REF: 31-11-48	505505 507903	RF
- 105	RR92002-134A101	.MODULE ASSY- POST RAPID REVISION: RR92002-134A	504504 506506	RF
- 105	233N2221-320	.MODULE ASSY- COMPONENT MAINT MANUAL REF: 31-11-48	101102 108120	RF
- 105	233N2221-325	.MODULE ASSY- COMPONENT MAINT MANUAL REF: 31-11-48	103106	RF
- 105	233N2221-326	.MODULE ASSY- COMPONENT MAINT MANUAL REF: 31-11-48	101102 108120	RF
- 106	233N2221-328	.MODULE ASSY- COMPONENT MAINT MANUAL REF: 31-11-48	101102 108120	RF
110	233N2221-51	..MODULE ASSY- USED ON: 233N2221-301	101102 108120	RF
110	233N2221-74	..MODULE ASSY	504903	RF
110	233N2221-81	..MODULE ASSY- USED ON: 233N2221-320 233N2221-326 233N2221-328	101106 108120	RF
115	2PB11T2	...SWITCH-PUSH BUTTON SUPPLIER CODE: V91929	101106 108120 504903	2

MISSING ITEM NUMBERS NOT APPLICABLE

- ITEM NOT ILLUSTRATED

BOEING PROPRIETARY - Copyright © - Unpublished Work - See title page for details.

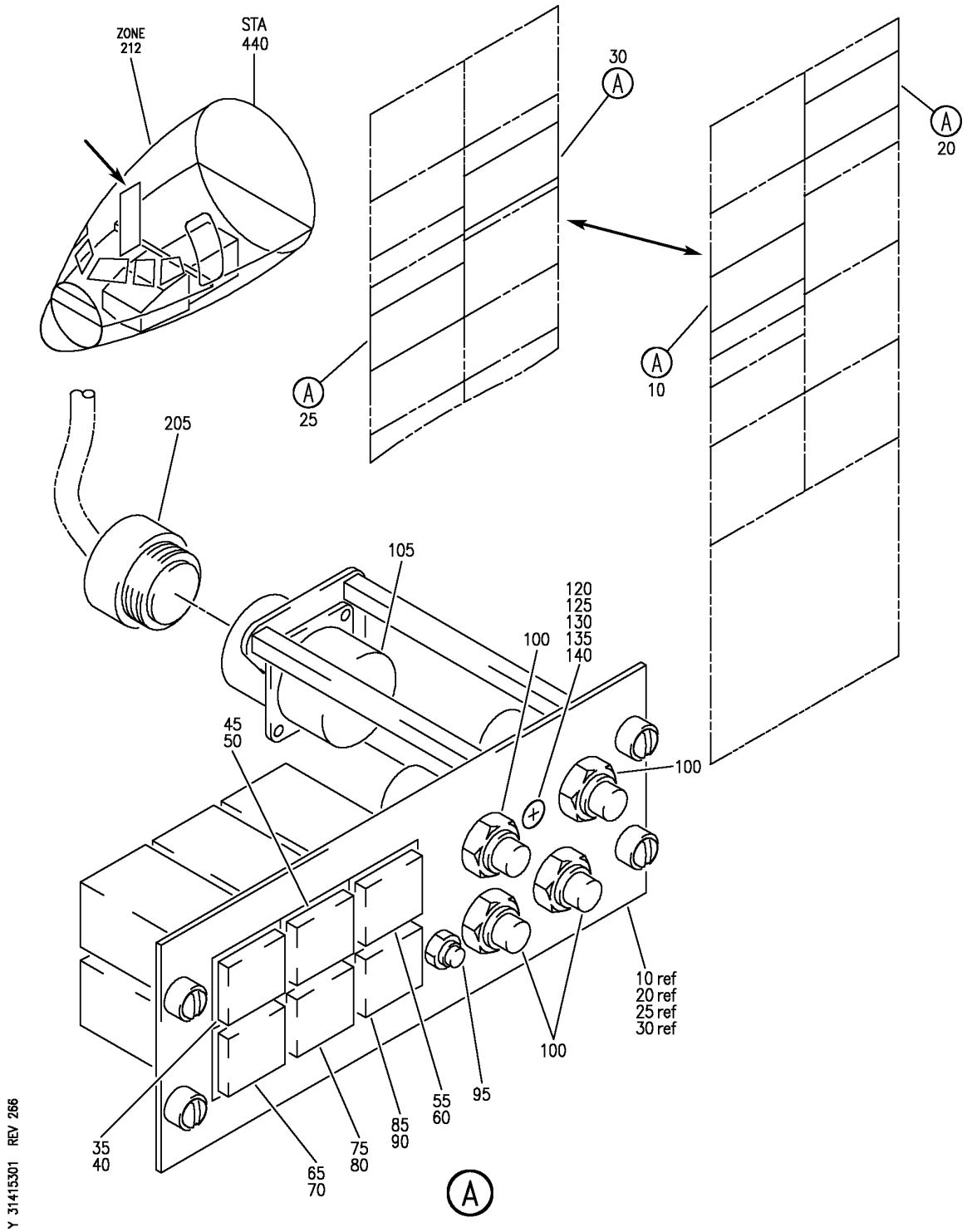

PANEL INSTL-P61 R SIDEWALL (ENGINE INDICATION AND CREW ALERTING SYSTEM ONLY)
FIGURE 1

BOEING PROPRIETARY - Copyright © - Unpublished Work - See title page for details.

FIG ITEM	PART NUMBER	1 2 3 4 5 6 7 NOMENCLATURE	EFFECT FROM TO	UNITS PER ASSY
1		PANEL INSTL-P61 R SIDEWALL (ENGINE INDICATION AND CREW ALERTING SYSTEM ONLY)	002004 006999	
- 1	233N7401-1	PANEL INSTL-P61 SIDEWALL (ENGINE INDICATION AND CREW ALERTING SYSTEM ONLY) POSITION DATA: R VARIABLE DRAWING REF: 233N7401-5004 233N7401-5005 233N7401-5036 233N7401-5038 233N7401-5042 FOR NHA/OTHER SYS DET SEE: 25-10-00-05A	002004 006100 107107 121503 904999	RF
- 1	233N7403-158	PANEL INSTL-P61 SIDEWALL (ENGINE INDICATION AND CREW ALERTING SYSTEM ONLY) POSITION DATA: R FOR NHA/OTHER SYS DET SEE: 25-10-00-15B	108120	RF
- 3	233N7403-28	PANEL INSTL-P61 SIDEWALL (ENGINE INDICATION AND CREW ALERTING SYSTEM ONLY) POSITION DATA: R FOR NHA/OTHER SYS DET SEE: 25-10-00-15B	101101	RF
- 4	233N7403-117	PANEL INSTL-P61 SIDEWALL (ENGINE INDICATION AND CREW ALERTING SYSTEM ONLY) POSITION DATA: R FOR NHA/OTHER SYS DET SEE: 25-10-00-15B	504903	RF

MISSING ITEM NUMBERS NOT APPLICABLE

- ITEM NOT ILLUSTRATED

BOEING PROPRIETARY - Copyright © - Unpublished Work - See title page for details.

FIG ITEM	PART NUMBER	1 2 3 4 5 6 7 NOMENCLATURE	EFFECT FROM TO	UNITS PER ASSY
1				
- 4	233N7403-128	PANEL INSTL-P61 SIDEWALL (ENGINE INDICATION AND CREW ALERTING SYSTEM ONLY) POSITION DATA: R FOR NHA/OTHER SYS DET SEE: 25-10-00-15B	102102	RF
- 8	MODREF33342	PANEL INSTL- (ENGINE INDICATION AND CREW ALERTING SYSTEM ONLY) MODULE NUMBER: 233N7403-171 REV A FOR OTHER SYS DETAILS SEE: 11-32-01-98 21-58-51-04 22-21-51-01 23-41-52-01 24-22-73-02 26-18-53-02 26-21-52-01 26-22-52-01 26-23-52-03 27-23-51-02 28-41-51-04 29-22-52-01 30-11-52-01 30-41-51-04 31-14-16-87 31-31-04-01 31-51-51-01 34-12-54-01 34-21-51-02 34-46-51-05 34-61-53-03	103106	1
10	233N7509-1	.PANEL ASSY-EICAS MAINT SUPPLIER CODE: V89954 ELECTRICAL EQUIP NUMBER: M10372 COMPONENT MAINT MANUAL REF: 31-41-54	002004 006100 107107 121503 904999	RF

MISSING ITEM NUMBERS NOT APPLICABLE

- ITEM NOT ILLUSTRATED

BOEING PROPRIETARY - Copyright © - Unpublished Work - See title page for details.

FIG ITEM	PART NUMBER	1 2 3 4 5 6 7 NOMENCLATURE	EFFECT FROM TO	UNITS PER ASSY
1				
10	233N7509-1	.PANEL ASSY-EICAS MAINT SUPPLIER CODE: V89954 ELECTRICAL EQUIP NUMBER: M10372 COMPONENT MAINT MANUAL REF: 31-41-54	101106 108120 504903	RF
35	2100-14	..SWITCH ASSY-PUSH BUTTON ECS/MSG SUPPLIER CODE: V91929	002004 006999	1
40	2100-111	...CAP- SUPPLIER CODE: V91929 USED ON: 2100-14	002004 006999	1
- 43	85	...BULB- SUPPLIER CODE: V08805 USED ON: 2100-14	002004 006999	1
45	2100-15	..SWITCH ASSY-PUSH BUTTON ELEC/HYD SUPPLIER CODE: V91929	002004 006999	1
50	2100-112	...CAP- SUPPLIER CODE: V91929	002004 006999	1
- 53	85	...BULB- SUPPLIER CODE: V08805	002004 006999	1
55	2100-16	..SWITCH ASSY-PUSH BUTTON PERF/APU SUPPLIER CODE: V91929	002004 006999	1
60	2100-113	...CAP- SUPPLIER CODE: V91929	002004 006999	1
- 63	85	...BULB- SUPPLIER CODE: V08805	002004 006999	1
65	2100-17	..SWITCH ASSY-PUSH BUTTON CONF/MCDP SUPPLIER CODE: V91929	002004 006999	1
70	2100-114	...CAP- SUPPLIER CODE: V91929	002004 006999	1

MISSING ITEM NUMBERS NOT APPLICABLE

- ITEM NOT ILLUSTRATED

BOEING PROPRIETARY - Copyright © - Unpublished Work - See title page for details.

FIG ITEM	PART NUMBER	1 2 3 4 5 6 7 NOMENCLATURE	EFFECT FROM TO	UNITS PER ASSY
1				
- 73	85	...BULB-	002004	1
		SUPPLIER CODE:	006999	
		V08805		
75	2100-18	..SWITCH ASSY-PUSH BUTTON	002004	1
		ENG EXCD	006999	
		SUPPLIER CODE:		
		V91929		
80	2100-115	...CAP-	002004	1
		SUPPLIER CODE:	006999	
		V91929		
- 83	85	...BULB-	002004	1
		SUPPLIER CODE:	006999	
		V08805		
95	1PB5	..SWITCH-PUSH BUTTON	002004	1
		SUPPLIER CODE:	006999	
		V91929		
100	2PB11T2	..SWITCH-PUSH BUTTON	002004	4
		SUPPLIER CODE:	006999	
		V91929		
105	BACC45FN20-41P8	..CONNECTOR	002004	1
			006999	
		ATTACHING PARTS		
- 110	BACS12HN04-5	..SCREW-	002004	3
			006999	
- 115	K19798-04	..NUT	002004	3
		SUPPLIER CODE:	006999	
		V15653		
		SPECIFICATION NUMBER:		
		BACN10NW1		
		OPTIONAL PART:		
		RMA4812-160-40		
		V72962		
		293162		
		V60119		
		-------*-------		
120	NAS514P1032-10	..SCREW	002004	1
			006999	
125	AN960D416	..WASHER-	002004	1
		OPTIONAL PART:	006999	
		NAS1149D0463H		
125	NAS1149D0463H	..WASHER-	002004	1
		OPTIONAL PART:	006999	
		AN960D416		
		AN960D10L		
125	AN960D10L	..WASHER-	002004	1
		OPTIONAL PART:	006999	
		NAS1149D0463H		
130	MS35650-305T	..NUT	002004	1
			006999	

MISSING ITEM NUMBERS NOT APPLICABLE

- ITEM NOT ILLUSTRATED

BOEING PROPRIETARY - Copyright © - Unpublished Work - See title page for details.

FIG ITEM	PART NUMBER	1 2 3 4 5 6 7 NOMENCLATURE	EFFECT FROM TO	UNITS PER ASSY
1				
135	BACN10JC3M	..NUT-	002004 006999	1
140	2-36153-4	..TERMINAL SUPPLIER CODE: V00779 SPECIFICATION NUMBER: BACT12AR204	002004 006999	1
- 200	286N2315-002	WIRE BUNDLE ASSY	121503 904949	RF
- 200	286N2315-007	WIRE BUNDLE ASSY	107107	RF
- 200	286N2315-009	WIRE BUNDLE ASSY	002004 006010 950999	RF
- 200	286N2315-301	WIRE BUNDLE ASSY	108120	RF
- 201	286N2315-016	WIRE BUNDLE ASSY	011100	RF
- 201	286N2315-019	WIRE BUNDLE ASSY	504903	RF
- 201	286N2315-307	WIRE BUNDLE ASSY	101102	RF
- 201	286N2315-701	WIRE BUNDLE ASSY	103106	RF
205	BACC45FT20A41S8	.CONNECTOR- ELECTRICAL EQUIP NUMBER: D00517 WIRING DIAGRAM REF: 314119	002004 006999	1

MISSING ITEM NUMBERS NOT APPLICABLE

- ITEM NOT ILLUSTRATED

BOEING PROPRIETARY - Copyright © - Unpublished Work - See title page for details.

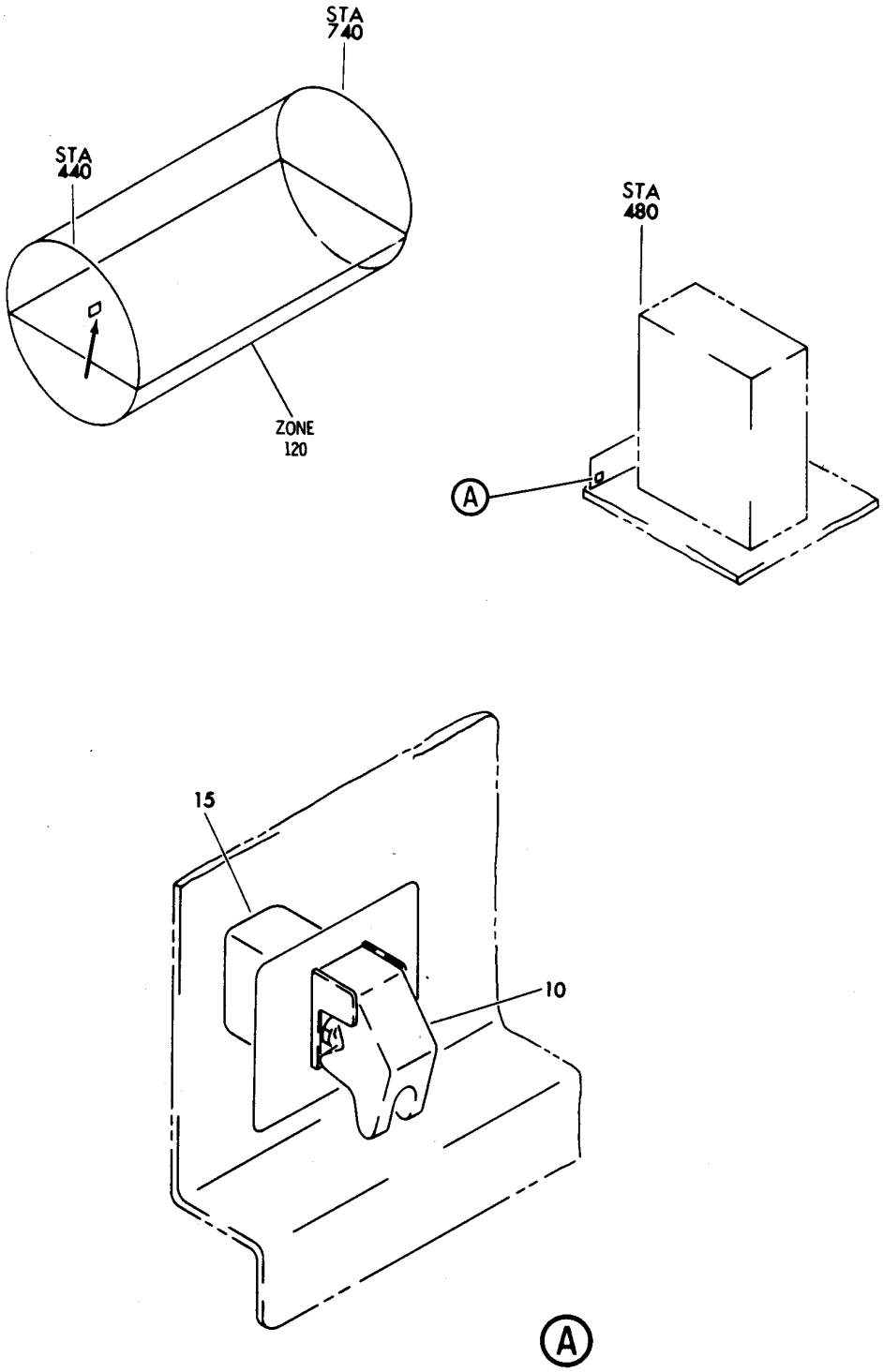

Y 31415401 SMT 1 REV 028

PANEL INSTL-EQPT CTR SVCE (INSTRUMENTS ONLY)
FIGURE 1

BOEING PROPRIETARY - Copyright © - Unpublished Work - See title page for details.

FIG ITEM	PART NUMBER	1 2 3 4 5 6 7 NOMENCLATURE	EFFECT FROM TO	UNITS PER ASSY
1				
		PANEL INSTL-EQPT CTR	101106	
		SVCE (INSTRUMENTS ONLY)	108120	
			504903	
- 1	284N1360-39	PANEL INSTL-EQPT CTR	101102	RF
		SVCE (INSTRUMENTS ONLY)	108120	
		FOR NHA/OTHER SYS DET SEE:	504903	
		24-00-58-05C		
- 1	MODREF10009	PANEL INSTL-EQPT CTR	103106	1
		SVCE (INSTRUMENTS ONLY)		
		MODULE NUMBER:		
		284N1360-39 REV A		
		FOR OTHER SYS DETAILS SEE:		
		11-36-51-01		
10	405-112	.GUARD-SWITCH	101106	1
		SUPPLIER CODE:	108120	
		V33463	504903	
15	1TL187-3	.SWITCH-	101106	1
		SUPPLIER CODE:	108120	
		V91929	504903	
		ELECTRICAL EQUIP NUMBER:		
		S10446		

MISSING ITEM NUMBERS NOT APPLICABLE

- ITEM NOT ILLUSTRATED

BOEING PROPRIETARY - Copyright © - Unpublished Work - See title page for details.

WARNING ELECTRONIC SYSTEM (WES)

BOEING PROPRIETARY - Copyright © - Unpublished Work - See title page for details.

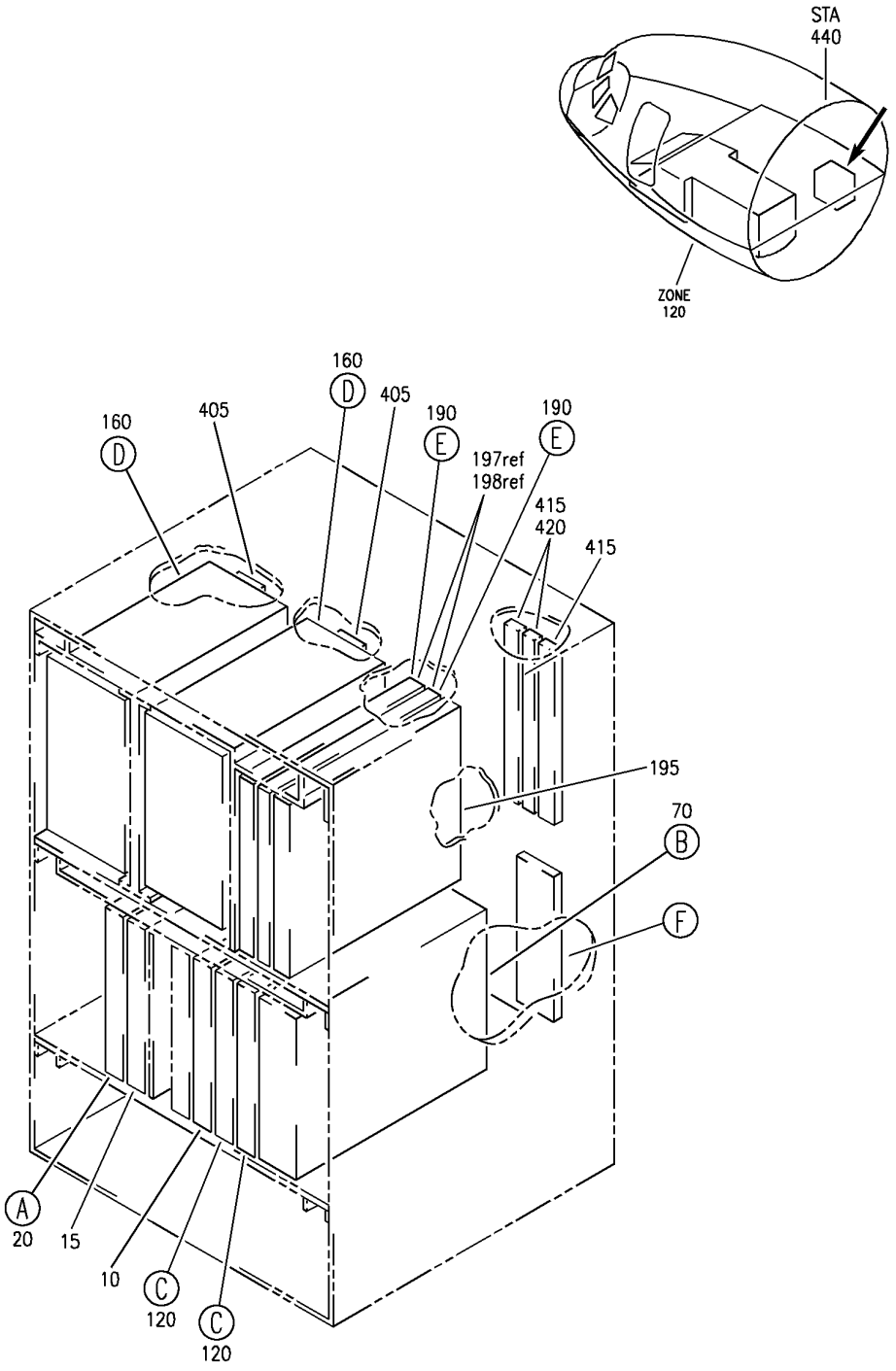

EQUIPMENT INSTL-MAIN ELECTRONICS EQPT CTR (WARNING SYSTEM ONLY)
FIGURE 1 (SHEET 1)

BOEING PROPRIETARY - Copyright © - Unpublished Work - See title page for details.

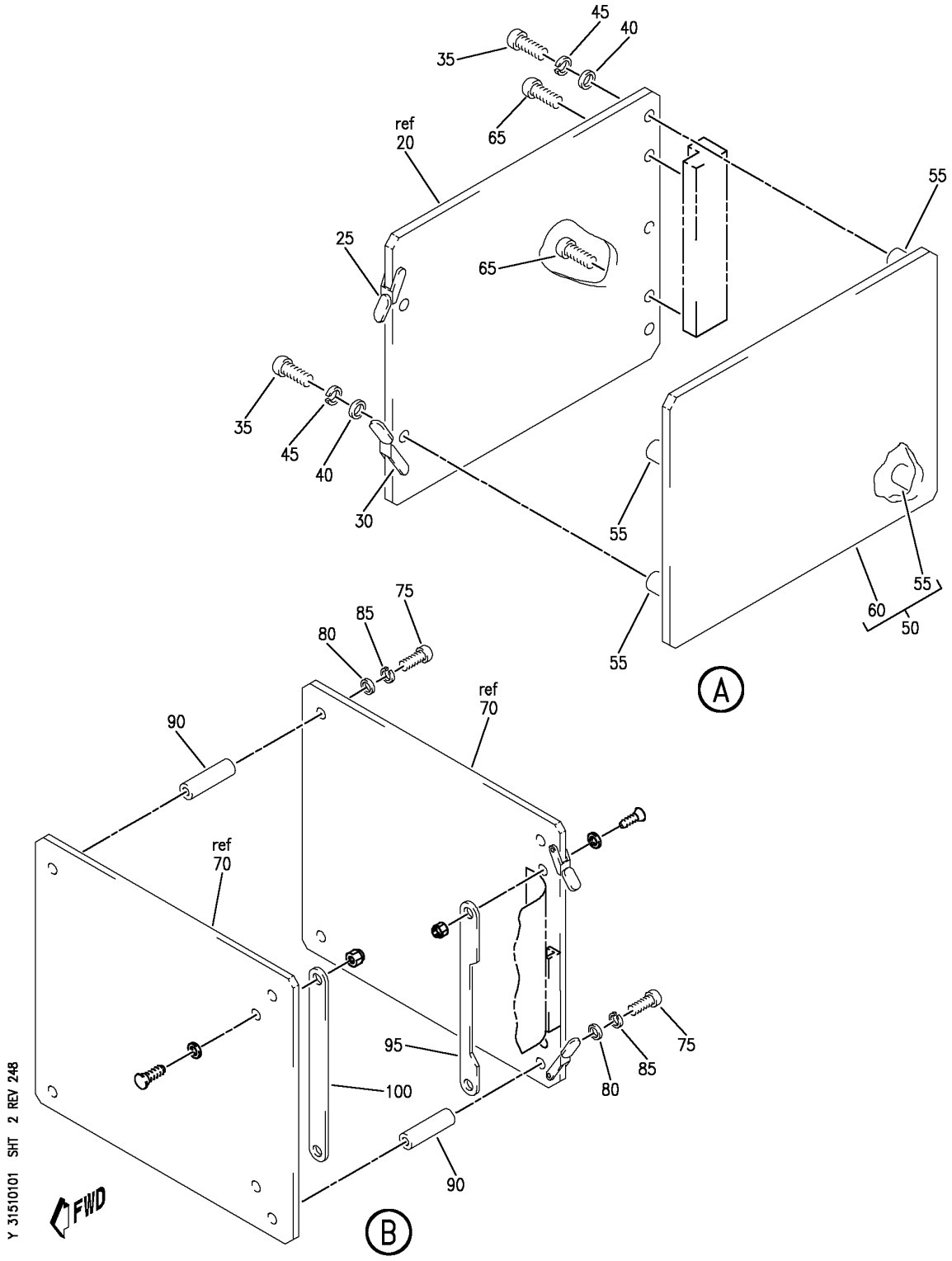

EQUIPMENT INSTL-MAIN ELECTRONICS EQPT CTR (WARNING SYSTEM ONLY)
FIGURE 1 (SHEET 2)

BOEING PROPRIETARY - Copyright © - Unpublished Work - See title page for details.

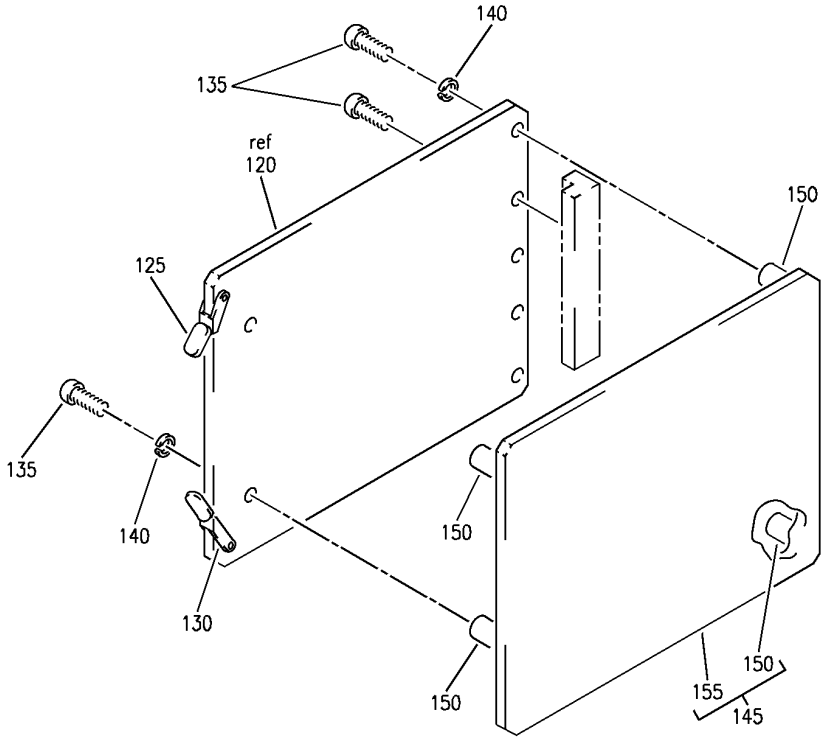

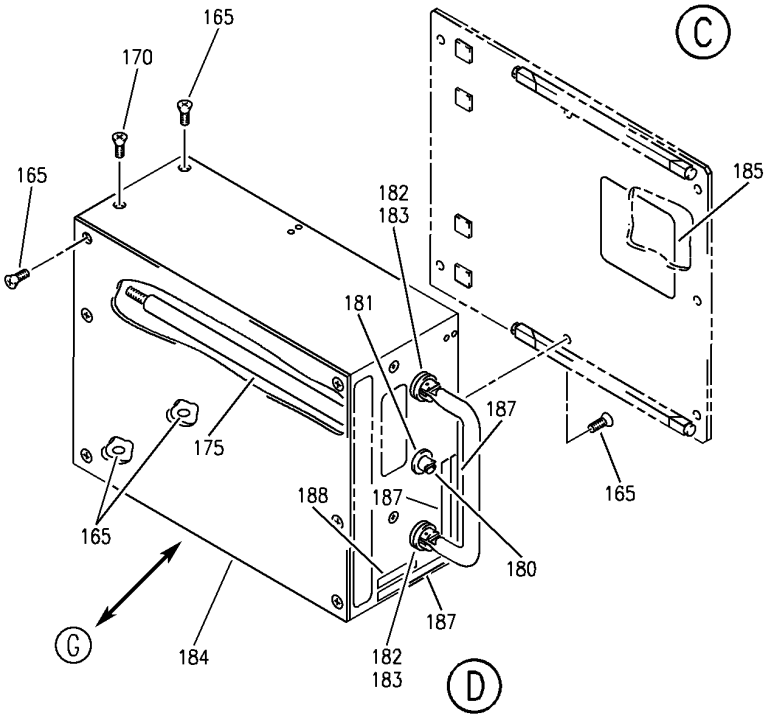

Y 31510101 SHT 3 REV 305

EQUIPMENT INSTL-MAIN ELECTRONICS EQPT CTR (WARNING SYSTEM ONLY)
FIGURE 1 (SHEET 3)

BOEING PROPRIETARY - Copyright © - Unpublished Work - See title page for details.

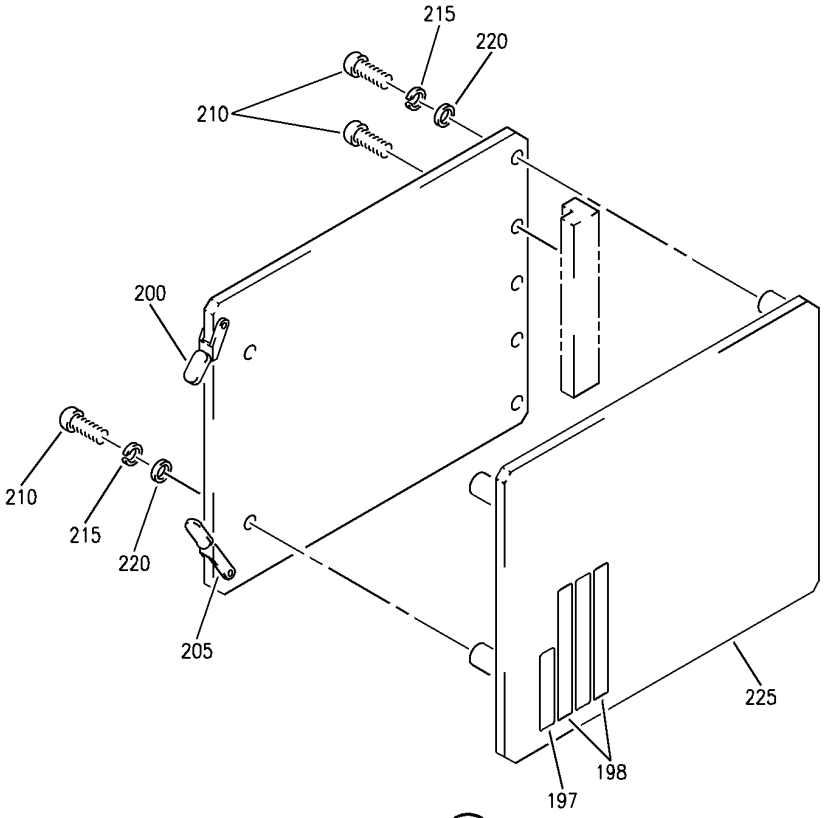

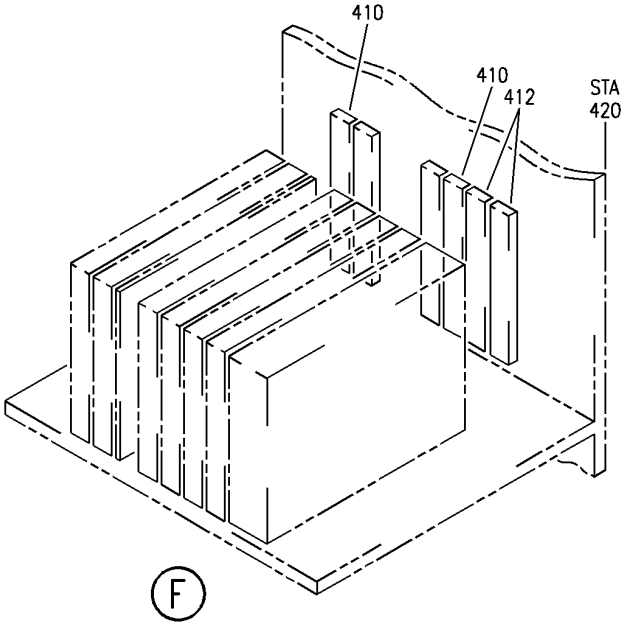

Y 31510101 SHT 4 REV 283

EQUIPMENT INSTL-MAIN ELECTRONICS EQPT CTR (WARNING SYSTEM ONLY)
FIGURE 1 (SHEET 4)

BOEING PROPRIETARY - Copyright © - Unpublished Work - See title page for details.

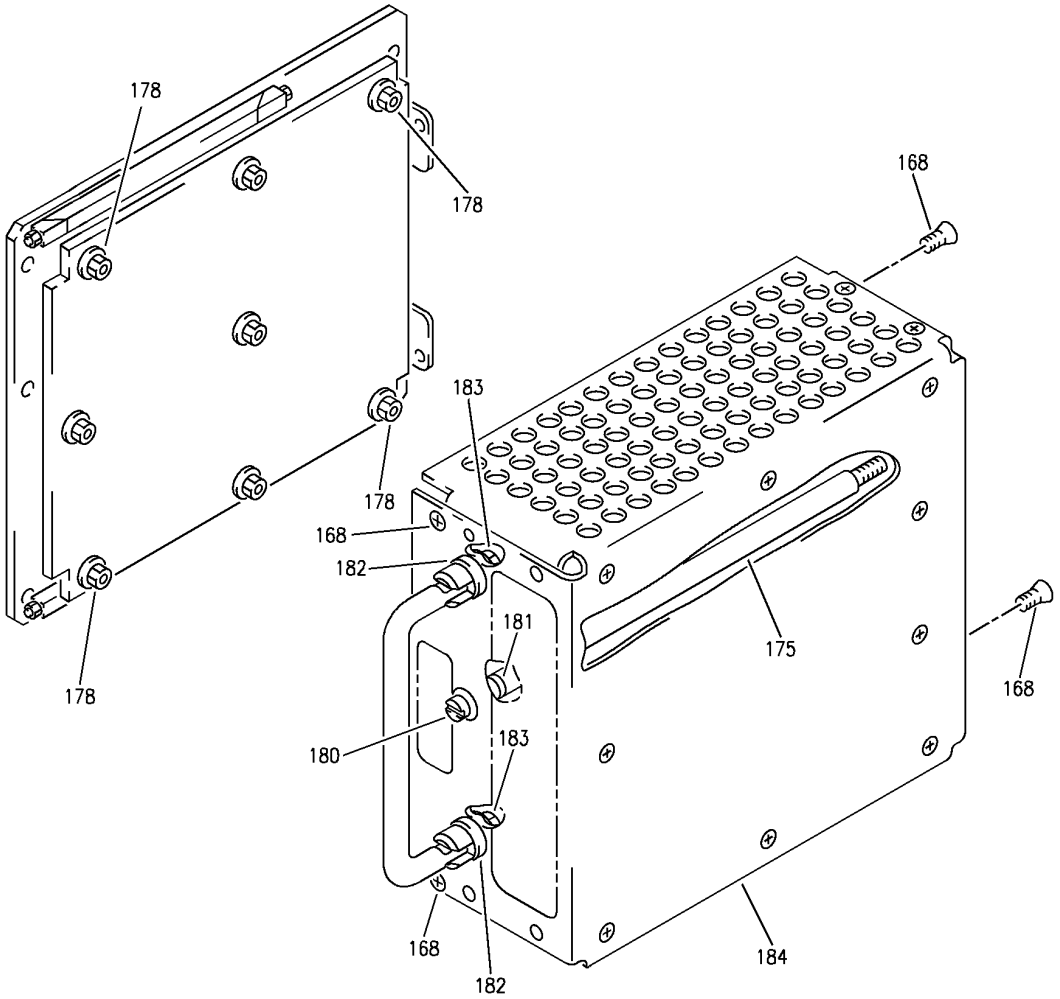

G

Y 31510101 SHT 5 REV 305

EQUIPMENT INSTL-MAIN ELECTRONICS EQPT CTR (WARNING SYSTEM ONLY)
FIGURE 1 (SHEET 5)

BOEING PROPRIETARY - Copyright © - Unpublished Work - See title page for details.

FIG ITEM	PART NUMBER	1 2 3 4 5 6 7 NOMENCLATURE	EFFECT FROM TO	UNITS PER ASSY
1		EQUIPMENT INSTL-MAIN ELECTRONICS EQPT CTR (WARNING SYSTEM ONLY)	002004 006100 107107 121503 904999	
- 2	284N1307-33	EQUIPMENT INSTL-MAIN ELECTRONICS EQPT CTR (WARNING SYSTEM ONLY) FOR NHA/OTHER SYS DET SEE: 24-00-58-01	107107	RF
- 2	284N1800-32	EQUIPMENT INSTL-MAIN ELECTRONICS EQPT CTR (WARNING SYSTEM ONLY) FOR NHA/OTHER SYS DET SEE: 24-00-58-01	952999	RF
- 4	284N1800-16	EQUIPMENT INSTL-MAIN ELECTRONICS EQPT CTR (WARNING SYSTEM ONLY) FOR NHA/OTHER SYS DET SEE: 24-00-58-01	121503 904949	RF
- 5	284N1800-34	EQUIPMENT INSTL-MAIN ELECTRONICS EQPT CTR (WARNING SYSTEM ONLY) FOR NHA/OTHER SYS DET SEE: 24-00-58-01	002004 006100	RF
- 5	284N1800-38	EQUIPMENT INSTL-MAIN ELECTRONICS EQPT CTR (WARNING SYSTEM ONLY) FOR NHA/OTHER SYS DET SEE: 24-00-58-01	950951	RF
10	285T0032-19	.PRINTED CIRCUIT ASSY- MASTER WARNING SUPPLIER CODE: V89954 ELECTRICAL EQUIP NUMBER: M00618 COMPONENT MAINT MANUAL REF: 31-51-13 QUALIFIED I/W DATA: 285T0032-15 -17 -19 ARE ALL I/W UNTIL ACTIVATION OF WINDSHEAR SYS AT WHICH TIME -19 MUST BE INSTALLED	002004 006100 107107 121503 904999	1

MISSING ITEM NUMBERS NOT APPLICABLE

- ITEM NOT ILLUSTRATED

BOEING PROPRIETARY - Copyright © - Unpublished Work - See title page for details.

FIG ITEM	PART NUMBER	1 2 3 4 5 6 7 NOMENCLATURE	EFFECT FROM TO	UNITS PER ASSY
1				
15	285T0031-16	.PRINTED CIRCUIT ASSY- LDG CONFIGURATION WARNING ELECTRONICS UNIT SUPPLIER CODE: V89954 ELECTRICAL EQUIP NUMBER: M00983 COMPONENT MAINT MANUAL REF: 31-51-12 OPTIONAL PART: 285T0031-17 V89954	002004 006100 107107 121503 904999	1
15	285T0031-17	.PRINTED CIRCUIT ASSY- LDG CONFIGURATION WARNING ELECTRONICS UNIT SUPPLIER CODE: V89954 ELECTRICAL EQUIP NUMBER: M00983 COMPONENT MAINT MANUAL REF: 31-51-12 OPTIONAL PART: 285T0031-16 V89954	002004 006100 107107 121503 904999	1
20	285T0259-9	.PRINTED CIRCUIT ASSY- TAKEOFF CONFIGURATION SUPPLIER CODE: V89954 ELECTRICAL EQUIP NUMBER: M00620 COMPONENT MAINT MANUAL REF: 31-51-11	002004 006100 107107 121503 904999	1
20	285T0259-7	.PRINTED CIRCUIT ASSY- TAKEOFF CONFIGURATION SUPPLIER CODE: V89954 ELECTRICAL EQUIP NUMBER: M00620 COMPONENT MAINT MANUAL REF: 31-51-11	002004 006100 107107 121503 904999	1
20	285T0259-12	.PRINTED CIRCUIT ASSY- TAKEOFF CONFIGURATION SUPPLIER CODE: V89954 ELECTRICAL EQUIP NUMBER: M00620 COMPONENT MAINT MANUAL REF: 31-51-11	002004 006100 107107 121503 904999	1

MISSING ITEM NUMBERS NOT APPLICABLE

– ITEM NOT ILLUSTRATED

BOEING PROPRIETARY - Copyright © - Unpublished Work - See title page for details.

FIG ITEM	PART NUMBER	1 2 3 4 5 6 7 NOMENCLATURE	EFFECT FROM TO	UNITS PER ASSY
1				
20	285T0259-13	.PRINTED CIRCUIT ASSY- TAKEOFF CONFIGURATION SUPPLIER CODE: V89954 ELECTRICAL EQUIP NUMBER: M00620 COMPONENT MAINT MANUAL REF: 31-51-11	002004 006100 107107 121503 904999	1
20	285T0259-14	.PRINTED CIRCUIT ASSY- TAKEOFF CONFIGURATION SUPPLIER CODE: V89954 ELECTRICAL EQUIP NUMBER: M00620 COMPONENT MAINT MANUAL REF: 31-51-11 OPTIONAL PART: 285T0259-13 V89954	002004 006100 107107 121503 904999	1
20	285T0259-16	.PRINTED CIRCUIT ASSY- TAKEOFF CONFIGURATION SUPPLIER CODE: V89954 ELECTRICAL EQUIP NUMBER: M00620 COMPONENT MAINT MANUAL REF: 31-51-11 OPTIONAL PART: 285T0259-17 V89954	002004 006100 107107 121503 904999	1
20	285T0259-17	.PRINTED CIRCUIT ASSY- TAKEOFF CONFIGURATION SUPPLIER CODE: V89954 ELECTRICAL EQUIP NUMBER: M00620 COMPONENT MAINT MANUAL REF: 31-51-11	002004 006100 107107 121503 904999	1
20	285T0259-18	.PRINTED CIRCUIT ASSY- TAKEOFF CONFIGURATION SUPPLIER CODE: V89954 ELECTRICAL EQUIP NUMBER: M00620	002004 006100 107107 121503 904999	1

MISSING ITEM NUMBERS NOT APPLICABLE

– ITEM NOT ILLUSTRATED

BOEING PROPRIETARY - Copyright © - Unpublished Work - See title page for details.

FIG ITEM	PART NUMBER	1 2 3 4 5 6 7 NOMENCLATURE	EFFECT FROM TO	UNITS PER ASSY
1				
20	285T0259-19	.PRINTED CIRCUIT ASSY- TAKEOFF CONFIGURATION SUPPLIER CODE: V89954 MISCELLANEOUS DATA: 285T0259-19, -20 AND -21 ARE ALL INTERCHANGEABLE ELECTRICAL EQUIP NUMBER: M00620 COMPONENT MAINT MANUAL REF: 31-51-11	002004 006100 107107 121503 904999	1
20	285T0259-20	.PRINTED CIRCUIT ASSY- TAKEOFF CONFIGURATION SUPPLIER CODE: V89954 MISCELLANEOUS DATA: 285T0259-19, -20 AND -21 ARE ALL INTERCHANGEABLE ELECTRICAL EQUIP NUMBER: M00620	002004 006100 107107 121503 904999	1
R R R R R R R R R R 20	285T0259-21	.PRINTED CIRCUIT ASSY- TAKEOFF CONFIGURATION SUPPLIER CODE: V89954 MISCELLANEOUS DATA: 285T0259-19, -20 AND -21 ARE ALL INTERCHANGEABLE ELECTRICAL EQUIP NUMBER: M00620	002004 006100 107107 121503 904999	1
25	71-2LA	..EXTRACTOR- SUPPLIER CODE: V18915	002004 006100 107107 121503 904999	1
25	71-2LA	..EXTRACTOR- SUPPLIER CODE: V18915	002004 006100 107107 121503 904999	1
30	71-2RA	..EXTRACTOR- SUPPLIER CODE: V18915	002004 006100 107107 121503 904999	1

MISSING ITEM NUMBERS NOT APPLICABLE

– ITEM NOT ILLUSTRATED

BOEING PROPRIETARY - Copyright © - Unpublished Work - See title page for details.

FIG ITEM	PART NUMBER	1 2 3 4 5 6 7 NOMENCLATURE	EFFECT FROM TO	UNITS PER ASSY
1				
30	71-2RA	..EXTRACTOR- SUPPLIER CODE: V18915	002004 006100 107107 121503 904999	1
35	MS35214-14	..SCREW	002004 006100 107107 121503 904999	4
35	MS35214-14	..SCREW	002004 006100 107107 121503 904999	4
40	AN960PD4	..WASHER	002004 006100 107107 121503 904999	4
40	AN960PD4	..WASHER	002004 006100 107107 121503 904999	4
45	MS35338-135	..WASHER- USED ON: 285T0032-15	002004 006100 107107 121503 904999	4
50	285T0032-8	..COVER ASSY- SUPPLIER CODE: V89954	002004 006100 107107 121503 904999	1
55	9537AB0440-3	...STANDOFF- SUPPLIER CODE: V06540	002004 006100 107107 121503 904999	4
60	285T0032-7	...COVER-PROTECTIVE SUPPLIER CODE: V89954	002004 006100 107107 121503 904999	1

MISSING ITEM NUMBERS NOT APPLICABLE

– ITEM NOT ILLUSTRATED

BOEING PROPRIETARY - Copyright © - Unpublished Work - See title page for details.

FIG ITEM	PART NUMBER	1 2 3 4 5 6 7 NOMENCLATURE	EFFECT FROM TO	UNITS PER ASSY
1				
65	MS35214-14	..SCREW- USED ON: 285T0032-15	002004 006100 107107 121503 904999	3
70	285T0385-5	.MODULE ASSY-WARNING ELECTRONICS UNIT BELL CHIMES SUPPLIER CODE: V89954 ELECTRICAL EQUIP NUMBER: M01000 COMPONENT MAINT MANUAL REF: 31-51-10 QUALIFIED I/W DATA: 285T0385-6 IS FULLY INTERCHANGEABLE WITH 285T0385-5 PROVIDED THE CUSTOMERS AIRPLANES ARE NOT FLYING UNDER CAA OR JAA CERTIFICATION, IN WHICH CASE THE 285T0385-5 IS PROHIBITED. POST SERVICE BULLETIN: 31-0164R2	009009 107107 952952	1
70	285T0385-6	.MODULE ASSY-WARNING ELECTRONICS UNIT BELL CHIMES SUPPLIER CODE: V89954 ELECTRICAL EQUIP NUMBER: M01000 COMPONENT MAINT MANUAL REF: 31-51-10 QUALIFIED I/W DATA: 285T0385-6 IS FULLY INTERCHANGEABLE WITH 285T0385-5 PROVIDED THE CUSTOMERS AIRPLANES ARE NOT FLYING UNDER CAA OR JAA CERTIFICATION, IN WHICH CASE THE 285T0385-5 IS PROHIBITED. POST SERVICE BULLETIN: 31-0127 PRE SERVICE BULLETIN: 31-0164R2	002004 006100 107107 121503 904951 953999	1

MISSING ITEM NUMBERS NOT APPLICABLE

— ITEM NOT ILLUSTRATED

BOEING PROPRIETARY - Copyright © - Unpublished Work - See title page for details.

FIG ITEM	PART NUMBER	1 2 3 4 5 6 7 NOMENCLATURE	EFFECT FROM TO	UNITS PER ASSY
1				
75	NAS1801-06-6	..SCREW	002004 006100 107107 121503 904999	8
80	AN960D6L	..WASHER- SERVICE BULLETIN OPT DATA: NAS1149DN616H	002004 006100 107107 121503 904999	8
80	NAS1149DN616H	..WASHER- SERVICE BULLETIN OPT DATA: AN960D6L	950951	8
85	MS35338-117	..WASHER- SERVICE BULLETIN OPT DATA: BACW10EC06M	002004 006100 107107 121503 904999	8
85	BACW10EC06M	..WASHER- SERVICE BULLETIN OPT DATA: MS35338-117	950951	8
90	69B46200-27	..STANDOFF	002004 006100 107107 121503 904999	4
95	285T0394-4	..STRAP ASSY- SUPPLIER CODE: V89954 OPTIONAL PART: 285T0394-9 V89954 285T0394-11 V89954	002004 006100 107107 121503 904999	1
95	285T0394-9	..STRAP ASSY- SUPPLIER CODE: V89954 OPTIONAL PART: 285T0394-4 V89954 285T0394-11 V89954	002004 006100 107107 121503 904999	1

MISSING ITEM NUMBERS NOT APPLICABLE

— ITEM NOT ILLUSTRATED

BOEING PROPRIETARY - Copyright © - Unpublished Work - See title page for details.

FIG ITEM	PART NUMBER	1 2 3 4 5 6 7 NOMENCLATURE	EFFECT FROM TO	UNITS PER ASSY
1				
95	285T0394-11	..STRAP ASSY-	002004	1
		SUPPLIER CODE:	006100	
		V89954	107107	
		OPTIONAL PART:	121503	
		285T0394-4	904999	
		V89954		
		285T0394-9		
		V89954		
100	285T0394-1	..STRAP ASSY-	002004	1
		SUPPLIER CODE:	006100	
		V89954	107107	
		OPTIONAL PART:	121503	
		285T0394-7	904999	
		V89954		
100	285T0394-7	..STRAP ASSY-	002004	1
		SUPPLIER CODE:	006100	
		V89954	107107	
		OPTIONAL PART:	121503	
		285T0394-1	904999	
		V89954		
		ATTACHING PARTS		
- 105	MS35214-13	..SCREW	002004	4
			006100	
			107107	
			121503	
			904999	
- 110	NAS620-4	..WASHER	002004	4
			006100	
			107107	
			121503	
			904999	

MISSING ITEM NUMBERS NOT APPLICABLE

- ITEM NOT ILLUSTRATED

BOEING PROPRIETARY - Copyright © - Unpublished Work - See title page for details.

FIG ITEM	PART NUMBER	1 2 3 4 5 6 7 NOMENCLATURE	EFFECT FROM TO	UNITS PER ASSY
1				
- 115	BRH10A04	..NUT	002004	4
		SUPPLIER CODE:	006100	
		V52828	107107	
		SPECIFICATION NUMBER:	121503	
		BACN10JC04	904999	
		OPTIONAL PART:		
		NS202101-40		
		V80539		
		RMLH9075-40W		
		V72962		
		VN303A40		
		V92215		
		96-40		
		V80539		
		T6S440J		
		V11815		
		H10-04BAC		
		V15653		
		-------*-------		
120	285T0034-15	.PRINTED CIRCUIT ASSY-SIREN	107107	2
		OWL, AURAL WARNING	904949	
		SUPPLIER CODE:		
		V89954		
		ELECTRICAL EQUIP NUMBER:		
		M00619		
		M00999		
		COMPONENT MAINT MANUAL REF:		
		31-51-15		
		OPTIONAL PART:		
		285T0034-14		
		V89954		
120	285T0034-14	.PRINTED CIRCUIT ASSY-SIREN	107107	2
		OWL, AURAL WARNING	904949	
		SUPPLIER CODE:		
		V89954		
		ELECTRICAL EQUIP NUMBER:		
		M00619		
		M00999		
		COMPONENT MAINT MANUAL REF:		
		31-51-15		
		OPTIONAL PART:		
		285T0034-15		
		V89954		

MISSING ITEM NUMBERS NOT APPLICABLE

- ITEM NOT ILLUSTRATED

BOEING PROPRIETARY - Copyright © - Unpublished Work - See title page for details.

FIG ITEM	PART NUMBER	1 2 3 4 5 6 7 NOMENCLATURE	EFFECT FROM TO	UNITS PER ASSY
1				
120	285T0034-17	.PRINTED CIRCUIT ASSY-SIREN OWL, AURAL WARNING SUPPLIER CODE: V89954 ELECTRICAL EQUIP NUMBER: M00619 M00999 COMPONENT MAINT MANUAL REF: 31-51-15 OPTIONAL PART: 285T0034-16 V89954 285T0034-23 V89954	107107 904949	2
120	285T0034-16	.PRINTED CIRCUIT ASSY-SIREN OWL, AURAL WARNING SUPPLIER CODE: V89954 ELECTRICAL EQUIP NUMBER: M00619 M00999 COMPONENT MAINT MANUAL REF: 31-51-15 OPTIONAL PART: 285T0034-17 V89954 285T0034-23 V89954	107107 904949	2

MISSING ITEM NUMBERS NOT APPLICABLE

– ITEM NOT ILLUSTRATED

BOEING PROPRIETARY - Copyright © - Unpublished Work - See title page for details.

FIG ITEM	PART NUMBER	1 2 3 4 5 6 7 NOMENCLATURE	EFFECT FROM TO	UNITS PER ASSY
1				
120	285T0034-23	.PRINTED CIRCUIT ASSY-SIREN OWL, AURAL WARNING SUPPLIER CODE: V89954 ELECTRICAL EQUIP NUMBER: M00619 M00999 COMPONENT MAINT MANUAL REF: 31-51-15 QUALIFIED I/W DATA: 285T0034-23 INTERCHANGEABLE WITH 285T0034-26, 285T0034-30 OR 285T0034-31 EXCEPT TCAS SYSTEM OPERATION REQUIRES INSTALLATION OF 285T0034-26 OR 285T0034-30. OPTIONAL PART: 285T0034-17 V89954 285T0034-16 V89954	107107 904949	2
120	285T0034-26	.PRINTED CIRCUIT ASSY-SIREN OWL, AURAL WARNING SUPPLIER CODE: V89954 ELECTRICAL EQUIP NUMBER: M00619 M00999 COMPONENT MAINT MANUAL REF: 31-51-15 QUALIFIED I/W DATA: 285T0034-23 INTERCHANGEABLE WITH 285T0034-26, 285T0034-30 OR 285T0034-31 EXCEPT TCAS SYSTEM OPERATION REQUIRES INSTALLATION OF 285T0034-26 OR 285T0034-30.	002004 006100 121503 950999	2

MISSING ITEM NUMBERS NOT APPLICABLE

– ITEM NOT ILLUSTRATED

BOEING PROPRIETARY - Copyright © - Unpublished Work - See title page for details.

FIG ITEM	PART NUMBER	1 2 3 4 5 6 7 NOMENCLATURE	EFFECT FROM TO	UNITS PER ASSY
1				
120	285T0034-30	.PRINTED CIRCUIT ASSY- SIREN, OWL, AURAL, WARNING SUPPLIER CODE: V89954 ELECTRICAL EQUIP NUMBER: M00619 M00999 COMPONENT MAINT MANUAL REF: 31-51-15 QUALIFIED I/W DATA: 285T0034-23 INTERCHANGEABLE WITH 285T0034-26, 285T0034-30 OR 285T0034-31 EXCEPT TCAS SYSTEM OPERATION REQUIRES INSTALLATION OF 285T0034-26 OR 285T0034-30.	002004 006100 121503 950999	2
120	285T0034-31	.PRINTED CIRCUIT ASSY-SIREN OWL, AURAL WARNING SUPPLIER CODE: V89954 ELECTRICAL EQUIP NUMBER: M00619 M00999 COMPONENT MAINT MANUAL REF: 31-51-15 QUALIFIED I/W DATA: 285T0034-23 INTERCHANGEABLE WITH 285T0034-26, 285T0034-30 OR 285T0034-31 EXCEPT TCAS SYSTEM OPERATION REQUIRES INSTALLATION OF 285T0034-26 OR 285T0034-30.	002004 006100 121503 950999	2
125	71-2LA	..EXTRACTOR- SUPPLIER CODE: V18915	002004 006100 107107 121503 904999	1
130	71-2RA	..EXTRACTOR- SUPPLIER CODE: V18915	002004 006100 107107 121503 904999	1

MISSING ITEM NUMBERS NOT APPLICABLE

– ITEM NOT ILLUSTRATED

BOEING PROPRIETARY - Copyright © - Unpublished Work - See title page for details.

FIG ITEM	PART NUMBER	1 2 3 4 5 6 7 NOMENCLATURE	EFFECT FROM TO	UNITS PER ASSY
1				
135	MS35214-14	..SCREW	002004 006100 107107 121503 904999	7
140	MS35338-40	..WASHER	002004 006100 107107 121503 904999	4
145	285T0032-8	..COVER ASSY- SUPPLIER CODE: V89954	002004 006100 107107 121503 904999	1
150	9537AB0440-3	...STANDOFF- SUPPLIER CODE: V06540	002004 006100 107107 121503 904999	4
155	285T0032-7	...COVER-PROTECTIVE SUPPLIER CODE: V89954	002004 006100 107107 121503 904999	1
160	285T0035-10	.POWER SUPPLY- SUPPLIER CODE: V89954 ELECTRICAL EQUIP NUMBER: M00616 M00621 COMPONENT MAINT MANUAL REF: 31-51-20 OPTIONAL PART: 285T0035-9 V89954 285T0035-11 V89954	002004 006100 107107 121503 904999	2

MISSING ITEM NUMBERS NOT APPLICABLE

– ITEM NOT ILLUSTRATED

BOEING PROPRIETARY - Copyright © - Unpublished Work - See title page for details.

FIG ITEM	PART NUMBER	1 2 3 4 5 6 7 NOMENCLATURE	EFFECT FROM TO	UNITS PER ASSY
1				
160	285T0035-9	.POWER SUPPLY-	002004	2
		SUPPLIER CODE:	006100	
		V89954	107107	
		ELECTRICAL EQUIP NUMBER:	121503	
		M00616	904999	
		M00621		
		COMPONENT MAINT MANUAL REF:		
		31-51-20		
		OPTIONAL PART:		
		285T0035-10		
		V89954		
		285T0035-11		
		V89954		
160	285T0035-11	.POWER SUPPLY-	002004	2
		SUPPLIER CODE:	006100	
		V89954	107107	
		ELECTRICAL EQUIP NUMBER:	121503	
		M00616	904999	
		M00621		
		COMPONENT MAINT MANUAL REF:		
		31-51-20		
		OPTIONAL PART:		
		285T0035-9		
		V89954		
		285T0035-10		
		V89954		

MISSING ITEM NUMBERS NOT APPLICABLE

– ITEM NOT ILLUSTRATED

BOEING PROPRIETARY - Copyright © - Unpublished Work - See title page for details.

	FIG ITEM	PART NUMBER	1 2 3 4 5 6 7 NOMENCLATURE	EFFECT FROM TO	UNITS PER ASSY
	1				
R	160	285T0035-202	.POWER SUPPLY-	002004	2
R			SUPPLIER CODE:	006100	
R			V89954	107107	
R			FUNCTIONAL DESCRIPTION:	121503	
R			THE WARNING ELECTRONICS	904999	
R			UNIT POWER SUPPLY UNIT		
R			(WEUPSU) IS ONE OF TWO		
R			POWER SUPPLY UNITS		
R			SUPPLYING REGULATED DC		
R			POWER TO THE WEU. EACH		
R			IS POWERED FROM		
R			INDEPENDENT, SINGLE		
R			PHASE 115V AC BUS.		
R			MISCELLANEOUS DATA:		
R			285T0035-202 MOD A		
R			REPLACES CUT AND		
R			JUMPERED PWA WITH A		
R			CLEAN PWA		
R			ELECTRICAL EQUIP NUMBER:		
R			M00616		
R			M00621		
R			COMPONENT MAINT MANUAL REF:		
R			31-51-20		
R			POST COMPONENT SB:		
R			285T0035-31-07		
	165	NAS514P440-4P	..SCREW-	002004	16
			USED ON:	006100	
			285T0035-3	107107	
			285T0035-3A	121503	
			285T0035-9	904999	
			285T0035-9A		
			285T0035-10		
			285T0035-10A		
	168	MS24693C2	..SCREW-	002004	4
			USED ON:	006100	
			285T0035-201	107107	
			285T0035-202	121503	
				904999	
	170	NAS514P440-3P	..SCREW-	002004	1
			USED ON:	006100	
			285T0035-3	107107	
			285T0035-3A	121503	
			285T0035-10	904999	
			285T0035-10A		
			285T0035-11		

MISSING ITEM NUMBERS NOT APPLICABLE

— ITEM NOT ILLUSTRATED

BOEING PROPRIETARY - Copyright © - Unpublished Work - See title page for details.

FIG ITEM	PART NUMBER	1 2 3 4 5 6 7 NOMENCLATURE	EFFECT FROM TO	UNITS PER ASSY
1				
175	285T0333-3	..SCREW-	002004	1
		SUPPLIER CODE:	006100	
		V89954	107107	
		USED ON:	121503	
		285T0035-9	904999	
		285T0035-9A		
		285T0035-10		
		285T0035-10A		
		285T0035-11		
		285T0035-201		
175	285T0333-15	..SCREW-	002004	1
		SUPPLIER CODE:	006100	
		V89954	107107	
		USED ON:	121503	
		285T0035-202	904999	
178	MS21043-06	..NUT-	002004	8
		USED ON:	006100	
		285T0035-201	107107	
		285T0035-202	121503	
			904999	
180	RR2002-4B2	..GROMMET-	002004	1
		SUPPLIER CODE:	006100	
		V57268	107107	
		SPECIFICATION NUMBER:	121503	
		BACG20AF4B2	904999	
		OPTIONAL PART:		
		G6940-4B2		
		V75345		
		SZ6924-4B2		
		V95272		
		701-4B2		
		V07096		
		E4B2		
		V60980		
		H4B2		
		V60980		
		USED ON:		
		285T0035-3		
		285T0035-3A		
		285T0035-9		
		285T0035-9A		
		285T0035-10		
		285T0035-10A		
		285T0035-11		
		285T0035-201		
		285T0035-202		

MISSING ITEM NUMBERS NOT APPLICABLE

— ITEM NOT ILLUSTRATED

BOEING PROPRIETARY - Copyright © - Unpublished Work - See title page for details.

FIG ITEM	PART NUMBER	1 2 3 4 5 6 7 NOMENCLATURE	EFFECT FROM TO	UNITS PER ASSY
1				
181	MS16624-1025	..RING-	002004	1
		USED ON:	006100	
		285T0035-3	107107	
		285T0035-3A	121503	
		285T0035-9	904999	
		285T0035-9A		
		285T0035-10		
		285T0035-10A		
		285T0035-11		
		285T0035-201		
		285T0035-202		
182	BACW10P9AL	..WASHER-	002004	1
		USED ON:	006100	
		285T0035-3	107107	
		285T0035-3A	121503	
		285T0035-9	904999	
		285T0035-9A		
		285T0035-10		
		285T0035-10A		
		285T0035-11		
		285T0035-201		
		285T0035-202		
183	NAS1291C4M	..NUT-	002004	2
		USED ON:	006100	
		285T0035-3	107107	
		285T0035-3A	121503	
		285T0035-9	904999	
		285T0035-9A		
		285T0035-10		
		285T0035-10A		
		285T0035-11		
		285T0035-201		
		285T0035-202		
184	285T0381-1	..COVER-	002004	1
		SUPPLIER CODE:	006100	
		V89954	107107	
		USED ON:	121503	
		285T0035-201	904999	
		285T0035-202		

MISSING ITEM NUMBERS NOT APPLICABLE

– ITEM NOT ILLUSTRATED

BOEING PROPRIETARY - Copyright © - Unpublished Work - See title page for details.

FIG ITEM	PART NUMBER	1 2 3 4 5 6 7 NOMENCLATURE	EFFECT FROM TO	UNITS PER ASSY
1				
184	285T0339-12	..COVER-	002004	1
		SUPPLIER CODE:	006100	
		V89954	107107	
		USED ON:	121503	
		285T0035-3	904999	
		285T0035-3A		
		285T0035-9		
		285T0035-9A		
		285T0035-10		
		285T0035-10A		
		285T0035-11		
190	285N0041-6	.PRINTED CIRCUIT ASSY-	107107	2
		CLACKER WAILER	121503	
		SUPPLIER CODE:	904951	
		V89954	953999	
		ELECTRICAL EQUIP NUMBER:		
		M10421		
		M10422		
		COMPONENT MAINT MANUAL REF:		
		31-51-71		
		OPTIONAL PART:		
		285N0041-10		
		V89954		
		PRE SERVICE BULLETIN:		
		31-0164R1		
190	285N0041-10	.PRINTED CIRCUIT ASSY-	009009	2
		CLACKER WAILER	107107	
		SUPPLIER CODE:	121503	
		V89954	904951	
		ELECTRICAL EQUIP NUMBER:	953999	
		M10421		
		M10422		
		COMPONENT MAINT MANUAL REF:		
		31-51-71		
		OPTIONAL PART:		
		285N0041-6		
		V89954		
		POST SERVICE BULLETIN:		
		31-0127		
		31-0164R2		

MISSING ITEM NUMBERS NOT APPLICABLE

— ITEM NOT ILLUSTRATED

BOEING PROPRIETARY - Copyright © - Unpublished Work - See title page for details.

FIG ITEM	PART NUMBER	1 2 3 4 5 6 7 NOMENCLATURE	EFFECT FROM TO	UNITS PER ASSY
1				
190	285N0041-8	.PRINTED CIRCUIT ASSY- CLACKER WAILER SUPPLIER CODE: V89954 ELECTRICAL EQUIP NUMBER: M10421 M10422 COMPONENT MAINT MANUAL REF: 31-51-71 PRE SERVICE BULLETIN: 31-0164R2	002004 006100	2
195	285N0042-11	.PRINTED CIRCUIT ASSY-WEU DECISION HEIGHT SUPPLIER CODE: V89954 ELECTRICAL EQUIP NUMBER: M10423 COMPONENT MAINT MANUAL REF: 31-51-72 OPTIONAL PART: 285N0042-12 V89954	121503 904949	1
195	285N0042-12	.PRINTED CIRCUIT ASSY-WEU DECISION HEIGHT SUPPLIER CODE: V89954 ELECTRICAL EQUIP NUMBER: M10423 COMPONENT MAINT MANUAL REF: 31-51-72 OPTIONAL PART: 285N0042-11 V89954	121503 904949 953999	1
197	S906-10207-4	..LABEL-BAR CODE MANUFACTURER USED ON: 285N0041-10	009009 107107 121503 904951 953999	1
198	S906-10207-2	..LABEL-BAR CODE PN, SERIAL NO. AND MOD LEVEL USED ON: 285N0041-10	009009 107107 121503 904951 953999	3
200	71-2LA	..EXTRACTOR- SUPPLIER CODE: V18915	121503 904949 953999	1

MISSING ITEM NUMBERS NOT APPLICABLE

– ITEM NOT ILLUSTRATED

BOEING PROPRIETARY - Copyright © - Unpublished Work - See title page for details.

FIG ITEM	PART NUMBER	1 2 3 4 5 6 7 NOMENCLATURE	EFFECT FROM TO	UNITS PER ASSY
1				
200	71-2LA	..EXTRACTOR- SUPPLIER CODE: V18915	002004 006100 107107 950951	1
205	71-2RA	..EXTRACTOR- SUPPLIER CODE: V18915	121503 904949 953999	1
205	71-2RA	..EXTRACTOR- SUPPLIER CODE: V18915	002004 006100 107107 950951	1
210	MS35214-14	..SCREW	121503 904949 953999	7
210	MS35214-14	..SCREW	002004 006100 107107 950951	7
215	MS35338-135	..WASHER	121503 904949 953999	4
215	MS35338-135	..WASHER	002004 006100 107107 950951	4
220	AN960PD4	..WASHER	121503 904949 953999	4
220	AN960PD4	..WASHER	002004 006100 107107 950951	4
225	285T0032-8	..COVER ASSY- SUPPLIER CODE: V89954	121503 904949 953999	1
225	285T0032-8	..COVER ASSY- SUPPLIER CODE: V89954	002004 006100 107107 950951	1
- 400	286N1451-002	WIRE BUNDLE ASSY-	121503 904949	RF
- 400	286N1451-003	WIRE BUNDLE ASSY- REWORKED BY SB: 31-0164R1	107107	RF
- 400	286N1451-004	WIRE BUNDLE ASSY-	002004 006100 950999	RF

MISSING ITEM NUMBERS NOT APPLICABLE

- ITEM NOT ILLUSTRATED

BOEING PROPRIETARY - Copyright © - Unpublished Work - See title page for details.

FIG ITEM	PART NUMBER	1 2 3 4 5 6 7 NOMENCLATURE	EFFECT FROM TO	UNITS PER ASSY
1				
405	M24308-2-32	.RECEPTACLE-	002004	2
		ELECTRICAL EQUIP NUMBER:	006100	
		D00105	107107	
		D00107	121503	
		WIRING DIAGRAM REF:	904999	
		315111		
		315112		
		REWORKED BY SB:		
		31-0127		
410	300052-001	.CONNECTOR-	002004	4
		SUPPLIER CODE:	006100	
		V0D9V3	107107	
		SPECIFICATION NUMBER:	121503	
		BACC65L66	904999	
		OPTIONAL PART:		
		200620-01		
		V16512		
		300052-001		
		V03877		
		192-366-0010		
		V26742		
		S1009-00833		
		V03877		
		ELECTRICAL EQUIP NUMBER:		
		D00113		
		D00117		
		D00595		
		D00903		
		WIRING DIAGRAM REF:		
		315121		
		315141		
		315133		
		315142		

MISSING ITEM NUMBERS NOT APPLICABLE

– ITEM NOT ILLUSTRATED

BOEING PROPRIETARY - Copyright © - Unpublished Work - See title page for details.

FIG ITEM	PART NUMBER	1 2 3 4 5 6 7 NOMENCLATURE	EFFECT FROM TO	UNITS PER ASSY
1				
412	300052-001	.CONNECTOR-	002004	2
		SUPPLIER CODE:	006100	
		V0D9V3	107107	
		SPECIFICATION NUMBER:	121503	
		BACC65L66	904999	
		OPTIONAL PART:		
		200620-01		
		V16512		
		300052-001		
		V03877		
		192-366-0010		
		V26742		
		S1009-00833		
		V03877		
		ELECTRICAL EQUIP NUMBER:		
		D00115		
		D00901		
		WIRING DIAGRAM REF:		
		315132		
		315131		
		REWORKED BY SB:		
		31-0127		
415	300052-001	.CONNECTOR-	002004	3
		SUPPLIER CODE:	006100	
		V0D9V3	107107	
		SPECIFICATION NUMBER:	121503	
		BACC65L66	904949	
		OPTIONAL PART:	953999	
		200620-01		
		V16512		
		300052-001		
		V03877		
		192-366-0010		
		V26742		
		S1009-00833		
		V03877		
		ELECTRICAL EQUIP NUMBER:		
		D00905		
		D00815		
		D00907		
		WIRING DIAGRAM REF:		
		315135		
		315136		
		315134		

MISSING ITEM NUMBERS NOT APPLICABLE

— ITEM NOT ILLUSTRATED

BOEING PROPRIETARY - Copyright © - Unpublished Work - See title page for details.

FIG ITEM	PART NUMBER	1 2 3 4 5 6 7 NOMENCLATURE	EFFECT FROM TO	UNITS PER ASSY
1				
420	300052-001	.CONNECTOR-	950951	2
		SUPPLIER CODE:		
		V0D9V3		
		SPECIFICATION NUMBER:		
		BACC65L66		
		OPTIONAL PART:		
		200620-01		
		V16512		
		300052-001		
		V03877		
		192-366-0010		
		V26742		
		S1009-00833		
		V03877		
		ELECTRICAL EQUIP NUMBER:		
		D00905		
		D00815		
		WIRING DIAGRAM REF:		
		315135		
		315136		
		POST SERVICE BULLETIN:		
		31-0127		

MISSING ITEM NUMBERS NOT APPLICABLE

– ITEM NOT ILLUSTRATED

BOEING PROPRIETARY - Copyright © - Unpublished Work - See title page for details.

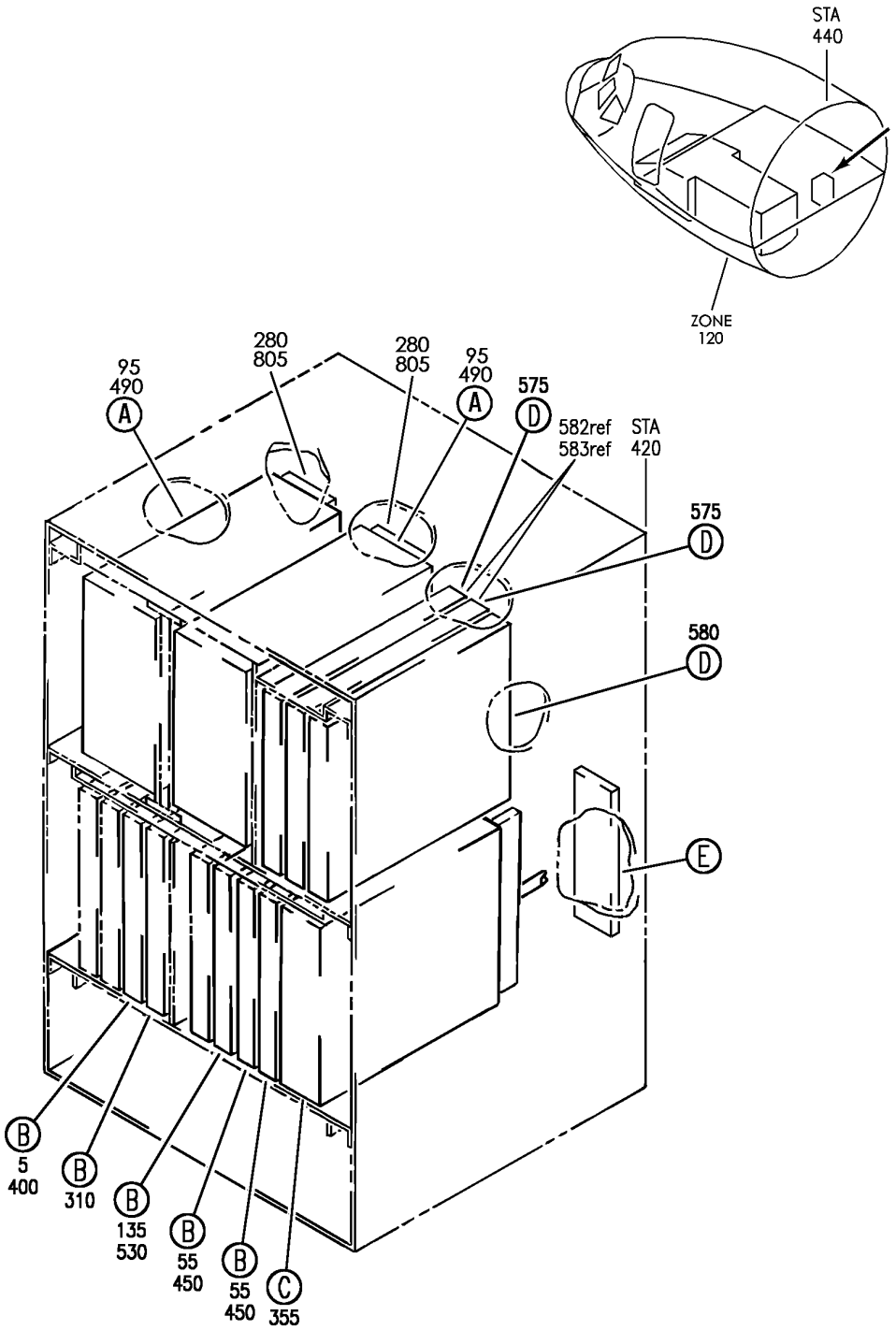

Y 31510101A SHT 1 REV 248

EQUIPMENT INSTL-MAIN ELECTRONICS EQPT CTR (WARNING SYSTEM ONLY)
FIGURE 1A (SHEET 1)

BOEING PROPRIETARY - Copyright © - Unpublished Work - See title page for details.

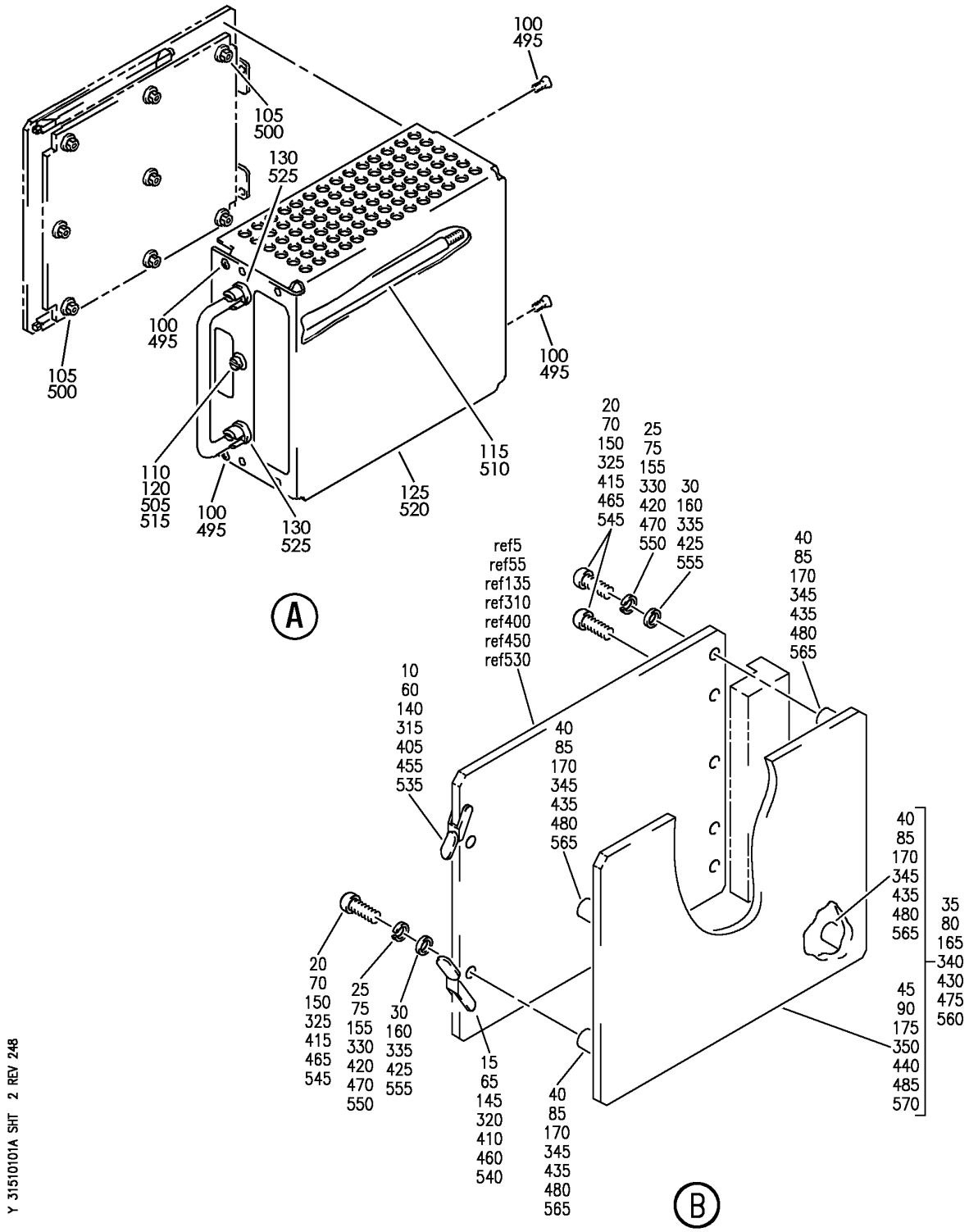

EQUIPMENT INSTL-MAIN ELECTRONICS EQPT CTR (WARNING SYSTEM ONLY)
FIGURE 1A (SHEET 2)

BOEING PROPRIETARY - Copyright © - Unpublished Work - See title page for details.

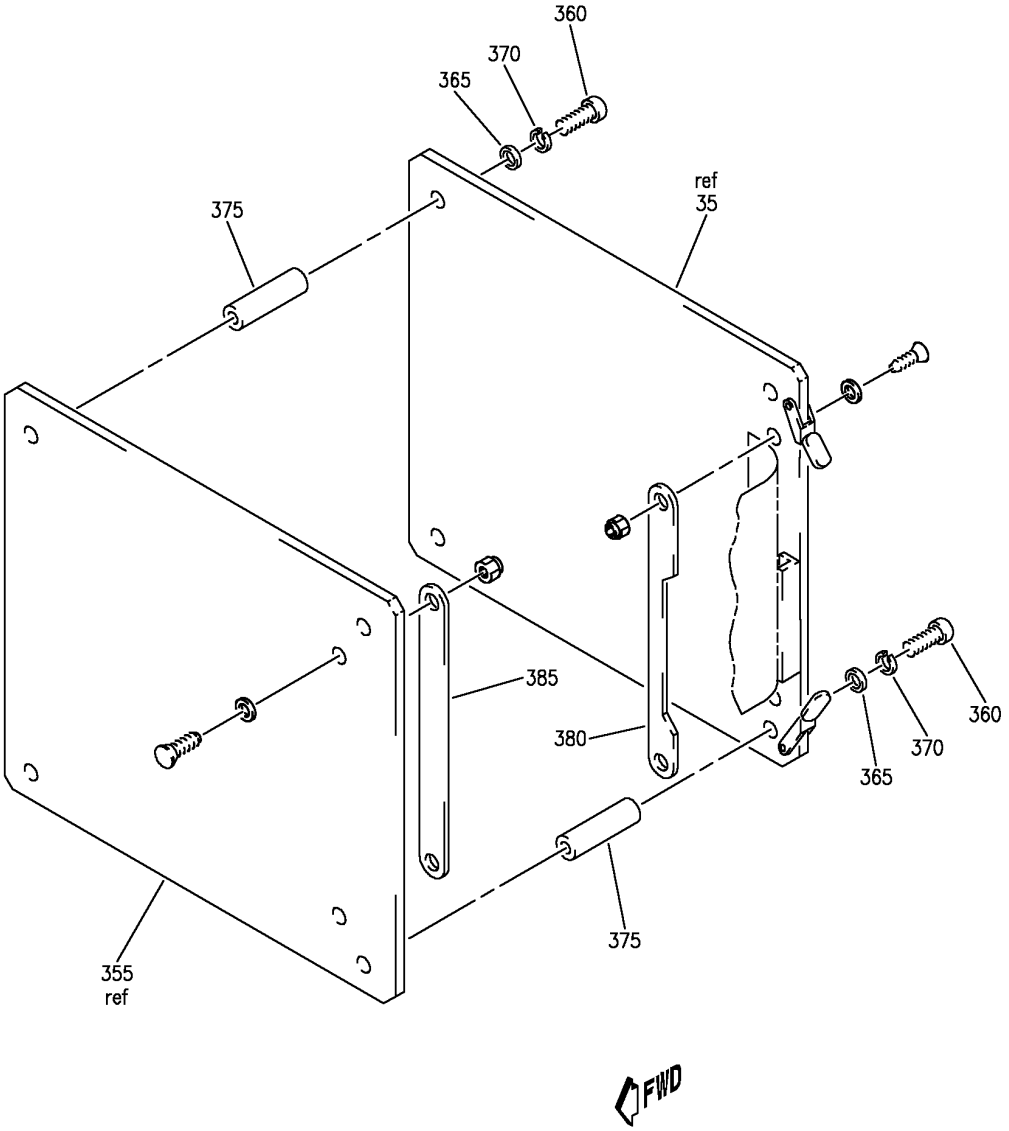

Y 31510101A SHT 3 REV 248

EQUIPMENT INSTL-MAIN ELECTRONICS EQPT CTR (WARNING SYSTEM ONLY)
FIGURE 1A (SHEET 3)

BOEING PROPRIETARY - Copyright © - Unpublished Work - See title page for details.

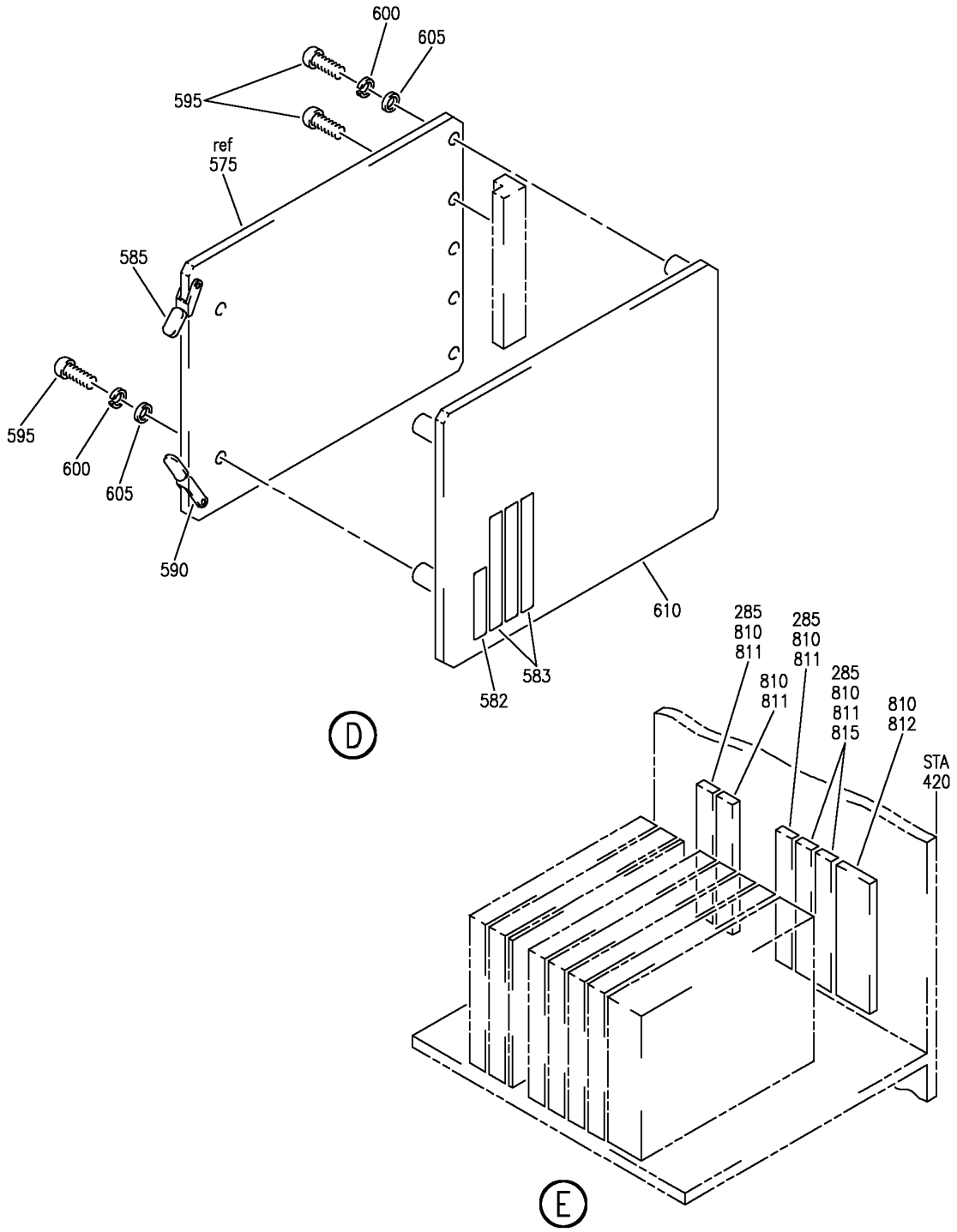

Y 31510101A SHT 4 REV 294

EQUIPMENT INSTL-MAIN ELECTRONICS EQPT CTR (WARNING SYSTEM ONLY)
FIGURE 1A (SHEET 4)

BOEING PROPRIETARY - Copyright © - Unpublished Work - See title page for details.

	FIG ITEM	PART NUMBER	1 2 3 4 5 6 7 NOMENCLATURE	EFFECT FROM TO	UNITS PER ASSY
	1A				
			EQUIPMENT INSTL-MAIN ELECTRONICS EQPT CTR (WARNING SYSTEM ONLY)	504903	
R	5	285T0259-21	.PRINTED CIRCUIT ASSY- TAKEOFF CONFIGURATION SUPPLIER CODE: V89954 MISCELLANEOUS DATA: 285T0259-19, -20 AND -21 ARE ALL INTERCHANGEABLE ELECTRICAL EQUIP NUMBER: M00620	504903	1
R	- 301	284N1800-88	EQUIPMENT INSTL-MAIN ELECTRONICS EQPT CTR (WARNING SYSTEM ONLY) FOR NHA/OTHER SYS DET SEE: 24-00-58-05E	505505	RF
R	- 302	284N1800-190	EQUIPMENT INSTL-MAIN ELECTRONICS EQPT CTR (WARNING SYSTEM ONLY) FOR NHA/OTHER SYS DET SEE: 24-00-58-05E	504504 506903	RF
R	310	285T0031-16	.PRINTED CIRCUIT ASSY-LDG CONFIGURATION WARNING ELECTRONICS UNIT SUPPLIER CODE: V89954 ELECTRICAL EQUIP NUMBER: M00983 COMPONENT MAINT MANUAL REF: 31-51-12 OPTIONAL PART: 285T0031-17 V89954 USED ON: 284N1800-78 284N1800-98 284N1800-133 284N1800-150	504903	1

MISSING ITEM NUMBERS NOT APPLICABLE

– ITEM NOT ILLUSTRATED

BOEING PROPRIETARY - Copyright © - Unpublished Work - See title page for details.

FIG ITEM	PART NUMBER	1 2 3 4 5 6 7 NOMENCLATURE	EFFECT FROM TO	UNITS PER ASSY
1A				
310	285T0031-17	.PRINTED CIRCUIT ASSY-LDG CONFIGURATION WARNING ELECTRONICS UNIT SUPPLIER CODE: V89954 ELECTRICAL EQUIP NUMBER: M00983 COMPONENT MAINT MANUAL REF: 31-51-12 OPTIONAL PART: 285T0031-16 V89954 USED ON: 284N1800-78 284N1800-97 284N1800-98 284N1800-133 284N1800-150	504903	1
315	71-2LA	..EXTRACTOR- SUPPLIER CODE: V18915	504903	1
320	71-2RA	..EXTRACTOR- SUPPLIER CODE: V18915	504903	1
325	MS35214-14	..SCREW	504903	7
330	MS35338-135	..WASHER	504903	4
335	AN960PD4	..WASHER	504903	4
340	285T0032-8	..COVER ASSY- SUPPLIER CODE: V89954	504903	1
345	9537AB0440-3	...STANDOFF- SUPPLIER CODE: V06540	504903	4
350	285T0032-7	...COVER-PROTECTIVE SUPPLIER CODE: V89954	504903	1

MISSING ITEM NUMBERS NOT APPLICABLE

– ITEM NOT ILLUSTRATED

BOEING PROPRIETARY - Copyright © - Unpublished Work - See title page for details.

FIG ITEM	PART NUMBER	1 2 3 4 5 6 7 NOMENCLATURE	EFFECT FROM TO	UNITS PER ASSY
1A				
355	285T0385-6	.MODULE ASSY-WARNING ELECTRONICS UNIT BELL CHIMES SUPPLIER CODE: V89954 ELECTRICAL EQUIP NUMBER: M01000 COMPONENT MAINT MANUAL REF: 31-51-10 QUALIFIED I/W DATA: 285T0385-6 IS FULLY INTERCHANGEABLE WITH 285T0385-5 PROVIDED THE CUSTOMERS AIRPLANES ARE NOT FLYING UNDER CAA OR JAA CERTIFICATION, IN WHICH CASE THE 285T0385-5 IS PROHIBITED.	504903	1
360	NAS1801-06-6	..SCREW	504903	8
365	AN960D6L	..WASHER	504903	8
370	MS35338-117	..WASHER	504903	8
375	69B46200-27	..STANDOFF	504903	4
380	285T0394-4	..STRAP ASSY- SUPPLIER CODE: V89954 OPTIONAL PART: 285T0394-9 V89954 285T0394-11 V89954	504903	1
380	285T0394-9	..STRAP ASSY- SUPPLIER CODE: V89954 OPTIONAL PART: 285T0394-4 V89954 285T0394-11 V89954	504903	1
380	285T0394-11	..STRAP ASSY- SUPPLIER CODE: V89954 OPTIONAL PART: 285T0394-4 V89954 285T0394-9 V89954	504903	1

MISSING ITEM NUMBERS NOT APPLICABLE

— ITEM NOT ILLUSTRATED

BOEING PROPRIETARY - Copyright © - Unpublished Work - See title page for details.

FIG ITEM	PART NUMBER	1 2 3 4 5 6 7 NOMENCLATURE	EFFECT FROM TO	UNITS PER ASSY
1A				
385	285T0394-1	..STRAP ASSY-	504903	1
		SUPPLIER CODE:		
		V89954		
		OPTIONAL PART:		
		285T0394-7		
		V89954		
385	285T0394-7	..STRAP ASSY-	504903	1
		SUPPLIER CODE:		
		V89954		
		OPTIONAL PART:		
		285T0394-1		
		V89954		
		ATTACHING PARTS		
- 390	MS35214-13	..SCREW	504903	4
- 392	NAS620-4	..WASHER	504903	4
- 395	BRH10A04	..NUT	504903	4
		SUPPLIER CODE:		
		V52828		
		SPECIFICATION NUMBER:		
		BACN10JC04		
		OPTIONAL PART:		
		NS202101-40		
		V80539		
		RMLH9075-40W		
		V72962		
		VN303A40		
		V92215		
		96-40		
		V80539		
		T6S440J		
		V11815		
		H10-04BAC		
		V15653		
		-------*-------		

MISSING ITEM NUMBERS NOT APPLICABLE

– ITEM NOT ILLUSTRATED

BOEING PROPRIETARY - Copyright © - Unpublished Work - See title page for details.

	FIG ITEM	PART NUMBER	1 2 3 4 5 6 7 NOMENCLATURE	EFFECT FROM TO	UNITS PER ASSY
	1A				
R	400	285T0259-19	.PRINTED CIRCUIT ASSY-	504903	1
R			TAKE-OFF CONFIGURATION		
R			SUPPLIER CODE:		
R			V89954		
R			MISCELLANEOUS DATA:		
R			285T0259-19, -20		
R			AND -21 ARE ALL		
R			INTERCHANGEABLE		
R			ELECTRICAL EQUIP NUMBER:		
R			M00620		
R			COMPONENT MAINT MANUAL REF:		
R			31-51-11		
R			USED ON:		
R			284N1800-112		
R			284N1800-135		
R			284N1800-156		
	400	285T0259-17	.PRINTED CIRCUIT ASSY-	504903	1
			TAKE-OFF CONFIGURATION		
			SUPPLIER CODE:		
			V89954		
			ELECTRICAL EQUIP NUMBER:		
			M00620		
			COMPONENT MAINT MANUAL REF:		
			31-51-11		
			USED ON:		
			284N1800-112		
			284N1800-135		
			284N1800-156		
R	400	285T0259-20	.PRINTED CIRCUIT ASSY-	504903	1
R			TAKE-OFF CONFIGURATION		
R			SUPPLIER CODE:		
R			V89954		
R			MISCELLANEOUS DATA:		
R			285T0259-19, -20		
R			AND -21 ARE ALL		
R			INTERCHANGEABLE		
R			ELECTRICAL EQUIP NUMBER:		
R			M00620		
R			COMPONENT MAINT MANUAL REF:		
R			31-51-11		
R			USED ON:		
R			284N1800-112		
R			284N1800-135		
R			284N1800-156		

MISSING ITEM NUMBERS NOT APPLICABLE

— ITEM NOT ILLUSTRATED

BOEING PROPRIETARY - Copyright © - Unpublished Work - See title page for details.

	FIG ITEM	PART NUMBER	1 2 3 4 5 6 7 NOMENCLATURE	EFFECT FROM TO	UNITS PER ASSY
	1A				
R	400	285T0259-21	.PRINTED CIRCUIT ASSY-	504903	1
R			TAKE-OFF CONFIGURATION		
R			SUPPLIER CODE:		
R			V89954		
R			MISCELLANEOUS DATA:		
R			285T0259-19, -20		
R			AND -21 ARE ALL		
R			INTERCHANGEABLE		
R			ELECTRICAL EQUIP NUMBER:		
R			M00620		
R			COMPONENT MAINT MANUAL REF:		
R			31-51-11		
R			USED ON:		
R			284N1800-112		
R			284N1800-135		
R			284N1800-156		
	405	71-2LA	..EXTRACTOR-	504903	1
			SUPPLIER CODE:		
			V18915		
	410	71-2RA	..EXTRACTOR-	504903	1
			SUPPLIER CODE:		
			V18915		
	415	MS35214-14	..SCREW	504903	4
	420	MS35338-135	..WASHER	504903	4
	425	AN960PD4	..WASHER	504903	4
	430	285T0032-8	..COVER ASSY-	504903	1
			SUPPLIER CODE:		
			V89954		
	435	9537AB0440-3	...STANDOFF-	504903	4
			SUPPLIER CODE:		
			V06540		
	440	285T0032-7	...COVER-PROTECTIVE	504903	1
			SUPPLIER CODE:		
			V89954		
	445	MS35214-14	..SCREW	504903	3

MISSING ITEM NUMBERS NOT APPLICABLE

— ITEM NOT ILLUSTRATED

BOEING PROPRIETARY - Copyright © - Unpublished Work - See title page for details.

FIG ITEM	PART NUMBER	1 2 3 4 5 6 7 NOMENCLATURE	EFFECT FROM TO	UNITS PER ASSY
1A				
450	285T0034-26	.PRINTED CIRCUIT ASSY-SIREN OWL, AURAL WARNING SUPPLIER CODE: V89954 ELECTRICAL EQUIP NUMBER: M00619 M00999 COMPONENT MAINT MANUAL REF: 31-51-15 QUALIFIED I/W DATA: 285T0034-23 INTERCHANGEABLE WITH 285T0034-26, 285T0034-30 OR 285T0034-31 EXCEPT TCAS SYSTEM OPERATION REQUIRES INSTALLATION OF 285T0034-26 OR 285T0034-30. USED ON: 284N1800-112 284N1800-135 284N1800-156	504903	2
450	285T0034-30	.PRINTED CIRCUIT ASSY-SIREN/OWL, AURAL WARNING SUPPLIER CODE: V89954 ELECTRICAL EQUIP NUMBER: M00619 M00999 COMPONENT MAINT MANUAL REF: 31-51-15 QUALIFIED I/W DATA: 285T0034-23 INTERCHANGEABLE WITH 285T0034-26, 285T0034-30 OR 285T0034-31 EXCEPT TCAS SYSTEM OPERATION REQUIRES INSTALLATION OF 285T0034-26 OR 285T0034-30.	504903	2

MISSING ITEM NUMBERS NOT APPLICABLE

– ITEM NOT ILLUSTRATED

BOEING PROPRIETARY - Copyright © - Unpublished Work - See title page for details.

FIG ITEM	PART NUMBER	1 2 3 4 5 6 7 NOMENCLATURE	EFFECT FROM TO	UNITS PER ASSY
1A				
450	285T0034-31	.PRINTED CIRCUIT ASSY- SIREN/OWL, AURAL WARNING SUPPLIER CODE: V89954 ELECTRICAL EQUIP NUMBER: M00619 M00999 COMPONENT MAINT MANUAL REF: 31-51-15 QUALIFIED I/W DATA: 285T0034-23 INTERCHANGEABLE WITH 285T0034-26, 285T0034-30 OR 285T0034-31 EXCEPT TCAS SYSTEM OPERATION REQUIRES INSTALLATION OF 285T0034-26 OR 285T0034-30.	504903	2
455	71-2LA	..EXTRACTOR- SUPPLIER CODE: V18915	504903	1
460	71-2RA	..EXTRACTOR- SUPPLIER CODE: V18915	504903	1
465	MS35214-14	..SCREW	504903	7
470	MS35338-40	..WASHER	504903	4
475	285T0032-8	..COVER ASSY- SUPPLIER CODE: V89954	504903	1
480	9537AB0440-3	...STANDOFF- SUPPLIER CODE: V06540	504903	4
485	285T0032-7	...COVER-PROTECTIVE SUPPLIER CODE: V89954	504903	1

MISSING ITEM NUMBERS NOT APPLICABLE

– ITEM NOT ILLUSTRATED

BOEING PROPRIETARY - Copyright © - Unpublished Work - See title page for details.

	FIG ITEM	PART NUMBER	1 2 3 4 5 6 7 NOMENCLATURE	EFFECT FROM TO	UNITS PER ASSY
	1A				
R	490	285T0035-202	.POWER SUPPLY-	504903	2
R			SUPPLIER CODE:		
R			V89954		
R			FUNCTIONAL DESCRIPTION:		
R			THE WARNING ELECTRONICS		
R			UNIT POWER SUPPLY UNIT		
R			(WEUPSU) IS ONE OF TWO		
R			POWER SUPPLY UNITS		
R			SUPPLYING REGULATED DC		
R			POWER TO THE WEU. EACH		
R			IS POWERED FROM		
R			INDEPENDENT, SINGLE		
R			PHASE 115V AC BUS.		
R			MISCELLANEOUS DATA:		
R			285T0035-202 MOD A		
R			REPLACES CUT AND		
R			JUMPERED PWA WITH A		
R			CLEAN PWA		
R			ELECTRICAL EQUIP NUMBER:		
R			M00616		
R			M00621		
R			COMPONENT MAINT MANUAL REF:		
R			31-51-20		
R			USED ON:		
R			284N1800-135		
	490	285T0035-11	.POWER SUPPLY-	504903	2
			SUPPLIER CODE:		
			V89954		
			ELECTRICAL EQUIP NUMBER:		
			M00616		
			M00621		
			COMPONENT MAINT MANUAL REF:		
			31-51-20		
	490	285T0035-10	.POWER SUPPLY-	504903	2
			SUPPLIER CODE:		
			V89954		
			ELECTRICAL EQUIP NUMBER:		
			M00616		
			M00621		
			COMPONENT MAINT MANUAL REF:		
			31-51-20		
	490	285T0035-9	.POWER SUPPLY-	504903	2
			SUPPLIER CODE:		
			V89954		
			ELECTRICAL EQUIP NUMBER:		
			M00616		
			M00621		
			COMPONENT MAINT MANUAL REF:		
			31-51-20		

MISSING ITEM NUMBERS NOT APPLICABLE

– ITEM NOT ILLUSTRATED

BOEING PROPRIETARY - Copyright © - Unpublished Work - See title page for details.

FIG ITEM	PART NUMBER	1 2 3 4 5 6 7 NOMENCLATURE	EFFECT FROM TO	UNITS PER ASSY
1A				
495	MS24693C2	..SCREW	504903	4
500	MS21043-03	..NUT	504903	8
505	MS16624-1025	..RING-RETAINING	504903	1
510	285T0333-3	..SCREW-	504903	1
		SUPPLIER CODE:		
		V89954		
515	RR2002-4B2	..GROMMET	504903	1
		SUPPLIER CODE:		
		V57268		
		SPECIFICATION NUMBER:		
		BACG20AF4B2		
		OPTIONAL PART:		
		G6940-4B2		
		V75345		
		SZ6924-4B2		
		V95272		
		701-4B2		
		V07096		
		E4B2		
		V60980		
		H4B2		
		V60980		
520	285T0381-1	..COVER-	504903	1
		SUPPLIER CODE:		
		V89954		
525	BACW10P9AL	..WASHER	504903	2
530	285T0032-19	.PRINTED CIRCUIT ASSY-	504903	1
		MASTER WARNING		
		SUPPLIER CODE:		
		V89954		
		ELECTRICAL EQUIP NUMBER:		
		M00618		
		COMPONENT MAINT MANUAL REF:		
		31-51-13		
		USED ON:		
		284N1800-112		
		284N1800-135		
		284N1800-156		
535	71-2LA	..EXTRACTOR-	504903	1
		SUPPLIER CODE:		
		V18915		
540	71-2RA	..EXTRACTOR-	504903	1
		SUPPLIER CODE:		
		V18915		
545	MS35214-14	..SCREW	504903	7
550	MS35338-135	..WASHER	504903	4
555	AN960PD4	..WASHER	504903	4

MISSING ITEM NUMBERS NOT APPLICABLE

– ITEM NOT ILLUSTRATED

BOEING PROPRIETARY - Copyright © - Unpublished Work - See title page for details.

FIG ITEM	PART NUMBER	1 2 3 4 5 6 7 NOMENCLATURE	EFFECT FROM TO	UNITS PER ASSY
1A				
560	285T0032-8	..COVER ASSY- SUPPLIER CODE: V89954	504903	1
565	9537AB0440-3	...STANDOFF- SUPPLIER CODE: V06540	504903	4
570	285T0032-7	...COVER-PROTECTIVE SUPPLIER CODE: V89954	504903	1
575	285N0041-10	.PRINTED CIRCUIT ASSY- CLACKER WAILER SUPPLIER CODE: V89954 ELECTRICAL EQUIP NUMBER: M10421 M10422 COMPONENT MAINT MANUAL REF: 31-51-71	504903	2
575	285N0041-6	.PRINTED CIRCUIT ASSY- CLACKER WAILER SUPPLIER CODE: V89954 ELECTRICAL EQUIP NUMBER: M10421 M10422 COMPONENT MAINT MANUAL REF: 31-51-71	504903	2
580	285N0042-12	.PRINTED CIRCUIT ASSY-WEU DECISION HEIGHT SUPPLIER CODE: V89954 ELECTRICAL EQUIP NUMBER: M10423 COMPONENT MAINT MANUAL REF: 31-51-72	504903	1
582	S906-10207-4	..LABEL-BAR CODE MANUFACTURER USED ON: 285N0041-10	504903	1
583	S906-10207-2	..LABEL-BAR CODE PN, SERIAL NO. AND MOD LEVEL USED ON: 285N0041-10	504903	3
585	71-2LA	..EXTRACTOR- SUPPLIER CODE: V18915	504903	1

MISSING ITEM NUMBERS NOT APPLICABLE

— ITEM NOT ILLUSTRATED

BOEING PROPRIETARY - Copyright © - Unpublished Work - See title page for details.

FIG ITEM	PART NUMBER	1 2 3 4 5 6 7 NOMENCLATURE	EFFECT FROM TO	UNITS PER ASSY
1A				
590	71-2RA	..EXTRACTOR-	504903	1
		SUPPLIER CODE:		
		V18915		
595	MS35214-14	..SCREW	504903	7
600	MS35338-135	..WASHER	504903	4
605	AN960PD4	..WASHER	504903	4
610	285T0032-8	..COVER ASSY-	504903	1
		SUPPLIER CODE:		
		V89954		
- 801	286N1451-360	WIRE BUNDLE ASSY	504903	RF
805	M24308-2-32	.RECEPTACLE-	504903	2
		ELECTRICAL EQUIP NUMBER:		
		D00105		
		D00107		
		USED ON:		
		284N1800-52		
810	300052-001	.CONNECTOR-	504903	6
		SUPPLIER CODE:		
		V0D9V3		
		SPECIFICATION NUMBER:		
		BACC65L66		
		OPTIONAL PART:		
		200620-01		
		V16512		
		300052-001		
		V03877		
		192-366-0010		
		V26742		
		S1009-00833		
		V03877		
		ELECTRICAL EQUIP NUMBER:		
		D00113		
		D00115		
		D00117		
		D00595		
		D00901		
		D00903		
		WIRING DIAGRAM REF:		
		215131		
		215141		
		273211		
		315131		
		315133		
		315142		

MISSING ITEM NUMBERS NOT APPLICABLE

- ITEM NOT ILLUSTRATED

BOEING PROPRIETARY - Copyright © - Unpublished Work - See title page for details.

FIG ITEM	PART NUMBER	1 2 3 4 5 6 7 NOMENCLATURE	EFFECT FROM TO	UNITS PER ASSY
1A				
815	300052-001	.CONNECTOR-	504903	3
		SUPPLIER CODE:		
		V0D9V3		
		SPECIFICATION NUMBER:		
		BACC65L66		
		OPTIONAL PART:		
		200620-01		
		V16512		
		300052-001		
		V03877		
		192-366-0010		
		V26742		
		S1009-00833		
		V03877		
		ELECTRICAL EQUIP NUMBER:		
		D00905		
		D00815		
		D00907		
		WIRING DIAGRAM REF:		
		315135		
		315136		
		315134		

MISSING ITEM NUMBERS NOT APPLICABLE

– ITEM NOT ILLUSTRATED

BOEING PROPRIETARY - Copyright © - Unpublished Work - See title page for details.

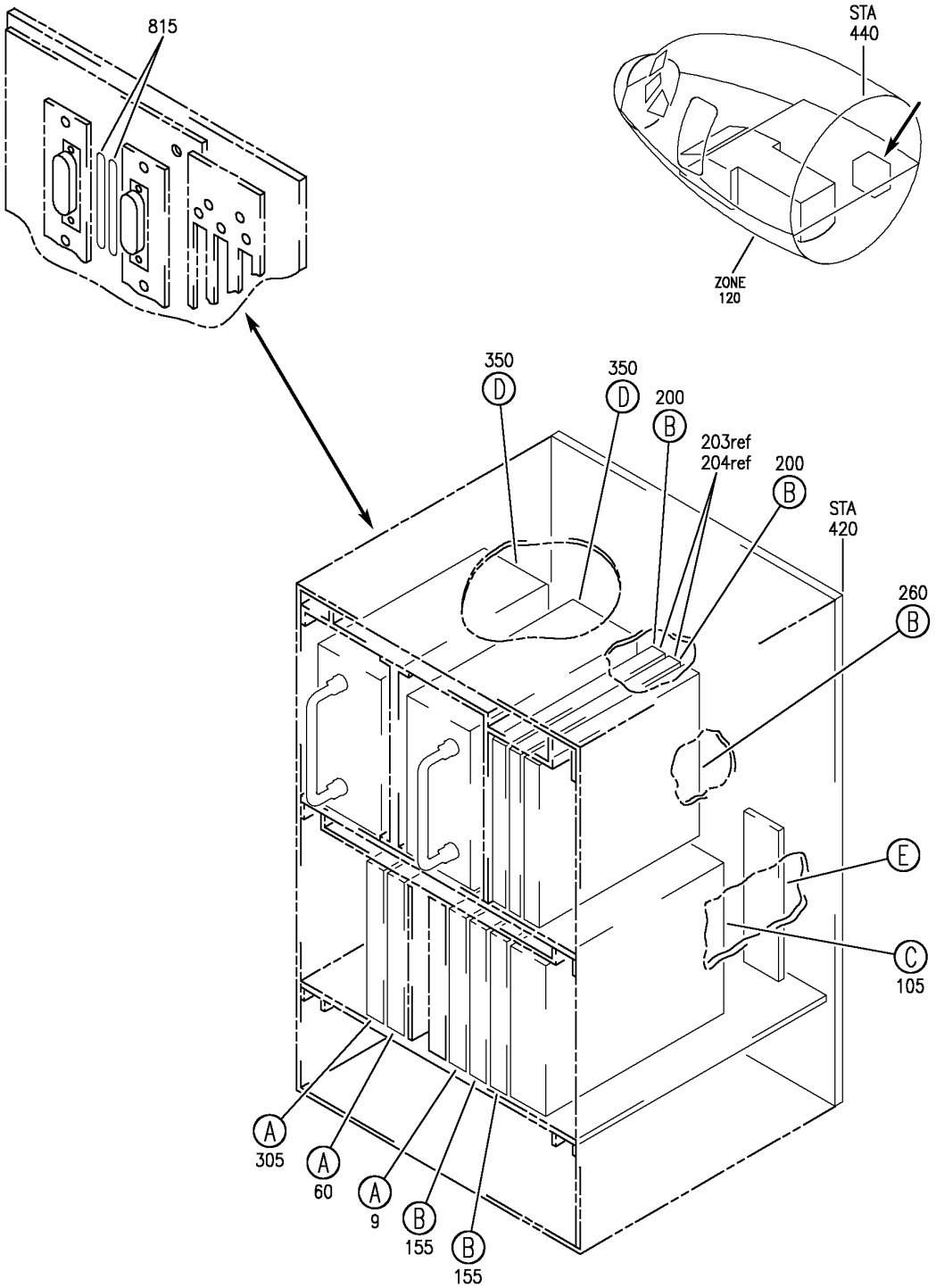

EQUIPMENT INSTL-MAIN ELECTRONICS EQPT CTR (WARNING SYSTEM ONLY)
FIGURE 1B (SHEET 1)

BOEING PROPRIETARY - Copyright © - Unpublished Work - See title page for details.

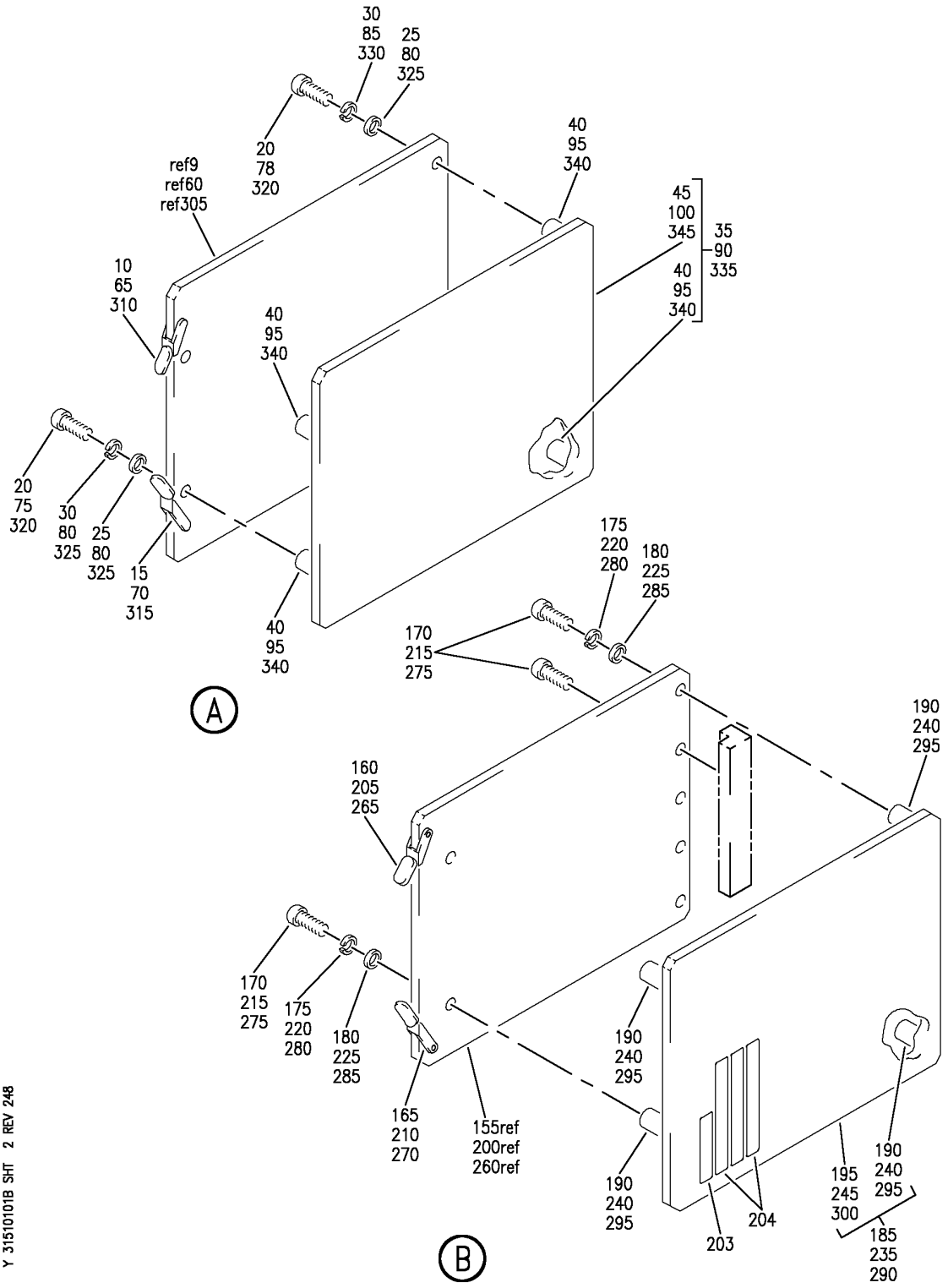

EQUIPMENT INSTL-MAIN ELECTRONICS EQPT CTR (WARNING SYSTEM ONLY)
FIGURE 1B (SHEET 2)

BOEING PROPRIETARY - Copyright © - Unpublished Work - See title page for details.

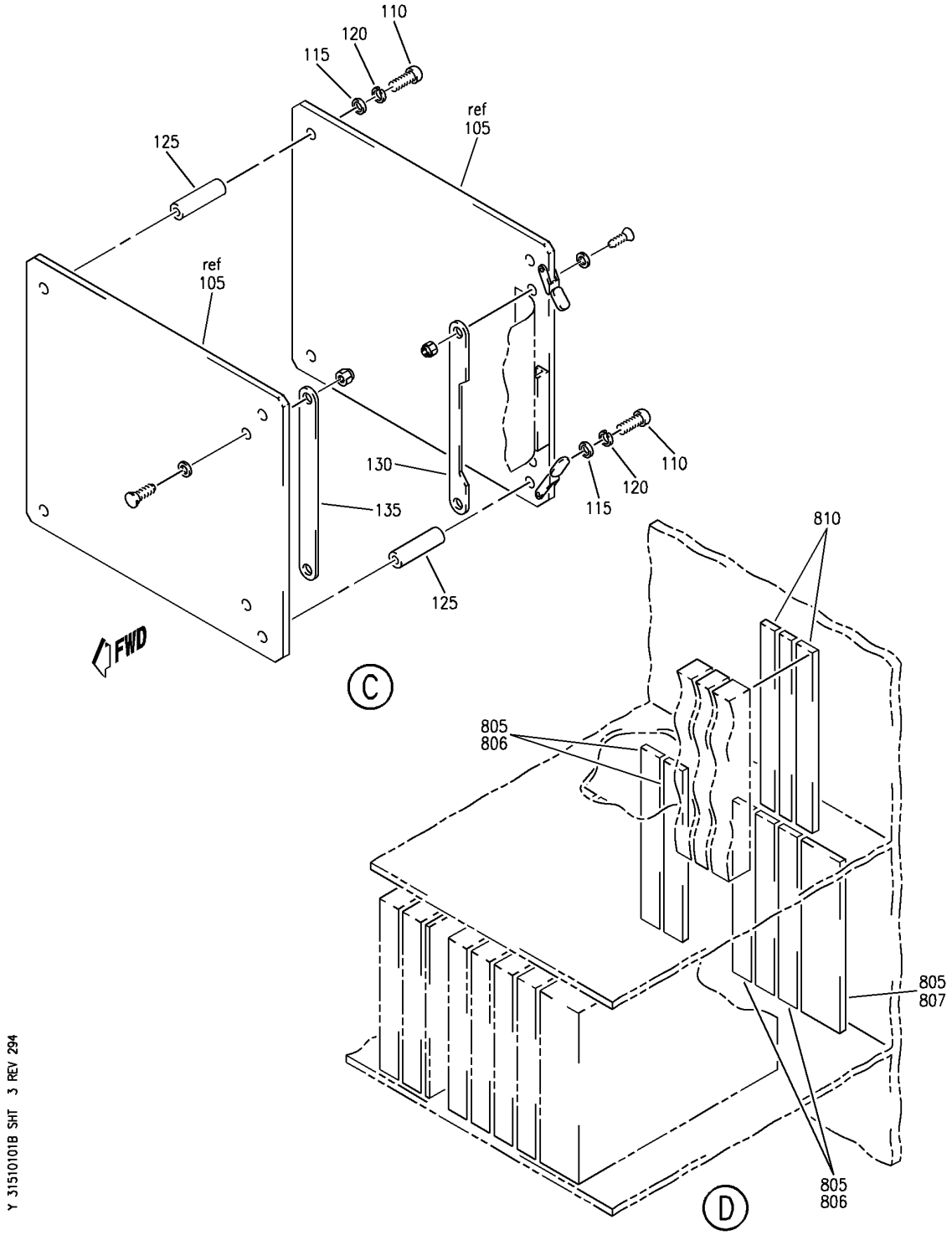

EQUIPMENT INSTL-MAIN ELECTRONICS EQPT CTR (WARNING SYSTEM ONLY)
FIGURE 1B (SHEET 3)

BOEING PROPRIETARY - Copyright © - Unpublished Work - See title page for details.

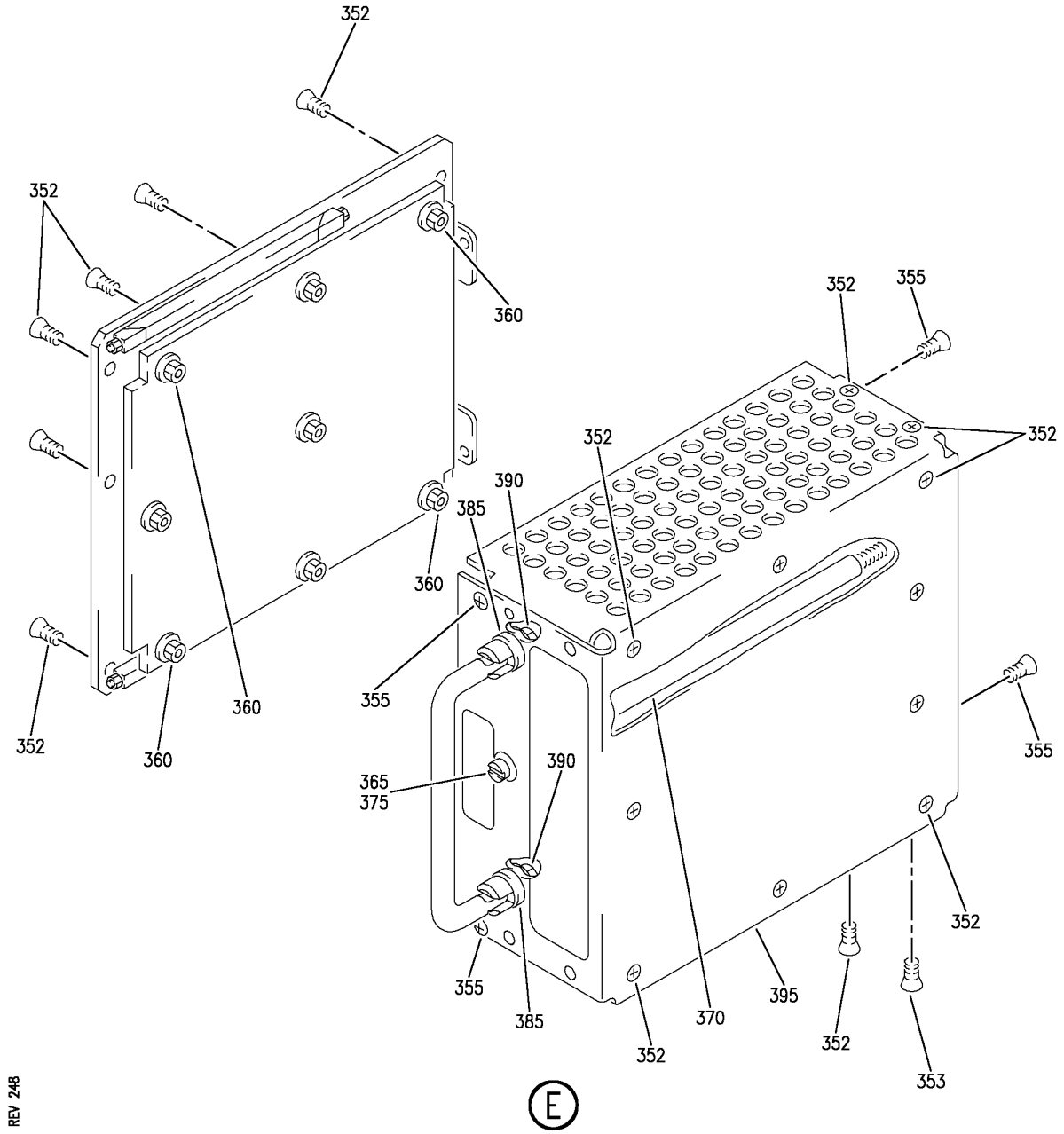

Y 31510101B SHT 4 REV 248

EQUIPMENT INSTL-MAIN ELECTRONICS EQPT CTR (WARNING SYSTEM ONLY)
FIGURE 1B (SHEET 4)

BOEING PROPRIETARY - Copyright © - Unpublished Work - See title page for details.

FIG ITEM	PART NUMBER	1 2 3 4 5 6 7 NOMENCLATURE	EFFECT FROM TO	UNITS PER ASSY
1B				
		EQUIPMENT INSTL-MAIN ELECTRONICS EQPT CTR (WARNING SYSTEM ONLY)	101102	
- 2	284N1800-140	EQUIPMENT INSTL-MAIN ELECTRONICS EQPT CTR (WARNING SYSTEM ONLY) FOR NHA/OTHER SYS DET SEE: 24-00-58-05E	101101	RF
- 3	284N1800-141	EQUIPMENT INSTL-MAIN ELECTRONICS EQPT CTR (WARNING SYSTEM ONLY) FOR NHA/OTHER SYS DET SEE: 24-00-58-05E	102102	RF
9	285T0032-19	.PRINTED CIRCUIT ASSY- MASTER WARNING SUPPLIER CODE: V89954 ELECTRICAL EQUIP NUMBER: M00618 COMPONENT MAINT MANUAL REF: 31-51-13 USED ON: 284N1800-102	101102	1
10	71-2LA	..EXTRACTOR- SUPPLIER CODE: V18915	101102	1
15	71-2RA	..EXTRACTOR- SUPPLIER CODE: V18915	101102	1
20	MS35214-14	..SCREW	101102	4
25	AN60PD4	..WASHER	101102	4
30	MS35338-135	..WASHER	101102	4
35	285T0032-8	..COVER ASSY- SUPPLIER CODE: V89954	101102	1
40	9537AB0440-3	...STANDOFF- SUPPLIER CODE: V06540	101102	4
45	285T0032-7	...COVER-PROTECTIVE SUPPLIER CODE: V89954	101102	1

MISSING ITEM NUMBERS NOT APPLICABLE

- ITEM NOT ILLUSTRATED

BOEING PROPRIETARY - Copyright © - Unpublished Work - See title page for details.

FIG ITEM	PART NUMBER	1 2 3 4 5 6 7 NOMENCLATURE	EFFECT FROM TO	UNITS PER ASSY
1B				
60	285T0031-16	.PRINTED CIRCUIT ASSY- LDG CONFIGURATION WARNING ELECTRONICS UNIT SUPPLIER CODE: V89954 ELECTRICAL EQUIP NUMBER: M00983 COMPONENT MAINT MANUAL REF: 31-51-12 USED ON: 284N1800-54 284N1800-76 284N1800-100	101102	1
60	285T0031-17	.PRINTED CIRCUIT ASSY- LDG CONFIGURATION WARNING ELECTRONICS UNIT SUPPLIER CODE: V89954 ELECTRICAL EQUIP NUMBER: M00983 COMPONENT MAINT MANUAL REF: 31-51-12 USED ON: 284N1800-54 284N1800-76 284N1800-100	101102	1
65	71-2LA	..EXTRACTOR- SUPPLIER CODE: V18915	101102	1
70	71-2RA	..EXTRACTOR- SUPPLIER CODE: V18915	101102	1
75	MS35214-14	..SCREW	101102	4
80	AN60PD4	..WASHER	101102	4
85	MS35338-135	..WASHER	101102	4
90	285T0032-8	..COVER ASSY- SUPPLIER CODE: V89954	101102	1
95	9537AB0440-3	...STANDOFF- SUPPLIER CODE: V06540	101102	4
100	285T0032-7	...COVER-PROTECTIVE SUPPLIER CODE: V89954	101102	1

MISSING ITEM NUMBERS NOT APPLICABLE

– ITEM NOT ILLUSTRATED

BOEING PROPRIETARY - Copyright © - Unpublished Work - See title page for details.

FIG ITEM	PART NUMBER	1 2 3 4 5 6 7 NOMENCLATURE	EFFECT FROM TO	UNITS PER ASSY
1B				
105	285T0385-6	.MODULE ASSY-WARNING ELECTRONICS UNIT BELL CHIMES SUPPLIER CODE: V89954 ELECTRICAL EQUIP NUMBER: M01000 COMPONENT MAINT MANUAL REF: 31-51-10 QUALIFIED I/W DATA: 285T0385-6 IS FULLY INTERCHANGEABLE WITH 285T0385-5 PROVIDED THE CUSTOMERS AIRPLANES ARE NOT FLYING UNDER CAA OR JAA CERTIFICATION, IN WHICH CASE THE 285T0385-5 IS PROHIBITED. USED ON: 284N1800-54 284N1800-100	101102	1
110	NAS1801-06-6	..SCREW	101102	4
115	AN960D6L	..WASHER	101102	4
120	MS35338-117	..WASHER	101102	4
125	69B46200-27	..STANDOFF	101102	4
130	285T0394-4	..STRAP ASSY- SUPPLIER CODE: V89954 OPTIONAL PART: 285T0394-9 V89954 285T0394-11 V89954	101102	1
130	285T0394-9	..STRAP ASSY- SUPPLIER CODE: V89954 OPTIONAL PART: 285T0394-4 V89954 285T0394-11 V89954	101102	1

MISSING ITEM NUMBERS NOT APPLICABLE

– ITEM NOT ILLUSTRATED

BOEING PROPRIETARY - Copyright © - Unpublished Work - See title page for details.

FIG ITEM	PART NUMBER	1 2 3 4 5 6 7 NOMENCLATURE	EFFECT FROM TO	UNITS PER ASSY
1B				
130	285T0394-11	..STRAP ASSY-	101102	1
		SUPPLIER CODE:		
		V89954		
		OPTIONAL PART:		
		285T0394-4		
		V89954		
		285T0394-9		
		V89954		
135	285T0394-1	..STRAP ASSY-	101102	1
		SUPPLIER CODE:		
		V89954		
		OPTIONAL PART:		
		285T0394-7		
		V89954		
135	285T0394-7	..STRAP ASSY-	101102	1
		SUPPLIER CODE:		
		V89954		
		OPTIONAL PART:		
		285T0394-1		
		V89954		
		ATTACHING PARTS		
- 140	MS35214-13	..SCREW	101102	4
- 145	NAS620-4	..WASHER	101102	4
- 150	BRH10A04	..NUT	101102	4
		SUPPLIER CODE:		
		V52828		
		SPECIFICATION NUMBER:		
		BACN10JC04		
		OPTIONAL PART:		
		NS202101-40		
		V80539		
		RMLH9075-40W		
		V72962		
		VN303A40		
		V92215		
		96-40		
		V80539		
		T6S440J		
		V11815		
		H10-04BAC		
		V15653		
		-------*-------		

MISSING ITEM NUMBERS NOT APPLICABLE

– ITEM NOT ILLUSTRATED

BOEING PROPRIETARY - Copyright © - Unpublished Work - See title page for details.

FIG ITEM	PART NUMBER	1 2 3 4 5 6 7 NOMENCLATURE	EFFECT FROM TO	UNITS PER ASSY
1B				
155	285T0034-26	.PRINTED CIRCUIT ASSY- SIREN, OWL, AURAL WARNING SUPPLIER CODE: V89954 ELECTRICAL EQUIP NUMBER: M00619 M00999 COMPONENT MAINT MANUAL REF: 31-51-15 QUALIFIED I/W DATA: 285T0034-23 INTERCHANGEABLE WITH 285T0034-26, 285T0034-30 OR 285T0034-31 EXCEPT TCAS SYSTEM OPERATION REQUIRES INSTALLATION OF 285T0034-26 OR 285T0034-30. USED ON: 284N1800-102	101102	2
155	285T0034-30	.PRINTED CIRCUIT ASSY- SIREN/OWL, AURAL WARNING SUPPLIER CODE: V89954 ELECTRICAL EQUIP NUMBER: M00619 M00999 COMPONENT MAINT MANUAL REF: 31-51-15 QUALIFIED I/W DATA: 285T0034-23 INTERCHANGEABLE WITH 285T0034-26, 285T0034-30 OR 285T0034-31 EXCEPT TCAS SYSTEM OPERATION REQUIRES INSTALLATION OF 285T0034-26 OR 285T0034-30.	101102	2

MISSING ITEM NUMBERS NOT APPLICABLE

– ITEM NOT ILLUSTRATED

BOEING PROPRIETARY - Copyright © - Unpublished Work - See title page for details.

FIG ITEM	PART NUMBER	1 2 3 4 5 6 7 NOMENCLATURE	EFFECT FROM TO	UNITS PER ASSY
1B				
155	285T0034-31	.PRINTED CIRCUIT ASSY- SIREN/OWL, AURAL WARNING SUPPLIER CODE: V89954 ELECTRICAL EQUIP NUMBER: M00619 M00999 COMPONENT MAINT MANUAL REF: 31-51-15 QUALIFIED I/W DATA: 285T0034-23 INTERCHANGEABLE WITH 285T0034-26, 285T0034-30 OR 285T0034-31 EXCEPT TCAS SYSTEM OPERATION REQUIRES INSTALLATION OF 285T0034-26 OR 285T0034-30.	101102	2
160	71-2LA	..EXTRACTOR- SUPPLIER CODE: V18915	101102	1
165	71-2RA	..EXTRACTOR- SUPPLIER CODE: V18915	101102	1
170	MS35214-14	..SCREW	101102	7
175	MS35338-40	..WASHER	101102	4
180	AN960PD4	..WASHER	101102	4
185	285T0032-8	..COVER ASSY- SUPPLIER CODE: V89954	101102	1
190	9537AB0440-3	...STANDOFF- SUPPLIER CODE: V06540	101102	4
195	285T0032-7	...COVER-PROTECTIVE SUPPLIER CODE: V89954	101102	1
200	285N0041-10	.PRINTED CIRCUIT ASSY- CLACKER WAILER SUPPLIER CODE: V89954 ELECTRICAL EQUIP NUMBER: M10421 M10422 COMPONENT MAINT MANUAL REF: 31-51-71 USED ON: 284N1800-54 284N1800-100	101102	2

MISSING ITEM NUMBERS NOT APPLICABLE

– ITEM NOT ILLUSTRATED

BOEING PROPRIETARY - Copyright © - Unpublished Work - See title page for details.

FIG ITEM	PART NUMBER	1 2 3 4 5 6 7 NOMENCLATURE	EFFECT FROM TO	UNITS PER ASSY
1B				
200	285N0041-6	.PRINTED CIRCUIT ASSY- CLACKER WAILER SUPPLIER CODE: V89954 ELECTRICAL EQUIP NUMBER: M10421 M10422 COMPONENT MAINT MANUAL REF: 31-51-71	101102	2
203	S906-10207-4	..LABEL-BAR CODE MANUFACTURER USED ON: 285N0041-10	101102	1
204	S906-10207-2	..LABEL-BAR CODE PN, SERIAL NO. AND MOD LEVEL USED ON: 285N0041-10	101102	3
205	71-2LA	..EXTRACTOR- SUPPLIER CODE: V18915	101102	1
210	71-2RA	..EXTRACTOR- SUPPLIER CODE: V18915	101102	1
215	MS35214-14	..SCREW	101102	7
220	MS35338-135	..WASHER	101102	4
225	AN960PD4	..WASHER	101102	4
235	285T0032-8	..COVER ASSY- SUPPLIER CODE: V89954	101102	1
240	9537AB0440-3	...STANDOFF- SUPPLIER CODE: V06540	101102	4
245	285T0032-7	...COVER-PROTECTIVE SUPPLIER CODE: V89954	101102	1
260	285N0042-12	.PRINTED CIRCUIT ASSY- WEU DECISION HEIGHT SUPPLIER CODE: V89954 ELECTRICAL EQUIP NUMBER: M10423 COMPONENT MAINT MANUAL REF: 31-51-72 USED ON: 284N1800-54	101102	1
265	71-2LA	..EXTRACTOR- SUPPLIER CODE: V18915	101102	1

MISSING ITEM NUMBERS NOT APPLICABLE

– ITEM NOT ILLUSTRATED

BOEING PROPRIETARY - Copyright © - Unpublished Work - See title page for details.

FIG ITEM	PART NUMBER	1 2 3 4 5 6 7 NOMENCLATURE	EFFECT FROM TO	UNITS PER ASSY
1B				
270	71-2RA	..EXTRACTOR- SUPPLIER CODE: V18915	101102	1
275	MS35214-14	..SCREW	101102	7
280	MS35338-135	..WASHER	101102	4
285	AN960PD4	..WASHER	101102	4
290	285T0032-8	..COVER ASSY- SUPPLIER CODE: V89954	101102	1
295	9537AB0440-3	...STANDOFF- SUPPLIER CODE: V06540	101102	4
300	285T0032-7	...COVER-PROTECTIVE SUPPLIER CODE: V89954	101102	1
305	285T0259-19	.PRINTED CIRCUIT ASSY- TAKEOFF CONFIGURATION SUPPLIER CODE: V89954 MISCELLANEOUS DATA: (285T0259-19, -20 AND -21 ARE ALL INTERCHANGEABLE) ELECTRICAL EQUIP NUMBER: M00620 COMPONENT MAINT MANUAL REF: 31-51-11 USED ON: 284N1800-102	101102	1
305	285T0259-17	.PRINTED CIRCUIT ASSY- TAKEOFF CONFIGURATION SUPPLIER CODE: V89954 ELECTRICAL EQUIP NUMBER: M00620 COMPONENT MAINT MANUAL REF: 31-51-11	101102	1
R 305	285T0259-20	.PRINTED CIRCUIT ASSY- TAKEOFF CONFIGURATION SUPPLIER CODE: V89954 MISCELLANEOUS DATA: 285T0259-19, -20 AND -21 ARE ALL INTERCHANGEABLE ELECTRICAL EQUIP NUMBER: M00620	101102	1

MISSING ITEM NUMBERS NOT APPLICABLE

– ITEM NOT ILLUSTRATED

BOEING PROPRIETARY - Copyright © - Unpublished Work - See title page for details.

	FIG ITEM	PART NUMBER	1 2 3 4 5 6 7 NOMENCLATURE	EFFECT FROM TO	UNITS PER ASSY
	1B				
R	305	285T0259-21	.PRINTED CIRCUIT ASSY-	101102	1
R			TAKEOFF CONFIGURATION		
R			SUPPLIER CODE:		
R			V89954		
R			MISCELLANEOUS DATA:		
R			285T0259-19, -20		
R			AND -21 ARE ALL		
R			INTERCHANGEABLE		
R			ELECTRICAL EQUIP NUMBER:		
R			M00620		
	310	71-2LA	..EXTRACTOR-	101102	1
			SUPPLIER CODE:		
			V18915		
	315	71-2RA	..EXTRACTOR-	101102	1
			SUPPLIER CODE:		
			V18915		
	320	MS35214-14	..SCREW	101102	4
	325	AN960PD4	..WASHER	101102	4
	330	MS35338-135	..WASHER	101102	4
	335	285T0032-8	..COVER ASSY-	101102	1
			SUPPLIER CODE:		
			V89954		
	340	9537AB0440-3	...STANDOFF-	101102	4
			SUPPLIER CODE:		
			V06540		
	345	285T0032-7	...COVER-PROTECTIVE	101102	1
			SUPPLIER CODE:		
			V89954		

MISSING ITEM NUMBERS NOT APPLICABLE

– ITEM NOT ILLUSTRATED

BOEING PROPRIETARY - Copyright © - Unpublished Work - See title page for details.

	FIG ITEM	PART NUMBER	1 2 3 4 5 6 7 NOMENCLATURE	EFFECT FROM TO	UNITS PER ASSY
	1B				
R	350	285T0035-202	.POWER SUPPLY-	101102	2
R			SUPPLIER CODE:		
R			V89954		
R			FUNCTIONAL DESCRIPTION:		
R			THE WARNING ELECTRONICS		
R			UNIT POWER SUPPLY UNIT		
R			(WEUPSU) IS ONE OF TWO		
R			POWER SUPPLY UNITS		
R			SUPPLYING REGULATED DC		
R			POWER TO THE WEU. EACH		
R			IS POWERED FROM		
R			INDEPENDENT, SINGLE		
R			PHASE 115V AC BUS.		
R			MISCELLANEOUS DATA:		
R			285T0035-202 MOD A		
R			REPLACES CUT AND		
R			JUMPERED PWA WITH A		
R			CLEAN PWA		
R			ELECTRICAL EQUIP NUMBER:		
R			M00616		
R			M00621		
R			COMPONENT MAINT MANUAL REF:		
R			31-51-20		
	350	285T0035-11	.POWER SUPPLY-	101102	2
			SUPPLIER CODE:		
			V89954		
			ELECTRICAL EQUIP NUMBER:		
			M00616		
			M00621		
			COMPONENT MAINT MANUAL REF:		
			31-51-20		
	350	285T0035-10	.POWER SUPPLY-	101102	2
			SUPPLIER CODE:		
			V89954		
			ELECTRICAL EQUIP NUMBER:		
			M00616		
			M00621		
			COMPONENT MAINT MANUAL REF:		
			31-51-20		
			QUALIFIED I/W DATA:		
			285T0035-201 MAY BE		
			REPLACED BY 285T0035-10,		
			BUT 285T0035-10 MAY NOT		
			BE REPLACED BY		
			285T0035-201.		

MISSING ITEM NUMBERS NOT APPLICABLE

— ITEM NOT ILLUSTRATED

BOEING PROPRIETARY - Copyright © - Unpublished Work - See title page for details.

FIG ITEM	PART NUMBER	1 2 3 4 5 6 7 NOMENCLATURE	EFFECT FROM TO	UNITS PER ASSY
1B				
350	285T0035-9	.POWER SUPPLY- SUPPLIER CODE: V89954 ELECTRICAL EQUIP NUMBER: M00616 M00621 COMPONENT MAINT MANUAL REF: 31-51-20 QUALIFIED I/W DATA: NEW81205 285T0035-201 285T0035-201 MAY BE REPLACED BY 285T0035-9, BUT, 285T0035-9 MAY NOT BE REPLACED BY 285T0035-201.	101102	2
352	NAS514P440-4P	..SCREW- USED ON: 285T0035-9 285T0035-10 285T0035-11	101102	18
353	NAS514P440-3P	..SCREW- USED ON: 285T0035-9 285T0035-10 285T0035-11	101102	1
355	MS24693C2	..SCREW- USED ON: 285T0035-201 285T0035-202	101102	4
360	MS21043-06	..NUT- USED ON: 285T0035-201 285T0035-202	101102	8
365	MS16624-1025	..RING-RETAINING USED ON: 285T0035-9 285T0035-10 285T0035-11 285T0035-201 285T0035-202	101102	1
370	285T0333-3	..SCREW- SUPPLIER CODE: V89954 USED ON: 285T0035-9 285T0035-10 285T0035-11 285T0035-201	101102	1

MISSING ITEM NUMBERS NOT APPLICABLE

– ITEM NOT ILLUSTRATED

BOEING PROPRIETARY - Copyright © - Unpublished Work - See title page for details.

FIG ITEM	PART NUMBER	1 2 3 4 5 6 7 NOMENCLATURE	EFFECT FROM TO	UNITS PER ASSY
1B				
370	285T0333-15	..SCREW- SUPPLIER CODE: V89954 USED ON: 285T0035-202	101102	1
375	RR2002-4B2	..GROMMET- SUPPLIER CODE: V57268 SPECIFICATION NUMBER: BACG20AF4B2 OPTIONAL PART: G6940-4B2 V75345 SZ6924-4B2 V95272 701-4B2 V07096 E4B2 V60980 H4B2 V60980 USED ON: 285T0035-9 285T0035-10 285T0035-11 285T0035-201 285T0035-202	101102	1
385	BACW10P9AL	..WASHER- USED ON: 285T0035-9 285T0035-10 285T0035-11 285T0035-201 285T0035-202	101102	2
390	NAS1291C4M	..NUT- USED ON: 285T0035-9 285T0035-10 285T0035-11 285T0035-201 285T0035-202	101102	2
395	285T0381-1	..COVER- SUPPLIER CODE: V89954 USED ON: 285T0035-201 285T0035-202	101102	1

MISSING ITEM NUMBERS NOT APPLICABLE

— ITEM NOT ILLUSTRATED

BOEING PROPRIETARY - Copyright © - Unpublished Work - See title page for details.

FIG ITEM	PART NUMBER	1 2 3 4 5 6 7 NOMENCLATURE	EFFECT FROM TO	UNITS PER ASSY
1B				
395	285T0339-12	..COVER-	101102	1
		SUPPLIER CODE:		
		V89954		
		OPTIONAL PART:		
		285T0339-18		
		V89954		
		USED ON:		
		285T0035-9		
		285T0035-10		
		285T0035-11		
395	285T0339-18	..SHIELD-	101102	1
		SUPPLIER CODE:		
		V89954		
		OPTIONAL PART:		
		285T0339-12		
		V89954		
		USED ON:		
		285T0035-9		
		285T0035-10		
		285T0035-11		
- 801	286N1451-353	WIRE BUNDLE ASSY	101101	RF
- 801	286N1451-354	WIRE BUNDLE ASSY	102102	RF

MISSING ITEM NUMBERS NOT APPLICABLE

- ITEM NOT ILLUSTRATED

BOEING PROPRIETARY - Copyright © - Unpublished Work - See title page for details.

FIG ITEM	PART NUMBER	1 2 3 4 5 6 7 NOMENCLATURE	EFFECT FROM TO	UNITS PER ASSY
1B				
805	300052-001	.CONNECTOR-	101102	6
		SUPPLIER CODE:		
		V0D9V3		
		SPECIFICATION NUMBER:		
		BACC65L66		
		OPTIONAL PART:		
		200620-01		
		V16512		
		300052-001		
		V03877		
		192-366-0010		
		V26742		
		S1009-00833		
		V03877		
		ELECTRICAL EQUIP NUMBER:		
		D00903		
		D00113		
		D00115		
		D00901		
		D00117		
		D00595		
		WIRING DIAGRAM REF:		
		315133		
		315121		
		315132		
		315131		
		315141		
		315142		

MISSING ITEM NUMBERS NOT APPLICABLE

– ITEM NOT ILLUSTRATED

BOEING PROPRIETARY - Copyright © - Unpublished Work - See title page for details.

FIG ITEM	PART NUMBER	1 2 3 4 5 6 7 NOMENCLATURE	EFFECT FROM TO	UNITS PER ASSY
1B				
810	300052-001	.CONNECTOR-	101102	3
		SUPPLIER CODE:		
		V0D9V3		
		SPECIFICATION NUMBER:		
		BACC65L66		
		OPTIONAL PART:		
		200620-01		
		V16512		
		300052-001		
		V03877		
		192-366-0010		
		V26742		
		S1009-00833		
		V03877		
		ELECTRICAL EQUIP NUMBER:		
		D00905		
		D00815		
		D00907		
		WIRING DIAGRAM REF:		
		315135		
		315136		
		315134		
815	M24308-2-32	.RECEPTACLE-	101102	2
		ELECTRICAL EQUIP NUMBER:		
		D00105		
		D00107		

MISSING ITEM NUMBERS NOT APPLICABLE

— ITEM NOT ILLUSTRATED

BOEING PROPRIETARY - Copyright © - Unpublished Work - See title page for details.

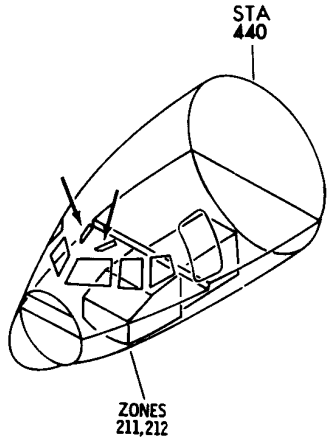

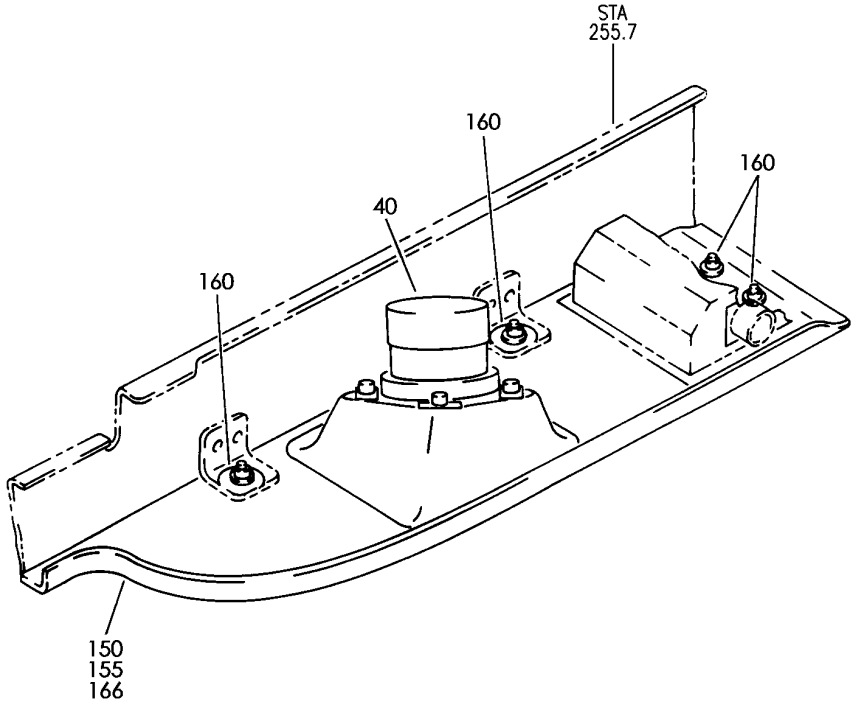

Y 31511105 REV 243

PANEL INSTL-MAP LIGHT AND SPKR CAPT AND FIRST OFFICER (INDICATING AND RECORDING ONLY)
FIGURE 5

BOEING PROPRIETARY - Copyright © - Unpublished Work - See title page for details.

FIG ITEM	PART NUMBER	1 2 3 4 5 6 7 NOMENCLATURE	EFFECT FROM TO	UNITS PER ASSY
5		PANEL INSTL-MAP LIGHT AND SPKR CAPT AND FIRST OFFICER (INDICATING AND RECORDING ONLY)	011106 108120 504903	
- 1	232N5030-1	PANEL INSTL-MAP LIGHT AND SPKR CAPT (INDICATING RECORDING ONLY) POSITION DATA: LH FOR NHA/OTHER SYS DET SEE: 25-10-00-05	011017	RF
- 1	232N5030-5	PANEL INSTL-MAP LIGHT AND SPKR CAPT (INDICATING RECORDING ONLY) POSITION DATA: LH FOR NHA/OTHER SYS DET SEE: 25-10-00-05	018100	RF
- 1	232N5030-11	PANEL INSTL-MAP LIGHT AND SPKR CAPT (INDICATING RECORDING ONLY) POSITION DATA: LH FOR NHA/OTHER SYS DET SEE: 25-10-00-10	101101	RF
- 1	232N5030-15	PANEL INSTL-MAP LIGHT AND SPKR CAPT (INDICATING RECORDING ONLY) POSITION DATA: LH FOR NHA/OTHER SYS DET SEE: 25-10-00-10	102102 504903	RF
- 1	232N5030-23	PANEL INSTL-MAP LIGHT AND SPKR CAPT (INDICATING RECORDING ONLY) POSITION DATA: LH FOR NHA/OTHER SYS DET SEE: 25-10-00-10	108120	RF
- 1	MODREF7073	PANEL INSTL-MAP LIGHT AND SPKR CAPT (INDICATING RECORDING ONLY) MODULE NUMBER: 232N5030-23 REV A POSITION DATA: LH FOR OTHER SYS DETAILS SEE: 23-00-51-02	103103	1

MISSING ITEM NUMBERS NOT APPLICABLE

- ITEM NOT ILLUSTRATED

BOEING PROPRIETARY - Copyright © - Unpublished Work - See title page for details.

FIG ITEM	PART NUMBER	1 2 3 4 5 6 7 NOMENCLATURE	EFFECT FROM TO	UNITS PER ASSY
5				
- 1	MODREF27440	PANEL INSTL-MAP LIGHT AND SPKR CAPT (INDICATING RECORDING ONLY) MODULE NUMBER: 232N5030-23 REV B POSITION DATA: LH FOR OTHER SYS DETAILS SEE: 23-00-51-02	104106	1
- 5	232N5030-2	PANEL INSTL-MAP LIGHT AND SPKR FIRST OFFICER (INDICATING AND RECORDING ONLY) POSITION DATA: RH FOR NHA/OTHER SYS DET SEE: 25-10-00-05	011017	RF
- 5	232N5030-6	PANEL INSTL-MAP LIGHT AND SPKR FIRST OFFICER (INDICATING AND RECORDING ONLY) POSITION DATA: RH FOR NHA/OTHER SYS DET SEE: 25-10-00-05	018100	RF
- 5	232N5030-12	PANEL INSTL-MAP LIGHT AND SPKR FIRST OFFICER (INDICATING AND RECORDING ONLY) POSITION DATA: RH FOR NHA/OTHER SYS DET SEE: 25-10-00-10	101101	RF
- 5	232N5030-16	PANEL INSTL-MAP LIGHT AND SPKR FIRST OFFICER (INDICATING AND RECORDING ONLY) POSITION DATA: RH FOR NHA/OTHER SYS DET SEE: 25-10-00-10	102102 504903	RF
- 5	232N5030-24	PANEL INSTL-MAP LIGHT AND SPKR FIRST OFFICER (INDICATING AND RECORDING ONLY) POSITION DATA: RH FOR NHA/OTHER SYS DET SEE: 25-10-00-10	108120	RF

MISSING ITEM NUMBERS NOT APPLICABLE

- ITEM NOT ILLUSTRATED

BOEING PROPRIETARY - Copyright © - Unpublished Work - See title page for details.

FIG ITEM	PART NUMBER	1 2 3 4 5 6 7 NOMENCLATURE	EFFECT FROM TO	UNITS PER ASSY
5				
- 5	MODREF7155	PANEL INSTL-MAP LIGHT AND SPKR FIRST OFFICER (INDICATING AND RECORDING ONLY) MODULE NUMBER: 232N5030-24 REV A POSITION DATA: RH FOR OTHER SYS DETAILS SEE: 23-00-51-02	103103	1
- 5	MODREF27441	PANEL INSTL-MAP LIGHT AND SPKR FIRST OFFICER (INDICATING AND RECORDING ONLY) MODULE NUMBER: 232N5030-24 REV B POSITION DATA: RH FOR OTHER SYS DETAILS SEE: 23-00-51-02	104106	1
10	232N5030-3	.PANEL ASSY- POSITION DATA: LH	011017	1
10	232N5030-7	.PANEL ASSY- POSITION DATA: LH	018100	1
10	232N5030-9	.PANEL ASSY- POSITION DATA: LH	101101	1
10	232N5030-13	.PANEL ASSY- POSITION DATA: LH	102102 504903	1
10	232N5030-21	.PANEL ASSY- POSITION DATA: LH	103106 108120	1
- 15	232N5030-4	.PANEL ASSY- POSITION DATA: RH	011017	1
- 15	232N5030-8	.PANEL ASSY- POSITION DATA: RH	018100	1
- 15	232N5030-10	.PANEL ASSY- POSITION DATA: RH	101101	1
- 15	232N5030-14	.PANEL ASSY- POSITION DATA: RH	102102 504903	1

MISSING ITEM NUMBERS NOT APPLICABLE

- ITEM NOT ILLUSTRATED

BOEING PROPRIETARY - Copyright © - Unpublished Work - See title page for details.

FIG ITEM	PART NUMBER	1 2 3 4 5 6 7 NOMENCLATURE	EFFECT FROM TO	UNITS PER ASSY
5				
- 15	232N5030-22	.PANEL ASSY- POSITION DATA: RH ATTACHING PARTS	103106 108120	1
- 20	FCM10F8CPL11BG	.SCREW- SUPPLIER CODE: V12324	011106 108120 504903	4
- 25	FCM10F10CPL11BG	.SCREW- SUPPLIER CODE: V12324	011106 108120 504903	4
- 30	BACW10P242L	.WASHER	011106 108120 504903	4
- 35	NAS1149C0432R	.WASHER	011106 108120 504903	4
		-------*-------		
40	15-0714-4	..LIGHT ASSY-MAP SUPPLIER CODE: V72914 SPECIFICATION NUMBER: S232W500-4 ELECTRICAL EQUIP NUMBER: L277 L278 COMPONENT MAINT MANUAL REF: 33-30-14 OPTIONAL PART: 81000-13701 VS5006 FOR DETAILS SEE: 33-14-51-50	011106 108120 504903	1
40	15-0714-1	..LIGHT ASSY-MAP SUPPLIER CODE: V72914 SPECIFICATION NUMBER: S232W500-1 ELECTRICAL EQUIP NUMBER: L277 L278 COMPONENT MAINT MANUAL REF: 33-30-14 OPTIONAL PART: 81000-13701 VS5006 FOR DETAILS SEE: 33-14-51-50	011106 108120 504903	1

MISSING ITEM NUMBERS NOT APPLICABLE

- ITEM NOT ILLUSTRATED

BOEING PROPRIETARY - Copyright © - Unpublished Work - See title page for details.

FIG ITEM	PART NUMBER	1 2 3 4 5 6 7 NOMENCLATURE	EFFECT FROM TO	UNITS PER ASSY
5				
40	81000-13701	..LIGHT ASSY-MAP SUPPLIER CODE: VS5006 SPECIFICATION NUMBER: S232T500-1 ELECTRICAL EQUIP NUMBER: L277 L278 OPTIONAL PART: 15-0714-1 V72914 15-0714-4 V72914 FOR DETAILS SEE: 33-14-51-50	011106 108120 504903	1
42	BACS12CK3U10	..SCREW	102102 504903	4
150	232N5031-3	..PANEL ASSY- POSITION DATA: CAPTAIN USED ON: 232N5030-3 232N5030-7	011100	1
150	232N5031-7	..PANEL ASSY- POSITION DATA: CAPTAIN USED ON: 232N5030-9	101102 504903	1
150	232N5031-11	..PANEL ASSY- POSITION DATA: CAPTAIN USED ON: 232N5030-17 232N5030-21	103106 108120	1
155	232N5031-4	..PANEL ASSY- POSITION DATA: FIRST OFFICER USED ON: 232N5030-4 232N5030-8	011100	1
155	232N5031-8	..PANEL ASSY- POSITION DATA: FIRST OFFICER USED ON: 232N5030-10	101102 504903	1

MISSING ITEM NUMBERS NOT APPLICABLE

– ITEM NOT ILLUSTRATED

BOEING PROPRIETARY - Copyright © - Unpublished Work - See title page for details.

FIG ITEM	PART NUMBER	1 2 3 4 5 6 7 NOMENCLATURE	EFFECT FROM TO	UNITS PER ASSY
5				
155	232N5031-12	..PANEL ASSY- POSITION DATA: FIRST OFFICER USED ON: 232N5030-18 232N5030-22	103106 108120	1
160	MF53050-3DL	...NUTPLATE SUPPLIER CODE: V15653 SPECIFICATION NUMBER: BACN10JN3CM OPTIONAL PART: BRFM20C3M V52828 MF1001-3BAC V15653 NS103218SE02 V80539 VN252D02 V92215 109F9201M3 V72962 T8125C3C V11815 ATTACHING PARTS	011106 108120 504903	4
- 165	BACR15BA3A	...RIVET- SIZE DETERMINED ON INSTL. -------*-------	011106 108120 504903	8
166	232N5031-9	...PANEL- POSITION DATA: CAPT USED ON: 232N5031-7	101102 504903	1
166	232N5031-5	...PANEL- POSITION DATA: CAPT USED ON: 232N5031-3	011100	1
166	232N5031-13	...PANEL- POSITION DATA: CAPT USED ON: 232N5031-11	103106 108120	1
- 167	232N5031-10	...PANEL- POSITION DATA: FIRST OFFICER USED ON: 232N5031-8	101102 504903	1

MISSING ITEM NUMBERS NOT APPLICABLE

- ITEM NOT ILLUSTRATED

BOEING PROPRIETARY - Copyright © - Unpublished Work - See title page for details.

FIG ITEM	PART NUMBER	1 2 3 4 5 6 7 NOMENCLATURE	EFFECT FROM TO	UNITS PER ASSY
5				
- 167	232N5031-6	...PANEL- POSITION DATA: FIRST OFFICER USED ON: 232N5031-4	011100	1
- 167	232N5031-14	...PANEL- POSITION DATA: FIRST OFFICER USED ON: 232N5031-12	103106 108120	1

MISSING ITEM NUMBERS NOT APPLICABLE

- ITEM NOT ILLUSTRATED

BOEING PROPRIETARY - Copyright © - Unpublished Work - See title page for details.

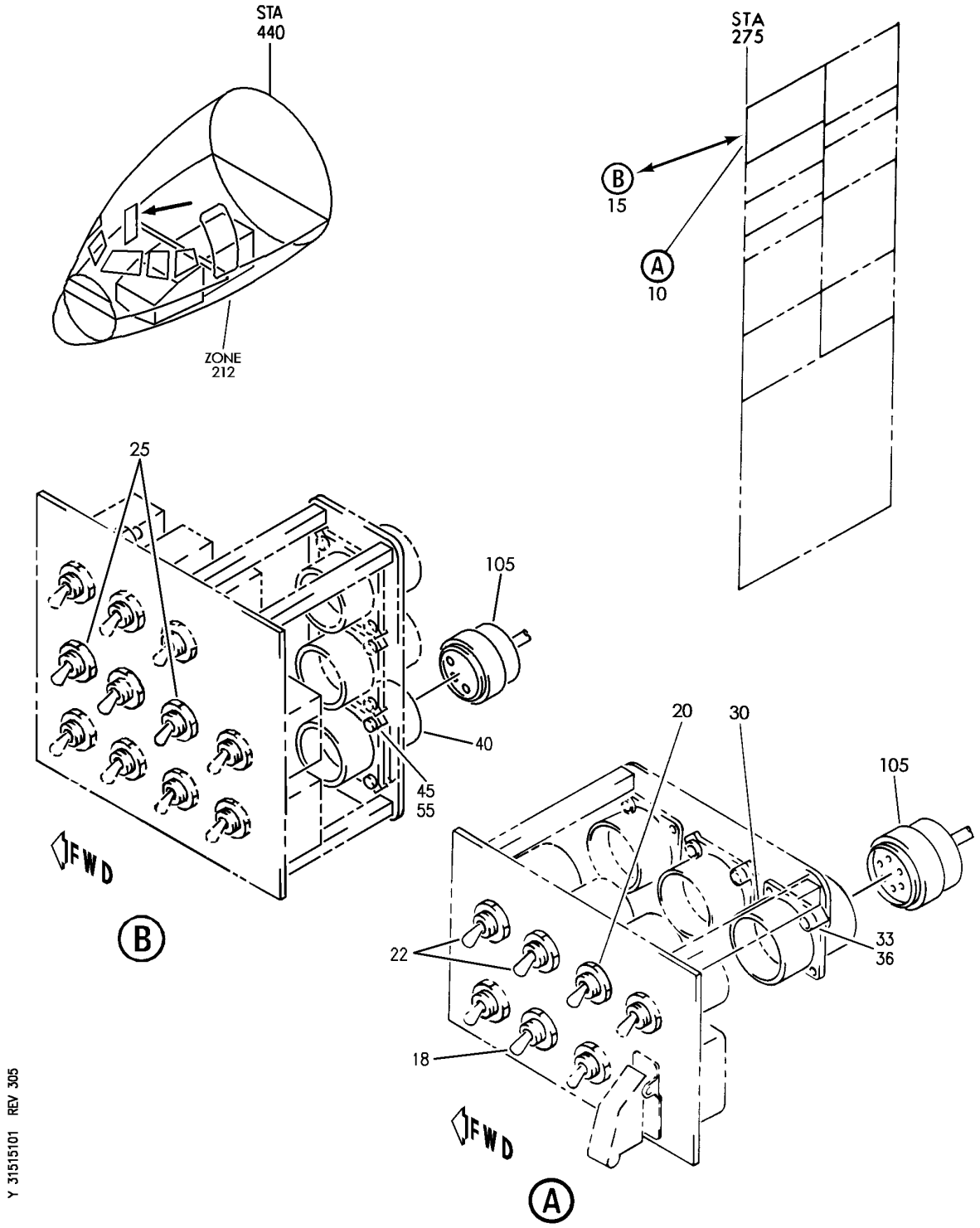

PANEL INSTL-P61 R SIDEWALL (WARNING SYSTEM ONLY)
FIGURE 1

BOEING PROPRIETARY - Copyright © - Unpublished Work - See title page for details.

FIG ITEM	PART NUMBER	1 2 3 4 5 6 7 NOMENCLATURE	EFFECT FROM TO	UNITS PER ASSY
1				
		PANEL INSTL-P61 R SIDEWALL	002004	
		(WARNING SYSTEM ONLY)	006999	
- 1	233N7401-1	PANEL INSTL-P61 SIDEWALL	002004	RF
		(WARNING SYSTEM ONLY)	006100	
		POSITION DATA:	107107	
		R	121503	
		VARIABLE DRAWING REF:	904999	
		233N7401-5004		
		233N7401-5005		
		233N7401-5036		
		233N7401-5038		
		233N7401-5042		
		FOR NHA/OTHER SYS DET SEE:		
		25-10-00-05A		
- 2	233N7403-158	PANEL INSTL-P61 SIDEWALL	108120	RF
		(WARNING SYSTEM ONLY)		
		POSITION DATA:		
		R		
		FOR NHA/OTHER SYS DET SEE:		
		25-10-00-15B		
- 3	233N7403-28	PANEL INSTL-P61 SIDEWALL	101101	RF
		(WARNING SYSTEM ONLY)		
		POSITION DATA:		
		R		
		FOR NHA/OTHER SYS DET SEE:		
		25-10-00-15B		
- 3	233N7403-117	PANEL INSTL-P61 SIDEWALL	504903	RF
		(WARNING SYSTEM ONLY)		
		POSITION DATA:		
		R		
		FOR NHA/OTHER SYS DET SEE:		
		25-10-00-15B		
- 4	233N7403-128	PANEL INSTL-P61 SIDEWALL	102102	RF
		(WARNING SYSTEM ONLY)		
		POSITION DATA:		
		R		
		FOR NHA/OTHER SYS DET SEE:		
		25-10-00-15B		

MISSING ITEM NUMBERS NOT APPLICABLE

- ITEM NOT ILLUSTRATED

BOEING PROPRIETARY - Copyright © - Unpublished Work - See title page for details.

FIG ITEM	PART NUMBER	1 2 3 4 5 6 7 NOMENCLATURE	EFFECT FROM TO	UNITS PER ASSY
1				
- 8	MODREF33342	PANEL INSTL- (WARNING SYSTEM ONLY) MODULE NUMBER: 233N7403-171 REV A FOR OTHER SYS DETAILS SEE: 11-32-01-98 21-58-51-04 22-21-51-01 23-41-52-01 24-22-73-02 26-18-53-02 26-21-52-01 26-22-52-01 26-23-52-03 27-23-51-02 28-41-51-04 29-22-52-01 30-11-52-01 30-41-51-04 31-14-16-87 31-31-04-01 31-41-53-01 34-12-54-01 34-21-51-02 34-46-51-05 34-61-53-03	103106	1
10	233N7501-23	.PANEL ASSY-TEST SUPPLIER CODE: V89954 NOT APPROVED FOR ETOPS. SB DATA FROM A CMM: PRE 233N7501-31-01 PRE 233N7501-31-03 ELECTRICAL EQUIP NUMBER: M10398 COMPONENT MAINT MANUAL REF: 31-51-61	950951	RF
10	233N7501-23	.PANEL ASSY-TEST SUPPLIER CODE: V89954 NOT APPROVED FOR ETOPS. SB DATA FROM A CMM: PRE 233N7501-31-01 PRE 233N7501-31-03 ELECTRICAL EQUIP NUMBER: M10398 COMPONENT MAINT MANUAL REF: 31-51-61	504903	RF

MISSING ITEM NUMBERS NOT APPLICABLE

- ITEM NOT ILLUSTRATED

BOEING PROPRIETARY - Copyright © - Unpublished Work - See title page for details.

FIG ITEM	PART NUMBER	1 2 3 4 5 6 7 NOMENCLATURE	EFFECT FROM TO	UNITS PER ASSY
1				
10	233N7501-35	.PANEL ASSY-TEST SUPPLIER CODE: V89954 ELECTRICAL EQUIP NUMBER: M10398 COMPONENT MAINT MANUAL REF: 31-51-61 POST SERVICE BULLETIN: 24-0048	107107 904949 952952	RF
10	233N7501-36	.PANEL ASSY-TEST SUPPLIER CODE: V89954 SB DATA FROM A CMM: POST 233N7501-31-03 ELECTRICAL EQUIP NUMBER: M10398 COMPONENT MAINT MANUAL REF: 31-51-61 QUALIFIED I/W DATA: 233N7501-36 CAN REPLACE 233N7501-35,BUT 233N7501-35 CANNOT REPLACE 233N7501-36 IF VICKER HMG, 520850 OR 3022008-000 IS INSTALLED.	002004 006100 121503 953999	RF
10	233N7501-36	.PANEL ASSY-TEST SUPPLIER CODE: V89954 SB DATA FROM A CMM: POST 233N7501-31-03 ELECTRICAL EQUIP NUMBER: M10398 COMPONENT MAINT MANUAL REF: 31-51-61 QUALIFIED I/W DATA: 233N7501-36 CAN REPLACE 233N7501-35,BUT 233N7501-35 CANNOT REPLACE 233N7501-36 IF VICKER HMG, 520850 OR 3022008-000 IS INSTALLED.	101102 108120	RF

MISSING ITEM NUMBERS NOT APPLICABLE

– ITEM NOT ILLUSTRATED

BOEING PROPRIETARY - Copyright © - Unpublished Work - See title page for details.

FIG ITEM	PART NUMBER	1 2 3 4 5 6 7 NOMENCLATURE	EFFECT FROM TO	UNITS PER ASSY
1				
15	233N7501-41	.PANEL ASSY-TEST SUPPLIER CODE: V89954 ELECTRICAL EQUIP NUMBER: M10398 COMPONENT MAINT MANUAL REF: 31-51-61	103106	RF
20	64AT22-7	..SWITCH SUPPLIER CODE: V91929 SPECIFICATION NUMBER: BACS30EM44 OPTIONAL PART: 64AT11-7 V91929 A3-1110-04-1 V81640 A3-1110-04 V81640	002004 006102 107999	1
22	64AT22-7	..SWITCH SUPPLIER CODE: V91929 SPECIFICATION NUMBER: BACS30EM44 OPTIONAL PART: 64AT11-7 V91929 A3-1110-04-1 V81640 A3-1110-04 V81640	002004 006102 107999	2
25	64AT22-7	..SWITCH-TG SUPPLIER CODE: V91929	103106	3
30	BACC45FN20-41P8	..CONNECTOR- ELECTRICAL EQUIP NUMBER: J00003 ATTACHING PARTS	002004 006102 107999	1
33	NAS1801-04-5	..SCREW	002004 006102 107999	2

MISSING ITEM NUMBERS NOT APPLICABLE

– ITEM NOT ILLUSTRATED

BOEING PROPRIETARY - Copyright © - Unpublished Work - See title page for details.

FIG ITEM	PART NUMBER	1 2 3 4 5 6 7 NOMENCLATURE	EFFECT FROM TO	UNITS PER ASSY
1				
36	K19798-04	..NUT	002004	2
		SUPPLIER CODE:	006102	
		V15653	107999	
		SPECIFICATION NUMBER:		
		BACN10NW1		
		OPTIONAL PART:		
		RMA4812-160-40		
		V72962		
		293162		
		V60119		
		-------*-------		
40	BACC45FN20-41P8	..CONNECTOR-	103106	1
		ELECTRICAL EQUIP NUMBER:		
		J00003		
		ATTACHING PARTS		
45	MS51957-14	..SCREW	103106	2
55	K19798-04	..NUT	103106	2
		SUPPLIER CODE:		
		V15653		
		SPECIFICATION NUMBER:		
		BACN10NW1		
		OPTIONAL PART:		
		RMA4812-160-40		
		V72962		
		293162		
		V60119		
		-------*-------		
- 100	286N2078-003	WIRE BUNDLE ASSY-	121503	RF
			904949	
- 100	286N2078-004	WIRE BUNDLE ASSY	107107	RF
- 100	286N2078-005	WIRE BUNDLE ASSY-	002004	RF
			006100	
			950999	
- 102	286N2078-328	WIRE BUNDLE ASSY	504903	RF
- 102	286N2078-330	WIRE BUNDLE ASSY	101102	RF
- 102	286N2078-331	WIRE BUNDLE ASSY	108120	RF
- 103	286N2078-601	WIRE BUNDLE ASSY	103106	RF
105	BACC45FT20A41S8	.CONNECTOR-	002004	1
		ELECTRICAL EQUIP NUMBER:	006999	
		D03706		
		WIRING DIAGRAM REF:		
		315142		

MISSING ITEM NUMBERS NOT APPLICABLE

- ITEM NOT ILLUSTRATED

BOEING PROPRIETARY - Copyright © - Unpublished Work - See title page for details.

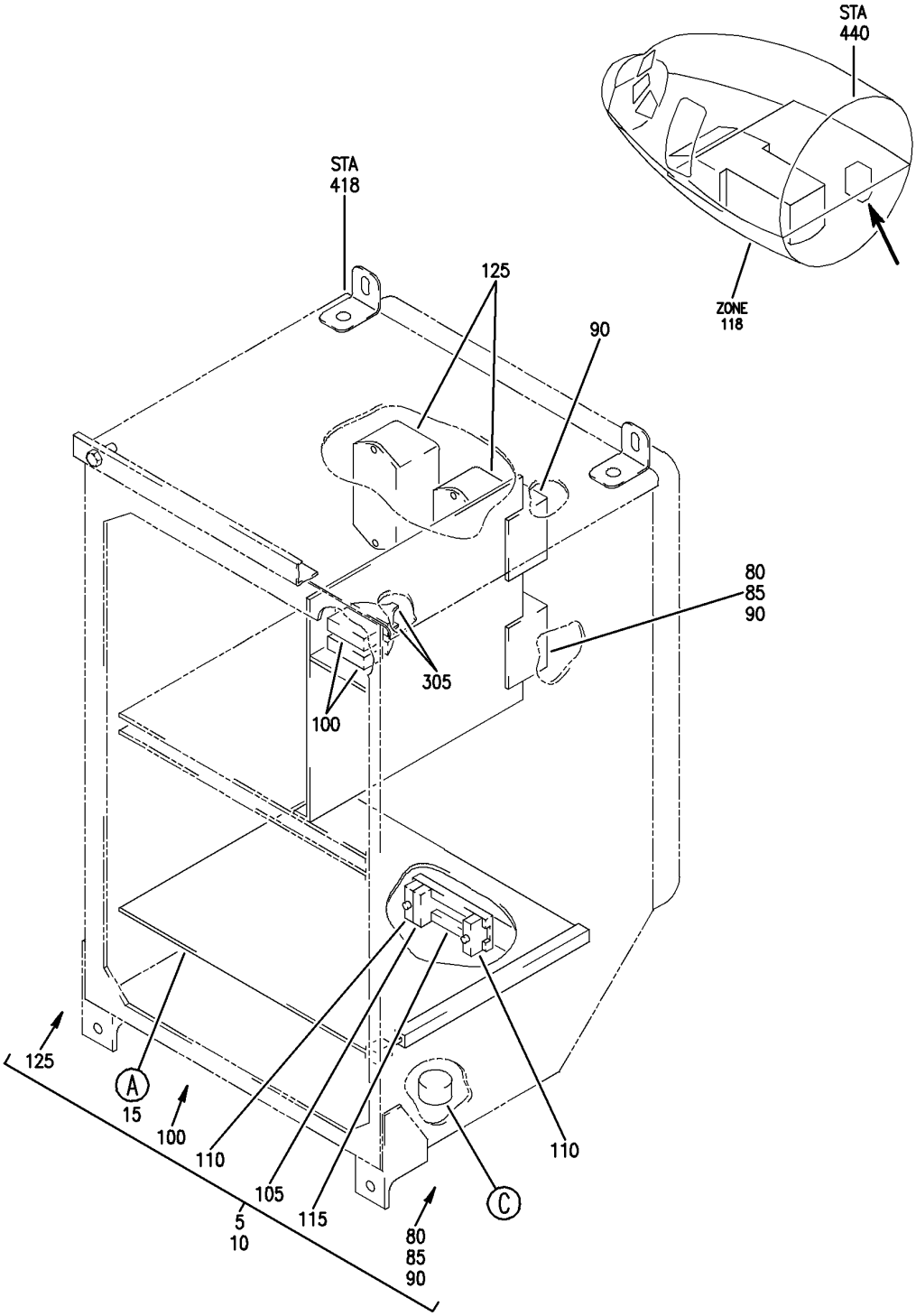

FILE ASSY-P51 (WARNING SYSTEM ONLY)
FIGURE 3 (SHEET 1)

BOEING PROPRIETARY - Copyright © - Unpublished Work - See title page for details.

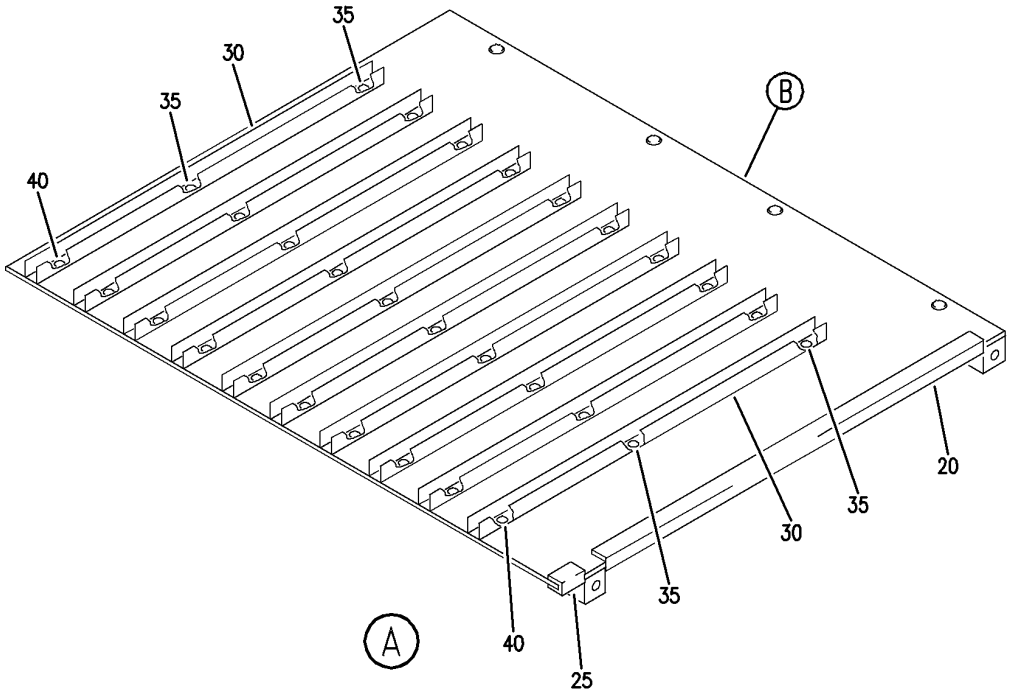

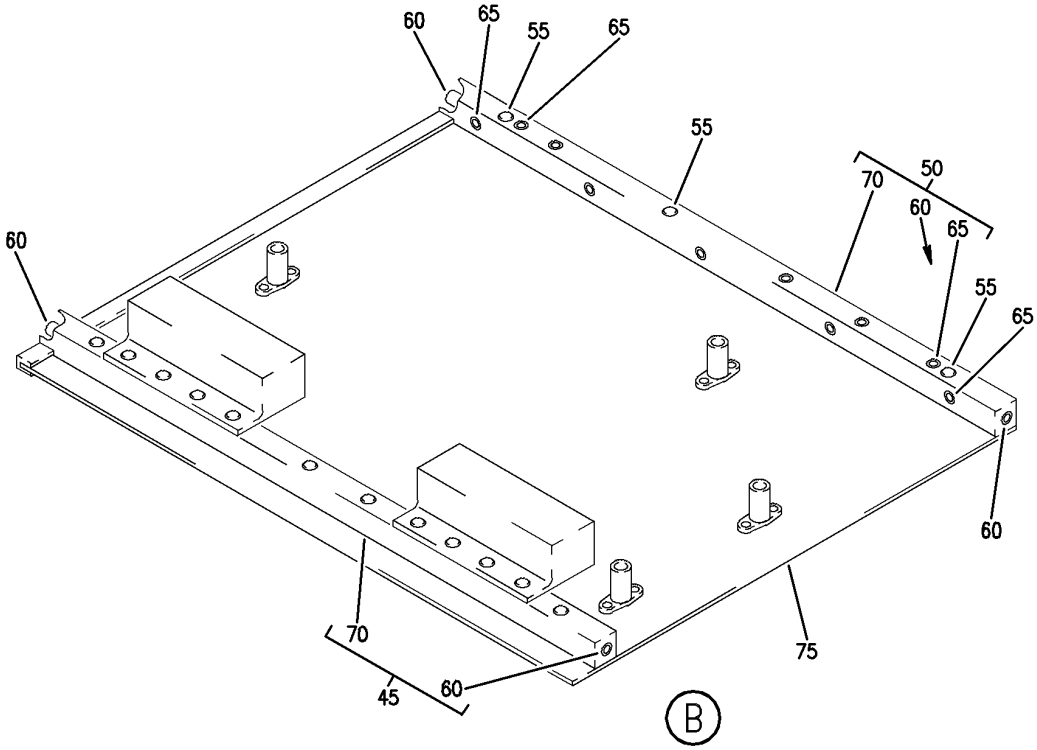

Y 31515103 SHT 2 REV 251

FILE ASSY-P51 (WARNING SYSTEM ONLY)
FIGURE 3 (SHEET 2)

BOEING PROPRIETARY - Copyright © - Unpublished Work - See title page for details.

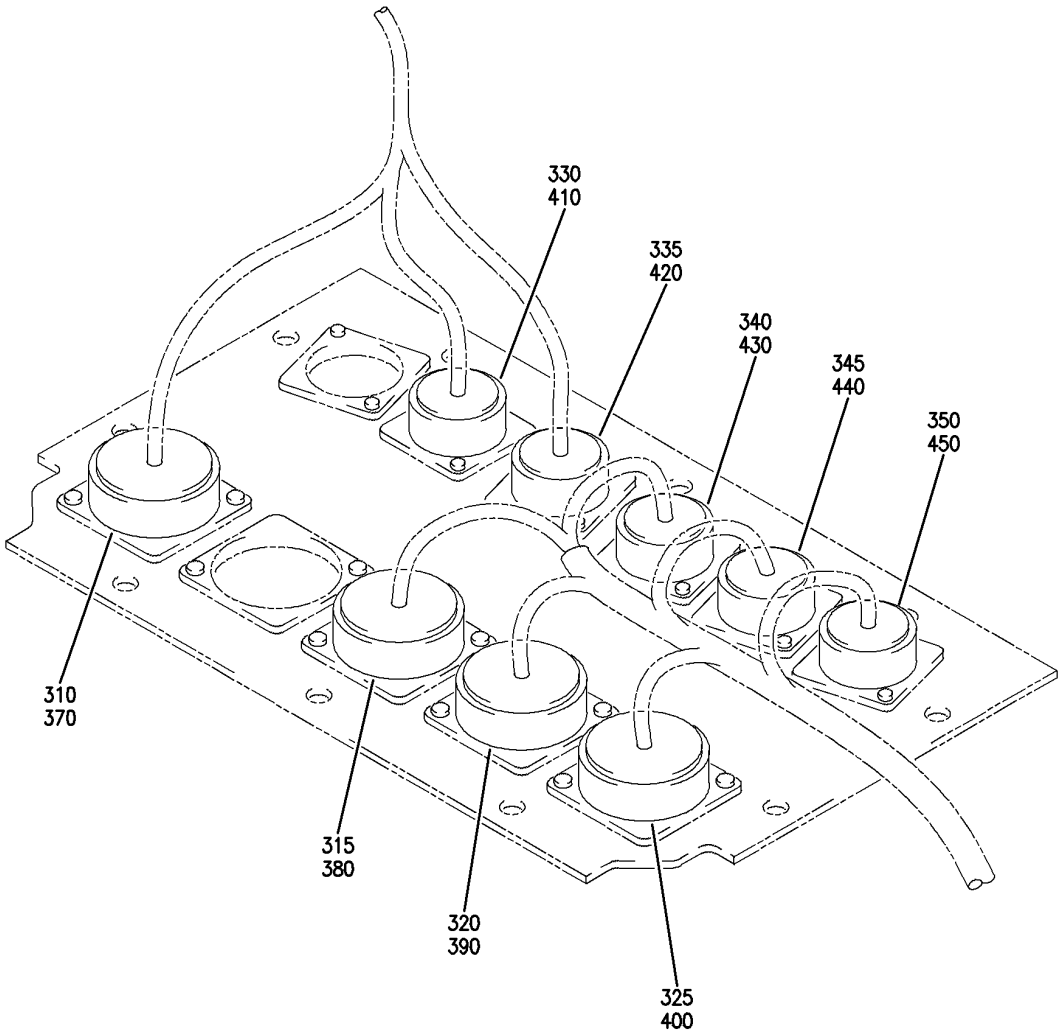

Y 31515103 SHT 3 REV 251

FILE ASSY-P51 (WARNING SYSTEM ONLY)
FIGURE 3 (SHEET 3)

BOEING PROPRIETARY - Copyright © - Unpublished Work - See title page for details.

FIG ITEM	PART NUMBER	1 2 3 4 5 6 7 NOMENCLATURE	EFFECT FROM TO	UNITS PER ASSY
3		FILE ASSY-P51 (WARNING SYSTEM ONLY)	002004 006101 107107 121503 904999	
- 1	285N0005-16	FILE ASSY-P51 (WARNING SYSTEM ONLY) SUPPLIER CODE: V89954 FOR NHA/OTHER SYS DET SEE: 53-11-63-03	002004 006008 121503 904949	RF
- 1	285N0005-17	FILE ASSY-P51 (WARNING SYSTEM ONLY) SUPPLIER CODE: V89954 FOR NHA/OTHER SYS DET SEE: 53-11-63-03	107107	RF
- 1	285N0005-20	FILE ASSY-P51 (WARNING SYSTEM ONLY) SUPPLIER CODE: V89954 REWORKED BY SB: 34-0200 FOR NHA/OTHER SYS DET SEE: 53-11-63-03	950952	RF
- 1	285N0005-22	FILE ASSY-P51 (WARNING SYSTEM ONLY) SUPPLIER CODE: V89954 VARIABLE DRAWING REF: 285N0005-23 285N0005-5006 285N0005-5007 FOR NHA/OTHER SYS DET SEE: 53-11-63-03	009100 953999	RF
- 2	285N0005-49	FILE ASSY-P51 (WARNING SYSTEM ONLY) SUPPLIER CODE: V89954 FOR NHA/OTHER SYS DET SEE: 53-11-63-03A	101101	RF
5	285N0005-10	.CARDGUIDE ASSY- SUPPLIER CODE: V89954	950952	RF
5	285N0005-12	.CARDGUIDE ASSY- SUPPLIER CODE: V89954	002004 006100 121503 904949 953999	RF

MISSING ITEM NUMBERS NOT APPLICABLE

- ITEM NOT ILLUSTRATED

BOEING PROPRIETARY - Copyright © - Unpublished Work - See title page for details.

FIG ITEM	PART NUMBER	1 2 3 4 5 6 7 NOMENCLATURE	EFFECT FROM TO	UNITS PER ASSY
3				
5	285N0005-14	.CARDGUIDE ASSY-	107107	RF
		SUPPLIER CODE:		
		V89954		
5	285N0005-50	.CARDGUIDE ASSY-	101101	RF
		SUPPLIER CODE:		
		V89954		
100	XD4N	..RELAY-DPDT .5 AMP	002004	2
		SUPPLIER CODE:	006008	
		V58657	101101	
		ELECTRICAL EQUIP NUMBER:	107107	
		K10343	121503	
		K10344	904952	
		OPTIONAL PART:		
		XD4N103		
		V80183		
100	XD4N103	..RELAY-	002004	2
		SUPPLIER CODE:	006008	
		V80183	101101	
		ELECTRICAL EQUIP NUMBER:	107107	
		K10343	121503	
		K10344	904952	
		OPTIONAL PART:		
		XD4N		
		V58657		
105	H21-1	..SPACER	002004	1
		SUPPLIER CODE:	006101	
		V34941	107107	
		SPECIFICATION NUMBER:	121503	
		BACS18AR1	904949	
		OPTIONAL PART:	953999	
		FAB276A		
		V15805		
		YHLZ1C2		
		V09922		
110	BACC49A1	..CLAMP	002004	2
		SUPPLIER CODE:	006101	
		V09922	107107	
		SPECIFICATION NUMBER:	121503	
		BACC49A1	904949	
		OPTIONAL PART:	953999	
		FAB278		
		V15805		
		H28-1		
		V34941		
		UP103		
		V6E102		

MISSING ITEM NUMBERS NOT APPLICABLE

— ITEM NOT ILLUSTRATED

BOEING PROPRIETARY - Copyright © - Unpublished Work - See title page for details.

FIG ITEM	PART NUMBER	1 2 3 4 5 6 7 NOMENCLATURE	EFFECT FROM TO	UNITS PER ASSY
3				
115	285N0073-1	..BLOCK ASSY-	002004	1
		SUPPLIER CODE:	006008	
		V89954	101101	
		ELECTRICAL EQUIP NUMBER:	107107	
		TB0072	121503	
			904952	
		ATTACHING PARTS		
- 120	NAS1801-06-9	..SCREW-	002004	2
		ELECTRICAL EQUIP NUMBER:	006008	
		TB0072	101101	
			107107	
			121503	
			904952	
		-------*-------		
125	10S1034A	..FILTER-EMI	002004	2
		SUPPLIER CODE:	006008	
		V13619	101101	
		ELECTRICAL EQUIP NUMBER:	107107	
		M01102	121503	
		M01103	904952	
		ATTACHING PARTS		
- 130	NAS1801-06-6	..SCREW	002004	4
			006008	
			101101	
			107107	
			121503	
			904952	
		-------*-------		
- 300	286N1451-002	WIRE BUNDLE ASSY-	121503	RF
			904949	
- 300	286N1451-003	WIRE BUNDLE ASSY	107107	RF
- 300	286N1451-004	WIRE BUNDLE ASSY-	002004	RF
		REWORKED BY SB:	006100	
		31-0127R1	950999	
- 302	286N1451-353	WIRE BUNDLE ASSY	101101	RF
305	S0-1064-007	.SOCKET-	002004	2
		SUPPLIER CODE:	006101	
		V35344	107107	
		ELECTRICAL EQUIP NUMBER:	121503	
		D00817	904999	
		D00819		
305	S0-1064-001	.SOCKET-	002004	2
		SUPPLIER CODE:	006101	
		V58657	107107	
		ELECTRICAL EQUIP NUMBER:	121503	
		D00817	904999	
		D00819		

MISSING ITEM NUMBERS NOT APPLICABLE

- ITEM NOT ILLUSTRATED

BOEING PROPRIETARY - Copyright © - Unpublished Work - See title page for details.

FIG ITEM	PART NUMBER	1 2 3 4 5 6 7 NOMENCLATURE	EFFECT FROM TO	UNITS PER ASSY
3				
310	BACC45FN22-55S9	.RECEPTACLE- POSITION DATA: POSITION 01 ELECTRICAL EQUIP NUMBER: D41481J WIRING DIAGRAM REF: 273211	950951	1
315	BACC45FN22-55S7	.RECEPTACLE- POSITION DATA: POSITION 03 ELECTRICAL EQUIP NUMBER: D41059J WIRING DIAGRAM REF: 315141	950951	1
325	BACC45FN22-55S	.CONNECTOR- POSITION DATA: POSITION 05 ELECTRICAL EQUIP NUMBER: D41491J WIRING DIAGRAM REF: 273221	950951	1
330	BACC45FN16-24S6	.CONNECTOR- ELECTRICAL EQUIP NUMBER: D40639J WIRING DIAGRAM REF: 315121	950951	1
340	BACC45FN14-15S9	.RECEPTACLE- ELECTRICAL EQUIP NUMBER: D42081J WIRING DIAGRAM REF: 315121	950951	1
- 366	286N4471-002	WIRE BUNDLE ASSY- REWORKED BY SB: 34-0200 REWORKED BY ALERT SB: 34A0222	904949	RF
- 366	286N4471-006	WIRE BUNDLE ASSY- REWORKED BY SB: 34-0200 REWORKED BY ALERT SB: 34A0222	950952	RF
- 367	286N4471-021	WIRE BUNDLE ASSY- REWORKED BY ALERT SB: 34A0222	002004 006100	RF
- 367	286N4471-340	WIRE BUNDLE ASSY- REWORKED BY ALERT SB: 34A0222	101101	RF

MISSING ITEM NUMBERS NOT APPLICABLE

- ITEM NOT ILLUSTRATED

BOEING PROPRIETARY - Copyright © - Unpublished Work - See title page for details.

FIG ITEM	PART NUMBER	1 2 3 4 5 6 7 NOMENCLATURE	EFFECT FROM TO	UNITS PER ASSY
3				
370	BACC45FT22A55P9	.PLUG-	002004	1
		POSITION DATA:	006101	
		POSITION 01	904952	
		ELECTRICAL EQUIP NUMBER:		
		D41481P		
		WIRING DIAGRAM REF:		
		273211		
- 376	286N4477-006	WIRE BUNDLE ASSY-	950951	RF
		REWORKED BY ALERT SB:		
		34A0222		
- 376	286N4477-002	WIRE BUNDLE ASSY-	904949	RF
		REWORKED BY ALERT SB:		
		34A0222		
- 376	286N4477-021	WIRE BUNDLE ASSY-	002004	RF
		REWORKED BY ALERT SB:	006100	
		34A0222		
- 376	286N4477-348	WIRE BUNDLE ASSY-	101101	RF
		REWORKED BY ALERT SB:		
		34A0222		
380	BACC45FT22A55P7	.CONNECTOR-	002004	1
		POSITION DATA:	006101	
		POSITION 03	904951	
		ELECTRICAL EQUIP NUMBER:		
		D41059P		
		WIRING DIAGRAM REF:		
		273211		
- 397	286N4473-002	WIRE BUNDLE ASSY-	904949	RF
		REWORKED BY SB:		
		34-0200		
		REWORKED BY ALERT SB:		
		34A0222		
- 397	286N4473-006	WIRE BUNDLE ASSY-	950952	RF
		REWORKED BY SB:		
		31-0127R1		
		34-0200		
		REWORKED BY ALERT SB:		
		34A0222		
- 397	286N4473-021	WIRE BUNDLE ASSY-	002004	RF
		REWORKED BY ALERT SB:	006100	
		34A0222		
- 397	286N4473-363	WIRE BUNDLE ASSY-	101101	RF
		REWORKED BY ALERT SB:		
		34A0222		

MISSING ITEM NUMBERS NOT APPLICABLE

- ITEM NOT ILLUSTRATED

BOEING PROPRIETARY - Copyright © - Unpublished Work - See title page for details.

FIG ITEM	PART NUMBER	1 2 3 4 5 6 7 NOMENCLATURE	EFFECT FROM TO	UNITS PER ASSY
3				
400	BACC45FT22-55P	.PLUG-	002004	1
		POSITION DATA:	006101	
		POSITION 05	904951	
		ELECTRICAL EQUIP NUMBER:		
		D41491P		
		WIRING DIAGRAM REF:		
		273211		
- 406	286N2241-027	WIRE BUNDLE ASSY-	002004	RF
		REWORKED BY ALERT SB:	006100	
		34A0222	950951	
- 406	286N2241-004	WIRE BUNDLE ASSY	904949	RF
410	BACC45FT16A24P6	.CONNECTOR-	002004	1
		ELECTRICAL EQUIP NUMBER:	006101	
		D40639P	904951	
		WIRING DIAGRAM REF:		
		341611		
- 426	286N2253-014	WIRE BUNDLE ASSY-	002004	RF
		REWORKED BY ALERT SB:	006100	
		34A0222	950951	
- 426	286N2253-359	WIRE BUNDLE ASSY-	101101	RF
		REWORKED BY ALERT SB:		
		34A0222		
- 427	286N2253-004	WIRE BUNDLE ASSY	904949	RF
430	BACC45FT14A15P9	.CONNECTOR-	002004	1
		ELECTRICAL EQUIP NUMBER:	006101	
		D42081P	904951	
		WIRING DIAGRAM REF:		
		221421		

MISSING ITEM NUMBERS NOT APPLICABLE

- ITEM NOT ILLUSTRATED

BOEING PROPRIETARY - Copyright © - Unpublished Work - See title page for details.

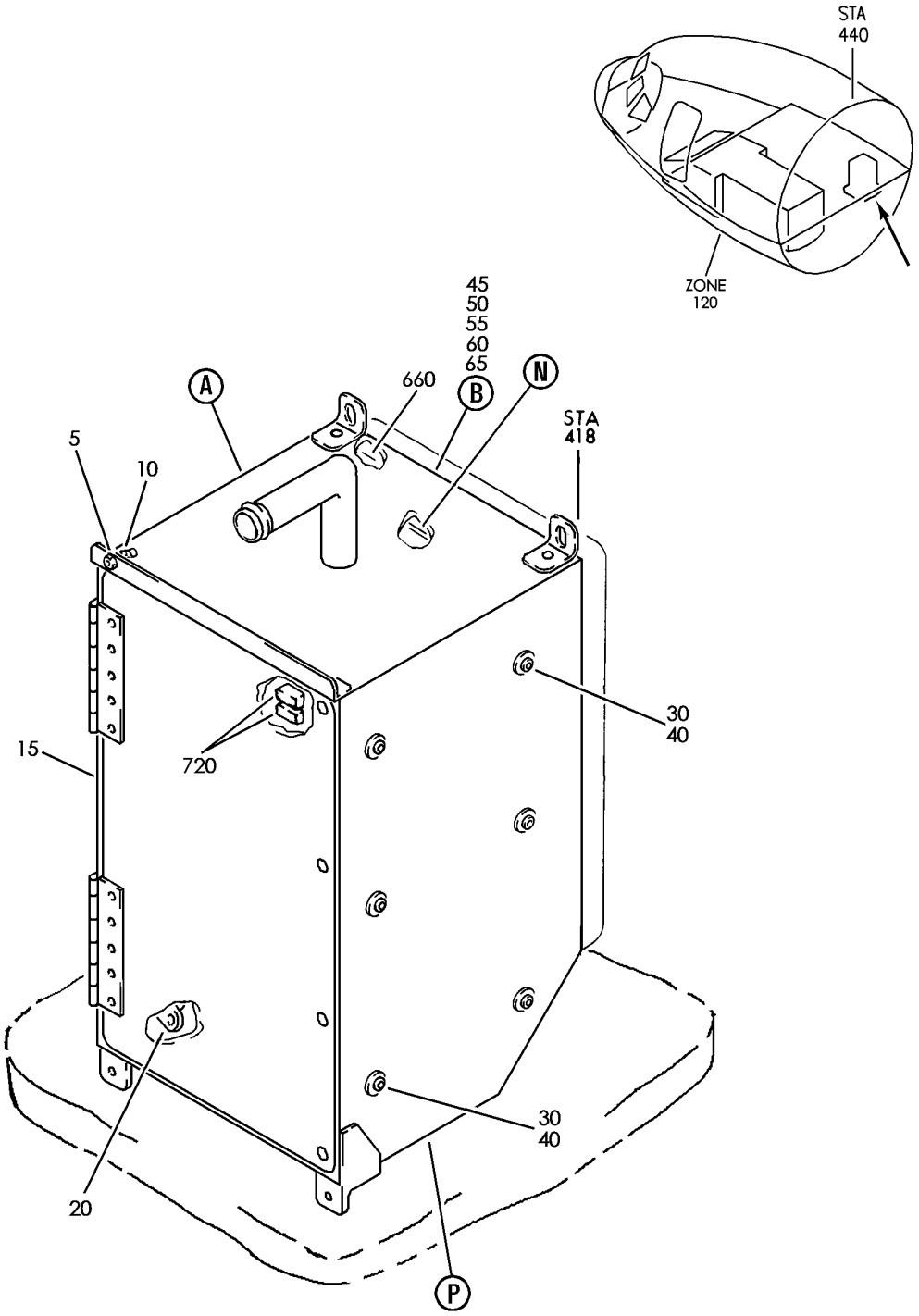

Y 31515103A SHT 1 REV 229

FILE INSTL-P51 (WARNING SYSTEM ONLY)
FIGURE 3A (SHEET 1)

BOEING PROPRIETARY - Copyright © - Unpublished Work - See title page for details.

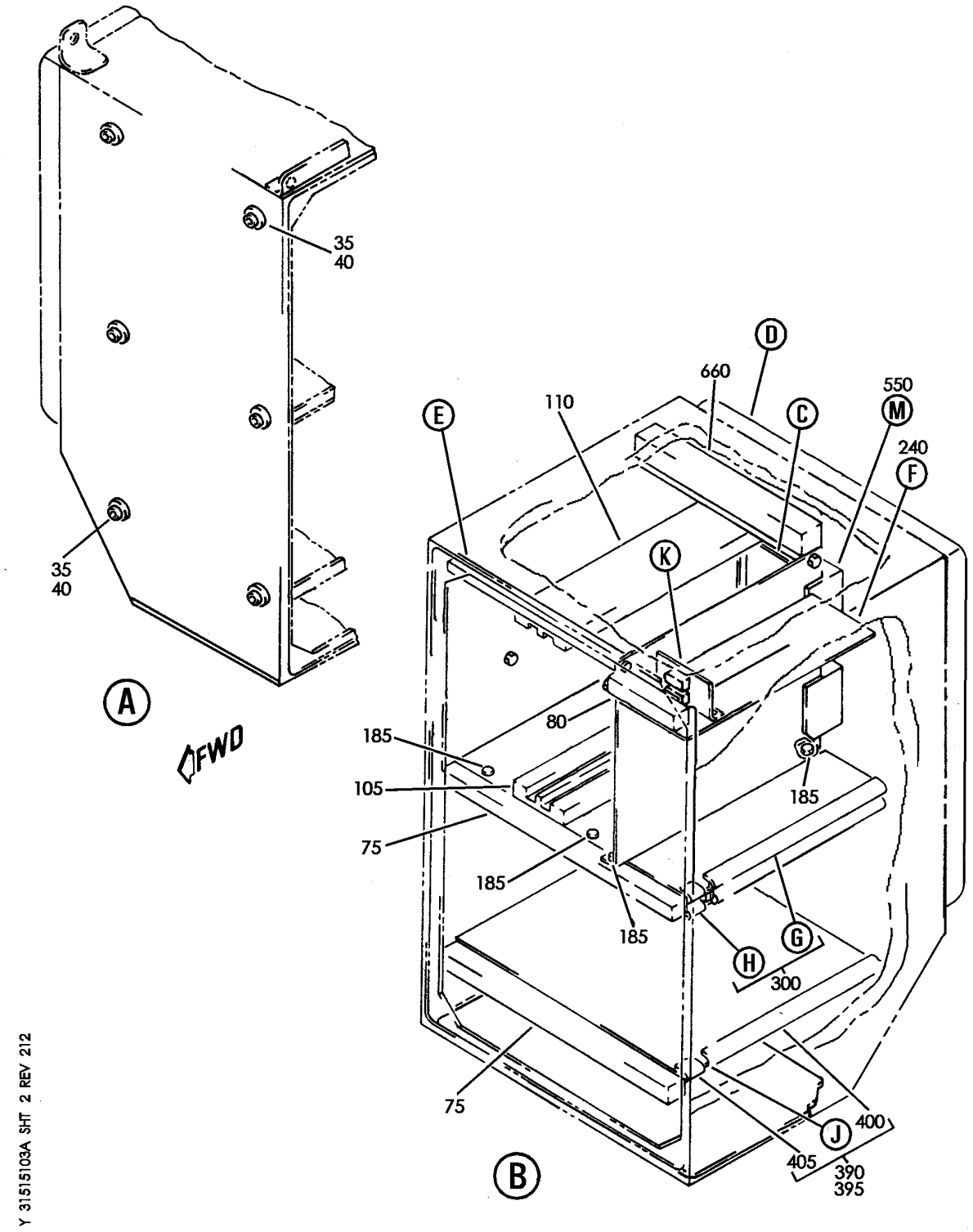

FILE INSTL-P51 (WARNING SYSTEM ONLY)
FIGURE 3A (SHEET 2)

BOEING PROPRIETARY - Copyright © - Unpublished Work - See title page for details.

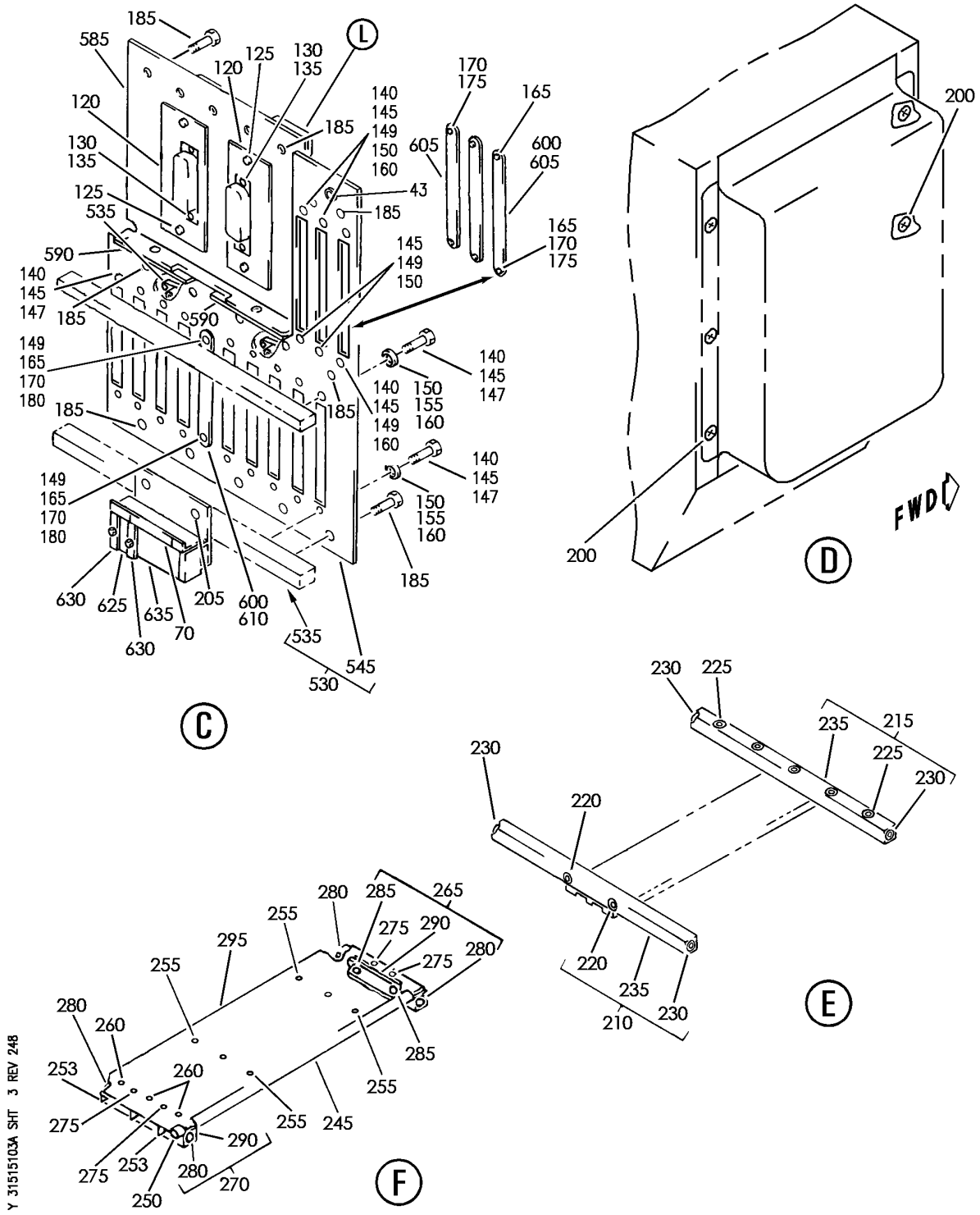

FILE INSTL-P51 (WARNING SYSTEM ONLY)
FIGURE 3A (SHEET 3)

BOEING PROPRIETARY - Copyright © - Unpublished Work - See title page for details.

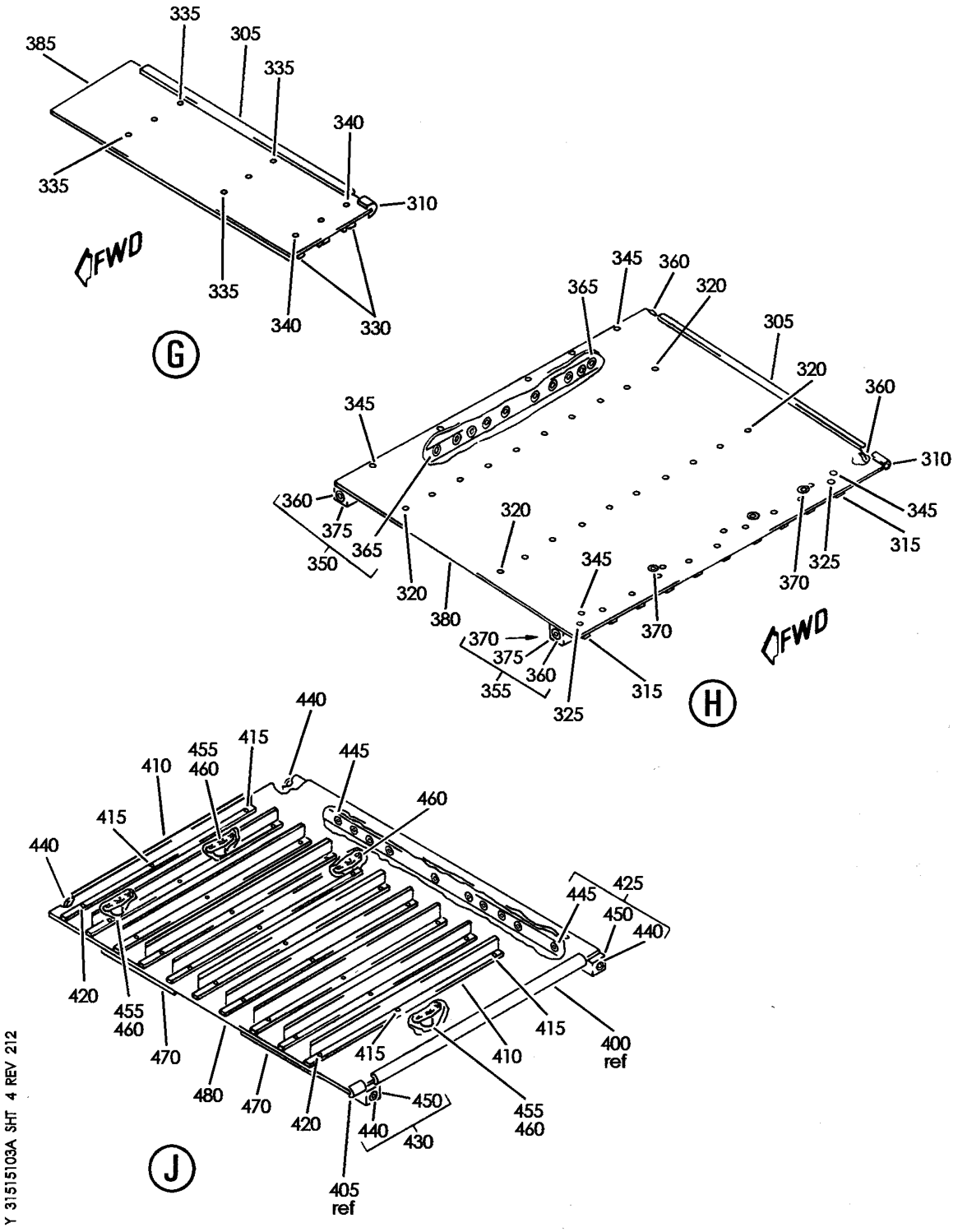

FILE INSTL-P51 (WARNING SYSTEM ONLY)
FIGURE 3A (SHEET 4)

BOEING PROPRIETARY - Copyright © - Unpublished Work - See title page for details.

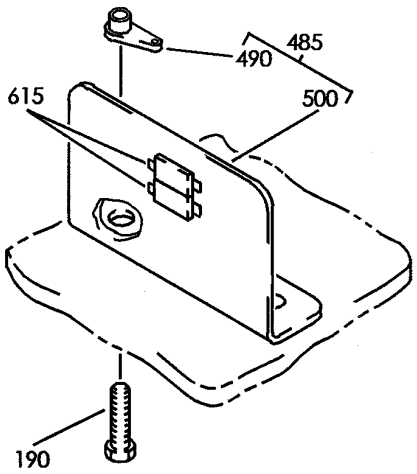

K

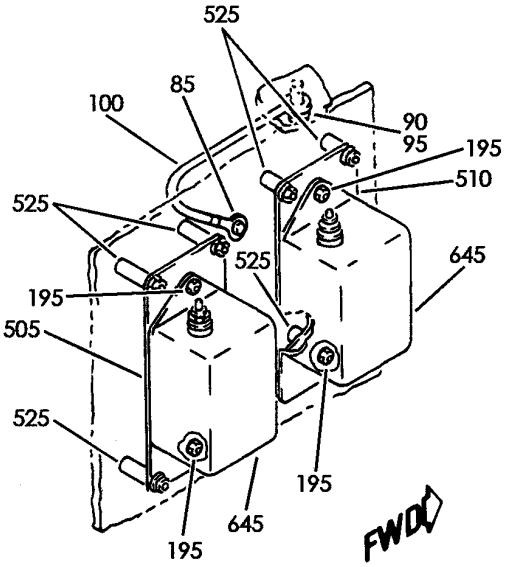

L

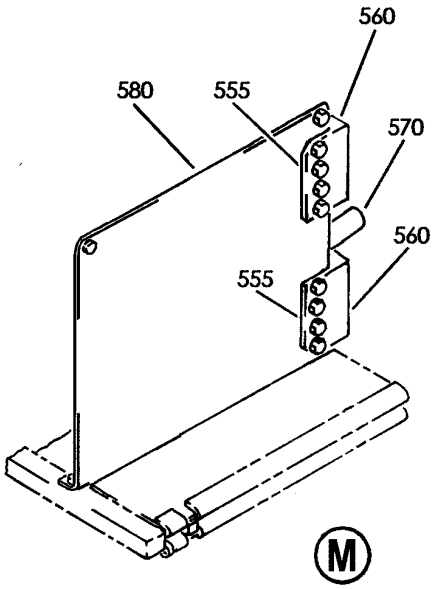

M

Y 31515103A SHT 5 REV 212

FILE INSTL-P51 (WARNING SYSTEM ONLY)
FIGURE 3A (SHEET 5)

BOEING PROPRIETARY - Copyright © - Unpublished Work - See title page for details.

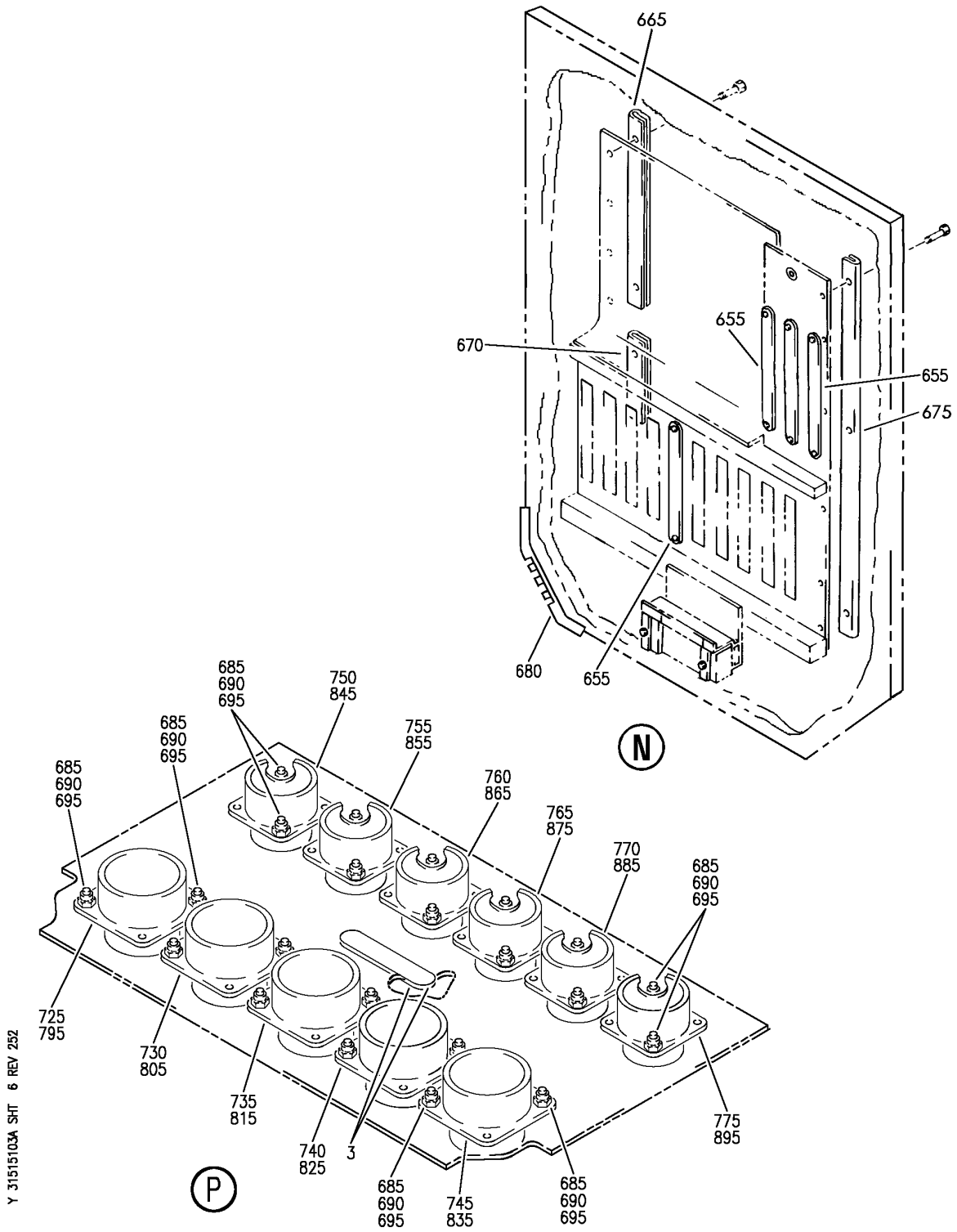

FILE INSTL-P51 (WARNING SYSTEM ONLY)
FIGURE 3A (SHEET 6)

BOEING PROPRIETARY - Copyright © - Unpublished Work - See title page for details.

FIG ITEM	PART NUMBER	1 2 3 4 5 6 7 NOMENCLATURE	EFFECT FROM TO	UNITS PER ASSY
3A				
		FILE INSTL-P51	102102	
		(WARNING SYSTEM ONLY)	108120	
			504903	
- 1	285N0005-51	FILE INSTL-P51	108120	RF
		(WARNING SYSTEM ONLY)		
		SUPPLIER CODE:		
		V89954		
		FOR NHA/OTHER SYS DET SEE:		
		24-00-58-05F		
- 1	285N0005-55	FILE INSTL-P51	102102	RF
		(WARNING SYSTEM ONLY)	504903	
		SUPPLIER CODE:		
		V89954		
		FOR NHA/OTHER SYS DET SEE:		
		24-00-58-05F		
3	BAC27NEX1391	.DECAL-	102102	2
		SUPPLIER CODE:	108120	
		V89954	504903	
		PLACARD CONTENT:		
		AP0051		
5	108-0740-001	.JACK-STATIC GND BANANA	102102	1
		SUPPLIER CODE:	108120	
		V74970	504903	
10	NAS43DD4-6FC	.SPACER	102102	1
			108120	
			504903	
15	13481000-3	.ENCLOSURE ASSY-	102102	1
		SUPPLIER CODE:	108120	
		V23296	504903	
20	BACN10TL3A3	.NUT-SPACER PLATE	102102	1
			108120	
			504903	
		ATTACHING PARTS		
- 25	BACR15BA4D	.RIVET-	102102	2
		SIZE DETERMINED ON INSTL.	108120	
			504903	
		-------*-------		
30	NAS1801-08-19	.SCREW	102102	6
			108120	
			504903	
35	NAS1801-08-16	.SCREW	102102	6
			108120	
			504903	
40	BACW10P178AL	.WASHER	102102	12
			108120	
			504903	

MISSING ITEM NUMBERS NOT APPLICABLE

- ITEM NOT ILLUSTRATED

BOEING PROPRIETARY - Copyright © - Unpublished Work - See title page for details.

FIG ITEM	PART NUMBER	1 2 3 4 5 6 7 NOMENCLATURE	EFFECT FROM TO	UNITS PER ASSY
3A				
43	RR2002-2B1J	.GROMMET	108120	1
		SUPPLIER CODE:		
		V57268		
		SPECIFICATION NUMBER:		
		BACG20AF2B1J		
		OPTIONAL PART:		
		SZ6924-2B1J		
		V95272		
		701-2B1J		
		V07096		
		E2B1J		
		V60980		
		H2B1J		
		V60980		
		G6940-2B1J		
		V75345		
45	285N0005-56	.CARD GUIDE ASSY-	108120	1
		SUPPLIER CODE:		
		V89954		
65	285N0005-60	.CARD GUIDE ASSY-	102102	1
		SUPPLIER CODE:	504903	
		V89954		
70	BAC27TEX1316	..DECAL-	102102	1
		PLACARD CONTENT:	108120	
		77 THRU 97	504903	
75	285N0039-2	..SEAL	102102	2
			108120	
			504903	
80	285N0039-4	..SEAL	102102	1
			108120	
			504903	
85	VNS1924CA1-8	..STUD	102102	1
		SUPPLIER CODE:	108120	
		V5M902	504903	
		SPECIFICATION NUMBER:		
		BACS53B1EA1		
		OPTIONAL PART:		
		VNS1924CA3-1-8		
		V92215		
90	NAS1149D0463J	..WASHER	102102	1
			108120	
			504903	
95	MS21042L3	..NUT	102102	1
			108120	
			504903	

MISSING ITEM NUMBERS NOT APPLICABLE

— ITEM NOT ILLUSTRATED

BOEING PROPRIETARY - Copyright © - Unpublished Work - See title page for details.

FIG ITEM	PART NUMBER	1 2 3 4 5 6 7 NOMENCLATURE	EFFECT FROM TO	UNITS PER ASSY
3A				
100	740A21-4	..JUMPER ASSY	102102	1
		SUPPLIER CODE:	108120	
		V91812	504903	
		SPECIFICATION NUMBER:		
		BACJ40A21-4		
		OPTIONAL PART:		
		TJEJ40A21-4		
		V33483		
		RBEJ21-4		
		V1GK47		
105	285N0037-1	..GUIDE-PWR SUPPLY	102102	1
		SUPPLIER CODE:	108120	
		V89954	504903	
110	285N0037-2	..GUIDE-PWR SUPPLY	102102	1
		SUPPLIER CODE:	108120	
		V89954	504903	
		ATTACHING PARTS		
- 115	NAS514P632-9	..SCREW	102102	8
			108120	
			504903	
		-------*-------		
120	285T0297-1	..PANEL-PWR SUPPLY	102102	2
		SUPPLIER CODE:	108120	
		V89954	504903	
		ATTACHING PARTS		
125	NAS514P632-4	..SCREW	102102	4
			108120	
			504903	
130	NAS1352N02-6	..SCREW-	102102	4
			504903	
130	BACS12BE02A6	..SCREW-	108120	4
135	92-1660-256	..NUT	102102	4
		SUPPLIER CODE:	108120	
		V15653	504903	
		SPECIFICATION NUMBER:		
		BACN10DN26		
		OPTIONAL PART:		
		92-1660-26		
		V72962		
140	NAS1801-04-5	..SCREW	102102	26
			108120	
			504903	
145	NAS1801-04-5	..SCREW	102102	24
			504903	
150	BACW10EC04S	..WASHER	108120	22
160	BACW10EC04S	..WASHER	102102	24
			504903	
165	MS21042L04	..NUT	108120	4

MISSING ITEM NUMBERS NOT APPLICABLE

- ITEM NOT ILLUSTRATED

BOEING PROPRIETARY - Copyright © - Unpublished Work - See title page for details.

FIG ITEM	PART NUMBER	1 2 3 4 5 6 7 NOMENCLATURE	EFFECT FROM TO	UNITS PER ASSY
3A				
180	MS21042L04	..NUT	102102 504903	2
		-------*-------		
185	NAS1801-06-4	..SCREW	102102 108120 504903	21
190	NAS1801-06-5	..SCREW	102102 108120 504903	2
195	NAS1801-06-6	..SCREW	102102 108120 504903	4
200	NAS1801-06-8	..SCREW	102102 504903	5
205	NAS1801-06-09	..SCREW	108120	2
210	285N0035-24	..BAR ASSY	102102 108120 504903	1
215	285N0035-25	..BAR ASSY	102102 108120 504903	1
220	MS21209C0615	...INSERT- USED ON: 285N0035-24	102102 108120 504903	2
225	MS21209C0615	...INSERT- USED ON: 285N0035-25	102102 108120 504903	7
230	MS21209C0825	...INSERT	102102 108120 504903	2
235	285N0035-15	...BAR	102102 108120 504903	1
240	285N0038-32	..PLATE ASSY- SUPPLIER CODE: V89954	102102 108120 504903	1
245	285N0038-14	...SEAL- SUPPLIER CODE: V89954	102102 108120 504903	1
250	285N0038-15	...SEAL- SUPPLIER CODE: V89954	102102 108120 504903	1
253	24BX2-12-3L	...GUIDE-CARD PCB SUPPLIER CODE: V18915	102102 108120 504903	3

MISSING ITEM NUMBERS NOT APPLICABLE

— ITEM NOT ILLUSTRATED

BOEING PROPRIETARY - Copyright © - Unpublished Work - See title page for details.

FIG ITEM	PART NUMBER	1 2 3 4 5 6 7 NOMENCLATURE	EFFECT FROM TO	UNITS PER ASSY
3A				
		ATTACHING PARTS		
255	AF5170-3	...RIVET-	102102	6
		SUPPLIER CODE:	108120	
		V53551	504903	
		SPECIFICATION NUMBER:		
		BACR15DR3P		
		OPTIONAL PART:		
		RV570A3		
		V98996		
		CCR274SS3		
		V11815		
		SIZE DETERMINED ON INSTL.		
260	BACR15DR3	...RIVET-	102102	3
		SIZE DETERMINED ON INSTL.	108120	
			504903	
		-------*-------		
265	285N0035-23	...BAR ASSY	102102	1
			108120	
			504903	
270	285N0035-22	...BAR ASSY	102102	1
			108120	
			504903	
		ATTACHING PARTS		
275	BACR15BA5D	...RIVET-	102102	2
		SIZE DETERMINED ON INSTL.	108120	
			504903	
		-------*-------		
280	MS21209C0825	....INSERT	102102	2
			108120	
			504903	
285	MS21209C0615	....INSERT-	102102	2
		USED ON:	108120	
		285N0035-23	504903	
290	285N0035-14	....BAR	102102	1
			108120	
			504903	
295	285N0038-18	...PLATE-	102102	1
		SUPPLIER CODE:	108120	
		V89954	504903	
300	285N0038-33	..PLATE ASSY-	102102	1
		SUPPLIER CODE:	108120	
		V89954	504903	
305	285N0038-14	...SEAL-	102102	2
		SUPPLIER CODE:	108120	
		V89954	504903	
310	285N0038-15	...SEAL-	102102	2
		SUPPLIER CODE:	108120	
		V89954	504903	

MISSING ITEM NUMBERS NOT APPLICABLE

– ITEM NOT ILLUSTRATED

BOEING PROPRIETARY - Copyright © - Unpublished Work - See title page for details.

FIG ITEM	PART NUMBER	1 2 3 4 5 6 7 NOMENCLATURE	EFFECT FROM TO	UNITS PER ASSY
3A				
315	24BX2-12-3L	...GUIDE-CARD PCB SUPPLIER CODE: V18915 ATTACHING PARTS	102102 108120 504903	10
320	AF5170-3	...RIVET- SUPPLIER CODE: V53551 SPECIFICATION NUMBER: BACR15DR3P OPTIONAL PART: RV570A3 V98996 CCR274SS3 V11815 SIZE DETERMINED ON INSTL.	102102 108120 504903	20
325	BACR15DR3	...RIVET- SIZE DETERMINED ON INSTL. -------*-------	102102 108120 504903	10
330	24BX2-12-3R	...GUIDE-CARD PCB SUPPLIER CODE: V18915 ATTACHING PARTS	102102 108120 504903	3
335	AF5170-3	...RIVET- SUPPLIER CODE: V53551 SPECIFICATION NUMBER: BACR15DR3P OPTIONAL PART: RV570A3 V98996 CCR274SS3 V11815 SIZE DETERMINED ON INSTL.	102102 108120 504903	6
340	BACR15DR3	...RIVET- SIZE DETERMINED ON INSTL. -------*-------	102102 108120 504903	3
345	BACR15BA4D	...RIVET- SIZE DETERMINED ON INSTL.	102102 108120 504903	10
350	285N0035-18	...BAR ASSY	102102 108120 504903	1
355	285N0035-21	...BAR ASSY	102102 108120 504903	1

MISSING ITEM NUMBERS NOT APPLICABLE

– ITEM NOT ILLUSTRATED

BOEING PROPRIETARY - Copyright © - Unpublished Work - See title page for details.

FIG ITEM	PART NUMBER	1 2 3 4 5 6 7 NOMENCLATURE	EFFECT FROM TO	UNITS PER ASSY
3A				
360	MS21209C0825	....INSERT	102102 108120 504903	2
365	MS21209C0615	....INSERT- USED ON: 285N0035-18	102102 108120 504903	10
370	MS21209C0615	....INSERT- USED ON: 285N0035-21	102102 108120 504903	3
375	285N0035-13	....BAR	102102 108120 504903	1
380	285N0038-22	...PLATE- SUPPLIER CODE: V89954	102102 108120 504903	1
385	285N0038-23	...PLATE- SUPPLIER CODE: V89954	102102 108120 504903	1
395	285N0038-35	..PLATE ASSY- SUPPLIER CODE: V89954	102102 108120 504903	1
400	285N0038-14	...SEAL- SUPPLIER CODE: V89954	102102 108120 504903	1
405	285N0038-15	...SEAL- SUPPLIER CODE: V89954	102102 108120 504903	1
410	24BX2-12-3R	...GUIDE-CARD SUPPLIER CODE: V18915 ATTACHING PARTS	102102 108120 504903	10
415	AF5170-3	...RIVET- SUPPLIER CODE: V53551 SPECIFICATION NUMBER: BACR15DR3P OPTIONAL PART: RV570A3 V98996 CCR274SS3 V11815 SIZE DETERMINED ON INSTL.	102102 108120 504903	20
420	BACR15DR3	...RIVET- SIZE DETERMINED ON INSTL. -------*-------	102102 108120 504903	10
425	285N0035-19	...BAR ASSY	102102 108120 504903	1

MISSING ITEM NUMBERS NOT APPLICABLE

– ITEM NOT ILLUSTRATED

BOEING PROPRIETARY - Copyright © - Unpublished Work - See title page for details.

FIG ITEM	PART NUMBER	1 2 3 4 5 6 7 NOMENCLATURE	EFFECT FROM TO	UNITS PER ASSY
3A				
430	285N0035-20	...BAR ASSY	102102 108120 504903	1
		ATTACHING PARTS		
- 435	BACR15BA5D	...RIVET- SIZE DETERMINED ON INSTL.	102102 108120 504903	8
		-------*-------		
440	MS21209C0825	....INSERT	102102 108120 504903	2
445	MS21209C0615	....INSERT- USED ON: 285N0035-19	102102 108120 504903	10
450	285N0035-13	....BAR	102102 108120 504903	1
460	WSI4A6B	...NUTPLATE SUPPLIER CODE: V04169 SPECIFICATION NUMBER: BACN10TL3A6B	102102 108120 504903	4
		ATTACHING PARTS		
- 465	BACR15BB4D	...RIVET- SIZE DETERMINED ON INSTL.	102102 108120 504903	14
		-------*-------		
470	YHLZG16-2	...BLOCK-GND SUPPLIER CODE: V09922 ELECTRICAL EQUIP NUMBER: GD0299 GD1277	102102 108120 504903	2
		ATTACHING PARTS		
- 475	BACR15BA5D	...RIVET- SIZE DETERMINED ON INSTL.	102102 108120 504903	8
		-------*-------		
480	285N0038-20	...PLATE- SUPPLIER CODE: V89954	102102 108120 504903	1
485	285N0038-12	..PLATE ASSY- SUPPLIER CODE: V89954	102102 108120 504903	1

MISSING ITEM NUMBERS NOT APPLICABLE

- ITEM NOT ILLUSTRATED

BOEING PROPRIETARY - Copyright © - Unpublished Work - See title page for details.

FIG ITEM	PART NUMBER	1 2 3 4 5 6 7 NOMENCLATURE	EFFECT FROM TO	UNITS PER ASSY
3A				
490	T8077S632	...NUTPLATE SUPPLIER CODE: V11815 SPECIFICATION NUMBER: BACN10JP06B OPTIONAL PART: MK2000-06BAC V15653 NS103198-62 V80539 RMA9207M62 V72962 VN201A1-62L V92215 BRM100A06L V52828 ATTACHING PARTS	102102 108120 504903	2
- 495	BACR15BA3AD	...RIVET- SIZE DETERMINED ON INSTL.	102102 108120 504903	4
		-------*-------		
500	285N0038-13	...PLATE- SUPPLIER CODE: V89954	102102 108120 504903	1
505	285N0080-1	..PLATE ASSY-FILTER	102102 108120 504903	1
510	285N0080-2	..PLATE ASSY-FILTER	102102 108120 504903	1
		ATTACHING PARTS		
515	NAS514P632-16P	..SCREW	102102 108120 504903	6
520	MS21042L06	..NUT	102102 108120 504903	6
		-------*-------		
525	NAS43DD1-40FC	..SPACER	102102 108120 504903	6
530	285N0038-36	..PLATE ASSY- SUPPLIER CODE: V89954	102102 108120 504903	1
535	BACN10TL3A18	...NUT	102102 108120 504903	2

MISSING ITEM NUMBERS NOT APPLICABLE

- ITEM NOT ILLUSTRATED

BOEING PROPRIETARY - Copyright © - Unpublished Work - See title page for details.

FIG ITEM	PART NUMBER	1 2 3 4 5 6 7 NOMENCLATURE	EFFECT FROM TO	UNITS PER ASSY
3A				
545	285N0038-8	...PLATE-	102102	1
		SUPPLIER CODE:	108120	
		V89954	504903	
550	285N0038-41	..PLATE ASSY-SIDE	102102	1
		SUPPLIER CODE:	108120	
		V89954	504903	
555	285N0038-42	...SHIM-	102102	2
		SUPPLIER CODE:	108120	
		V89954	504903	
560	YHLZG16-2	...BLOCK-	102102	2
		SUPPLIER CODE:	108120	
		V09922	504903	
		ELECTRICAL EQUIP NUMBER:		
		GD1278		
		GD1279		
		ATTACHING PARTS		
- 565	BACR15BA5D	...RIVET-	102102	8
		SIZE DETERMINED ON INSTL.	108120	
			504903	
		-------*-------		
570	WS1-332A16	...NUTPLATE	102102	1
		SUPPLIER CODE:	108120	
		V04169	504903	
		SPECIFICATION NUMBER:		
		BACN10GH3A16		
		ATTACHING PARTS		
- 575	BACR15BA4AD	...RIVET-	102102	2
		SIZE DETERMINED ON INSTL.	108120	
			504903	
		-------*-------		
580	285N0038-27	...PLATE-	102102	1
		SUPPLIER CODE:	108120	
		V89954	504903	
585	285N0038-40	..PLATE ASSY-	102102	1
		SUPPLIER CODE:	108120	
		V89954	504903	
590	YHLZG16-1	...BLOCK-GND	102102	2
		SUPPLIER CODE:	108120	
		V09922	504903	
		ELECTRICAL EQUIP NUMBER:		
		GD0297		
		GD0298		
		ATTACHING PARTS		
- 595	BACR15BA5D	...RIVET-	102102	8
		SIZE DETERMINED ON INSTL.	108120	
			504903	
		-------*-------		
600	285T0018-11	..COVER-PLATE	108120	2

MISSING ITEM NUMBERS NOT APPLICABLE

- ITEM NOT ILLUSTRATED

BOEING PROPRIETARY - Copyright © - Unpublished Work - See title page for details.

FIG ITEM	PART NUMBER	1 2 3 4 5 6 7 NOMENCLATURE	EFFECT FROM TO	UNITS PER ASSY
3A				
610	285T0018-11	..COVER-PLATE	102102 504903	1
615	XD4N	..RELAY-DPDT .5 AMP SUPPLIER CODE: V58657 ELECTRICAL EQUIP NUMBER: K10343 K10344 OPTIONAL PART: XD4N103 V80183	102102 108120 504903	2
615	XD4N103	..RELAY- SUPPLIER CODE: V80183 ELECTRICAL EQUIP NUMBER: K10343 K10344 OPTIONAL PART: XD4N V58657	102102 108120 504903	2
625	H21-1	..SPACER SUPPLIER CODE: V34941 SPECIFICATION NUMBER: BACS18AR1 OPTIONAL PART: FAB276A V15805 YHLZ1C2 V09922	102102 108120 504903	1
630	H49-1	..CLAMP SUPPLIER CODE: V34941 SPECIFICATION NUMBER: BACC49A1A OPTIONAL PART: MF104-1 V6E102	102102 108120 504903	2
635	285N0073-1	..BLOCK ASSY-TERM. SUPPLIER CODE: V89954 ELECTRICAL EQUIP NUMBER: TB0072 ATTACHING PARTS	102102 108120 504903	1
- 640	NAS1801-06-9	..SCREW	102102 108120 504903	2
		-------*-------		
		MISSING ITEM NUMBERS NOT APPLICABLE		

- ITEM NOT ILLUSTRATED

BOEING PROPRIETARY - Copyright © - Unpublished Work - See title page for details.

FIG ITEM	PART NUMBER	1 2 3 4 5 6 7 NOMENCLATURE	EFFECT FROM TO	UNITS PER ASSY
3A				
645	10S1034A	..FILTER-	102102	2
		SUPPLIER CODE:	108120	
		V13619	504903	
		ELECTRICAL EQUIP NUMBER:		
		M01102		
		M01103		
		ATTACHING PARTS		
- 650	NAS1801-06-9	..SCREW	102102	4
			108120	
			504903	
		-------*-------		
660	285N0039-5	.SEAL-	102102	1
		OPTIONAL PART:	108120	
		285N0039-8	504903	
660	285N0039-8	.SEAL-	102102	1
		OPTIONAL PART:	108120	
		285N0039-5	504903	
665	285N0040-13	.SEAL ASSY-	102102	1
		SUPPLIER CODE:	108120	
		V89954	504903	
670	285N0039-7	.SEAL	102102	1
			108120	
			504903	
675	285N0040-17	.SEAL ASSY-	102102	1
		SUPPLIER CODE:	108120	
		V89954	504903	
680	BACG20AD300	.GROMMET	102102	1
			108120	
			504903	
685	NAS1801-04-6	.SCREW	102102	22
			108120	
			504903	
690	NAS1149FN432P	.WASHER	102102	22
			108120	
			504903	

MISSING ITEM NUMBERS NOT APPLICABLE

- ITEM NOT ILLUSTRATED

BOEING PROPRIETARY - Copyright © - Unpublished Work - See title page for details.

FIG ITEM	PART NUMBER	1 2 3 4 5 6 7 NOMENCLATURE	EFFECT FROM TO	UNITS PER ASSY
3A				
695	BRH10C04D	.NUT	102102	22
		SUPPLIER CODE:	108120	
		V52828	504903	
		SPECIFICATION NUMBER:		
		BACN10JC04CD		
		OPTIONAL PART:		
		H51650-04BAC		
		V15653		
		102LH9075-40W		
		V72962		
		NS202486-40		
		V80539		
		T6C440JCD		
		V11815		
		T6C440JCD		
		V11815		
- 710	286N1451-354	WIRE BUNDLE ASSY	102102	RF
- 710	286N1451-360	WIRE BUNDLE ASSY	504903	RF
- 712	286N1451-389	WIRE BUNDLE ASSY	108120	RF
720	S0-1064-007	.SOCKET-	102102	2
		SUPPLIER CODE:	108120	
		V35344	504903	
		ELECTRICAL EQUIP NUMBER:		
		D00817		
		D00819		
		WIRING DIAGRAM REF:		
		315111		
		315112		
725	BACC45FN22-55S9	.RECEPTACLE-	108120	1
		ELECTRICAL EQUIP NUMBER:		
		D41481J		
		WIRING DIAGRAM REF:		
		273211		
735	BACC45FN22-55S7	.RECEPTACLE-	108120	1
		ELECTRICAL EQUIP NUMBER:		
		D41059J		
		WIRING DIAGRAM REF:		
		315141		
740	BACC45FN20-41S6	.RECEPTACLE-	108120	1
		ELECTRICAL EQUIP NUMBER:		
		D40587J		
		WIRING DIAGRAM REF:		
		315131		
745	BACC45FN22-55S	.CONNECTOR-	108120	1
		ELECTRICAL EQUIP NUMBER:		
		D41491J		
		WIRING DIAGRAM REF:		
		273221		

MISSING ITEM NUMBERS NOT APPLICABLE

- ITEM NOT ILLUSTRATED

BOEING PROPRIETARY - Copyright © - Unpublished Work - See title page for details.

FIG ITEM	PART NUMBER	1 2 3 4 5 6 7 NOMENCLATURE	EFFECT FROM TO	UNITS PER ASSY
3A				
755	BACC45FN16-24S6	.CONNECTOR- ELECTRICAL EQUIP NUMBER: D40639J WIRING DIAGRAM REF: 315121	108120	1
760	BACC45FN12-12P	.CONNECTOR- ELECTRICAL EQUIP NUMBER: D40714J WIRING DIAGRAM REF: 315111	108120	1
765	BACC45FN14-15S9	.RECEPTACLE- ELECTRICAL EQUIP NUMBER: D42081J WIRING DIAGRAM REF: 315121	108120	1
770	BACC45FN12-12P8	.CONNECTOR- ELECTRICAL EQUIP NUMBER: D40736J WIRING DIAGRAM REF: 315112	108120	1
- 780	YHLZ16-4	.MODULE- SUPPLIER CODE: V09922 SPECIFICATION NUMBER: BACM15C3B OPTIONAL PART: 421120-452 V58982 TBH120452 V58982 ELECTRICAL EQUIP NUMBER: TB0072Y WIRING DIAGRAM REF: 315121	108120	1
- 785	YHLZ16-8	.MODULE- SUPPLIER CODE: V09922 SPECIFICATION NUMBER: BACM15C3C OPTIONAL PART: 421120-454 V58982 TBH120454 V58982 ELECTRICAL EQUIP NUMBER: TB0072Z WIRING DIAGRAM REF: 315121	108120	2

MISSING ITEM NUMBERS NOT APPLICABLE

- ITEM NOT ILLUSTRATED

BOEING PROPRIETARY - Copyright © - Unpublished Work - See title page for details.

FIG ITEM	PART NUMBER	1 2 3 4 5 6 7 NOMENCLATURE	EFFECT FROM TO	UNITS PER ASSY
3A				
- 792	286N4471-426	WIRE BUNDLE ASSY- REWORKED BY ALERT SB: 34A0222	108120	RF
795	BACC45FT22A55P9	.PLUG- ELECTRICAL EQUIP NUMBER: D41481P WIRING DIAGRAM REF: 273211	108120	1
- 811	286N4477-384	WIRE BUNDLE ASSY- REWORKED BY ALERT SB: 34A0222	108120	RF
815	BACC45FT22A55P7	.CONNECTOR- ELECTRICAL EQUIP NUMBER: D41059P WIRING DIAGRAM REF: 273211	108120	1
- 820	286N2193-304	WIRE BUNDLE ASSY	108120	RF
825	BACC45FT20A41P6	.PLUG- ELECTRICAL EQUIP NUMBER: D40587P WIRING DIAGRAM REF: 315131	108120	1
- 830	286N4473-320	WIRE BUNDLE ASSY- REWORKED BY ALERT SB: 34A0222	108120	RF
835	BACC45FT22-55P	.PLUG- ELECTRICAL EQUIP NUMBER: D41491P WIRING DIAGRAM REF: 273211 273221	108120	1
- 851	286N2241-392	WIRE BUNDLE ASSY- REWORKED BY ALERT SB: 34A0222	108120	RF
855	BACC45FT16A24P6	.CONNECTOR- ELECTRICAL EQUIP NUMBER: D40639P WIRING DIAGRAM REF: 341611	108120	1
- 860	286N2356-329	WIRE BUNDLE ASSY	108120	RF
- 860	286N2356-340	WIRE BUNDLE ASSY	108120	RF
865	BACC45FT12-12S	.CONNECTOR- ELECTRICAL EQUIP NUMBER: D40714P WIRING DIAGRAM REF: 315111	108120	1
- 871	286N2253-415	WIRE BUNDLE ASSY- REWORKED BY ALERT SB: 34A0222	108120	RF

MISSING ITEM NUMBERS NOT APPLICABLE

- ITEM NOT ILLUSTRATED

BOEING PROPRIETARY - Copyright © - Unpublished Work - See title page for details.

FIG ITEM	PART NUMBER	1 2 3 4 5 6 7 NOMENCLATURE	EFFECT FROM TO	UNITS PER ASSY
3A				
875	BACC45FT14A15P9	.CONNECTOR-	108120	1
		ELECTRICAL EQUIP NUMBER:		
		D42081P		
		WIRING DIAGRAM REF:		
		221421		
- 880	286N2360-334	WIRE BUNDLE ASSY	108120	RF
885	BACC45FT12-12S8	.PLUG-	108120	1
		ELECTRICAL EQUIP NUMBER:		
		D40736P		
		WIRING DIAGRAM REF:		
		315112		
- 890	286N2195-304	WIRE BUNDLE ASSY	108120	RF
895	BACC45FT14A15P7	.PLUG-	108120	1
		ELECTRICAL EQUIP NUMBER:		
		D40585P		
		WIRING DIAGRAM REF:		
		315132		

MISSING ITEM NUMBERS NOT APPLICABLE

- ITEM NOT ILLUSTRATED

BOEING PROPRIETARY - Copyright © - Unpublished Work - See title page for details.

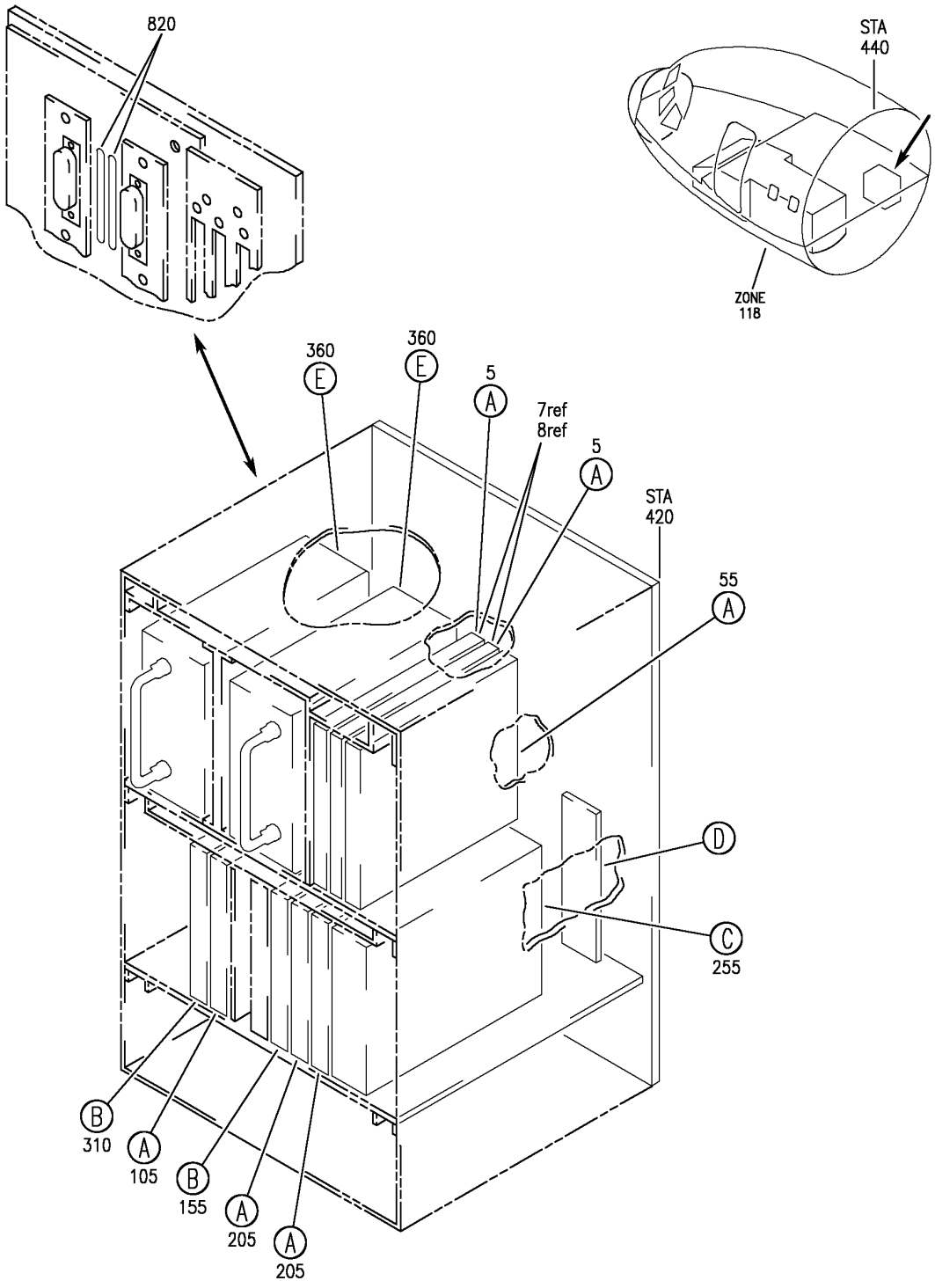

EQUIPMENT INSTL-MAIN ELECTRONICS EQPT CTR WARNING SYS
FIGURE 8 (SHEET 1)

BOEING PROPRIETARY - Copyright © - Unpublished Work - See title page for details.

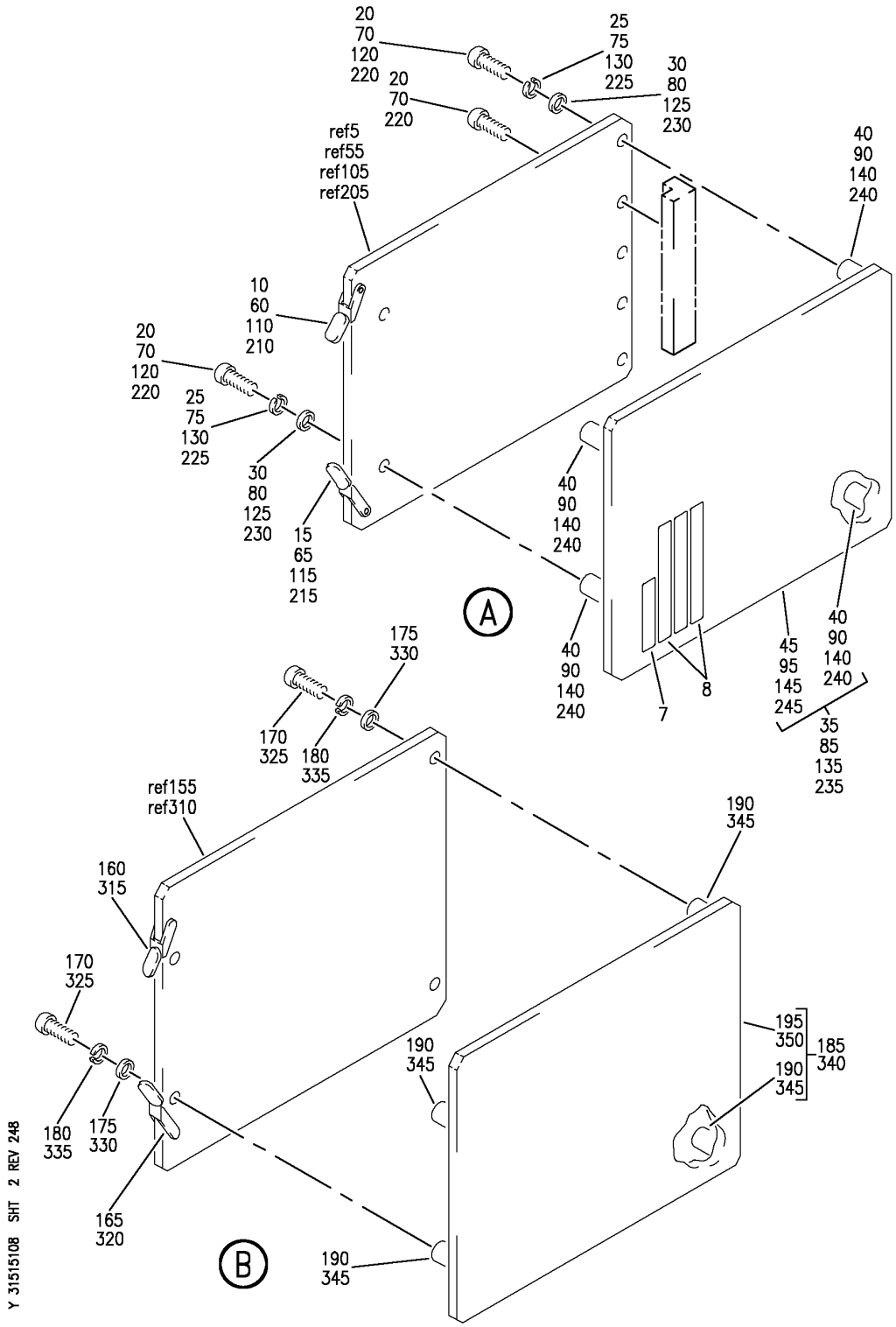

EQUIPMENT INSTL-MAIN ELECTRONICS EQPT CTR WARNING SYS
FIGURE 8 (SHEET 2)

BOEING PROPRIETARY - Copyright © - Unpublished Work - See title page for details.

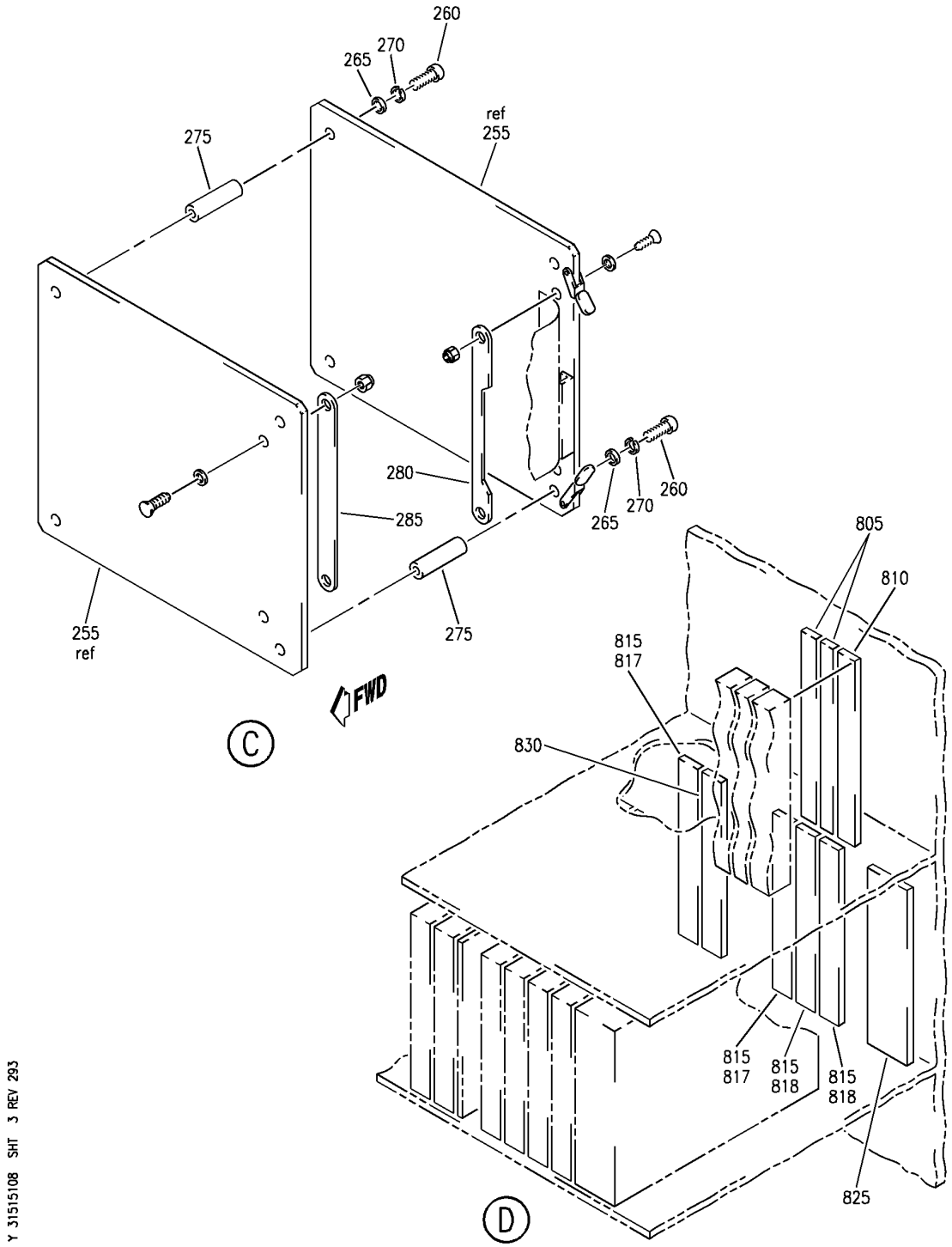

EQUIPMENT INSTL-MAIN ELECTRONICS EQPT CTR WARNING SYS
FIGURE 8 (SHEET 3)

BOEING PROPRIETARY - Copyright © - Unpublished Work - See title page for details.

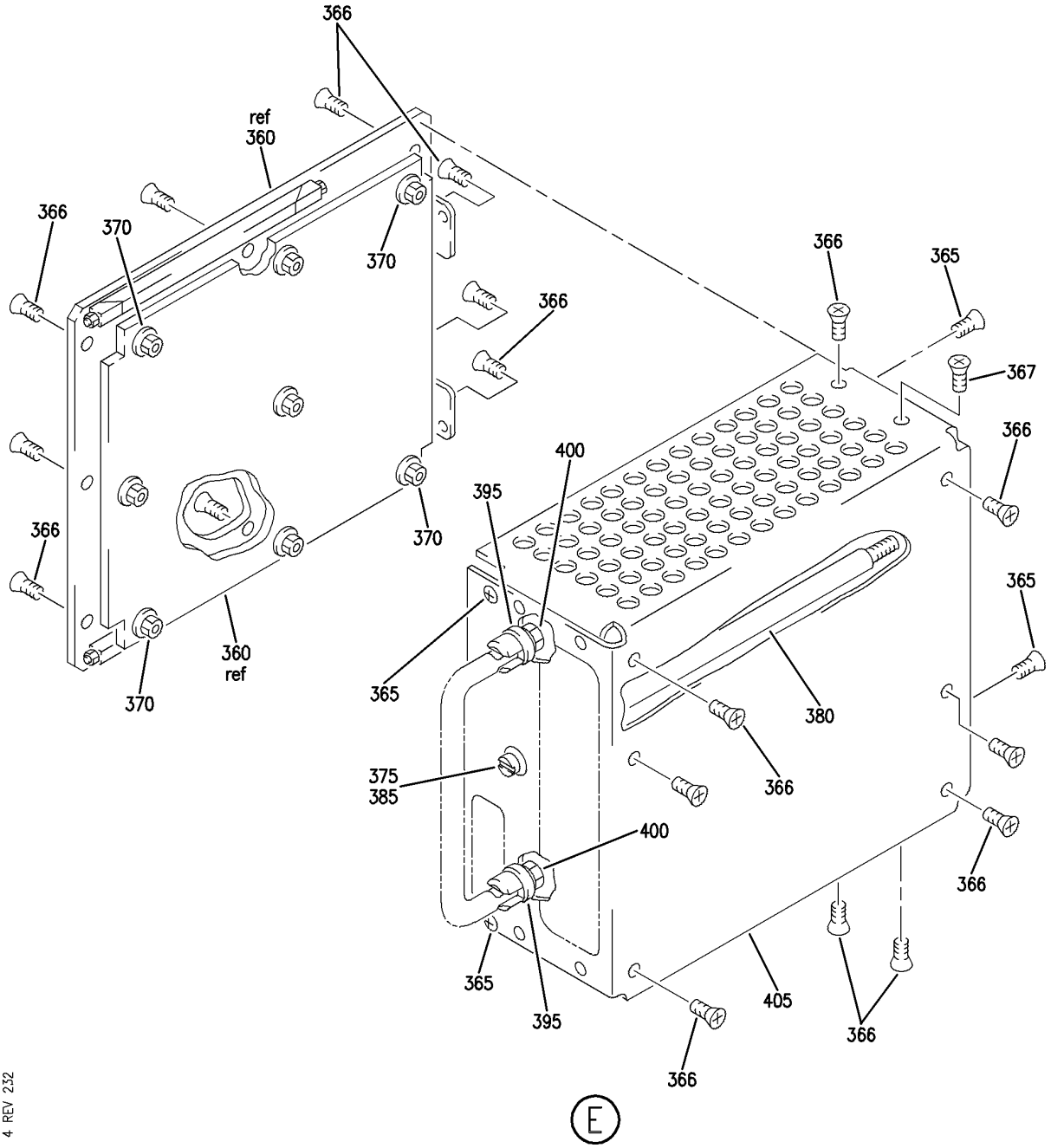

Y 31515108 SHT 4 REV 232

EQUIPMENT INSTL-MAIN ELECTRONICS EQPT CTR WARNING SYS
FIGURE 8 (SHEET 4)

BOEING PROPRIETARY - Copyright © - Unpublished Work - See title page for details.

FIG ITEM	PART NUMBER	1 2 3 4 5 6 7 NOMENCLATURE	EFFECT FROM TO	UNITS PER ASSY
8				
		EQUIPMENT INSTL-MAIN	103106	
		ELECTRONICS EQPT CTR	108120	
		WARNING SYS		
- 1	MODREF10139	EQUIPMENT INSTL-MAIN	103106	1
		ELECTRONICS EQPT CTR		
		AURAL WARNING CLACKER		
		WAILER		
		MODULE NUMBER:		
		284N4000-310011 REV A		
5	285N0041-10	.PRINTED CIRCUIT ASSY-	103106	2
		SUPPLIER CODE:		
		V89954		
		ELECTRICAL EQUIP NUMBER:		
		M10421		
		M10422		
		COMPONENT MAINT MANUAL REF:		
		31-51-71		
5	285N0041-6	.PRINTED CIRCUIT ASSY-	103106	2
		SUPPLIER CODE:		
		V89954		
		ELECTRICAL EQUIP NUMBER:		
		M10421		
		M10422		
		COMPONENT MAINT MANUAL REF:		
		31-51-71		
7	S906-10207-4	..LABEL-BAR CODE	103106	1
		MANUFACTURER		
		USED ON:		
		285N0041-10		
8	S906-10207-2	..LABEL-BAR CODE	103106	3
		PN, SERIAL NO. AND		
		MOD LEVEL		
		USED ON:		
		285N0041-10		
10	71-2LA	..EXTRACTOR-	103106	1
		SUPPLIER CODE:		
		V18915		
15	71-2RA	..EXTRACTOR-	103106	1
		SUPPLIER CODE:		
		V18915		
20	MS35214-14	..SCREW	103106	7
25	MS35338-135	..WASHER	103106	4
30	AN960PD4	..WASHER	103106	4
35	285T0032-8	..COVER ASSY-	103106	1
		SUPPLIER CODE:		
		V89954		
40	9537AB0440-3	...STANDOFF-	103106	4
		SUPPLIER CODE:		
		V06540		

MISSING ITEM NUMBERS NOT APPLICABLE

- ITEM NOT ILLUSTRATED

BOEING PROPRIETARY - Copyright © - Unpublished Work - See title page for details.

FIG ITEM	PART NUMBER	1 2 3 4 5 6 7 NOMENCLATURE	EFFECT FROM TO	UNITS PER ASSY
8				
45	285T0032-7	...COVER-PROTECTIVE SUPPLIER CODE: V89954	103106	1
- 100	284N4000-310003	EQUIPMENT INSTL-MAIN ELECTRONICS EQPT CTR LDG WARNING CONFIGURATION FOR NHA SEE: 24-00-58-05F	108120	RF
- 100	MODREF10140	EQUIPMENT INSTL-MAIN ELECTRONICS EQPT CTR LDG WARNING CONFIGURATION MODULE NUMBER: 284N4000-310012 REV A	103106	1
105	285T0031-16	.PRINTED CIRCUIT ASSY- SUPPLIER CODE: V89954 ELECTRICAL EQUIP NUMBER: M00983 COMPONENT MAINT MANUAL REF: 31-51-12 OPTIONAL PART: 285T0031-17 V89954 FUNCTIONAL REFERENCE: PLACARDS AND MARKINGS FOR DETAILS SEE 11-36-26-08	108120	1
105	285T0031-17	.PRINTED CIRCUIT ASSY- SUPPLIER CODE: V89954 ELECTRICAL EQUIP NUMBER: M00983 COMPONENT MAINT MANUAL REF: 31-51-12 OPTIONAL PART: 285T0031-16 V89954 FUNCTIONAL REFERENCE: PLACARDS AND MARKINGS FOR DETAILS SEE 11-36-26-08	108120	1

MISSING ITEM NUMBERS NOT APPLICABLE

- ITEM NOT ILLUSTRATED

BOEING PROPRIETARY - Copyright © - Unpublished Work - See title page for details.

FIG ITEM	PART NUMBER	1 2 3 4 5 6 7 NOMENCLATURE	EFFECT FROM TO	UNITS PER ASSY
8				
105	285T0031-18	.PRINTED CIRCUIT ASSY- LDG CONFIGURATION WARNING ELECTRONICS UNIT SUPPLIER CODE: V89954 ELECTRICAL EQUIP NUMBER: M00983 COMPONENT MAINT MANUAL REF: 31-51-12 FUNCTIONAL REFERENCE: PLACARDS AND MARKINGS FOR DETAILS SEE 11-36-26-08	103106	1
110	71-2LA	..EXTRACTOR- SUPPLIER CODE: V18915	103106 108120	1
115	71-2RA	..EXTRACTOR- SUPPLIER CODE: V18915	103106 108120	1
120	MS35214-14	..SCREW	103106 108120	4
125	AN60PD4	..WASHER	103106 108120	4
130	MS35338-135	..WASHER	103106 108120	4
135	285T0032-8	..COVER ASSY- SUPPLIER CODE: V89954	103106 108120	1
140	9537AB0440-3	...STANDOFF- SUPPLIER CODE: V06540	103106 108120	4
145	285T0032-7	...COVER-PROTECTIVE SUPPLIER CODE: V89954	103106 108120	1
- 150	284N4000-310007	EQUIPMENT INSTL-MAIN ELECTRONICS EQPT CTR MASTER WARNING FOR NHA SEE: 24-00-58-05	108120	RF
- 150	MODREF10135	EQUIPMENT INSTL-MAIN ELECTRONICS EQPT CTR MASTER WARNING MODULE NUMBER: 284N4000-310007 REV A	103106	1

MISSING ITEM NUMBERS NOT APPLICABLE

- ITEM NOT ILLUSTRATED

BOEING PROPRIETARY - Copyright © - Unpublished Work - See title page for details.

FIG ITEM	PART NUMBER	1 2 3 4 5 6 7 NOMENCLATURE	EFFECT FROM TO	UNITS PER ASSY
8				
155	285T0032-19	.PRINTED CIRCUIT ASSY- SUPPLIER CODE: V89954 ELECTRICAL EQUIP NUMBER: M00618 COMPONENT MAINT MANUAL REF: 31-51-13 FUNCTIONAL REFERENCE: PLACARDS AND MARKINGS FOR DETAILS SEE 11-36-26-08	103106 108120	1
160	71-2LA	..EXTRACTOR- SUPPLIER CODE: V18915	103106 108120	1
165	71-2RA	..EXTRACTOR- SUPPLIER CODE: V18915	103106 108120	1
170	MS35214-14	..SCREW	103106 108120	4
175	AN60PD4	..WASHER	103106 108120	4
180	MS35338-135	..WASHER	103106 108120	4
185	285T0032-8	..COVER ASSY- SUPPLIER CODE: V89954	103106 108120	1
190	9537AB0440-3	...STANDOFF- SUPPLIER CODE: V06540	103106 108120	4
195	285T0032-7	...COVER-PROTECTIVE SUPPLIER CODE: V89954	103106 108120	1
- 200	284N4000-310005	EQUIPMENT INSTL-MAIN ELECTRONICS EQPT CTR SIREN OWL AURAL WARNING FOR NHA SEE: 24-00-58-05	108120	RF
- 200	MODREF10133	EQUIPMENT INSTL-MAIN ELECTRONICS EQPT CTR SIREN OWL AURAL WARNING MODULE NUMBER: 284N4000-310005 REV A	103106	1

MISSING ITEM NUMBERS NOT APPLICABLE

- ITEM NOT ILLUSTRATED

BOEING PROPRIETARY - Copyright © - Unpublished Work - See title page for details.

FIG ITEM	PART NUMBER	1 2 3 4 5 6 7 NOMENCLATURE	EFFECT FROM TO	UNITS PER ASSY
8				
205	285T0034-26	.PRINTED CIRCUIT ASSY- SUPPLIER CODE: V89954 ELECTRICAL EQUIP NUMBER: M00619 M00999 COMPONENT MAINT MANUAL REF: 31-51-15 QUALIFIED I/W DATA: 285T0034-23 INTERCHANGEABLE WITH 285T0034-26, 285T0034-30 OR 285T0034-31 EXCEPT TCAS SYSTEM OPERATION REQUIRES INSTALLATION OF 285T0034-26 OR 285T0034-30. FUNCTIONAL REFERENCE: PLACARDS AND MARKINGS FOR DETAILS SEE 11-36-26-08	103106 108120	2
205	285T0034-30	.PRINTED CIRCUIT ASSY- SUPPLIER CODE: V89954 ELECTRICAL EQUIP NUMBER: M00619 M00999 COMPONENT MAINT MANUAL REF: 31-51-15 QUALIFIED I/W DATA: 285T0034-23 INTERCHANGEABLE WITH 285T0034-26, 285T0034-30 OR 285T0034-31 EXCEPT TCAS SYSTEM OPERATION REQUIRES INSTALLATION OF 285T0034-26 OR 285T0034-30.	103106 108120	2

MISSING ITEM NUMBERS NOT APPLICABLE

– ITEM NOT ILLUSTRATED

BOEING PROPRIETARY - Copyright © - Unpublished Work - See title page for details.

FIG ITEM	PART NUMBER	1 2 3 4 5 6 7 NOMENCLATURE	EFFECT FROM TO	UNITS PER ASSY
8				
205	285T0034-31	.PRINTED CIRCUIT ASSY- SUPPLIER CODE: V89954 ELECTRICAL EQUIP NUMBER: M00619 M00999 COMPONENT MAINT MANUAL REF: 31-51-15 QUALIFIED I/W DATA: 285T0034-23 INTERCHANGEABLE WITH 285T0034-26, 285T0034-30 OR 285T0034-31 EXCEPT TCAS SYSTEM OPERATION REQUIRES INSTALLATION OF 285T0034-26 OR 285T0034-30.	103106 108120	2
210	71-2LA	..EXTRACTOR- SUPPLIER CODE: V18915	103106 108120	1
215	71-2RA	..EXTRACTOR- SUPPLIER CODE: V18915	103106 108120	1
220	MS35214-14	..SCREW	103106 108120	7
225	MS35338-40	..WASHER	103106 108120	4
230	AN960PD4	..WASHER	103106 108120	4
235	285T0032-8	..COVER ASSY- SUPPLIER CODE: V89954	103106 108120	1
240	9537AB0440-3	...STANDOFF- SUPPLIER CODE: V06540	103106 108120	4
245	285T0032-7	...COVER-PROTECTIVE SUPPLIER CODE: V89954	103106 108120	1
- 250	284N4000-310009	EQUIPMENT INSTL-MAIN ELECTRONICS EQPT CTR CHIME AURAL WARNING FOR NHA SEE: 24-00-58-05F	108120	RF
- 250	MODREF10141	EQUIPMENT INSTL-MAIN ELECTRONICS EQPT CTR CHIME AURAL WARNING MODULE NUMBER: 284N4000-310013 REV A	103106	1

MISSING ITEM NUMBERS NOT APPLICABLE

- ITEM NOT ILLUSTRATED

BOEING PROPRIETARY - Copyright © - Unpublished Work - See title page for details.

FIG ITEM	PART NUMBER	1 2 3 4 5 6 7 NOMENCLATURE	EFFECT FROM TO	UNITS PER ASSY
8				
255	285T0385-6	.MODULE ASSY- SUPPLIER CODE: V89954 ELECTRICAL EQUIP NUMBER: M01000 COMPONENT MAINT MANUAL REF: 31-51-10 POST SERVICE BULLETIN: 34-0227	103106 108120	1
260	NAS1801-06-6	..SCREW	103106 108120	4
265	AN960D6L	..WASHER- SERVICE BULLETIN OPT DATA: NAS1149DN616H	103106 108120	4
265	NAS1149DN616H	..WASHER- SERVICE BULLETIN OPT DATA: AN960D6L	103106 108120	4
270	MS35338-117	..WASHER- SERVICE BULLETIN OPT DATA: BACW10EC06M	103106 108120	4
270	BACW10EC06M	..WASHER- SERVICE BULLETIN OPT DATA: MS35338-117	103106 108120	4
275	69B46200-27	..STANDOFF	103106 108120	4
280	285T0394-4	..STRAP ASSY- SUPPLIER CODE: V89954 OPTIONAL PART: 285T0394-9 V89954 285T0394-11 V89954	103106 108120	1
280	285T0394-9	..STRAP ASSY- SUPPLIER CODE: V89954 OPTIONAL PART: 285T0394-4 V89954 285T0394-11 V89954	103106 108120	1
280	285T0394-11	..STRAP ASSY- SUPPLIER CODE: V89954 OPTIONAL PART: 285T0394-4 V89954 285T0394-9 V89954	103106 108120	1

MISSING ITEM NUMBERS NOT APPLICABLE

– ITEM NOT ILLUSTRATED

BOEING PROPRIETARY - Copyright © - Unpublished Work - See title page for details.

FIG ITEM	PART NUMBER	1 2 3 4 5 6 7 NOMENCLATURE	EFFECT FROM TO	UNITS PER ASSY
8				
285	285T0394-1	..STRAP ASSY- SUPPLIER CODE: V89954 OPTIONAL PART: 285T0394-7 V89954	103106 108120	1
285	285T0394-7	..STRAP ASSY- SUPPLIER CODE: V89954 OPTIONAL PART: 285T0394-1 V89954 ATTACHING PARTS	103106 108120	1
- 290	MS35214-13	..SCREW	103106 108120	4
- 295	NAS620-4	..WASHER	103106 108120	4
- 300	BRH10A04	..NUT SUPPLIER CODE: V52828 SPECIFICATION NUMBER: BACN10JC04 OPTIONAL PART: NS202101-40 V80539 RMLH9075-40W V72962 VN303A40 V92215 96-40 V80539 T6S440J V11815 H10-04BAC V15653 -------*-------	103106 108120	4
- 305	284N4000-310008	EQUIPMENT INSTL-MAIN ELECTRONICS EQPT CTR TAKE OFF WARNING CONFIGURATION FOR NHA SEE: 24-00-58-05	108120	RF
- 305	MODREF10136	EQUIPMENT INSTL-MAIN ELECTRONICS EQPT CTR TAKE OFF WARNING CONFIGURATION MODULE NUMBER: 284N4000-310008 REV A	103106	1

MISSING ITEM NUMBERS NOT APPLICABLE

- ITEM NOT ILLUSTRATED

BOEING PROPRIETARY - Copyright © - Unpublished Work - See title page for details.

	FIG ITEM	PART NUMBER	1 2 3 4 5 6 7 NOMENCLATURE	EFFECT FROM TO	UNITS PER ASSY
	8				
R	310	285T0259-19	.PRINTED CIRCUIT ASSY-	103106	1
R			SUPPLIER CODE:	108120	
R			V89954		
R			MISCELLANEOUS DATA:		
R			285T0259-19, -20		
R			AND -21 ARE ALL		
R			INTERCHANGEABLE		
R			ELECTRICAL EQUIP NUMBER:		
R			M00620		
R			COMPONENT MAINT MANUAL REF:		
R			31-51-11		
R			FUNCTIONAL REFERENCE:		
R			PLACARDS AND MARKINGS		
R			FOR DETAILS SEE		
R			11-36-26-08		
R	310	285T0259-20	.PRINTED CIRCUIT ASSY-	103106	1
R			TAKEOFF CONFIGURATION	108120	
R			SUPPLIER CODE:		
R			V89954		
R			MISCELLANEOUS DATA:		
R			285T0259-19, -20		
R			AND -21 ARE ALL		
R			INTERCHANGEABLE		
R			ELECTRICAL EQUIP NUMBER:		
R			M00620		
R			FUNCTIONAL REFERENCE:		
R			PLACARDS AND MARKINGS		
R			FOR DETAILS SEE		
R			11-36-26-08		
R	310	285T0259-21	.PRINTED CIRCUIT ASSY-	103106	1
R			TAKEOFF CONFIGURATION	108120	
R			SUPPLIER CODE:		
R			V89954		
R			MISCELLANEOUS DATA:		
R			285T0259-19, -20		
R			AND -21 ARE ALL		
R			INTERCHANGEABLE		
R			ELECTRICAL EQUIP NUMBER:		
R			M00620		
R			FUNCTIONAL REFERENCE:		
R			PLACARDS AND MARKINGS		
R			FOR DETAILS SEE		
R			11-36-26-08		
	315	71-2LA	..EXTRACTOR-	103106	1
			SUPPLIER CODE:	108120	
			V18915		
	320	71-2RA	..EXTRACTOR-	103106	1
			SUPPLIER CODE:	108120	
			V18915		

MISSING ITEM NUMBERS NOT APPLICABLE

– ITEM NOT ILLUSTRATED

BOEING PROPRIETARY - Copyright © - Unpublished Work - See title page for details.

FIG ITEM	PART NUMBER	1 2 3 4 5 6 7 NOMENCLATURE	EFFECT FROM TO	UNITS PER ASSY
8				
325	MS35214-14	..SCREW	103106 108120	4
330	AN960PD4	..WASHER	103106 108120	4
335	MS35338-135	..WASHER	103106 108120	4
340	285T0032-8	..COVER ASSY- SUPPLIER CODE: V89954	103106 108120	1
345	9537AB0440-3	...STANDOFF- SUPPLIER CODE: V06540	103106 108120	4
350	285T0032-7	...COVER-PROTECTIVE SUPPLIER CODE: V89954	103106 108120	1
- 355	284N4000-310006	EQUIPMENT INSTL-MAIN ELECTRONICS EQPT CTR PWR SUPPLY FOR NHA SEE: 24-00-58-05	108120	RF
- 355	MODREF10134	EQUIPMENT INSTL-MAIN ELECTRONICS EQPT CTR PWR SUPPLY MODULE NUMBER: 284N4000-310006 REV A	103106	1

MISSING ITEM NUMBERS NOT APPLICABLE

- ITEM NOT ILLUSTRATED

BOEING PROPRIETARY - Copyright © - Unpublished Work - See title page for details.

	FIG ITEM	PART NUMBER	1 2 3 4 5 6 7 NOMENCLATURE	EFFECT FROM TO	UNITS PER ASSY
	8				
R	360	285T0035-202	.POWER SUPPLY-	103106	2
R			SUPPLIER CODE:	108120	
R			V89954		
R			FUNCTIONAL DESCRIPTION:		
R			THE WARNING ELECTRONICS		
R			UNIT POWER SUPPLY UNIT		
R			(WEUPSU) IS ONE OF TWO		
R			POWER SUPPLY UNITS		
R			SUPPLYING REGULATED DC		
R			POWER TO THE WEU. EACH		
R			IS POWERED FROM		
R			INDEPENDENT, SINGLE		
R			PHASE 115V AC BUS.		
R			MISCELLANEOUS DATA:		
R			285T0035-202 MOD A		
R			REPLACES CUT AND		
R			JUMPERED PWA WITH A		
R			CLEAN PWA		
R			ELECTRICAL EQUIP NUMBER:		
R			M00616		
R			M00621		
R			COMPONENT MAINT MANUAL REF:		
R			31-51-20		
R			FUNCTIONAL REFERENCE:		
R			PLACARDS AND MARKINGS		
R			FOR DETAILS SEE		
R			11-36-26-08		
	360	285T0035-9	.POWER SUPPLY-	103106	2
			SUPPLIER CODE:	108120	
			V89954		
			ELECTRICAL EQUIP NUMBER:		
			M00616		
			M00621		
			COMPONENT MAINT MANUAL REF:		
			31-51-20		
	360	285T0035-10	.POWER SUPPLY-	103106	2
			SUPPLIER CODE:	108120	
			V89954		
			ELECTRICAL EQUIP NUMBER:		
			M00616		
			M00621		
			COMPONENT MAINT MANUAL REF:		
			31-51-20		

MISSING ITEM NUMBERS NOT APPLICABLE

– ITEM NOT ILLUSTRATED

BOEING PROPRIETARY - Copyright © - Unpublished Work - See title page for details.

FIG ITEM	PART NUMBER	1 2 3 4 5 6 7 NOMENCLATURE	EFFECT FROM TO	UNITS PER ASSY
8				
360	285T0035-11	.POWER SUPPLY- SUPPLIER CODE: V89954 ELECTRICAL EQUIP NUMBER: M00616 M00621 COMPONENT MAINT MANUAL REF: 31-51-20	103106 108120	2
365	MS24693C2	..SCREW- USED ON: 285T0035-202	103106 108120	4
366	NAS514P440-4P	..SCREW- USED ON: 285T0035-9 285T0035-10 285T0035-11	103106 108120	18
367	NAS514P440-3P	..SCREW- USED ON: 285T0035-9 285T0035-10 285T0035-11	103106 108120	1
370	MS21043-06	..NUT- USED ON: 285T0035-202	103106 108120	8
375	MS16624-1025	..RING-RETAINING USED ON: 285T0035-9 285T0035-10 285T0035-11 285T0035-202	103106 108120	1
380	285T0333-15	..SCREW- SUPPLIER CODE: V89954 USED ON: 285T0035-202	103106 108120	1
380	285T0333-3	..SCREW- SUPPLIER CODE: V89954 USED ON: 285T0035-9 285T0035-10 285T0035-11	103106 108120	1

MISSING ITEM NUMBERS NOT APPLICABLE

– ITEM NOT ILLUSTRATED

BOEING PROPRIETARY - Copyright © - Unpublished Work - See title page for details.

FIG ITEM	PART NUMBER	1 2 3 4 5 6 7 NOMENCLATURE	EFFECT FROM TO	UNITS PER ASSY
8				
385	RR2002-4B2	..GROMMET-	103106	1
		SUPPLIER CODE:	108120	
		V57268		
		SPECIFICATION NUMBER:		
		BACG20AF4B2		
		OPTIONAL PART:		
		G6940-4B2		
		V75345		
		SZ6924-4B2		
		V95272		
		701-4B2		
		V07096		
		E4B2		
		V60980		
		H4B2		
		V60980		
		USED ON:		
		285T0035-9		
		285T0035-10		
		285T0035-11		
		285T0035-202		
395	BACW10P9AL	..WASHER-	103106	2
		USED ON:	108120	
		285T0035-9		
		285T0035-10		
		285T0035-11		
		285T0035-202		
400	NAS1291C4M	..NUT-	103106	2
		USED ON:	108120	
		285T0035-9		
		285T0035-10		
		285T0035-11		
		285T0035-202		
405	285T0381-1	..COVER-	103106	1
		SUPPLIER CODE:	108120	
		V89954		
		USED ON:		
		285T0035-202		
405	285T0339-12	..COVER-	103106	1
		SUPPLIER CODE:	108120	
		V89954		
		OPTIONAL PART:		
		285T0339-18		
		V89954		
		USED ON:		
		285T0035-9		
		285T0035-10		
		285T0035-11		

MISSING ITEM NUMBERS NOT APPLICABLE

— ITEM NOT ILLUSTRATED

BOEING PROPRIETARY - Copyright © - Unpublished Work - See title page for details.

FIG ITEM	PART NUMBER	1 2 3 4 5 6 7 NOMENCLATURE	EFFECT FROM TO	UNITS PER ASSY
8				
405	285T0339-18	..SHIELD-	103106	1
		SUPPLIER CODE:	108120	
		V89954		
		OPTIONAL PART:		
		285T0339-12		
		V89954		
		USED ON:		
		285T0035-9		
		285T0035-10		
		285T0035-11		
R - 802	286N1451-389	WIRE BUNDLE ASSY	108120	1
- 803	286N1451-701	WIRE BUNDLE ASSY	103106	1
805	300052-001	.CONNECTOR-	103106	2
		SUPPLIER CODE:	108120	
		V0D9V3		
		SPECIFICATION NUMBER:		
		BACC65L66		
		OPTIONAL PART:		
		200620-01		
		V16512		
		300052-001		
		V03877		
		192-366-0010		
		V26742		
		S1009-00833		
		V03877		
		ELECTRICAL EQUIP NUMBER:		
		D00905		
		D00815		
		WIRING DIAGRAM REF:		
		315111		
		315135		
		315136		
		REWORKED BY SB:		
		34-0227		

MISSING ITEM NUMBERS NOT APPLICABLE

- ITEM NOT ILLUSTRATED

BOEING PROPRIETARY - Copyright © - Unpublished Work - See title page for details.

FIG ITEM	PART NUMBER	1 2 3 4 5 6 7 NOMENCLATURE	EFFECT FROM TO	UNITS PER ASSY
8				
815	300052-001	.CONNECTOR-	103106	4
		SUPPLIER CODE:		
		V0D9V3		
		SPECIFICATION NUMBER:		
		BACC65L66		
		OPTIONAL PART:		
		200620-01		
		V16512		
		300052-001		
		V03877		
		192-366-0010		
		V26742		
		S1009-00833		
		V03877		
		ELECTRICAL EQUIP NUMBER:		
		D00113		
		D00115		
		D00901		
		D00117		
		WIRING DIAGRAM REF:		
		315121		
		315132		
		315131		
		315141		
817	300052-001	.CONNECTOR-	108120	2
		SUPPLIER CODE:		
		V0D9V3		
		SPECIFICATION NUMBER:		
		BACC65L66		
		OPTIONAL PART:		
		200620-01		
		V16512		
		300052-001		
		V03877		
		192-366-0010		
		V26742		
		S1009-00833		
		V03877		
		ELECTRICAL EQUIP NUMBER:		
		D00113		
		D00117		
		WIRING DIAGRAM REF:		
		315121		
		315141		

MISSING ITEM NUMBERS NOT APPLICABLE

– ITEM NOT ILLUSTRATED

BOEING PROPRIETARY - Copyright © - Unpublished Work - See title page for details.

FIG ITEM	PART NUMBER	1 2 3 4 5 6 7 NOMENCLATURE	EFFECT FROM TO	UNITS PER ASSY
8				
818	300052-001	.CONNECTOR-	108120	2
		SUPPLIER CODE:		
		V0D9V3		
		SPECIFICATION NUMBER:		
		BACC65L66		
		OPTIONAL PART:		
		200620-01		
		V16512		
		300052-001		
		V03877		
		192-366-0010		
		V26742		
		S1009-00833		
		V03877		
		ELECTRICAL EQUIP NUMBER:		
		D00901		
		D00115		
		WIRING DIAGRAM REF:		
		315131		
		315132		
		REWORKED BY SB:		
		34-0227		
820	M24308-2-32	.RECEPTACLE-	103106	2
		ELECTRICAL EQUIP NUMBER:	108120	
		D00105		
		D00107		
		WIRING DIAGRAM REF:		
		315111		
		315112		
825	300052-001	.CONNECTOR-	103106	1
		SUPPLIER CODE:	108120	
		V0D9V3		
		SPECIFICATION NUMBER:		
		BACC65L66		
		OPTIONAL PART:		
		200620-01		
		V16512		
		300052-001		
		V03877		
		192-366-0010		
		V26742		
		S1009-00833		
		V03877		
		ELECTRICAL EQUIP NUMBER:		
		D00903		
		WIRING DIAGRAM REF:		
		315133		

MISSING ITEM NUMBERS NOT APPLICABLE

— ITEM NOT ILLUSTRATED

BOEING PROPRIETARY - Copyright © - Unpublished Work - See title page for details.

FIG ITEM	PART NUMBER	1 2 3 4 5 6 7 NOMENCLATURE	EFFECT FROM TO	UNITS PER ASSY
8				
830	300052-001	.CONNECTOR-	103106	1
		SUPPLIER CODE:	108120	
		V0D9V3		
		SPECIFICATION NUMBER:		
		BACC65L66		
		OPTIONAL PART:		
		200620-01		
		V16512		
		300052-001		
		V03877		
		192-366-0010		
		V26742		
		S1009-00833		
		V03877		
		ELECTRICAL EQUIP NUMBER:		
		D00595		
		WIRING DIAGRAM REF:		
		315142		

MISSING ITEM NUMBERS NOT APPLICABLE

– ITEM NOT ILLUSTRATED

BOEING PROPRIETARY - Copyright © - Unpublished Work - See title page for details.

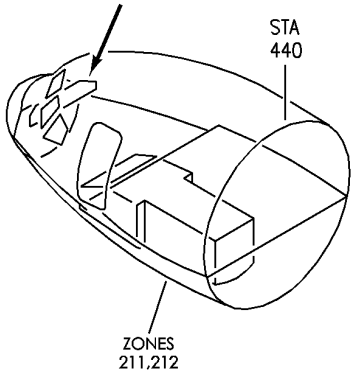

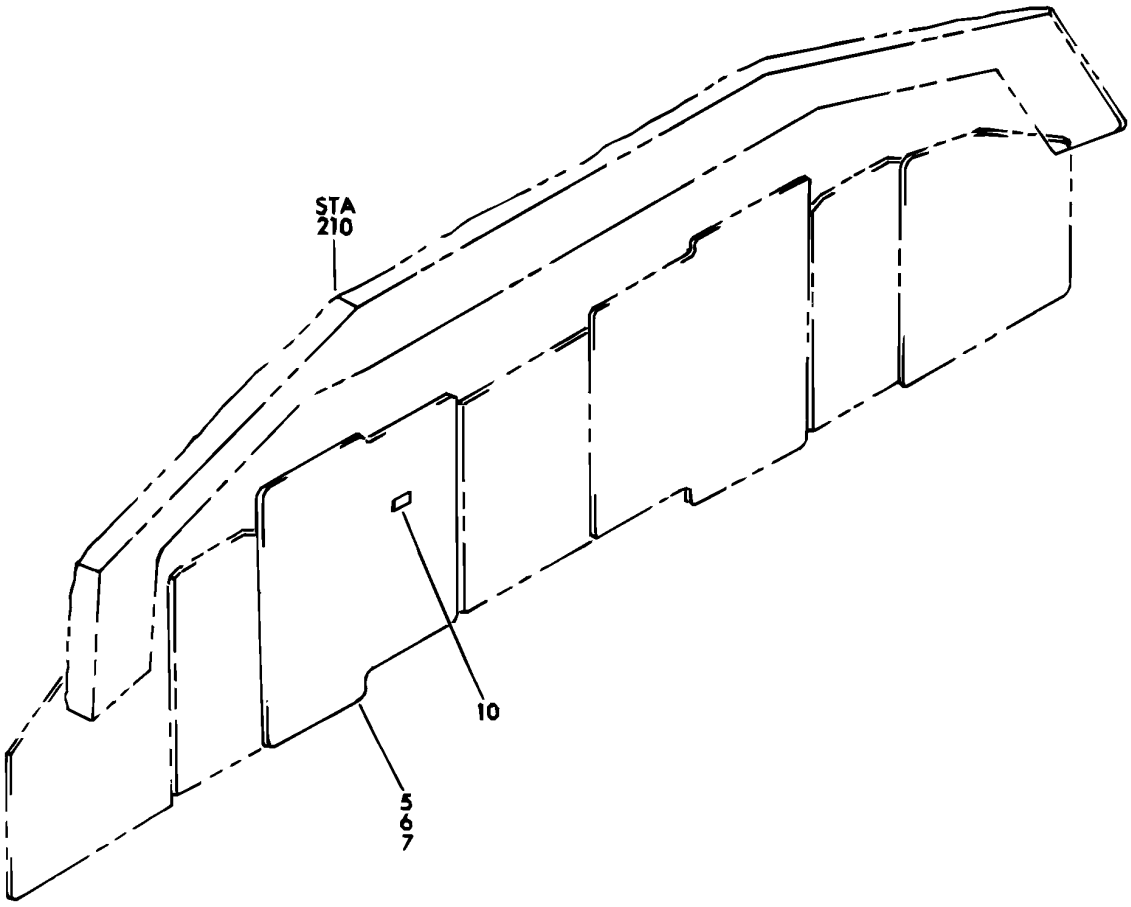

Y 31515201 SHT 1 REV 229

PANEL INSTL-CAPT AND FIRST OFFICER FWD (CAUTION AND WARNING SYSTEM ONLY)
FIGURE 1

BOEING PROPRIETARY - Copyright © - Unpublished Work - See title page for details.

FIG ITEM	PART NUMBER	1 2 3 4 5 6 7 NOMENCLATURE	EFFECT FROM TO	UNITS PER ASSY
1				
		PANEL INSTL-CAPT AND FIRST	002004	
		OFFICER FWD (CAUTION	006010	
		AND WARNING SYSTEM ONLY)	107107	
			121503	
			904999	
- 1	233N2101-1	PANEL INSTL-CAPT AND FIRST	002004	RF
		OFFICER (CAUTION	006010	
		AND WARNING SYSTEM ONLY)	107107	
		POSITION DATA:	121503	
		FWD	904999	
		VARIABLE DRAWING REF:		
		233N2101-5003		
		233N2101-5004		
		233N2101-5037		
		233N2101-5039		
		233N2101-5041		
		FOR NHA/OTHER SYS DET SEE:		
		25-10-00-05A		
6	233N2221-51	.MODULE ASSY-P1-3	002004	RF
			006010	
			950999	
6	233N2221-59	.MODULE ASSY-P1-3	107107	RF
6	233N2221-62	.MODULE ASSY-P1-3	121503	RF
			904949	
10	BCREF7112	..LIGHT ASSY-SPEED BRAKES	002004	1
		IND	006010	
		SUPPLIER CODE:	107107	
		V81590	121503	
		OVERLENGTH PART NUMBER:	904999	
		434-674-1005-1300		
		SPECIFICATION NUMBER:		
		S231T300-1300		
		ELECTRICAL EQUIP NUMBER:		
		L00716		
		OPTIONAL PART:		
		BCREF8600		
		V81590		
		USED ON:		
		233N2221-26		
		233N2221-27		
		233N2221-28		
		233N2221-29		
		233N2221-30		
		233N2221-31		
		233N2221-32		
		233N2221-33		
		233N2221-34		
		233N2221-35		
		233N2221-36		

MISSING ITEM NUMBERS NOT APPLICABLE

- ITEM NOT ILLUSTRATED

BOEING PROPRIETARY - Copyright © - Unpublished Work - See title page for details.

FIG ITEM	PART NUMBER	1 2 3 4 5 6 7 NOMENCLATURE	EFFECT FROM TO	UNITS PER ASSY
1		233N2221-37 233N2221-39 233N2221-40 233N2221-41 233N2221-43 233N2221-44 233N2221-45 233N2221-46 233N2221-48 233N2221-49 233N2221-51 233N2221-52 233N2221-54 233N2221-55 233N2221-56 233N2221-58 233N2221-59 233N2221-61 233N2221-62 233N2221-63 233N2221-64 233N2221-65 233N2221-66 FOR DETAILS SEE: 33-14-70-03		

MISSING ITEM NUMBERS NOT APPLICABLE

– ITEM NOT ILLUSTRATED

BOEING PROPRIETARY - Copyright © - Unpublished Work - See title page for details.

FIG ITEM	PART NUMBER	1 2 3 4 5 6 7 NOMENCLATURE	EFFECT FROM TO	UNITS PER ASSY
1				
10	BCREF8600	..LIGHT ASSY-SPEED BRAKES IND	002004 006010	1
		SUPPLIER CODE: V81590	107107 121503	
		OVERLENGTH PART NUMBER: 434-674-1031-2300	904999	
		SPECIFICATION NUMBER: S231T300-2300		
		OPTIONAL PART: BCREF7112 V81590		
		USED ON: 233N2221-26 233N2221-27 233N2221-28 233N2221-29 233N2221-30 233N2221-31 233N2221-32 233N2221-33 233N2221-34 233N2221-35 233N2221-36 233N2221-37 233N2221-39 233N2221-40 233N2221-41 233N2221-43 233N2221-44 233N2221-45 233N2221-46 233N2221-48 233N2221-49 233N2221-51 233N2221-52 233N2221-54 233N2221-55 233N2221-56 233N2221-58 233N2221-59 233N2221-61 233N2221-62 233N2221-63 233N2221-64 233N2221-65 233N2221-66		
		FOR DETAILS SEE: 33-14-70-03		

MISSING ITEM NUMBERS NOT APPLICABLE

— ITEM NOT ILLUSTRATED

BOEING PROPRIETARY - Copyright © - Unpublished Work - See title page for details.

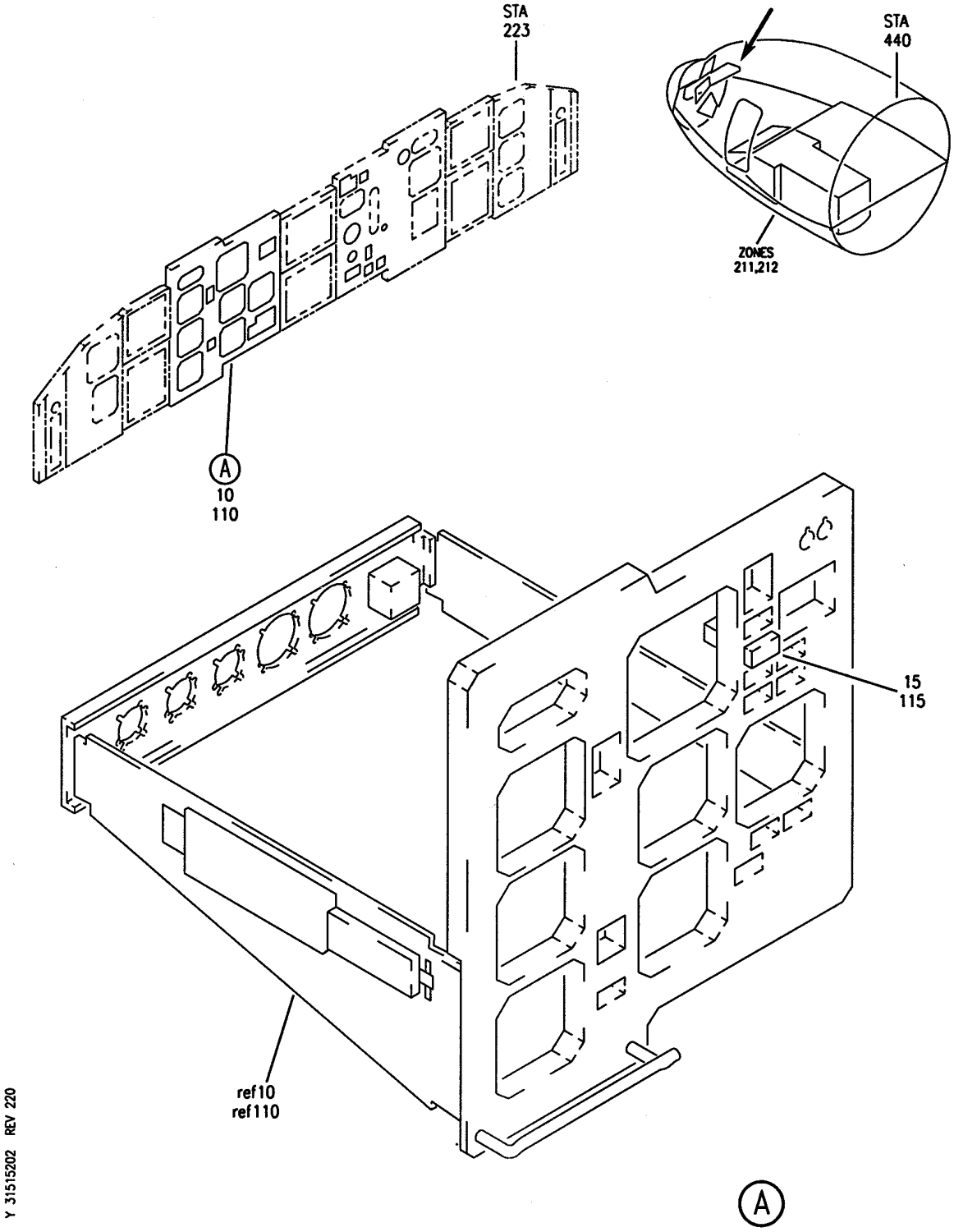

PANEL INSTL-CAPT AND FIRST OFFICER FWD AND P1-3 (WARNING SYSTEM ONLY)
FIGURE 2

BOEING PROPRIETARY - Copyright © - Unpublished Work - See title page for details.

FIG ITEM	PART NUMBER	1 2 3 4 5 6 7 NOMENCLATURE	EFFECT FROM TO	UNITS PER ASSY
2				
		PANEL INSTL-CAPT AND FIRST	011106	
		OFFICER FWD AND P1-3	108120	
		(WARNING SYSTEM ONLY)	504903	
- 1	233N2101-1	PANEL INSTL-CAPT AND FIRST	011100	RF
		OFFICER (WARNING SYSTEM		
		ONLY)		
		POSITION DATA:		
		FWD		
		VARIABLE DRAWING REF:		
		233N2101-5039		
		FOR NHA/OTHER SYS DET SEE:		
		25-10-00-05A		
- 5	233N2221-301	.MODULE ASSY-P1-3	011100	RF
		COMPONENT MAINT MANUAL REF:		
		31-11-48		
- 5	233N2221-307	.MODULE ASSY-P1-3	108120	RF
		COMPONENT MAINT MANUAL REF:		
		31-11-48		
- 5	233N2221-317	.MODULE ASSY-P1-3	504903	RF
		COMPONENT MAINT MANUAL REF:		
		31-11-48		
10	233N2221-51	..MODULE ASSY-	011100	RF
10	233N2221-59	..MODULE ASSY-	108120	RF
10	233N2221-74	..MODULE ASSY-	504903	RF
15	BCREF7112	...LIGHT ASSY-SPEED BRAKES	011100	1
		IND		
		SUPPLIER CODE:		
		V81590		
		OVERLENGTH PART NUMBER:		
		434-674-1005-1300		
		SPECIFICATION NUMBER:		
		S231T300-1300		
		ELECTRICAL EQUIP NUMBER:		
		L00716		
		OPTIONAL PART:		
		BCREF8600		
		V81590		
		FOR DETAILS SEE:		
		33-14-70-03		

MISSING ITEM NUMBERS NOT APPLICABLE

- ITEM NOT ILLUSTRATED

BOEING PROPRIETARY - Copyright © - Unpublished Work - See title page for details.

FIG ITEM	PART NUMBER	1 2 3 4 5 6 7 NOMENCLATURE	EFFECT FROM TO	UNITS PER ASSY
2				
15	BCREF8600	...LIGHT ASSY-SPEED BRAKES IND SUPPLIER CODE: V81590 OVERLENGTH PART NUMBER: 434-674-1031-2300 SPECIFICATION NUMBER: S231T300-2300 OPTIONAL PART: BCREF7112 V81590 FOR DETAILS SEE: 33-14-70-03	011100	1
- 100	233N2103-10	PANEL INSTL-P1-3 (WARNING SYSTEM ONLY) FOR NHA/OTHER SYS DET SEE: 25-10-00-15B	108120	RF
- 100	233N2103-72	PANEL INSTL-P1-3 (WARNING SYSTEM ONLY) FOR NHA/OTHER SYS DET SEE: 25-10-00-15B	101102	RF
- 100	233N2103-280	PANEL INSTL-P1-3 (WARNING SYSTEM ONLY) FOR NHA/OTHER SYS DET SEE: 25-10-00-15B	504903	RF

MISSING ITEM NUMBERS NOT APPLICABLE

- ITEM NOT ILLUSTRATED

BOEING PROPRIETARY - Copyright © - Unpublished Work - See title page for details.

FIG ITEM	PART NUMBER	1 2 3 4 5 6 7 NOMENCLATURE	EFFECT FROM TO	UNITS PER ASSY
2				
- 104	MODREF31741	PANEL INSTL-P1-3 (WARNING SYSTEM ONLY) MODULE NUMBER: 233N2103-425 REV A FOR OTHER SYS DETAILS SEE: 11-31-01-38 22-11-02-03 22-14-01-03 22-31-02-01 22-34-51-02 26-17-51-05 27-51-57-03 27-58-00-02 27-81-00-01 29-21-55-02 31-11-11-19 31-11-16-01 31-11-26-38 31-25-01-03 31-41-52-02 32-35-52-03 32-41-52-02 32-42-55-03 32-46-00-01 32-61-51-03 33-13-57-01A 33-16-52-03 34-12-01-03 34-13-01-03 34-13-02-01 34-13-05-01 34-13-06-01 34-16-51-03 34-21-02-02 34-22-02-02 34-22-05-01A 34-22-06-01 34-24-01-03 34-32-00-02 34-46-51-02 34-51-02-02 34-57-00-01 34-61-01-07 34-61-02-02 77-41-01-01 79-33-51-05	103105	1

MISSING ITEM NUMBERS NOT APPLICABLE

– ITEM NOT ILLUSTRATED

BOEING PROPRIETARY - Copyright © - Unpublished Work - See title page for details.

FIG ITEM	PART NUMBER	1 2 3 4 5 6 7 NOMENCLATURE	EFFECT FROM TO	UNITS PER ASSY
2				
- 104	MODREF104335	PANEL INSTL-P1-3 (WARNING SYSTEM ONLY) MODULE NUMBER: 233N2103-425 REV B FOR OTHER SYS DETAILS SEE: 11-31-01-38 22-11-02-03 22-14-01-03 22-31-02-01 22-34-51-02 26-17-51-05 27-51-57-03 27-58-00-02 27-81-00-01 29-21-55-02 31-11-11-19 31-11-16-01 31-11-26-38 31-25-01-03 31-41-52-02 32-35-52-03 32-41-52-02 32-42-55-03 32-46-00-01 32-61-51-03 33-13-57-01A 33-16-52-03 34-12-01-03 34-13-01-03 34-13-02-01 34-13-05-01 34-13-06-01 34-16-51-03 34-21-02-02 34-22-02-02 34-22-05-01A 34-22-06-01 34-24-01-03 34-32-00-02 34-46-51-02 34-51-02-02 34-57-00-01 34-61-01-07 34-61-02-02 77-41-01-01 79-33-51-05	106106	1
- 105	233N2221-301	.MODULE ASSY- COMPONENT MAINT MANUAL REF: 31-11-48	101102 108120	RF

MISSING ITEM NUMBERS NOT APPLICABLE

- ITEM NOT ILLUSTRATED

BOEING PROPRIETARY - Copyright © - Unpublished Work - See title page for details.

FIG ITEM	PART NUMBER	1 2 3 4 5 6 7 NOMENCLATURE	EFFECT FROM TO	UNITS PER ASSY
2				
- 105	233N2221-317	.MODULE ASSY- COMPONENT MAINT MANUAL REF: 31-11-48	505505 507903	RF
- 105	RR92002-134A101	.MODULE ASSY-P1-3 POST RAPID REVISION: RR92002-134A	504504 506506	RF
- 105	233N2221-320	.MODULE ASSY- COMPONENT MAINT MANUAL REF: 31-11-48	101102 108120	RF
- 105	233N2221-325	.MODULE ASSY- COMPONENT MAINT MANUAL REF: 31-11-48	103106	RF
- 105	233N2221-326	.MODULE ASSY- COMPONENT MAINT MANUAL REF: 31-11-48	101102 108120	RF
- 106	233N2221-328	.MODULE ASSY- COMPONENT MAINT MANUAL REF: 31-11-48	101102 108120	RF
110	233N2221-51	..MODULE ASSY- USED ON: 233N2221-301	101102 108120	RF
110	233N2221-74	..MODULE ASSY	504903	RF
110	233N2221-81	..MODULE ASSY- USED ON: 233N2221-320 233N2221-326 233N2221-328	101106 108120	RF

MISSING ITEM NUMBERS NOT APPLICABLE

- ITEM NOT ILLUSTRATED

BOEING PROPRIETARY - Copyright © - Unpublished Work - See title page for details.

FIG ITEM	PART NUMBER	1 2 3 4 5 6 7 NOMENCLATURE	EFFECT FROM TO	UNITS PER ASSY
2				
115	BCREF7112	...LIGHT ASSY-SPEED BRAKES IND SUPPLIER CODE: V81590 OVERLENGTH PART NUMBER: 434-674-1005-1300 SPECIFICATION NUMBER: S231T300-1300 ELECTRICAL EQUIP NUMBER: L00716 OPTIONAL PART: BCREF8600 V81590 USED ON: 233N2221-49 233N2221-51 233N2221-54 233N2221-70 233N2221-71 233N2221-72 233N2221-74 233N2221-75 233N2221-80 233N2221-81 FOR DETAILS SEE: 33-14-70-03	101106 108120 504903	1

MISSING ITEM NUMBERS NOT APPLICABLE

– ITEM NOT ILLUSTRATED

BOEING PROPRIETARY - Copyright © - Unpublished Work - See title page for details.

FIG ITEM	PART NUMBER	1 2 3 4 5 6 7 NOMENCLATURE	EFFECT FROM TO	UNITS PER ASSY
2				
115	BCREF8600	...LIGHT ASSY-SPEED BRAKES IND SUPPLIER CODE: V81590 OVERLENGTH PART NUMBER: 434-674-1031-2300 SPECIFICATION NUMBER: S231T300-2300 OPTIONAL PART: BCREF7112 V81590 USED ON: 233N2221-49 233N2221-51 233N2221-54 233N2221-70 233N2221-71 233N2221-72 233N2221-73 233N2221-74 233N2221-75 233N2221-80 233N2221-81 233N2221-83 FOR DETAILS SEE: 33-14-70-03	101106 108120 504903	1

MISSING ITEM NUMBERS NOT APPLICABLE

– ITEM NOT ILLUSTRATED

BOEING PROPRIETARY - Copyright © - Unpublished Work - See title page for details.

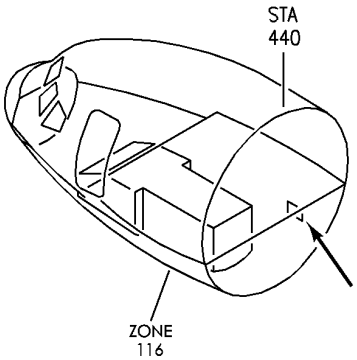

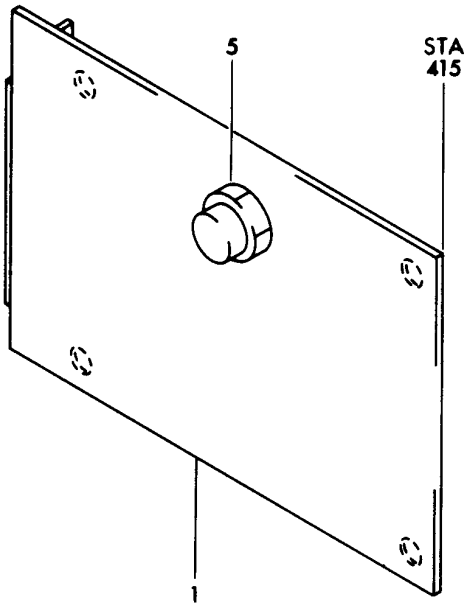

Y 31516101 SHT 1 REV 229

PRINTED CIRCUIT ASSY-WEU BITE DISPLAY
FIGURE 1

BOEING PROPRIETARY - Copyright © - Unpublished Work - See title page for details.

FIG ITEM	PART NUMBER	1 2 3 4 5 6 7 NOMENCLATURE	EFFECT FROM TO	UNITS PER ASSY
1				
		PRINTED CIRCUIT ASSY-WEU	002004	
		BITE DISPLAY	006999	
1	285T1111-1	PRINTED CIRCUIT ASSY-	002004	RF
		WEU BITE DISPLAY	006999	
		SUPPLIER CODE:		
		V89954		
		COMPONENT MAINT MANUAL REF:		
		27-32-53		
		FOR NHA/OTHER SYS DET SEE:		
		53-11-63-03		
		53-11-63-03A		
		53-11-63-03B		
5	P4-10065-22	.SWITCH-ELEC PANEL ASSY	002004	1
		SUPPLIER CODE:	006999	
		V21649		
		ELECTRICAL EQUIP NUMBER:		
		S00560		

MISSING ITEM NUMBERS NOT APPLICABLE

– ITEM NOT ILLUSTRATED

BOEING PROPRIETARY - Copyright © - Unpublished Work - See title page for details.

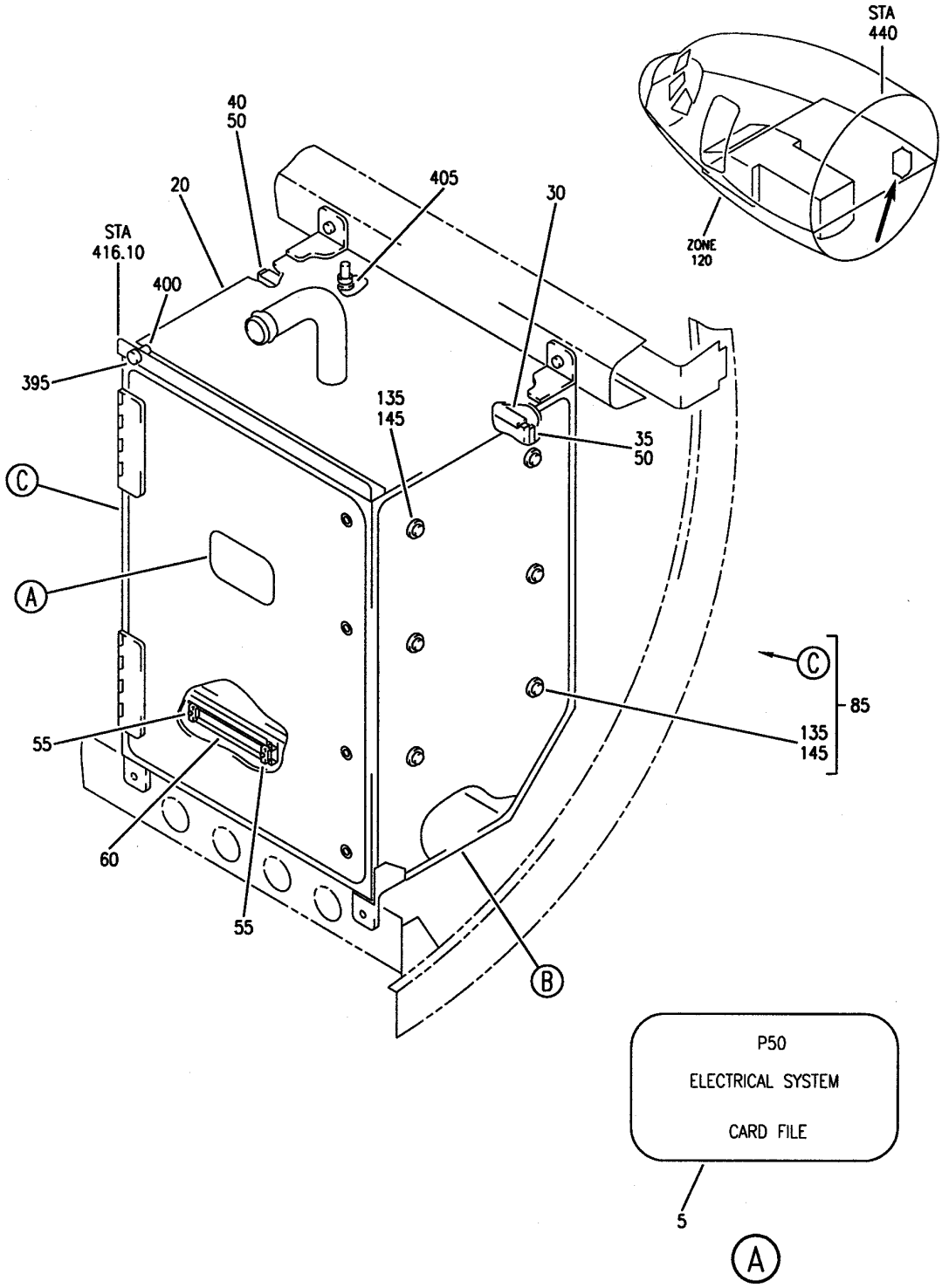

Y 31516102 SHT 1 REV 219

FILE INSTL-ELECTRICAL SYS P50 CARD (WARNING SYSTEM ONLY)
FIGURE 2 (SHEET 1)

BOEING PROPRIETARY - Copyright © - Unpublished Work - See title page for details.

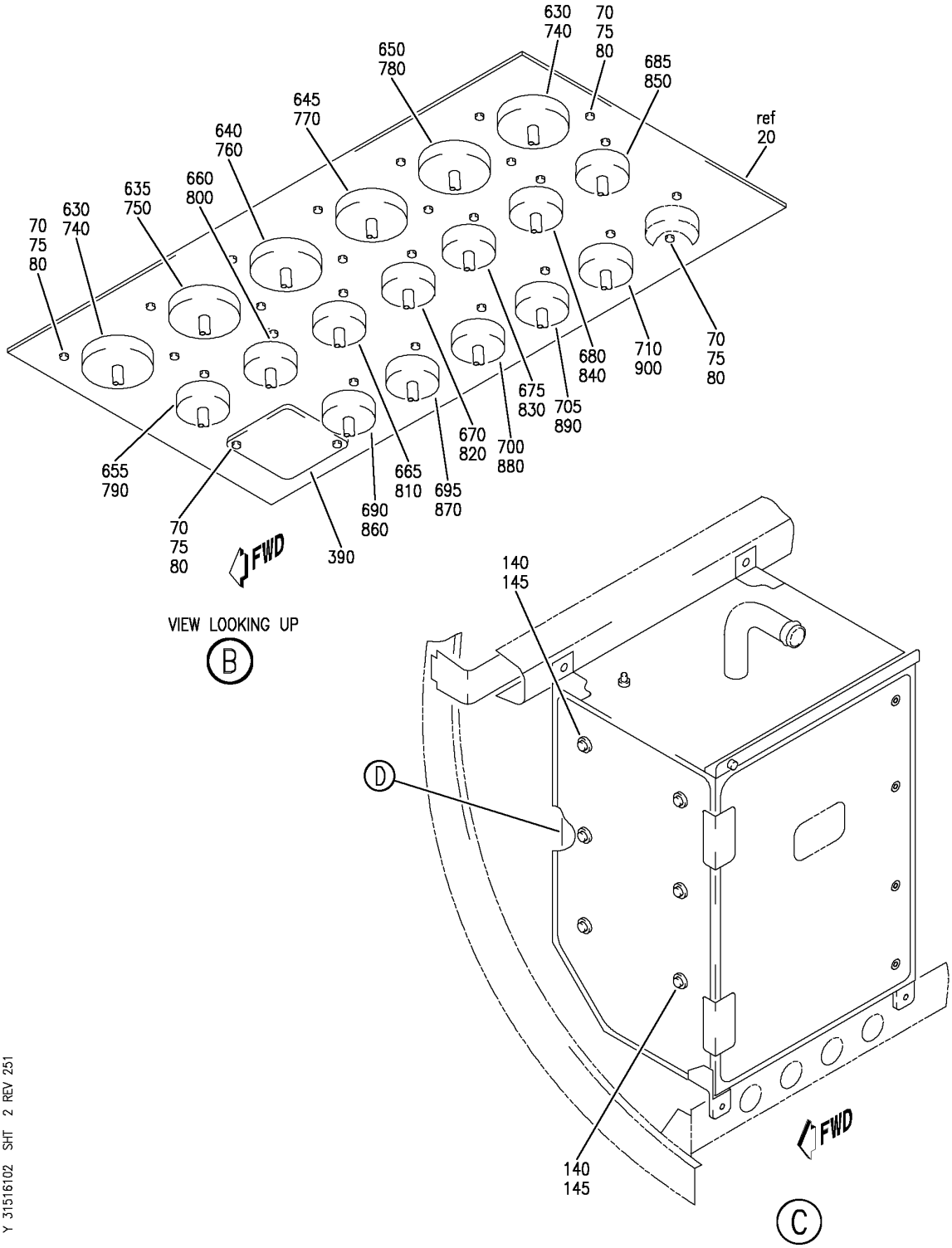

Y 31516102 SHT 2 REV 251

FILE INSTL-ELECTRICAL SYS P50 CARD (WARNING SYSTEM ONLY)
FIGURE 2 (SHEET 2)

BOEING PROPRIETARY - Copyright © - Unpublished Work - See title page for details.

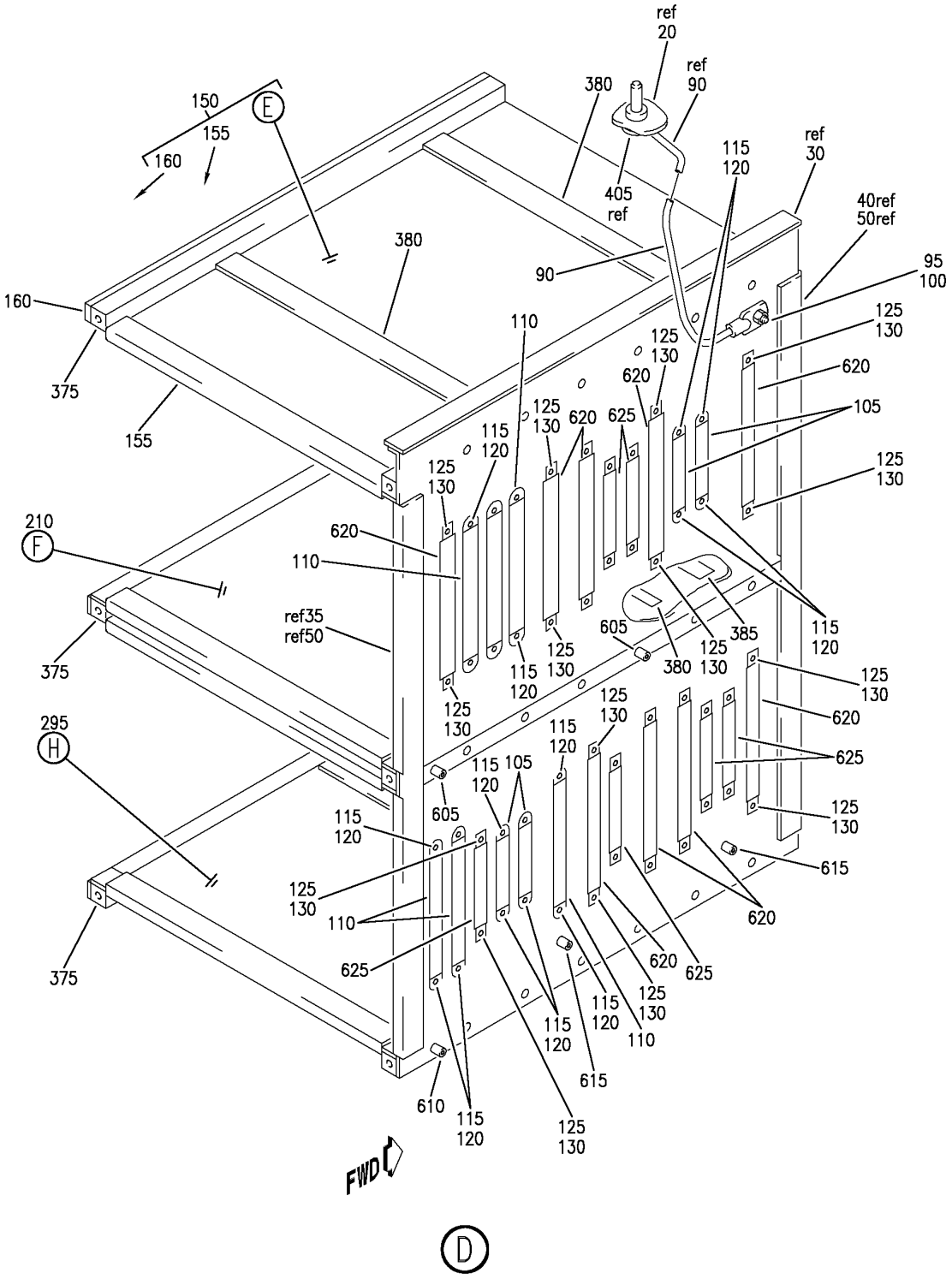

FILE INSTL-ELECTRICAL SYS P50 CARD (WARNING SYSTEM ONLY)
FIGURE 2 (SHEET 3)

BOEING PROPRIETARY - Copyright © - Unpublished Work - See title page for details.

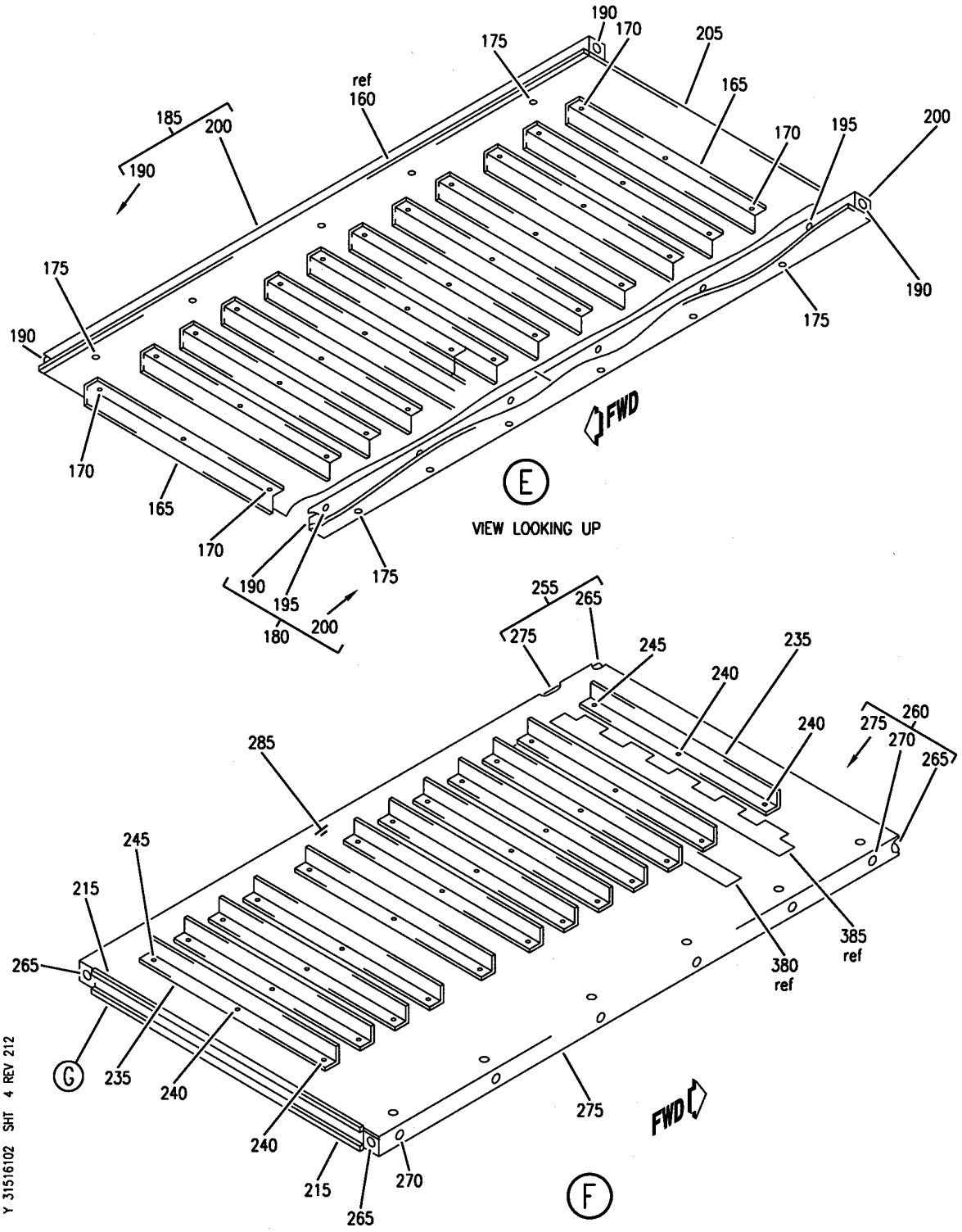

FILE INSTL-ELECTRICAL SYS P50 CARD (WARNING SYSTEM ONLY)
FIGURE 2 (SHEET 4)

BOEING PROPRIETARY - Copyright © - Unpublished Work - See title page for details.

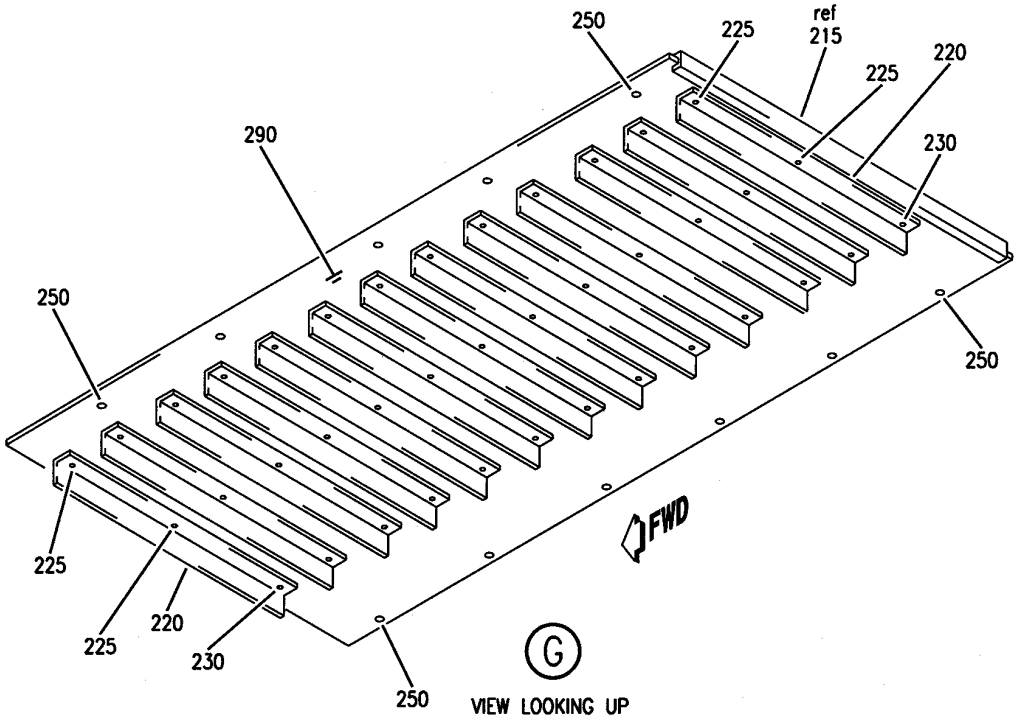

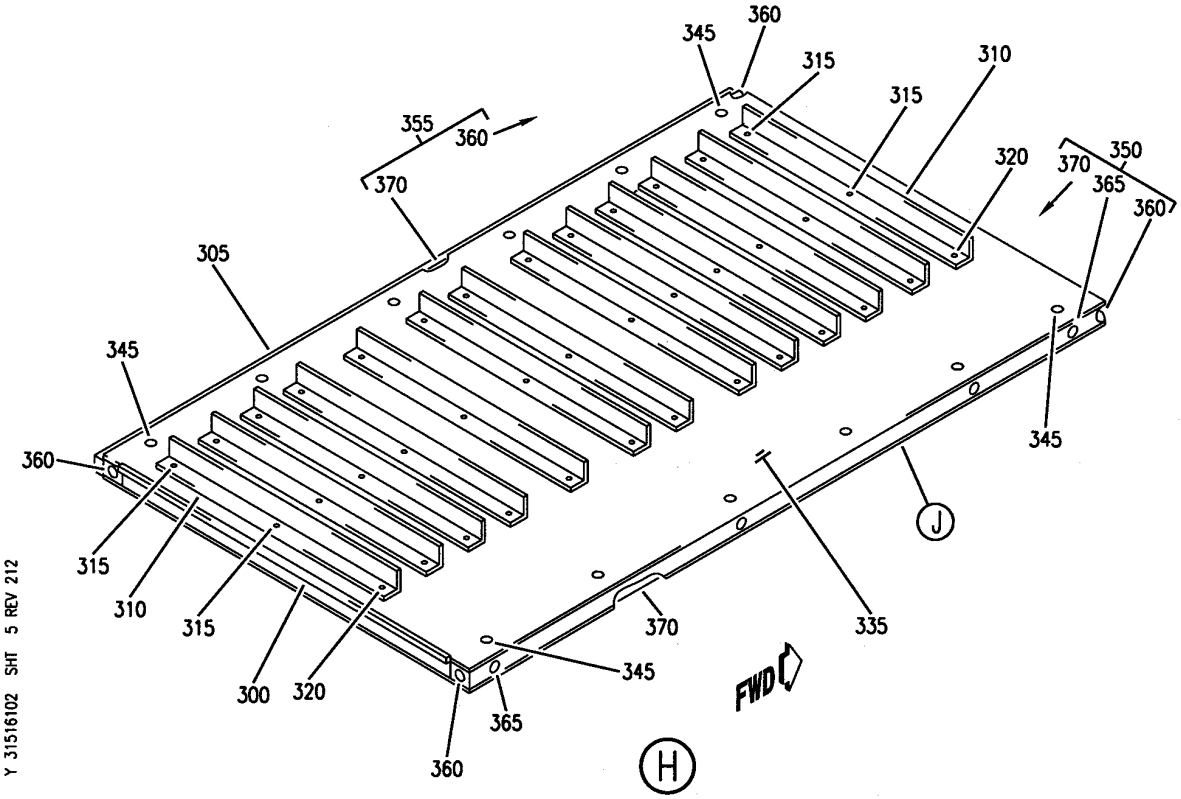

FILE INSTL-ELECTRICAL SYS P50 CARD (WARNING SYSTEM ONLY)
FIGURE 2 (SHEET 5)

BOEING PROPRIETARY - Copyright © - Unpublished Work - See title page for details.

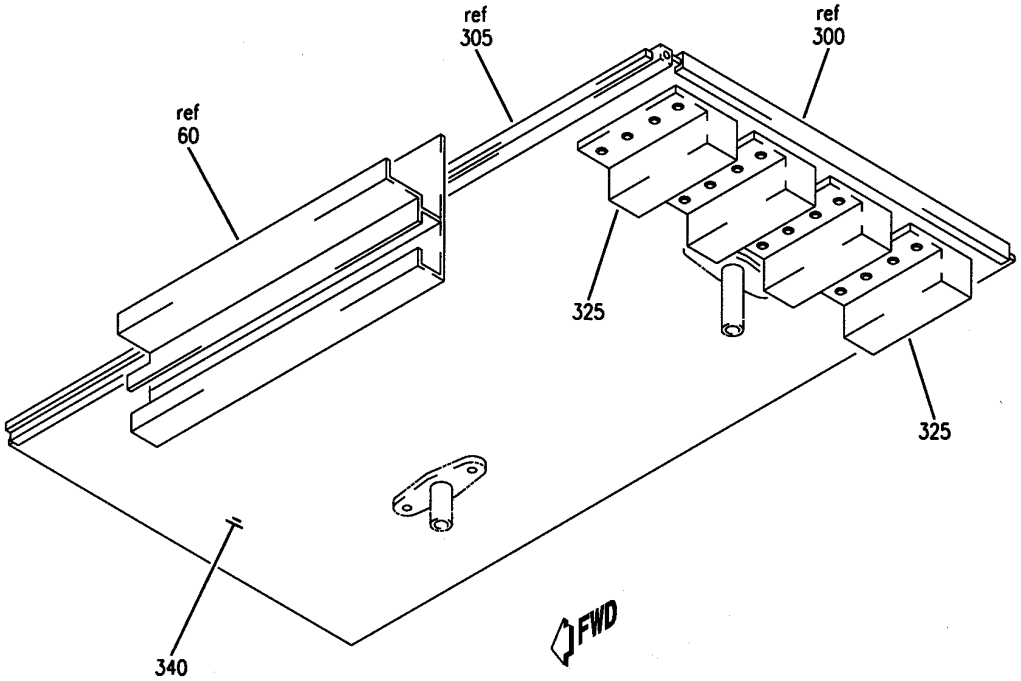

J

VIEW LOOKING UP

Y 31516102 SHT 6 REV 212

FILE INSTL-ELECTRICAL SYS P50 CARD (WARNING SYSTEM ONLY)
FIGURE 2 (SHEET 6)

BOEING PROPRIETARY - Copyright © - Unpublished Work - See title page for details.

FIG ITEM	PART NUMBER	1 2 3 4 5 6 7 NOMENCLATURE	EFFECT FROM TO	UNITS PER ASSY
2				
		FILE INSTL-ELECTRICAL SYS P50 CARD (WARNING SYSTEM ONLY)	102102 108120 504903	
- 1	285N0032-32	FILE INSTL-ELECTRICAL SYS P50 CARD (WARNING SYSTEM ONLY) FOR NHA/OTHER SYS DET SEE: 24-00-58-05	102102 108120 504903	RF
5	BAC27NEX2412	.DECAL	102102 108120 504903	1
20	13471000-2	.ENCLOSURE ASSY- SUPPLIER CODE: V23296 ATTACHING PARTS	102102 108120 504903	1
- 25	NAS1801-06-5	.SCREW	102102 108120 504903	16
		-------*-------		
30	285N0052-2	.SEAL	102102 108120 504903	1
35	285N0051-5	.SEAL ASSY	102102 108120 504903	1
40	285N0051-8	.SEAL ASSY ATTACHING PARTS	102102 108120 504903	1
- 45	NAS1801-06-8	.SCREW	102102 108120 504903	3
		-------*-------		
50	285N0051-4	..SEAL	102102 108120 504903	1
55	H49-2	.CLAMP SUPPLIER CODE: V34941 SPECIFICATION NUMBER: BACC49A2 OPTIONAL PART: MF104-2 V6E102	102102 108120 504903	2
60	285N0050-5	.TERMINAL ASSY-BLK	102102 108120 504903	1

MISSING ITEM NUMBERS NOT APPLICABLE

- ITEM NOT ILLUSTRATED

BOEING PROPRIETARY - Copyright © - Unpublished Work - See title page for details.

FIG ITEM	PART NUMBER	1 2 3 4 5 6 7 NOMENCLATURE	EFFECT FROM TO	UNITS PER ASSY
2				
		ATTACHING PARTS		
- 65	NAS1801-06-10	.SCREW	102102 108120 504903	2
		-------*-------		
70	NAS1801-04-6	.SCREW	102102 108120 504903	40
75	NAS1149FN416P	.WASHER- OPTIONAL PART: NAS1149FN432P	102102 108120 504903	40
75	NAS1149FN432P	.WASHER- OPTIONAL PART: NAS1149FN416P	102102 108120 504903	40
80	BRH10C04D	.NUT SUPPLIER CODE: V52828 SPECIFICATION NUMBER: BACN10JC04CD OPTIONAL PART: H51650-04BAC V15653 102LH9075-40W V72962 NS202486-40 V80539 T6C440JCD V11815 T6C440JCD V11815	102102 108120 504903	40
85	285N0032-33	.GUIDE ASSY-CARD	102102 108120 504903	1
90	740A21-4	..JUMPER ASSY SUPPLIER CODE: V91812 SPECIFICATION NUMBER: BACJ40A21-4 OPTIONAL PART: TJEJ40A21-4 V33483 RBEJ21-4 V1GK47	102102 108120 504903	1

MISSING ITEM NUMBERS NOT APPLICABLE

- ITEM NOT ILLUSTRATED

BOEING PROPRIETARY - Copyright © - Unpublished Work - See title page for details.

FIG ITEM	PART NUMBER	1 2 3 4 5 6 7 NOMENCLATURE	EFFECT FROM TO	UNITS PER ASSY
2				
95	VNS1924CA1-8	..STUD SUPPLIER CODE: V5M902 SPECIFICATION NUMBER: BACS53B1EA1 OPTIONAL PART: VNS1924CA3-1-8 V92215	102102 108120 504903	1
100	MS21042L3	..NUT	102102 108120 504903	1
105	285T0018-10	..COVER-PLATE	102102 108120 504903	4
110	285T0018-11	..COVER-PLATE	102102 108120 504903	6
		ATTACHING PARTS		
115	NAS1801-04-6	..SCREW	102102 108120 504903	20
120	BRH10C04D	..NUT SUPPLIER CODE: V52828 SPECIFICATION NUMBER: BACN10JC04CD OPTIONAL PART: H51650-04BAC V15653 102LH9075-40W V72962 NS202486-40 V80539 T6C440JCD V11815 T6C440JCD V11815	102102 108120 504903	20
125	NAS1801-04-4	..SCREW	102102 108120 504903	30
130	BACW10EC04S	..WASHER	102102 108120 504903	30
		-------*-------		
135	NAS1801-08-19	..SCREW	102102 108120 504903	6

MISSING ITEM NUMBERS NOT APPLICABLE

– ITEM NOT ILLUSTRATED

BOEING PROPRIETARY - Copyright © - Unpublished Work - See title page for details.

FIG ITEM	PART NUMBER	1 2 3 4 5 6 7 NOMENCLATURE	EFFECT FROM TO	UNITS PER ASSY
2				
140	NAS1801-08-16	..SCREW	102102 108120 504903	6
145	BACW10P178AL	..WASHER	102102 108120 504903	12
150	285N0049-12	..PLATE ASSY	102102 108120 504903	1
155	285N0049-9	...SEAL	102102 108120 504903	1
160	285N0049-10	...SEAL	102102 108120 504903	1
165	24BX2-12-3L	...GUIDE- SUPPLIER CODE: V18915 ATTACHING PARTS	102102 108120 504903	12
170	BACR15BB2AD	...RIVET- SIZE DETERMINED ON INSTL. -------*-------	102102 108120 504903	36
175	BACR15BA5DC	...RIVET- SIZE DETERMINED ON INSTL. OPTIONAL PART: BACR15BA4BC	102102 108120 504903	11
175	BACR15BA4BC	...RIVET- SIZE DETERMINED ON INSTL. OPTIONAL PART: BACR15BA5DC	102102 108120 504903	11
180	285N0050-8	...BAR ASSY	102102 108120 504903	1
185	285N0050-7	...BAR ASSY	102102 108120 504903	1
190	MS21209C0825	....INSERT	102102 108120 504903	2
195	MS21209C0615	....INSERT- USED ON: 285N0050-8	102102 108120 504903	6
200	285N0050-3	....BAR	102102 108120 504903	1
205	285N0049-8	...PLATE	102102 108120 504903	1

MISSING ITEM NUMBERS NOT APPLICABLE

– ITEM NOT ILLUSTRATED

BOEING PROPRIETARY - Copyright © - Unpublished Work - See title page for details.

FIG ITEM	PART NUMBER	1 2 3 4 5 6 7 NOMENCLATURE	EFFECT FROM TO	UNITS PER ASSY
2				
210	285N0049-13	..PLATE ASSY	102102 108120 504903	1
215	285N0049-9	...SEAL	102102 108120 504903	2
220	24BX2-12-3L	...GUIDE- SUPPLIER CODE: V18915 ATTACHING PARTS	102102 108120 504903	13
225	BACR15BB2AD	...RIVET- SIZE DETERMINED ON INSTL.	102102 108120 504903	26
230	BACR15BA2AD	...RIVET- SIZE DETERMINED ON INSTL. -------*-------	102102 108120 504903	13
235	24BX2-12-3R	...GUIDE- SUPPLIER CODE: V18915 ATTACHING PARTS	102102 108120 504903	12
240	BACR15BB2AD	...RIVET- SIZE DETERMINED ON INSTL.	102102 108120 504903	24
245	BACR15BA2AD	...RIVET- SIZE DETERMINED ON INSTL. -------*-------	102102 108120 504903	12
250	BACR15BA5DC	...RIVET- SIZE DETERMINED ON INSTL. OPTIONAL PART: BACR15BA4BC	102102 108120 504903	11
250	BACR15BA4BC	...RIVET- SIZE DETERMINED ON INSTL. OPTIONAL PART: BACR15BA5DC	102102 108120 504903	11
255	285N0050-7	...BAR ASSY	102102 108120 504903	1
260	285N0050-8	...BAR ASSY	102102 108120 504903	1
265	MS21209C0825	....INSERT	102102 108120 504903	2
270	MS21209C0615	....INSERT- USED ON: 285N0050-8	102102 108120 504903	6

MISSING ITEM NUMBERS NOT APPLICABLE

– ITEM NOT ILLUSTRATED

BOEING PROPRIETARY - Copyright © - Unpublished Work - See title page for details.

FIG ITEM	PART NUMBER	1 2 3 4 5 6 7 NOMENCLATURE	EFFECT FROM TO	UNITS PER ASSY
2				
275	285N0050-3	....BAR	102102 108120 504903	1
285	285N0049-7	...PLATE	102102 108120 504903	1
290	285N0049-5	...PLATE	102102 108120 504903	1
295	285N0049-11	..PLATE ASSY	102102 108120 504903	1
300	285N0049-9	...SEAL	102102 108120 504903	1
305	285N0049-10	...SEAL	102102 108120 504903	1
310	24BX2-12-3R	...GUIDE-CARD SUPPLIER CODE: V18915 ATTACHING PARTS	102102 108120 504903	13
315	BACR15BB2AD	...RIVET- SIZE DETERMINED ON INSTL.	102102 108120 504903	26
320	BACR15BA2AD	...RIVET- SIZE DETERMINED ON INSTL. -------*-------	102102 108120 504903	13
325	YHLZG16-1	...BLOCK-GND SUPPLIER CODE: V09922 ATTACHING PARTS	102102 108120 504903	4
- 330	BACR15BA5DC	...RIVET- SIZE DETERMINED ON INSTL. OPTIONAL PART: BACR15BA4BC	102102 108120 504903	16
- 330	BACR15BA4BC	...RIVET- SIZE DETERMINED ON INSTL. OPTIONAL PART: BACR15BA5DC -------*-------	102102 108120 504903	16
335	285N0049-2	...PLATE	102102 108120 504903	1
340	285N0049-3	...PLATE	102102 108120 504903	1

MISSING ITEM NUMBERS NOT APPLICABLE

- ITEM NOT ILLUSTRATED

BOEING PROPRIETARY - Copyright © - Unpublished Work - See title page for details.

FIG ITEM	PART NUMBER	1 2 3 4 5 6 7 NOMENCLATURE	EFFECT FROM TO	UNITS PER ASSY
2				
345	BACR15BA5DC	...RIVET-	102102	12
		SIZE DETERMINED ON INSTL.	108120	
		OPTIONAL PART:	504903	
		BACR15BA4BC		
345	BACR15BA4BC	...RIVET-	102102	12
		SIZE DETERMINED ON INSTL.	108120	
		OPTIONAL PART:	504903	
		BACR15BA5DC		
350	285N0050-9	...BAR ASSY	102102	1
			108120	
			504903	
355	285N0050-7	...BAR ASSY	102102	1
			108120	
			504903	
360	MS21209C0825	....INSERT	102102	2
			108120	
			504903	
365	MS21209C0615	....INSERT-	102102	4
		USED ON:	108120	
		285N0050-9	504903	
370	285N0050-3	....BAR	102102	1
			108120	
			504903	
375	285N0052-1	..SEAL	102102	3
			108120	
			504903	
380	285N0052-3	..SEAL	102102	3
			108120	
			504903	
385	285N0052-4	..SEAL	102102	1
			108120	
			504903	
390	285N0034-7	.PLATE-COVER	102102	1
		SUPPLIER CODE:	108120	
		V89954	504903	
395	108-0740-001	.JACK-BANANA	102102	1
		SUPPLIER CODE:	108120	
		V74970	504903	
400	NAS43DD4-6FC	.SPACER	102102	1
			108120	
			504903	
405	NAS1149D0463J	.WASHER	102102	1
			108120	
			504903	
- 600	286N1140-306	WIRE BUNDLE ASSY	102102	RF
- 600	286N1140-314	WIRE BUNDLE ASSY	504903	RF
- 601	286N1140-324	WIRE BUNDLE ASSY-	108120	RF

MISSING ITEM NUMBERS NOT APPLICABLE

- ITEM NOT ILLUSTRATED

BOEING PROPRIETARY - Copyright © - Unpublished Work - See title page for details.

FIG ITEM	PART NUMBER	1 2 3 4 5 6 7 NOMENCLATURE	EFFECT FROM TO	UNITS PER ASSY
2				
605	NAS42DD5-32	.SPACER	102102 108120 504903	2
610	NAS42DD6-16	.SPACER	102102 108120 504903	1
615	NAS42DD6-8	.SPACER	102102 108120 504903	2
620	300052-001	.CONNECTOR- SUPPLIER CODE: V0D9V3 SPECIFICATION NUMBER: BACC65L66 OPTIONAL PART: 200620-01 V16512 300052-001 V03877 192-366-0010 V26742 S1009-00833 V03877 ELECTRICAL EQUIP NUMBER: D00821 D00823 D00909 D02824 D02838 D02996 D02998 D03058 D04258 WIRING DIAGRAM REF: 223213 261811 274821 771241 771242	102102 108120 504903	9

MISSING ITEM NUMBERS NOT APPLICABLE

– ITEM NOT ILLUSTRATED

BOEING PROPRIETARY - Copyright © - Unpublished Work - See title page for details.

FIG ITEM	PART NUMBER	1 2 3 4 5 6 7 NOMENCLATURE	EFFECT FROM TO	UNITS PER ASSY
2				
625	300055-001	.CONNECTOR-	102102	6
		SUPPLIER CODE:	108120	
		V0D9V3	504903	
		SPECIFICATION NUMBER:		
		BACC65L41		
		OPTIONAL PART:		
		300055-001		
		V03877		
		192-341-0005		
		V26742		
		S1022-00833		
		V03877		
		ELECTRICAL EQUIP NUMBER:		
		D02514		
		D02982		
		D02988		
		D03044		
		D03046		
		D04688		
		WIRING DIAGRAM REF:		
		215111		
		215113		
		215121		
		215123		
		272321		
		282121		
630	BACC45FN22-55S	.CONNECTOR-	102102	2
		ELECTRICAL EQUIP NUMBER:	108120	
		D40974J	504903	
		D41990J		
		WIRING DIAGRAM REF:		
		215111		
		783421		
635	BACC45FN22-55S6	.RECEPTACLE-	102102	1
		ELECTRICAL EQUIP NUMBER:	108120	
		D41477J	504903	
		WIRING DIAGRAM REF:		
		221211		
640	BACC45FN22-55P7	.CONNECTOR-	102102	1
		ELECTRICAL EQUIP NUMBER:	108120	
		D40972J	504903	
		WIRING DIAGRAM REF:		
		215114		
645	BACC45FN22-55S8	.CONNECTOR-	102102	1
		ELECTRICAL EQUIP NUMBER:	108120	
		D40976J	504903	
		WIRING DIAGRAM REF:		
		215123		

MISSING ITEM NUMBERS NOT APPLICABLE

– ITEM NOT ILLUSTRATED

BOEING PROPRIETARY - Copyright © - Unpublished Work - See title page for details.

FIG ITEM	PART NUMBER	1 2 3 4 5 6 7 NOMENCLATURE	EFFECT FROM TO	UNITS PER ASSY
2				
650	BACC45FN22-55S9	.RECEPTACLE- ELECTRICAL EQUIP NUMBER: D40970J WIRING DIAGRAM REF: 215113	102102 108120 504903	1
655	BACC45FN14-15S7	.CONNECTOR- ELECTRICAL EQUIP NUMBER: D41835J WIRING DIAGRAM REF: 274821	102102 108120 504903	1
660	BACC45FN16-24S8	.RECEPTACLE- ELECTRICAL EQUIP NUMBER: D42004J WIRING DIAGRAM REF: 771241	102102 108120 504903	1
665	BACC45FN16-24P9	.CONNECTOR- ELECTRICAL EQUIP NUMBER: D42000J WIRING DIAGRAM REF: 801111	102102 108120 504903	1
670	BACC45FN14-15S	.CONNECTOR- ELECTRICAL EQUIP NUMBER: D41839J WIRING DIAGRAM REF: 274821	102102 108120 504903	1
680	BACC45FN16-24S7	.CONNECTOR- ELECTRICAL EQUIP NUMBER: D41489J WIRING DIAGRAM REF: 215112	102102 108120 504903	1
685	BACC45FN14-15S8	.RECEPTACLE- ELECTRICAL EQUIP NUMBER: D41837J WIRING DIAGRAM REF: 274821	102102 108120 504903	1
690	BACC45FN14-15P	.CONNECTOR- ELECTRICAL EQUIP NUMBER: D40810J WIRING DIAGRAM REF: 272321	102102 108120 504903	1
695	BACC45FN14-15S6	.RECEPTACLE- ELECTRICAL EQUIP NUMBER: D41675J WIRING DIAGRAM REF: 221231	102102 108120 504903	1

MISSING ITEM NUMBERS NOT APPLICABLE

– ITEM NOT ILLUSTRATED

BOEING PROPRIETARY - Copyright © - Unpublished Work - See title page for details.

FIG ITEM	PART NUMBER	1 2 3 4 5 6 7 NOMENCLATURE	EFFECT FROM TO	UNITS PER ASSY
2				
700	BACC45FN16-24P7	.CONNECTOR- ELECTRICAL EQUIP NUMBER: D41380J WIRING DIAGRAM REF: 261811	102102 108120 504903	1
705	BACC45FN16-24P8	.CONNECTOR- ELECTRICAL EQUIP NUMBER: D42002J WIRING DIAGRAM REF: 801121	102102 108120 504903	1
710	BACC45FN14-15P9	.CONNECTOR- ELECTRICAL EQUIP NUMBER: D40812J WIRING DIAGRAM REF: 282121	102102 108120 504903	1
- 715	YHLZD33	.TERMINAL- SUPPLIER CODE: V09922 ELECTRICAL EQUIP NUMBER: TB0147A WIRING DIAGRAM REF: 215115	102102 108120 504903	4
- 720	YHLZ16-4	.MODULE- SUPPLIER CODE: V09922 SPECIFICATION NUMBER: BACM15C3B OPTIONAL PART: 421120-452 V58982 TBH120452 V58982 ELECTRICAL EQUIP NUMBER: TB0147Y WIRING DIAGRAM REF: 291112	102102 108120 504903	6

MISSING ITEM NUMBERS NOT APPLICABLE

- ITEM NOT ILLUSTRATED

BOEING PROPRIETARY - Copyright © - Unpublished Work - See title page for details.

FIG ITEM	PART NUMBER	1 2 3 4 5 6 7 NOMENCLATURE	EFFECT FROM TO	UNITS PER ASSY
2				
- 725	YHLZ16-8	.MODULE-	102102	2
		SUPPLIER CODE:	108120	
		V09922	504903	
		SPECIFICATION NUMBER:		
		BACM15C3C		
		OPTIONAL PART:		
		421120-454		
		V58982		
		TBH120454		
		V58982		
		ELECTRICAL EQUIP NUMBER:		
		TB0147Z		
		WIRING DIAGRAM REF:		
		361111		
- 730	286N4006-322	WIRE BUNDLE ASSY	102102	RF
- 731	286N4006-344	WIRE BUNDLE ASSY	504903	RF
- 735	286N4236-326	WIRE BUNDLE ASSY	102102	RF
- 735	286N4236-340	WIRE BUNDLE ASSY	504903	RF
- 735	286N4236-346	WIRE BUNDLE ASSY	108120	RF
740	BACC45FT22-55P	.PLUG-	102102	2
		ELECTRICAL EQUIP NUMBER:	108120	
		D40974P	504903	
		D41990P		
		WIRING DIAGRAM REF:		
		215111		
		801121		
- 745	286N4471-348	WIRE BUNDLE ASSY-	102102	RF
		REWORKED BY ALERT SB:		
		34A0222		
- 745	286N4471-350	WIRE BUNDLE ASSY-	504504	RF
		REWORKED BY ALERT SB:	506903	
		34A0222		
- 746	286N4471-374	WIRE BUNDLE ASSY-	505505	RF
		REWORKED BY ALERT SB:		
		34A0222		
- 747	286N4471-426	WIRE BUNDLE ASSY-	108120	RF
		REWORKED BY ALERT SB:		
		34A0222		
750	BACC45FT22A55P6	.PLUG-	102102	1
		ELECTRICAL EQUIP NUMBER:	108120	
		D41477P	504903	
		WIRING DIAGRAM REF:		
		346113		
- 755	286N2066-010	WIRE BUNDLE ASSY	504903	RF
- 755	286N2066-334	WIRE BUNDLE ASSY	102102	RF
- 756	286N2066-346	WIRE BUNDLE ASSY	108120	RF

MISSING ITEM NUMBERS NOT APPLICABLE

- ITEM NOT ILLUSTRATED

BOEING PROPRIETARY - Copyright © - Unpublished Work - See title page for details.

FIG ITEM	PART NUMBER	1 2 3 4 5 6 7 NOMENCLATURE	EFFECT FROM TO	UNITS PER ASSY
2				
760	BACC45FT22-55S7	.RECEPTACLE-	102102	1
		ELECTRICAL EQUIP NUMBER:	108120	
		D40972P	504903	
		WIRING DIAGRAM REF:		
		215114		
- 765	286N4106-301	WIRE BUNDLE ASSY	102102	RF
- 766	286N4106-340	WIRE BUNDLE ASSY	504903	RF
- 766	286N4106-351	WIRE BUNDLE ASSY	108120	RF
770	BACC45FT22-55P8	.CONNECTOR-	102102	1
		ELECTRICAL EQUIP NUMBER:	108120	
		D40976P	504903	
		WIRING DIAGRAM REF:		
		215121		
- 775	286N2070-335	WIRE BUNDLE ASSY	102102	RF
- 775	286N2070-337	WIRE BUNDLE ASSY	108120	RF
- 775	286N2070-340	WIRE BUNDLE ASSY	504903	RF
780	BACC45FT22-55S9	.PLUG-	102102	1
		ELECTRICAL EQUIP NUMBER:	108120	
		D40970P	504903	
		WIRING DIAGRAM REF:		
		215113		
- 785	286N2605-301	WIRE BUNDLE ASSY	108120	RF
- 785	286N2605-302	WIRE BUNDLE ASSY	102102	RF
- 785	286N2605-306	WIRE BUNDLE ASSY	504903	RF
790	BACC45FT14A15P7	.PLUG-	102102	1
		ELECTRICAL EQUIP NUMBER:	108120	
		D41835P	504903	
		WIRING DIAGRAM REF:		
		274821		
- 795	286N4228-329	WIRE BUNDLE ASSY	102102	RF
- 795	286N4228-340	WIRE BUNDLE ASSY	504903	RF
- 796	286N4228-355	WIRE BUNDLE ASSY	108120	RF
800	BACC45FT16-24P8	.PLUG-	102102	1
		ELECTRICAL EQUIP NUMBER:	108120	
		D42004P	504903	
		WIRING DIAGRAM REF:		
		801111		
- 805	286N4210-306	WIRE BUNDLE ASSY	102102	RF
- 805	286N4210-321	WIRE BUNDLE ASSY	504903	RF
- 805	286N4210-335	WIRE BUNDLE ASSY	108120	RF
810	BACC45FT16-24S9	.PLUG-	102102	1
		ELECTRICAL EQUIP NUMBER:	108120	
		D42000P	504903	
		WIRING DIAGRAM REF:		
		261811		
- 815	286N2621-303	WIRE BUNDLE ASSY	102102	RF
- 815	286N2621-306	WIRE BUNDLE ASSY	504903	RF

MISSING ITEM NUMBERS NOT APPLICABLE

- ITEM NOT ILLUSTRATED

BOEING PROPRIETARY - Copyright © - Unpublished Work - See title page for details.

FIG ITEM	PART NUMBER	1 2 3 4 5 6 7 NOMENCLATURE	EFFECT FROM TO	UNITS PER ASSY
2				
820	BACC45FT14A15P	.PLUG-	102102	1
		ELECTRICAL EQUIP NUMBER:	108120	
		D41839P	504903	
		WIRING DIAGRAM REF:		
		274821		
- 835	286N4473-320	WIRE BUNDLE ASSY-	108120	RF
		REWORKED BY ALERT SB:		
		34A0222		
- 835	286N4473-365	WIRE BUNDLE ASSY-	102102	RF
		REWORKED BY ALERT SB:		
		34A0222		
- 835	286N4473-368	WIRE BUNDLE ASSY-	504504	RF
		REWORKED BY ALERT SB:	506903	
		34A0222		
- 836	286N4473-390	WIRE BUNDLE ASSY-	505505	RF
		REWORKED BY ALERT SB:		
		34A0222		
840	BACC45FT16A24P7	.PLUG-	102102	1
		ELECTRICAL EQUIP NUMBER:	108120	
		D41489P	504903	
		WIRING DIAGRAM REF:		
		222322		
- 845	286N2611-301	WIRE BUNDLE ASSY	108120	RF
- 845	286N2611-302	WIRE BUNDLE ASSY	102102	RF
- 845	286N2611-307	WIRE BUNDLE ASSY	504903	RF
850	BACC45FT14A15P8	.CONNECTOR-	102102	1
		ELECTRICAL EQUIP NUMBER:	108120	
		D41837P	504903	
		WIRING DIAGRAM REF:		
		274821		
- 855	286N2352-323	WIRE BUNDLE ASSY	102102	RF
- 855	286N2352-328	WIRE BUNDLE ASSY	504903	RF
- 856	286N2352-348	WIRE BUNDLE ASSY	108120	RF
860	BACC45FT14-15S	.CONNECTOR-	102102	1
		ELECTRICAL EQUIP NUMBER:	108120	
		D40810P	504903	
		WIRING DIAGRAM REF:		
		274821		
- 865	286N4475-341	WIRE BUNDLE ASSY	102102	RF
- 865	286N4475-344	WIRE BUNDLE ASSY	504903	RF
- 865	286N4475-355	WIRE BUNDLE ASSY	108120	RF
870	BACC45FT14A15P6	.CONNECTOR-	102102	1
		ELECTRICAL EQUIP NUMBER:	108120	
		D41675P	504903	
		WIRING DIAGRAM REF:		
		221231		
- 875	286N2078-328	WIRE BUNDLE ASSY	504903	RF
- 875	286N2078-330	WIRE BUNDLE ASSY	102102	RF
- 875	286N2078-331	WIRE BUNDLE ASSY	108120	RF

MISSING ITEM NUMBERS NOT APPLICABLE

- ITEM NOT ILLUSTRATED

BOEING PROPRIETARY - Copyright © - Unpublished Work - See title page for details.

FIG ITEM	PART NUMBER	1 2 3 4 5 6 7 NOMENCLATURE	EFFECT FROM TO	UNITS PER ASSY
2				
880	BACC45FT16-24S7	.PLUG-	102102	1
		ELECTRICAL EQUIP NUMBER:	108120	
		D41380P	504903	
		WIRING DIAGRAM REF:		
		261511		
- 885	286N4220-305	WIRE BUNDLE ASSY	102102	RF
- 885	286N4220-312	WIRE BUNDLE ASSY	504903	RF
- 885	286N4220-320	WIRE BUNDLE ASSY	108120	RF
890	BACC45FT16-24S8	.CONNECTOR-	102102	1
		ELECTRICAL EQUIP NUMBER:	108120	
		D42002P	504903	
		WIRING DIAGRAM REF:		
		261821		
- 895	286N2356-327	WIRE BUNDLE ASSY	504903	RF
- 895	286N2356-328	WIRE BUNDLE ASSY	102102	RF
- 896	286N2356-340	WIRE BUNDLE ASSY	108120	RF
900	BACC45FT14-15S9	.CONNECTOR-	102102	1
		ELECTRICAL EQUIP NUMBER:	108120	
		D40812P	504903	
		WIRING DIAGRAM REF:		
		215121		

MISSING ITEM NUMBERS NOT APPLICABLE

- ITEM NOT ILLUSTRATED

BOEING PROPRIETARY - Copyright © - Unpublished Work - See title page for details.