LANDING GEAR/WHEEL WELLS

BOEING PROPRIETARY - Copyright © - Unpublished Work - See title page for details.

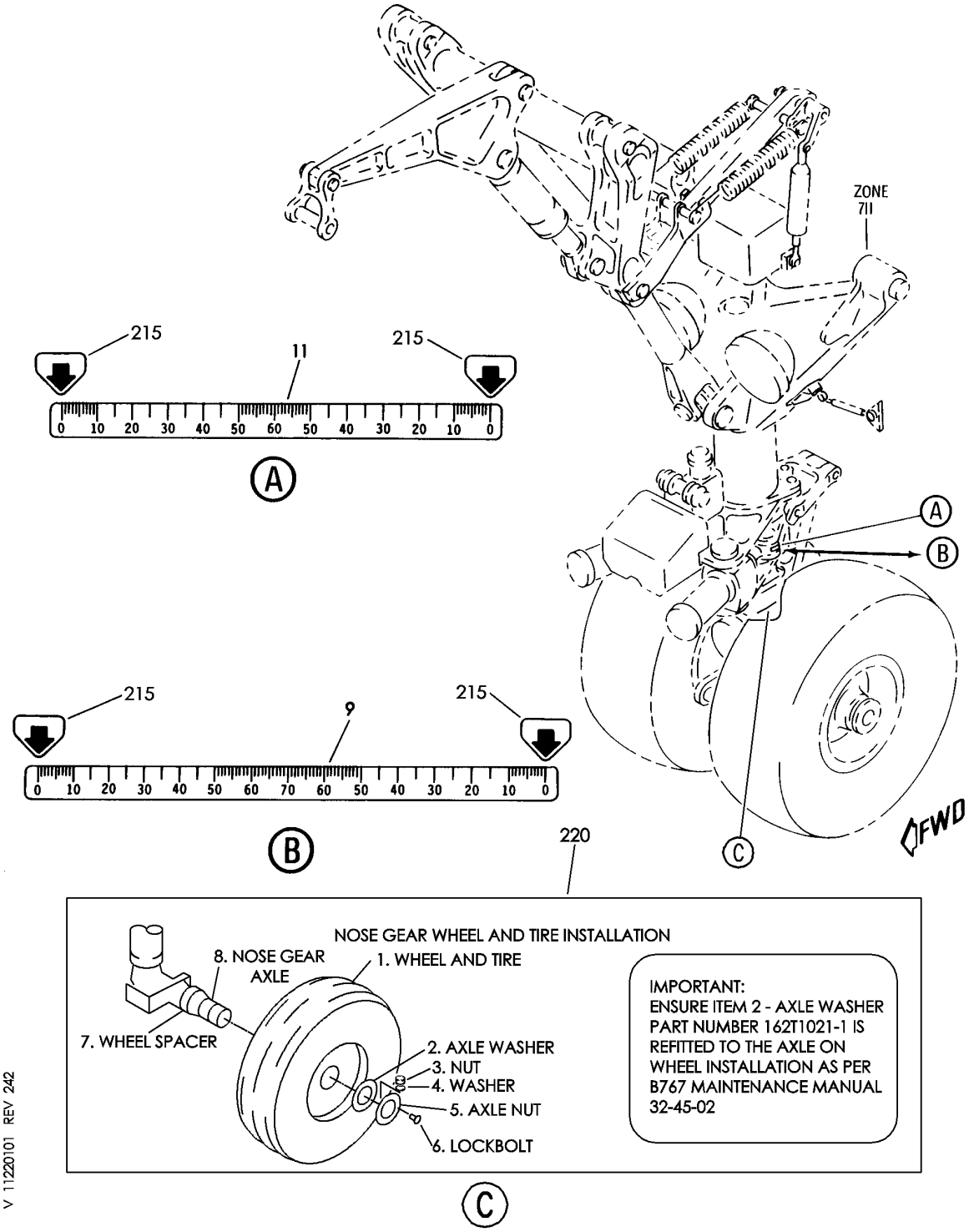

GEAR ASSY-NLG (PLACARDS AND MARKINGS ONLY)
FIGURE 1

BOEING PROPRIETARY - Copyright © - Unpublished Work - See title page for details.

FIG ITEM	PART NUMBER	1 2 3 4 5 6 7 NOMENCLATURE	EFFECT FROM TO	UNITS PER ASSY
1		GEAR ASSY-NLG (PLACARDS AND MARKINGS ONLY)		
- 3	162T0000-263	GEAR ASSY-NLG (PLACARDS AND MARKINGS ONLY) MISCELLANEOUS DATA: FOR SPARES PROCURE LOWER COMPONENTS COMPONENT MAINT MANUAL REF: 32-21-21 FOR NHA/OTHER SYS DET SEE: 32-21-01-01	163999	RF
- 4	162T0000-281	GEAR ASSY-NLG (PLACARDS AND MARKINGS ONLY) COMPONENT MAINT MANUAL REF: 32-21-21 FOR NHA/OTHER SYS DET SEE: 32-21-01-01	155162	RF
9	BAC27TLG0011	.MARKER-ALUMINUM FOIL QUALIFIED I/W DATA: BAC27TLG0006 CAN BE REPLACED BY BAC27TLG0011 ONE-WAY FORWARD WIT RELOCATION OF QTY (2) BAC27TLG010 PER DWG 162T0000 FL 33. USED ON: 162T0000-221 162T0000-225 162T0000-226 162T0000-231 162T0000-233 162T0000-234 162T0000-237 162T0000-239 162T0000-242 162T0000-243 162T0000-244 162T0000-245 162T0000-246 162T0000-247 162T0000-248 162T0000-250 162T0000-251 162T0000-255 162T0000-256 162T0000-262		1

ILLUSTRATION ITEMS NOT ON PARTS LIST ARE NOT APPLICABLE

- ITEM NOT ILLUSTRATED

BOEING PROPRIETARY - Copyright © - Unpublished Work - See title page for details.

FIG ITEM	PART NUMBER	1 2 3 4 5 6 7 NOMENCLATURE	EFFECT FROM TO	UNITS PER ASSY
1				
9		162T0000-263		
		162T0000-264		
		162T0000-265		
		162T0000-266		
		162T0000-267		
		162T0000-268		
		162T0000-269		
		162T0000-270		
		162T0000-272		
		162T0000-274		
		162T0000-275		
		162T0000-277		
		162T0000-279		
		162T0000-280		
		162T0000-281		
		162T0000-282		
		162T0000-283		
		162T0000-287		
		162T0000-290		
		162T0000-291		
		162T0000-294		
		162T0000-300		
		162T0000-306		
		162T0000-307		
		162T0000-308		
		162T0000-309		
		162T0000-310		
		162T0000-311		
		162T0000-312		
		162T0000-313		
		162T0000-314		
		162T0000-315		
		162T0000-316		
		162T0000-317		
		162T0000-318		
		162T0000-319		
		162T0000-320		
		162T0000-321		
		162T0000-333		
		162T0000-334		
		162T0000-337		
		162T0000-340		
		162T0000-341		
		162T0000-344		
		162T0000-345		
		162T0000-346		
		162T0000-347		
		162T0000-348		
		162T0000-349		
		ILLUSTRATION ITEMS NOT ON PARTS LIST ARE NOT APPLICABLE		

— ITEM NOT ILLUSTRATED

BOEING PROPRIETARY - Copyright © - Unpublished Work - See title page for details.

FIG ITEM	PART NUMBER	1 2 3 4 5 6 7 NOMENCLATURE	EFFECT FROM TO	UNITS PER ASSY
1				
9		162T0000-350		
		162T0000-351		
		162T0000-352		
		162T0000-354		
		162T0000-355		
		162T0000-357		
		162T0000-358		
		162T0000-369		
		162T0000-376		
		162T0000-377		
		162T0000-378		
		162T0000-379		
		162T0000-604		
		162T0000-607		
- 202	162T0000-068	GEAR INSTL-NLG	163999	RF
		(PLACARDS AND MARKINGS		
		ONLY)		
		FOR NHA/OTHER SYS DET SEE:		
		32-00-00-01		
- 207	162T0000-514	GEAR INSTL-NLG	155162	RF
		(PLACARDS AND MARKINGS		
		ONLY)		
		FOR NHA/OTHER SYS DET SEE:		
		32-00-00-01		
215	BAC27TLG0010	.MARKER-ALUMINUM FOIL		2

ILLUSTRATION ITEMS NOT ON PARTS LIST ARE NOT APPLICABLE

- ITEM NOT ILLUSTRATED

BOEING PROPRIETARY - Copyright © - Unpublished Work - See title page for details.

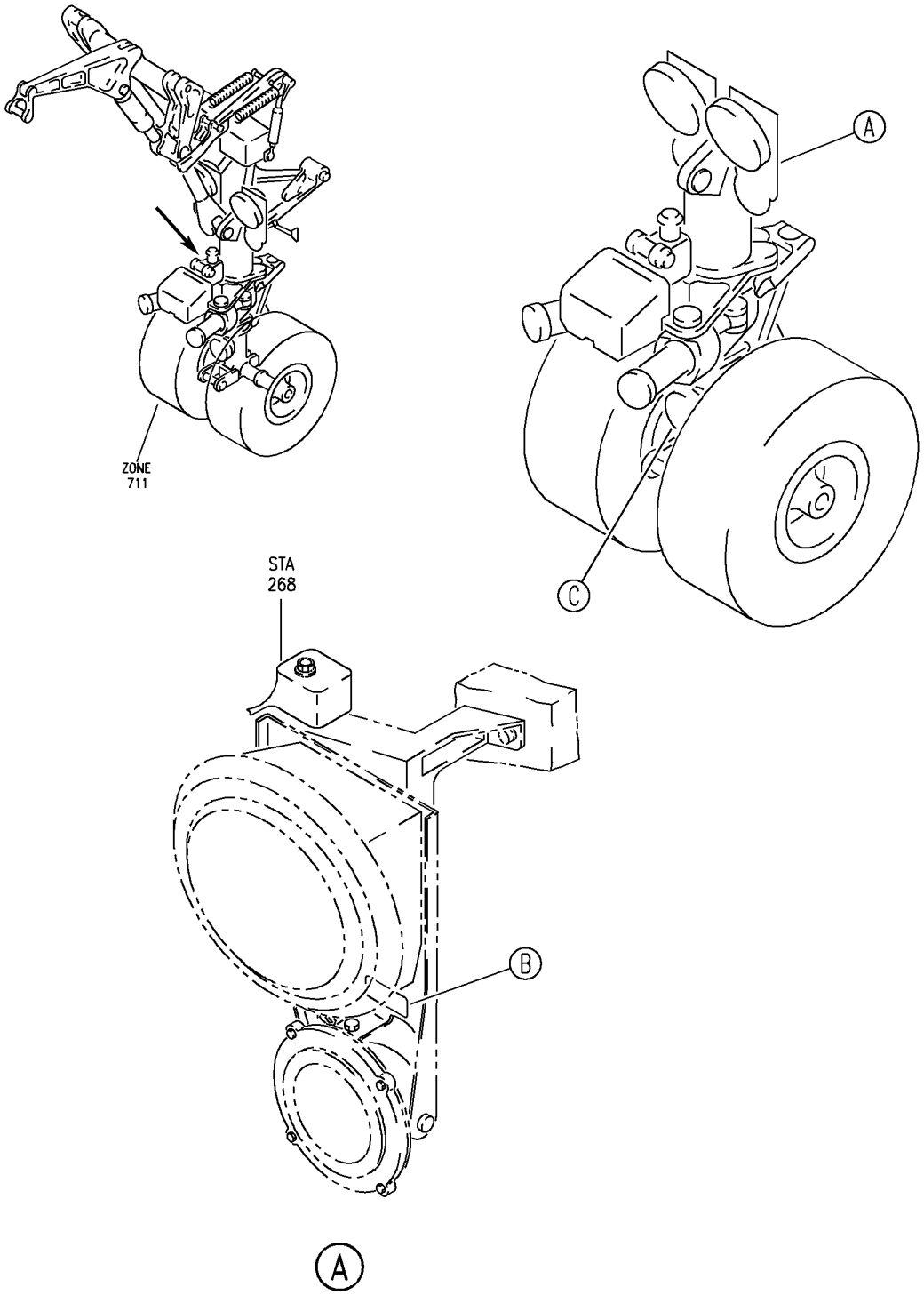

V 11220110 SHT 1 REV 308

LIGHT INSTL-NLG TAXI (PLACARDS AND MARKINGS ONLY)
FIGURE 10 (SHEET 1)

BOEING PROPRIETARY - Copyright © - Unpublished Work - See title page for details.

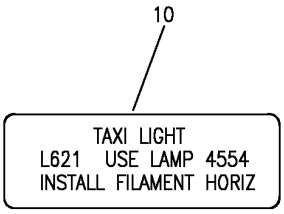

B

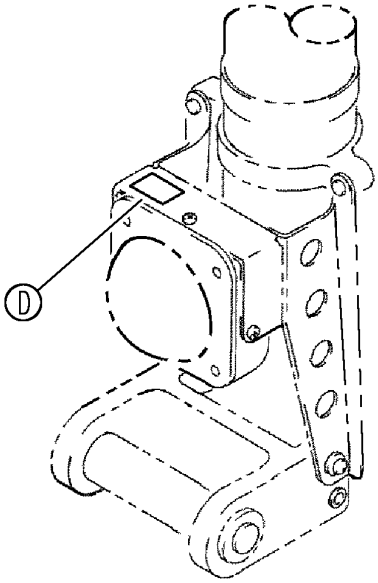

C

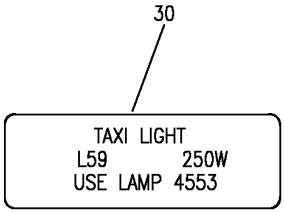

D

V 11220110 SHT 2 REV 308

LIGHT INSTL-NLG TAXI (PLACARDS AND MARKINGS ONLY)
FIGURE 10 (SHEET 2)

BOEING PROPRIETARY - Copyright © - Unpublished Work - See title page for details.

FIG ITEM	PART NUMBER	1 2 3 4 5 6 7 NOMENCLATURE	EFFECT FROM TO	UNITS PER ASSY
10				
		LIGHT INSTL-NLG TAXI (PLACARDS AND MARKINGS ONLY)		
- 1	284T0798-1	LIGHT INSTL-NLG TAXI (PLACARDS AND MARKINGS ONLY) POSITION DATA: LH VARIABLE DRAWING REF: 284T0798-5005 FOR NHA/OTHER SYS DET SEE: 32-20-51-01		RF
- 5	284T0798-2	LIGHT INSTL-NLG TAXI (PLACARDS AND MARKINGS ONLY) POSITION DATA: RH VARIABLE DRAWING REF: 284T0798-5006 FOR NHA/OTHER SYS DET SEE: 32-20-51-01		RF
10	BAC27TEX1976	.MARKER- POSITION DATA: LH SIDE PLACARD CONTENT: TAXI LIGHT L621 USE LAMP 4554 INSTALL FILAMENT HORIZ.		1
- 15	BAC27TEX1977	.MARKER- POSITION DATA: RH SIDE PLACARD CONTENT: TAXI LIGHT L622 USE LAMP 4554 INSTALL FILAMENT HORIZ. ATTACHING PARTS		1
- 20	BACR15BB3A	.RIVET- SIZE DETERMINED ON INSTL. -------*-------		4

ILLUSTRATION ITEMS NOT ON PARTS LIST ARE NOT APPLICABLE

- ITEM NOT ILLUSTRATED

BOEING PROPRIETARY - Copyright © - Unpublished Work - See title page for details.

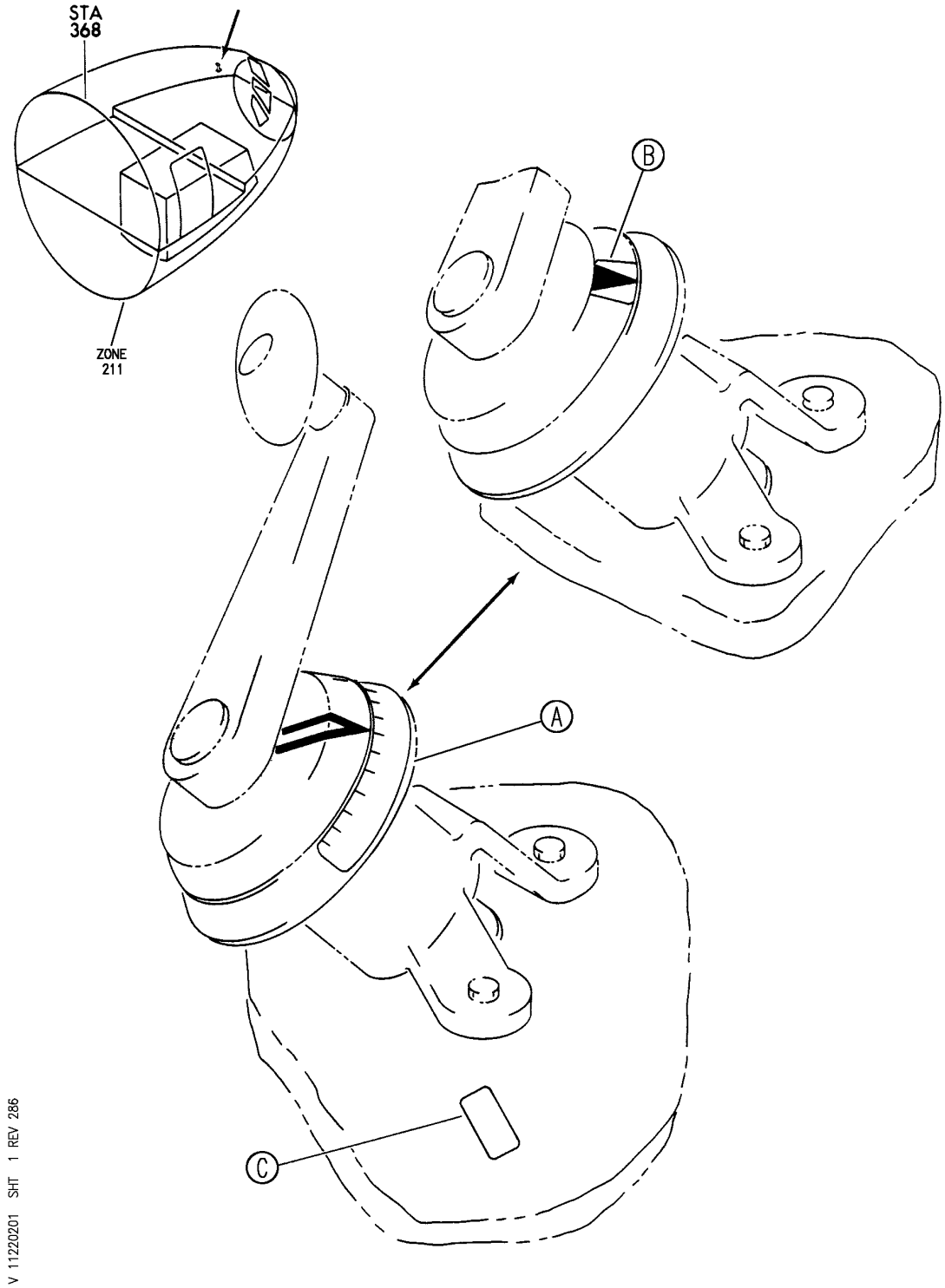

HANDLE INSTL-FWD QUADRANT NOSE WHL STEERING TILLER (PLACARDS AND MARKINGS ONLY)
FIGURE 1 (SHEET 1)

BOEING PROPRIETARY - Copyright © - Unpublished Work - See title page for details.

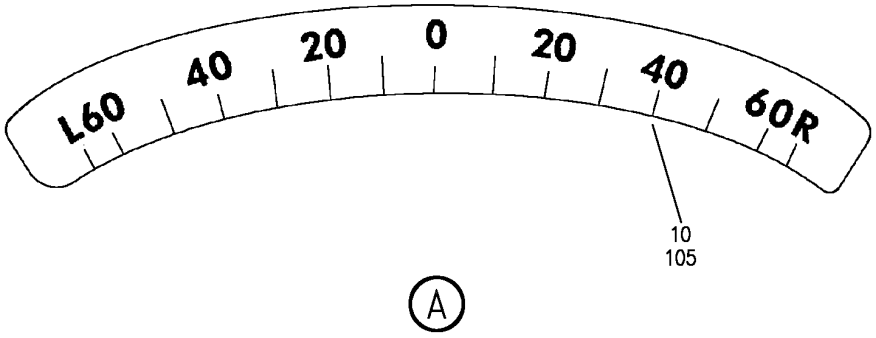

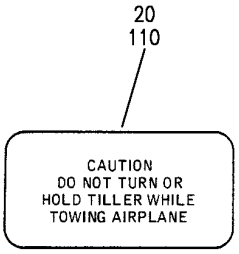

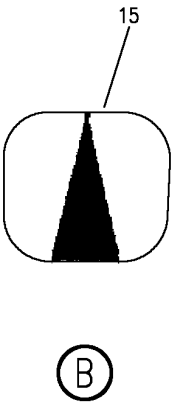

V 11220201 SHT 2 REV 286

HANDLE INSTL-FWD QUADRANT NOSE WHL STEERING TILLER (PLACARDS AND MARKINGS ONLY)
FIGURE 1 (SHEET 2)

BOEING PROPRIETARY - Copyright © - Unpublished Work - See title page for details.

FIG ITEM	PART NUMBER	1 2 3 4 5 6 7 NOMENCLATURE	EFFECT FROM TO	UNITS PER ASSY
1		HANDLE INSTL-FWD QUADRANT NOSE WHL STEERING TILLER (PLACARDS AND MARKINGS ONLY)		
- 1	257T4100-9	HANDLE INSTL-NOSE WHL STEERING TILLER (PLACARDS AND MARKINGS ONLY) POSITION DATA: FWD QUADRANT FOR NHA/OTHER SYS DET SEE: 32-51-60-01		RF
10	BAC27TCT0203	.DECAL-		1
20	BAC27TCT0317	.DECAL		1

ILLUSTRATION ITEMS NOT ON PARTS LIST ARE NOT APPLICABLE

- ITEM NOT ILLUSTRATED

BOEING PROPRIETARY - Copyright © - Unpublished Work - See title page for details.

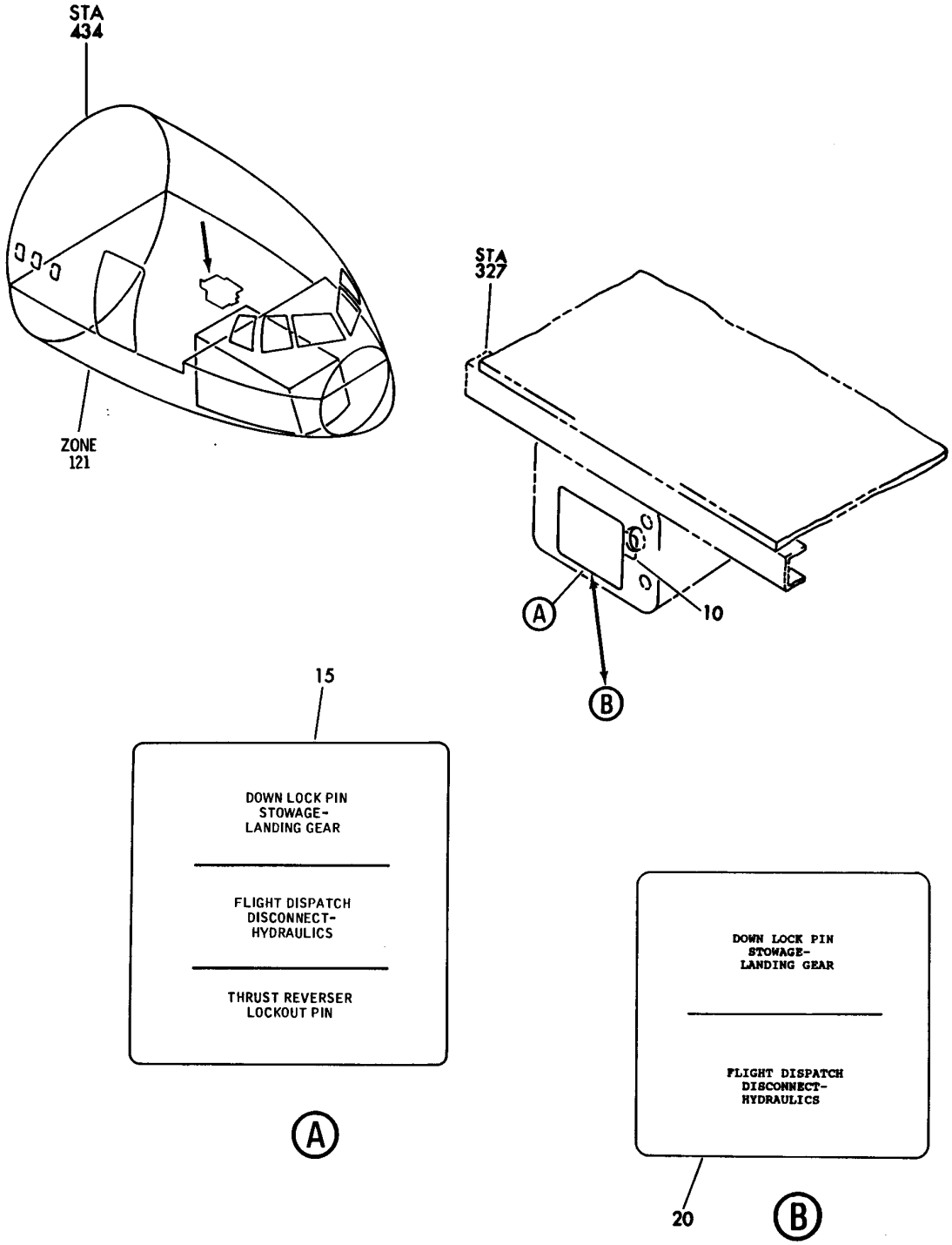

BOX ASSY-LG DOWN LOCK PIN (PLACARDS AND MARKINGS ONLY)
FIGURE 1

BOEING PROPRIETARY - Copyright © - Unpublished Work - See title page for details.

FIG ITEM	PART NUMBER	1 2 3 4 5 6 7 NOMENCLATURE	EFFECT FROM TO	UNITS PER ASSY
1		BOX ASSY-LG DOWN LOCK PIN (PLACARDS AND MARKINGS ONLY)		
- 1	284T0298-6	BOX ASSY-LG DOWN LOCK PIN (PLACARDS AND MARKINGS ONLY) FOR NHA/OTHER SYS DET SEE: 53-11-76-01		RF
10	BAC27TEX3268	.DECAL- PLACARD CONTENT: FLIGHT DISPATCH DISCONNECT-HYDRAULICS		1
15	BAC27TEX3367	.DECAL-		1

ILLUSTRATION ITEMS NOT ON PARTS LIST ARE NOT APPLICABLE

- ITEM NOT ILLUSTRATED

BOEING PROPRIETARY - Copyright © - Unpublished Work - See title page for details.

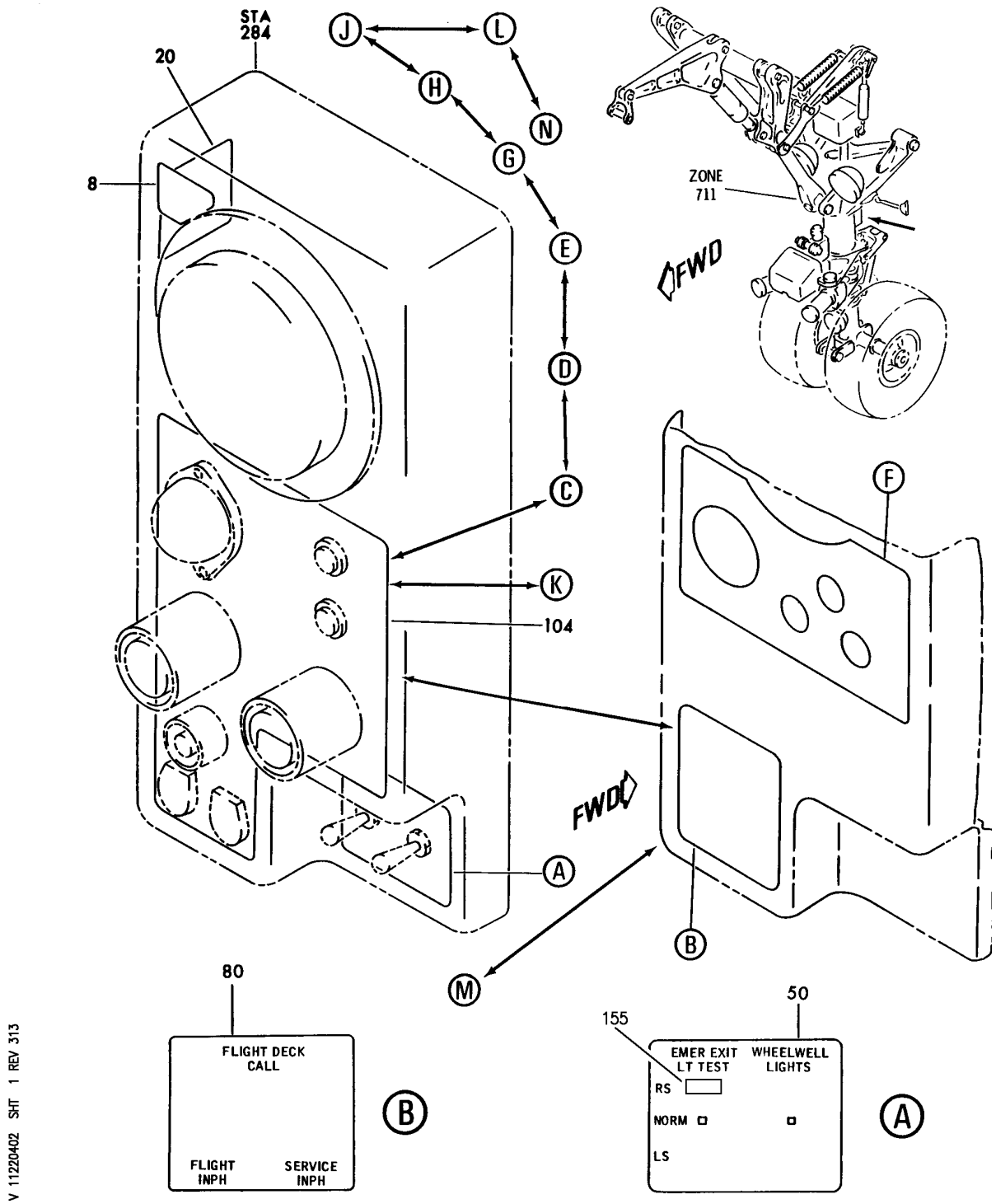

PANEL ASSY-APU SHUTDOWN P40 (PLACARDS AND MARKINGS ONLY)
FIGURE 2 (SHEET 1)

BOEING PROPRIETARY - Copyright © - Unpublished Work - See title page for details.

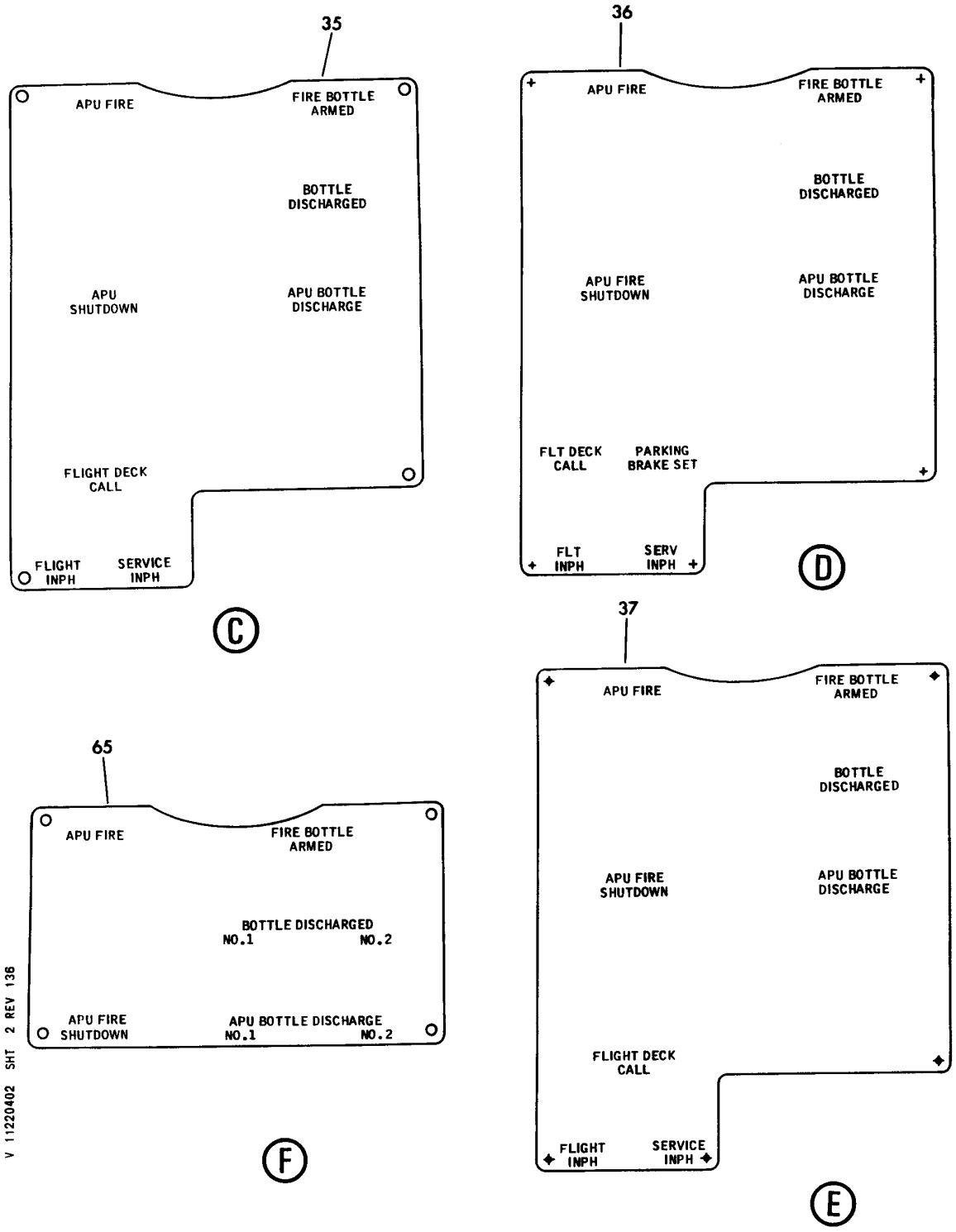

PANEL ASSY-APU SHUTDOWN P40 (PLACARDS AND MARKINGS ONLY)
FIGURE 2 (SHEET 2)

BOEING PROPRIETARY - Copyright © - Unpublished Work - See title page for details.

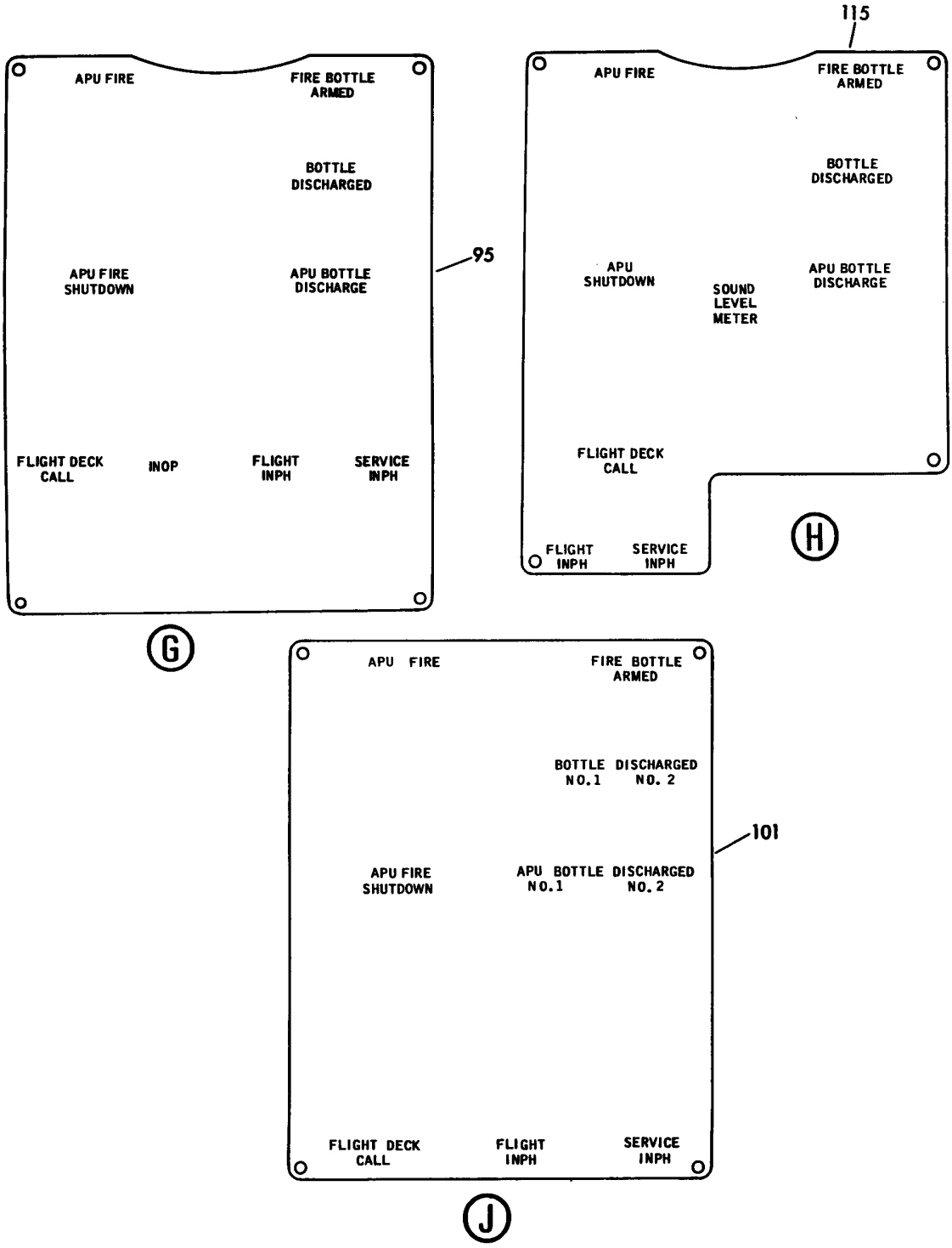

V 1122040 2 SHT 3 REV 141

PANEL ASSY-APU SHUTDOWN P40 (PLACARDS AND MARKINGS ONLY)
FIGURE 2 (SHEET 3)

BOEING PROPRIETARY - Copyright © - Unpublished Work - See title page for details.

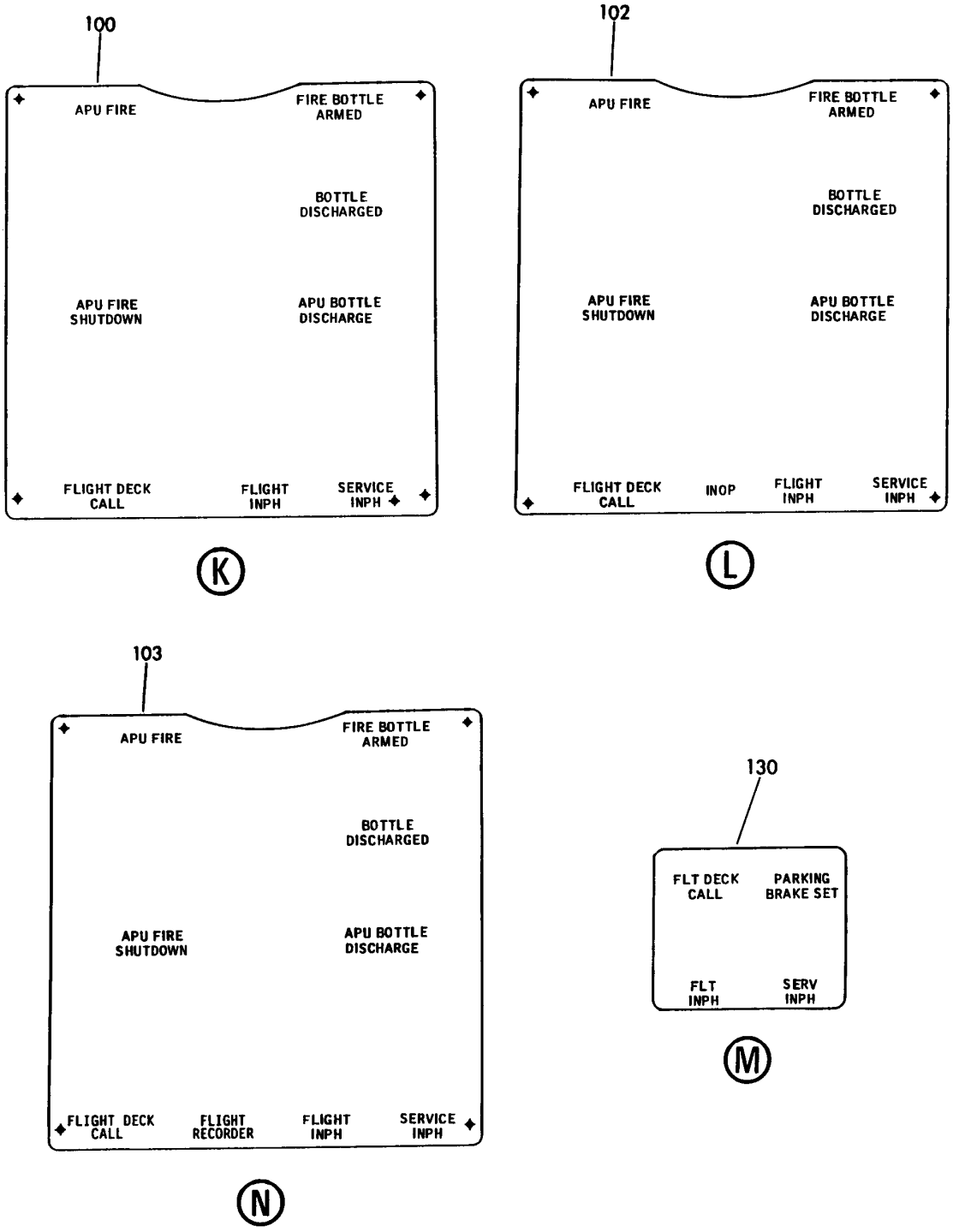

V 11220402 SHT 4 REV 148

PANEL ASSY-APU SHUTDOWN P40 (PLACARDS AND MARKINGS ONLY)
FIGURE 2 (SHEET 4)

BOEING PROPRIETARY - Copyright © - Unpublished Work - See title page for details.

FIG ITEM	PART NUMBER	1 2 3 4 5 6 7 NOMENCLATURE	EFFECT FROM TO	UNITS PER ASSY
2				
		PANEL ASSY-APU SHUTDOWN P40 (PLACARDS AND MARKINGS ONLY)		
- 1	284T0719-18	PANEL ASSY-APU SHUTDOWN P40 (PLACARDS AND MARKINGS ONLY)		RF
		FOR NHA/OTHER SYS DET SEE: 26-15-01-01		
8	BAC27TEX1430	.MARKER-ALUMINUM FOIL- PLACARD CONTENT: APU FIRE WARNING HORN		1
		ATTACHING PARTS		
- 10	BACR15BB3A	.RIVET- SIZE DETERMINED ON INSTL.		2
- 15	AN960PD3	.WASHER-		2
		-------*-------		
20	BAC27TEX1429	.MARKER-ALUMINUM FOIL- PLACARD CONTENT: P40 APU SHUTDOWN PANEL		1
		ATTACHING PARTS		
- 25	BACR15BB3A	.RIVET- SIZE DETERMINED ON INSTL.		4
- 30	AN960PD3	.WASHER-		4
		-------*-------		
50	BAC27TEX1432	.MARKER-ALUMINUM FOIL		1
		ATTACHING PARTS		
- 55	BACR15BB3A	.RIVET- SIZE DETERMINED ON INSTL.		4
- 60	AN960PD3	.WASHER		4
		-------*-------		
100	BAC27TEX4347	.MARKER-ALUMINUM FOIL		1
		ATTACHING PARTS		
- 105	BACR15BB3A	.RIVET- SIZE DETERMINED ON INSTL.		4
- 110	AN960PD3	.WASHER		4
		-------*-------		

ILLUSTRATION ITEMS NOT ON PARTS LIST ARE NOT APPLICABLE

- ITEM NOT ILLUSTRATED

BOEING PROPRIETARY - Copyright © - Unpublished Work - See title page for details.

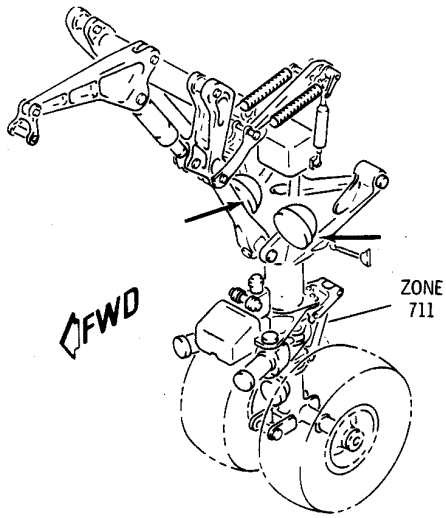

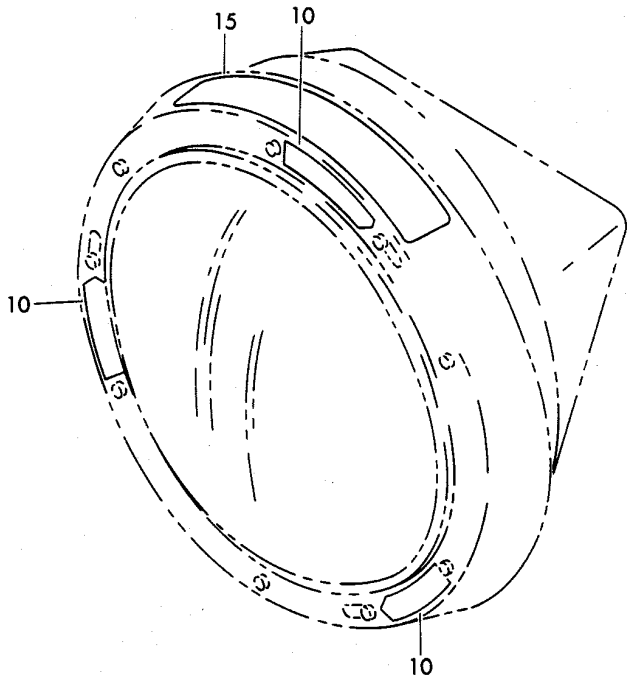

V 11220501 SHT 1 REV 011

LIGHT INSTL-NOSE GEAR LDG (PLACARDS AND MARKINGS ONLY)
FIGURE 1

BOEING PROPRIETARY - Copyright © - Unpublished Work - See title page for details.

FIG ITEM	PART NUMBER	1 2 3 4 5 6 7 NOMENCLATURE	EFFECT FROM TO	UNITS PER ASSY
1		LIGHT INSTL-NOSE GEAR LDG (PLACARDS AND MARKINGS ONLY)		
- 1	284T0588-1	LIGHT INSTL-NOSE GEAR LDG (PLACARDS AND MARKINGS ONLY) POSITION DATA: LH FOR NHA/OTHER SYS DET SEE: 32-20-51-01		RF
- 5	284T0588-2	LIGHT INSTL-NOSE GEAR LDG (PLACARDS AND MARKINGS ONLY) POSITION DATA: RH FOR NHA/OTHER SYS DET SEE: 32-20-51-01		RF
10	BAC27TEX1118	.MARKER-ALUMINUM FOIL- ADJUSTMENT SCREW DO NOT TURN WHEN REMOVING LAMP		3
15	BAC27TEX0972	.MARKER-ALUMINUM FOIL- PLACARD CONTENT: NO STEP		1

ILLUSTRATION ITEMS NOT ON PARTS LIST ARE NOT APPLICABLE

- ITEM NOT ILLUSTRATED

BOEING PROPRIETARY - Copyright © - Unpublished Work - See title page for details.

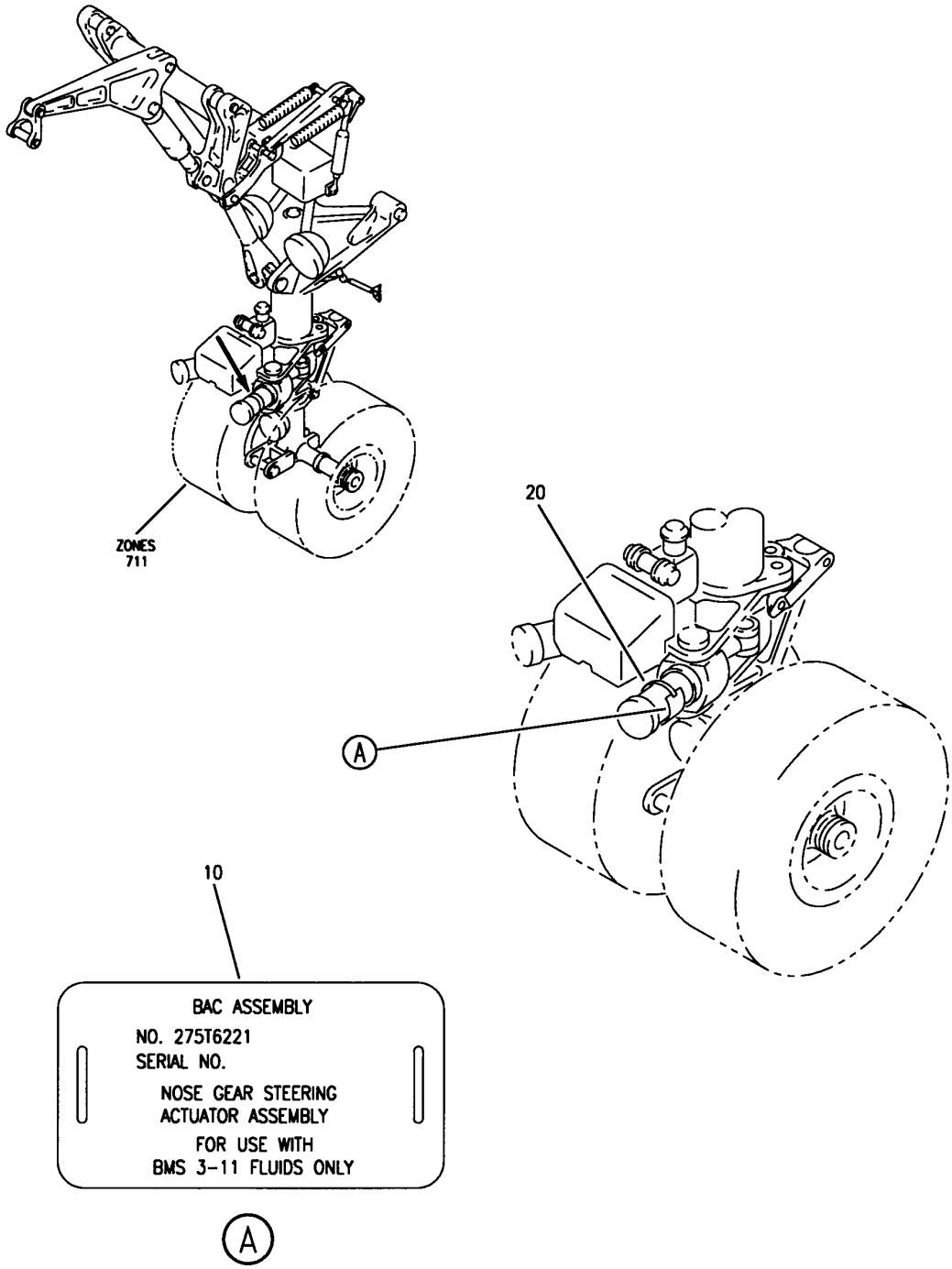

V 11220602 REV 199

ACTUATOR ASSY-NLG STEERING (PLACARDS AND MARKINGS ONLY)
FIGURE 2

BOEING PROPRIETARY - Copyright © - Unpublished Work - See title page for details.

FIG ITEM	PART NUMBER	1 2 3 4 5 6 7 NOMENCLATURE	EFFECT FROM TO	UNITS PER ASSY
2		ACTUATOR ASSY-NLG STEERING (PLACARDS AND MARKINGS ONLY)		
- 1	275T6221-2	ACTUATOR ASSY-NLG STEERING MISCELLANEOUS DATA: FOR SPARES PROCURE LOWER COMPONENTS COMPONENT MAINT MANUAL REF: 32-51-10 OPTIONAL PART: 275T6221-3 FOR NHA/OTHER SYS DET SEE: 32-51-04-01		RF
- 1	275T6221-3	ACTUATOR ASSY-NLG STEERING COMPONENT MAINT MANUAL REF: 32-51-10 OPTIONAL PART: 275T6221-2 FOR NHA/OTHER SYS DET SEE: 32-51-04-01		RF
10	BAC27THY1	.NAMEPLATE		1
20	69B80300-2	.STRAP		1

ILLUSTRATION ITEMS NOT ON PARTS LIST ARE NOT APPLICABLE

- ITEM NOT ILLUSTRATED

BOEING PROPRIETARY - Copyright © - Unpublished Work - See title page for details.

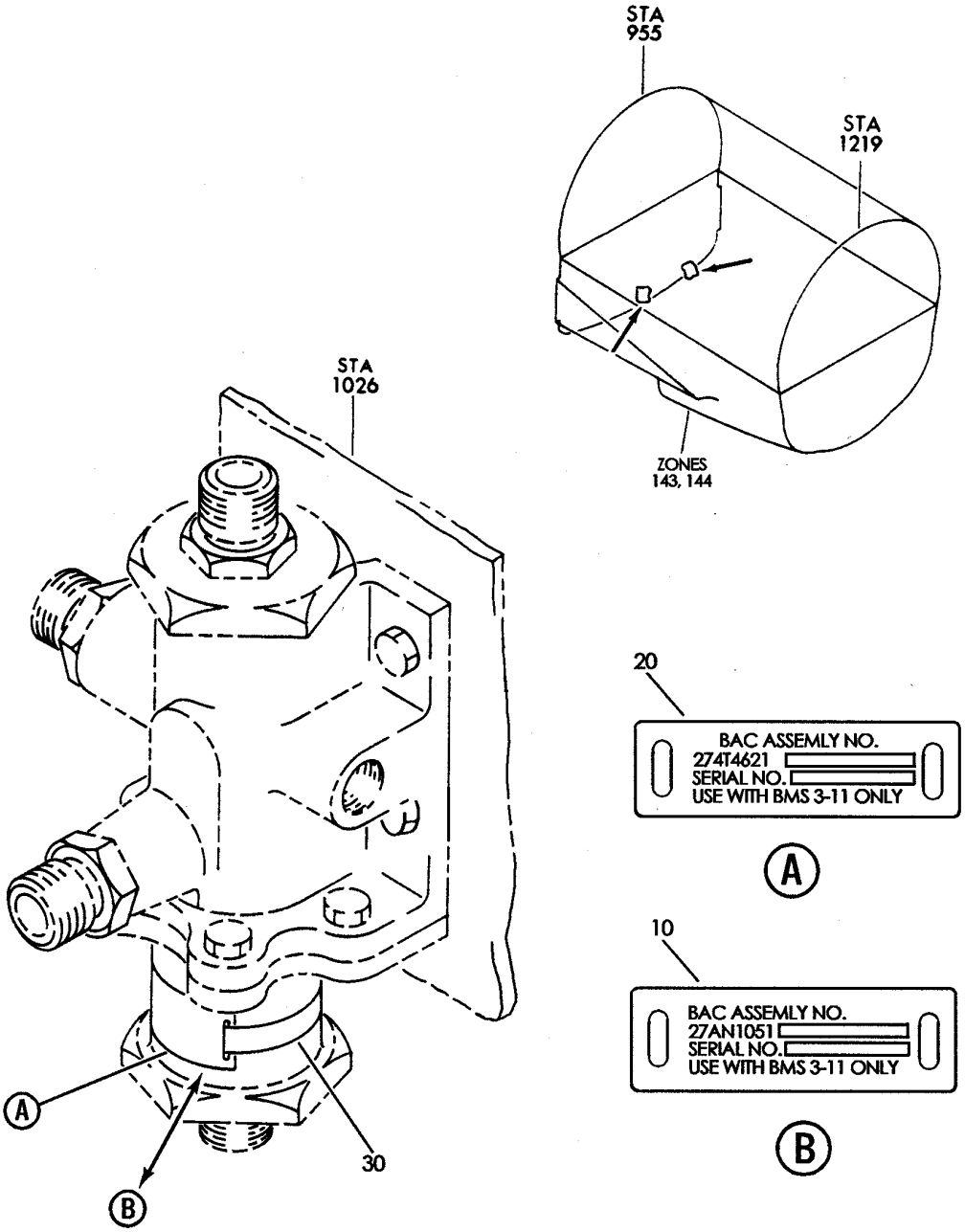

V 11220603 REV 225

VALVE ASSY-ALTERNATE BRAKE SELECTOR (PLACARDS AND MARKINGS ONLY)
FIGURE 3

BOEING PROPRIETARY - Copyright © - Unpublished Work - See title page for details.

FIG ITEM	PART NUMBER	1 2 3 4 5 6 7 NOMENCLATURE	EFFECT FROM TO	UNITS PER ASSY
3		VALVE ASSY-ALTERNATE BRAKE SELECTOR (PLACARDS AND MARKINGS ONLY)		
- 1	274T4621-2	VALVE ASSY-ALTERNATE BRAKE SELECTOR (PLACARDS AND MARKINGS ONLY) MISCELLANEOUS DATA: NOT AN INITIAL PROVISIONING SPARE COMPONENT MAINT MANUAL REF: 32-41-10 USED ON: 274T4620-3 FOR NHA/OTHER SYS DET SEE: 32-41-01-05 32-41-10-01		RF
- 1	274T4621-3	VALVE ASSY-ALTERNATE BRAKE SELECTOR (PLACARDS AND MARKINGS ONLY) MISCELLANEOUS DATA: NOT AN INITIAL PROVISIONING SPARE COMPONENT MAINT MANUAL REF: 32-41-10 USED ON: 274T4620-3 274T4620-5 FOR NHA/OTHER SYS DET SEE: 32-41-01-05 32-41-10-01		RF
- 1	274T4621-4	VALVE ASSY-ALTERNATE BRAKE SELECTOR (PLACARDS AND MARKINGS ONLY) MISCELLANEOUS DATA: NOT AN INITIAL PROVISIONING SPARE COMPONENT MAINT MANUAL REF: 32-41-10 USED ON: 274T4620-3 274T4620-5 274T4620-7 FOR NHA/OTHER SYS DET SEE: 32-41-01-05 32-41-10-01		RF

ILLUSTRATION ITEMS NOT ON PARTS LIST ARE NOT APPLICABLE

- ITEM NOT ILLUSTRATED

BOEING PROPRIETARY - Copyright © - Unpublished Work - See title page for details.

FIG ITEM	PART NUMBER	1 2 3 4 5 6 7 NOMENCLATURE	EFFECT FROM TO	UNITS PER ASSY
3				
- 1	274N1051-3	VALVE ASSY-ALTERNATE BRAKE SELECTOR (PLACARDS AND MARKINGS ONLY) FUNCTIONAL DESCRIPTION: AUTOMATICALLY SELECTS THE SOURCE OF HYDRAULIC PRESSURE TO THE ALTERNATE BRAKE METERING VALVES IF THERE IS A LOSS OF PRESSURE IN HYDRAULICS MISCELLANEOUS DATA: NOT AN INITIAL PROVISIONING SPARE COMPONENT MAINT MANUAL REF: 32-41-12 USED ON: 274T4620-8 274T4620-10 FOR NHA/OTHER SYS DET SEE: 32-41-01-05 32-41-10-01		RF
10	BAC27NHY0156	.NAMEPLATE- USED ON: 274N1051-3		1
20	BAC27THY21	.NAMEPLATE- USED ON: 274T4621-2 274T4621-3 274T4621-4		1
30	69B80300-18	.STRAP		1

ILLUSTRATION ITEMS NOT ON PARTS LIST ARE NOT APPLICABLE

- ITEM NOT ILLUSTRATED

BOEING PROPRIETARY - Copyright © - Unpublished Work - See title page for details.

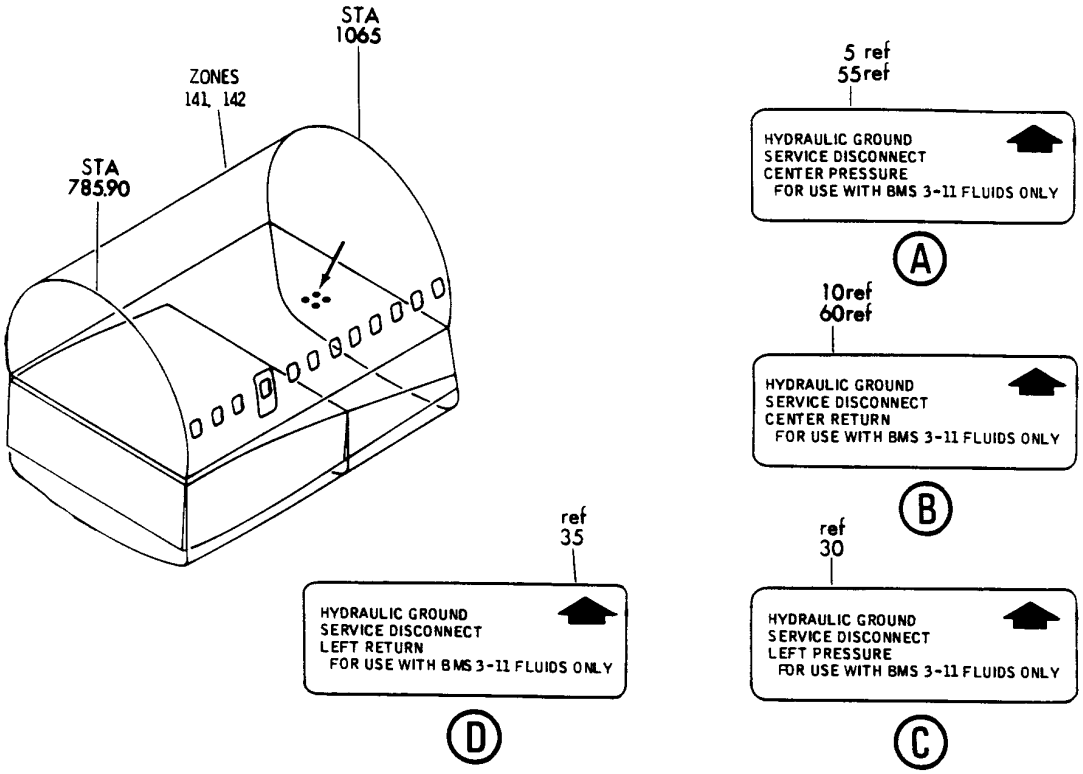

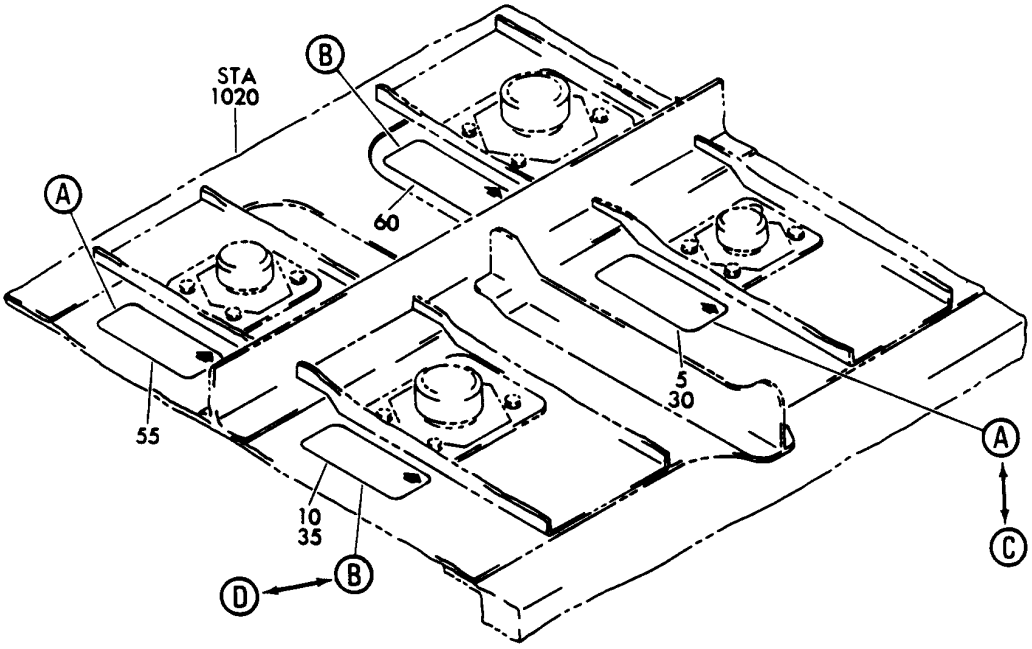

V 1120701 SHT 1 REV 018

SERVICE INSTL-SYS AND HYDR GND (PLACARDS AND MARKINGS ONLY) SECT. 45 CTR
FIGURE 1

BOEING PROPRIETARY - Copyright © - Unpublished Work - See title page for details.

FIG ITEM	PART NUMBER	1 2 3 4 5 6 7 NOMENCLATURE	EFFECT FROM TO	UNITS PER ASSY
1		SERVICE INSTL-SYS AND HYDR GND (PLACARDS AND MARKINGS ONLY) SECT. 45 CTR		
- 1	272T0050-1	SERVICE INSTL-SYS AND HYDR GND PREMODULE (PLACARDS AND MARKINGS ONLY) POSITION DATA: SECT. 45 FOR NHA/OTHER SYS DET SEE: 29-18-56-02		RF
5	BAC27THY0133	.MARKER-ALUMINUM FOIL PLACARD CONTENT: HYDRAULIC GROUND SERVICE DISCONNECT CENTER PRESSURE		1
10	BAC27THY0134	.MARKER-ALUMINUM FOIL PLACARD CONTENT: HYDRAULIC GROUND SERVICE DISCONNECT CENTER RETURN		1

ILLUSTRATION ITEMS NOT ON PARTS LIST ARE NOT APPLICABLE

- ITEM NOT ILLUSTRATED

BOEING PROPRIETARY - Copyright © - Unpublished Work - See title page for details.

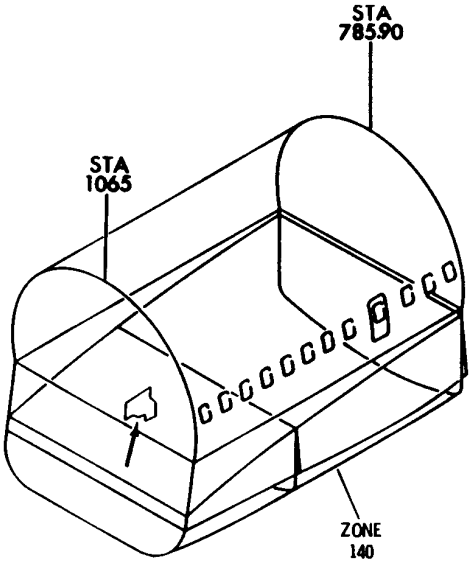

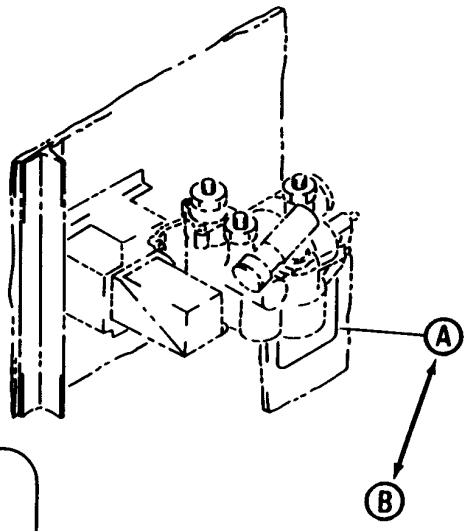

RAM AIR TURBINE PUMP
CHECK OUT INSTRUCTIONS

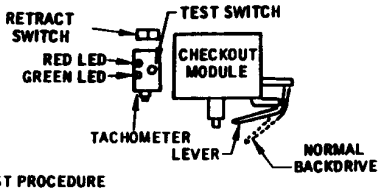

TEST PROCEDURE

1. CLEAR RAT AREA (RH WING-BODY FAIRING.)
2. DEPLOY RAT WITH SWITCH ON FLIGHT DECK. VERIFY UNLOCKED LIGHT ILLUMINATES.
3. CHECK GOVERNOR SPRINGS BY MANUALLY TWISTING TURBINE BLADES TO FINE PITCH AND OBSERVING THAT THEY RETURN TO COARSE PITCH UPON RELEASE.
4. PRESSURIZE HYD SYSTEM "C" WITH ADP (ELECTRIC PUMPS ARE NOT ADEQUATE).
5. CLEAR RAT. REMOVE LOCKWIRE AND MOVE TEST LEVER TO "BACKDRIVE" POSITION. VERIFY THAT GREEN LIGHT ILLUMINATES WHEN RATE REACHES STEADY SPEED. PRESS TEST SWITCH TO CHECK INTEGRITY OF RED LAMP. (RED LIGHT INDICATES OVERSPEED.)
6. QUICKLY RETURN TEST LEVER TO NORMAL POSITION AND VERIFY THAT RAT PRESSURE LIGHT (FLIGHT DECK) ILLUMINATES MOMEMTARILY AS RAT COASTS TO A STOP.
7. DEPRESSURIZE HYDRAULIC SYSTEM "C".
8. LOCKWIRE TEST LEVER IN NORMAL POSITION.
9. REPEAT STEP 3.
10. MANUALLY ALIGN PROPELLER INDEXING MARKS ON HUB AND STRUT AND CHECK THAT RAT DEPLOYMENT SWITCH IS IN "OFF" MODE.
11. RETRACT RAT 14"-17" USING SWITCH. VERIFY THAT PIN HAS LOCKED TURBINE. COMPLETE RETRACTION .VERIFY UNLOCKED LIGHT EXTINGUISHED.

5

A

V 11220801 SHT 1 REV 133

CHECKOUT INSTL-RAM AIR TURB MODULE AND TACH (PLACARDS AND MARKINGS ONLY)
FIGURE 1 (SHEET 1)

BOEING PROPRIETARY - Copyright © - Unpublished Work - See title page for details.

6

RAM AIR TURBINE PUMP
CHECK OUT INSTRUCTIONS

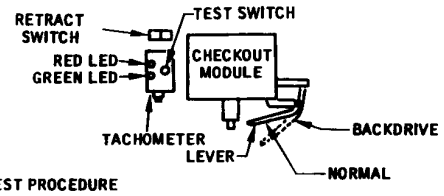

TEST PROCEDURE

1. CLEAR RAT AREA (RH WING-BODY FAIRING.)
2. DEPLOY RAT WITH SWITCH ON FLIGHT DECK. VERIFY UNLOCKED LIGHT ILLUMINATES.
3. CHECK GOVERNOR SPRINGS BY MANUALLY TWISTING TURBINE BLADES TO FINE PITCH AND OBSERVING THAT THEY RETURN TO COARSE PITCH UPON RELEASE.
4. PRESSURIZE HYD SYSTEM "C" WITH ADP (ELECTRIC PUMPS ARE NOT ADEQUATE).
5. CLEAR RAT. REMOVE LOCKWIRE. PRESS AND HOLD TEST SWITCH AND MOVE LEVER TO "BACKDRIVE" POSITION. VERIFY THAT RED AND GREEN LAMPS ILLUMINATE AND RELEASE TEST SWITCH. VERIFY THAT GREEN LAMP ILLUMINATES WHEN RAT. REACHES STEADY SPEED. IF RED LAMP ILLUMINATES IMMEDIATELY RETURN LEVER TO NORMAL.
6. QUICKLY RETURN TEST LEVER TO NORMAL POSITION AND VERIFY THAT RAT PRESSURE LIGHT (FLIGHT DECK) ILLUMINATES MOMEMTARILY AS RAT STOPS.
7. DEPRESSURIZE HYDRAULIC SYSTEM "C".
8. LOCKWIRE TEST LEVER IN NORMAL POSITION.
9. REPEAT STEP 3.
10. MANUALLY ALIGN PROPELLER INDEXING MARKS ON HUB AND STRUT AND CHECK THAT RAT DEPLOYMENT SWITCH IS IN "OFF" MODE.
11. RETRACT RAT 14"-17" USING SWITCH. VERIFY THAT PIN HAS LOCKED TURBINE. COMPLETE RETRACTION .VERIFY UNLOCKED LIGHT EXTINGUISHED.

V 11220801 SHT 2 REV 133

B

CHECKOUT INSTL-RAM AIR TURB MODULE AND TACH (PLACARDS AND MARKINGS ONLY)
FIGURE 1 (SHEET 2)

BOEING PROPRIETARY - Copyright © - Unpublished Work - See title page for details.

FIG ITEM	PART NUMBER	1 2 3 4 5 6 7 NOMENCLATURE	EFFECT FROM TO	UNITS PER ASSY
1		CHECKOUT INSTL-RAM AIR TURB MODULE AND TACH (PLACARDS AND MARKINGS ONLY)		
- 1	258T7200-5	CHECKOUT INSTL-RAM AIR TURB MODULE AND TACH (PLACARDS AND MARKINGS ONLY)		RF
5	BAC27TCT0328	.MARKER-ALUMINUM FOIL OPTIONAL PART: BAC27TCT0444		1
6	BAC27TCT0444	.MARKER-ALUMINUM FOIL OPTIONAL PART: BAC27TCT0328		1

ILLUSTRATION ITEMS NOT ON PARTS LIST ARE NOT APPLICABLE

- ITEM NOT ILLUSTRATED

BOEING PROPRIETARY - Copyright © - Unpublished Work - See title page for details.

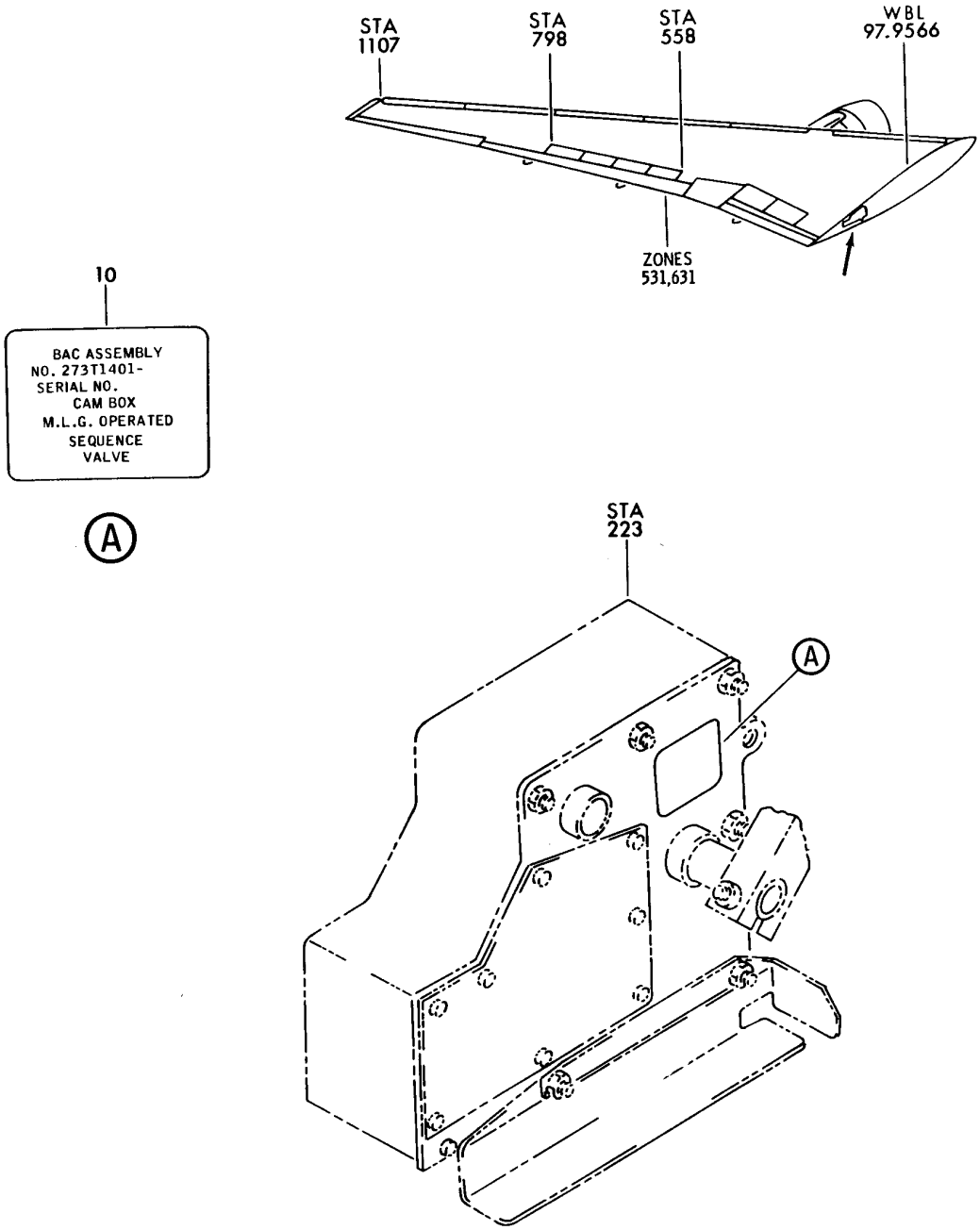

V 11220802 REV 114

BOX ASSY-CAM (PLACARDS AND MARKINGS ONLY)
FIGURE 2

BOEING PROPRIETARY - Copyright © - Unpublished Work - See title page for details.

FIG ITEM	PART NUMBER	1 2 3 4 5 6 7 NOMENCLATURE	EFFECT FROM TO	UNITS PER ASSY
2		BOX ASSY-CAM (PLACARDS AND MARKINGS ONLY)		
- 1	273T1401-1	BOX ASSY-CAM (PLACARDS AND MARKINGS ONLY) POSITION DATA: LH SIDE COMPONENT MAINT MANUAL REF: 32-32-41 FOR NHA/OTHER SYS DET SEE: 32-32-08-01		RF
- 1	273T1401-3	BOX ASSY-CAM (PLACARDS AND MARKINGS ONLY) POSITION DATA: LH SIDE COMPONENT MAINT MANUAL REF: 32-32-41 FOR NHA/OTHER SYS DET SEE: 32-32-08-01		RF
- 1	273T1401-5	BOX ASSY-CAM (PLACARDS AND MARKINGS ONLY) POSITION DATA: LH SIDE COMPONENT MAINT MANUAL REF: 32-32-41 FOR NHA/OTHER SYS DET SEE: 32-32-08-01		RF
- 1	273T1401-9	BOX ASSY-CAM (PLACARDS AND MARKINGS ONLY) POSITION DATA: LH SIDE FOR NHA/OTHER SYS DET SEE: 32-32-08-01		RF
- 5	273T1401-2	BOX ASSY-CAM (PLACARDS AND MARKINGS ONLY) POSITION DATA: RH SIDE COMPONENT MAINT MANUAL REF: 32-32-41 FOR NHA/OTHER SYS DET SEE: 32-32-08-01		RF

ILLUSTRATION ITEMS NOT ON PARTS LIST ARE NOT APPLICABLE

- ITEM NOT ILLUSTRATED

BOEING PROPRIETARY - Copyright © - Unpublished Work - See title page for details.

FIG ITEM	PART NUMBER	1 2 3 4 5 6 7 NOMENCLATURE	EFFECT FROM TO	UNITS PER ASSY
2				
- 5	273T1401-4	BOX ASSY-CAM (PLACARDS AND MARKINGS ONLY) POSITION DATA: RH SIDE COMPONENT MAINT MANUAL REF: 32-32-41 FOR NHA/OTHER SYS DET SEE: 32-32-08-01		RF
- 5	273T1401-6	BOX ASSY-CAM (PLACARDS AND MARKINGS ONLY) POSITION DATA: RH SIDE COMPONENT MAINT MANUAL REF: 32-32-41 FOR NHA/OTHER SYS DET SEE: 32-32-08-01		RF
- 5	273T1401-10	BOX ASSY-CAM (PLACARDS AND MARKINGS ONLY) POSITION DATA: RH SIDE FOR NHA/OTHER SYS DET SEE: 32-32-08-01		RF
10	BAC27THY38	.PLACARD-ALUMINUM FOIL		1

ILLUSTRATION ITEMS NOT ON PARTS LIST ARE NOT APPLICABLE

- ITEM NOT ILLUSTRATED

BOEING PROPRIETARY - Copyright © - Unpublished Work - See title page for details.

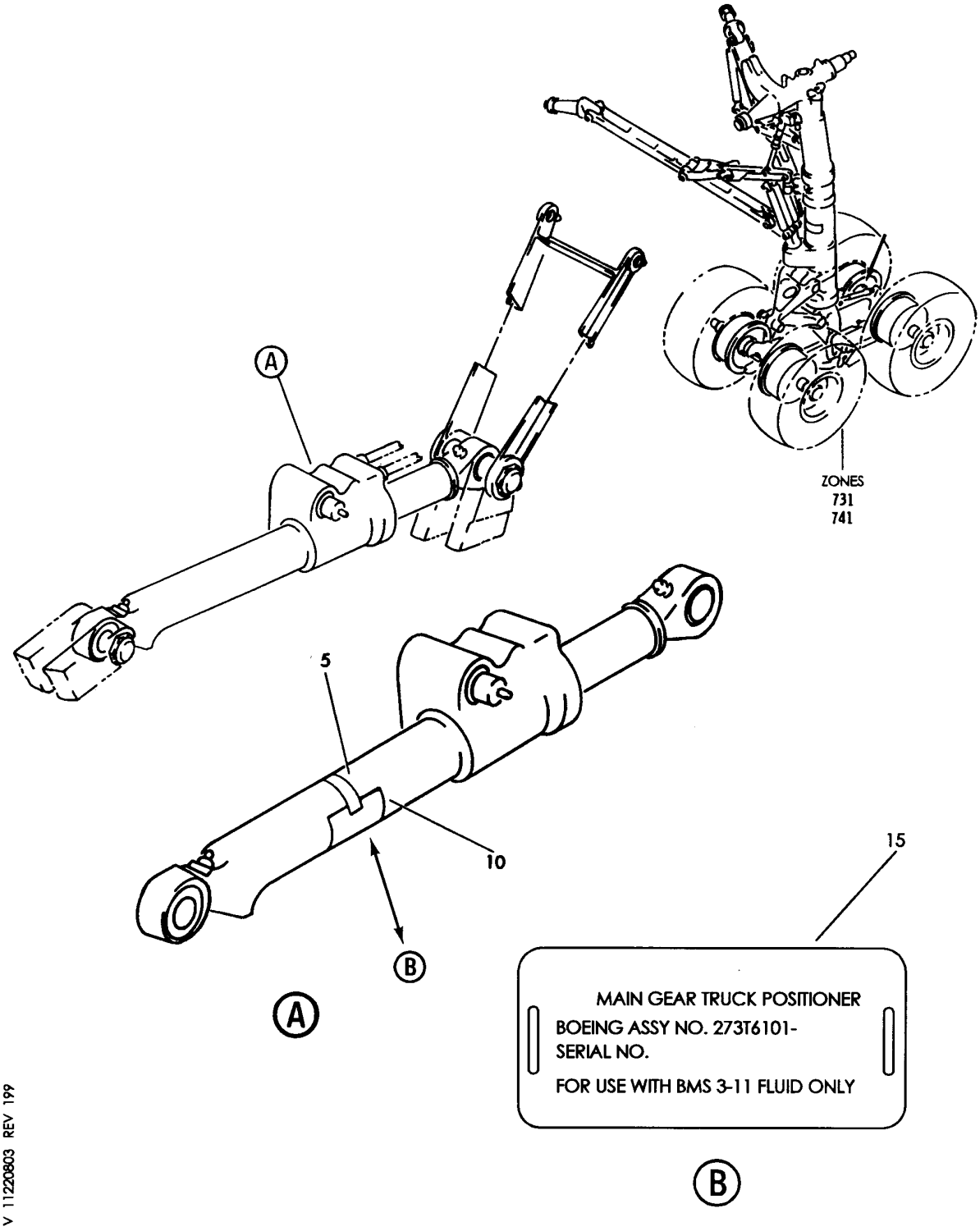

POSITIONER ASSY-(PLACARDS AND MARKINGS ONLY)
FIGURE 3

BOEING PROPRIETARY - Copyright © - Unpublished Work - See title page for details.

FIG ITEM	PART NUMBER	1 2 3 4 5 6 7 NOMENCLATURE	EFFECT FROM TO	UNITS PER ASSY
3		POSITIONER ASSY-(PLACARDS AND MARKINGS ONLY)		
- 1	273T6101-3	POSITIONER ASSY-(PLACARDS AND MARKINGS ONLY) MISCELLANEOUS DATA: FOR SPARES PROCURE NEXT HIGHER ASSEMBLY COMPONENT MAINT MANUAL REF: 32-32-55 FOR NHA/OTHER SYS DET SEE: 32-32-18-01		RF
- 1	273T6101-4	POSITIONER ASSY-(PLACARDS AND MARKINGS ONLY) MISCELLANEOUS DATA: FOR SPARES PROCURE NEXT HIGHER ASSEMBLY COMPONENT MAINT MANUAL REF: 32-32-55 FOR NHA/OTHER SYS DET SEE: 32-32-18-01		RF
- 1	273T6101-5	POSITIONER ASSY-(PLACARDS AND MARKINGS ONLY) MISCELLANEOUS DATA: FOR SPARES PROCURE NEXT HIGHER ASSEMBLY COMPONENT MAINT MANUAL REF: 32-32-55 OPTIONAL PART: 273T6101-6 FOR NHA/OTHER SYS DET SEE: 32-32-18-01		RF
- 1	273T6101-6	POSITIONER ASSY-(PLACARDS AND MARKINGS ONLY) MISCELLANEOUS DATA: FOR SPARES PROCURE NEXT HIGHER ASSEMBLY COMPONENT MAINT MANUAL REF: 32-32-55 OPTIONAL PART: 273T6101-5 FOR NHA/OTHER SYS DET SEE: 32-32-18-01		RF

ILLUSTRATION ITEMS NOT ON PARTS LIST ARE NOT APPLICABLE

- ITEM NOT ILLUSTRATED

BOEING PROPRIETARY - Copyright © - Unpublished Work - See title page for details.

FIG ITEM	PART NUMBER	1 2 3 4 5 6 7 NOMENCLATURE	EFFECT FROM TO	UNITS PER ASSY
3				
- 1	273T6101-8	POSITIONER ASSY-(PLACARDS AND MARKINGS ONLY) MISCELLANEOUS DATA: 273T6101-8 IS A 273T6101-4 REWORKED PER S/B 767-32-0035 FOR SPARES PROCURE NEXT HIGHER ASSEMBLY COMPONENT MAINT MANUAL REF: 32-32-55 POST SERVICE BULLETIN: 32-0035 FOR NHA/OTHER SYS DET SEE: 32-32-18-01		RF
- 1	273T6101-9	POSITIONER ASSY-(PLACARDS AND MARKINGS ONLY) MISCELLANEOUS DATA: FOR SPARES PROCURE NEXT HIGHER ASSEMBLY COMPONENT MAINT MANUAL REF: 32-32-55 POST SERVICE LETTER: 32-9A FOR NHA/OTHER SYS DET SEE: 32-32-18-01		RF
5	273T0050-4	.STRAP- USED ON: 273T6101-4 273T6101-5 273T6101-6 273T6101-8 273T6101-9		1
10	BAC27THY0048	.NAMEPLATE- USED ON: 273T6101-3		1
15	BAC27THY0157	.NAMEPLATE- USED ON: 273T6101-4 273T6101-5 273T6101-6 273T6101-8 273T6101-9		1

ILLUSTRATION ITEMS NOT ON PARTS LIST ARE NOT APPLICABLE

- ITEM NOT ILLUSTRATED

BOEING PROPRIETARY - Copyright © - Unpublished Work - See title page for details.

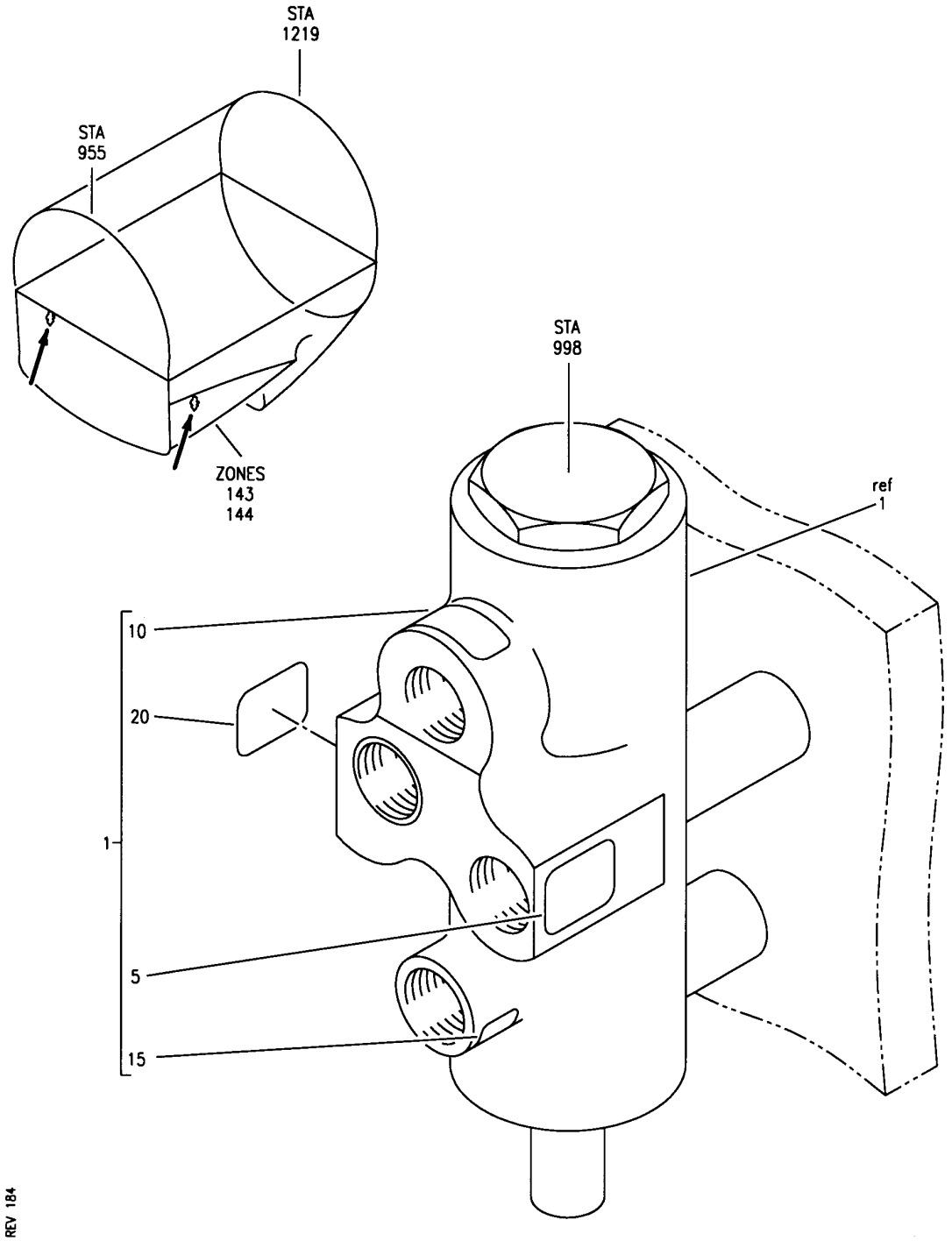

V 11220804 REV 184

ACTUATOR ASSY (PLACARDS AND MARKINGS ONLY)
FIGURE 4

BOEING PROPRIETARY - Copyright © - Unpublished Work - See title page for details.

FIG ITEM	PART NUMBER	1 2 3 4 5 6 7 NOMENCLATURE	EFFECT FROM TO	UNITS PER ASSY
4		ACTUATOR ASSY (PLACARDS AND MARKINGS ONLY)		
- 1	273T4561-2	ACTUATOR ASSY- (PLACARDS AND MARKINGS ONLY) MISCELLANEOUS DATA: FOR SPARES PROCURE LOWER COMPONENTS COMPONENT MAINT MANUAL REF: 32-32-13 FOR NHA/OTHER SYS DET SEE: 32-32-13-01		RF
- 1	273T4561-3	ACTUATOR ASSY- (PLACARDS AND MARKINGS ONLY) MISCELLANEOUS DATA: FOR SPARES PROCURE LOWER COMPONENTS COMPONENT MAINT MANUAL REF: 32-32-13 FOR NHA/OTHER SYS DET SEE: 32-32-13-01		RF
- 1	273T4561-4	ACTUATOR ASSY- (PLACARDS AND MARKINGS ONLY) MISCELLANEOUS DATA: FOR SPARES PROCURE LOWER COMPONENTS COMPONENT MAINT MANUAL REF: 32-32-13 FOR NHA/OTHER SYS DET SEE: 32-32-13-01		RF
- 1	273T4561-6	ACTUATOR ASSY- (PLACARDS AND MARKINGS ONLY) MISCELLANEOUS DATA: FOR SPARES PROCURE LOWER COMPONENTS COMPONENT MAINT MANUAL REF: 32-32-13 FOR NHA/OTHER SYS DET SEE: 32-32-13-01		RF

ILLUSTRATION ITEMS NOT ON PARTS LIST ARE NOT APPLICABLE

- ITEM NOT ILLUSTRATED

BOEING PROPRIETARY - Copyright © - Unpublished Work - See title page for details.

FIG ITEM	PART NUMBER	1 2 3 4 5 6 7 NOMENCLATURE	EFFECT FROM TO	UNITS PER ASSY
4				
- 1	273T4561-8	ACTUATOR ASSY- (PLACARDS AND MARKINGS ONLY) MISCELLANEOUS DATA: FOR SPARES PROCURE LOWER COMPONENTS COMPONENT MAINT MANUAL REF: 32-32-13 FOR NHA/OTHER SYS DET SEE: 32-32-13-01		RF
- 1	273T4561-9	ACTUATOR ASSY- (PLACARDS AND MARKINGS ONLY) MISCELLANEOUS DATA: FOR SPARES PROCURE LOWER COMPONENTS COMPONENT MAINT MANUAL REF: 32-32-13 USED ON: 257T1200-18 FOR NHA/OTHER SYS DET SEE: 32-32-13-01		RF
5	BAC27THY4	.MARKER-ALUMINUM FOIL RET		1
10	BAC27THY23	.MARKER-ALUMINUM FOIL PRESS OPTIONAL PART: BAC27THY203		1
10	BAC27THY203	.MARKER-ALUMINUM FOIL PRESS OPTIONAL PART: BAC27THY23 USED ON: 273T4561-9		1
15	BAC27THY24	.MARKER-ALUMINUM FOIL RESET		1
20	BAC27THY25	.MARKER-ALUMINUM FOIL DOOR ACTR OPEN		1

ILLUSTRATION ITEMS NOT ON PARTS LIST ARE NOT APPLICABLE

- ITEM NOT ILLUSTRATED

BOEING PROPRIETARY - Copyright © - Unpublished Work - See title page for details.

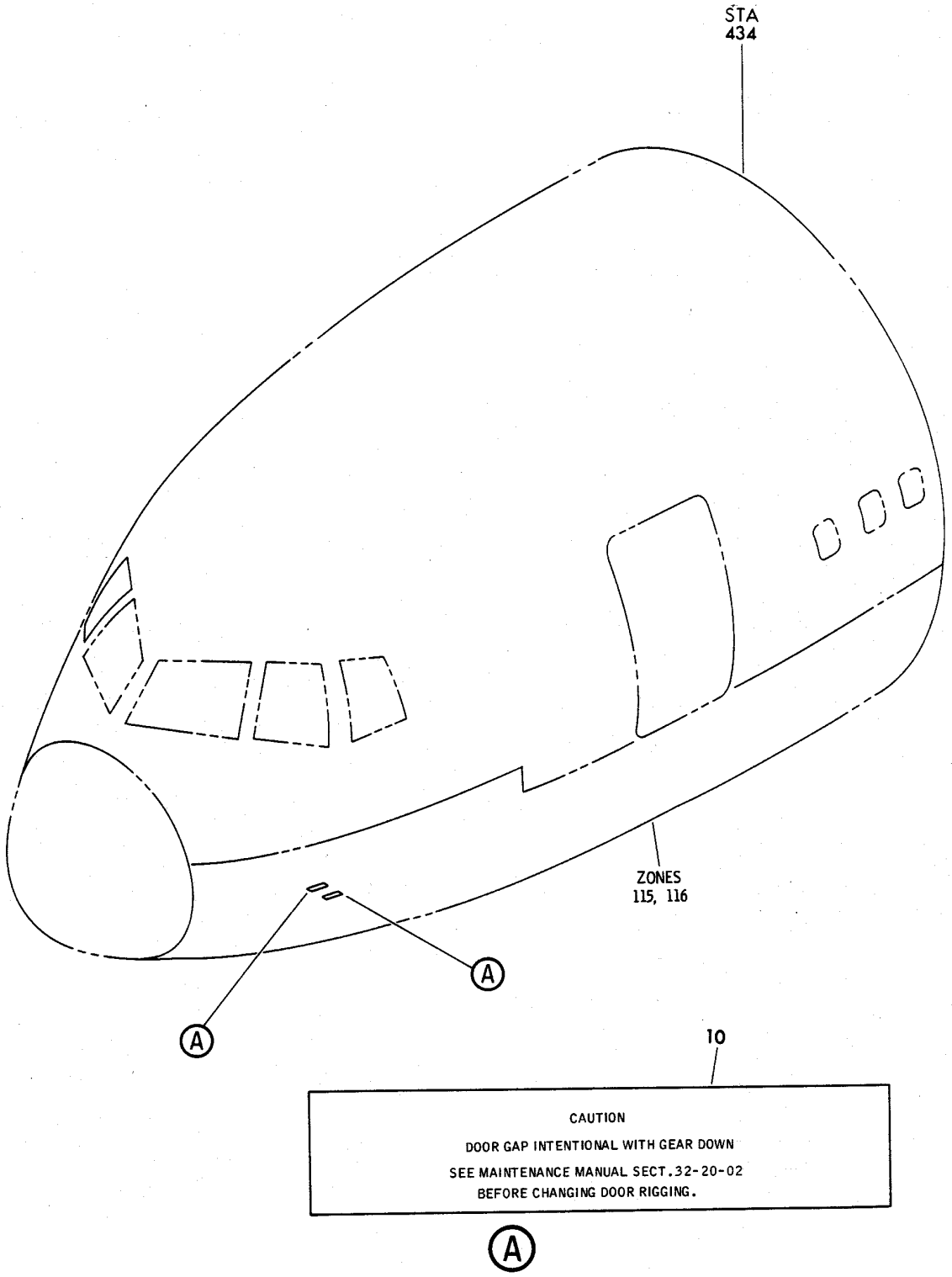

V 11220901 SHT 1 REV 01B

MECHANISM INSTL-NLG FWD DOOR OPERATING (PLACARDS AND MARKINGS ONLY)
FIGURE 1

BOEING PROPRIETARY - Copyright © - Unpublished Work - See title page for details.

FIG ITEM	PART NUMBER	1 2 3 4 5 6 7 NOMENCLATURE	EFFECT FROM TO	UNITS PER ASSY
1		MECHANISM INSTL-NLG FWD DOOR OPERATING (PLACARDS AND MARKINGS ONLY)		
- 1	162T4000-5	MECHANISM INSTL-NLG DOOR OPERATING (PLACARDS AND MARKINGS ONLY) POSITION DATA: FWD LH FOR NHA/OTHER SYS DET SEE: 32-00-00-01		RF
- 5	162T4000-6	MECHANISM INSTL-NLG DOOR OPERATING (PLACARDS AND MARKINGS ONLY) POSITION DATA: FWD RH FOR NHA/OTHER SYS DET SEE: 32-00-00-01		RF
10	BAC27TLG0005	.MARKER-ALUMINUM FOIL		1

ILLUSTRATION ITEMS NOT ON PARTS LIST ARE NOT APPLICABLE

- ITEM NOT ILLUSTRATED

BOEING PROPRIETARY - Copyright © - Unpublished Work - See title page for details.

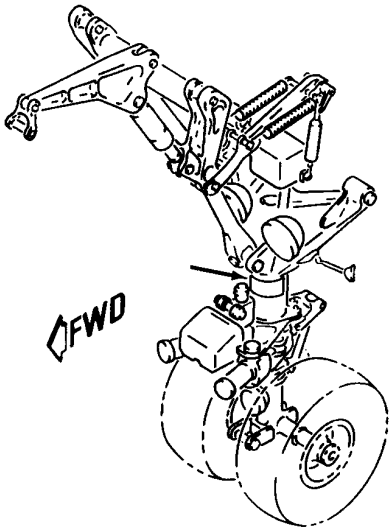

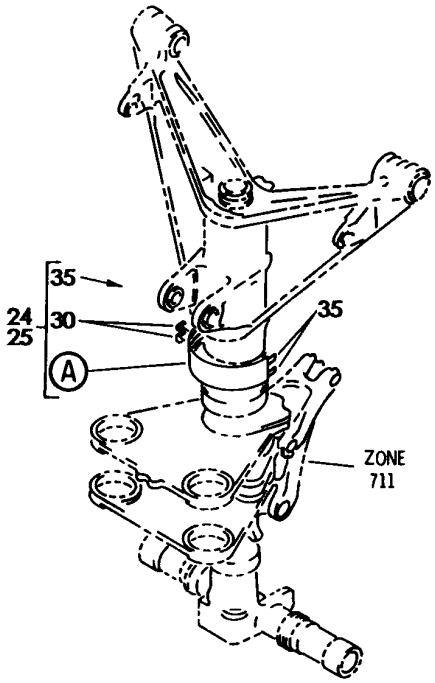

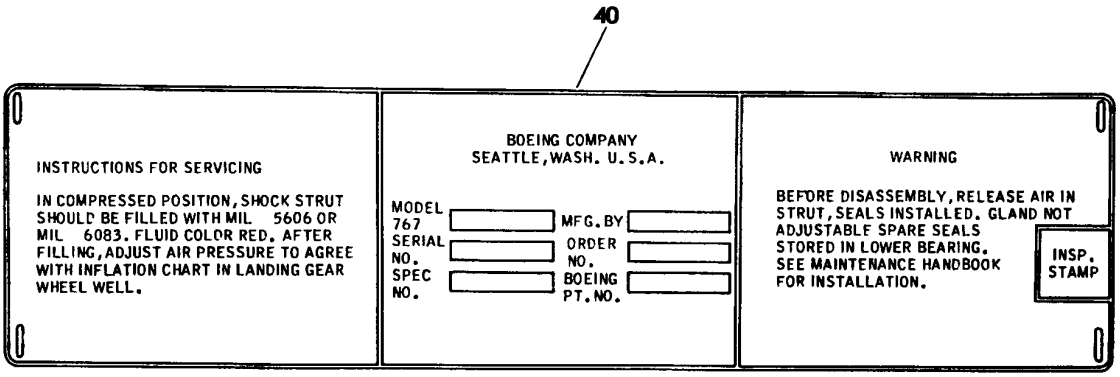

A

V 11221101 REV 205

COMPONENT ASSY-NLG (PLACARDS AND MARKINGS ONLY)
FIGURE 1

BOEING PROPRIETARY - Copyright © - Unpublished Work - See title page for details.

FIG ITEM	PART NUMBER	1 2 3 4 5 6 7 NOMENCLATURE	EFFECT FROM TO	UNITS PER ASSY
1		COMPONENT ASSY-NLG (PLACARDS AND MARKINGS ONLY)		
- 2	162T1136-004	COMPONENT ASSY-MLG (PLACARDS AND MARKINGS ONLY) MISCELLANEOUS DATA: FOR SPARES PROCURE LOWER COMPONENTS COMPONENT MAINT MANUAL REF: 32-21-47 QUALIFIED I/W DATA: 162T1136-004 OR -008 T/W 2EA 162T1621-1, 2EA 162T1622-1 AND ATTACHING HARDWARE MAY REPLACE -001 OR -004 T/W 2EA 162T1602-1, 2EA 162T1603-1, 4EA NAS6705-7, 4EA BACW10BP5APU AND 4EA BACN10JC5, FOR CUST. NOT USING TPIS WITH CUST. APPROVAL. CUSTOMER USING TPIS MUST USE 162T1136-004 OR -008. 162T1136-075,-074,-070, -068, -038, -030, -020, -017, -012, -008 OR -004 WITH QUICK DISCONNECT (QD) FEATURE IS I/W 162T1136-073, -040, -021 WITHOUT QD FEATURE AND INCLUDES IMPROVED NOSE GEAR STEERING ANGLE INDICATOR WITH CUSTOMER APPROVAL 162T1136-075,-074,-070, -068, -038, -030, -020, -017, -012, -008 OR -004 WITH QUICK DISCONNECT (QD) FEATURE IS I/W 162T1136-072,-035,-033, -022, -019, -018, -014, OR -013 WITHOUT QD FEATURE WITH CUSTOMER APPROVAL 162T1136-075,074,-070, -068,-038,-030,-020,		RF

ILLUSTRATION ITEMS NOT ON PARTS LIST ARE NOT APPLICABLE

- ITEM NOT ILLUSTRATED

BOEING PROPRIETARY - Copyright © - Unpublished Work - See title page for details.

FIG ITEM	PART NUMBER	1 2 3 4 5 6 7 NOMENCLATURE	EFFECT FROM TO	UNITS PER ASSY
1				
2		-017, -012, -008 OR -004 WITH QUICK DISCONNECT (QD) FEATURE IS CAN REPLACE AND BE REPLACED BY 162T1136-072, -035, -033, -022, -019, -018, -014 OR -013 WITHOUT (QD) FEATURE WITH CUSOTMER APPROVAL FOR NHA/OTHER SYS DET SEE: 32-21-01-01		

ILLUSTRATION ITEMS NOT ON PARTS LIST ARE NOT APPLICABLE

– ITEM NOT ILLUSTRATED

BOEING PROPRIETARY - Copyright © - Unpublished Work - See title page for details.

FIG ITEM	PART NUMBER	1 2 3 4 5 6 7 NOMENCLATURE	EFFECT FROM TO	UNITS PER ASSY
1				
- 2	162T1136-008	COMPONENT ASSY-MLG (PLACARDS AND MARKINGS ONLY) MISCELLANEOUS DATA: FOR SPARES PROCURE LOWER COMPONENTS COMPONENT MAINT MANUAL REF: 32-21-47 QUALIFIED I/W DATA: -013 MAY REPLACE -008 FOR VN221-VN230 162T1136-075,-074,-070, -068, -038, -030, -020, -017, -012, -008 OR -004 WITH QUICK DISCONNECT (QD) FEATURE IS I/W 162T1136-073, -040, -021 WITHOUT QD FEATURE AND INCLUDES IMPROVED NOSE GEAR STEERING ANGLE INDICATOR WITH CUSTOMER APPROVAL 162T1136-075,-074,-070, -068, -038, -030, -020, -017, -012, -008 OR -004 WITH QUICK DISCONNECT (QD) FEATURE IS I/W 162T1136-072,-035,-033, -022, -019, -018, -014 OR -013 WITHOUT QD FEATURE WITH CUSTOMER APPROVAL 162T1136-075,074,-070, -068,-038,-030,-020, -017, -012, -008 OR -004 WITH QUICK DISCONNECT (QD) FEATURE IS CAN REPLACE AND BE REPLACED BY 162T1136-072, -035, -033, -022, -019, -018, -014 OR -013 WITHOUT (QD) FEATURE WITH CUSOTMER APPROVAL FOR NHA/OTHER SYS DET SEE: 32-21-01-01		RF
- 2	162T1136-012	COMPONENT ASSY-MLG (PLACARDS AND MARKINGS ONLY) MISCELLANEOUS DATA:		RF

ILLUSTRATION ITEMS NOT ON PARTS LIST ARE NOT APPLICABLE

- ITEM NOT ILLUSTRATED

BOEING PROPRIETARY - Copyright © - Unpublished Work - See title page for details.

FIG ITEM	PART NUMBER	1 2 3 4 5 6 7 NOMENCLATURE	EFFECT FROM TO	UNITS PER ASSY
1				
2		FOR SPARES PROCURE LOWER COMPONENTS COMPONENT MAINT MANUAL REF: 32-21-47 QUALIFIED I/W DATA: 162T1136-075, -074, -070, -068, -038, -030, -020, -017, -012, -008 OR -004 WITH QUICK DISCONNECT (QD) FEATURE IS I/W 162T1136-072, -035, -033, -022, -019, -018, -014, OR -013 WITHOUT QD FEATURE WITH CUSTOMER APPROVAL 162T1100-38, -33 OR -30 T/W 2 EA 162T1621-1, 2 EA 162T1622-1 IS I/W 162T1100-37, -35, -21, -17, -13, -10 T/W 2 EA 162T1602-1, 2 EA 162T1603-1, 8 EA BACW10BP5APU, 4 EA NAS6705-7, 4 EA BACN10JC5 FOR CUSTOMER NOT USING TIRE PRESSURE INDICATOR SYSTEM (TPIS) WITH CUSTOMER APPROVAL 162T1136-075, -074, -070, -068, -038, -030, -020, -017, -012, -008 OR -004 WITH QUICK DISCONNECT (QD) FEATURE IS I/W 162T1136-073, -040, -021 WITHOUT QD FEATURE AND INCLUDES IMPROVED NOSE GEAR STEERING ANGLE INDICATOR WITH CUSTOMER APPROVAL 162T1136-075,074,-070, -068,-038,-030,-020, -017, -012, -008 OR -004 WITH QUICK DISCONNECT (QD) FEATURE IS CAN REPLACE AND BE REPLACED BY 162T1136-072, -035, -033, -022, -019, -018, -014 OR -013 WITHOUT		

ILLUSTRATION ITEMS NOT ON PARTS LIST ARE NOT APPLICABLE

– ITEM NOT ILLUSTRATED

BOEING PROPRIETARY - Copyright © - Unpublished Work - See title page for details.

FIG ITEM	PART NUMBER	1 2 3 4 5 6 7 NOMENCLATURE	EFFECT FROM TO	UNITS PER ASSY
1				
2		(QD) FEATURE WITH CUSOTMER APPROVAL FOR NHA/OTHER SYS DET SEE: 32-21-01-01		
- 2	162T1136-013	COMPONENT ASSY-MLG (PLACARDS AND MARKINGS ONLY) MISCELLANEOUS DATA: FOR SPARES PROCURE LOWER COMPONETS COMPONENT MAINT MANUAL REF: 32-21-47 QUALIFIED I/W DATA: 162T1136-072, -035, -033, -022, -019, -018, -014 OR -013 T/W 2 EA 162T1621-1, 2 EA 162T1622-1 WITHOUT QUICK DISCONNECT (QD) MAY REPLACE BUT NOT BE REPLACED BY 162T1136 -044, -041, -010, -006 OR -002 T/W 2 EA 162T1602-1, 2 EA 162T1603-1, 8 EA BACW10BP5APU, 4 EA NAS6705-7, 4 EA BACN10JC5 FOR CUSTOMERS NOT USING TIRE PRESSURE INDICATOR SYSTEM (TPIS) WITH CUSTOMER APPROVAL FOR NHA/OTHER SYS DET SEE: 32-21-01-01		RF

ILLUSTRATION ITEMS NOT ON PARTS LIST ARE NOT APPLICABLE

- ITEM NOT ILLUSTRATED

BOEING PROPRIETARY - Copyright © - Unpublished Work - See title page for details.

FIG ITEM	PART NUMBER	1 2 3 4 5 6 7 NOMENCLATURE	EFFECT FROM TO	UNITS PER ASSY
1				
- 2	162T1136-014	COMPONENT ASSY-MLG (PLACARDS AND MARKINGS ONLY) MISCELLANEOUS DATA: FOR SPARES PROCURE LOWER COMPONENTS COMPONENT MAINT MANUAL REF: 32-21-47 QUALIFIED I/W DATA: -013 MAY REPLACE -008 FOR VN221-VN230 162T1136-075,074,-070,-068,-038,-030,-020, -017, -012, -008 OR -004 WITH QUICK DISCONNECT (QD) FEATURE IS CAN REPLACE AND BE REPLACED BY 162T1136-072, -035, -033, -022, -019, -018, -014 OR -013 WITHOUT (QD) FEATURE WITH CUSOTMER APPROVAL FOR NHA/OTHER SYS DET SEE: 32-21-01-01		RF

ILLUSTRATION ITEMS NOT ON PARTS LIST ARE NOT APPLICABLE

- ITEM NOT ILLUSTRATED

BOEING PROPRIETARY - Copyright © - Unpublished Work - See title page for details.

FIG ITEM	PART NUMBER	1 2 3 4 5 6 7 NOMENCLATURE	EFFECT FROM TO	UNITS PER ASSY
1 - 2	162T1136-017	COMPONENT ASSY-MLG (PLACARDS AND MARKINGS ONLY) MISCELLANEOUS DATA: FOR SPARES PROCURE LOWER COMPONETS COMPONENT MAINT MANUAL REF: 32-21-47 QUALIFIED I/W DATA: 162T1136-075, -074, -070, -068, -038, -030, -020, -017, -012, -008 OR -004 WITH QUICK DISCONNECT (QD) FEATURE IS I/W 162T1136-073, -040, -021 WITHOUT QD FEATURE AND INCLUDES IMPROVED NOSE GEAR STEERING ANGLE INDICATOR WITH CUSTOMER APPROVAL 162T1136-075,-074,-070, -068,-038,-030,-020, -017,-012,-008 OR -004 WITH QUICK DISCONNECT (QD) FEATURE IS I/W 162T11336-072, -035, -033,-022,-019,-018,-014 OR -013 WITHOUT QD FEATURE WITH CUSTOMER APPROVAL OPTIONAL PART: 162T1136-030 FOR NHA/OTHER SYS DET SEE: 32-21-01-01		RF

ILLUSTRATION ITEMS NOT ON PARTS LIST ARE NOT APPLICABLE

– ITEM NOT ILLUSTRATED

BOEING PROPRIETARY - Copyright © - Unpublished Work - See title page for details.

FIG ITEM	PART NUMBER	1 2 3 4 5 6 7 NOMENCLATURE	EFFECT FROM TO	UNITS PER ASSY
1 - 2	162T1136-018	COMPONENT ASSY-MLG (PLACARDS AND MARKINGS ONLY) MISCELLANEOUS DATA: FOR SPARES PROCURE LOWER COMPONENTS COMPONENT MAINT MANUAL REF: 32-21-47 QUALIFIED I/W DATA: 162T1136-075,-074,-070, -068,-038,-030,-017, -012,-008 OR -004 WITH QUICK DISCONNECT (QD) FEATURE IS I/W 162T1136-072,-035,-033, -022,-019,-018,-014 OR -013 WITHOU QD FEATURE WITH CUSTOMER APPROVAL 162T1136-075,-074,-070, -068,-038,-030,-017, -012,-008 OR -004 WITH QUICK DISCONNECT (QD) FEATURE IS I/W 162T1136-072,-035,-033 -022,-019,-018,-014 OR -013 WITHOUT QD FEATURE WITH CUSTOMER APPROVAL 162T1136-075,-074,-070, -068,-038,-030,-017, -012,-008 OR -004 WITH QUICK DISCONNECT (QD) FEATURE IS I/W 162T1136-072,-035,-033, -022,-019,-018,-014 OR -013 WITHOUT QD FEATURE WITH CUSTOMER APPROVAL OPTIONAL PART: 162T1136-033 FOR NHA/OTHER SYS DET SEE: 32-21-01-01		RF

ILLUSTRATION ITEMS NOT ON PARTS LIST ARE NOT APPLICABLE

– ITEM NOT ILLUSTRATED

BOEING PROPRIETARY - Copyright © - Unpublished Work - See title page for details.

FIG ITEM	PART NUMBER	1 2 3 4 5 6 7 NOMENCLATURE	EFFECT FROM TO	UNITS PER ASSY
1				
- 2	162T1136-019	COMPONENT ASSY-MLG (PLACARDS AND MARKINGS ONLY) MISCELLANEOUS DATA: FOR SPARES PROCURE LOWER COMPONENTS COMPONENT MAINT MANUAL REF: 32-21-47 QUALIFIED I/W DATA: 162T1136-075,-074,-070, -068,-038,-030,-017, -012,-008 OR -004 WITH QUICK DISCONNECT (QD) FEATURE IS I/W 162T1136 -072,-035,-033,-022, -019,-018,-014 OR -013 WITHOUT QD FEATURE WITH CUSTOMER APPROVAL OPTIONAL PART: 162T1136-035 FOR NHA/OTHER SYS DET SEE: 32-21-01-01		RF
- 3	162T1136-020	COMPONENT ASSY-MLG (PLACARDS AND MARKINGS ONLY) MISCELLANEOUS DATA: FOR SPARES PROCURE LOWER COMPONENTS COMPONENT MAINT MANUAL REF: 32-21-47 QUALIFIED I/W DATA: 162T1136-075, -074, -070, -068, -038, -030, -020, -017, -012, -008 OR -004 WITH QUICK DISCONNECT (QD) FEATURE IS I/W 162T1136-073, -040, -021 WITHOUT QD FEATURE AND INCLUDES IMPROVED NOSE GEAR STEERING ANGLE INDICATOR WITH CUSTOMER APPROVAL OPTIONAL PART: 162T1136-038 FOR NHA/OTHER SYS DET SEE: 32-21-01-01		RF
- 3	162T1136-022	COMPONENT ASSY-MLG (PLACARDS AND MARKINGS ONLY)		RF

ILLUSTRATION ITEMS NOT ON PARTS LIST ARE NOT APPLICABLE

- ITEM NOT ILLUSTRATED

BOEING PROPRIETARY - Copyright © - Unpublished Work - See title page for details.

FIG ITEM	PART NUMBER	1 2 3 4 5 6 7 NOMENCLATURE	EFFECT FROM TO	UNITS PER ASSY
1		MISCELLANEOUS DATA: FOR SPARES PROCURE LOWER COMPONENTS COMPONENT MAINT MANUAL REF: 32-21-47 QUALIFIED I/W DATA: 162T1136-075,-070,-068, -038,-030,-017,-012, -008 OR -004 WITH QUICK DISCONNECT (QD) FEATURE IS I/W 162T1136-072, -035,-033,-022,-019, -018,-014 OR -013 WITHOUT QD FEATURE WITH CUSTOMER APPROVAL 162T1136-075,-070,-068, -038,-030,-017,-012, -008 OR -004 WITH QUICK DISCONNECT (QD) FEATURE IS I/W 162T1136-072, -035,-033,-022,-019, -018,-014, OR -013 WITHOUT QD FEATURE WITH CUSTOMER APPROVAL 162T1136-075,-070,-068, -038,-030,-017,-012, -008 OR -013 WITH QUICK DISCONNECT (QD) FEATURE IS I/W 162T1136-072, -035,-033,-022,-019, -018,-014 OR -013 WITHOUT QD FEATURE WITH CUSTOMER APPROVAL 162T1136-075,-070,-068, -038,-030,-017,-012, -008 OR -004 WITH QUICK DISCONNECT (QD) FEATURE IS I/W 16271136-072, -035,-033,-022,-019, -018,-014 OR -013 WITHOUT QD FEATURE WITH CUSTOMER APPROVAL 162T1136-075,-070,-068, -038,-030,-017,-012, -008 OR -004 WITH QUICK DISCONNECT (QD) FEATURE IS I/W 1621136-072, -035,-033,-022,-019, -018,-014, OR -013		

ILLUSTRATION ITEMS NOT ON PARTS LIST ARE NOT APPLICABLE

– ITEM NOT ILLUSTRATED

BOEING PROPRIETARY - Copyright © - Unpublished Work - See title page for details.

FIG ITEM	PART NUMBER	1 2 3 4 5 6 7 NOMENCLATURE	EFFECT FROM TO	UNITS PER ASSY
1				
3		WITHOUT QD FEATURE WITH CUSTOMER APPROVAL FOR NHA/OTHER SYS DET SEE: 32-21-01-01		
- 3	162T1136-030	COMPONENT ASSY-MLG (PLACARDS AND MARKINGS ONLY) MISCELLANEOUS DATA: FOR SPARES PROCURE LOWER COMPONENTS COMPONENT MAINT MANUAL REF: 32-21-47 QUALIFIED I/W DATA: 162T1136-075,-074,-070, -068,-038,-030,-020, -017,-012, -008 OR -004 WITH QUICK DISCONNECT (QD) FEATURE IS I/W 162T1136-072, -035, -033, -022, -019, -018, -014 OR -013 WITHOUT QD FEATURE WITH CUSTOMER APPROVAL FOR NHA/OTHER SYS DET SEE: 32-21-01-01		RF
- 3	162T1136-033	COMPONENT ASSY-MLG (PLACARDS AND MARKINGS ONLY) MISCELLANEOUS DATA: FOR SPARES PROCURE LOWER COMPONENTS COMPONENT MAINT MANUAL REF: 32-21-47 QUALIFIED I/W DATA: 162T1136-075,-074,-070, -068,-038,-030,-030, -017,-012,-008 OR -004 WITH QUICK DISCONNECT (QD) FEATURE IS I/W 162T1136-072, -035,-033,-022,-019, -018,-014 OR -013 WITHOUT QD FEATURE WITH CUSTOMER APPROVAL OPTIONAL PART: 162T1136-018 FOR NHA/OTHER SYS DET SEE: 32-21-01-01		RF

ILLUSTRATION ITEMS NOT ON PARTS LIST ARE NOT APPLICABLE

- ITEM NOT ILLUSTRATED

BOEING PROPRIETARY - Copyright © - Unpublished Work - See title page for details.

FIG ITEM	PART NUMBER	1 2 3 4 5 6 7 NOMENCLATURE	EFFECT FROM TO	UNITS PER ASSY
1				
- 3	162T1136-035	COMPONENT ASSY-MLG (PLACARDS AND MARKINGS ONLY) MISCELLANEOUS DATA: FOR SPARES PROCURE LOWER COMPONENTS COMPONENT MAINT MANUAL REF: 32-21-47 QUALIFIED I/W DATA: 162T1136-075,-074,-070, -068,-038,-030,-017, -012, -008 OR -004 WITH QUICK DISCONNECT (QD) FEATURE IS I/W 162T1136 -072,-035,-033,-022, -019,-018, -014 OR -013 WITHOUT QD FEATURE WITH CUSTOMER APPROVAL FOR NHA/OTHER SYS DET SEE: 32-21-01-01		RF
- 3	162T1136-038	COMPONENT ASSY-NLG (PLACARDS AND MARKINGS ONLY) MISCELLANEOUS DATA: FOR SPARES PROCURE LOWER COMPONENTS COMPONENT MAINT MANUAL REF: 32-21-47 QUALIFIED I/W DATA: 162T1136-075, -074,-070, -068,-038,-030,-020, -017,-012,-008 OR -004 WITH QUICK DISCONNECT (QD) FEATURE IS I/W 162T1136-072,-035,-033, -022,-019,-018,-014, OR -013 WITHOUT QD FEATURE WITH CUSTOMER APPROVAL FOR NHA/OTHER SYS DET SEE: 32-21-01-01		RF

ILLUSTRATION ITEMS NOT ON PARTS LIST ARE NOT APPLICABLE

- ITEM NOT ILLUSTRATED

BOEING PROPRIETARY - Copyright © - Unpublished Work - See title page for details.

FIG ITEM	PART NUMBER	1 2 3 4 5 6 7 NOMENCLATURE	EFFECT FROM TO	UNITS PER ASSY
1				
- 4	162T1136-068	COMPONENT ASSY-NLG (PLACARDS AND MARKINGS ONLY) MISCELLANEOUS DATA: FOR SPARES PROCURE LOWER COMPONENTS COMPONENT MAINT MANUAL REF: 32-21-47 QUALIFIED I/W DATA: 162T1136-075,-074,-070, -068,-038,-030,-020, -017,-012, -008 OR 004 WITH QUICK DISCONNECT (QD) FEATURE IS I/W 162T1136-072,-035,-033, -022,-019,-018,-014 OR -013 WITHOUT QD FEATURE WITH CUSTOMER APPROVAL OPTIONAL PART: 162T1136-070 FOR NHA/OTHER SYS DET SEE: 32-21-01-01		RF
- 4	162T1136-070	COMPONENT ASSY-NLG (PLACARDS AND MARKINGS ONLY) MISCELLANEOUS DATA: FOR SPARES PROCURE LOWER COMPONENTS COMPONENT MAINT MANUAL REF: 32-21-47 QUALIFIED I/W DATA: 162T1136-075,-074,-070, -068,-038,-030,-020, -017,-012, -008 OR 004 WITH QUICK DISCONNECT (QD) FEATURE IS I/W 162T1136-072, -035,-033, -022,-019,-018,-014 OR -013 WITHOUT QD FEATURE WITH CUSTOMER APPROVAL FOR NHA/OTHER SYS DET SEE: 32-21-01-01		RF

ILLUSTRATION ITEMS NOT ON PARTS LIST ARE NOT APPLICABLE

- ITEM NOT ILLUSTRATED

BOEING PROPRIETARY - Copyright © - Unpublished Work - See title page for details.

FIG ITEM	PART NUMBER	1 2 3 4 5 6 7 NOMENCLATURE	EFFECT FROM TO	UNITS PER ASSY
1				
- 4	162T1136-072	COMPONENT ASSY-NLG (PLACARDS AND MARKINGS ONLY) MISCELLANEOUS DATA: FOR SPARES PROCURE LOWER COMPONENTS COMPONENT MAINT MANUAL REF: 32-21-47 QUALIFIED I/W DATA: 162T1136-075,-074,-070, -068,-038,-030,-020, -017,-012, -008 OR 004 WITH QUICK DISCONNECT (QD) FEATURE IS I/W 162T1136-072,-035,-033, -022,-019,-018,-014 OR -013 WITHOUT QD FEATURE WITH CUSTOMER APPROVAL FOR NHA/OTHER SYS DET SEE: 32-21-01-01		RF
- 4	162T1136-074	COMPONENT ASSY-NLG (PLACARDS AND MARKINGS ONLY) MISCELLANEOUS DATA: FOR SPARES PROCURE LOWER COMPONENTS COMPONENT MAINT MANUAL REF: 32-21-47 QUALIFIED I/W DATA: 162T1136-075,-074,-070, -068,-038,-030,-020, -017,-012, -008 OR 004 WITH QUICK DISCONNECT (QD) FEATURE IS I/W 162T1136-072,-035,-033, -022,-019,-018, -014 OR -013 WITHOUT QD FEATURE WITH CUSTOMER APPROVAL FOR NHA/OTHER SYS DET SEE: 32-21-01-01		RF

ILLUSTRATION ITEMS NOT ON PARTS LIST ARE NOT APPLICABLE

- ITEM NOT ILLUSTRATED

BOEING PROPRIETARY - Copyright © - Unpublished Work - See title page for details.

FIG ITEM	PART NUMBER	1 2 3 4 5 6 7 NOMENCLATURE	EFFECT FROM TO	UNITS PER ASSY
1 - 4	162T1136-075	COMPONENT ASSY-NLG (PLACARDS AND MARKINGS ONLY) MISCELLANEOUS DATA: FOR SPARES PROCURE LOWER COMPONENTS COMPONENT MAINT MANUAL REF: 32-21-47 QUALIFIED I/W DATA: 162T1136-075,-074,-070, -068,-038,-030,-020, -017,-012, -008 OR 004 WITH QUICK DISCONNECT (QD) FEATURE IS I/W 162T1136-072,-035,-033, -022,-019,-018, -014 OR -013 WITHOUT QD FEATURE WITH CUSTOMER APPROVAL FOR NHA/OTHER SYS DET SEE: 32-21-01-01		RF

ILLUSTRATION ITEMS NOT ON PARTS LIST ARE NOT APPLICABLE

– ITEM NOT ILLUSTRATED

BOEING PROPRIETARY - Copyright © - Unpublished Work - See title page for details.

FIG ITEM	PART NUMBER	1 2 3 4 5 6 7 NOMENCLATURE	EFFECT FROM TO	UNITS PER ASSY
1				
- 4	162T1136-022	COMPONENT ASSY-MLG COMPONENT MAINT MANUAL REF: 32-21-47 QUALIFIED I/W DATA: 162T1136-075,-070,-068, -038,-030,-017,-012, -008 OR -004 WITH QUICK DISCONNECT (QD) FEATURE IS I/W 162T1136-072, -035,-033,-022,-019, -018,-014 OR -013 WITHOUT QD FEATURE WITH CUSTOMER APPROVAL 162T1136-075,-070,-068, -038,-030,-017,-012, -008 OR -004 WITH QUICK DISCONNECT (QD) FEATURE IS I/W 162T1136-072, -035,-033,-022,-019, -018,-014, OR -013 WITHOUT QD FEATURE WITH CUSTOMER APPROVAL 162T1136-072,-035,-033, -022,-019,-018,-014, OR -013 I/W 162T1136-073, -040 OR -021 WITH IMPROVED NOSE GEAR STEERING ANGLE INDICATOR WITH CUSTOMER APPROVAL 162T1136-073,-035,-033, -022,-019,-018,-014 OR -013 T/W 2 EA 162T1621-1, 2 EA 161T1622-1 WITHOUT QUICK DISCONNECT (QD) MAY REPLACE BUT NOT BE REPLACED BY 162T1136-044,-041,-010, -006 OR -002 T/W 2EA 162T1602-1, 2EA 162T1603-1, 8EA BACW10BP5APU, 4EA NAS6705-7,4EA BACN10JC5 FOR CUSTOMERS NOT USING TIRE PRESSURE INDICATOR SYSTEM (TPIS) WITH CUSTOMER APPROVAL		RF
- 4	162T1136-022	COMPONENT ASSY-MLG		RF

ILLUSTRATION ITEMS NOT ON PARTS LIST ARE NOT APPLICABLE

- ITEM NOT ILLUSTRATED

BOEING PROPRIETARY - Copyright © - Unpublished Work - See title page for details.

FIG ITEM	PART NUMBER	1 2 3 4 5 6 7 NOMENCLATURE	EFFECT FROM TO	UNITS PER ASSY
1		COMPONENT MAINT MANUAL REF: 32-21-47 QUALIFIED I/W DATA: 162T1136-073,-035,-033, -022,-019,-018,-014 OR -013 T/W 2 EA 162T1621-1, 2 EA 161T1622-1 WITHOUT QUICK DISCONNECT (QD) MAY REPLACE BUT NOT BE REPLACED BY 162T1136-044,-041,-010, -006 OR -002 T/W 2EA 162T1602-1, 2EA 162T1603-1, 8EA BACW10BP5APU, 4EA NAS6705-7,4EA BACN10JC5 FOR CUSTOMERS NOT USING TIRE PRESSURE INDICATOR SYSTEM (TPIS) WITH CUSTOMER APPROVAL 162T1136-072,-035,-033, -022,-019,-018,-014 OR -013 T/W 2EA 162T1621-1, 2 EA 162T1622-1 MAY REPLACE BUT NOT BE REPLACED BY 162T1136-042, -009,-005 OR -001 T/W 2 EA 162T1602-1, 2 EA 162T1603-1, 8 EA BACW10BP5APU, 4 EA NAS6705-7, 4EA BACN10JC5 FOR CUSTOMERS NOT USING TIRE PRESSURE INDICATOR SYSTEM (TPIS) WITH CUSTOMER APPROVAL 162T1136-072,-035,-033, -022,-019,-018,-014 OR -013 T/W 2EA 162T1621-1, 2 EA 162T1622-1 MAY REPLACE BUT NOT BE REPLACED BY 162T1136-042, -009,-005 OR -001 T/W 2 EA 162T1602-1, 2 EA 162T1603-1, 8 EA BACW10BP5APU, 4 EA NAS6705-7, 4 EA ILLUSTRATION ITEMS NOT ON PARTS LIST ARE NOT APPLICABLE		

– ITEM NOT ILLUSTRATED

BOEING PROPRIETARY - Copyright © - Unpublished Work - See title page for details.

FIG ITEM	PART NUMBER	1 2 3 4 5 6 7 NOMENCLATURE	EFFECT FROM TO	UNITS PER ASSY
1				
4		BACN10JC5 FOR CUSTOMERS NOT USING TIRE PRESSURE INDICATOR SYSTEM (TPIS) WITH CUSTOMER APPROVAL		
- 4	162T1136-022	COMPONENT ASSY-MLG COMPONENT MAINT MANUAL REF: 32-21-47 QUALIFIED I/W DATA: 162T1136-072,-035,-033, -022,-019,-018,-014 OR -013 T/W 2EA 162T1621-1, 2 EA 162T1622-1 MAY REPLACE BUT NOT BE REPLACED BY 162T1136-042, -009,-005 OR -001 T/W 2 EA 162T1602-1, 2 EA 162T1603-1, 8 EA BACW10BP5APU, 4 EA NAS6705-7, 4 EA FOR CUSTOMERS NOT USING TIRE PRESSURE INDICATOR SYSTEM (TPIS) WITH CUSTOMER APPROVAL 162T1136-072, -035,-033, -022,-019,-018,-014 OR -013 T/W 2EA 162T1621-1, 2 EA 162T1622-1 MAY REPLACE BUT NOT BE REPLACED BY 162T1136-043,-011,-007 OR -003 T/W 2 EA 162T1602-1, 2 EA 162T1603-1, 8 EA BACW10BP5APU, 4 EA NAS6705-7, 4EA BACN10JC5 INCLUDE IMPROVED NOSE GEAR STEERING ANGLE INDICATOR SYSTEM (TPIS) WITH CUSTOMER APPROVAL		RF
- 5	162T1136-012	COMPONENT ASSY-NLG COMPONENT MAINT MANUAL REF: 32-21-47		RF

ILLUSTRATION ITEMS NOT ON PARTS LIST ARE NOT APPLICABLE

- ITEM NOT ILLUSTRATED

BOEING PROPRIETARY - Copyright © - Unpublished Work - See title page for details.

FIG ITEM	PART NUMBER	1 2 3 4 5 6 7 NOMENCLATURE	EFFECT FROM TO	UNITS PER ASSY
1 - 6	162T1136-018	COMPONENT ASSY-MLG COMPONENT MAINT MANUAL REF: 32-21-47 QUALIFIED I/W DATA: 162T1136-075,-074,-070, -068,-038,-030,-017, -012,-008 OR -004 WITH QUICK DISCONNECT (QD) FEATURE IS I/W 162T1136-072,-035,-033, -022,-019,-018,-014 OR -013 WITHOU QD FEATURE WITH CUSTOMER APPROVAL 162T1136-075,-074,-070, -068,-038,-030,-017, -012,-008 OR -004 WITH QUICK DISCONNECT (QD) FEATURE IS I/W 162T1136-072,-035,-033 -022,-019,-018,-014 OR -013 WITHOUT QD FEATURE WITH CUSTOMER APPROVAL 162T1136-075,-074,-070, -068,-038,-030,-017, -012,-008 OR -004 WITH QUICK DISCONNECT (QD) FEATURE IS I/W 162T1136-072,-035,-033, -022,-019,-018,-014 OR -013 WITHOUT QD FEATURE WITH CUSTOMER APPROVAL 162T1136-072,-035,-033, -022,-019,-018,-014 OR -013 I/W 162T1136-073, -040 OR -021 WITH IMPROVED NOSE GEAR STEERING ANGLE INDICATOR WITH CUSTOMER APPROVAL		RF

ILLUSTRATION ITEMS NOT ON PARTS LIST ARE NOT APPLICABLE

– ITEM NOT ILLUSTRATED

BOEING PROPRIETARY - Copyright © - Unpublished Work - See title page for details.

FIG ITEM	PART NUMBER	1 2 3 4 5 6 7 NOMENCLATURE	EFFECT FROM TO	UNITS PER ASSY
1				
- 6	162T1136-018	COMPONENT ASSY-MLG COMPONENT MAINT MANUAL REF: 32-21-47 QUALIFIED I/W DATA: 162T1136-072,-035,-033, -022,-019,-018,-014 OR -013 T/W 2EA 162T1621-1, 2 EA 162T1622-1 WITHOUT QUICK DISCONNECT (QD) MAY REPLACE BUT NOT BE REPLACED BY 162T1136-044,-041,-010, -006 OR -002 T/W 2 EA 162T1602-1, 2 EA 162T1603-1, 8 EA BACW10BP5APU, 4 EA NAS6705-7, 4 EA BACN10JC5 FOR CUSTOMERS NOT USING TIRE PRESSURE INDICATOR SYSTEM (TPIS) WITH CUSTOMER APPROVAL		RF
- 6	162T1136-018	COMPONENT ASSY-MLG COMPONENT MAINT MANUAL REF: 32-21-47 QUALIFIED I/W DATA: 162T1136-072,-035,-033, -022,-019,-018,-014 OR -013 T/W 2EA 162T1621-1, 2 EA 162T1622-1 MAY REPLACE BUT NOT BE REPLACED BY 162T1136-042, -009, -005 OR -001 T/W 2 EA 162T1602-1, 2 EA 162T1603-1, 8 EA BAC10BP5APU, 4 EA NAS6705-7, 4EA BACN10JC5 FOR CUSTOMERS NOT USING TIRE PRESSURE INDICATOR SYSTEM (TPIS) WITH CUSTOMER APPROVAL		RF

ILLUSTRATION ITEMS NOT ON PARTS LIST ARE NOT APPLICABLE

- ITEM NOT ILLUSTRATED

BOEING PROPRIETARY - Copyright © - Unpublished Work - See title page for details.

FIG ITEM	PART NUMBER	1 2 3 4 5 6 7 NOMENCLATURE	EFFECT FROM TO	UNITS PER ASSY
1 - 7	162T1136-018	COMPONENT ASSY-MLG COMPONENT MAINT MANUAL REF: 32-21-47 QUALIFIED I/W DATA: 162T1136-072,-035,-033, -022,-019,-018,-014 OR -013 T/W 2EA 162T1621-1, 2 EA 162T1622-1 MAY REPLACE BUT NOT BE REPLACED BY 162T1136-042, -009, -005 OR -001 T/W 2 EA 162T1602-1, 2 EA 162T1603-1, 8 EA BAC10BP5APU, 4 EA NAS6705-7, 4EA BACN10JC5 FOR CUSTOMERS NOT USING TIRE PRESSURE INDICATOR SYSTEM (TPIS) WITH CUSTOMER APPROVAL 162T1136-072,-035,-033, -022,-019,-018,-014 OR -013 T/W 2EA 162T1621-1, 2 EA 162T1622-1 MAY REPLACE BUT NOT BE REPLACED BY 162T1136-043, -011, -007 OR -003 T/W 2 EA 162T1602-1, 2 EA 162T1603-1, 8 EA BACW10BP5APU, 4 EA NAS6705-7, 4EA BACN10JC5 INCLUDE IMPROVED NOSE GEAR STEERING ANGLE INDICATOR FOR CUSTOMER NOT USING TIRE PRESSURE INDICATOR SYSTEM (TPIS) WITH CUSTOMER APPROVAL		RF

ILLUSTRATION ITEMS NOT ON PARTS LIST ARE NOT APPLICABLE

– ITEM NOT ILLUSTRATED

BOEING PROPRIETARY - Copyright © - Unpublished Work - See title page for details.

FIG ITEM	PART NUMBER	1 2 3 4 5 6 7 NOMENCLATURE	EFFECT FROM TO	UNITS PER ASSY
1 - 7	162T1136-004	COMPONENT ASSY-NLG COMPONENT MAINT MANUAL REF: 32-21-47 QUALIFIED I/W DATA: 162T1136-075,-074,-070, -068, -038, -030, -020, -017, -012, -008 OR -004 WITH QUICK DISCONNECT (QD) FEATURE IS I/W 162T1136-072,-035,-033, -022, -019, -018, -014 OR -013 WITHOUT QD FEATURE WITH CUSTOMER APPROVAL		RF

ILLUSTRATION ITEMS NOT ON PARTS LIST ARE NOT APPLICABLE

– ITEM NOT ILLUSTRATED

BOEING PROPRIETARY - Copyright © - Unpublished Work - See title page for details.

FIG ITEM	PART NUMBER	1 2 3 4 5 6 7 NOMENCLATURE	EFFECT FROM TO	UNITS PER ASSY
1 - 7	162T1136-004	COMPONENT ASSY-NLG COMPONENT MAINT MANUAL REF: 32-21-47 QUALIFIED I/W DATA: 162T1136-075,-074,-070, -068, -038, -030, -020, -017, -012. -008 OR -004 T/W 2EA 162T1621-1, 2EA 162T1622-1 WITH QUICK DISCONNECT (QD) FEATURE MAY REPLACE BUT NOT BE REPLACED BY 163T1136-043, -011, -007 OR -003 T/W 2EA 162T1602-1, 2EA 162T1603-1, 8EA BACW10BP5APU, 4EA NAS6705-7, 4EA BACN10JC5 FOR CUSTOMER NOT USING TIRE PRESSURE INDICATOR SYSTEM (TPIS) WITHOUT QD FEATURE WITH IMPROVED NOSE GEAR STEERING ANGLE INDICATOR WITH CUSTOMER APPROVAL 162T1136-075,-074,-070, -068, -038, -030, -020, -017, -012, -008 OR -004 T/W 2EA 162T1621-1, 2EA 162T1622-1, MAY REPLACE BUT NOT BE REPLACED BY 162T1136-044, -041,-010, -006 OR -002 T/W 162T1602-1, 2EA 162T1603-1 8EA BACW10BP5APU, 4EA NAS6705-7, 4EA BACN10JC5 FOR CUSTOMERS NOT USING TIRE PRESSURE INDICATOR SYSTEM (TPIS) WITH CUSTOMER APPROVAL		RF

ILLUSTRATION ITEMS NOT ON PARTS LIST ARE NOT APPLICABLE

– ITEM NOT ILLUSTRATED

BOEING PROPRIETARY - Copyright © - Unpublished Work - See title page for details.

FIG ITEM	PART NUMBER	1 2 3 4 5 6 7 NOMENCLATURE	EFFECT FROM TO	UNITS PER ASSY
1				
- 7	162T1136-004	COMPONENT ASSY-NLG COMPONENT MAINT MANUAL REF: 32-21-47 QUALIFIED I/W DATA: 162T1136-075,-074,-070, -068, -038, -030, -020, -017, -012, -008 OR -004 T/W 2EA 162T1621-1, 2EA 162T1622-1, MAY REPLACE BUT NOT BE REPLACED BY 162T1136-044, -041,-010, -006 OR -002 T/W 162T1602-1, 2EA 162T1603-1 8EA BACW10BP5APU, 4EA NAS6705-7, 4EA BACN10JC5 FOR CUSTOMERS NOT USING TIRE PRESSURE INDICATOR SYSTEM (TPIS) WITH CUSTOMER APPROVAL		RF
- 8	162T1136-008	COMPONENT ASSY-NLG COMPONENT MAINT MANUAL REF: 32-21-47 QUALIFIED I/W DATA: 162T1136-075,-074,-070, -068, -038, -030, -020, -017, -012, -008 OR -004 WITH QUICK DISCONNECT (QD) FEATURE IS I/W 162T1136-072,-035,-033, -022, -019, -018, -014 OR -013 WITHOUT QD FEATURE WITH CUSTOMER APPROVAL 162T1136-075,-074,-070, -068, -038, -030, -020, -017, -012, -008 OR -004 T/W 2EA 162T1621-1, 2EA 162T1622-1 MAY REPLACE BUT NOT BE REPLACED BY 162T1136-044,-041,-010, -006 OR -002 T/W 2EA 162T1602-1, 2EA 162T1603-1, 8EA BACW10BP5APU, 4EA BACN10JC5 FOR CUSTOMERS NOT USING TIRE PRESSURE INDICATOR SYSTEM (TPIS) WITH CUSTOMER APPROVAL		RF

ILLUSTRATION ITEMS NOT ON PARTS LIST ARE NOT APPLICABLE

- ITEM NOT ILLUSTRATED

BOEING PROPRIETARY - Copyright © - Unpublished Work - See title page for details.

FIG ITEM	PART NUMBER	1 2 3 4 5 6 7 NOMENCLATURE	EFFECT FROM TO	UNITS PER ASSY
1 - 8	162T1136-008	COMPONENT ASSY-NLG COMPONENT MAINT MANUAL REF: 32-21-47 QUALIFIED I/W DATA: 162T1136-075,-074,-070, -068, -038, -030, -020, -017, -012, -008 OR -004 T/W 2EA 162T1621-1, 2EA 162T1622-1 MAY REPLACE BUT NOT BE REPLACED BY 162T1136-044,-041,-010, -006 OR -002 T/W 2EA 162T1602-1, 2EA 162T1603-1, 8EA BACW10BP5APU, 4EA BACN10JC5 FOR CUSTOMERS NOT USING TIRE PRESSURE INDICATOR SYSTEM (TPIS) WITH CUSTOMER APPROVAL 162T1136-075,-074,-070, -068, -038, -030, -020, -017, -012, -008 OR -004 T/W 162T11621-1, 2EA 162T1622-1 WITH QUICK DISCONNECT (QD) FEATURE MAY REPLACE BUT NOT BE REPLACED BY 162T1136-042, -009, -005 OR -001 T/W 2EA 162T1602-1, 2EA 162T1603-1, 8EA BACW10BP5APU 4 EA NAS6705-7, 4EA BACN10JC5 FOR CUSTOMERS NOT USING TIRE PRESSURE INDICATOR SYSTEM (TPIS) AND WITHOUT QD FEATURE WITH CUSTOMER APPROVAL		RF

ILLUSTRATION ITEMS NOT ON PARTS LIST ARE NOT APPLICABLE

– ITEM NOT ILLUSTRATED

BOEING PROPRIETARY - Copyright © - Unpublished Work - See title page for details.

FIG ITEM	PART NUMBER	1 2 3 4 5 6 7 NOMENCLATURE	EFFECT FROM TO	UNITS PER ASSY
1 - 8	162T1136-008	COMPONENT ASSY-NLG COMPONENT MAINT MANUAL REF: 32-21-47 QUALIFIED I/W DATA: 162T1136-075,-074,-070, -068, -038, -030, -020, -017, -012, -008 OR -004 T/W 2EA 162T1621-1, 2EA 162T1622-1 WITH QUICK DISCONNECT (QD) FEATURE MAY REPLACE BUT NOT BE REPLACED BY 162T1136-043, -011, -007 OR -003 T/W 2EA 162T1602-1, 2EA 162T1603-1, 8EA BACW10BP5APU, 4EA NAS6705-7, 4EA BACN10JC5 FOR CUSTOMER NOT USING TIRE PRESSURE INDICATOR SYSTEM (TPIS) WITHOUT QD FEATURE WITH IMPROVED NOSE GEAR STEERING ANGLE INDICATOR WITH CUSTOMER APPROVAL		RF

ILLUSTRATION ITEMS NOT ON PARTS LIST ARE NOT APPLICABLE

– ITEM NOT ILLUSTRATED

BOEING PROPRIETARY - Copyright © - Unpublished Work - See title page for details.

FIG ITEM	PART NUMBER	1 2 3 4 5 6 7 NOMENCLATURE	EFFECT FROM TO	UNITS PER ASSY
1 - 9	162T1136-012	COMPONENT ASSY-NLG COMPONENT MAINT MANUAL REF: 32-21-47 QUALIFIED I/W DATA: 162T1136-075, -074, -070, -068, -038, -030, -020, -017, -012, -008 OR -004 WITH QUICK DISCONNECT (QD) FEATURE IS I/W 162T1136-072, -035, -033, -022, -019, -018, -014, OR -013 WITHOUT QD FEATURE WITH CUSTOMER APPROVAL 162T1136-075,-074,-070, -068,-038,-030,-020, -017,-012,-008 OR -004 T/W 2 EA 162T1621-1, 2 EA 162T1622-1 MAY REPLACE BUT NOT BE REPLACED BY 162T1136 -044,-041,-010,-006 OR -002 T/W 2 EA 162T1602-1, 2 EA 162T1603-1, 8 EA BACW10BP5APU, 4 EA NAS6705-7, 4 EA BACN10JC5 FOR CUSTOMERS NOT USING TIRE PRESSURE INDICATOR SYSTEM (TPIS) WITH CUSTOMER APPROVAL.		RF

ILLUSTRATION ITEMS NOT ON PARTS LIST ARE NOT APPLICABLE

– ITEM NOT ILLUSTRATED

BOEING PROPRIETARY - Copyright © - Unpublished Work - See title page for details.

FIG ITEM	PART NUMBER	1 2 3 4 5 6 7 NOMENCLATURE	EFFECT FROM TO	UNITS PER ASSY
1 - 9	162T1136-012	COMPONENT ASSY-NLG COMPONENT MAINT MANUAL REF: 32-21-47 QUALIFIED I/W DATA: 162T1136-075,-074,-070, -068,-038,-030,-020, -017,-012,-008 OR -004 T/W 2 EA 162T1621-1, 2 EA 162T1622-1 MAY REPLACE BUT NOT BE REPLACED BY 162T1136 -044,-041,-010,-006 OR -002 T/W 2 EA 162T1602-1, 2 EA 162T1603-1, 8 EA BACW10BP5APU, 4 EA NAS6705-7, 4 EA BACN10JC5 FOR CUSTOMERS NOT USING TIRE PRESSURE INDICATOR SYSTEM (TPIS) WITH CUSTOMER APPROVAL. 162T1136-075,-074,-070, -068,-038,-030,-020, -017,-012,-008 OR -004 T/W 2 EA 162T1621-1, 2 EA 162T1622-1 WITH QUICK DISCONNECT (QD) FEATURE MAY REPLACE BUT NOT BE REPLACED BY 162T1136-042, -009,-005 OR -001 T/W 2 EA 162T1602-1, 2 EA 162T1603-1, 8 EA BACW10BP5APU, 4 EA NAS6705-7, 4 EA BACN10JC5 FOR CUSTOMERS NOT USING TIRE PRESSURE INDICATOR SYSTEM (TPIS) AND WITHOUT QD FEATURE WITH CUSTOMER APPROVAL		RF

ILLUSTRATION ITEMS NOT ON PARTS LIST ARE NOT APPLICABLE

– ITEM NOT ILLUSTRATED

BOEING PROPRIETARY - Copyright © - Unpublished Work - See title page for details.

FIG ITEM	PART NUMBER	1 2 3 4 5 6 7 NOMENCLATURE	EFFECT FROM TO	UNITS PER ASSY
1 - 9	162T1136-012	COMPONENT ASSY-NLG COMPONENT MAINT MANUAL REF: 32-21-47 QUALIFIED I/W DATA: 162T1136-075,-074,-070, -068,-038,-030,-020, -017,-012,-008 OR -004 T/W 2 EA 162T1621-1, 2 EA 162T1622-1 WITH QUICK DISCONNECT (QD) FEATURE MAY REPLACE BUT NOT BE REPLACED BY 162T1136-042, -009,-005 OR -001 T/W 2 EA 162T1602-1, 2 EA 162T1603-1, 8 EA BACW10BP5APU, 4 EA NAS6705-7, 4 EA BACN10JC5 FOR CUSTOMERS NOT USING TIRE PRESSURE INDICATOR SYSTEM (TPIS) AND WITHOUT QD FEATURE WITH CUSTOMER APPROVAL 162T1136-075, -074, -070, -068,-038,-030, -020,-017,-012, -008 OR -004 T/W 2 EA 162T1621-1, 2 EA 162T1622-1 WITH QUICK DISCONNECT (QD) FEATURE MAY REPLACE BUT NOT BE REPLACED BY 162T1136 -043, -011,-007 OR -003 T/W 2 EA 162T1602-1 2 EA 162T1603-1, 8 EA BACW10BP5APU, 4 EA NAS6705-7, 4 EA BACN10JC5 FOR CUSTOMER NOT USING TIRE PRESSURE INDICATOR SYSTEM (TPIS) WITHOUT QD FEATURE WITH IMPROVED NOSE GEAR STEERING ANGLE INDICATOR WITH CUSTOMER APPROVAL		RF

ILLUSTRATION ITEMS NOT ON PARTS LIST ARE NOT APPLICABLE

– ITEM NOT ILLUSTRATED

BOEING PROPRIETARY - Copyright © - Unpublished Work - See title page for details.

FIG ITEM	PART NUMBER	1 2 3 4 5 6 7 NOMENCLATURE	EFFECT FROM TO	UNITS PER ASSY
1 - 9	162T1136-013	COMPONENT ASSY-MLG COMPONENT MAINT MANUAL REF: 32-21-47 QUALIFIED I/W DATA: 162T1136-072, -035, -033, -022, -019, -018, -014 OR -013 T/W 2 EA 162T1621-1, 2 EA 162T1622-1 WITHOUT QUICK DISCONNECT (QD) MAY REPLACE BUT NOT BE REPLACED BY 162T1136 -044, -041, -010, -006 OR -002 T/W 2 EA 162T1602-1, 2 EA 162T1603-1, 8 EA BACW10BP5APU, 4 EA NAS6705-7, 4 EA BACN10JC5 FOR CUSTOMERS NOT USING TIRE PRESSURE INDICATOR SYSTEM (TPIS) WITH CUSTOMER APPROVAL 162T1136-075,-074,-070, -068,-038,-030,-020, -017,-012,-008, OR -004 WITH DISCONNECT (QD) FEATURE IS CAN REPLACE AND BE REPLACED BY 162T1136-072, -035,-033, -022,-019,-018, -014 OR -013 WITHOUT (QD) FEATURE WITH CUSTOMER APPROVAL		RF

ILLUSTRATION ITEMS NOT ON PARTS LIST ARE NOT APPLICABLE

– ITEM NOT ILLUSTRATED

BOEING PROPRIETARY - Copyright © - Unpublished Work - See title page for details.

FIG ITEM	PART NUMBER	1 2 3 4 5 6 7 NOMENCLATURE	EFFECT FROM TO	UNITS PER ASSY
1				
- 9	162T1136-013	COMPONENT ASSY-MLG COMPONENT MAINT MANUAL REF: 32-21-47 QUALIFIED I/W DATA: 162T1136-072, -035, -033, -022, -019, -018, -014 OR -013 I/W 162T1136-073, -040 OR -021 WITH IMPROVED NOSE GEAR STEERING ANGLE INDICATOR WITH CUSTOMER APPROVAL 162T1136-075,-074,-070, -068,-038,-030,-020, -017,-012,-008 OR -004 WITH DISCONNECT (QD) FEATURE IS CAN REPLACE AND BE REPLACED BY 162T1136-072, -035,-033, -022,-019,-018, -014 OR -013 WITHOUT (QD) FEATURE WITH CUSTOMER APPROVAL		RF
- 9	162T1136-013	COMPONENT ASSY-MLG COMPONENT MAINT MANUAL REF: 32-21-47 QUALIFIED I/W DATA: 162T1136-072, -035, -033, -022, -019, -018, -014 OR -013 T/W 2 EA 162T1621-1, 2 EA 162T1622-1 MAY REPLACE BUT NOT BE REPLACED BY 162T1136-042, -009, -005 OR -001 T/W 2 EA 162T1602-1, 2 EA 162T1603-1, 8 EA BACW10BP5APU, 4 EA NAS6705-7, 4 EA BACN10JC5 FOR CUSTOMERS NOT USING TIRE PRESSURE INDICATOR SYSTEM (TPIS) WITH CUSTOMER APPROVAL 162T1136-072, -035, -033, -022, -019, -018, -014 OR -013 T/W 2 EA 162T1621-1, 2 EA 162T1622-1 MAY REPLACE BUT NOT BE REPLACED BY		RF

ILLUSTRATION ITEMS NOT ON PARTS LIST ARE NOT APPLICABLE

- ITEM NOT ILLUSTRATED

BOEING PROPRIETARY - Copyright © - Unpublished Work - See title page for details.

FIG ITEM	PART NUMBER	1 2 3 4 5 6 7 NOMENCLATURE	EFFECT FROM TO	UNITS PER ASSY
1				
9		162T1136-043, -011, -007 OR -003 T/W 2 EA 162T1602-1, 2 EA 162T1603-1, 8 EA BACW10BP5APU, 4 EA NAS6705-7, 4 EA BACN10JC5 INCLUDE IMPROVED NOSE GEAR STEERING ANGLE INDICATOR FOR CUSTOMER NOT USING TIRE PRESSURE INDICATOR SYSTEM (TPIS) WITH CUSTOMER APPROVAL 162T1136-075,-074,-070, -068,-038,-030,-020, -017,-012,-008, OR -004 WITH DISCONNECT (QD) FEATURE IS CAN REPLACE AND BE REPLACED BY 162T1136-072, -035,-033, -022,-019,-018, -014 OR -013 WITHOUT (QD) FEATURE WITH CUSTOMER APPROVAL		
- 9	162T1136-013	COMPONENT ASSY-MLG COMPONENT MAINT MANUAL REF: 32-21-47 QUALIFIED I/W DATA: 162T1136-072, -035, -033, -022, -019, -018, -014 OR -013 T/W 2 EA 162T1621-1, 2 EA 162T1622-1 MAY REPLACE BUT NOT BE REPLACED BY 162T1136-043, -011, -007 OR -003 T/W 2 EA 162T1602-1, 2 EA 162T1603-1, 8 EA BACW10BP5APU, 4 EA NAS6705-7, 4 EA BACN10JC5 INCLUDE IMPROVED NOSE GEAR STEERING ANGLE INDICATOR FOR CUSTOMER NOT USING TIRE PRESSURE INDICATOR SYSTEM (TPIS) WITH CUSTOMER APPROVAL		RF

ILLUSTRATION ITEMS NOT ON PARTS LIST ARE NOT APPLICABLE

- ITEM NOT ILLUSTRATED

BOEING PROPRIETARY - Copyright © - Unpublished Work - See title page for details.

FIG ITEM	PART NUMBER	1 2 3 4 5 6 7 NOMENCLATURE	EFFECT FROM TO	UNITS PER ASSY
1 - 9	162T1136-014	COMPONENT ASSY-MLG COMPONENT MAINT MANUAL REF: 32-21-47 QUALIFIED I/W DATA: 162T1136-072,-035,-033, -022, -019, -018, -014, OR -013 I/W 162T1136-073, -040 OR -021 WITH IMPROVED NOSE GEAR STEERING ANGLE INDICATOR WITH CUSTOMER APPROVAL 162T1136-075,074,-070,-0 68,-038,-030,-020, -017, -012, -008 OR -004 WITH QUICK DISCONNECT (QD) FEATURE IS CAN REPLACE AND BE REPLACED BY 162T1136-072, -035, -033, -022, -019, -018, -014 OR -013 WITHOUT (QD) FEATURE WITH CUSOTMER APPROVAL		RF

ILLUSTRATION ITEMS NOT ON PARTS LIST ARE NOT APPLICABLE

– ITEM NOT ILLUSTRATED

BOEING PROPRIETARY - Copyright © - Unpublished Work - See title page for details.

FIG ITEM	PART NUMBER	1 2 3 4 5 6 7 NOMENCLATURE	EFFECT FROM TO	UNITS PER ASSY
1 - 9	162T1136-014	COMPONENT ASSY-MLG COMPONENT MAINT MANUAL REF: 32-21-47 QUALIFIED I/W DATA: 162T1136-072,-035,-033, -022, -019, -018, -014 OR -013 T/W 2EA 162T1621-1, 2EA 162T1622-1 WITHOUT QUICK DISCONNECT (QD) MAY REPLACE BUT NOT BE REPLACED BY 162T1136-044,-041,-010, -006 OR -002 T/W 2EA 162T1602-1, 2EA 162T1603-1, 8EA BACW10BP5APU, 4EA NAS6705-7, 4EA BACN10JC5 FOR CUSTOMERS NOT USING TIRE PRESSURE INDICATOR SYSTEM (TPIS) WITH CUSTOMER APPROVAL 162T1136-075,074,-070, -068,-038,-030,-020, -017, -012, -008 OR -004 WITH QUICK DISCONNECT (QD) FEATURE IS CAN REPLACE AND BE REPLACED BY 162T1136-072, -035, -033, -022, -019, -018, -014 OR -013 WITHOUT (QD) FEATURE WITH CUSOTMER APPROVAL		RF

ILLUSTRATION ITEMS NOT ON PARTS LIST ARE NOT APPLICABLE

– ITEM NOT ILLUSTRATED

BOEING PROPRIETARY - Copyright © - Unpublished Work - See title page for details.

FIG ITEM	PART NUMBER	1 2 3 4 5 6 7 NOMENCLATURE	EFFECT FROM TO	UNITS PER ASSY
1 - 9	162T1136-014	COMPONENT ASSY-MLG COMPONENT MAINT MANUAL REF: 32-21-47 QUALIFIED I/W DATA: 162T1136-072,-035,-033, -022, -019, -018, -014 OR -013 T/W 2EA 162T1621-1, 2EA 162T1622-1 MAY REPLACE BUT NOT BE REPLACED BY 162T1136-042, -009, -005 OR -001 T/W 2EA 162T1602-1, 2EA 162T1603-1, 8EA BACW10BP5APU, 4EA NAS6705-7, 4EA BACN10JC5 FOR CUSTOMERS NOT USING TIRE PRESSURE INDICATOR SYSTEM (TPIS) WITH CUSTOMER APPROVAL 162T1136-072,-035,-033, -022, -019, -018, -014 OR -013 T/W 2EA 162T1621-1, 2EA 162T1622-1 MAY REPLACE BUT NOT BE REPLACED BY 162T1136-043, -011, -007 OR -003 T/W 2EA 162T1602-1, 2EA 162T1603-1, 8EA BACW10BP5APU, 4EA NAS6705-7, 4EA BACN10JC5 INCLUDE IMPROVED NOSE GEAR STEERING ANGLE INDICATOR FOR CUSTOMER NOT USING TIRE PRESSURE INDICATOR SYSTEM (TPIS) WITH CUSTOMER APPROVAL		RF

ILLUSTRATION ITEMS NOT ON PARTS LIST ARE NOT APPLICABLE

– ITEM NOT ILLUSTRATED

BOEING PROPRIETARY - Copyright © - Unpublished Work - See title page for details.

FIG ITEM	PART NUMBER	1 2 3 4 5 6 7 NOMENCLATURE	EFFECT FROM TO	UNITS PER ASSY
1 - 9	162T1136-014	COMPONENT ASSY-MLG COMPONENT MAINT MANUAL REF: 32-21-47 QUALIFIED I/W DATA: 162T1136-072,-035,-033, -022, -019, -018, -014 OR -013 T/W 2EA 162T1621-1, 2EA 162T1622-1 MAY REPLACE BUT NOT BE REPLACED BY 162T1136-043, -011, -007 OR -003 T/W 2EA 162T1602-1, 2EA 162T1603-1, 8EA BACW10BP5APU, 4EA NAS6705-7, 4EA BACN10JC5 INCLUDE IMPROVED NOSE GEAR STEERING ANGLE INDICATOR FOR CUSTOMER NOT USING TIRE PRESSURE INDICATOR SYSTEM (TPIS) WITH CUSTOMER APPROVAL		RF

ILLUSTRATION ITEMS NOT ON PARTS LIST ARE NOT APPLICABLE

– ITEM NOT ILLUSTRATED

BOEING PROPRIETARY - Copyright © - Unpublished Work - See title page for details.

FIG ITEM	PART NUMBER	1 2 3 4 5 6 7 NOMENCLATURE	EFFECT FROM TO	UNITS PER ASSY
1 - 9	162T1136-017	COMPONENT ASSY-NLG COMPONENT MAINT MANUAL REF: 32-21-47 QUALIFIED I/W DATA: 162T1136-075,-074,-070, -068,-038,-030,-020, -017,-012,-008 OR -004 WITH QUICK DISCONNECT (QD) FEATURE IS I/W 162T11336-072, -035, -033,-022,-019,-018,-014 OR -013 WITHOUT QD FEATURE WITH CUSTOMER APPROVAL 162T1136-075,-074,-070, -068,-038,-030,-020, -017,-012,-008 OR -004 T/W 2 EA 162T1621-1, 2 EA 162T1622-1 MAY REPLACE BUT NOT BE REPLACED BY 162T1136-044, -041, -010,-006 OR -002 T/W 2 EA 162T1602-1, 2 EA 162T1603-1 8 EA BACW10BP5APU, 4 EA NAS6705-7, 4 EA BACN10JC5 FOR CUSTOMERS NOT USING TIRE PRESSURE INDICATOR SYSTEM (TPIS) WITH CUSTOMER APPROVAL 162T1136-075,074,-070, -068,-038,-030,-020, -017, -012, -008 OR -004 WITH QUICK DISCONNECT (QD) FEATURE IS CAN REPLACE AND BE REPLACED BY 162T1136-072, -035, -033, -022, -019, -018, -014 OR -013 WITHOUT (QD) FEATURE WITH CUSOTMER APPROVAL		RF

ILLUSTRATION ITEMS NOT ON PARTS LIST ARE NOT APPLICABLE

– ITEM NOT ILLUSTRATED

BOEING PROPRIETARY - Copyright © - Unpublished Work - See title page for details.

FIG ITEM	PART NUMBER	1 2 3 4 5 6 7 NOMENCLATURE	EFFECT FROM TO	UNITS PER ASSY
1 - 9	162T1136-017	COMPONENT ASSY-NLG COMPONENT MAINT MANUAL REF: 32-21-47 QUALIFIED I/W DATA: 162T1136-075,-074,-070, -068,-038,-030,-020, -017,-012,-008 OR -004 T/W 2 EA 162T1621-1, 2 EA 162T1622-1 MAY REPLACE BUT NOT BE REPLACED BY 162T1136-044, -041, -010,-006 OR -002 T/W 2 EA 162T1602-1, 2 EA 162T1603-1 8 EA BACW10BP5APU, 4 EA NAS6705-7, 4 EA BACN10JC5 FOR CUSTOMERS NOT USING TIRE PRESSURE INDICATOR SYSTEM (TPIS) WITH CUSTOMER APPROVAL		RF

ILLUSTRATION ITEMS NOT ON PARTS LIST ARE NOT APPLICABLE

– ITEM NOT ILLUSTRATED

BOEING PROPRIETARY - Copyright © - Unpublished Work - See title page for details.

FIG ITEM	PART NUMBER	1 2 3 4 5 6 7 NOMENCLATURE	EFFECT FROM TO	UNITS PER ASSY
1 - 9	162T1136-017	COMPONENT ASSY-NLG COMPONENT MAINT MANUAL REF: 32-21-47 QUALIFIED I/W DATA: 162T1136-075,-074,-070, -068, -038, -030, -020, -017,-012,-008 OR -004 T/W 2 EA 162T1621-1, 2 EA 162T1622-1 WITH QUICK DISCONNECT (QD) FEATURE MAY REPLACE BUT NOT BE REPLACED BY 162T1136-042,-009,-005, OR -001 T/W 2 EA 162T1602-1, 2 EA 162T1603-1, 8 EA BACW10BP5APU 4 EA NAS6705-7 4 EA BACN10JC5 FOR CUSTOMERS NOT USING TIRE PRESSURE INDICATOR SYSTEM (TPIS) AND WITHOUT QD FEATURE WITH CUSTOMER APPROVAL 162T1136-075,-074,-070, -068,-038,-030,-020, -017,-012,-008 OR -004 T/W 2 EA 162T1621-1 2 EA 162T1622-1 WITH QUICK DISCONNECT (QD) FEATURE MAY REPLACE BUT NOT BE REPLACED BY 162T1136-043, -011,-007 OR -003 T/W 2 EA 162T1602-1, 2 EA 162T1603-1, 8 EA BACW10BP5APU, 4 EA NAS6705-7, 4 EA BACN10JC5 FOR CUSTOMER NOT USING TIRE PRESSURE INDICATOR SYSTEM (TPIS) WITHOUT QD FEATURE WITH IMPROVED NOSE GEAR STEERING ANGLE INDICATOR WITH CUSTOMER APPROVAL		RF

ILLUSTRATION ITEMS NOT ON PARTS LIST ARE NOT APPLICABLE

– ITEM NOT ILLUSTRATED

BOEING PROPRIETARY - Copyright © - Unpublished Work - See title page for details.

FIG ITEM	PART NUMBER	1 2 3 4 5 6 7 NOMENCLATURE	EFFECT FROM TO	UNITS PER ASSY
1				
- 10	162T1136-017	COMPONENT ASSY-NLG COMPONENT MAINT MANUAL REF: 32-21-47 QUALIFIED I/W DATA: 162T1136-075,-074,-070, -068,-038,-030,-020, -017,-012,-008 OR -004 T/W 2 EA 162T1621-1 2 EA 162T1622-1 WITH QUICK DISCONNECT (QD) FEATURE MAY REPLACE BUT NOT BE REPLACED BY 162T1136-043, -011,-007 OR -003 T/W 2 EA 162T1602-1, 2 EA 162T1603-1, 8 EA BACW10BP5APU, 4 EA NAS6705-7, 4 EA BACN10JC5 FOR CUSTOMER NOT USING TIRE PRESSURE INDICATOR SYSTEM (TPIS) WITHOUT QD FEATURE WITH IMPROVED NOSE GEAR STEERING ANGLE INDICATOR WITH CUSTOMER APPROVAL		RF
- 10	162T1136-019	COMPONENT ASSY-MLG COMPONENT MAINT MANUAL REF: 32-21-47 QUALIFIED I/W DATA: 162T1136-075,-074,-070, -068,-038,-030,-017, -012,-008 OR -004 WITH QUICK DISCONNECT (QD) FEATURE IS I/W 162T1136 -072,-035,-033,-022, -019,-018,-014 OR -013 WITHOUT QD FEATURE WITH CUSTOMER APPROVAL 162T1136-072, -035, -033, -022, -019, -018, -014 OR -013 I/W 162T1136-073, -040 OR -021 WITH IMPROVED NOSE GEAR STEERING ANGLE INDICATOR WITH CUSTOMER APPROVAL		RF

ILLUSTRATION ITEMS NOT ON PARTS LIST ARE NOT APPLICABLE

- ITEM NOT ILLUSTRATED

BOEING PROPRIETARY - Copyright © - Unpublished Work - See title page for details.

FIG ITEM	PART NUMBER	1 2 3 4 5 6 7 NOMENCLATURE	EFFECT FROM TO	UNITS PER ASSY
1 - 10	162T1136-019	COMPONENT ASSY-MLG COMPONENT MAINT MANUAL REF: 32-21-47 QUALIFIED I/W DATA: 162T1136-072, -035, -033, -022, -019, -018, -014 OR -013 T/W 2 EA 162T1621-1, 2 EA 162T1622-1 WITHOUT QUICK DISCONNECT (QD) MAY REPLACE BUT NOT BE REPLACED BY 162T1136 -044, -041, -010, -006 OR -002 T/W 2 EA 162T1602-1, 2 EA 162T1603-1, 8 EA BACW10BP5APU, 4 EA NAS6705-7, 4 EA BACN10JC5 FOR CUSTOMERS NOT USING TIRE PRESSURE INDICATOR SYSTEM (TPIS) WITH CUSTOMER APPROVAL		RF

ILLUSTRATION ITEMS NOT ON PARTS LIST ARE NOT APPLICABLE

– ITEM NOT ILLUSTRATED

BOEING PROPRIETARY - Copyright © - Unpublished Work - See title page for details.

FIG ITEM	PART NUMBER	1 2 3 4 5 6 7 NOMENCLATURE	EFFECT FROM TO	UNITS PER ASSY
1 - 10	162T1136-019	COMPONENT ASSY-MLG COMPONENT MAINT MANUAL REF: 32-21-47 QUALIFIED I/W DATA: 162T1136-072, -035, -033, -022, -019, -018, -014 OR -013 T/W 2 EA 162T1621-1, 2 EA 162T1622-1 WITHOUT QUICK DISCONNECT (QD) MAY REPLACE BUT NOT BE REPLACED BY 162T1136 -044, -041, -010, -006 OR -002 T/W 2 EA 162T1602-1, 2 EA 162T1603-1, 8 EA BACW10BP5APU, 4 EA NAS6705-7, 4 EA BACN10JC5 FOR CUSTOMERS NOT USING TIRE PRESSURE INDICATOR SYSTEM (TPIS) WITH CUSTOMER APPROVAL 162T1136-072, -035, -033, -022, -019, -018, -014 OR -013 T/W 2 EA 162T1621-1, 2 EA 162T1622-1 MAY REPLACE BUT NOT BE REPLACED BY 162T1136-042, -009, -005 OR -001 T/W 2 EA 162T1602-1, 2 EA 162T1603-1, 8 EA BACW10BP5APU, 4 EA NAS6705-7, 4 EA BACN10JC5 FOR CUSTOMERS NOT USING TIRE PRESSURE INDICATOR SYSTEM (TPIS) WITH CUSTOMER APPROVAL		RF

ILLUSTRATION ITEMS NOT ON PARTS LIST ARE NOT APPLICABLE

– ITEM NOT ILLUSTRATED

BOEING PROPRIETARY - Copyright © - Unpublished Work - See title page for details.

FIG ITEM	PART NUMBER	1 2 3 4 5 6 7 NOMENCLATURE	EFFECT FROM TO	UNITS PER ASSY
1				
- 10	162T1136-019	COMPONENT ASSY-MLG COMPONENT MAINT MANUAL REF: 32-21-47 QUALIFIED I/W DATA: 162T1136-072, -035, -033, -022, -019, -018, -014 OR -013 T/W 2 EA 162T1621-1, 2 EA 162T1622-1 MAY REPLACE BUT NOT BE REPLACED BY 162T1136-043, -011, -007 OR -003 T/W 2 EA 162T1602-1, 2 EA 162T1603-1, 8 EA BACW10BP5APU, 4 EA NAS6705-7, 4 EA BACN10JC5 INCLUDE IMPROVED NOSE GEAR STEERING ANGLE INDICATOR FOR CUSTOMER NOT USING TIRE PRESSURE INDICATOR SYSTEM (TPIS) WITH CUSTOMER APPROVAL		RF
- 10	162T1136-020	COMPONENT ASSY-NLG COMPONENT MAINT MANUAL REF: 32-21-47 QUALIFIED I/W DATA: 162T1136-075,-074,-070, -068,-038,-030,-020, -017,-012,-008 OR -004 WITH QUICK DISCONNECT (QD) FEATURE IS I/W 162T1136-072,-035,-033, -022,-019,-018,-014 OR -013 WITHOUT QD FEATURE WITH CUSTOMER APPROVAL 162T1136-075,074,-070, -068,-038,-030,-020, -017, -012, -008 OR -004 WITH QUICK DISCONNECT (QD) FEATURE IS CAN REPLACE AND BE REPLACED BY 162T1136-072, -035, -033, -022, -019, -018, -014 OR -013 WITHOUT (QD) FEATURE WITH CUSOTMER APPROVAL		RF

ILLUSTRATION ITEMS NOT ON PARTS LIST ARE NOT APPLICABLE

- ITEM NOT ILLUSTRATED

BOEING PROPRIETARY - Copyright © - Unpublished Work - See title page for details.

FIG ITEM	PART NUMBER	1 2 3 4 5 6 7 NOMENCLATURE	EFFECT FROM TO	UNITS PER ASSY
1 - 10	162T1136-020	COMPONENT ASSY-NLG COMPONENT MAINT MANUAL REF: 32-21-47 QUALIFIED I/W DATA: 162T1136-075,-074,-070, -068,-038,-030,-020, -017,-012,-008 OR -004 T/W 2 EA 162T1621-1, 2 EA 162T1622-1 MAY REPLACE BUT NOT BE REPLACED BY 162T1136 -044,-041,-010,-006 OR -002 T/W 2 EA 162T1602-1, 2 EA 162T1603-1, 8 EA BACW10BP5APU, 4 EA NAS6705-7, 4 EA BACN10JC5 FOR CUSTOMERS NOT USING TIRE PRESSURE INDICATOR SYSTEM (TPIS) WITH CUSTOMER APPROVAL.		RF

ILLUSTRATION ITEMS NOT ON PARTS LIST ARE NOT APPLICABLE

– ITEM NOT ILLUSTRATED

BOEING PROPRIETARY - Copyright © - Unpublished Work - See title page for details.

FIG ITEM	PART NUMBER	1 2 3 4 5 6 7 NOMENCLATURE	EFFECT FROM TO	UNITS PER ASSY
1 - 10	162T1136-020	COMPONENT ASSY-NLG COMPONENT MAINT MANUAL REF: 32-21-47 QUALIFIED I/W DATA: 162T1136-075,-074,-070, -068,-038,-030,-020, -017,-012,-008 OR -004 T/W 2 EA 162T1621-1, 2 EA 162T1622-1 MAY REPLACE BUT NOT BE REPLACED BY 162T1136 -044,-041,-010,-006 OR -002 T/W 2 EA 162T1602-1, 2 EA 162T1603-1, 8 EA BACW10BP5APU, 4 EA NAS6705-7, 4 EA BACN10JC5 FOR CUSTOMERS NOT USING TIRE PRESSURE INDICATOR SYSTEM (TPIS) WITH CUSTOMER APPROVAL. 162T1136-075,-074,-070, -068,-038,-030,-020, -017,-012,-008 OR -004 T/W 2 EA 162T1621-1, 2 EA 162T1622-1 WITH QUICK DISCONNECT (QD) FEATURE MAY REPLACE BUT NOT BE REPLACED BY 162T1136-042, -009, -005, OR -001 T/W 2 EA 162T1602-1, 2 EA 162T1603-1, 8 EA BACW10BP5APU, 4 EA NAS6705-7, 4 EA BACN10JC5 FOR CUSTOMERS NOT USING TIRE PRESSURE INDICATOR SYSTEM (TPIS) AND WITHOUT QD FEATURE WITH CUSTOMER APPROVAL.		RF

ILLUSTRATION ITEMS NOT ON PARTS LIST ARE NOT APPLICABLE

– ITEM NOT ILLUSTRATED

BOEING PROPRIETARY - Copyright © - Unpublished Work - See title page for details.

FIG ITEM	PART NUMBER	1 2 3 4 5 6 7 NOMENCLATURE	EFFECT FROM TO	UNITS PER ASSY
1 - 10	162T1136-020	COMPONENT ASSY-NLG COMPONENT MAINT MANUAL REF: 32-21-47 QUALIFIED I/W DATA: 162T1136-075,-074,-070, -068,-038,-030,-020, -017,-012,-008 OR -004 T/W 2 EA 162T1621-1, 2 EA 162T1622-1 WITH QUICK DISCONNECT (QD) FEATURE MAY REPLACE BUT NOT BE REPLACED BY 162T1136-043, -011, -007 OR -003 T/W 2 EA 162T1602-1, 2 EA 162T1603-1, 8 EA BACW10BP5APU, 4 EA NAS6705-7, 4 EA BACN10JC5 FOR CUSTOMER NOT USING TIRE PRESSURE INDICATOR SYSTEM (TPIS) WITHOUT QD FEATURE WITH IMPROVED NOSE GEAR STEERING ANGLE INDICATOR WITH CUSTOMER APPROVAL		RF

ILLUSTRATION ITEMS NOT ON PARTS LIST ARE NOT APPLICABLE

– ITEM NOT ILLUSTRATED

BOEING PROPRIETARY - Copyright © - Unpublished Work - See title page for details.

FIG ITEM	PART NUMBER	1 2 3 4 5 6 7 NOMENCLATURE	EFFECT FROM TO	UNITS PER ASSY
1 - 10	162T1136-030	COMPONENT ASSY-NLG COMPONENT MAINT MANUAL REF: 32-21-47 QUALIFIED I/W DATA: 162T1136-075,-074,-070, -068,-038,-030,-020, -017,-012, -008 OR -004 WITH QUICK DISCONNECT (QD) FEATURE IS I/W 162T1136-072, -035, -033, -022, -019, -018, -014 OR -013 WITHOUT QD FEATURE WITH CUSTOMER APPROVAL 162T1136-075,-074,-070, -068,-038,-030,-020, -017,-012, -008 OR -004 WITH QUICK DISCONNECT (QD) FEATURE IS I/W 162T1136-073,-040 OR -021 WITHOUT QD FEATURE AND INCLUDES IMPROVED NOSE GEAR STEERING ANGLE INDICATOR WITH CUSTOMER APPROVAL 162T1136-075,074,-070, -068,-038,-030,-020, -017, -012, -008 OR -004 WITH QUICK DISCONNECT (QD) FEATURE IS CAN REPLACE AND BE REPLACED BY 162T1136-072, -035, -033, -022, -019, -018, -014 OR -013 WITHOUT (QD) FEATURE WITH CUSOTMER APPROVAL		RF

ILLUSTRATION ITEMS NOT ON PARTS LIST ARE NOT APPLICABLE

– ITEM NOT ILLUSTRATED

BOEING PROPRIETARY - Copyright © - Unpublished Work - See title page for details.

FIG ITEM	PART NUMBER	1 2 3 4 5 6 7 NOMENCLATURE	EFFECT FROM TO	UNITS PER ASSY
1 - 10	162T1136-030	COMPONENT ASSY-NLG COMPONENT MAINT MANUAL REF: 32-21-47 QUALIFIED I/W DATA: 162T1136-075,-074,-070, -068,-038,-030,-020, -017,-012, -008 OR -004 T/W 2 EA 162T1621-1, 2 EA 162T1622-1 MAY REPLACE BUT NOT BE REPLACED BY 162T1136 -044,-041,-010, -006 OR -002 T/W 2 EA 162T1602-1, 2 EA 162T1603-1, 8 EA BACW10BP5APU, 4 EA NAS6705-7, 4 EA BACN10JC5 FOR CUSTOMERS NOT USING TIRE PRESSURE INDICATOR SYSTEM (TPIS) WITH CUSTOMER APPROVAL		RF

ILLUSTRATION ITEMS NOT ON PARTS LIST ARE NOT APPLICABLE

– ITEM NOT ILLUSTRATED

BOEING PROPRIETARY - Copyright © - Unpublished Work - See title page for details.

FIG ITEM	PART NUMBER	1 2 3 4 5 6 7 NOMENCLATURE	EFFECT FROM TO	UNITS PER ASSY
1 - 11	162T1136-030	COMPONENT ASSY-NLG COMPONENT MAINT MANUAL REF: 32-21-47 QUALIFIED I/W DATA: 162T1136-075,-074,-070, -068,-038,-030,-020, -017,-012, -008 OR -004 T/W 2 EA 162T1621-1, 2 EA 162T1622-1 MAY REPLACE BUT NOT BE REPLACED BY 162T1136 -044,-041,-010, -006 OR -002 T/W 2 EA 162T1602-1, 2 EA 162T1603-1, 8 EA BACW10BP5APU, 4 EA NAS6705-7, 4 EA BACN10JC5 FOR CUSTOMERS NOT USING TIRE PRESSURE INDICATOR SYSTEM (TPIS) WITH CUSTOMER APPROVAL 162T1136-075,-074,-070, -068,-038,-030,-020, -017,-012, -008 OR -004 T/W 2 EA 162T1621-1, 2 EA 162T1622-1 WITH QUICK DISCONNECT (QD) FEATURE MAY REPLACE BUT NOT BE REPLACED BY 162T1136-042, -009, -005 OR -001 T/W 2 EA 162T1602-1, 2 EA 162T1603-1, 8 EA BACW10BP5APU, 4 EA NAS6705-7, 4 EA BACN10JC5 FOR CUSTOMERS NOT USING TIRE PRESSURE INDICATOR SYSTEM (TPIS) AND WITHOUT QD FEATURE WITH CUSTOMER APPROVAL		RF

ILLUSTRATION ITEMS NOT ON PARTS LIST ARE NOT APPLICABLE

– ITEM NOT ILLUSTRATED

BOEING PROPRIETARY - Copyright © - Unpublished Work - See title page for details.

FIG ITEM	PART NUMBER	1 2 3 4 5 6 7 NOMENCLATURE	EFFECT FROM TO	UNITS PER ASSY
1				
- 11	162T1136-030	COMPONENT ASSY-NLG COMPONENT MAINT MANUAL REF: 32-21-47 QUALIFIED I/W DATA: 162T1136-075,-074,-070, -068,-038,-030,-020, -017,-012, -008 OR -004 T/W 2 EA 162T1621-1, 2 EA 162T1622-1 WITH QUICK DISCONNECT (QD) FEATURE MAY REPLACE BUT NOT BE REPLACED BY 162T1136-043, -011, -007 OR -003 T/W 2 EA 162T1602-1, 2 EA 162T1603-1, 8 EA BACW10BP5APU, 4 EA NAS6705-7, 4 EA BACN10JC5 FOR CUSTOMER NOT USING TIRE PRESSURE INDICATOR SYSTEM (TPIS), WITHOUT QD FEATURE WITH IMPROVED NOSE GEAR STEERING ANGLE INDICATOR WITH CUSTOMER APPROVAL		RF
- 11	162T1136-033	COMPONENT ASSY-MLG COMPONENT MAINT MANUAL REF: 32-21-47 QUALIFIED I/W DATA: 162T1136-075,-074,-070, -068,-038,-030,-030, -017,-012,-008 OR -004 WITH QUICK DISCONNECT (QD) FEATURE IS I/W 162T1136-072, -035,-033,-022,-019, -018,-014 OR -013 WITHOUT QD FEATURE WITH CUSTOMER APPROVAL 162T1136-072, -035, -033, -022, -019, -018, -014, OR -013 I/W 162T1136-073, -040 OR -021 WITH IMPROVED NOSE GEAR STEERING ANGLE INDICATOR WITH CUSTOMER APPROVAL		RF

ILLUSTRATION ITEMS NOT ON PARTS LIST ARE NOT APPLICABLE

- ITEM NOT ILLUSTRATED

BOEING PROPRIETARY - Copyright © - Unpublished Work - See title page for details.

FIG ITEM	PART NUMBER	1 2 3 4 5 6 7 NOMENCLATURE	EFFECT FROM TO	UNITS PER ASSY
1				
- 11	162T1136-035	COMPONENT ASSY-MLG COMPONENT MAINT MANUAL REF: 32-21-47 QUALIFIED I/W DATA: 162T1136-075,-074,-070, -068,-038,-030,-017, -012, -008 OR -004 WITH QUICK DISCONNECT (QD) FEATURE IS I/W 162T1136 -072,-035,-033,-022, -019,-018, -014 OR -013 WITHOUT QD FEATURE WITH CUSTOMER APPROVAL		RF
- 11	162T1136-035	COMPONENT ASSY-MLG COMPONENT MAINT MANUAL REF: 32-21-47 QUALIFIED I/W DATA: 162T1136-072, -035, -033, -022, -019, -018, -014 OR -013 I/W 162T1136-073, -040 OR -021 WITH IMPROVED NOSE GEAR STEERING ANGLE INDICATOR WITH CUSTOMER APPROVAL 162T1136-072,-035,-033, -022,-019,-018,-014 OR -013 T/W 2 EA 162T1621-1,, 2 EA 162T1622-1 WITHOUT QUICK DISCONNECT (QD) MAY REPLACE BUT NOT BE REPLACED BY 162T1136 -044,-041,-010, -006 OR -002 T/W 2 EA 162T1602-1, 2 EA 162T1603-1, 8 EA BACW10BP5APU, 4 EA NAS6705-7, 4 EA BACN10JC5 FOR CUSTOMERS NOT USING TIRE PRESSURE INDICATOR SYSTEM (TPIS) WITH CUSTOMER APPROVAL		RF

ILLUSTRATION ITEMS NOT ON PARTS LIST ARE NOT APPLICABLE

- ITEM NOT ILLUSTRATED

BOEING PROPRIETARY - Copyright © - Unpublished Work - See title page for details.

FIG ITEM	PART NUMBER	1 2 3 4 5 6 7 NOMENCLATURE	EFFECT FROM TO	UNITS PER ASSY
1 - 11	162T1136-035	COMPONENT ASSY-MLG COMPONENT MAINT MANUAL REF: 32-21-47 QUALIFIED I/W DATA: 162T1136-072,-035,-033, -022,-019,-018,-014 OR -013 T/W 2 EA 162T1621-1,, 2 EA 162T1622-1 WITHOUT QUICK DISCONNECT (QD) MAY REPLACE BUT NOT BE REPLACED BY 162T1136 -044,-041,-010, -006 OR -002 T/W 2 EA 162T1602-1, 2 EA 162T1603-1, 8 EA BACW10BP5APU, 4 EA NAS6705-7, 4 EA BACN10JC5 FOR CUSTOMERS NOT USING TIRE PRESSURE INDICATOR SYSTEM (TPIS) WITH CUSTOMER APPROVAL 162T1136-072,-035,-033, -022,-019,-018,-014 OR -013 T/W 2 EA 162T1621-1,, 2 EA 162T1622-1 MAY REPLACE BUT NOT BE REPLACED BY 162T1136-042, -009,-005 OR -001 T/W 2 EA 162T1602-1, 2 EA 162T1603-1, 8 EA BACW10BP5APU, 4 EA NAS6705-7, 4 EA BACN10JC5 FOR CUSTOMERS NOT USING TIRE PRESSURE INDICATOR SYSTEM (TPIS) WITH CUSTOMER APPROVAL		RF

ILLUSTRATION ITEMS NOT ON PARTS LIST ARE NOT APPLICABLE

– ITEM NOT ILLUSTRATED

BOEING PROPRIETARY - Copyright © - Unpublished Work - See title page for details.

FIG ITEM	PART NUMBER	1 2 3 4 5 6 7 NOMENCLATURE	EFFECT FROM TO	UNITS PER ASSY
1 - 11	162T1136-035	COMPONENT ASSY-MLG COMPONENT MAINT MANUAL REF: 32-21-47 QUALIFIED I/W DATA: 162T1136-072,-035,-033, -022,-019,-018,-014 OR -013 T/W 2 EA 162T1621-1,, 2 EA 162T1622-1 MAY REPLACE BUT NOT BE REPLACED BY 162T1136-042, -009,-005 OR -001 T/W 2 EA 162T1602-1, 2 EA 162T1603-1, 8 EA BACW10BP5APU, 4 EA NAS6705-7, 4 EA BACN10JC5 FOR CUSTOMERS NOT USING TIRE PRESSURE INDICATOR SYSTEM (TPIS) WITH CUSTOMER APPROVAL 162T1136-072,-035,-033, -022,-019,-018,-014 OR -013 T/W 2 EA 162T1621-1,, 2 EA 162T1622-1 MAY REPLACE BUT NOT BE REPLACED BY 162T1136-043, -011,-007 OR -003 T/W 2 EA 162T1602-1, 2 EA 162T1603-1, 8 EA BACW10BP5APU, 4 EA NAS6705-7, 4 EA BACN10JC5 INCLUDE IMPROVED NOSE GEAR STEERING ANGLE INDICATOR FOR CUSTOMER NOT USING TIRE PRESSURE INDICATOR SYSTEM (TPIS) WITH CUSTOMER APPROVAL		RF

ILLUSTRATION ITEMS NOT ON PARTS LIST ARE NOT APPLICABLE

– ITEM NOT ILLUSTRATED

BOEING PROPRIETARY - Copyright © - Unpublished Work - See title page for details.

FIG ITEM	PART NUMBER	1 2 3 4 5 6 7 NOMENCLATURE	EFFECT FROM TO	UNITS PER ASSY
1 - 11	162T1136-035	COMPONENT ASSY-MLG COMPONENT MAINT MANUAL REF: 32-21-47 QUALIFIED I/W DATA: 162T1136-072,-035,-033, -022,-019,-018,-014 OR -013 T/W 2 EA 162T1621-1,, 2 EA 162T1622-1 MAY REPLACE BUT NOT BE REPLACED BY 162T1136-043, -011,-007 OR -003 T/W 2 EA 162T1602-1, 2 EA 162T1603-1, 8 EA BACW10BP5APU, 4 EA NAS6705-7, 4 EA BACN10JC5 INCLUDE IMPROVED NOSE GEAR STEERING ANGLE INDICATOR FOR CUSTOMER NOT USING TIRE PRESSURE INDICATOR SYSTEM (TPIS) WITH CUSTOMER APPROVAL		RF

ILLUSTRATION ITEMS NOT ON PARTS LIST ARE NOT APPLICABLE

– ITEM NOT ILLUSTRATED

BOEING PROPRIETARY - Copyright © - Unpublished Work - See title page for details.

FIG ITEM	PART NUMBER	1 2 3 4 5 6 7 NOMENCLATURE	EFFECT FROM TO	UNITS PER ASSY
1 - 11	162T1136-038	COMPONENT ASSY-NLG COMPONENT MAINT MANUAL REF: 32-21-47 QUALIFIED I/W DATA: 162T1136-075, -074,-070, -068,-038,-030,-020, -017,-012,-008 OR -004 WITH QUICK DISCONNECT (QD) FEATURE IS I/W 162T1136-072,-035,-033, -022,-019,-018,-014, OR -013 WITHOUT QD FEATURE WITH CUSTOMER APPROVAL 162T1136-075,-074,-070, -068,-038,-030,-020, -017,-012,-008 OR -004 QUICK DISCONNECT (QD) FEATURE IS I/W 162T1136-073,-040,-021 WITHOUT QD FEATURE AND INCLUDES IMPROVED NOSE GEAR STEERING ANGLE INDICATOR WITH CUSTOMER APPROVAL 162T1136-075,074,-070, -068,-038,-030,-020, -017, -012, -008 OR -004 WITH QUICK DISCONNECT (QD) FEATURE IS CAN REPLACE AND BE REPLACED BY 162T1136-072, -035, -033, -022, -019, -018, -014 OR -013 WITHOUT (QD) FEATURE WITH CUSOTMER APPROVAL		RF

ILLUSTRATION ITEMS NOT ON PARTS LIST ARE NOT APPLICABLE

– ITEM NOT ILLUSTRATED

BOEING PROPRIETARY - Copyright © - Unpublished Work - See title page for details.

FIG ITEM	PART NUMBER	1 2 3 4 5 6 7 NOMENCLATURE	EFFECT FROM TO	UNITS PER ASSY
1 - 11	162T1136-038	COMPONENT ASSY-NLG COMPONENT MAINT MANUAL REF: 32-21-47 QUALIFIED I/W DATA: 162T1136-075,-074,-070, -068,-038,-030,-020, -017,-012,-008 OR -004 QUICK DISCONNECT (QD) FEATURE IS I/W 162T1136-073,-040,-021 WITHOUT QD FEATURE AND INCLUDES IMPROVED NOSE GEAR STEERING ANGLE INDICATOR WITH CUSTOMER APPROVAL 162T1136-075, -074, -070,-068,-038,-030, -020,-017,-012,-008 OR -004 T/W 2 EA 162T1621-1, 2 EA 162T1622-1, MAY REPLACE BUT NOT BE REPLACED BY 162T1136-044, -041, -010, -006, OR -002 T/W 2 EA 162T1602-1, 2 EA 162T1603-1, 8 EA BACW10BP5APU, 4 EA NAS6705-7, 4 EA BACN10JC5 FOR CUSTOMER NOT USING TIRE PRESSURE INDICATOR SYSTEM (TPIS) WITH CUSTOMER APPROVAL		RF

ILLUSTRATION ITEMS NOT ON PARTS LIST ARE NOT APPLICABLE

– ITEM NOT ILLUSTRATED

BOEING PROPRIETARY - Copyright © - Unpublished Work - See title page for details.

FIG ITEM	PART NUMBER	1 2 3 4 5 6 7 NOMENCLATURE	EFFECT FROM TO	UNITS PER ASSY
1 - 11	162T1136-038	COMPONENT ASSY-NLG COMPONENT MAINT MANUAL REF: 32-21-47 QUALIFIED I/W DATA: 162T1136-075, -074, -070,-068,-038,-030, -020,-017,-012,-008 OR -004 T/W 2 EA 162T1621-1, 2 EA 162T1622-1, MAY REPLACE BUT NOT BE REPLACED BY 162T1136-044, -041, -010, -006, OR -002 T/W 2 EA 162T1602-1, 2 EA 162T1603-1, 8 EA BACW10BP5APU, 4 EA NAS6705-7, 4 EA BACN10JC5 FOR CUSTOMER NOT USING TIRE PRESSURE INDICATOR SYSTEM (TPIS) WITH CUSTOMER APPROVAL 162T1136-075,-074,-070, -068,-038,-030,-020, -017,-012,-008 OR -004 T/W 2 EA 162T1621-1, 2 EA 162T1622-1, WITH QUICK DISCONNECT (QD) FEATURE MAY REPLACE BUT NOT BE REPLACED BY 162T1136-042, -009,-005 OR -001 T/W 2 EA 162T1602-1, 2 EA 162T1603-1, 8 EA BACW10BP5APU, 4 EA NAS6705-7, 4 EA BACN10JC5 FOR CUSTOMERS NOT USING TIRE PRESSURE INDICATOR SYSTEM (TPIS) AND WITHOUT QD FEATURE WITH CUSTOMER APPROVAL		RF

ILLUSTRATION ITEMS NOT ON PARTS LIST ARE NOT APPLICABLE

– ITEM NOT ILLUSTRATED

BOEING PROPRIETARY - Copyright © - Unpublished Work - See title page for details.

FIG ITEM	PART NUMBER	1 2 3 4 5 6 7 NOMENCLATURE	EFFECT FROM TO	UNITS PER ASSY
1 - 11	162T1136-038	COMPONENT ASSY-NLG COMPONENT MAINT MANUAL REF: 32-21-47 QUALIFIED I/W DATA: 162T1136-075,-074,-070, -068,-038,-030,-020, -017,-012,-008 OR -004 T/W 2 EA 162T1621-1, 2 EA 162T1622-1 WITH QUICK DISCONNECT (QD) FEATURE MAY REPLACE BUT NOT BE REPLACED BY 162T1136-043,-011,-007 OR -003 T/W 2 EA 162T1602-1, 2 EA 162T1603-1, 8 EA BACW10BP5APU, 4 EA NAS6705-7, 4 EA BACN10JC5 FOR CUSTOMER NOT USING TIRE PRESSURE INDICATOR SYSTEM (TPIS) WITHOUT QD FEATURE, WITH IMPROVED NOSE GEAR STEERING ANGLE INDICATOR WITH CUSTOMER APPROVAL		RF

ILLUSTRATION ITEMS NOT ON PARTS LIST ARE NOT APPLICABLE

– ITEM NOT ILLUSTRATED

BOEING PROPRIETARY - Copyright © - Unpublished Work - See title page for details.

FIG ITEM	PART NUMBER	1 2 3 4 5 6 7 NOMENCLATURE	EFFECT FROM TO	UNITS PER ASSY
1 - 12	162T1136-068	COMPONENT ASSY-NLG COMPONENT MAINT MANUAL REF: 32-21-47 QUALIFIED I/W DATA: 162T1136-075,-074,-070, -068,-038,-030,-020, -017,-012, -008 OR 004 WITH QUICK DISCONNECT (QD) FEATURE IS I/W 162T1136-072,-035,-033, -022,-019,-018,-014 OR -013 WITHOUT QD FEATURE WITH CUSTOMER APPROVAL 162T1136-075,-074,-070, -068,-038,-030,-020, -017,-012, -008 OR 004 WITH QUICK DISCONNECT (QD) FEATURE IS I/W 162T1136-073, -040, -021 WITHOUT QD FEATURE AND INCLUDES IMPROVED NOSE GEAR STEERING ANGLE INDICATOR WITH CUSTOMER APPROVAL 162T1136-075,074,-070, -068,-038,-030,-020, -017, -012, -008 OR -004 WITH QUICK DISCONNECT (QD) FEATURE IS CAN REPLACE AND BE REPLACED BY 162T1136-072, -035, -033, -022, -019, -018, -014 OR -013 WITHOUT (QD) FEATURE WITH CUSOTMER APPROVAL		RF

ILLUSTRATION ITEMS NOT ON PARTS LIST ARE NOT APPLICABLE

– ITEM NOT ILLUSTRATED

BOEING PROPRIETARY - Copyright © - Unpublished Work - See title page for details.

FIG ITEM	PART NUMBER	1 2 3 4 5 6 7 NOMENCLATURE	EFFECT FROM TO	UNITS PER ASSY
1 - 12	162T1136-068	COMPONENT ASSY-NLG COMPONENT MAINT MANUAL REF: 32-21-47 QUALIFIED I/W DATA: 162T1136-075,-074,-070, -068,-038,-030,-020, -017,-012, -008 OR 004 WITH QUICK DISCONNECT (QD) FEATURE IS I/W 162T1136-073, -040, -021 WITHOUT QD FEATURE AND INCLUDES IMPROVED NOSE GEAR STEERING ANGLE INDICATOR WITH CUSTOMER APPROVAL 162T1136-075,-074,-070, -068,-038,-030,-020, -017, -008 OR -004 T/W 2 EA 162T1621-1, 2 EA 162T1622-1 MAY REPLACE BUT NOT BE REPLACED BY 162T1136 -044,-041,-010, -006 OR -002 T/W 2 EA 162T1602-1, 2 EA 162T1603-1, 8 EA BACW10BP5APU, 4 EA NAS6705-7, 4 EA BACN10JC5 FOR CUSTOMERS NOT USING TIRE PRESSURE INDICATOR SYSTEM (TPIS) WITH CUSTOMER APPROVAL		RF

ILLUSTRATION ITEMS NOT ON PARTS LIST ARE NOT APPLICABLE

– ITEM NOT ILLUSTRATED

BOEING PROPRIETARY - Copyright © - Unpublished Work - See title page for details.

FIG ITEM	PART NUMBER	1 2 3 4 5 6 7 NOMENCLATURE	EFFECT FROM TO	UNITS PER ASSY
1				
- 12	162T1136-068	COMPONENT ASSY-NLG COMPONENT MAINT MANUAL REF: 32-21-47 QUALIFIED I/W DATA: 162T1136-075,-074,-070, -068,-038,-030,-020, -017, -008 OR -004 T/W 2 EA 162T1621-1, 2 EA 162T1622-1 MAY REPLACE BUT NOT BE REPLACED BY 162T1136 -044,-041,-010, -006 OR -002 T/W 2 EA 162T1602-1, 2 EA 162T1603-1, 8 EA BACW10BP5APU, 4 EA NAS6705-7, 4 EA BACN10JC5 FOR CUSTOMERS NOT USING TIRE PRESSURE INDICATOR SYSTEM (TPIS) WITH CUSTOMER APPROVAL		RF
- 12	162T1136-068	COMPONENT ASSY-NLG COMPONENT MAINT MANUAL REF: 32-21-47 QUALIFIED I/W DATA: 162T1136-075,-074,-070, -068,-038,-030,-020, -017,-012 -008 OR -004 T/W 2 EA 162T1621-1, 2 EA 162T1622-1 WITH QUICK DISCONNECT (QD) FEATURE MAY REPLACE BUT NOT BE REPLACED BY 162T1136-042, -009, -005 OR -001 T/W 2 EA 162T1602-1, 2 EA 162T1603-1, 8 EA BACW10BP5APU, 4 EA NAS6705-7, 4 EA BACN10JC5 FOR CUSTOMERS NOT USING TIRE PRESSURE INDICATOR SYSTEM (TPIS) AND WITHOUT QD FEATURE WITH CUSTOMER APPROVAL		RF

ILLUSTRATION ITEMS NOT ON PARTS LIST ARE NOT APPLICABLE

- ITEM NOT ILLUSTRATED

BOEING PROPRIETARY - Copyright © - Unpublished Work - See title page for details.

FIG ITEM	PART NUMBER	1 2 3 4 5 6 7 NOMENCLATURE	EFFECT FROM TO	UNITS PER ASSY
1				
- 13	162T1136-068	COMPONENT ASSY-NLG COMPONENT MAINT MANUAL REF: 32-21-47 QUALIFIED I/W DATA: 162T1136-075,-074,-070, -068,-038,-030,-020, -017,-012 -008 OR -004 T/W 2 EA 162T1621-1, 2 EA 162T1622-1 WITH QUICK DISCONNECT (QD) FEATURE MAY REPLACE BUT NOT BE REPLACED BY 162T1136-042, -009, -005 OR -001 T/W 2 EA 162T1602-1, 2 EA 162T1603-1, 8 EA BACW10BP5APU, 4 EA NAS6705-7, 4 EA BACN10JC5 FOR CUSTOMERS NOT USING TIRE PRESSURE INDICATOR SYSTEM (TPIS) AND WITHOUT QD FEATURE WITH CUSTOMER APPROVAL		RF
- 13	162T1136-068	COMPONENT ASSY-NLG COMPONENT MAINT MANUAL REF: 32-21-47 QUALIFIED I/W DATA: 162T1136-075,-074,-070, -068,-038,-030,-020, -017,-012 -008 OR -004 T/W 2 EA 162T1621-1, 2 EA 162T1622-1 WITH QUICK DISCONNECT (QD) FEATURE MAY REPLACE BUT NOT BE REPLACED BY 162T1136-043, -011, -007 OR -003 T/W 2 EA 162T1602-1, 2 EA 162T1603-1, 8 EA BACW10BP5APU, 4 EA NAS6705-7, 4 EA BACN10JC5 FOR CUSTOMER NOT USING TIRE PRESSURE INDICATOR SYSTEM (TPIS), WITHOUT QD FEATURE, WITH IMPROVED NOSE GEAR STEERING ANGLE INDICATOR WITH CUSTOMER APPROVAL		RF

ILLUSTRATION ITEMS NOT ON PARTS LIST ARE NOT APPLICABLE

- ITEM NOT ILLUSTRATED

BOEING PROPRIETARY - Copyright © - Unpublished Work - See title page for details.

FIG ITEM	PART NUMBER	1 2 3 4 5 6 7 NOMENCLATURE	EFFECT FROM TO	UNITS PER ASSY
1 - 13	162T1136-068	COMPONENT ASSY-NLG COMPONENT MAINT MANUAL REF: 32-21-47 QUALIFIED I/W DATA: 162T1136-075,-074,-070, -068,-038,-030,-020, -017,-012 -008 OR -004 T/W 2 EA 162T1621-1, 2 EA 162T1622-1 WITH QUICK DISCONNECT (QD) FEATURE MAY REPLACE BUT NOT BE REPLACED BY 162T1136-043, -011, -007 OR -003 T/W 2 EA 162T1602-1, 2 EA 162T1603-1, 8 EA BACW10BP5APU, 4 EA NAS6705-7, 4 EA BACN10JC5 FOR CUSTOMER NOT USING TIRE PRESSURE INDICATOR SYSTEM (TPIS), WITHOUT QD FEATURE, WITH IMPROVED NOSE GEAR STEERING ANGLE INDICATOR WITH CUSTOMER APPROVAL		RF

ILLUSTRATION ITEMS NOT ON PARTS LIST ARE NOT APPLICABLE

– ITEM NOT ILLUSTRATED

BOEING PROPRIETARY - Copyright © - Unpublished Work - See title page for details.

FIG ITEM	PART NUMBER	1 2 3 4 5 6 7 NOMENCLATURE	EFFECT FROM TO	UNITS PER ASSY
1 - 13	162T1136-070	COMPONENT ASSY-NLG COMPONENT MAINT MANUAL REF: 32-21-47 QUALIFIED I/W DATA: 162T1136-075,-074,-070, -068,-038,-030,-020, -017,-012, -008 OR 004 WITH QUICK DISCONNECT (QD) FEATURE IS I/W 162T1136-073, -040 OR -021 WITHOUT QD FEATURE AND INCLUDES IMPROVED NOSE GEAR STEERING ANGLE INDICATOR WITH CUSTOMER APPROVAL 162T1136-075,-074,-070, -068,-038,-030,-020, -017,-012, -008 OR 004 WITH QUICK DISCONNECT (QD) FEATURE IS I/W 162T1136-072, -035,-033, -022,-019,-018,-014 OR -013 WITHOUT QD FEATURE WITH CUSTOMER APPROVAL 162T1136-075,074,-070, -068,-038,-030,-020, -017, -012, -008 OR -004 WITH QUICK DISCONNECT (QD) FEATURE IS CAN REPLACE AND BE REPLACED BY 162T1136-072, -035, -033, -022, -019, -018, -014 OR -013 WITHOUT (QD) FEATURE WITH CUSOTMER APPROVAL		RF

ILLUSTRATION ITEMS NOT ON PARTS LIST ARE NOT APPLICABLE

– ITEM NOT ILLUSTRATED

BOEING PROPRIETARY - Copyright © - Unpublished Work - See title page for details.

FIG ITEM	PART NUMBER	1 2 3 4 5 6 7 NOMENCLATURE	EFFECT FROM TO	UNITS PER ASSY
1 - 13	162T1136-070	COMPONENT ASSY-NLG COMPONENT MAINT MANUAL REF: 32-21-47 QUALIFIED I/W DATA: 162T1136-075,-074,-070, -068,-038,-030,-020, -017,-012, -008 OR 004 WITH QUICK DISCONNECT (QD) FEATURE IS I/W 162T1136-073, -040 OR -021 WITHOUT QD FEATURE AND INCLUDES IMPROVED NOSE GEAR STEERING ANGLE INDICATOR WITH CUSTOMER APPROVAL 162T1136-075,-074,-070, -068,-038,-030,-020, -017,-012, -008 OR -004 T/W 2 EA 162T1621-1, 2 EA 162T1622-1 MAY REPLACE BUT NOT BE REPLACED BY 162T1136 -044,-041,-010, -006 OR -002 T/W 2 EA 162T1602-1, 2 EA 162T1603-1, 8 EA BACW10BP5APU, 4 EA NAS6705-7, 4 EA BACN10JC5 FOR CUSTOMERS NOT USING TIRE PRESSURE INDICATOR SYSTEM (TPIS) WITH CUSTOMER APPROVAL		RF

ILLUSTRATION ITEMS NOT ON PARTS LIST ARE NOT APPLICABLE

– ITEM NOT ILLUSTRATED

BOEING PROPRIETARY - Copyright © - Unpublished Work - See title page for details.

FIG ITEM	PART NUMBER	1 2 3 4 5 6 7 NOMENCLATURE	EFFECT FROM TO	UNITS PER ASSY
1				
- 13	162T1136-070	COMPONENT ASSY-NLG COMPONENT MAINT MANUAL REF: 32-21-47 QUALIFIED I/W DATA: 162T1136-075,-074,-070, -068,-038,-030,-020, -017,-012, -008 OR -004 T/W 2 EA 162T1621-1, 2 EA 162T1622-1 MAY REPLACE BUT NOT BE REPLACED BY 162T1136 -044,-041,-010, -006 OR -002 T/W 2 EA 162T1602-1, 2 EA 162T1603-1, 8 EA BACW10BP5APU, 4 EA NAS6705-7, 4 EA BACN10JC5 FOR CUSTOMERS NOT USING TIRE PRESSURE INDICATOR SYSTEM (TPIS) WITH CUSTOMER APPROVAL		RF
- 13	162T1136-070	COMPONENT ASSY-NLG COMPONENT MAINT MANUAL REF: 32-21-47 QUALIFIED I/W DATA: 162T1136-075,-074,-070, -068,-038,-030,-020, -017,-012, -008 OR -004 T/W 2 EA 162T1621-1, 2 EA 162T1622-1 WITH QUICK DISCONNECT (QD) FEATURE MAY REPLACE BUT NOT BE REPLACED BY 162T1136-042, -009, -005 OR -001 T/W 2 EA 162T1602-1, 2 EA 162T1603-1, 8 EA BACW10BP5APU, 4 EA NAS6705-7, 4 EA BACN10JC5 FOR CUSTOMERS NOT USING TIRE PRESSURE INDICATOR SYSTEM (TPIS) AND WITHOUT QD FEATURE WITH CUSTOMER APPROVAL		RF

ILLUSTRATION ITEMS NOT ON PARTS LIST ARE NOT APPLICABLE

- ITEM NOT ILLUSTRATED

BOEING PROPRIETARY - Copyright © - Unpublished Work - See title page for details.

FIG ITEM	PART NUMBER	1 2 3 4 5 6 7 NOMENCLATURE	EFFECT FROM TO	UNITS PER ASSY
1				
- 13	162T1136-070	COMPONENT ASSY-NLG COMPONENT MAINT MANUAL REF: 32-21-47 QUALIFIED I/W DATA: 162T1136-075,-074,-070, -068,-038,-030,-020, -017,-012, -008 OR -004 T/W 2 EA 162T1621-1, 2 EA 162T1622-1 WITH QUICK DISCONNECT (QD) FEATURE MAY REPLACE BUT NOT BE REPLACED BY 162T1136-042, -009, -005 OR -001 T/W 2 EA 162T1602-1, 2 EA 162T1603-1, 8 EA BACW10BP5APU, 4 EA NAS6705-7, 4 EA BACN10JC5 FOR CUSTOMERS NOT USING TIRE PRESSURE INDICATOR SYSTEM (TPIS) AND WITHOUT QD FEATURE WITH CUSTOMER APPROVAL		RF
- 13	162T1136-070	COMPONENT ASSY-NLG COMPONENT MAINT MANUAL REF: 32-21-47 QUALIFIED I/W DATA: 162T1136-075,-074,-068, -038,-020,-017,-012, -008 OR -004 T/W 2 EA 162T1621-1, 2 EA 162T1622-1 WITH QUICK DISCONNECT (QD) FEATURE MAY REPLACE BUT NOT BE REPLACED BY 162T1136 -043,-011, -007 OR -003 T/W 2 EA 162T1602-1, 2 EA 162T1603-1, 8 EA BACW10BP5APU, 4 EA NAS6705-7, 4 EA BACN10JC5 FOR CUSTOMER NOT USING TIRE PRESSURE INDICATOR SYSTEM (TPIS) WITHOUT QD FEATURE WITH IMPROVED NOSE GEAR STEERING ANGLE INDICATOR WITH CUSTOMER APPROVAL		RF

ILLUSTRATION ITEMS NOT ON PARTS LIST ARE NOT APPLICABLE

- ITEM NOT ILLUSTRATED

BOEING PROPRIETARY - Copyright © - Unpublished Work - See title page for details.

FIG ITEM	PART NUMBER	1 2 3 4 5 6 7 NOMENCLATURE	EFFECT FROM TO	UNITS PER ASSY
1				
- 13	162T1136-070	COMPONENT ASSY-NLG COMPONENT MAINT MANUAL REF: 32-21-47 QUALIFIED I/W DATA: 162T1136-075,-074,-068, -038,-020,-017,-012, -008 OR -004 T/W 2 EA 162T1621-1, 2 EA 162T1622-1 WITH QUICK DISCONNECT (QD) FEATURE MAY REPLACE BUT NOT BE REPLACED BY 162T1136 -043,-011, -007 OR -003 T/W 2 EA 162T1602-1, 2 EA 162T1603-1, 8 EA BACW10BP5APU, 4 EA NAS6705-7, 4 EA BACN10JC5 FOR CUSTOMER NOT USING TIRE PRESSURE INDICATOR SYSTEM (TPIS) WITHOUT QD FEATURE WITH IMPROVED NOSE GEAR STEERING ANGLE INDICATOR WITH CUSTOMER APPROVAL		RF
- 13	162T1136-072	COMPONENT ASSY-MLG COMPONENT MAINT MANUAL REF: 32-21-47 QUALIFIED I/W DATA: 162T1136-075,-074,-070, -068,-038,-030,-020, -017,-012, -008 OR 004 WITH QUICK DISCONNECT (QD) FEATURE IS I/W 162T1136-072,-035,-033, -022,-019,-018,-014 OR -013 WITHOUT QD FEATURE WITH CUSTOMER APPROVAL		RF

ILLUSTRATION ITEMS NOT ON PARTS LIST ARE NOT APPLICABLE

- ITEM NOT ILLUSTRATED

BOEING PROPRIETARY - Copyright © - Unpublished Work - See title page for details.

FIG ITEM	PART NUMBER	1 2 3 4 5 6 7 NOMENCLATURE	EFFECT FROM TO	UNITS PER ASSY
1 - 13	162T1136-072	COMPONENT ASSY-MLG COMPONENT MAINT MANUAL REF: 32-21-47 QUALIFIED I/W DATA: 162T1136-072,-035,-033, -022,-019,-018,-014 OR -013 I/W 162T1136-073, -040 OR -021 WITH IMPROVED NOSE GEAR STEERING ANGLE INDICATOR WITH CUSTOMER APPROVAL 162T1136-072,-035,-033, -022,-019,-018,-014 OR -013 T/W 2 EA 162T1621-1 2 EA 162T1622-1 WITHOUT QUICK DISCONNECT (QD) MAY REPLACE BUT NOT BE REPLACED BY 162T1136 -044,-041,-010, -006 OR OR -002 T/W 2 EA 162T1602-1, 2 EA 162T1603-1, 8 EA BACW10BP5APU, 4 EA NAS6705-7, 4 EA BACN10JC5 FOR CUSTOMERS NOT USING TIRE PRESSURE INDICATOR SYSTEM (TPIS) WITH CUSTOMER APPROVAL		RF

ILLUSTRATION ITEMS NOT ON PARTS LIST ARE NOT APPLICABLE

– ITEM NOT ILLUSTRATED

BOEING PROPRIETARY - Copyright © - Unpublished Work - See title page for details.

FIG ITEM	PART NUMBER	1 2 3 4 5 6 7 NOMENCLATURE	EFFECT FROM TO	UNITS PER ASSY
1 - 13	162T1136-072	COMPONENT ASSY-MLG COMPONENT MAINT MANUAL REF: 32-21-47 QUALIFIED I/W DATA: 162T1136-072,-035,-033, -022,-019,-018,-014 OR -013 T/W 2 EA 162T1621-1 2 EA 162T1622-1 WITHOUT QUICK DISCONNECT (QD) MAY REPLACE BUT NOT BE REPLACED BY 162T1136 -044,-041,-010, -006 OR OR -002 T/W 2 EA 162T1602-1, 2 EA 162T1603-1, 8 EA BACW10BP5APU, 4 EA NAS6705-7, 4 EA BACN10JC5 FOR CUSTOMERS NOT USING TIRE PRESSURE INDICATOR SYSTEM (TPIS) WITH CUSTOMER APPROVAL		RF

ILLUSTRATION ITEMS NOT ON PARTS LIST ARE NOT APPLICABLE

– ITEM NOT ILLUSTRATED

BOEING PROPRIETARY - Copyright © - Unpublished Work - See title page for details.

FIG ITEM	PART NUMBER	1 2 3 4 5 6 7 NOMENCLATURE	EFFECT FROM TO	UNITS PER ASSY
1 - 13	162T1136-072	COMPONENT ASSY-MLG COMPONENT MAINT MANUAL REF: 32-21-47 QUALIFIED I/W DATA: 162T1136-072,-035,-033, -022,-019,-018,-014 OR -013 T/W 2 EA 162T1621-1 2 EA 162T1622-1 WITHOUT QUICK DISCONNECT (QD) MAY REPLACE BUT NOT BE REPLACED BY 162T1136 -044,-041,-010, -006 OR OR -002 T/W 2 EA 162T1602-1, 2 EA 162T1603-1, 8 EA BACW10BP5APU, 4 EA NAS6705-7, 4 EA BACN10JC5 FOR CUSTOMERS NOT USING TIRE PRESSURE INDICATOR SYSTEM (TPIS) WITH CUSTOMER APPROVAL 162T1136-072,-035,-033, -022,-019,-018,-014 OR -013 T/W 2 EA 162T1621-1 2 EA 162T1622-1 MAY REPLACE BUT NOT BE REPLACED BY 162T1136-042, -009, -005 OR -001 T/W 2 EA 162T1602-1, 2 EA 162T1603-1, 8 EA BACW10BP5APU, 4 EA NAS6705-7, 4 EA BACN10JC5 FOR CUSTOMERS NOT USING TIRE PRESSURE INDICATOR SYSTEM (TPIS) WITH CUSTOMER APPROVAL		RF

ILLUSTRATION ITEMS NOT ON PARTS LIST ARE NOT APPLICABLE

– ITEM NOT ILLUSTRATED

BOEING PROPRIETARY - Copyright © - Unpublished Work - See title page for details.

FIG ITEM	PART NUMBER	1 2 3 4 5 6 7 NOMENCLATURE	EFFECT FROM TO	UNITS PER ASSY
1 - 13	162T1136-072	COMPONENT ASSY-MLG COMPONENT MAINT MANUAL REF: 32-21-47 QUALIFIED I/W DATA: 162T1136-072,-035,-033, -022,-019,-018,-014 OR -013 T/W 2 EA 162T1621-1 2 EA 162T1622-1 MAY REPLACE BUT NOT BE REPLACED BY 162T1136-042, -009, -005 OR -001 T/W 2 EA 162T1602-1, 2 EA 162T1603-1, 8 EA BACW10BP5APU, 4 EA NAS6705-7, 4 EA BACN10JC5 FOR CUSTOMERS NOT USING TIRE PRESSURE INDICATOR SYSTEM (TPIS) WITH CUSTOMER APPROVAL 162T1136-072,-035,-033, -022,-019,-018,-014 OR -013 T/W 2 EA 162T1621-1 2 EA 162T1622-1 MAY REPLACE BUT NOT BE REPLACED BY 162T1136-043, -011, -007 OR -003 T/W 2 EA 162T1602-1, 2 EA 162T1603-1, 8 EA BACW10BP5APU, 4 EA NAS6705-7, 4 EA BACN10JC5 INCLUDE IMPROVED NOSE GEAR STEERING ANGLE INDICATOR FOR CUSTOMER NOT USING TIRE PRESSURE INDICATOR SYSTEM (TPIS) WITH CUSTOMER APPROVAL		RF

ILLUSTRATION ITEMS NOT ON PARTS LIST ARE NOT APPLICABLE

– ITEM NOT ILLUSTRATED

BOEING PROPRIETARY - Copyright © - Unpublished Work - See title page for details.

FIG ITEM	PART NUMBER	1 2 3 4 5 6 7 NOMENCLATURE	EFFECT FROM TO	UNITS PER ASSY
1				
- 13	162T1136-072	COMPONENT ASSY-MLG COMPONENT MAINT MANUAL REF: 32-21-47 QUALIFIED I/W DATA: 162T1136-072,-035,-033, -022,-019,-018,-014 OR -013 T/W 2 EA 162T1621-1 2 EA 162T1622-1 MAY REPLACE BUT NOT BE REPLACED BY 162T1136-043, -011, -007 OR -003 T/W 2 EA 162T1602-1, 2 EA 162T1603-1, 8 EA BACW10BP5APU, 4 EA NAS6705-7, 4 EA BACN10JC5 INCLUDE IMPROVED NOSE GEAR STEERING ANGLE INDICATOR FOR CUSTOMER NOT USING TIRE PRESSURE INDICATOR SYSTEM (TPIS) WITH CUSTOMER APPROVAL		RF
- 13	162T1136-072	COMPONENT ASSY-MLG COMPONENT MAINT MANUAL REF: 32-21-47 QUALIFIED I/W DATA: 162T1136-072,-035,-033, -022,-019,-018,-014 OR -013 T/W 2 EA 162T1621-1 2 EA 162T1622-1 MAY REPLACE BUT NOT BE REPLACED BY 162T1136-043, -011, -007 OR -003 T/W 2 EA 162T1602-1, 2 EA 162T1603-1, 8 EA BACW10BP5APU, 4 EA NAS6705-7, 4 EA BACN10JC5 INCLUDE IMPROVED NOSE GEAR STEERING ANGLE INDICATOR FOR CUSTOMER NOT USING TIRE PRESSURE INDICATOR SYSTEM (TPIS) WITH CUSTOMER APPROVAL		RF

ILLUSTRATION ITEMS NOT ON PARTS LIST ARE NOT APPLICABLE

- ITEM NOT ILLUSTRATED

BOEING PROPRIETARY - Copyright © - Unpublished Work - See title page for details.

FIG ITEM	PART NUMBER	1 2 3 4 5 6 7 NOMENCLATURE	EFFECT FROM TO	UNITS PER ASSY
1 - 14	162T1136-074	COMPONENT ASSY-NLG COMPONENT MAINT MANUAL REF: 32-21-47 QUALIFIED I/W DATA: 162T1136-075,-074,-070, -068,-038,-030,-020, -017,-012, -008 OR 004 WITH QUICK DISCONNECT (QD) FEATURE IS I/W 162T1136-073,-040,-021 WITHOUT QD FEATURE AND INCLUDES IMPROVED NOSE GEAR STEERING ANGLE INDICATOR WITH CUSTOMER APPROVAL 162T1136-075,-074,-070, -068,-038,-030,-020, -017,-012, -008 OR 004 WITH QUICK DISCONNECT (QD) FEATURE IS I/W 162T1136-072,-035,-033, -022,-019,-018, -014 OR -013 WITHOUT QD FEATURE WITH CUSTOMER APPROVAL 162T1136-075,074,-070, -068,-038,-030,-020, -017, -012, -008 OR -004 WITH QUICK DISCONNECT (QD) FEATURE IS CAN REPLACE AND BE REPLACED BY 162T1136-072, -035, -033, -022, -019, -018, -014 OR -013 WITHOUT (QD) FEATURE WITH CUSOTMER APPROVAL		RF

ILLUSTRATION ITEMS NOT ON PARTS LIST ARE NOT APPLICABLE

– ITEM NOT ILLUSTRATED

BOEING PROPRIETARY - Copyright © - Unpublished Work - See title page for details.

FIG ITEM	PART NUMBER	1 2 3 4 5 6 7 NOMENCLATURE	EFFECT FROM TO	UNITS PER ASSY
1 - 14	162T1136-074	COMPONENT ASSY-NLG COMPONENT MAINT MANUAL REF: 32-21-47 QUALIFIED I/W DATA: 162T1136-075,-074,-070, -068,-038,-030,-020, -017,-012, -008 OR 004 WITH QUICK DISCONNECT (QD) FEATURE IS I/W 162T1136-073,-040,-021 WITHOUT QD FEATURE AND INCLUDES IMPROVED NOSE GEAR STEERING ANGLE INDICATOR WITH CUSTOMER APPROVAL 162T1136-075,-074,-070, -068,-038,-030,-020, -017,-012, -008 OR -004 T/W 2 EA 162T1621-1, 2 EA 162T1622-1 MAY REPLACE BUT NOT BE REPLACED BY 162T1136 -044,-041,-010, -006 OR -002 T/W 2 EA 162T1602-1, 2 EA 162T1603-1, 8 EA BACW10BP5APU, 4 EA NAS6705-7, 4 EA BACN10JC5 FOR CUSTOMERS NOT USING TIRE PRESSURE INDICATOR SYSTEM (TPIS) WITH CUSTOMER APPROVAL		RF

ILLUSTRATION ITEMS NOT ON PARTS LIST ARE NOT APPLICABLE

– ITEM NOT ILLUSTRATED

BOEING PROPRIETARY - Copyright © - Unpublished Work - See title page for details.

FIG ITEM	PART NUMBER	1 2 3 4 5 6 7 NOMENCLATURE	EFFECT FROM TO	UNITS PER ASSY
1				
- 14	162T1136-074	COMPONENT ASSY-NLG COMPONENT MAINT MANUAL REF: 32-21-47 QUALIFIED I/W DATA: 162T1136-075,-074,-070, -068,-038,-030,-020, -017,-012, -008 OR -004 T/W 2 EA 162T1621-1, 2 EA 162T1622-1 MAY REPLACE BUT NOT BE REPLACED BY 162T1136 -044,-041,-010, -006 OR -002 T/W 2 EA 162T1602-1, 2 EA 162T1603-1, 8 EA BACW10BP5APU, 4 EA NAS6705-7, 4 EA BACN10JC5 FOR CUSTOMERS NOT USING TIRE PRESSURE INDICATOR SYSTEM (TPIS) WITH CUSTOMER APPROVAL		RF
- 14	162T1136-074	COMPONENT ASSY-NLG COMPONENT MAINT MANUAL REF: 32-21-47 QUALIFIED I/W DATA: 162T1136-075,-074,-070, -068,-038,-030,-020, -017,-012, -008 OR -004 T/W 2 EA 162T1621-1, 2 EA 162T1622-1 WITH QUICK DISCONNECT (QD) FEATURE MAY REPLACE BUT NOT BE REPLACED BY 162T1136-042, -009, -005 OR -001 T/W 2 EA 162T1602-1, 2 EA 162T1603-1, 8 EA BACW10BP5APU, 4 EA NAS6705-7, 4 EA BACN10JC5 FOR CUSTOMERS NOT USING TIRE PRESSURE INDICATOR SYSTEM (TPIS) AND WITHOUT QD FEATURE WITH CUSTOMER APPROVAL		RF

ILLUSTRATION ITEMS NOT ON PARTS LIST ARE NOT APPLICABLE

- ITEM NOT ILLUSTRATED

BOEING PROPRIETARY - Copyright © - Unpublished Work - See title page for details.

FIG ITEM	PART NUMBER	1 2 3 4 5 6 7 NOMENCLATURE	EFFECT FROM TO	UNITS PER ASSY
1				
- 14	162T1136-074	COMPONENT ASSY-NLG COMPONENT MAINT MANUAL REF: 32-21-47 QUALIFIED I/W DATA: 162T1136-075,-074,-070, -068,-038,-030,-020, -017,-012, -008 OR -004 T/W 2 EA 162T1621-1, 2 EA 162T1622-1 WITH QUICK DISCONNECT (QD) FEATURE MAY REPLACE BUT NOT BE REPLACED BY 162T1136-042, -009, -005 OR -001 T/W 2 EA 162T1602-1, 2 EA 162T1603-1, 8 EA BACW10BP5APU, 4 EA NAS6705-7, 4 EA BACN10JC5 FOR CUSTOMERS NOT USING TIRE PRESSURE INDICATOR SYSTEM (TPIS) AND WITHOUT QD FEATURE WITH CUSTOMER APPROVAL		RF
- 14	162T1136-074	COMPONENT ASSY-NLG COMPONENT MAINT MANUAL REF: 32-21-47 QUALIFIED I/W DATA: 162T1136-075,-074,-068, -038,-030,-020,-017, -012, -008 OR -004 T/W 2 EA 162T1621-1, 2 EA 162T1622-1 WITH QUICK DISCONNECT (QD) FEATURE MAY REPLACE BUT NOT BE REPLACED BY 162T1136-043, -011, -007 OR -003 T/W 2 EA 162T1602-1, 2 EA 162T1603-1, 8 EA BACW10BP5APU, 4 EA NAS6705-7, 4 EA BACN10JC5 FOR CUSTOMER NOT USING TIRE PRESSURE INDICATOR SYSTEM (TPIS) WITHOUT QD FEATURE, WITH IMPROVED NOSE GEAR STEERING ANGLE INDICATOR WITH CUSTOMER APPROVAL		RF

ILLUSTRATION ITEMS NOT ON PARTS LIST ARE NOT APPLICABLE

- ITEM NOT ILLUSTRATED

BOEING PROPRIETARY - Copyright © - Unpublished Work - See title page for details.

FIG ITEM	PART NUMBER	1 2 3 4 5 6 7 NOMENCLATURE	EFFECT FROM TO	UNITS PER ASSY
1 - 14	162T1136-074	COMPONENT ASSY-NLG COMPONENT MAINT MANUAL REF: 32-21-47 QUALIFIED I/W DATA: 162T1136-075,-074,-068, -038,-030,-020,-017, -012, -008 OR -004 T/W 2 EA 162T1621-1, 2 EA 162T1622-1 WITH QUICK DISCONNECT (QD) FEATURE MAY REPLACE BUT NOT BE REPLACED BY 162T1136-043, -011, -007 OR -003 T/W 2 EA 162T1602-1, 2 EA 162T1603-1, 8 EA BACW10BP5APU, 4 EA NAS6705-7, 4 EA BACN10JC5 FOR CUSTOMER NOT USING TIRE PRESSURE INDICATOR SYSTEM (TPIS) WITHOUT QD FEATURE, WITH IMPROVED NOSE GEAR STEERING ANGLE INDICATOR WITH CUSTOMER APPROVAL		RF

ILLUSTRATION ITEMS NOT ON PARTS LIST ARE NOT APPLICABLE

– ITEM NOT ILLUSTRATED

BOEING PROPRIETARY - Copyright © - Unpublished Work - See title page for details.

FIG ITEM	PART NUMBER	1 2 3 4 5 6 7 NOMENCLATURE	EFFECT FROM TO	UNITS PER ASSY
1 - 14	162T1136-075	COMPONENT ASSY-NLG COMPONENT MAINT MANUAL REF: 32-21-47 QUALIFIED I/W DATA: 162T1136-075,-074,-070, -068,-038,-030,-020, -017,-012, -008 OR 004 WITH QUICK DISCONNECT (QD) FEATURE IS I/W 162T1136-073,-040,-021 WITHOUT QD FEATURE AND INCLUDES IMPROVED NOSE GEAR STEERING ANGLE INDICATOR WITH CUSTOMER APPROVAL 162T1136-075,-074,-070, -068,-038,-030,-020, -017,-012, -008 OR 004 WITH QUICK DISCONNECT (QD) FEATURE IS I/W 162T1136-072,-035,-033, -022,-019,-018, -014 OR -013 WITHOUT QD FEATURE WITH CUSTOMER APPROVAL 162T1136-075,074,-070, -068,-038,-030,-020, -017, -012, -008 OR -004 WITH QUICK DISCONNECT (QD) FEATURE IS CAN REPLACE AND BE REPLACED BY 162T1136-072, -035, -033, -022, -019, -018, -014 OR -013 WITHOUT (QD) FEATURE WITH CUSOTMER APPROVAL		RF

ILLUSTRATION ITEMS NOT ON PARTS LIST ARE NOT APPLICABLE

– ITEM NOT ILLUSTRATED

BOEING PROPRIETARY - Copyright © - Unpublished Work - See title page for details.

FIG ITEM	PART NUMBER	1 2 3 4 5 6 7 NOMENCLATURE	EFFECT FROM TO	UNITS PER ASSY
1 - 14	162T1136-075	COMPONENT ASSY-NLG COMPONENT MAINT MANUAL REF: 32-21-47 QUALIFIED I/W DATA: 162T1136-075,-074,-070, -068,-038,-030,-020, -017,-012, -008 OR 004 WITH QUICK DISCONNECT (QD) FEATURE IS I/W 162T1136-073,-040,-021 WITHOUT QD FEATURE AND INCLUDES IMPROVED NOSE GEAR STEERING ANGLE INDICATOR WITH CUSTOMER APPROVAL 162T1136-075,-074,-070, -068,-038,-030,-020, -017,-012, -008 OR -004 T/W 2 EA 162T1621-1, 2 EA 162T1622-1 MAY REPLACE BUT NOT BE REPLACED BY 162T1136 -044,-041,-010, -006 OR -002 T/W 2 EA 162T1602-1, 2 EA 162T1603-1, 8 EA BACW10BP5APU, 4 EA NAS6705-7, 4 EA BACN10JC5 FOR CUSTOMERS NOT USING TIRE PRESSURE INDICATOR SYSTEM (TPIS) WITH CUSTOMER APPROVAL		RF

ILLUSTRATION ITEMS NOT ON PARTS LIST ARE NOT APPLICABLE

– ITEM NOT ILLUSTRATED

BOEING PROPRIETARY - Copyright © - Unpublished Work - See title page for details.

FIG ITEM	PART NUMBER	1 2 3 4 5 6 7 NOMENCLATURE	EFFECT FROM TO	UNITS PER ASSY
1				
- 14	162T1136-075	COMPONENT ASSY-NLG COMPONENT MAINT MANUAL REF: 32-21-47 QUALIFIED I/W DATA: 162T1136-075,-074,-070, -068,-038,-030,-020, -017,-012, -008 OR -004 T/W 2 EA 162T1621-1, 2 EA 162T1622-1 MAY REPLACE BUT NOT BE REPLACED BY 162T1136 -044,-041,-010, -006 OR -002 T/W 2 EA 162T1602-1, 2 EA 162T1603-1, 8 EA BACW10BP5APU, 4 EA NAS6705-7, 4 EA BACN10JC5 FOR CUSTOMERS NOT USING TIRE PRESSURE INDICATOR SYSTEM (TPIS) WITH CUSTOMER APPROVAL		RF
- 15	162T1136-075	COMPONENT ASSY-NLG COMPONENT MAINT MANUAL REF: 32-21-47 QUALIFIED I/W DATA: 162T1136-075,-074,-070, -068,-038,-030,-020, -017,-012, -008 OR -004 T/W 2 EA 162T1621-1, 2 EA 162T1622-1 WITH QUICK DISCONNECT (QD) FEATURE MAY REPLACE BUT NOT BE REPLACED BY 162T1136-042, -009, -005 OR -001 T/W 2 EA 162T1602-1, 2 EA 162T1603-1, 8 EA BACW10BP5APU, 4 EA NAS6705-7, 4 EA BACN10JC5 FOR CUSTOMERS NOT USING TIRE PRESSURE INDICATOR SYSTEM (TPIS) AND WITHOUT QD FEATURE WITH CUSTOMER APPROVAL		RF

ILLUSTRATION ITEMS NOT ON PARTS LIST ARE NOT APPLICABLE

- ITEM NOT ILLUSTRATED

BOEING PROPRIETARY - Copyright © - Unpublished Work - See title page for details.

FIG ITEM	PART NUMBER	1 2 3 4 5 6 7 NOMENCLATURE	EFFECT FROM TO	UNITS PER ASSY
1				
- 15	162T1136-075	COMPONENT ASSY-NLG COMPONENT MAINT MANUAL REF: 32-21-47 QUALIFIED I/W DATA: 162T1136-075,-074,-070, -068,-038,-030,-020, -017,-012, -008 OR -004 T/W 2 EA 162T1621-1, 2 EA 162T1622-1 WITH QUICK DISCONNECT (QD) FEATURE MAY REPLACE BUT NOT BE REPLACED BY 162T1136-042, -009, -005 OR -001 T/W 2 EA 162T1602-1, 2 EA 162T1603-1, 8 EA BACW10BP5APU, 4 EA NAS6705-7, 4 EA BACN10JC5 FOR CUSTOMERS NOT USING TIRE PRESSURE INDICATOR SYSTEM (TPIS) AND WITHOUT QD FEATURE WITH CUSTOMER APPROVAL		RF
- 15	162T1136-075	COMPONENT ASSY-NLG COMPONENT MAINT MANUAL REF: 32-21-47 QUALIFIED I/W DATA: 162T1136-075,-074,-070, -068,-038,-030,-020, -017,-012, -008 OR -004 T/W 2 EA 162T1621-1, 2 EA 162T1622-1 WITH QUICK DISCONNECT (QD) FEATURE MAY REPLACE BUT NOT BE REPLACED BY 162T1136-043, -011, -007 OR -003 T/W 2 EA 162T1602-1, 2 EA 162T1603-1, 8 EA BACW10BP5APU, 4 EA NAS6705-7, 4 EA BACN10JC5 FOR CUSTOMER NOT USING TIRE PRESSURE INDICATOR SYSTEM (TPIS) WITHOUT QD FEATURE, WITH IMPROVED NOSE GEAR STEERING ANGLE INDICATOR WITH CUSTOMER APPROVAL		RF

ILLUSTRATION ITEMS NOT ON PARTS LIST ARE NOT APPLICABLE

- ITEM NOT ILLUSTRATED

BOEING PROPRIETARY - Copyright © - Unpublished Work - See title page for details.

FIG ITEM	PART NUMBER	1 2 3 4 5 6 7 NOMENCLATURE	EFFECT FROM TO	UNITS PER ASSY
1				
- 15	162T1136-075	COMPONENT ASSY-NLG COMPONENT MAINT MANUAL REF: 32-21-47 QUALIFIED I/W DATA: 162T1136-075,-074,-070, -068,-038,-030,-020, -017,-012, -008 OR -004 T/W 2 EA 162T1621-1, 2 EA 162T1622-1 WITH QUICK DISCONNECT (QD) FEATURE MAY REPLACE BUT NOT BE REPLACED BY 162T1136-043, -011, -007 OR -003 T/W 2 EA 162T1602-1, 2 EA 162T1603-1, 8 EA BACW10BP5APU, 4 EA NAS6705-7, 4 EA BACN10JC5 FOR CUSTOMER NOT USING TIRE PRESSURE INDICATOR SYSTEM (TPIS) WITHOUT QD FEATURE, WITH IMPROVED NOSE GEAR STEERING ANGLE INDICATOR WITH CUSTOMER APPROVAL		RF
24	162T1136-051	.STRUT ASSY-SHOCK MISCELLANEOUS DATA: FOR SPARES PROCURE LOWER COMPONENTS QUALIFIED I/W DATA: 162T1136-051 /TW 2EA 162T1621-1, 2EA 162T1622-1 AND ATTACHING HARDWARE MAY REPLACE -050 OR -054 T/W 2EA 162T1602-1, 2EA 162T1603-1, 4EA NAS6705-7, 4EA BACW10BP5APU AND 4EA BACN10JC5, FOR CUST. NOT USING TPIS WITH CUST. APPROVAL. CUST. USING TPIS MUST USE 162T1136-051		1

ILLUSTRATION ITEMS NOT ON PARTS LIST ARE NOT APPLICABLE

- ITEM NOT ILLUSTRATED

BOEING PROPRIETARY - Copyright © - Unpublished Work - See title page for details.

FIG ITEM	PART NUMBER	1 2 3 4 5 6 7 NOMENCLATURE	EFFECT FROM TO	UNITS PER ASSY
1				
24	162T1136-053	.STRUT ASSY-SHOCK		1
		MISCELLANEOUS DATA:		
		FOR SPARES PROCURE LOWER		
		COMPONENTS		
		QUALIFIED I/W DATA:		
		162T1136-051 T/W 2EA		
		162T1621-1, 2EA		
		162T1622-1 AND ATTACHING		
		HARDWARE MAY REPLACE		
		-050 OR -054 T/W 2EA		
		162T1602-1, 2EA		
		162T1603-1, 4EA		
		NAS6705-7, 4EA		
		BACW10BP5APU AND 4EA		
		BACN10JC5, FOR CUST.		
		NOT USING TPIS WITH		
		CUST. APPROVAL.		
		CUST. USING TPIS MUST		
		USE 162T1136-051		
24	162T1136-056	.STRUT ASSY-SHOCK		1
		MISCELLANEOUS DATA:		
		FOR SPARES PROCURE LOWER		
		COMPONENTS		
24	162T1136-064	.STRUT ASSY-SHOCK	155162	1
30	44PB134-4441	..SEAL-		2
		SUPPLIER CODE:		
		V00266		
		SPECIFICATION NUMBER:		
		BACS11AK2		
35	BACS38E8-25	..STRAP		2
40	162T1103-1	..NAMEPLATE-		1
40	162T1103-2	..NAMEPLATE-		1

ILLUSTRATION ITEMS NOT ON PARTS LIST ARE NOT APPLICABLE

— ITEM NOT ILLUSTRATED

BOEING PROPRIETARY - Copyright © - Unpublished Work - See title page for details.

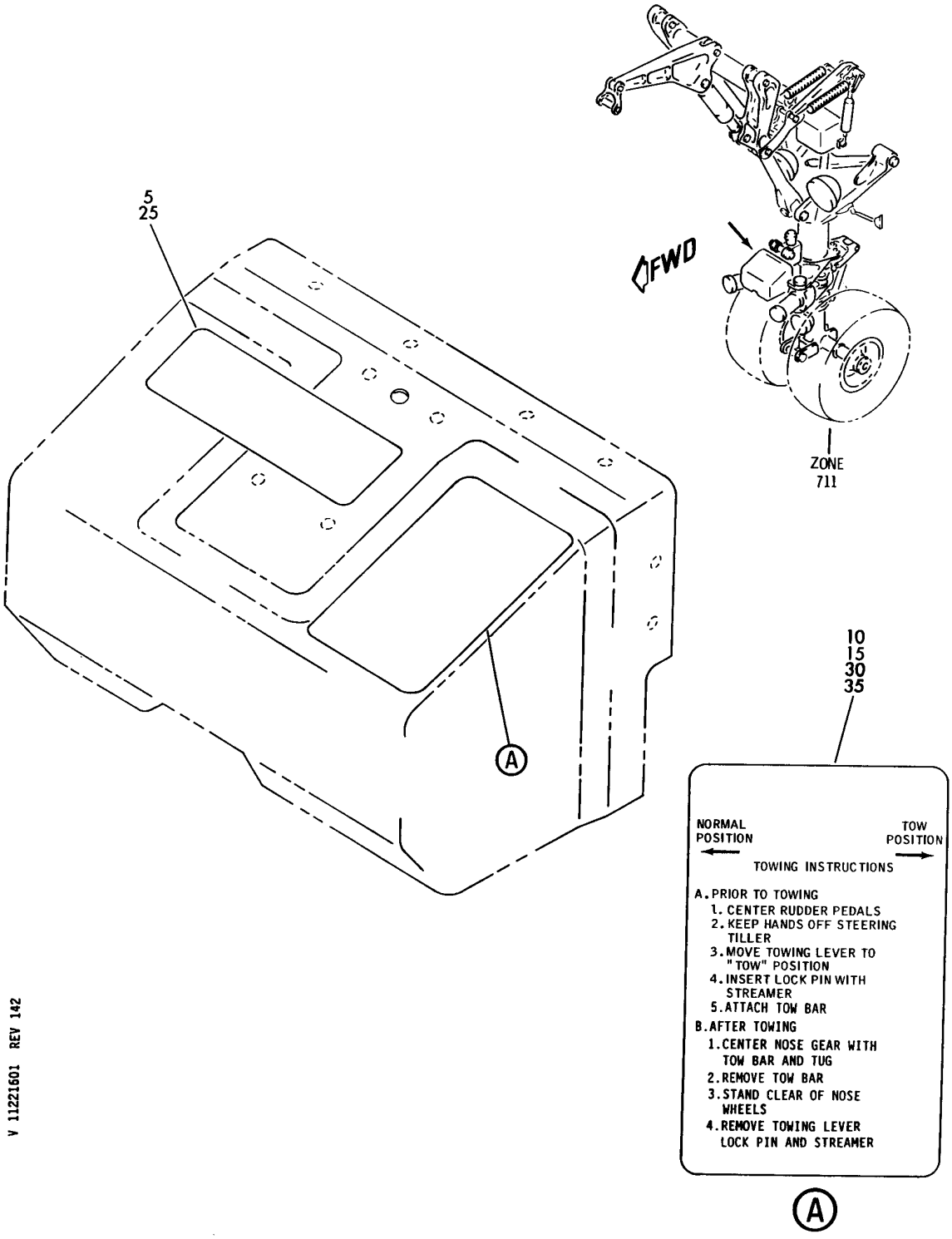

COVER ASSY-NOSE WHL STEERING SUMMING MECH
FIGURE 1

BOEING PROPRIETARY - Copyright © - Unpublished Work - See title page for details.

FIG ITEM	PART NUMBER	1 2 3 4 5 6 7 NOMENCLATURE	EFFECT FROM TO	UNITS PER ASSY
1		COVER ASSY-NOSE WHL STEERING SUMMING MECH		
- 1	257T4404-3	COVER ASSY-NOSE WHL STEERING SUMMING MECH COMPONENT MAINT MANUAL REF: 32-21-21 OPTIONAL PART: 257T4404-5 FOR NHA SEE: 32-51-04-01		RF
- 1	257T4404-5	COVER ASSY-NOSE WHL STEERING SUMMING MECH COMPONENT MAINT MANUAL REF: 32-21-21 OPTIONAL PART: 257T4404-3 FOR NHA SEE: 32-51-04-01		RF
- 1	257T4404-8	COVER ASSY-NOSE WHL STEERING SUMMING MECH COMPONENT MAINT MANUAL REF: 32-21-21		RF
5	BAC27TCT0010	.MARKER-ALUMINUM FOIL- PLACARD CONTENT: NO STEP		1
10	BAC27TCT0151	.DECAL- USED ON: 257T4404-3		1
15	BAC27TCT0449	.MARKER-ALUMINUM FOIL USED ON: 257T4404-8 USED ON: 257T4404-5		1

ILLUSTRATION ITEMS NOT ON PARTS LIST ARE NOT APPLICABLE

- ITEM NOT ILLUSTRATED

BOEING PROPRIETARY - Copyright © - Unpublished Work - See title page for details.

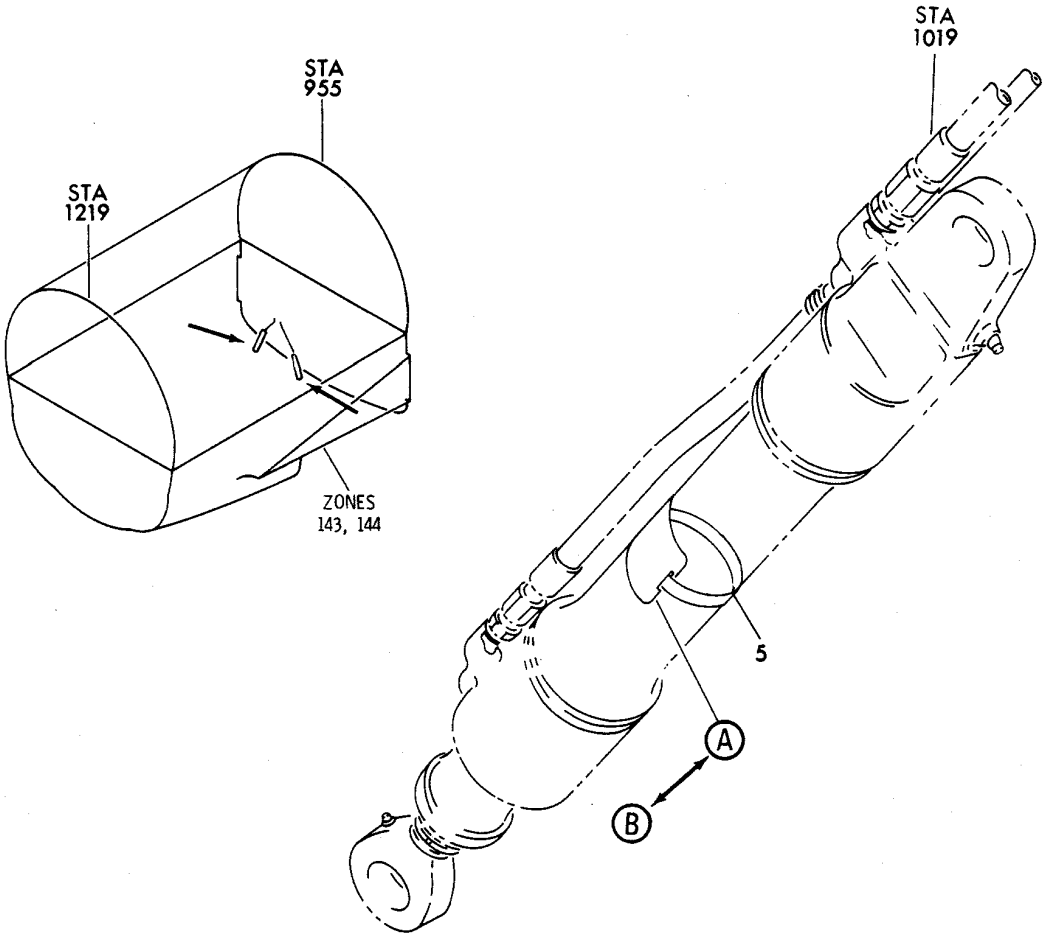

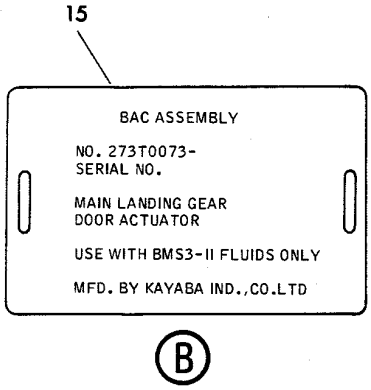

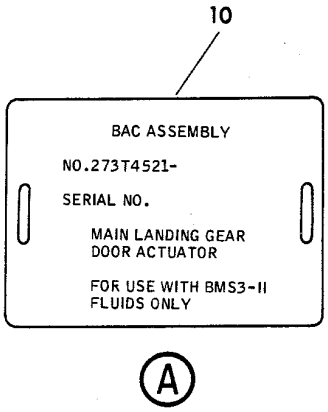

V 11221701 REV 337

ACTUATOR ASSY-MLG DOOR (PLACARDS AND MARKINGS ONLY)
FIGURE 1

BOEING PROPRIETARY - Copyright © - Unpublished Work - See title page for details.

FIG ITEM	PART NUMBER	1 2 3 4 5 6 7 NOMENCLATURE	EFFECT FROM TO	UNITS PER ASSY
1		ACTUATOR ASSY-MLG DOOR (PLACARDS AND MARKINGS ONLY)		
- 1	273T0073-1	ACTUATOR ASSY-MLG DOOR (PLACARDS AND MARKINGS ONLY) MISCELLANEOUS DATA: FOR SPARES PROCURE LOWER COMPONENTS FOR NHA/OTHER SYS DET SEE: 32-32-12-01		RF
5	273T0050-1	.STRAP-NAMEPLATE		1
5	273T0083-1	.STRAP-NAMEPLATE		1
10	BAC27THY0039	.NAMEPLATE-		1
15	BAC27THY0147	.NAMEPLATE-		1

ILLUSTRATION ITEMS NOT ON PARTS LIST ARE NOT APPLICABLE

- ITEM NOT ILLUSTRATED

BOEING PROPRIETARY - Copyright © - Unpublished Work - See title page for details.

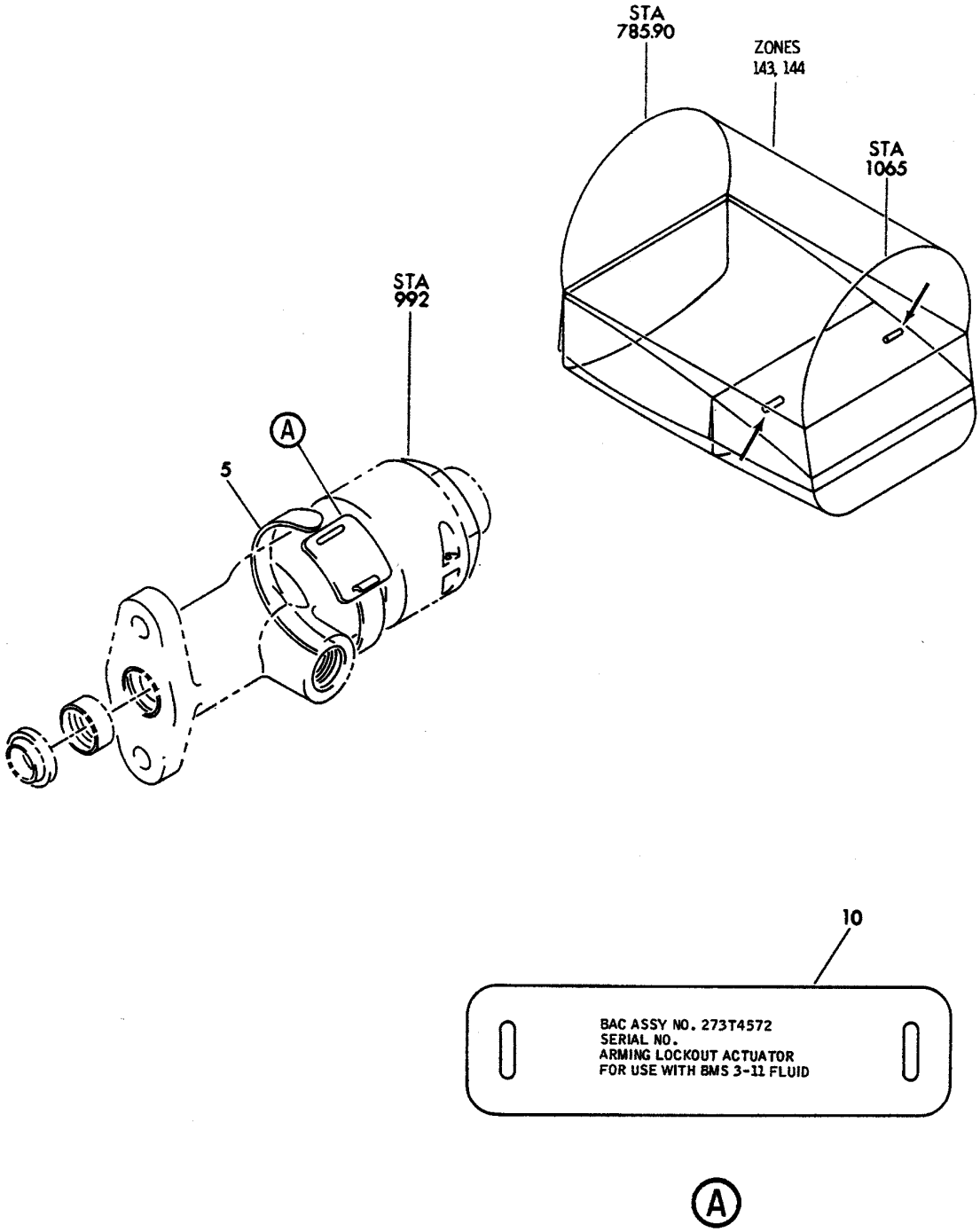

V 11221705 REV 225

ACTUATOR ASSY-MLG DOOR ARMING LOCKOUT (PLACARDS AND MARKINGS ONLY)
FIGURE 5

BOEING PROPRIETARY - Copyright © - Unpublished Work - See title page for details.

FIG ITEM	PART NUMBER	1 2 3 4 5 6 7 NOMENCLATURE	EFFECT FROM TO	UNITS PER ASSY
5				
		ACTUATOR ASSY-MLG DOOR ARMING LOCKOUT (PLACARDS AND MARKINGS ONLY)		
- 1	273T4572-1	ACTUATOR ASSY-MLG DOOR ARMING LOCKOUT (PLACARDS AND MARKINGS ONLY)		RF
		MISCELLANEOUS DATA: FOR SPARES PROCURE LOWER COMPONENTS		
		COMPONENT MAINT MANUAL REF: 32-32-15		
		FOR NHA/OTHER SYS DET SEE: 32-35-02-01		
5	69B80300-15	.STRAP-NAMEPLATE		1
10	BAC27THY20	.NAMEPLATE		1

ILLUSTRATION ITEMS NOT ON PARTS LIST ARE NOT APPLICABLE

- ITEM NOT ILLUSTRATED

BOEING PROPRIETARY - Copyright © - Unpublished Work - See title page for details.

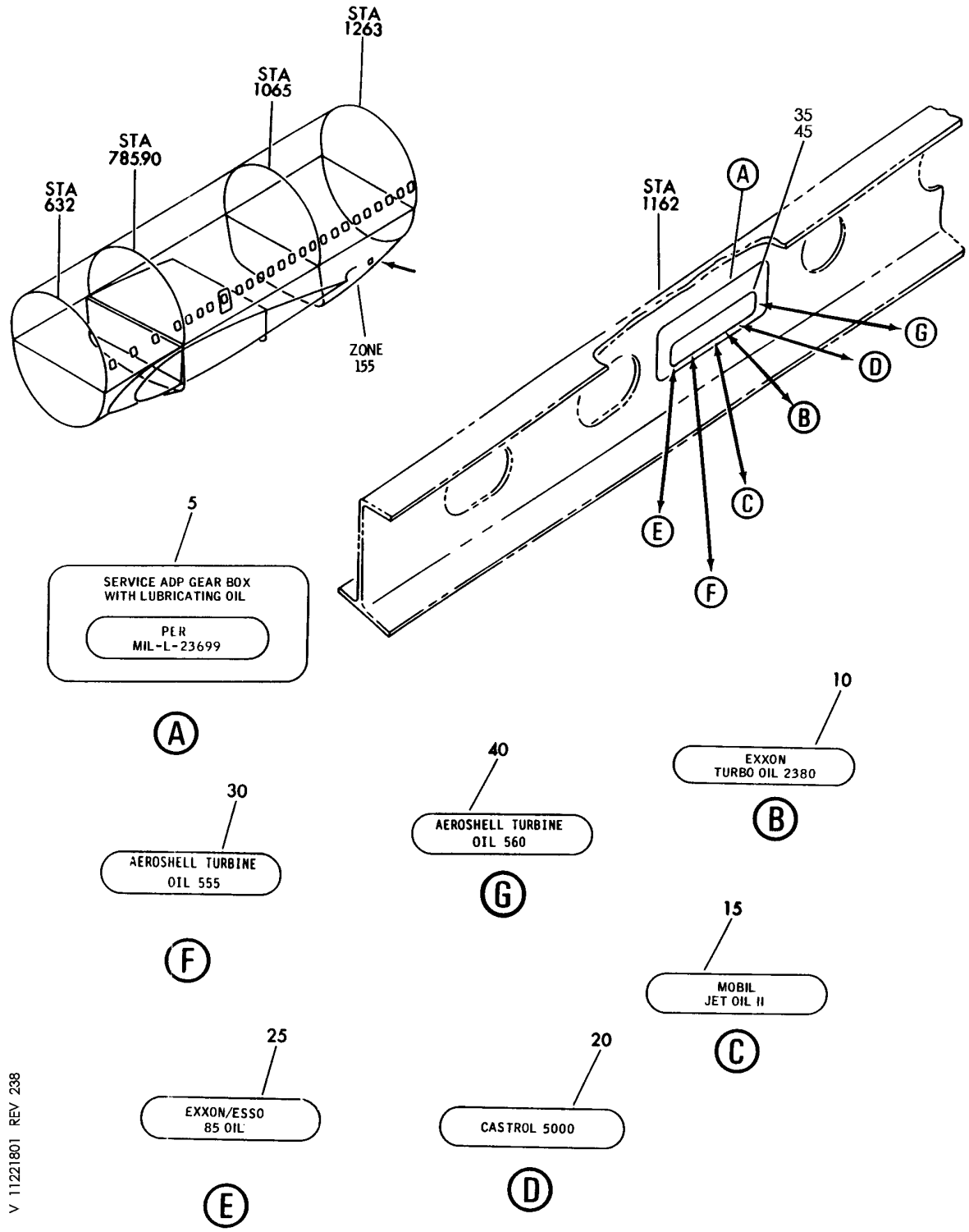

EXCHANGE INSTL-FLUID AND FILTER, PREMODULE
FIGURE 1

BOEING PROPRIETARY - Copyright © - Unpublished Work - See title page for details.

FIG ITEM	PART NUMBER	1 2 3 4 5 6 7 NOMENCLATURE	EFFECT FROM TO	UNITS PER ASSY
1		EXCHANGE INSTL-FLUID AND FILTER, PREMODULE		
- 1	270T0001-1	EXCHANGE INSTL-FLUID AND FILTER, PREMODULE VARIABLE DRAWING REF: 270T0001-5001 270T0001-5005 FOR NHA SEE: 29-00-00-02		RF
5	BAC27THY0152	.MARKER-ALUMINUM FOIL PLACARD CONTENT: SERVICE ADP GEAR BOX WITH LUBRICATING OIL		1
25	BAC27TPP0613	.MARKER-ALUMINUM FOIL PLACARD CONTENT: ESSO OR EXXON TURBO OIL 85	155162	1

ILLUSTRATION ITEMS NOT ON PARTS LIST ARE NOT APPLICABLE

- ITEM NOT ILLUSTRATED

BOEING PROPRIETARY - Copyright © - Unpublished Work - See title page for details.

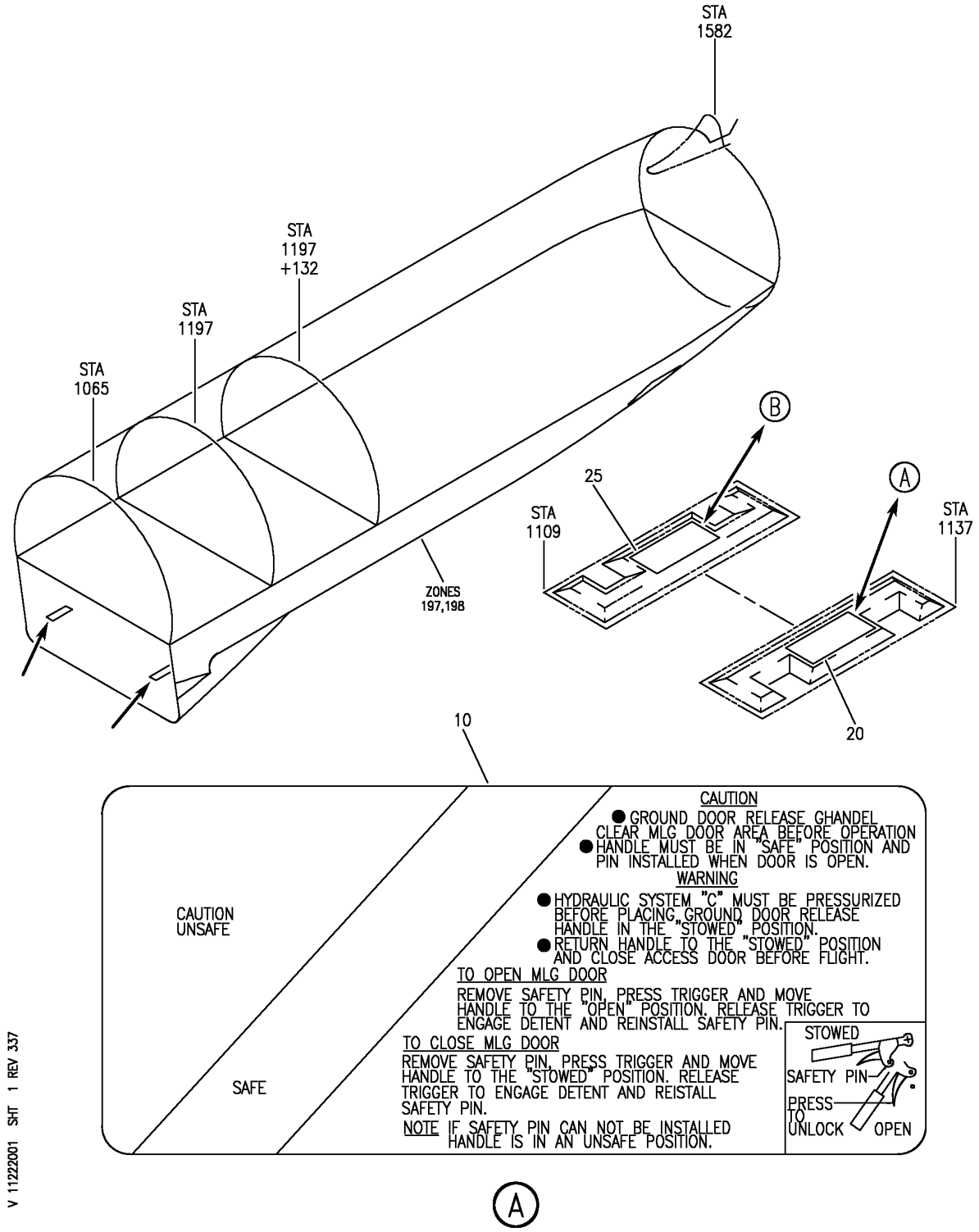

DOOR ASSY-AFT FAIRING MLG GND CONT ACCESS (PLACARDS AND MARKINGS ONLY)
FIGURE 1 (SHEET 1)

BOEING PROPRIETARY - Copyright © - Unpublished Work - See title page for details.

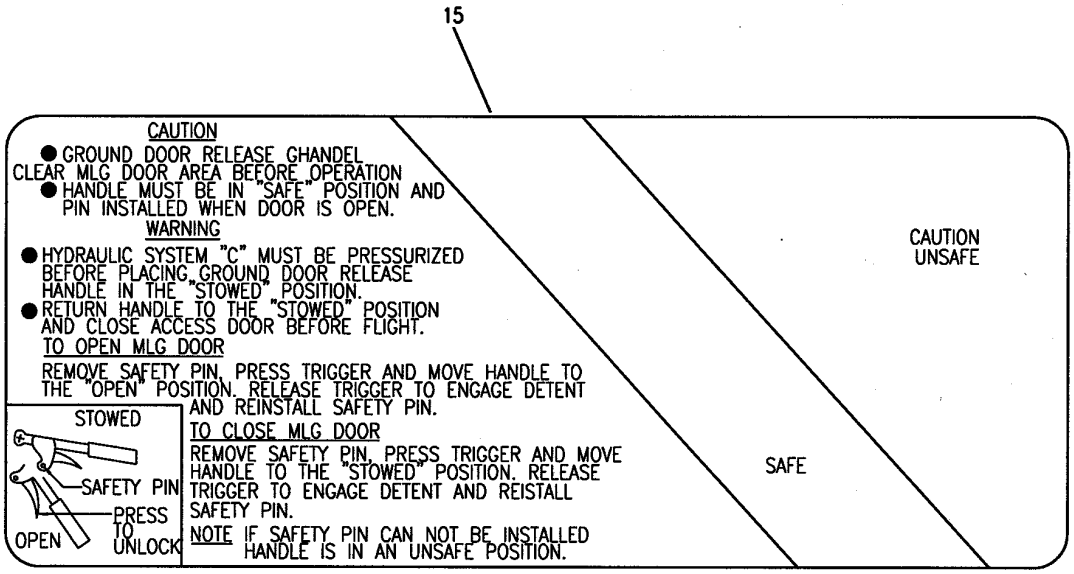

V 11222001 SHT 2 REV 216

DOOR ASSY-AFT FAIRING MLG GND CONT ACCESS (PLACARDS AND MARKINGS ONLY)
FIGURE 1 (SHEET 2)

BOEING PROPRIETARY - Copyright © - Unpublished Work - See title page for details.

FIG ITEM	PART NUMBER	1 2 3 4 5 6 7 NOMENCLATURE	EFFECT FROM TO	UNITS PER ASSY
1		DOOR ASSY-AFT FAIRING MLG GND CONT ACCESS (PLACARDS AND MARKINGS ONLY)		
- 1	149T7613-3	DOOR ASSY-FAIRING MLG GND CONT ACCESS (PLACARDS AND MARKINGS ONLY) POSITION DATA: AFT LH FOR NHA/OTHER SYS DET SEE: 53-66-59-01		RF
- 1	149T7613-15	DOOR ASSY-FAIRING MLG GND CONT ACCESS (PLACARDS AND MARKINGS ONLY) POSITION DATA: AFT LH FOR NHA/OTHER SYS DET SEE: 53-66-59-01		RF
- 5	149T7613-4	DOOR ASSY-FAIRING MLG GND CONT ACCESS (PLACARDS AND MARKINGS ONLY) (RH) POSITION DATA: AFT RH FOR NHA/OTHER SYS DET SEE: 53-66-59-01		RF
- 5	149T7613-16	DOOR ASSY-FAIRING MLG GND CONT ACCESS (PLACARDS AND MARKINGS ONLY) POSITION DATA: AFT RH FOR NHA/OTHER SYS DET SEE: 53-66-59-01		RF
10	BAC27TCT0312	.DECAL- POSITION DATA: LH SIDE		1
15	BAC27TCT0313	.DECAL- POSITION DATA: RH SIDE		1

ILLUSTRATION ITEMS NOT ON PARTS LIST ARE NOT APPLICABLE

- ITEM NOT ILLUSTRATED

BOEING PROPRIETARY - Copyright © - Unpublished Work - See title page for details.

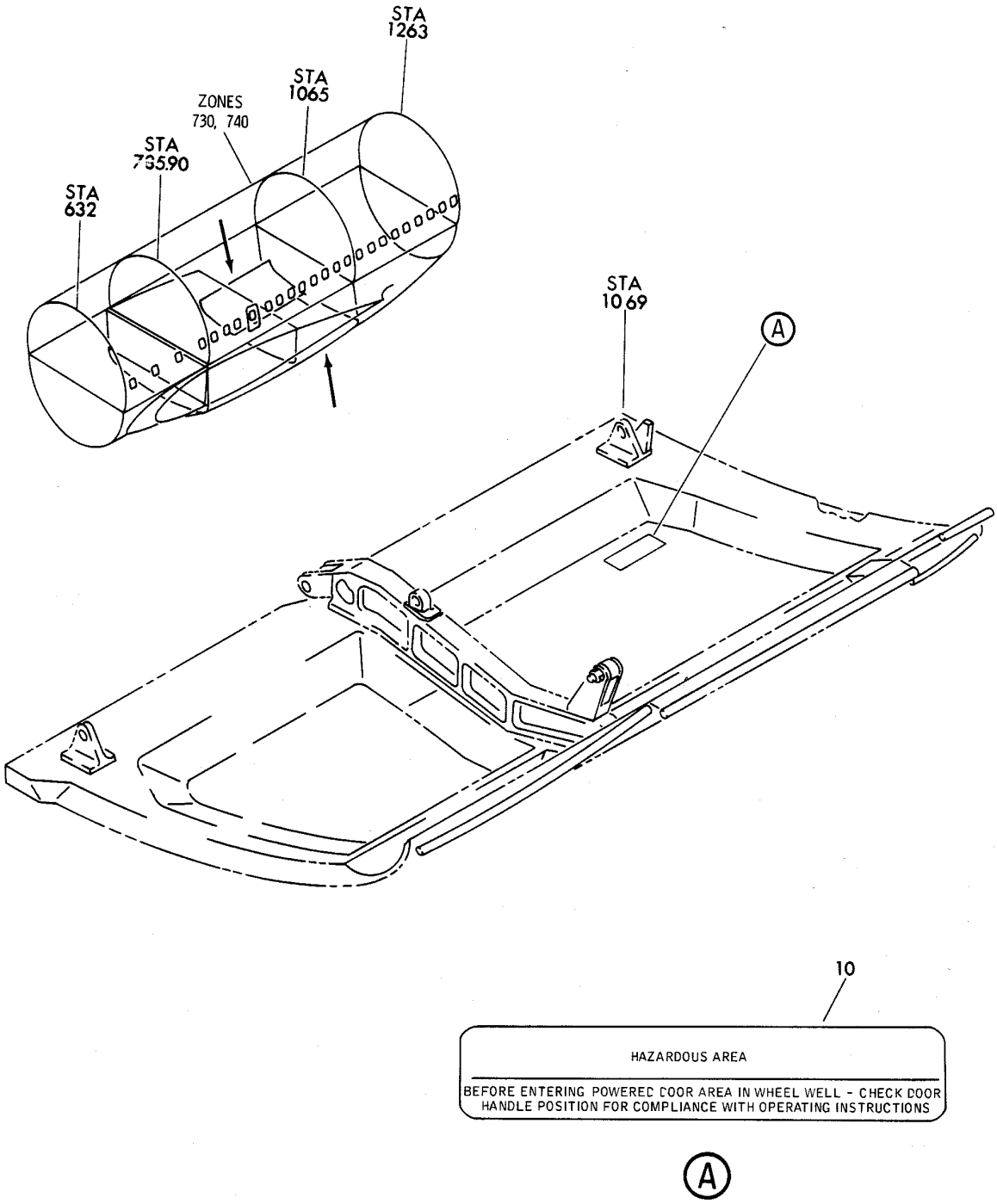

V 11222301 .SHT 1 REV 028

DOOR ASSY-MLG (PLACARDS AND MARKERS ONLY)
FIGURE 1

BOEING PROPRIETARY - Copyright © - Unpublished Work - See title page for details.

FIG ITEM	PART NUMBER	1 2 3 4 5 6 7 NOMENCLATURE	EFFECT FROM TO	UNITS PER ASSY
1		DOOR ASSY-MLG (PLACARDS AND MARKERS ONLY)		
- 1	149T6910-1	DOOR ASSY-MLG (PLACARDS AND MARKERS ONLY) POSITION DATA: LH MISCELLANEOUS DATA: FOR SPARE PROCURE LOWER COMPONENTS COMPONENT MAINT MANUAL REF: 32-12-02 VARIABLE DRAWING REF: 149T6910-5017 149T6910-7001 FOR NHA/OTHER SYS DET SEE: 53-00-54-01		RF
- 1	149T6910-29	DOOR ASSY-MLG (PLACARDS AND MARKERS ONLY) POSITION DATA: LH MISCELLANEOUS DATA: FOR SPARES PROCURE LOWER COMPOENTS COMPONENT MAINT MANUAL REF: 32-12-02 VARIABLE DRAWING REF: 149T6910-7001 QUALIFIED I/W DATA: 149T6910-29 CAN REPLACE BUT NOT REPLACE BY 149T6910-61 FOR NHA/OTHER SYS DET SEE: 53-00-54-01		RF
- 1	149T6910-61	DOOR ASSY-MLG (PLACARDS AND MARKERS ONLY) POSITION DATA: LH MISCELLANEOUS DATA: FOR SPARES PROCURE LOWER COMPONENTS COMPONENT MAINT MANUAL REF: 32-12-02 FOR NHA/OTHER SYS DET SEE: 53-00-54-01		RF

ILLUSTRATION ITEMS NOT ON PARTS LIST ARE NOT APPLICABLE

- ITEM NOT ILLUSTRATED

BOEING PROPRIETARY - Copyright © - Unpublished Work - See title page for details.

FIG ITEM	PART NUMBER	1 2 3 4 5 6 7 NOMENCLATURE	EFFECT FROM TO	UNITS PER ASSY
1				
- 1	149T6910-63	DOOR ASSY-MLG (PLACARDS AND MARKERS ONLY) POSITION DATA: LH MISCELLANEOUS DATA: FOR SPARES PROCURE LOWER COMPONENTS COMPONENT MAINT MANUAL REF: 32-12-02 FOR NHA/OTHER SYS DET SEE: 53-00-54-01		RF
- 5	149T6910-2	DOOR ASSY-MLG (PLACARDS AND MARKERS ONLY) POSITION DATA: RH MISCELLANEOUS DATA: FOR SPARES PROCURE LOWER COMPONENTS COMPONENT MAINT MANUAL REF: 32-12-02 VARIABLE DRAWING REF: 149T6910-5018 149T6910-7002 FOR SPARES PROCURE: 654T0005-16 FOR NHA/OTHER SYS DET SEE: 53-00-54-01		RF
- 5	149T6910-30	DOOR ASSY-MLG (PLACARDS AND MARKERS ONLY) POSITION DATA: RH MISCELLANEOUS DATA: FOR SPARES PROCURE LOWER COMPONENTS COMPONENT MAINT MANUAL REF: 32-12-02 VARIABLE DRAWING REF: 149T6910-7002 QUALIFIED I/W DATA: 149T6910-30 CAN REPLACE BUT NOT REPLACED BY 149T6910-62 FOR NHA/OTHER SYS DET SEE: 53-00-54-01		RF

ILLUSTRATION ITEMS NOT ON PARTS LIST ARE NOT APPLICABLE

- ITEM NOT ILLUSTRATED

BOEING PROPRIETARY - Copyright © - Unpublished Work - See title page for details.

FIG ITEM	PART NUMBER	1 2 3 4 5 6 7 NOMENCLATURE	EFFECT FROM TO	UNITS PER ASSY
1				
- 5	149T6910-62	DOOR ASSY-MLG (PLACARDS AND MARKERS ONLY) POSITION DATA: RH MISCELLANEOUS DATA: FOR SPARES PROCURE LOWER COMPONENTS COMPONENT MAINT MANUAL REF: 32-12-02 QUALIFIED I/W DATA: 149T6910-30 CAN REPLACE BUT NOT REPLACED BY 149T6910-62 FOR NHA/OTHER SYS DET SEE: 53-00-54-01		RF
- 5	149T6910-64	DOOR ASSY-MLG (PLACARDS AND MARKERS ONLY) POSITION DATA: RH MISCELLANEOUS DATA: FOR SPARES PROCURE LOWER COMPONENTS COMPONENT MAINT MANUAL REF: 32-12-02 FOR NHA/OTHER SYS DET SEE: 53-00-54-01		RF
10	BAC27ECT502	.MARKER-ALUM OPTIONAL PART: BAC27ECT1137		1
10	BAC27ECT1137	.MARKER-ALUM OPTIONAL PART: BAC27ECT502		1
10	BAC27ECT1150	.MARKER-ALUMINUM		1

ILLUSTRATION ITEMS NOT ON PARTS LIST ARE NOT APPLICABLE

- ITEM NOT ILLUSTRATED

BOEING PROPRIETARY - Copyright © - Unpublished Work - See title page for details.

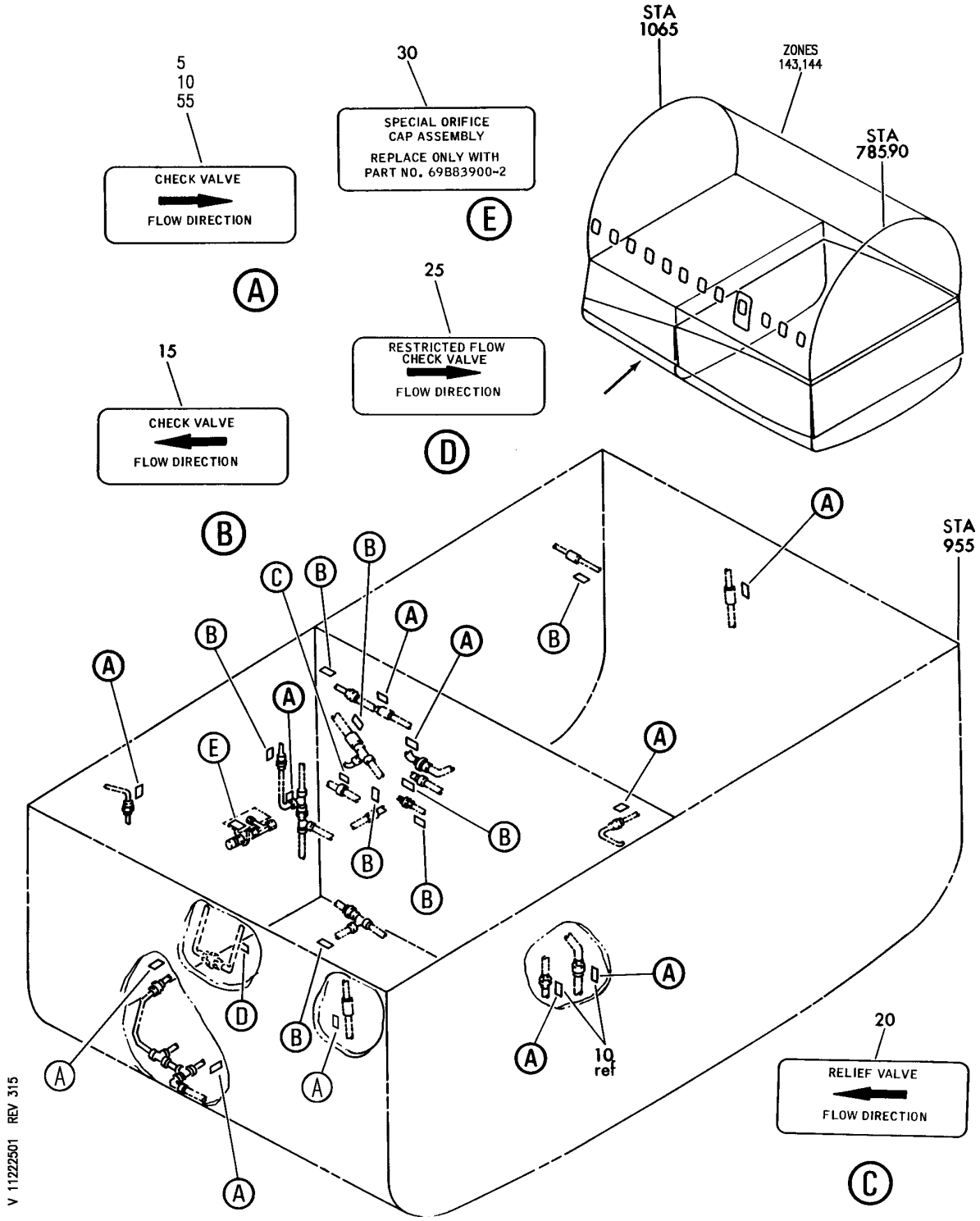

HYDRAULIC INSTL-SECT. 45 (PLACARDS AND MARKINGS ONLY)
FIGURE 1

BOEING PROPRIETARY - Copyright © - Unpublished Work - See title page for details.

FIG ITEM	PART NUMBER	1 2 3 4 5 6 7 NOMENCLATURE	EFFECT FROM TO	UNITS PER ASSY
1		HYDRAULIC INSTL-SECT. 45 (PLACARDS AND MARKINGS ONLY)		
- 2	272T4500-3	HYDRAULIC INSTL-(PLACARDS AND MARKINGS ONLY) POSITION DATA: SECT. 45 MISCELLANEOUS DATA: (CONT AT ITEM 002J) VARIABLE DRAWING REF: 272T4500-5191		RF
- 2	272T4500-3	HYDRAULIC INSTL-(PLACARDS AND MARKINGS ONLY) POSITION DATA: SECT. 45 VARIABLE DRAWING REF: 272T4500-5274 272T4500-5278 272T4500-7002 FOR NHA/OTHER SYS DET SEE: 29-00-00-06		RF
5	BAC27THY0123	.MARKER-ALUMINUM FOIL		8
15	BAC27THY0124	.MARKER-ALUMINUM FOIL		8
20	BAC27THY0155	.MARKER-ALUMINUM FOIL		1
25	BAC27THY0159	.MARKER-ALUMINUM FOIL		1
30	BAC27EHY135	.MARKER-ALUMINUM FOIL PLACARD CONTENT: SPECIAL ORIFICE CAP ASSEMBLY REPLACE ONLY WITH PART NO. 69B83900-2		1

ILLUSTRATION ITEMS NOT ON PARTS LIST ARE NOT APPLICABLE

- ITEM NOT ILLUSTRATED

BOEING PROPRIETARY - Copyright © - Unpublished Work - See title page for details.

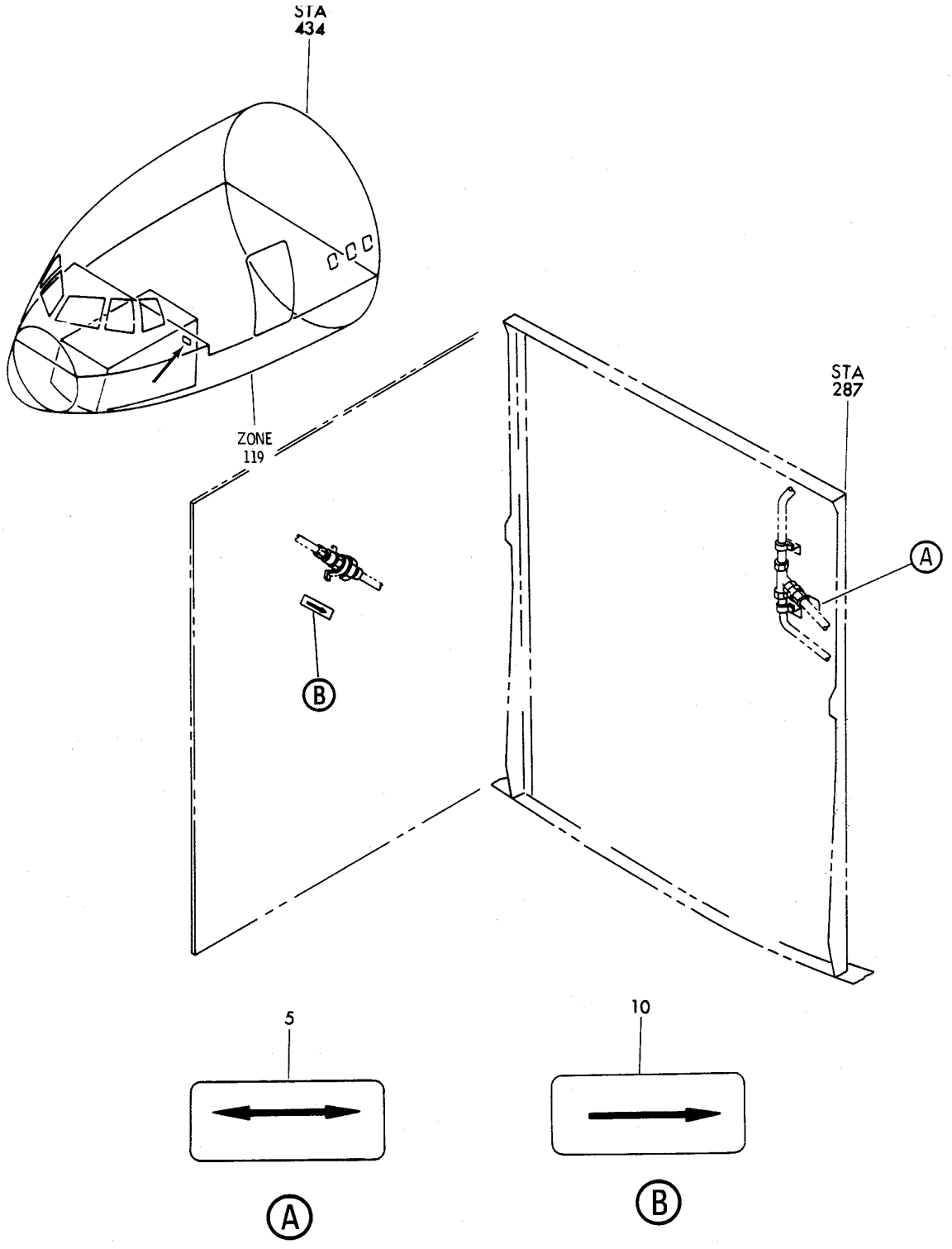

V 11222801 SHT 1 REV 032

HYDRAULIC INSTL-SECT. 41 (PLACARDS AND MARKINGS ONLY)
FIGURE 1

BOEING PROPRIETARY - Copyright © - Unpublished Work - See title page for details.

FIG ITEM	PART NUMBER	1 2 3 4 5 6 7 NOMENCLATURE	EFFECT FROM TO	UNITS PER ASSY
1		HYDRAULIC INSTL-SECT. 41 (PLACARDS AND MARKINGS ONLY)		
- 1	272T4100-3	HYDRAULIC INSTL-PLACARS AND MARKINGS ONLY POSITION DATA: SECT. 41 VARIABLE DRAWING REF: 272T4100-5010 272T4100-5013 272T4100-7002 FOR NHA/OTHER SYS DET SEE: 29-00-00-04		RF
5	BAC27THY0150	.MARKER-ALUMINUM FOIL		1
10	BAC27THY0156	.MARKER-ALUMINUM FOIL		1

ILLUSTRATION ITEMS NOT ON PARTS LIST ARE NOT APPLICABLE

- ITEM NOT ILLUSTRATED

BOEING PROPRIETARY - Copyright © - Unpublished Work - See title page for details.

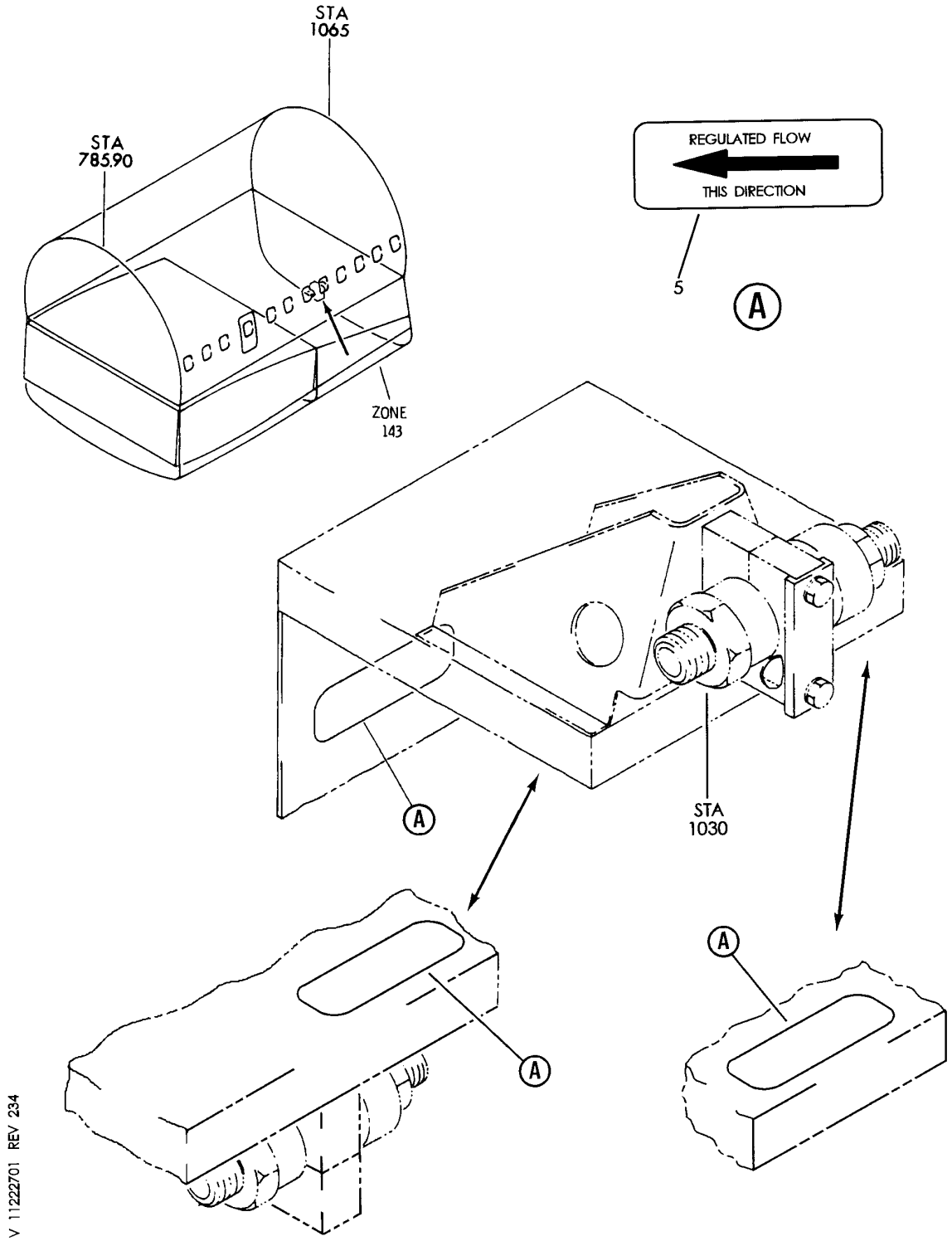

FLOW LIMITER INSTL-HYDR MOTOR/GENERATOR (PLACARDS AND MARKINGS ONLY)
FIGURE 1

BOEING PROPRIETARY - Copyright © - Unpublished Work - See title page for details.

FIG ITEM	PART NUMBER	1 2 3 4 5 6 7 NOMENCLATURE	EFFECT FROM TO	UNITS PER ASSY
1		FLOW LIMITER INSTL-HYDR MOTOR/GENERATOR (PLACARDS AND MARKINGS ONLY)		
- 1	272T0187-1	LIMITER INSTL-HYDR MOTOR/GENERATOR (PLACARDS AND MARKINGS ONLY) FOR NHA/OTHER SYS DET SEE: 24-25-52-02		RF
5	BAC27THY0162	.MARKER-ALUMINUM FOIL		1

ILLUSTRATION ITEMS NOT ON PARTS LIST ARE NOT APPLICABLE

– ITEM NOT ILLUSTRATED

BOEING PROPRIETARY - Copyright © - Unpublished Work - See title page for details.

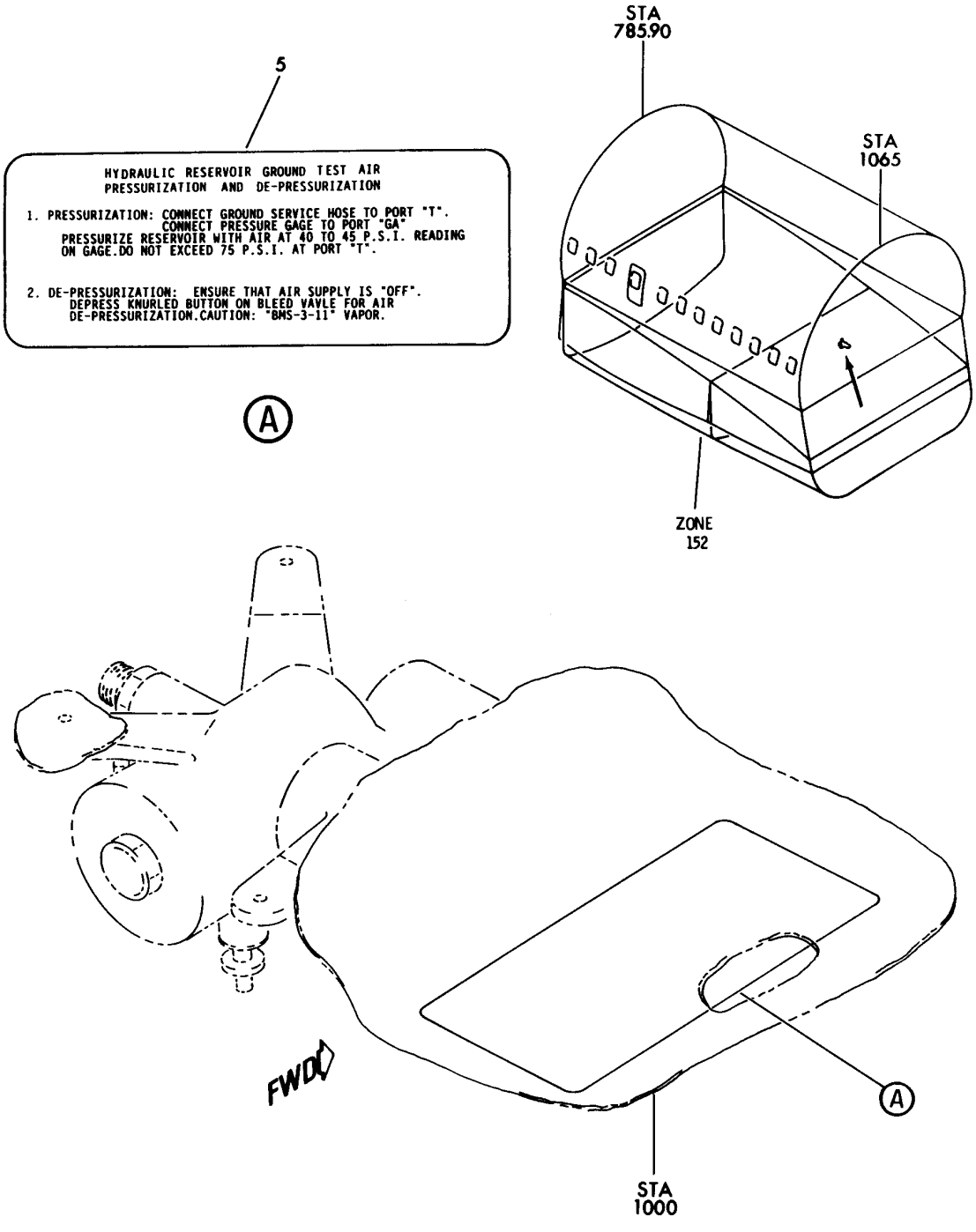

MODULE INSTL-RSVR PRESSURIZATION (PLACARDS AND MARKINGS ONLY)
FIGURE 1

BOEING PROPRIETARY - Copyright © - Unpublished Work - See title page for details.

FIG ITEM	PART NUMBER	1 2 3 4 5 6 7 NOMENCLATURE	EFFECT FROM TO	UNITS PER ASSY
1		MODULE INSTL-RSVR PRESSURIZATION (PLACARDS AND MARKINGS ONLY)		
- 1	271T4560-5	MODULE INSTL-RSVR PRESSURIZATION (PLACARDS AND MARKINGS ONLY) FOR NHA/OTHER SYS DET SEE: 29-11-26-02		RF
5	BAC27THY0064	.MARKER-ALUMINUM FOIL PLACARD CONTENT: INSTRUCTION		1

ILLUSTRATION ITEMS NOT ON PARTS LIST ARE NOT APPLICABLE

- ITEM NOT ILLUSTRATED

BOEING PROPRIETARY - Copyright © - Unpublished Work - See title page for details.

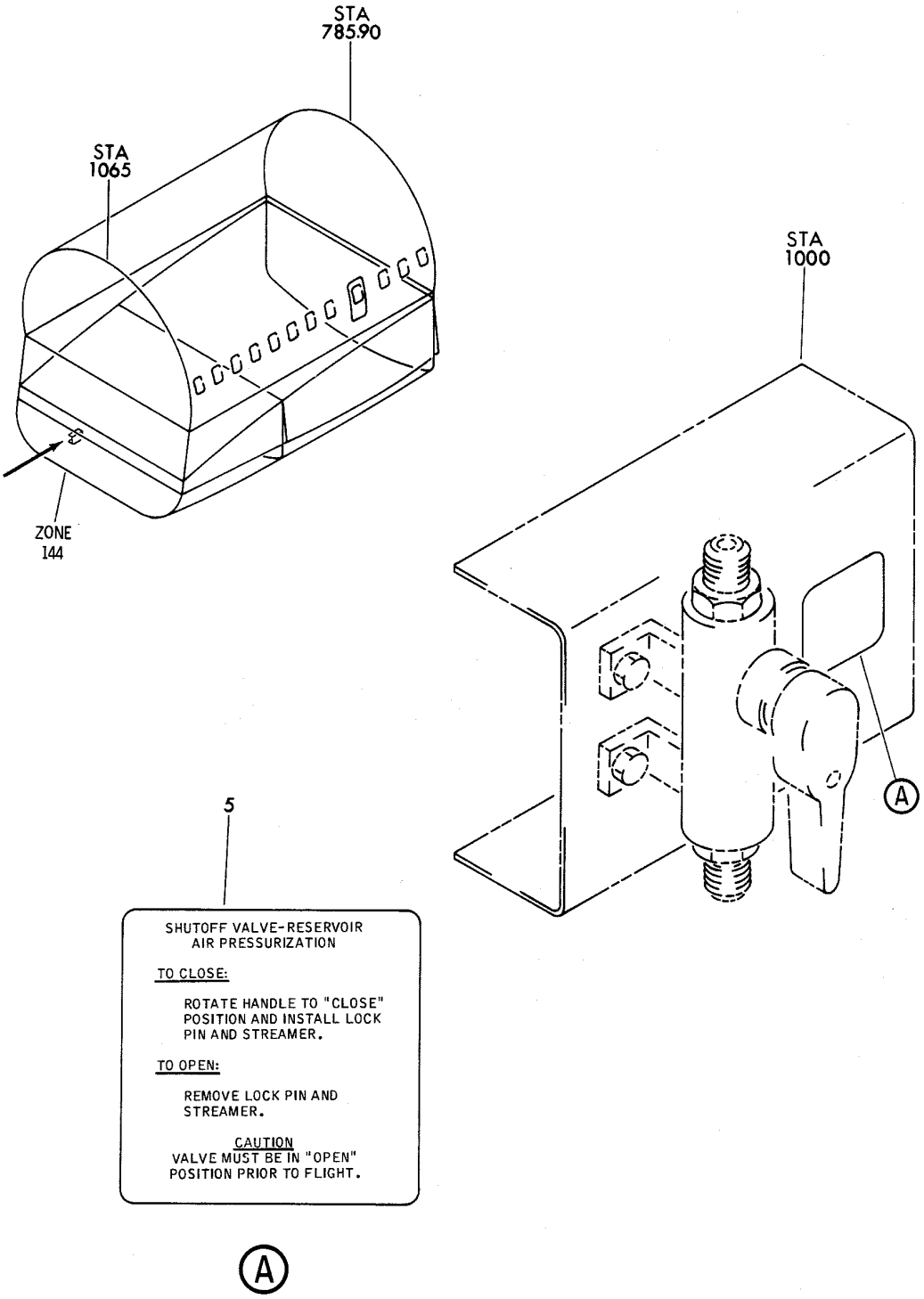

V 11223001 SHT 1 REV 025

VALVE INSTL-RSVR PRESSURIZATION SHUTOFF (PLACARDS AND MARKINGS ONLY)
FIGURE 1

BOEING PROPRIETARY - Copyright © - Unpublished Work - See title page for details.

FIG ITEM	PART NUMBER	1 2 3 4 5 6 7 NOMENCLATURE	EFFECT FROM TO	UNITS PER ASSY
1		VALVE INSTL-RSVR PRESSURIZATION SHUTOFF (PLACARDS AND MARKINGS ONLY)		
- 1	271T4563-1	VALVE INSTL-RSVR PRESSURIZATION SHUTOFF (PLACARDS AND MARKINGS ONLY) FOR NHA/OTHER SYS DET SEE: 29-11-28-02		RF
5	BAC27THY0146	.MARKER-ALUMINUM FOIL		1

ILLUSTRATION ITEMS NOT ON PARTS LIST ARE NOT APPLICABLE

- ITEM NOT ILLUSTRATED

BOEING PROPRIETARY - Copyright © - Unpublished Work - See title page for details.

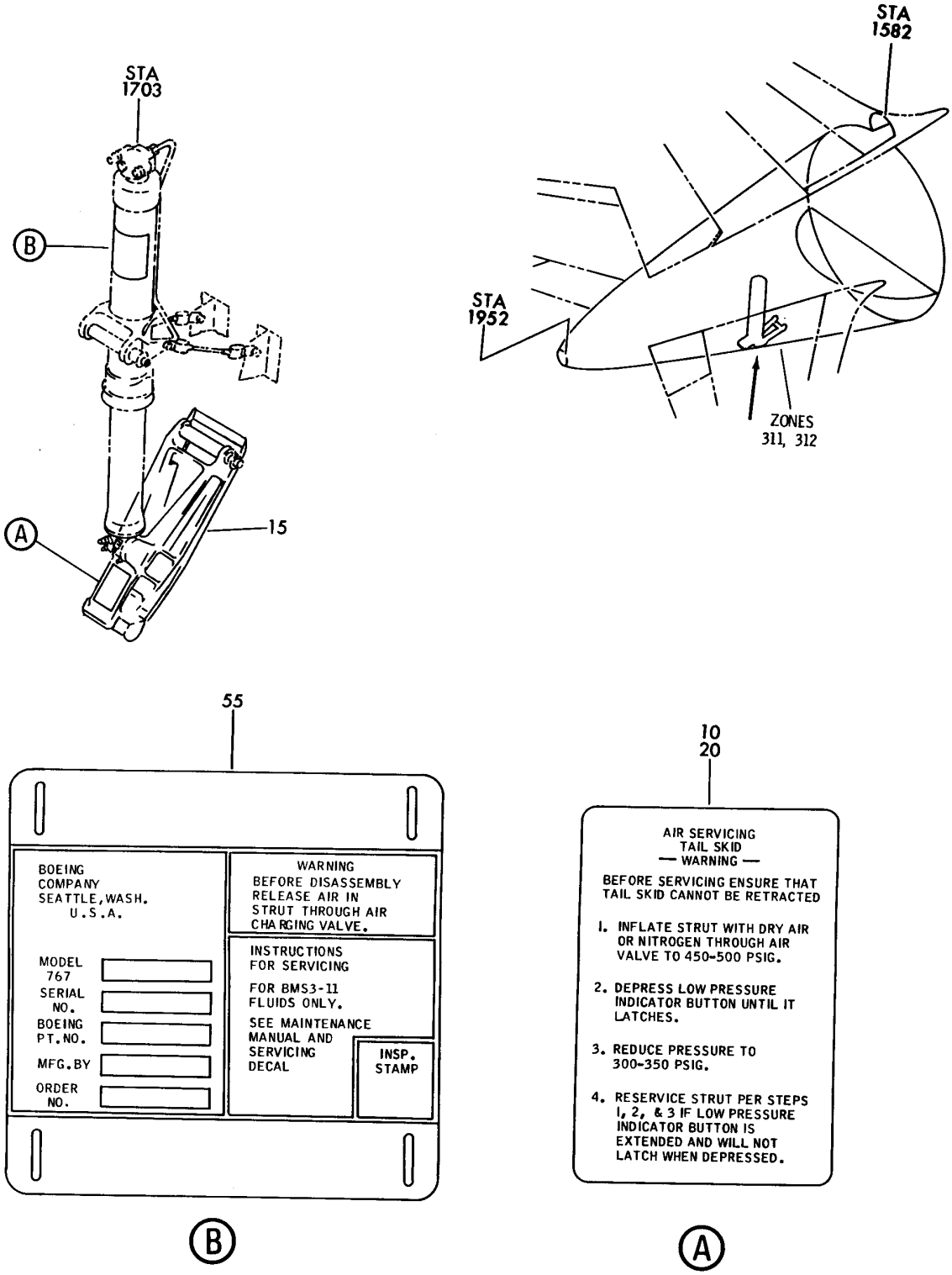

TAIL SKID INSTL AND STRUT ASSY-SHOCK 767-300 (PLACARDS AND MARKINGS ONLY)
FIGURE 1

BOEING PROPRIETARY - Copyright © - Unpublished Work - See title page for details.

	FIG ITEM	PART NUMBER	1 2 3 4 5 6 7 NOMENCLATURE	EFFECT FROM TO	UNITS PER ASSY
	1		TAIL SKID INSTL AND STRUT ASSY-SHOCK 767-300 (PLACARDS AND MARKINGS ONLY)		
	- 1	163T0000-002	TAIL SKID INSTL-MODEL 767-300 (PLACARDS AND MARKINGS ONLY) VARIABLE DRAWING REF: 163T0000-5001 FOR NHA/OTHER SYS DET SEE: 32-00-00-01		RF
	10	BAC27TLG0008	.DECAL- PLACARD CONTENT: AIR SERVICING TAIL SKID		1
R	15	163T1000-3	.LEVER ASSY-FTG COMPONENT MAINT MANUAL REF: 32-71-06		1
R	15	163T1000-1	.LEVER ASSY-FTG COMPONENT MAINT MANUAL REF: 32-71-06		1
R	15	163T1000-5	.LEVER ASSY-FTG		1
R	20	BAC27TLG0008	..DECAL- PLACARD CONTENT: AIR SERVICING TAIL SKID		1
	- 50	163T2000-2	STRUT ASSY-SHOCK (PLACARDS AND MARKINGS ONLY) MISCELLANEOUS DATA: FOR SPARES PROCURE LOWER COMPONENTS COMPONENT MAINT MANUAL REF: 32-71-05 FOR NHA/OTHER SYS DET SEE: 32-71-56-01		RF
	- 50	163T2000-3	STRUT ASSY-SHOCK (PLACARDS AND MARKINGS ONLY) MISCELLANEOUS DATA: FOR SPARES PROCURE LOWER COMPONENTS COMPONENT MAINT MANUAL REF: 32-71-05 FOR NHA/OTHER SYS DET SEE: 32-71-56-01		RF
	55	163T2023-1	.NAMEPLATE		1

ILLUSTRATION ITEMS NOT ON PARTS LIST ARE NOT APPLICABLE

- ITEM NOT ILLUSTRATED

BOEING PROPRIETARY - Copyright © - Unpublished Work - See title page for details.

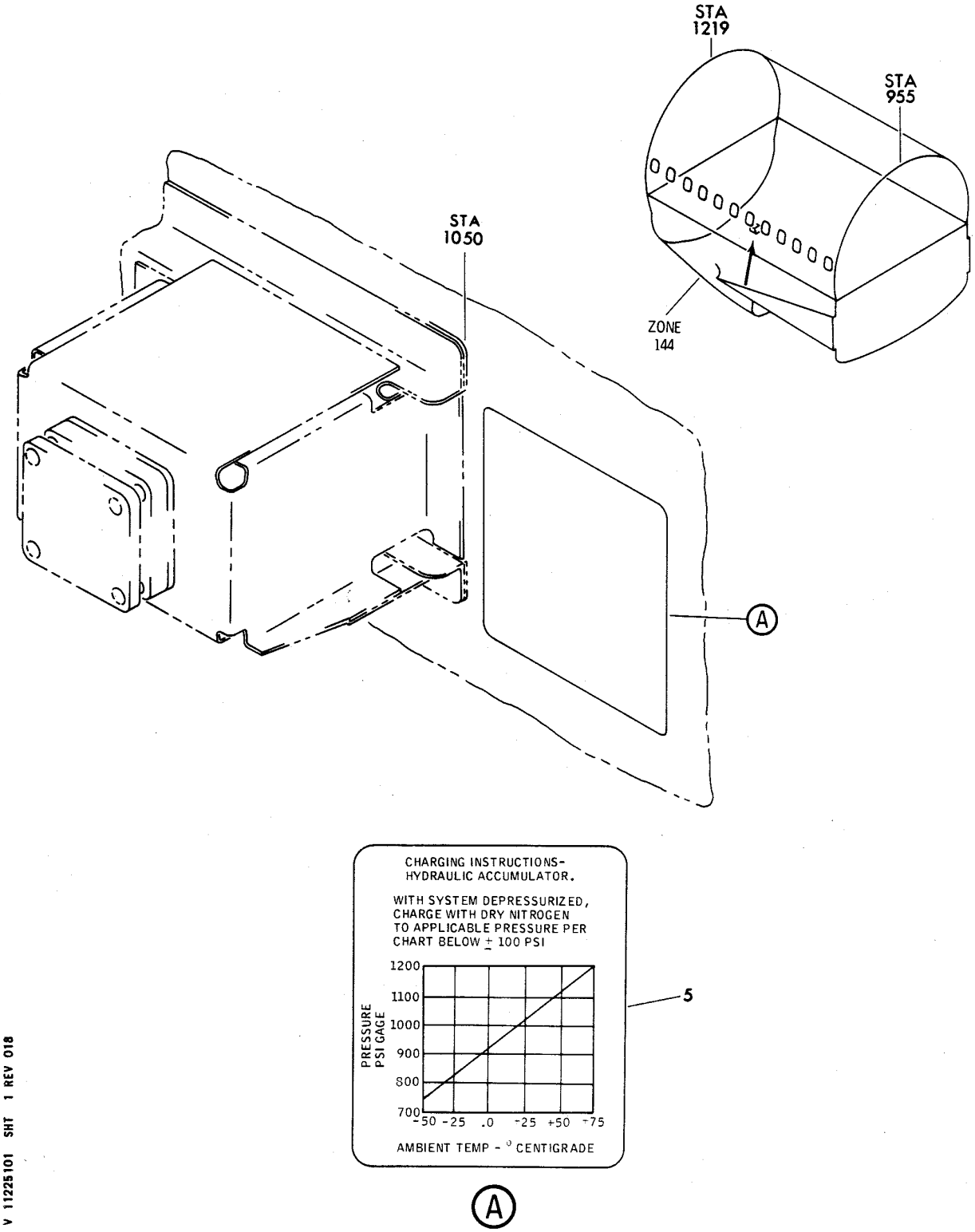

V 11225101 SHT 1 REV 018

VALVE INSTL-PARKING BRAKE CHARGING (PLACARDS AND MARKINGS ONLY)
FIGURE 1

BOEING PROPRIETARY - Copyright © - Unpublished Work - See title page for details.

FIG ITEM	PART NUMBER	1 2 3 4 5 6 7 NOMENCLATURE	EFFECT FROM TO	UNITS PER ASSY
1		VALVE INSTL-PARKING BRAKE CHARGING (PLACARDS AND MARKINGS ONLY)		
- 1	274T4640-12	VALVE INSTL-PARKING BRAKE CHARGING (PLACARDS AND MARKINGS ONLY) FOR NHA/OTHER SYS DET SEE: 32-44-53-01		RF
5	BAC27THY0058	.MARKER-ALUMINUM FOIL		1

ILLUSTRATION ITEMS NOT ON PARTS LIST ARE NOT APPLICABLE

- ITEM NOT ILLUSTRATED

BOEING PROPRIETARY - Copyright © - Unpublished Work - See title page for details.

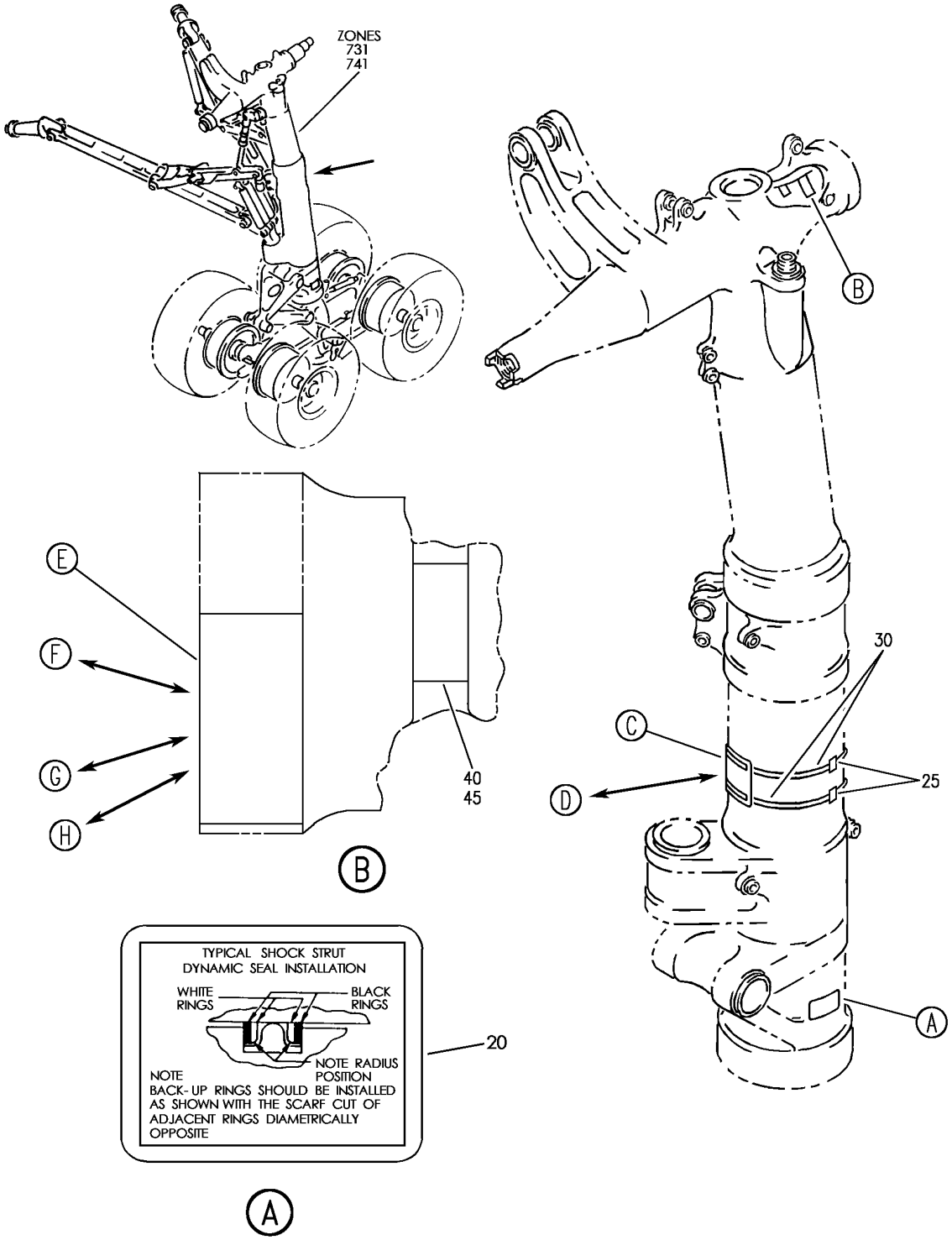

V 11225202N SHT 1 REV 286

STRUT ASS-MLG SHOCK (PLACARDS AND MARKINGS ONLY)
FIGURE 2N (SHEET 1)

BOEING PROPRIETARY - Copyright © - Unpublished Work - See title page for details.

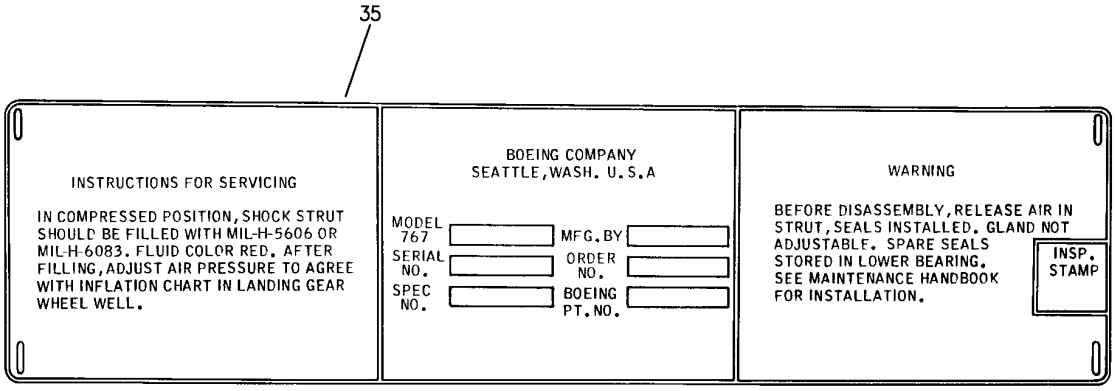

C

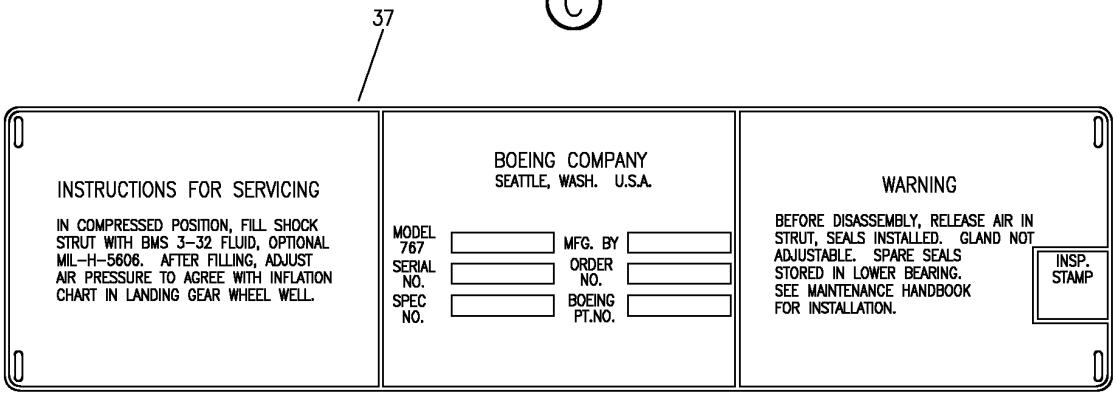

D

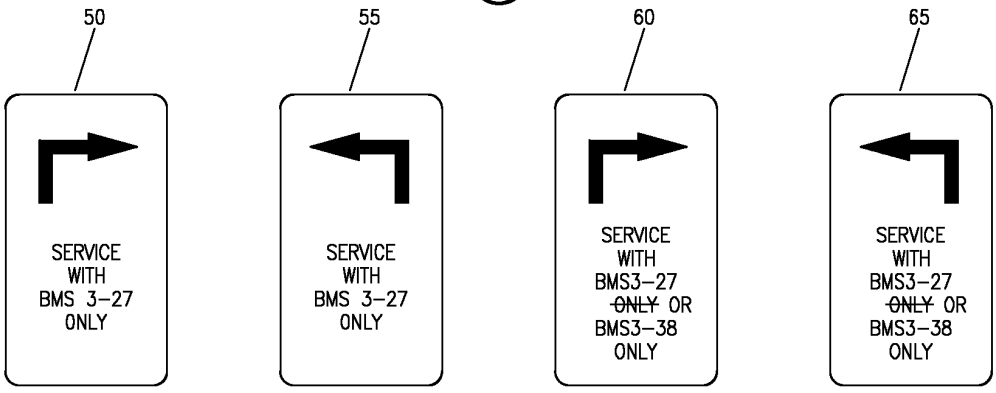

E F G H

V 11225202N SHT 2 REV 272

STRUT ASS-MLG SHOCK (PLACARDS AND MARKINGS ONLY)
FIGURE 2N (SHEET 2)

BOEING PROPRIETARY - Copyright © - Unpublished Work - See title page for details.

FIG ITEM	PART NUMBER	1 2 3 4 5 6 7 NOMENCLATURE	EFFECT FROM TO	UNITS PER ASSY
2N		STRUT ASS-MLG SHOCK (PLACARDS AND MARKINGS ONLY)	163999	
- 1	161T1100-357	STRUT ASSY-SHOCK MLG (PLACARDS AND MARKINGS ONLY) POSITION DATA: LH MISCELLANEOUS DATA: FOR SPARES PROCURE LOWER COMPONENTS COMPONENT MAINT MANUAL REF: 32-11-40 QUALIFIED I/W DATA: 161T1100-395, -357, -377, -339, -345, -321, -281, -225, -279, -257, -167, -145, -127, -89, -115, -71, -87, -63, -67, -47, -259 T/W 161T1306-2 MAY REPLACE BUT NOT BE REPLACED BY 161T1100-37, -17 T/W 161T1306-1 161T1100-339, -345, -321, -281, -225, -279 MAY REPLACE BUT NOT BE REPLACED BY 161T1100-169, -151, -161, -107, -95 INCLUDE BE-CU PARTS WITH CUSTOMER APPROVAL 161T1100-397, -361 INCLUDES BE-CU PARTS IS I/W 161T1100-395, -357, -377 WITH CUSTOMER APPROVAL FOR NHA/OTHER SYS DET SEE: 32-11-02-03N	163999	RF

ILLUSTRATION ITEMS NOT ON PARTS LIST ARE NOT APPLICABLE

– ITEM NOT ILLUSTRATED

BOEING PROPRIETARY - Copyright © - Unpublished Work - See title page for details.

FIG ITEM	PART NUMBER	1 2 3 4 5 6 7 NOMENCLATURE	EFFECT FROM TO	UNITS PER ASSY
2N				
- 1	015T1504-37	STRUT ASSY-SHOCK MLG (PLACARDS AND MARKINGS ONLY) POSITION DATA: LH COMPONENT MAINT MANUAL REF: 32-11-40 ALTERED FROM PART NUMBER: 161T1100-127 POST ALERT SB: 32A0148 FOR NHA/OTHER SYS DET SEE: 32-11-02-03N	163999	RF
- 1	015T0819-9	STRUT ASSY-SHOCK MLG (PLACARS AND MARKINGS ONLY) POSITION DATA: LH COMPONENT MAINT MANUAL REF: 32-11-40 POST SERVICE BULLETIN: 32-0145 FOR NHA/OTHER SYS DET SEE: 32-11-02-03N	163999	RF
- 2	015T0819-7	STRUT ASSY-SHOCK MLG (PLACARDS AND MARKINGS ONLY) POSITION DATA: LH COMPONENT MAINT MANUAL REF: 32-11-40 POST SERVICE BULLETIN: 32-0145 FOR NHA/OTHER SYS DET SEE: 32-11-02-03N	163999	RF
- 2	015T1504-39	STRUT ASSY-SHOCK MLG (PLACARDS AND MARKINGS ONLY) POSITION DATA: LH COMPONENT MAINT MANUAL REF: 32-11-40 POST ALERT SB: 32A0148R2 FOR NHA/OTHER SYS DET SEE: 32-11-02-03N	163999	RF

ILLUSTRATION ITEMS NOT ON PARTS LIST ARE NOT APPLICABLE

- ITEM NOT ILLUSTRATED

BOEING PROPRIETARY - Copyright © - Unpublished Work - See title page for details.

FIG ITEM	PART NUMBER	1 2 3 4 5 6 7 NOMENCLATURE	EFFECT FROM TO	UNITS PER ASSY
2N				
- 2	015T1504-47	STRUT ASSY-SHOCK MLG (PLACARDS AND MARKINGS ONLY) COMPONENT MAINT MANUAL REF: 32-11-40 POST ALERT SB: 32A0148R2 FOR NHA/OTHER SYS DET SEE: 32-11-02-03N	163999	RF
- 2	161T1100-357	STRUT ASSY-SHOCK MLG (PLACARDS AND MARKINGS ONLY) COMPONENT MAINT MANUAL REF: 32-11-40 QUALIFIED I/W DATA: 161T1100-339, -345, -321, -281, -225, -279 MAY REPLACE BUT NOT BE REPLACED BY 161T1100-169, -151, -161, -107, -95 INCLUDE BE-CU PARTS WITH CUSTOMER APPROVAL	163999	RF
- 3	161T1100-281	STRUT ASSY-SHOCK MLG (PLACARDS AND MARKINGS ONLY) POSITION DATA: LH MISCELLANEOUS DATA: FOR SPARES PROCURE LOWER COMPONENTS COMPONENT MAINT MANUAL REF: 32-11-40 QUALIFIED I/W DATA: 161T1100-395, -357, -377, -339, -345, -321, -281, -225, -279, -257, -167, -145, -127, -89, -115, -71, -87, -63, -67, -47, -259 T/W 161T1306-2 MAY REPLACE BUT NOT BE REPLACED BY 161T1100-37, -17 T/W 161T1306-1 FOR NHA/OTHER SYS DET SEE: 32-11-02-03N	163999	RF

ILLUSTRATION ITEMS NOT ON PARTS LIST ARE NOT APPLICABLE

- ITEM NOT ILLUSTRATED

BOEING PROPRIETARY - Copyright © - Unpublished Work - See title page for details.

FIG ITEM	PART NUMBER	1 2 3 4 5 6 7 NOMENCLATURE	EFFECT FROM TO	UNITS PER ASSY
2N				
- 3	161T1100-281	STRUT ASSY-SHOCK MLG (PLACARDS AND MARKINGS ONLY) COMPONENT MAINT MANUAL REF: 32-11-40 QUALIFIED I/W DATA: 161T1100-339, -345, -321, -281, -225, -279 MAY REPLACE BUT NOT BE REPLACED BY 161T1100-169, -151, -161, -107, -95 INCLUDE BE-CU PARTS WITH CUSTOMER APPROVAL 161T1100-395, -357, -377, -339, -345, -321, -281, -225, -279, -257, -167, -145, -127, -89, -115, -71, -87, -63, -67, -47, -259 T/W 161T1306-2 MAY REPLACE BUT NOT BE REPLACED BY 161T1100-37, -17 T/W 161T1306-1 161T1100-339, -345, -321, -281, -225 ARE I/W 161T1100-343, -323, -277 INCLUDE BE-CU PARTS WITH CUSTOMER APPROVAL 161T1100-397, -361 INCLUDE BE-CU PARTS MAY REPLACE BUT NOT BE REPLACED BY 161T1100-339, -345, -321, -281, -225, -279, -257, -167, -145, -127, -89, -115, -71, -87, -63, -67, -47, -259, -119, -77, -55, -41, -19 WITH CUSTOMER APPROVAL	163999	RF

ILLUSTRATION ITEMS NOT ON PARTS LIST ARE NOT APPLICABLE

- ITEM NOT ILLUSTRATED

BOEING PROPRIETARY - Copyright © - Unpublished Work - See title page for details.

FIG ITEM	PART NUMBER	1 2 3 4 5 6 7 NOMENCLATURE	EFFECT FROM TO	UNITS PER ASSY
2N				
- 4	161T1100-321	STRUT ASSY-SHOCK MLG (PLACARDS AND MARKINGS ONLY) POSITION DATA: LH MISCELLANEOUS DATA: FOR SPARES PROCURE LOWER COMPONENTS COMPONENT MAINT MANUAL REF: 32-11-40 QUALIFIED I/W DATA: 161T1100-395, -357, -377, -339, -345, -321, -281, -225, -279 -257, -167, -145, -127, -89, -115, -71, -87, -63, -67, -47, -259 T/W 161T1306-2 MAY REPLACE BUT NOT BE REPLACED BY 161T1100-37, -17 T/W 161T1306-1 FOR NHA/OTHER SYS DET SEE: 32-11-02-03N	163999	RF

ILLUSTRATION ITEMS NOT ON PARTS LIST ARE NOT APPLICABLE

- ITEM NOT ILLUSTRATED

BOEING PROPRIETARY - Copyright © - Unpublished Work - See title page for details.

FIG ITEM	PART NUMBER	1 2 3 4 5 6 7 NOMENCLATURE	EFFECT FROM TO	UNITS PER ASSY
2N				
- 4	161T1100-321	STRUT ASSY-SHOCK MLG (PLACARDS AND MARKINGS ONLY) COMPONENT MAINT MANUAL REF: 32-11-40 QUALIFIED I/W DATA: 161T1100-339, -345, -321, -281, -225, -279 MAY REPLACE BUT NOT BE REPLACED BY 161T1100-169, -151, -161, -107, -95 INCLUDE BE-CU PARTS WITH CUSTOMER APPROVAL 161T1100-339, -345, -321, -281, -225 ARE I/W 161T1100-343, -323, -277 INCLUDE BE-CU PARTS WITH CUSTOMER APPROVAL 161T1100-397, -361 INCLUDE BE-CU PARTS MAY REPLACE BUT NOT BE REPLACED BY 161T1100-339, -345, -321, -281, -225, -279, -257, -167, -145, -127, -89, -115, -71, -87, -63, -67, -47, -259, -119, -77, -55, -41, -19 WITH CUSTOMER APPROVAL 161T1100-395, -357, -377, -339, -345, -321, -281, -225, -279 -257, -167, -145, -127, -89, -115, -71, -87, -63, -67, -47, -259 T/W 161T1306-2 MAY REPLACE BUT NOT BE REPLACED BY 161T1100-37, -17 T/W 161T1306-1	163999	RF

ILLUSTRATION ITEMS NOT ON PARTS LIST ARE NOT APPLICABLE

- ITEM NOT ILLUSTRATED

BOEING PROPRIETARY - Copyright © - Unpublished Work - See title page for details.

FIG ITEM	PART NUMBER	1 2 3 4 5 6 7 NOMENCLATURE	EFFECT FROM TO	UNITS PER ASSY
2N				
- 4	161T1100-377	STRUT ASSY-SHOCK REWORK MLG (PLACARDS AND MARKINGS ONLY) POSITION DATA: LH COMPONENT MAINT MANUAL REF: 32-11-40 QUALIFIED I/W DATA: 161T1100-395, -357, -377 MAY REPLACE BUT NOT BE REPLACED BY 161T1100-343, -323, -277, -169, -151, -161, -107, -95 INCLUDE BE-CU PARTS WITH CUSTOMER APPROVAL POST ALERT SB: 32A0148R2 FOR NHA/OTHER SYS DET SEE: 32-11-02-03N	163999	RF
- 4	161T1100-377	STRUT ASSY-SHOCK REWORK MLG (PLACARDS AND MARKINGS ONLY) COMPONENT MAINT MANUAL REF: 32-11-40 QUALIFIED I/W DATA: 161T1100-395, -357, -377 MAY REPLACE BUT NOT BE REPLACED BY 161T1100-343, -323, -277, -169, -151, -161, -107, -95 INCLUDE BE-CU PARTS WITH CUSTOMER APPROVAL 161T1100-397, -361 INCLUDES BE-CU PARTS IS I/W 161T1100-395, -357, -377 WITH CUSTOMER APPROVAL 161T1100-395, -357, -377, -339, -345, -321, -281, -225, -279 -257, -167, -145, -127, -89, -115, -71, -87, -63, -67, -47, -259 T/W 161T1306-2 MAY REPLACE BUT NOT BE REPLACED BY 161T1100-37, -17 T/W 161T1306-1	163999	RF

ILLUSTRATION ITEMS NOT ON PARTS LIST ARE NOT APPLICABLE

- ITEM NOT ILLUSTRATED

BOEING PROPRIETARY - Copyright © - Unpublished Work - See title page for details.

FIG ITEM	PART NUMBER	1 2 3 4 5 6 7 NOMENCLATURE	EFFECT FROM TO	UNITS PER ASSY
2N				
- 4	161T1100-345	STRUT ASSY-SHOCK MLG (PLACARDS AND MARKINGS ONLY) POSITION DATA: LH MISCELLANEOUS DATA: FOR SPARES PROCURE LOWER COMPONENTS COMPONENT MAINT MANUAL REF: 32-11-40 QUALIFIED I/W DATA: 161T1100-395, -357, -377, -339, -345, -321, -281, -225, -279 -257, -167, -145, -127, -89, -115, -71, -87, -63, -67, -47, -259 T/W 161T1306-2 MAY REPLACE BUT NOT BE REPLACED BY 161T1100-37, -17 T/W 161T1306-1 161T1100-339, -345, -321, -281, -225, -279 MAY REPLACE BUT NOT BE REPLACED BY 161T1100-169, -151, -161, -107, -95 INCLUDE BE-CU PARTS WITH CUSTOMER APPROVAL FOR NHA/OTHER SYS DET SEE: 32-11-02-03N	163999	RF

ILLUSTRATION ITEMS NOT ON PARTS LIST ARE NOT APPLICABLE

- ITEM NOT ILLUSTRATED

BOEING PROPRIETARY - Copyright © - Unpublished Work - See title page for details.

FIG ITEM	PART NUMBER	1 2 3 4 5 6 7 NOMENCLATURE	EFFECT FROM TO	UNITS PER ASSY
2N				
- 4	161T1100-345	STRUT ASSY-SHOCK MLG (PLACARDS AND MARKINGS ONLY) COMPONENT MAINT MANUAL REF: 32-11-40 QUALIFIED I/W DATA: 161T1100-339, -345, -321, -281, -225, -279 MAY REPLACE BUT NOT BE REPLACED BY 161T1100-169, -151, -161, -107, -95 INCLUDE BE-CU PARTS WITH CUSTOMER APPROVAL 161T1100-339, -345, -321, -281, -225 ARE I/W 161T1100-343, -323, -277 INCLUDE BE-CU PARTS WITH CUSTOMER APPROVAL 161T1100-397, -361 INCLUDE BE-CU PARTS MAY REPLACE BUT NOT BE REPLACED BY 161T1100-339, -345, -321, -281, -225, -279, -257, -167, -145, -127, -89, -115, -71, -87, -63, -67, -47, -259, -119, -77, -55, -41, -19 WITH CUSTOMER APPROVAL 161T1100-395, -357, -377, -339, -345, -321, -281, -225, -279 -257, -167, -145, -127, -89, -115, -71, -87, -63, -67, -47, -259 T/W 161T1306-2 MAY REPLACE BUT NOT BE REPLACED BY 161T1100-37, -17 T/W 161T1306-1	163999	RF

ILLUSTRATION ITEMS NOT ON PARTS LIST ARE NOT APPLICABLE

- ITEM NOT ILLUSTRATED

BOEING PROPRIETARY - Copyright © - Unpublished Work - See title page for details.

FIG ITEM	PART NUMBER	1 2 3 4 5 6 7 NOMENCLATURE	EFFECT FROM TO	UNITS PER ASSY
2N				
- 4	161T1100-339	STRUT ASSY-SHOCK MLG (PLACARDS AND MARKINGS ONLY) POSITION DATA: LH MISCELLANEOUS DATA: FOR SPARES PROCURE LOWER COMPONENTS COMPONENT MAINT MANUAL REF: 32-11-40 QUALIFIED I/W DATA: 161T1100-395, -357, -377, -339, -345, -321, -281, -225, -279 -257, -167, -145, -127, -89, -115, -71, -87, -63, -67, -47, -259 T/W 161T1306-2 MAY REPLACE BUT NOT BE REPLACED BY 161T1100-37, -17 T/W 161T1306-1 FOR NHA/OTHER SYS DET SEE: 32-11-02-03N	163999	RF

ILLUSTRATION ITEMS NOT ON PARTS LIST ARE NOT APPLICABLE

- ITEM NOT ILLUSTRATED

BOEING PROPRIETARY - Copyright © - Unpublished Work - See title page for details.

FIG ITEM	PART NUMBER	1 2 3 4 5 6 7 NOMENCLATURE	EFFECT FROM TO	UNITS PER ASSY
2N				
- 4	161T1100-339	STRUT ASSY-SHOCK MLG (PLACARDS AND MARKINGS ONLY) COMPONENT MAINT MANUAL REF: 32-11-40 QUALIFIED I/W DATA: 161T1100-339, -345, -321, -281, -225, -279 MAY REPLACE BUT NOT BE REPLACED BY 161T1100-169, -151, -161, -107, -95 INCLUDE BE-CU PARTS WITH CUSTOMER APPROVAL 161T1100-339, -345, -321, -281, -225 ARE I/W 161T1100-343, -323, -277 INCLUDE BE-CU PARTS WITH CUSTOMER APPROVAL 161T1100-397, -361 INCLUDE BE-CU PARTS MAY REPLACE BUT NOT BE REPLACED BY 161T1100-339, -345, -321, -281, -225, -279, -257, -167, -145, -127, -89, -115, -71, -87, -63, -67, -47, -259, -119, -77, -55, -41, -19 WITH CUSTOMER APPROVAL 161T1100-395, -357, -377, -339, -345, -321, -281, -225, -279 -257, -167, -145, -127, -89, -115, -71, -87, -63, -67, -47, -259 T/W 161T1306-2 MAY REPLACE BUT NOT BE REPLACED BY 161T1100-37, -17 T/W 161T1306-1	163999	RF

ILLUSTRATION ITEMS NOT ON PARTS LIST ARE NOT APPLICABLE

- ITEM NOT ILLUSTRATED

BOEING PROPRIETARY - Copyright © - Unpublished Work - See title page for details.

FIG ITEM	PART NUMBER	1 2 3 4 5 6 7 NOMENCLATURE	EFFECT FROM TO	UNITS PER ASSY
2N				
- 5	161T1100-395	STRUT ASSY-SHOCK MLG (PLACARDS AND MARKINGS ONLY) POSITION DATA: LH COMPONENT MAINT MANUAL REF: 32-11-40 QUALIFIED I/W DATA: 161T1100-395, -357, -377, -339, -345, -321, -281, -225, -279 -257, -167, -145, -127, -89, -115, -71, -87, -63, -67, -47, -259 T/W 161T1306-2 MAY REPLACE BUT NOT BE REPLACED BY 161T1100-37, -17 T/W 161T1306-1 FOR NHA/OTHER SYS DET SEE: 32-11-02-03N	163999	RF
- 5	161T1100-395	STRUT ASSY-SHOCK MLG (PLACARDS AND MARKINGS ONLY) COMPONENT MAINT MANUAL REF: 32-11-40 QUALIFIED I/W DATA: 161T1100-395, -357, -377 MAY REPLACE BUT NOT BE REPLACED BY 161T1100-343, -323, -277, -169, -151, -161, -107, -95 INCLUDE BE-CU PARTS WITH CUSTOMER APPROVAL	163999	RF

ILLUSTRATION ITEMS NOT ON PARTS LIST ARE NOT APPLICABLE

- ITEM NOT ILLUSTRATED

BOEING PROPRIETARY - Copyright © - Unpublished Work - See title page for details.

FIG ITEM	PART NUMBER	1 2 3 4 5 6 7 NOMENCLATURE	EFFECT FROM TO	UNITS PER ASSY
2N				
- 6	161T1100-377	STRUT ASSY-SHOCK REWORK MLG (PLACARDS AND MARKINGS ONLY) COMPONENT MAINT MANUAL REF: 32-11-40 QUALIFIED I/W DATA: 161T1100-395, -357, -377 MAY REPLACE BUT NOT BE REPLACED BY 161T1100-343, -323, -277, -169, -151, -161, -107, -95 INCLUDE BE-CU PARTS WITH CUSTOMER APPROVAL 161T1100-395, -357, -377, -339, -345, -321, -281, -225, -279 -257, -167, -145, -127, -89, -115, -71, -87, -63, -67, -47, -259 T/W 161T1306-2 MAY REPLACE BUT NOT BE REPLACED BY 161T1100-37, -17 T/W 161T1306-1 161T1100-397, -361 INCLUDES BE-CU PARTS IS I/W 161T1100-395, -357, -377 WITH CUSTOMER APPROVAL	163999	RF
- 6	161T1100-479	STRUT ASSY-SHOCK MLG (PLACARD AND MARKINGS ONLY) POSITION DATA: LH MISCELLANEOUS DATA: FOR SPARES PROCURE LOWER COMPONENTS COMPONENT MAINT MANUAL REF: 32-11-40 FOR NHA/OTHER SYS DET SEE: 32-11-02-03N	163999	RF

ILLUSTRATION ITEMS NOT ON PARTS LIST ARE NOT APPLICABLE

- ITEM NOT ILLUSTRATED

BOEING PROPRIETARY - Copyright © - Unpublished Work - See title page for details.

FIG ITEM	PART NUMBER	1 2 3 4 5 6 7 NOMENCLATURE	EFFECT FROM TO	UNITS PER ASSY
2N				
- 6	161T1100-465	STRUT ASSY-SHOCK MLG (PLACARD AND MARKINGS ONLY) POSITION DATA: LH MISCELLANEOUS DATA: FOR SPARES PROCURE LOWER COMPONENTS COMPONENT MAINT MANUAL REF: 32-11-40 FOR NHA/OTHER SYS DET SEE: 32-11-02-03N	163999	RF
- 6	161T1100-447	STRUT ASSY-SHOCK MLG PLACARD AND MARKINGS ONLY) POSITION DATA: LH MISCELLANEOUS DATA: FOR SPARES PROCURE LOWER COMPONENTS COMPONENT MAINT MANUAL REF: 32-11-40 FOR NHA/OTHER SYS DET SEE: 32-11-02-03N	163999	RF
- 6	161T1100-445	STRUT ASSY-SHOCK MLG PLACARD AND MARKINGS ONLY) POSITION DATA: LH MISCELLANEOUS DATA: FOR SPARES PROCURE LOWER COMPONENTS COMPONENT MAINT MANUAL REF: 32-11-40 FOR NHA/OTHER SYS DET SEE: 32-11-02-03N	163999	RF
- 6	161T1100-461	STRUT ASSY-SHOCK MLG (PLACARD AND MARKINGS ONLY) POSITION DATA: LH MISCELLANEOUS DATA: FOR SPARES PROCURE LOWER COMPONENTS COMPONENT MAINT MANUAL REF: 32-11-40 FOR NHA/OTHER SYS DET SEE: 32-11-02-03N	163999	RF

ILLUSTRATION ITEMS NOT ON PARTS LIST ARE NOT APPLICABLE

- ITEM NOT ILLUSTRATED

BOEING PROPRIETARY - Copyright © - Unpublished Work - See title page for details.

FIG ITEM	PART NUMBER	1 2 3 4 5 6 7 NOMENCLATURE	EFFECT FROM TO	UNITS PER ASSY
2N				
- 6	161T1100-403	STRUT ASSY-SHOCK MLG (PLACARDS AND MARKINGS ONLY) POSITION DATA: LH MISCELLANEOUS DATA: FOR SPARES PROCURE LOWER COMPONENTS COMPONENT MAINT MANUAL REF: 32-11-40 FOR NHA/OTHER SYS DET SEE: 32-11-02-03N	163999	RF
- 7	015T1504-17	STRUT ASSY-SHOCK MLG (PLACARDS AND MARKINGS ONLY) POSITION DATA: LH COMPONENT MAINT MANUAL REF: 32-11-40 POST ALERT SB: 32A0148R2 FOR NHA/OTHER SYS DET SEE: 32-11-02-03N	163999	RF
- 7	015T1504-21	STRUT ASSY-SHOCK MLG (PLACARDS AND MARKINGS ONLY) POSITION DATA: LH COMPONENT MAINT MANUAL REF: 32-11-40 POST ALERT SB: 32A0148R2 FOR NHA/OTHER SYS DET SEE: 32-11-02-03N	163999	RF
- 7	015T1504-59	STRUT ASSY-SHOCK MLG (PLACARDS AND MARKINGS ONLY) POSITION DATA: LH COMPONENT MAINT MANUAL REF: 32-11-40 POST ALERT SB: 32A0148R2 FOR NHA/OTHER SYS DET SEE: 32-11-02-03N	163999	RF

ILLUSTRATION ITEMS NOT ON PARTS LIST ARE NOT APPLICABLE

- ITEM NOT ILLUSTRATED

BOEING PROPRIETARY - Copyright © - Unpublished Work - See title page for details.

FIG ITEM	PART NUMBER	1 2 3 4 5 6 7 NOMENCLATURE	EFFECT FROM TO	UNITS PER ASSY
2N				
- 7	015T1504-53	STRUT ASSY-SHOCK MLG (PLACARDS AND MARKINGS ONLY) POSITION DATA: LH COMPONENT MAINT MANUAL REF: 32-11-40 POST ALERT SB: 32A0148R2 FOR NHA/OTHER SYS DET SEE: 32-11-02-03N	163999	RF
- 7	015T1504-51	STRUT ASSY-SHOCK MLG (PLACARDS AND MARKINGS ONLY) POSITION DATA: LH COMPONENT MAINT MANUAL REF: 32-11-40 POST ALERT SB: 32A0148R2 FOR NHA/OTHER SYS DET SEE: 32-11-02-03N	163999	RF
- 7	015T1504-61	STRUT ASSY-SHOCK MLG (PLACARDS AND MARKINGS ONLY) POSITION DATA: LH COMPONENT MAINT MANUAL REF: 32-11-40 POST ALERT SB: 32A0148R2 FOR NHA/OTHER SYS DET SEE: 32-11-02-03N	163999	RF
- 7	015T1504-63	STRUT ASSY-SHOCK MLG (PLACARDS AND MARKINGS ONLY) POSITION DATA: LH COMPONENT MAINT MANUAL REF: 32-11-40 POST ALERT SB: 32A0148R2 FOR NHA/OTHER SYS DET SEE: 32-11-02-03N	163999	RF

ILLUSTRATION ITEMS NOT ON PARTS LIST ARE NOT APPLICABLE

- ITEM NOT ILLUSTRATED

BOEING PROPRIETARY - Copyright © - Unpublished Work - See title page for details.

FIG ITEM	PART NUMBER	1 2 3 4 5 6 7 NOMENCLATURE	EFFECT FROM TO	UNITS PER ASSY
2N				
- 7	015T1504-69	STRUT ASSY-SHOCK MLG (PLACARDS AND MARKINGS ONLY) POSITION DATA: LH COMPONENT MAINT MANUAL REF: 32-11-40 POST ALERT SB: 32A0148R2 FOR NHA/OTHER SYS DET SEE: 32-11-02-03N	163999	RF
- 7	015T1504-25	STRUT ASSY-SHOCK MLG (PLACARDS AND MARKINGS ONLY) POSITION DATA: LH COMPONENT MAINT MANUAL REF: 32-11-40 POST ALERT SB: 32A0148R2 FOR NHA/OTHER SYS DET SEE: 32-11-02-03N	163999	RF
- 7	015T1504-33	STRUT ASSY-SHOCK MLG (PLACARDS AND MARKINGS ONLY) POSITION DATA: LH COMPONENT MAINT MANUAL REF: 32-11-40 POST ALERT SB: 32A0148R2 FOR NHA/OTHER SYS DET SEE: 32-11-02-03N	163999	RF
- 7	015T1504-27	STRUT ASSY-SHOCK MLG (PLACARDS AND MARKINGS ONLY) POSITION DATA: LH COMPONENT MAINT MANUAL REF: 32-11-40 ALTERED FROM PART NUMBER: 161T1100-89 POST ALERT SB: 32A0148R2 FOR NHA/OTHER SYS DET SEE: 32-11-02-03N	163999	RF

ILLUSTRATION ITEMS NOT ON PARTS LIST ARE NOT APPLICABLE

- ITEM NOT ILLUSTRATED

BOEING PROPRIETARY - Copyright © - Unpublished Work - See title page for details.

FIG ITEM	PART NUMBER	1 2 3 4 5 6 7 NOMENCLATURE	EFFECT FROM TO	UNITS PER ASSY
2N				
- 10	161T1100-358	STRUT ASSY-SHOCK MLG (PLACARDS AND MARKINGS ONLY) POSITION DATA: RH COMPONENT MAINT MANUAL REF: 32-11-40 QUALIFIED I/W DATA: 161T1100-120, -78, -56, -42, -20 T/W 161T1306-2 IS I/W 161T1100-38, -18 T/W 161T1306-1 161T1100-398, -362 INCLUDE BE-CU PARTS MAY REPLACE BUT NOT BE REPLACED BY 161T1100-340, -346, -282 -226, -280, -258, -168, -146, -128, -90, -72, -156, -88, -64, -68, -48, -260, -120, -78, -56, -42, -20 WITH CUSTOMER APPROVAL 161T1100-398, -362 INCLUDES BE-CU PARTS IS I/W 161T1100-396, -358, -378 WITH CUSTOMER APPROVAL 161T1100-396, -358, -378 MAY REPLACE BUT NOT BE REPLACED BY 161T1100-344, -324, -278, -170, -152, -162, -108, -96 INCLUDE BE-CU PARTS WITH CUSTOMER APPROVAL FOR NHA/OTHER SYS DET SEE: 32-11-02-03N	163999	RF

ILLUSTRATION ITEMS NOT ON PARTS LIST ARE NOT APPLICABLE

– ITEM NOT ILLUSTRATED

BOEING PROPRIETARY - Copyright © - Unpublished Work - See title page for details.

FIG ITEM	PART NUMBER	1 2 3 4 5 6 7 NOMENCLATURE	EFFECT FROM TO	UNITS PER ASSY
2N				
- 10	161T1100-358	STRUT ASSY-SHOCK MLG (PLACARDS AND MARKINGS ONLY) COMPONENT MAINT MANUAL REF: 32-11-40 QUALIFIED I/W DATA: 161T1100-396, -358, -378 MAY REPLACE BUT NOT BE REPLACED BY 161T1100-344, -324, -278, -170, -152, -162, -108, -96 INCLUDE BE-CU PARTS WITH CUSTOMER APPROVAL	163999	RF
- 10	015T0819-12	STRUT ASSY-SHOCK MLG (PLACARDS AND MARKINGS ONLY) POSITION DATA: RH COMPONENT MAINT MANUAL REF: 32-11-40 POST SERVICE BULLETIN: 32-0145 FOR NHA/OTHER SYS DET SEE: 32-11-02-03N	163999	RF
- 10	015T0819-8	STRUT ASSY-SHOCK MLG (PLACARDS AND MARKINGS ONLY) POSITION DATA: RH COMPONENT MAINT MANUAL REF: 32-11-40 POST SERVICE BULLETIN: 32-0145 FOR NHA/OTHER SYS DET SEE: 32-11-02-03N	163999	RF
- 10	015T1504-40	STRUT ASSY-SHOCK MLG (PLACARDS AND MARKINGS ONLY) POSITION DATA: RH COMPONENT MAINT MANUAL REF: 32-11-40 POST ALERT SB: 32A0148R2 FOR NHA/OTHER SYS DET SEE: 32-11-02-03N	163999	RF

ILLUSTRATION ITEMS NOT ON PARTS LIST ARE NOT APPLICABLE

- ITEM NOT ILLUSTRATED

BOEING PROPRIETARY - Copyright © - Unpublished Work - See title page for details.

FIG ITEM	PART NUMBER	1 2 3 4 5 6 7 NOMENCLATURE	EFFECT FROM TO	UNITS PER ASSY
2N				
- 10	015T1504-48	STRUT ASSY-SHOCK MLG (PLACARDS AND MARKINGS ONLY) POSITION DATA: RH COMPONENT MAINT MANUAL REF: 32-11-40 POST ALERT SB: 32A0148R2 FOR NHA/OTHER SYS DET SEE: 32-11-02-03N	163999	RF
- 10	015T0819-10	STRUT ASSY-SHOCK MLG (PLACARDS AND MARKINGS ONLY) POSITION DATA: RH COMPONENT MAINT MANUAL REF: 32-11-40 POST SERVICE BULLETIN: 32-0145 FOR NHA/OTHER SYS DET SEE: 32-11-02-03N	163999	RF
- 10	015T1504-38	STRUT ASSY-SHOCK MLG (PLACARDS AND MARKINGS ONLY) POSITION DATA: RH COMPONENT MAINT MANUAL REF: 32-11-40 ALTERED FROM PART NUMBER: 161T1100-128 POST ALERT SB: 32A0148	163999	RF

ILLUSTRATION ITEMS NOT ON PARTS LIST ARE NOT APPLICABLE

- ITEM NOT ILLUSTRATED

BOEING PROPRIETARY - Copyright © - Unpublished Work - See title page for details.

FIG ITEM	PART NUMBER	1 2 3 4 5 6 7 NOMENCLATURE	EFFECT FROM TO	UNITS PER ASSY
2N				
- 12	161T1100-282	STRUT ASSY-SHOCK MLG (PLACARDS AND MARKINGS ONLY) POSITION DATA: RH MISCELLANEOUS DATA: FOR SPARES PROCURE LOWER COMPONENTS COMPONENT MAINT MANUAL REF: 32-11-40 QUALIFIED I/W DATA: 161T1100-396, -358, -378, -340, -346, -322, -282, -226, -280, -258, -168, -146, -128, -90, -72, -156, -88, -64, -68, -48, -260 T/W 161T1306-2 MAY REPLACE BUT NOT BE REPLACED BY 161T1100-38, -18 T/W 161T1306-1 161T1100-340, -346, -322, -282, -226, -280 MAY REPLACE BUT NOT BE REPLACED BY 161T1100-170, -152, -162, -108, -96 INCLUDE BE-CU PARTS WITH CUSTOMER APPROVAL FOR NHA/OTHER SYS DET SEE: 32-11-02-03N	163999	RF

ILLUSTRATION ITEMS NOT ON PARTS LIST ARE NOT APPLICABLE

– ITEM NOT ILLUSTRATED

BOEING PROPRIETARY - Copyright © - Unpublished Work - See title page for details.

FIG ITEM	PART NUMBER	1 2 3 4 5 6 7 NOMENCLATURE	EFFECT FROM TO	UNITS PER ASSY
2N				
- 12	161T1100-282	STRUT ASSY-SHOCK MLG (PLACARDS AND MARKINGS ONLY) COMPONENT MAINT MANUAL REF: 32-11-40 QUALIFIED I/W DATA: 161T1100-340, -346, -322, -282, -226, -280 MAY REPLACE BUT NOT BE REPLACED BY 161T1100-170, -152, -162, -108, -96 INCLUDE BE-CU PARTS WITH CUSTOMER APPROVAL 161T1100-340, -346, -322, -282, -226 ARE I/W 161T1100-344, -324, -278 INCLUDE BE-CU PARTS WITH CUSTOMER APPROVAL 161T1100-398, -362 INCLUDE BE-CU PARTS MAY REPLACE BUT NOT BE REPLACED BY 161T1100-340, -346, -322, -282, -226, -280, -258, -168, -146, -128, -90, -72, -156, -88, -64, -68, -48, -260, -120, -78, -56, -42, -20 WITH CUSTOMER APPROVAL	163999	RF

ILLUSTRATION ITEMS NOT ON PARTS LIST ARE NOT APPLICABLE

– ITEM NOT ILLUSTRATED

BOEING PROPRIETARY - Copyright © - Unpublished Work - See title page for details.

FIG ITEM	PART NUMBER	1 2 3 4 5 6 7 NOMENCLATURE	EFFECT FROM TO	UNITS PER ASSY
2N				
- 12	161T1100-322	STRUT ASSY-SHOCK MLG (PLACARDS AND MARKINGS ONLY) POSITION DATA: RH MISCELLANEOUS DATA: FOR SPARES PROCURE LOWER COMPONENTS COMPONENT MAINT MANUAL REF: 32-11-40 QUALIFIED I/W DATA: 161T1100-396, -358, -378, -340, -346, -322, -282, -226, -280, -258, -168, -146, -128, -90, -72, -156, -88, -64, -68, -48, -260 T/W 161T1306-2 MAY REPLACE BUT NOT BE REPLACED BY 161T1100-38, -18 T/W 161T1306-1 161T1100-340, -346, -322, -282, -226, -280 MAY REPLACE BUT NOT BE REPLACED BY 161T1100-170, -152, -162, -108, -96 INCLUDE BE-CU PARTS WITH CUSTOMER APPROVAL FOR NHA/OTHER SYS DET SEE: 32-11-02-03N	163999	RF

ILLUSTRATION ITEMS NOT ON PARTS LIST ARE NOT APPLICABLE

– ITEM NOT ILLUSTRATED

BOEING PROPRIETARY - Copyright © - Unpublished Work - See title page for details.

FIG ITEM	PART NUMBER	1 2 3 4 5 6 7 NOMENCLATURE	EFFECT FROM TO	UNITS PER ASSY
2N				
- 12	161T1100-322	STRUT ASSY-SHOCK MLG (PLACARDS AND MARKINGS ONLY) COMPONENT MAINT MANUAL REF: 32-11-40 QUALIFIED I/W DATA: 161T1100-340, -346, -322, -282, -226, -280 MAY REPLACE BUT NOT BE REPLACED BY 161T1100-170, -152, -162, -108, -96 INCLUDE BE-CU PARTS WITH CUSTOMER APPROVAL 161T1100-340, -346, -322, -282, -226 ARE I/W 161T1100-344, -324, -278 INCLUDE BE-CU PARTS WITH CUSTOMER APPROVAL 161T1100-398, -362 INCLUDE BE-CU PARTS MAY REPLACE BUT NOT BE REPLACED BY 161T1100-340, -346, -322, -282, -226, -280, -258, -168, -146, -128, -90, -72, -156, -88, -64, -68, -48, -260, -120, -78, -56, -42, -20 WITH CUSTOMER APPROVAL	163999	RF

ILLUSTRATION ITEMS NOT ON PARTS LIST ARE NOT APPLICABLE

– ITEM NOT ILLUSTRATED

BOEING PROPRIETARY - Copyright © - Unpublished Work - See title page for details.

FIG ITEM	PART NUMBER	1 2 3 4 5 6 7 NOMENCLATURE	EFFECT FROM TO	UNITS PER ASSY
2N				
- 12	161T1100-378	STRUT ASSY-SHOCK REWORK MLG (PLACARDS AND MARKINGS ONLY) POSITION DATA: RH COMPONENT MAINT MANUAL REF: 32-11-40 QUALIFIED I/W DATA: 161T1100-396, -358, -378, -340, -346, -322, -282, -226, -280, -258, -168, -146, -128, -90, -72, -156, -88, -64, -68, -48, -260 T/W 161T1306-2 MAY REPLACE BUT NOT BE REPLACED BY 161T1100-38, -18 T/W 161T1306-1 161T1100-396, -358, -378 MAY REPLACE BUT NOT BE REPLACED BY 161T1100-344, -324, -278, -170, -152, -162, -108, -96 INCLUDE BE-CU PARTS WITH CUSTOMER APPROVAL POST ALERT SB: 32A0148R2 FOR NHA/OTHER SYS DET SEE: 32-11-02-03N	163999	RF
- 12	161T1100-378	STRUT ASSY-SHOCK REWORK MLG (PLACARDS AND MARKINGS ONLY) COMPONENT MAINT MANUAL REF: 32-11-40 QUALIFIED I/W DATA: 161T1100-396, -358, -378 MAY REPLACE BUT NOT BE REPLACED BY 161T1100-344, -324, -278, -170, -152, -162, -108, -96 INCLUDE BE-CU PARTS WITH CUSTOMER APPROVAL 161T1100-398, -362 INCLUDES BE-CU PARTS IS I/W 161T1100-396, -358, -378 WITH CUSTOMER APPROVAL	163999	RF

ILLUSTRATION ITEMS NOT ON PARTS LIST ARE NOT APPLICABLE

- ITEM NOT ILLUSTRATED

BOEING PROPRIETARY - Copyright © - Unpublished Work - See title page for details.

FIG ITEM	PART NUMBER	1 2 3 4 5 6 7 NOMENCLATURE	EFFECT FROM TO	UNITS PER ASSY
2N				
- 12	161T1100-346	STRUT ASSY-SHOCK MLG (PLACARDS AND MARKINGS ONLY) POSITION DATA: RH MISCELLANEOUS DATA: FOR SPARES PROCURE LOWER COMPONENTS COMPONENT MAINT MANUAL REF: 32-11-40 QUALIFIED I/W DATA: 161T1100-396, -358, -378, -340, -346, -322, -282, -226, -280, -258, -168, -146, -128, -90, -72, -156, -88, -64, -68, -48, -260 T/W 161T1306-2 MAY REPLACE BUT NOT BE REPLACED BY 161T1100-38, -18 T/W 161T1306-1 161T1100-340, -346, -322, -282, -226, -280 MAY REPLACE BUT NOT BE REPLACED BY 161T1100-170, -152, -162, -108, -96 INCLUDE BE-CU PARTS WITH CUSTOMER APPROVAL FOR NHA/OTHER SYS DET SEE: 32-11-02-03N	163999	RF

ILLUSTRATION ITEMS NOT ON PARTS LIST ARE NOT APPLICABLE

– ITEM NOT ILLUSTRATED

BOEING PROPRIETARY - Copyright © - Unpublished Work - See title page for details.

FIG ITEM	PART NUMBER	1 2 3 4 5 6 7 NOMENCLATURE	EFFECT FROM TO	UNITS PER ASSY
2N				
- 12	161T1100-346	STRUT ASSY-SHOCK MLG (PLACARDS AND MARKINGS ONLY) COMPONENT MAINT MANUAL REF: 32-11-40 QUALIFIED I/W DATA: 161T1100-340, -346, -322, -282, -226, -280 MAY REPLACE BUT NOT BE REPLACED BY 161T1100-170, -152, -162, -108, -96 INCLUDE BE-CU PARTS WITH CUSTOMER APPROVAL 161T1100-340, -346, -322, -282, -226 ARE I/W 161T1100-344, -324, -278 INCLUDE BE-CU PARTS WITH CUSTOMER APPROVAL 161T1100-398, -362 INCLUDE BE-CU PARTS MAY REPLACE BUT NOT BE REPLACED BY 161T1100-340, -346, -322, -282, -226, -280, -258, -168, -146, -128, -90, -72, -156, -88, -64, -68, -48, -260, -120, -78, -56, -42, -20 WITH CUSTOMER APPROVAL	163999	RF

ILLUSTRATION ITEMS NOT ON PARTS LIST ARE NOT APPLICABLE

– ITEM NOT ILLUSTRATED

BOEING PROPRIETARY - Copyright © - Unpublished Work - See title page for details.

FIG ITEM	PART NUMBER	1 2 3 4 5 6 7 NOMENCLATURE	EFFECT FROM TO	UNITS PER ASSY
2N				
- 12	161T1100-340	STRUT ASSY-SHOCK MLG (PLACARDS AND MARKINGS ONLY) POSITION DATA: RH MISCELLANEOUS DATA: FOR SPARES PROCURE LOWER COMPONENTS COMPONENT MAINT MANUAL REF: 32-11-40 QUALIFIED I/W DATA: 161T1100-396, -358, -378, -340, -346, -322, -282, -226, -280, -258, -168, -146, -128, -90, -72, -156, -88, -64, -68, -48, -260 T/W 161T1306-2 MAY REPLACE BUT NOT BE REPLACED BY 161T1100-38, -18 T/W 161T1306-1 161T1100-340, -346, -322, -282, -226, -280 MAY REPLACE BUT NOT BE REPLACED BY 161T1100-170, -152, -162, -108, -96 INCLUDE BE-CU PARTS WITH CUSTOMER APPROVAL FOR NHA/OTHER SYS DET SEE: 32-11-02-03N	163999	RF

ILLUSTRATION ITEMS NOT ON PARTS LIST ARE NOT APPLICABLE

– ITEM NOT ILLUSTRATED

BOEING PROPRIETARY - Copyright © - Unpublished Work - See title page for details.

FIG ITEM	PART NUMBER	1 2 3 4 5 6 7 NOMENCLATURE	EFFECT FROM TO	UNITS PER ASSY
2N				
- 12	161T1100-340	STRUT ASSY-SHOCK MLG (PLACARDS AND MARKINGS ONLY) COMPONENT MAINT MANUAL REF: 32-11-40 QUALIFIED I/W DATA: 161T1100-340, -346, -322, -282, -226, -280 MAY REPLACE BUT NOT BE REPLACED BY 161T1100-170, -152, -162, -108, -96 INCLUDE BE-CU PARTS WITH CUSTOMER APPROVAL 161T1100-340, -346, -322, -282, -226 ARE I/W 161T1100-344, -324, -278 INCLUDE BE-CU PARTS WITH CUSTOMER APPROVAL 161T1100-398, -362 INCLUDE BE-CU PARTS MAY REPLACE BUT NOT BE REPLACED BY 161T1100-340, -346, -322, -282, -226, -280, -258, -168, -146, -128, -90, -72, -156, -88, -64, -68, -48, -260, -120, -78, -56, -42, -20 WITH CUSTOMER APPROVAL	163999	RF
- 13	161T1100-446	STRUT ASSY-SHOCK MLG (PLACARDS AND MARKINGS ONLY) POSITION DATA: RH COMPONENT MAINT MANUAL REF: 32-11-40 FOR NHA/OTHER SYS DET SEE: 32-11-02-03N	163999	RF

ILLUSTRATION ITEMS NOT ON PARTS LIST ARE NOT APPLICABLE

- ITEM NOT ILLUSTRATED

BOEING PROPRIETARY - Copyright © - Unpublished Work - See title page for details.

FIG ITEM	PART NUMBER	1 2 3 4 5 6 7 NOMENCLATURE	EFFECT FROM TO	UNITS PER ASSY
2N				
- 13	161T1100-396	STRUT ASSY-SHOCK MLG (PLACARDS AND MARKINGS ONLY) POSITION DATA: RH COMPONENT MAINT MANUAL REF: 32-11-40 QUALIFIED I/W DATA: 161T1100-396, -358, -378, -340, -346, -322, -282, -226, -280, -258, -168, -146, -128, -90, -72, -156, -88, -64, -68, -48, -260 T/W 161T1306-2 MAY REPLACE BUT NOT BE REPLACED BY 161T1100-38, -18 T/W 161T1306-1 161T1100-396, -358, -378 MAY REPLACE BUT NOT BE REPLACED BY 161T1100-344, -324, -278, -170, -152, -162, -108, -96 INCLUDE BE-CU PARTS WITH CUSTOMER APPROVAL FOR NHA/OTHER SYS DET SEE: 32-11-02-03N	163999	RF
- 13	161T1100-396	STRUT ASSY-SHOCK MLG (PLACARDS AND MARKINGS ONLY) COMPONENT MAINT MANUAL REF: 32-11-40 QUALIFIED I/W DATA: 161T1100-396, -358, -378 MAY REPLACE BUT NOT BE REPLACED BY 161T1100-344, -324, -278, -170, -152, -162, -108, -96 INCLUDE BE-CU PARTS WITH CUSTOMER APPROVAL 161T1100-398, -362 INCLUDES BE-CU PARTS IS I/W 161T1100-396, -358, -378 WITH CUSTOMER APPROVAL	163999	RF

ILLUSTRATION ITEMS NOT ON PARTS LIST ARE NOT APPLICABLE

- ITEM NOT ILLUSTRATED

BOEING PROPRIETARY - Copyright © - Unpublished Work - See title page for details.

FIG ITEM	PART NUMBER	1 2 3 4 5 6 7 NOMENCLATURE	EFFECT FROM TO	UNITS PER ASSY
2N				
- 13	161T1100-340	STRUT ASSY-SHOCK MLG (PLACARDS AND MARKINGS ONLY) POSITION DATA: RH MISCELLANEOUS DATA: FOR SPARES PROCURE LOWER COMPONENTS COMPONENT MAINT MANUAL REF: 32-11-40	163999	RF
- 13	161T1100-480	STRUT ASSY-SHOCK MLG (PLACARDS AND MARKINGS ONLY) POSITION DATA: RH COMPONENT MAINT MANUAL REF: 32-11-40 FOR NHA/OTHER SYS DET SEE: 32-11-02-03N	163999	RF
- 13	161T1100-466	STRUT ASSY-SHOCK MLG (PLACARDS AND MARKINGS ONLY) POSITION DATA: RH COMPONENT MAINT MANUAL REF: 32-11-40 FOR NHA/OTHER SYS DET SEE: 32-11-02-03N	163999	RF
- 13	161T1100-448	STRUT ASSY-SHOCK MLG (PLACARDS AND MARKINGS ONLY) POSITION DATA: RH COMPONENT MAINT MANUAL REF: 32-11-40 FOR NHA/OTHER SYS DET SEE: 32-11-02-03N	163999	RF
- 13	161T1100-462	STRUT ASSY-SHOCK MLG (PLACARDS AND MARKINGS ONLY) POSITION DATA: RH COMPONENT MAINT MANUAL REF: 32-11-40 FOR NHA/OTHER SYS DET SEE: 32-11-02-03N	163999	RF

ILLUSTRATION ITEMS NOT ON PARTS LIST ARE NOT APPLICABLE

- ITEM NOT ILLUSTRATED

BOEING PROPRIETARY - Copyright © - Unpublished Work - See title page for details.

FIG ITEM	PART NUMBER	1 2 3 4 5 6 7 NOMENCLATURE	EFFECT FROM TO	UNITS PER ASSY
2N				
- 13	161T1100-404	STRUT ASSY-SHOCK MLG (PLACARDS AND MARKINGS ONLY) POSITION DATA: RH COMPONENT MAINT MANUAL REF: 32-11-40 FOR NHA/OTHER SYS DET SEE: 32-11-02-03N	163999	RF
- 13	015T1504-28	STRUT ASSY-SHOCK MLG (PLACARDS AND MARKINGS ONLY) POSITION DATA: RH COMPONENT MAINT MANUAL REF: 32-11-40 ALTERED FROM PART NUMBER: 161T1100-90 POST ALERT SB: 32A0148R2 FOR NHA/OTHER SYS DET SEE: 32-11-02-03N	163999	RF
- 13	015T1504-60	STRUT ASSY-SHOCK MLG (PLACARDS AND MARKINGS ONLY) POSITION DATA: RH COMPONENT MAINT MANUAL REF: 32-11-40 POST ALERT SB: 32A0148R2 FOR NHA/OTHER SYS DET SEE: 32-11-02-03N	163999	RF
- 13	015T1504-54	STRUT ASSY-SHOCK MLG (PLACARDS AND MARKINGS ONLY) POSITION DATA: RH COMPONENT MAINT MANUAL REF: 32-11-40 POST ALERT SB: 32A0148R2 FOR NHA/OTHER SYS DET SEE: 32-11-02-03N	163999	RF

ILLUSTRATION ITEMS NOT ON PARTS LIST ARE NOT APPLICABLE

- ITEM NOT ILLUSTRATED

BOEING PROPRIETARY - Copyright © - Unpublished Work - See title page for details.

FIG ITEM	PART NUMBER	1 2 3 4 5 6 7 NOMENCLATURE	EFFECT FROM TO	UNITS PER ASSY
2N				
- 14	015T1504-52	STRUT ASSY-SHOCK MLG (PLACARDS AND MARKINGS ONLY) POSITION DATA: RH COMPONENT MAINT MANUAL REF: 32-11-40 POST ALERT SB: 32A0148R2 FOR NHA/OTHER SYS DET SEE: 32-11-02-03N	163999	RF
- 14	015T1504-62	STRUT ASSY-SHOCK MLG (PLACARDS AND MARKINGS ONLY) POSITION DATA: RH COMPONENT MAINT MANUAL REF: 32-11-40 POST ALERT SB: 32A0148R2 FOR NHA/OTHER SYS DET SEE: 32-11-02-03N	163999	RF
- 14	015T1504-64	STRUT ASSY-SHOCK MLG (PLACARDS AND MARKINGS ONLY) POSITION DATA: RH COMPONENT MAINT MANUAL REF: 32-11-40 POST ALERT SB: 32A0148R2 FOR NHA/OTHER SYS DET SEE: 32-11-02-03N	163999	RF
- 14	015T1504-70	STRUT ASSY-SHOCK MLG (PLACARDS AND MARKINGS ONLY) POSITION DATA: RH COMPONENT MAINT MANUAL REF: 32-11-40 POST ALERT SB: 32A0148R2 FOR NHA/OTHER SYS DET SEE: 32-11-02-03N	163999	RF
20	BAC27ELG21	.MARKER-ALUMINUM FOIL	163999	1

ILLUSTRATION ITEMS NOT ON PARTS LIST ARE NOT APPLICABLE

- ITEM NOT ILLUSTRATED

BOEING PROPRIETARY - Copyright © - Unpublished Work - See title page for details.

FIG ITEM	PART NUMBER	1 2 3 4 5 6 7 NOMENCLATURE	EFFECT FROM TO	UNITS PER ASSY
2N				
25	44PB134-4441	.SEAL- SUPPLIER CODE: V00266 SPECIFICATION NUMBER: BACS11AK2	163999	2
30	BACS38E8-37	.STRAP	163999	2

ILLUSTRATION ITEMS NOT ON PARTS LIST ARE NOT APPLICABLE

– ITEM NOT ILLUSTRATED

BOEING PROPRIETARY - Copyright © - Unpublished Work - See title page for details.

FIG ITEM	PART NUMBER	1 2 3 4 5 6 7 NOMENCLATURE	EFFECT FROM TO	UNITS PER ASSY
2N				
35	162T1103-1	.NAMEPLATE-	163999	1
		USED ON:		
		161T1100-115		
		161T1100-127		
		161T1100-128		
		161T1100-145		
		161T1100-146		
		161T1100-226		
		161T1100-257		
		161T1100-258		
		161T1100-259		
		161T1100-260		
		161T1100-279		
		161T1100-280		
		161T1100-281		
		161T1100-282		
		161T1100-321		
		161T1100-322		
		161T1100-339		
		161T1100-340		
		161T1100-345		
		161T1100-346		
		161T1100-357		
		161T1100-358		
		161T1100-377		
		161T1100-378		
		161T1100-395		
		161T1100-396		
		161T1100-403		
		161T1100-404		
		161T1100-47		
		161T1100-48		
		161T1100-63		
		161T1100-64		
		161T1100-67		
		161T1100-68		
		161T1100-71		
		161T1100-72		
		161T1100-87		
		161T1100-88		
		161T1100-89		
		161T1100-90		
		POST ALERT SB:		
		32A0148R2		

ILLUSTRATION ITEMS NOT ON PARTS LIST ARE NOT APPLICABLE

— ITEM NOT ILLUSTRATED

BOEING PROPRIETARY - Copyright © - Unpublished Work - See title page for details.

FIG ITEM	PART NUMBER	1 2 3 4 5 6 7 NOMENCLATURE	EFFECT FROM TO	UNITS PER ASSY
2N				
35	162T1103-1	.NAMEPLATE- OPTIONAL PART: 162T1103-2 USED ON: 161T1100-445 161T1100-446 161T1100-447 161T1100-448 161T1100-461 161T1100-462 161T1100-465 161T1100-466 161T1100-479 161T1100-480	163999	1
37	162T1103-2	.NAMEPLATE- OPTIONAL PART: 162T1103-1 USED ON: 161T1100-445 161T1100-446 161T1100-447 161T1100-448 161T1100-461 161T1100-462 161T1100-465 161T1100-466 161T1100-479 161T1100-480	163999	1
40	BAC27TLG12	.MARKER- PLACARD CONTENT: BMS 3-38 OR BMS 3-27 ONLY POST ALERT SB: 32A0192	163999	1
45	BAC27TLG12	.MARKER- PLACARD CONTENT: BMS 3-27 ONLY POST ALERT SB: 32A0148R2 PRE ALERT SB: 32A0192R1	163999	1
50	BAC27TLG13	.MARKER- POSITION DATA: LH SIDE POST ALERT SB: 32A0192	163999	1

ILLUSTRATION ITEMS NOT ON PARTS LIST ARE NOT APPLICABLE

– ITEM NOT ILLUSTRATED

BOEING PROPRIETARY - Copyright © - Unpublished Work - See title page for details.

FIG ITEM	PART NUMBER	1 2 3 4 5 6 7 NOMENCLATURE	EFFECT FROM TO	UNITS PER ASSY
2N				
55	BAC27TLG13	.MARKER- POSITION DATA: LH SIDE POST ALERT SB: 32A0148R2 PRE ALERT SB: 32A0192R1	163999	1
60	BAC27TLG14	.MARKER- POSITION DATA: RH SIDE POST ALERT SB: 32A0192	163999	1
65	BAC27TLG14	.MARKER- POSITION DATA: RH SIDE POST ALERT SB: 32A0148R2 PRE ALERT SB: 32A0192R1	163999	1

ILLUSTRATION ITEMS NOT ON PARTS LIST ARE NOT APPLICABLE

– ITEM NOT ILLUSTRATED

BOEING PROPRIETARY - Copyright © - Unpublished Work - See title page for details.

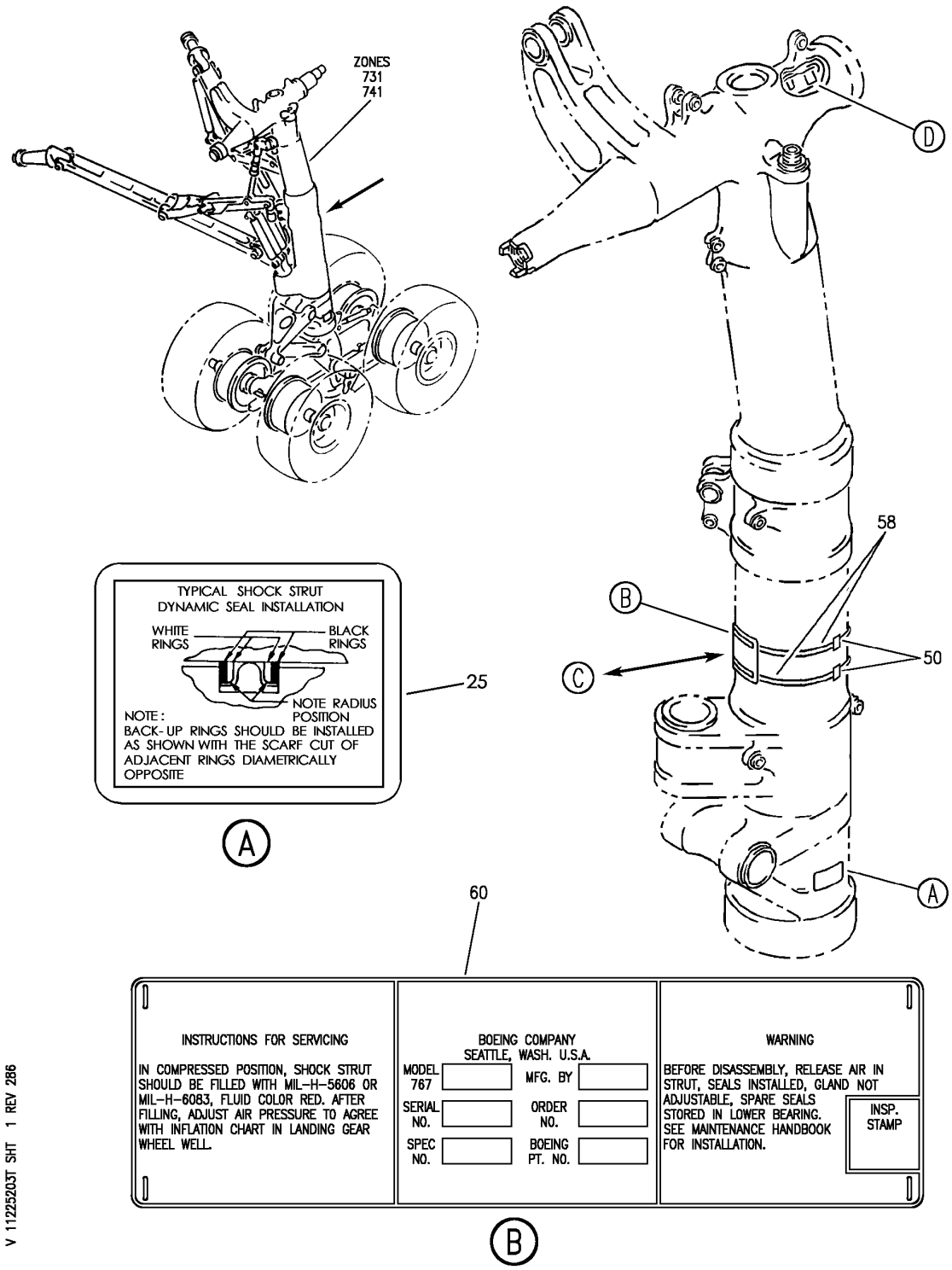

STRUT ASSY- SHOCK MLG (PLACARDS AND MARKINGS ONLY)
FIGURE 3T (SHEET 1)

BOEING PROPRIETARY - Copyright © - Unpublished Work - See title page for details.

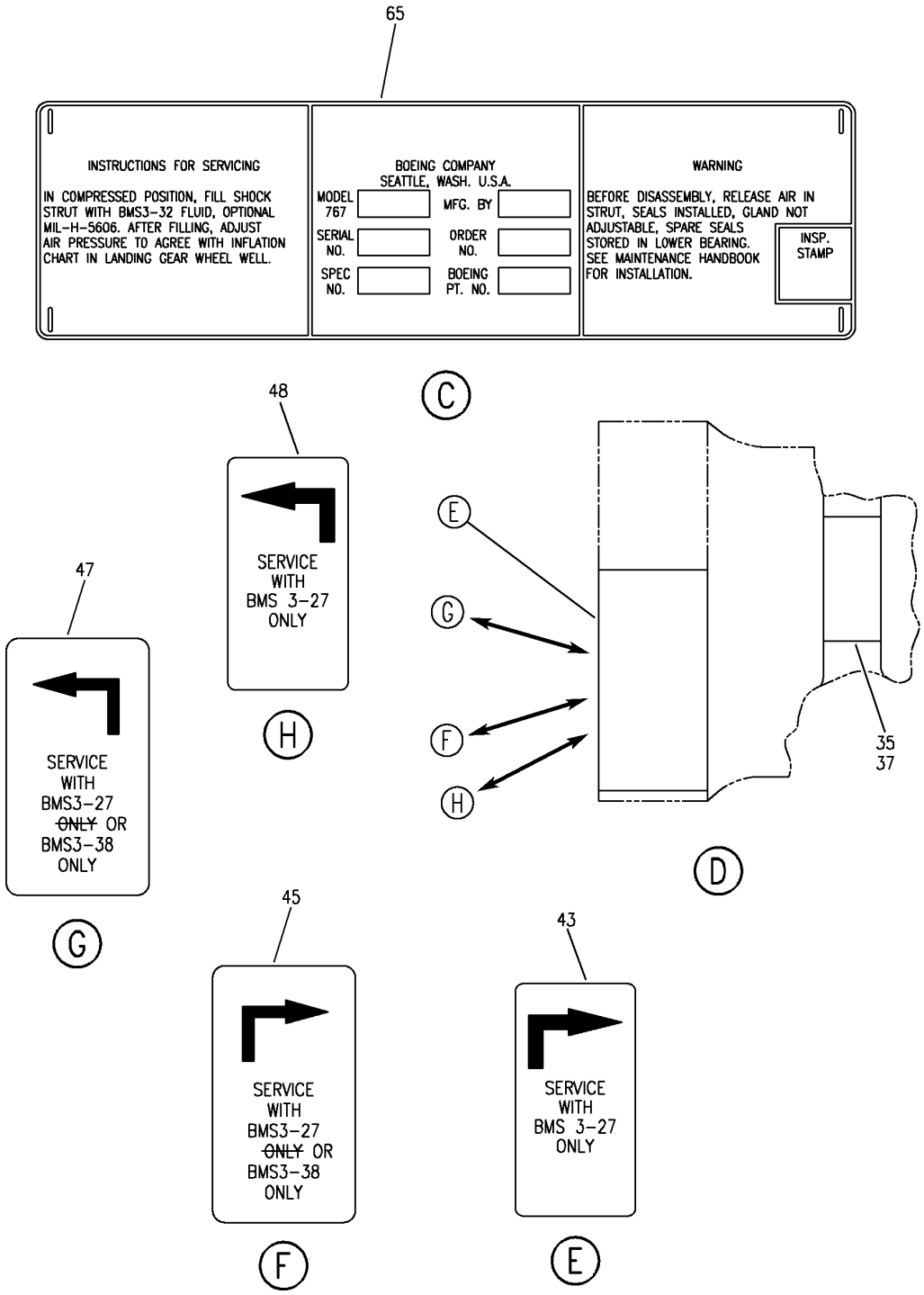

STRUT ASSY- SHOCK MLG (PLACARDS AND MARKINGS ONLY)
FIGURE 3T (SHEET 2)

BOEING PROPRIETARY - Copyright © - Unpublished Work - See title page for details.

FIG ITEM	PART NUMBER	1 2 3 4 5 6 7 NOMENCLATURE	EFFECT FROM TO	UNITS PER ASSY
3T		STRUT ASSY- SHOCK MLG (PLACARDS AND MARKINGS ONLY)	155162	
- 1	161T1100-71	STRUT ASSY-SHOCK MLG (PLACARDS AND MARKINGS ONLY) POSITION DATA: LH COMPONENT MAINT MANUAL REF: 32-11-40 QUALIFIED I/W DATA: 161T1100-395, -357, -377 -339, -345, -321, -281, -225, -279, -257, -167, -145, -127, -89, -115, -71, -87, -63, -67, -47, -259 T/W 161T1306-2 MAY REPLACE BUT NOT BE REPLACED BY 161T1100-37, -17 T/W 161T1306-1 161T1100-397, -361 INCLUDE BE-CU PARTS MAY REPLACE BUT NOT BE REPLACED BY 161T1100 -339, -345, -321, -281, -225, -279, -257, -167, -145, -127, -89, -115, -71, -87, -63, -67, -47, -259, -119, -77, -55, -41, -19 WITH CUSTOMER APPROVAL 161T1100-343, -323, -277 INCLUDE BE-CU PARTS MAY REPLACE BUT NOT REPLACED BY 161T1100-279, -257, -167, -145, -127, -89, -115, -71, -87, -63, -67, -47, -259, -119, -77, -55, -41, -19 WITH CUSTOMER APPROVAL 161T1100-169, -151 INCLUDE BE-CU PARTS MAY REPLACE BUT NOT BE REPLACED BY 161T1100-115 -71, -87, -63, -67, -47, -259, -119, -77, -55, -41, -19 WITH CUSTOMER APPROVAL 161T1100-161, -107, -95,	155162	RF

ILLUSTRATION ITEMS NOT ON PARTS LIST ARE NOT APPLICABLE

– ITEM NOT ILLUSTRATED

BOEING PROPRIETARY - Copyright © - Unpublished Work - See title page for details.

FIG ITEM	PART NUMBER	1 2 3 4 5 6 7 NOMENCLATURE	EFFECT FROM TO	UNITS PER ASSY
3T				
1		INCLUDE BE-CU PARTS IS I/W 161T1100-115, -71 WITH CUSTOMER APPROVAL FOR NHA/OTHER SYS DET SEE: 32-11-02-04T		
- 1	161T1100-71	STRUT ASSY-SHOCK MLG (PLACARDS AND MARKINGS ONLY) COMPONENT MAINT MANUAL REF: 32-11-40 QUALIFIED I/W DATA: 161T1100-395, -357, -377 -339, -345, -321, -281, -225, -279, -257, -167, -145, -127, -89, -115, -71, -87, -63, -67, -47, -259 T/W 161T1306-2 MAY REPLACE BUT NOT BE REPLACED BY 161T1100-37, -17 T/W 161T1306-1	155162	RF

ILLUSTRATION ITEMS NOT ON PARTS LIST ARE NOT APPLICABLE

- ITEM NOT ILLUSTRATED

BOEING PROPRIETARY - Copyright © - Unpublished Work - See title page for details.

FIG ITEM	PART NUMBER	1 2 3 4 5 6 7 NOMENCLATURE	EFFECT FROM TO	UNITS PER ASSY
3T				
- 1	161T1100-89	STRUT ASSY-SHOCK MLG (PLACARDS AND MARKINGS ONLY) POSITION DATA: LH COMPONENT MAINT MANUAL REF: 32-11-40 QUALIFIED I/W DATA: 161T1100-257, -167, -145, -127, -89 MAY REPLACE BUT NOT BE REPLACED BY 161T1100-161, -107, -95 INCLUDE BE-CU PARTS WITH CUSTOMER APPROVAL 161T1100-169, -151 INCLUDE BE-CU PARTS IS I/W 161T1100-257, -167, -145, -127, -89 WITH CUSTOMER APPROVAL 161T1100-343, -323, -277 INCLUDE BE-CU PARTS MAY REPLACE BUT NOT BE REPLACED BY 161T1100-279, -257, -167, -145, -127, -89, -115, -71, -87, -63, -67, -47, -259, -119, -77, -55, -41, -19 WITH CUSTOMER APPROVAL FOR NHA/OTHER SYS DET SEE: 32-11-02-04T	155162	RF

ILLUSTRATION ITEMS NOT ON PARTS LIST ARE NOT APPLICABLE

- ITEM NOT ILLUSTRATED

BOEING PROPRIETARY - Copyright © - Unpublished Work - See title page for details.

FIG ITEM	PART NUMBER	1 2 3 4 5 6 7 NOMENCLATURE	EFFECT FROM TO	UNITS PER ASSY
3T				
- 1	161T1100-127	STRUT ASSY-SHOCK MLG (PLACARDS AND MARKINGS ONLY) POSITION DATA: LH MISCELLANEOUS DATA: FOR SPARES PROCURE LOWER COMPONENTS COMPONENT MAINT MANUAL REF: 32-11-40 QUALIFIED I/W DATA: 161T1100-257, -167, -145, 127, -89 MAY REPLACE BUT NOT BE REPLACED BY 161T1100-161, -107, -95 INCLUDE BE-CU PARTS WITH CUSTOMER APPROVAL 161T1100-395, -357, -377, -339, -345, -321, -281, -225, -279, -257, -167, -145, -127, -89, -115, -71, -87, -63,-67, -47, -259 T/W 161T1306-2 MAY REPLACE BUT NOT BE REPLACED BY 161T1100-37, -17 T/W 161T1306-1 FOR NHA/OTHER SYS DET SEE: 32-11-02-04T	155162	RF

ILLUSTRATION ITEMS NOT ON PARTS LIST ARE NOT APPLICABLE

- ITEM NOT ILLUSTRATED

BOEING PROPRIETARY - Copyright © - Unpublished Work - See title page for details.

FIG ITEM	PART NUMBER	1 2 3 4 5 6 7 NOMENCLATURE	EFFECT FROM TO	UNITS PER ASSY
3T				
- 1	161T1100-145	STRUT ASSY-SHOCK MLG (PLACARDS AND MARKINGS ONLY) POSITION DATA: LH MISCELLANEOUS DATA: FOR SPARES PROCURE LOWER COMPONENTS COMPONENT MAINT MANUAL REF: 32-11-40 QUALIFIED I/W DATA: 161T1100-395, -357, -377, -339, -345, -321, -281, -225, -279, -257, -167, -145, -127, -89, -115, -71, -87, -63, -67, -47, -259 T/W 161T1306-2 MAY REPLACE BUT NOT BE REPLACED BY 161T1100-37, -17 T/W 161T1306-1 161T1100-257, -167, -145, -127, -89 MAY REPLACE BUT NOT BE REPLACED BY 161T1100-161, -107 ,-95, INCLUDE BE-CU PARTS WITH CUSTOMER APPROVAL 161T1100-169, -151 INCLUDE BE-CU PARTS IS I/W 161T1100-257, -167, -145, -127, -89 WITH CUSTOMER APPROVAL FOR NHA/OTHER SYS DET SEE: 32-11-02-04T	155162	RF

ILLUSTRATION ITEMS NOT ON PARTS LIST ARE NOT APPLICABLE

- ITEM NOT ILLUSTRATED

BOEING PROPRIETARY - Copyright © - Unpublished Work - See title page for details.

FIG ITEM	PART NUMBER	1 2 3 4 5 6 7 NOMENCLATURE	EFFECT FROM TO	UNITS PER ASSY
3T				
- 1	161T1100-167	STRUT ASSY-SHOCK MLG (PLACARDS AND MARKINGS ONLY) POSITION DATA: LH MISCELLANEOUS DATA: FOR SPARES PROCURE LOWER COMPONENTS COMPONENT MAINT MANUAL REF: 32-11-40 QUALIFIED I/W DATA: 161T1100-395, -357, -377 -339, -345, -321, -281, -225, -257, -167, -145, -127, -89, -115, -71, -87, -63, -67, -47, -259 T/W 161T1306-2 MAY REPLACE BUT NOT BE REPLACED BY 161T1100-37, -17,T/W 161T1306-1 A61T1100-169, -151 INCLUDE BE-CU PARTS IS I/W 161T1100-257, -167, -145, -127, -89 WITH CUSTOMER APPROVAL 161T1100-169, -151 INCLUDE BE-CU PARTS IS I/W 161T1100-257, -167, -145, -127, -89 WITH CUSTOMER APPROVAL 161T1100-257, -167, -145 -127, -89 MAY REPLACE BUT NOT BE REPLACED BY 161T1100-161, -107, -95 INCLUDE BE-CU PARTS WITH CUSTOMER APPROVAL FOR NHA/OTHER SYS DET SEE: 32-11-02-04T	155162	RF

ILLUSTRATION ITEMS NOT ON PARTS LIST ARE NOT APPLICABLE

- ITEM NOT ILLUSTRATED

BOEING PROPRIETARY - Copyright © - Unpublished Work - See title page for details.

FIG ITEM	PART NUMBER	1 2 3 4 5 6 7 NOMENCLATURE	EFFECT FROM TO	UNITS PER ASSY
3T				
- 1	161T1100-167	STRUT ASSY-SHOCK MLG (PLACARDS AND MARKINGS ONLY) COMPONENT MAINT MANUAL REF: 32-11-40 QUALIFIED I/W DATA: 161T1100-397, -361 INCLUDE BE-CU PARTS MAY REPLACE BUT NOT BE REPLACED BY 161T1100-339, -345, -321 -281, -225, -279, -257, -167, -145, -127, -89, -115, -71, -87, -63, -67, -47, -259, -119, -77, -55, -41, -19 WITH CUSTOMER APPROVAL 161T1100-343, -323, -277 INCLUDE BE-CU PARTS MAY REPLACE BUT NOT BE REPLACED BY 161T1100-279, -257, -167, -145, -127, -89, -115, -71, -87, -63, -67, -47, -259, -119, -77, -55, -41, -19 WITH CUSTOMER APPROVAL	155162	RF

ILLUSTRATION ITEMS NOT ON PARTS LIST ARE NOT APPLICABLE

- ITEM NOT ILLUSTRATED

BOEING PROPRIETARY - Copyright © - Unpublished Work - See title page for details.

FIG ITEM	PART NUMBER	1 2 3 4 5 6 7 NOMENCLATURE	EFFECT FROM TO	UNITS PER ASSY
3T				
- 1	161T1100-357	STRUT ASSY-SHOCK MLG (PLACARDS AND MARKINGS ONLY) POSITION DATA: LH MISCELLANEOUS DATA: FOR SPARES PROCURE LOWER COMPONENTS COMPONENT MAINT MANUAL REF: 32-11-40 QUALIFIED I/W DATA: 161T1100-395, -357, -377 -339, -345, -321, -281, -225, -279, -257, -167, -145, -127, -89, -115, -71, -87, -63, -67, -47, -259 T/W 161T1306-2 MAY REPLACE BUT NOT BE REPLACED BY 161T1100-37, -17 T/W 161T1306-1 161T1100-397, -361 INCLUDES BE-CU PARTS IS I/W 161T1100-395, -357, -377 WITH CUSTOMER APPROVAL 161T1100-395, -357, -377 MAY REPLACE BUT NOT BE REPLACED BY 161T1100-343, -323, -277 -169, -151, -161, -107, -95 INCLUDE BE-CU PARTS WITH CUSTOMER APPROVAL POST ALERT SB: 32A0148 FOR NHA/OTHER SYS DET SEE: 32-11-02-04T	155162	RF

ILLUSTRATION ITEMS NOT ON PARTS LIST ARE NOT APPLICABLE

- ITEM NOT ILLUSTRATED

BOEING PROPRIETARY - Copyright © - Unpublished Work - See title page for details.

FIG ITEM	PART NUMBER	1 2 3 4 5 6 7 NOMENCLATURE	EFFECT FROM TO	UNITS PER ASSY
3T				
- 1	161T1100-63	STRUT ASSY-SHOCK MLG (PLACARDS AND MARKINGS ONLY) POSITION DATA: LH COMPONENT MAINT MANUAL REF: 32-11-40 QUALIFIED I/W DATA: 161T1100-161, -107, -95 INCLUDE BE-CU PARTS MAY REPLACE BUT NOT BE REPLACED BY 161T1100-87, -63, -67, -47, -259, -119, -77, -55, -41, -19 161T1100-169, -151 INCLUDE BE-CU PARTS MAY REPLACE BUT NOT BE REPLACED BY 161T1100-115, -71, -87, -63, -67, -47, -259, -119, -77, -55, -41, -19 WITH CUSTOMER APPROVAL FOR NHA/OTHER SYS DET SEE: 32-11-02-04T	155162	RF

ILLUSTRATION ITEMS NOT ON PARTS LIST ARE NOT APPLICABLE

- ITEM NOT ILLUSTRATED

BOEING PROPRIETARY - Copyright © - Unpublished Work - See title page for details.

FIG ITEM	PART NUMBER	1 2 3 4 5 6 7 NOMENCLATURE	EFFECT FROM TO	UNITS PER ASSY
3T				
- 1	161T1100-87	STRUT ASSY-SHOCK MLG (PLACARDS AND MARKINGS ONLY) POSITION DATA: LH MISCELLANEOUS DATA: FOR SPARES PROCURE LOWER COMPONENTS COMPONENT MAINT MANUAL REF: 32-11-40 QUALIFIED I/W DATA: 161T1100-161, -107, -95 INLCUDE BE-CU PARTS MAY REPLACE BUT NOT BE REPLACED BY 161T1100-87, -63, -67, -47, -259, -119, -77, -55, -41, -19 161T1100-169, -151 INCLUDE BE-CU PARTS MAY REPLACE BUT NOT BE REPLACED BY 161T1100-115, -71, -87, -63, -67, -47, -259, -119, -77, -55, -41, -19 WITH CUSTOMER APPROVAL 161T1100-343, -323, -277 INCLUDE BE-CU PARTS MAY REPLACE BUT NOT BE REPLACED BY 161T1100-279, -257, -167, -145, -127, -89, -115, -71, -87, -63, -67, -47, -259, -119, -77, -55, -41, -19 WITH CUSTOMER APPROVAL FOR NHA/OTHER SYS DET SEE: 32-11-02-04T	155162	RF

ILLUSTRATION ITEMS NOT ON PARTS LIST ARE NOT APPLICABLE

- ITEM NOT ILLUSTRATED

BOEING PROPRIETARY - Copyright © - Unpublished Work - See title page for details.

FIG ITEM	PART NUMBER	1 2 3 4 5 6 7 NOMENCLATURE	EFFECT FROM TO	UNITS PER ASSY
3T				
- 1	161T1100-225	STRUT ASSY-SHOCK MLG (PLACARDS AND MARKINGS ONLY) POSITION DATA: LH MISCELLANEOUS DATA: FOR SPARES PROCURE LOWER COMPONENTS COMPONENT MAINT MANUAL REF: 32-11-40 QUALIFIED I/W DATA: 161T1100-395, -357, -377, -339, -345, -321, -281, -225, -279 -257, -167, -145, -127, -89, -115, -71, -87, -63, -67, -47, -259 T/W 161T1306-2 MAY REPLACE BUT NOT BE REPLACED BY 161T1100-37, -17 T/W 161T1306-1 161T1100-339, -345, -321, -281, -225, -279 MAY REPLACE BUT NOT BE REPLACED BY 161T1100-169, -151, -161, -107, -95 INCLUDE BE-CU PARTS WITH CUSTOMER APPROVAL FOR NHA/OTHER SYS DET SEE: 32-11-02-04T	155162	RF

ILLUSTRATION ITEMS NOT ON PARTS LIST ARE NOT APPLICABLE

- ITEM NOT ILLUSTRATED

BOEING PROPRIETARY - Copyright © - Unpublished Work - See title page for details.

FIG ITEM	PART NUMBER	1 2 3 4 5 6 7 NOMENCLATURE	EFFECT FROM TO	UNITS PER ASSY
3T				
- 1	161T1100-115	STRUT ASSY-SHOCK MLG (PLACARDS AND MARKINGS ONLY) POSITION DATA: LH COMPONENT MAINT MANUAL REF: 32-11-40 QUALIFIED I/W DATA: 161T1100-395, -357, -377, -339, -345, -321, -281, -225, -279 -257, -167, -145, -127, -89, -115, -71, -87, -63, -67, -47, -259 T/W 161T1306-2 MAY REPLACE BUT NOT BE REPLACED BY 161T1100-37, -17 T/W 161T1306-1 161T1100-161, -107, -95 INCLUDE BE-CU PARTS IS I/W 161T1100-115, -71 WITH CUSTOMER APPROVAL 161T1100-169, -151 INCLUDE BE-CU PARTS MAY REPLACE BUT NOT BE REPLACED BY 161T1100-115, -71, -87, -63, -67, -47, -259, -119, -77, -55, -41, -19 WITH CUSTOMER APPROVAL PRE ALERT SB: 32A0148 FOR NHA/OTHER SYS DET SEE: 32-11-02-04T	155162	RF

ILLUSTRATION ITEMS NOT ON PARTS LIST ARE NOT APPLICABLE

- ITEM NOT ILLUSTRATED

BOEING PROPRIETARY - Copyright © - Unpublished Work - See title page for details.

FIG ITEM	PART NUMBER	1 2 3 4 5 6 7 NOMENCLATURE	EFFECT FROM TO	UNITS PER ASSY
3T				
- 2	161T1100-89	STRUT ASSY-SHOCK MLG (PLACARDS AND MARKINGS ONLY) COMPONENT MAINT MANUAL REF: 32-11-40 QUALIFIED I/W DATA: 161T1100-395, -357, -377, -339, -345, -321, -281, -225, -279 -257, -167, -145, -127, -89, -115, -71, -87, -63, -67, -47, -259, T/W 161T1306-2 MAY REPLACE BUT NOT BE REPLACED BY 161T1100-37, -17 T/W 161T1306-1 161T1100-343, -323, -277 INCLUDE BE-CU PARTS MAY REPLACE BUT NOT BE REPLACED BY 161T1100-279, -257, -167, -145, -127, -89, -115, -71, -87, -63, -67, -47, -259, -119, -77, -55, -41, -19 WITH CUSTOMER APPROVAL 161T1100-397, -361 INCLUDE BE-CU PARTS MAY REPLACE BUT NOT BE REPLACED BY 161T1100-339, -345, -321, -281, -225, -279, -257, -167, -145, -127, -89, -115, -71, -87, -63, -67, -47, -259, -119, -77, -55, -41, -19 WITH CUSTOMER APPROVAL	155162	RF

ILLUSTRATION ITEMS NOT ON PARTS LIST ARE NOT APPLICABLE

- ITEM NOT ILLUSTRATED

BOEING PROPRIETARY - Copyright © - Unpublished Work - See title page for details.

FIG ITEM	PART NUMBER	1 2 3 4 5 6 7 NOMENCLATURE	EFFECT FROM TO	UNITS PER ASSY
3T				
- 2	161T1100-127	STRUT ASSY-SHOCK MLG (PLACARDS AND MARKINGS ONLY) COMPONENT MAINT MANUAL REF: 32-11-40 QUALIFIED I/W DATA: 161T1100-169, -151 INCLUDE BE-CU PARTS IS I/W 161T1100-257, -167, -145, -127, -89 WITH CUSTOMER APPROVAL 161T1100-343, -323, -277 INCLUDE BE-CU PARTS MAY REPLACE BUT NOT BE REPLACED BY 161T1100-279, -257, -167, -145, -127, -89, -115, -71, -87, -633, -67, -47, -259, -119, -77, -55, -41, -19 WITH CUSTOMER APPROVAL 161T1100-397, -361 INCLUDE BE-CU PARTS MAY REPLACE BUT NOT BE REPLACED BY 161T1100-339, -345, -321, -281, -225, -279, -257, -167, -145, -127, -89, -115, -71, -87, -63, -67, -47, -259, -119, -77, -55, -41, -19 WITH CUSTOMER APPROVAL	155162	RF

ILLUSTRATION ITEMS NOT ON PARTS LIST ARE NOT APPLICABLE

- ITEM NOT ILLUSTRATED

BOEING PROPRIETARY - Copyright © - Unpublished Work - See title page for details.

FIG ITEM	PART NUMBER	1 2 3 4 5 6 7 NOMENCLATURE	EFFECT FROM TO	UNITS PER ASSY
3T				
- 2	161T1100-145	STRUT ASSY-SHOCK MLG (PLACARDS AND MARKINGS ONLY) COMPONENT MAINT MANUAL REF: 32-11-40 QUALIFIED I/W DATA: 161T1100-257, -167, -145, -127, -89 MAY REPLACE BUT NOT BE REPLACED BY 161T1100-161, -107 ,-95, INCLUDE BE-CU PARTS WITH CUSTOMER APPROVAL 161T1100-343, -323, -277, INCLUDE BE-CU PARTS MAY REPLACE BUT NOT BE REPLACED BY 161T1100-279, -257, -167, -145, -127, -89, -115, -71, -87, -63, -67, -47, -259, -119, -77, -55, -41, -19 WITH CUSTOMER APPROVAL 161T1100-397, -361 INCLUDE BE-CU PARTS MAY REPLACE BUT NOT BE REPLACED BY 161T1100-339, -345, -32, -281, -225, -279, -257, -167, -145, -127, -89, -115, -71, -87, -63, -67, -47, -259, -119, -77, -55, -41, -19 WITH CUSTOMER APPROVAL	155162	RF
- 2	161T1100-357	STRUT ASSY-SHOCK MLG (PLACARDS AND MARKINGS ONLY) COMPONENT MAINT MANUAL REF: 32-11-40 QUALIFIED I/W DATA: 161T1100-339, -345, -321, -281, -225, -279 MAY REPLACE BUT NOT BE REPLACED BY 161T1100-169, -151, -161, -107, -95 INCLUDE BE-CU PARTS WITH CUSTOMER APPROVAL	155162	RF

ILLUSTRATION ITEMS NOT ON PARTS LIST ARE NOT APPLICABLE

- ITEM NOT ILLUSTRATED

BOEING PROPRIETARY - Copyright © - Unpublished Work - See title page for details.

FIG ITEM	PART NUMBER	1 2 3 4 5 6 7 NOMENCLATURE	EFFECT FROM TO	UNITS PER ASSY
3T - 2	161T1100-63	STRUT ASSY-SHOCK MLG (PLACARDS AND MARKINGS ONLY) COMPONENT MAINT MANUAL REF: 32-11-40 QUALIFIED I/W DATA: 161T1100-343, -323, -277 INCLUDE BE-CU PARTS MAY REPLACE BUT NOT BE REPLACED BY 161T1100-279, -257, -167, -145, -127, -89, -115, -71, -87, -63, -67, -47, -259, -119, -77, -55, -41, -19 WITH CUSTOMER APPROVAL 161T1100-397, -361 INCLUDE BE-CU PARTS MAY REPLACE BUT NOT BE REPLACED BY 161T1100-339, -245, -321, -281, -225, -279, -257, -167, -145, -127, -89, -115, -71, -87, -63 -67, -47, -259, -119, -77, -55, -41, -19 WITH CUSTOMER APPROVAL	155162	RF

ILLUSTRATION ITEMS NOT ON PARTS LIST ARE NOT APPLICABLE

– ITEM NOT ILLUSTRATED

BOEING PROPRIETARY - Copyright © - Unpublished Work - See title page for details.

FIG ITEM	PART NUMBER	1 2 3 4 5 6 7 NOMENCLATURE	EFFECT FROM TO	UNITS PER ASSY
3T				
- 2	161T1100-87	STRUT ASSY-SHOCK MLG (PLACARDS AND MARKINGS ONLY) COMPONENT MAINT MANUAL REF: 32-11-40 QUALIFIED I/W DATA: 161T1100-343, -323, -277 INCLUDE BE-CU PARTS MAY REPLACE BUT NOT BE REPLACED BY 161T1100-279, -257, -167, -145, -127, -89, -115, -71, -87, -63, -67, -47, -259, -119, -77, -55, -41, -19 WITH CUSTOMER APPROVAL 161T1100-397, -361 INCLUDE BE-CU PARTS MAY REPLACE BUT NOT BE REPLACED BY 161T1100-339, -345, -321, -281, -225, -279, -257, -167, -145, -127, -89, -115, -71, -87, -63, -67, -47, -259, -119, -77, -55, -41, -19 WITH CUSTOMER APPROVAL 161T1100-395,-357,-377, -339,-345,-321,-281, -225,-279,-257,-167, -145,-127,-89,-115,-71, -87,-63,-67,-47,-259 TOGETHER WITH 161T1306-2 MAY REPLACE BUT NOT BE REPLACED BY 161T1100-37, -17 TOGETHER WITH 161T1306-1	155162	RF

ILLUSTRATION ITEMS NOT ON PARTS LIST ARE NOT APPLICABLE

- ITEM NOT ILLUSTRATED

BOEING PROPRIETARY - Copyright © - Unpublished Work - See title page for details.

FIG ITEM	PART NUMBER	1 2 3 4 5 6 7 NOMENCLATURE	EFFECT FROM TO	UNITS PER ASSY
3T				
- 2	161T1100-225	STRUT ASSY-SHOCK MLG (PLACARDS AND MARKINGS ONLY) COMPONENT MAINT MANUAL REF: 32-11-40 QUALIFIED I/W DATA: 161T1100-339, -345, -321, -281, -225, -279 MAY REPLACE BUT NOT BE REPLACED BY 161T1100-169, -151, -161, -107, -95 INCLUDE BE-CU PARTS WITH CUSTOMER APPROVAL 161T1100-339, -345, -321, -281, -225 ARE I/W 161T1100-343, -323, -277 INCLUDE BE-CU PARTS WITH CUSTOMER APPROVAL 161T1100-397, -361 INCLUDE BE-CU PARTS MAY REPLACE BUT NOT BE REPLACED BY 161T1100-339, -345, -321, -281, -225, -279, -257, -167, -145, -127, -89, -115, -71, -87, -63, -67, -47, -259, -119, -77, -55, -41, -19 WITH CUSTOMER APPROVAL	155162	RF

ILLUSTRATION ITEMS NOT ON PARTS LIST ARE NOT APPLICABLE

- ITEM NOT ILLUSTRATED

BOEING PROPRIETARY - Copyright © - Unpublished Work - See title page for details.

FIG ITEM	PART NUMBER	1 2 3 4 5 6 7 NOMENCLATURE	EFFECT FROM TO	UNITS PER ASSY
3T				
- 2	161T1100-115	STRUT ASSY-SHOCK MLG (PLACARDS AND MARKINGS ONLY) COMPONENT MAINT MANUAL REF: 32-11-40 QUALIFIED I/W DATA: 161T1100-343, -323, -277 INCLUDE BE-CU PARTS MAY REPLACE BUT NOT BE REPLACED BY 161T1100-279, -257, -167, -145, -127, -89, -115, -71, -87, -63, -67, -47, -259, -119, -77, -55, -41, -19 WITH CUSTOMER APPROVAL 161T1100-397, -361 INCLUDE BE-CU PARTS MAY REPLACE BUT NOT BE REPLACED BY 161T1100-339, -345, -321, -281, -225, -279, -257, -167, -145, -127, -89, -115, -71, -87, -63, -67, -47, -259, -119, -77, -55, -41, -19 WITH CUSTOMER APPROVAL	155162	RF

ILLUSTRATION ITEMS NOT ON PARTS LIST ARE NOT APPLICABLE

- ITEM NOT ILLUSTRATED

BOEING PROPRIETARY - Copyright © - Unpublished Work - See title page for details.

FIG ITEM	PART NUMBER	1 2 3 4 5 6 7 NOMENCLATURE	EFFECT FROM TO	UNITS PER ASSY
3T				
- 2	161T1100-257	STRUT ASSY-SHOCK MLG (PLACARDS AND MARKINGS ONLY) POSITION DATA: LH MISCELLANEOUS DATA: FOR SPARES PROCURE LOWER COMPONENTS COMPONENT MAINT MANUAL REF: 32-11-40 QUALIFIED I/W DATA: 161T1100-395, -357, -377, -339, -345, -321, -281, -225, -279 -257, -167, -145, -127, -89, -115, -71, -87, -63, -67, -47, -259 T/W 161T1306-2 MAY REPLACE BUT NOT BE REPLACED BY 161T1100-37, -17 T/W 161T1306-1 161T1100-257, -167, -145, -127, -89 MAY REPLACE BUT NOT BE REPLACED BY 161T1100-161, -107, -95 INCLUDE BE-CU PARTS WITH CUSTOMER APPROVAL FOR NHA/OTHER SYS DET SEE: 32-11-02-04T	155162	RF

ILLUSTRATION ITEMS NOT ON PARTS LIST ARE NOT APPLICABLE

– ITEM NOT ILLUSTRATED

BOEING PROPRIETARY - Copyright © - Unpublished Work - See title page for details.

FIG ITEM	PART NUMBER	1 2 3 4 5 6 7 NOMENCLATURE	EFFECT FROM TO	UNITS PER ASSY
3T				
- 2	161T1100-257	STRUT ASSY-SHOCK MLG (PLACARDS AND MARKINGS ONLY) COMPONENT MAINT MANUAL REF: 32-11-40 QUALIFIED I/W DATA: 161T1100-169, -151 INCLUDE BE-CU PARTS IS I/W 161T1100-257, -167, -145, -127, -89 WITH CUSTOMER APPROVAL 161T1100-257, -167, -145, -127, -89 MAY REPLACE BUT NOT BE REPLACED BY 161T1100-161, -107, -95 INCLUDE BE-CU PARTS WITH CUSTOMER APPROVAL 161T1100-343, -323, -277 INLCUDE BE-CU PARTS MAY REPLACE BUT NOT BE REPLACED BY 161T1100-279, -257, -167, -145, -127, -89, -115, -71, -87, -63, -67, -47, -259, -119, -77, -55, -41, -19 WITH CUSTOMER APPROVAL 161T1100-397, -361 INCLUDE BE-CU PARTS MAY REPLACE BUT NOT BE REPLACED BY 161T1100-339, -345, -321, -281, -225, -279, -257, -167, -145, -127, -89, -115, -71, -87, -63, -67, -47, -259, -119,- 77, -55, -41, -19 WITH CUSTOMER APPROVAL	155162	RF

ILLUSTRATION ITEMS NOT ON PARTS LIST ARE NOT APPLICABLE

- ITEM NOT ILLUSTRATED

BOEING PROPRIETARY - Copyright © - Unpublished Work - See title page for details.

FIG ITEM	PART NUMBER	1 2 3 4 5 6 7 NOMENCLATURE	EFFECT FROM TO	UNITS PER ASSY
3T				
- 2	161T1100-281	STRUT ASSY-SHOCK MLG (PLACARDS AND MARKINGS ONLY) POSITION DATA: LH MISCELLANEOUS DATA: FOR SPARES PROCURE LOWER COMPONENTS COMPONENT MAINT MANUAL REF: 32-11-40 QUALIFIED I/W DATA: 161T1100-395, -357, -377, -339, -345, -321, -281, -225, -279 -257, -167, -145, -127, -89, -115, -71, -87, -63, -67, -47, -259 T/W 161T1306-2 MAY REPLACE BUT NOT BE REPLACED BY 161T1100-37, -17 T/W 161T1306-1 161T1100-339, -345, -321, -281, -225 ARE I/W 161T1100-343, -323, -277 INCLUDE BE-CU PARTS WITH CUSTOMER APPROVAL 161T1100-339, -345, -321, -281, -225, -279 MAY REPLACE BUT NOT BE REPLACED BY 161T1100-169, -151, -161, -107, -95 INCLUDE BE-CU PARTS WITH CUSTOMER APPROVAL FOR NHA/OTHER SYS DET SEE: 32-11-02-04T	155162	RF

ILLUSTRATION ITEMS NOT ON PARTS LIST ARE NOT APPLICABLE

- ITEM NOT ILLUSTRATED

BOEING PROPRIETARY - Copyright © - Unpublished Work - See title page for details.

FIG ITEM	PART NUMBER	1 2 3 4 5 6 7 NOMENCLATURE	EFFECT FROM TO	UNITS PER ASSY
3T				
- 2	161T1100-281	STRUT ASSY-SHOCK MLG (PLACARDS AND MARKINGS ONLY) COMPONENT MAINT MANUAL REF: 32-11-40 QUALIFIED I/W DATA: 161T1100-339, -345, -321, -281, -225, -279 MAY REPLACE BUT NOT BE REPLACED BY 161T1100-169, -151, -161, -107, -95 INCLUDE BE-CU PARTS WITH CUSTOMER APPROVAL 161T1100-339, -345, -321, -281, -225 ARE I/W 161T1100-343, -323, -277 INCLUDE BE-CU PARTS WITH CUSTOMER APPROVAL 161T1100-397, -361 INCLUDE BE-CU PARTS MAY REPLACE BUT NOT BE REPLACED BY 161T1100-339, -345, -321, -281, -225, -279, -257, -167, -145, -127, -89, -115, -71, -87, -63, -67, -47, -259, -119, -77, -55, -41, -19 WITH CUSTOMER APPROVAL	155162	RF

ILLUSTRATION ITEMS NOT ON PARTS LIST ARE NOT APPLICABLE

- ITEM NOT ILLUSTRATED

BOEING PROPRIETARY - Copyright © - Unpublished Work - See title page for details.

FIG ITEM	PART NUMBER	1 2 3 4 5 6 7 NOMENCLATURE	EFFECT FROM TO	UNITS PER ASSY
3T				
- 3	161T1100-321	STRUT ASSY-SHOCK MLG (PLACARDS AND MARKINGS ONLY) POSITION DATA: LH MISCELLANEOUS DATA: FOR SPARES PROCURE LOWER COMPONENTS COMPONENT MAINT MANUAL REF: 32-11-40 QUALIFIED I/W DATA: 161T1100-395, -357, -377, -339, -345, -321, -281, -225, -279 -257, -167, -145, -127, -89, -115, -71, -87, -63, -67, -47, -259 T/W 161T1306-2 MAY REPLACE BUT NOT BE REPLACED BY 161T1100-37, -17 T/W 161T1306-1 161T1100-339, -345, -321, -281, -225 ARE I/W 161T1100-343, -323, -277 INCLUDE BE-CU PARTS WITH CUSTOMER APPROVAL 161T1100-339, -345, -321, -281, -225, -279 MAY REPLACE BUT NOT BE REPLACED BY 161T1100-169, -151, -161, -107, -95 INCLUDE BE-CU PARTS WITH CUSTOMER APPROVAL FOR NHA/OTHER SYS DET SEE: 32-11-02-04T	155162	RF

ILLUSTRATION ITEMS NOT ON PARTS LIST ARE NOT APPLICABLE

- ITEM NOT ILLUSTRATED

BOEING PROPRIETARY - Copyright © - Unpublished Work - See title page for details.

FIG ITEM	PART NUMBER	1 2 3 4 5 6 7 NOMENCLATURE	EFFECT FROM TO	UNITS PER ASSY
3T				
- 3	161T1100-321	STRUT ASSY-SHOCK MLG (PLACARDS AND MARKINGS ONLY) COMPONENT MAINT MANUAL REF: 32-11-40 QUALIFIED I/W DATA: 161T1100-339, -345, -321, -281, -225, -279 MAY REPLACE BUT NOT BE REPLACED BY 161T1100-169, -151, -161, -107, -95 INCLUDE BE-CU PARTS WITH CUSTOMER APPROVAL 161T1100-339, -345, -321, -281, -225 ARE I/W 161T1100-343, -323, -277 INCLUDE BE-CU PARTS WITH CUSTOMER APPROVAL 161T1100-397, -361 INCLUDE BE-CU PARTS MAY REPLACE BUT NOT BE REPLACED BY 161T1100-339, -345, -321, -281, -225, -279, -257, -167, -145, -127, -89, -115, -71, -87, -63, -67, -47, -259, -119, -77, -55, -41, -19 WITH CUSTOMER APPROVAL	155162	RF

ILLUSTRATION ITEMS NOT ON PARTS LIST ARE NOT APPLICABLE

- ITEM NOT ILLUSTRATED

BOEING PROPRIETARY - Copyright © - Unpublished Work - See title page for details.

FIG ITEM	PART NUMBER	1 2 3 4 5 6 7 NOMENCLATURE	EFFECT FROM TO	UNITS PER ASSY
3T				
- 3	161T1100-339	STRUT ASSY-SHOCK MLG (PLACARDS AND MARKINGS ONLY) POSITION DATA: LH MISCELLANEOUS DATA: FOR SPARES PROCURE LOWER COMPONENTS COMPONENT MAINT MANUAL REF: 32-11-40 QUALIFIED I/W DATA: 161T1100-395, -357, -377, -339, -345, -321, -281, -225, -279 -257, -167, -145, -127, -89, -115, -71, -87, -63, -67, -47, -259 T/W 161T1306-2 MAY REPLACE BUT NOT BE REPLACED BY 161T1100-37, -17 T/W 161T1306-1 161T1100-339, -345, -321, -281, -225, -279 MAY REPLACE BUT NOT BE REPLACED BY 161T1100-169, -151, -161, -107, -95 INCLUDE BE-CU PARTS WITH CUSTOMER APPROVAL FOR NHA/OTHER SYS DET SEE: 32-11-02-04T	155162	RF

ILLUSTRATION ITEMS NOT ON PARTS LIST ARE NOT APPLICABLE

- ITEM NOT ILLUSTRATED

BOEING PROPRIETARY - Copyright © - Unpublished Work - See title page for details.

FIG ITEM	PART NUMBER	1 2 3 4 5 6 7 NOMENCLATURE	EFFECT FROM TO	UNITS PER ASSY
3T				
- 3	161T1100-339	STRUT ASSY-SHOCK MLG (PLACARDS AND MARKINGS ONLY) COMPONENT MAINT MANUAL REF: 32-11-40 QUALIFIED I/W DATA: 161T1100-339, -345, -321, -281, -225, -279 MAY REPLACE BUT NOT BE REPLACED BY 161T1100-169, -151, -161, -107, -95 INCLUDE BE-CU PARTS WITH CUSTOMER APPROVAL 161T1100-339, -345, -321, -281, -225 ARE I/W 161T1100-343, -323, -277 INCLUDE BE-CU PARTS WITH CUSTOMER APPROVAL 161T1100-397, -361 INCLUDE BE-CU PARTS MAY REPLACE BUT NOT BE REPLACED BY 161T1100-339, -345, -321, -281, -225, -279, -257, -167, -145, -127, -89, -115, -71, -87, -63, -67, -47, -259, -119, -77, -55, -41, -19 WITH CUSTOMER APPROVAL	155162	RF

ILLUSTRATION ITEMS NOT ON PARTS LIST ARE NOT APPLICABLE

- ITEM NOT ILLUSTRATED

BOEING PROPRIETARY - Copyright © - Unpublished Work - See title page for details.

FIG ITEM	PART NUMBER	1 2 3 4 5 6 7 NOMENCLATURE	EFFECT FROM TO	UNITS PER ASSY
3T				
- 3	161T1100-345	STRUT ASSY-SHOCK MLG (PLACARDS AND MARKINGS ONLY) POSITION DATA: LH MISCELLANEOUS DATA: FOR SPARES PROCURE LOWER COMPONENTS COMPONENT MAINT MANUAL REF: 32-11-40 QUALIFIED I/W DATA: 161T1100-395, -357, -377, -339, -345, -321, -281, -225, -279 -257, -167, -145, -127, -89, -115, -71, -87, -63, -67, -47, -259 T/W 161T1306-2 MAY REPLACE BUT NOT BE REPLACED BY 161T1100-37, -17 T/W 161T1306-1 161T1100-339, -345, -321, -281, -225, -279 MAY REPLACE BUT NOT BE REPLACED BY 161T1100-169, -151, -161, -107, -95 INCLUDE BE-CU PARTS WITH CUSTOMER APPROVAL FOR NHA/OTHER SYS DET SEE: 32-11-02-04T	155162	RF

ILLUSTRATION ITEMS NOT ON PARTS LIST ARE NOT APPLICABLE

- ITEM NOT ILLUSTRATED

BOEING PROPRIETARY - Copyright © - Unpublished Work - See title page for details.

FIG ITEM	PART NUMBER	1 2 3 4 5 6 7 NOMENCLATURE	EFFECT FROM TO	UNITS PER ASSY
3T				
- 3	161T1100-345	STRUT ASSY-SHOCK MLG (PLACARDS AND MARKINGS ONLY) COMPONENT MAINT MANUAL REF: 32-11-40 QUALIFIED I/W DATA: 161T1100-339, -345, -321, -281, -225, -279 MAY REPLACE BUT NOT BE REPLACED BY 161T1100-169, -151, -161, -107, -95 INCLUDE BE-CU PARTS WITH CUSTOMER APPROVAL 161T1100-339, -345, -321, -281, -225 ARE I/W 161T1100-343, -323, -277 INCLUDE BE-CU PARTS WITH CUSTOMER APPROVAL 161T1100-397, -361 INCLUDE BE-CU PARTS MAY REPLACE BUT NOT BE REPLACED BY 161T1100-339, -345, -321, -281, -225, -279, -257, -167, -145, -127, -89, -115, -71, -87, -63, -67, -47, -259, -119, -77, -55, -41, -19 WITH CUSTOMER APPROVAL	155162	RF

ILLUSTRATION ITEMS NOT ON PARTS LIST ARE NOT APPLICABLE

- ITEM NOT ILLUSTRATED

BOEING PROPRIETARY - Copyright © - Unpublished Work - See title page for details.

FIG ITEM	PART NUMBER	1 2 3 4 5 6 7 NOMENCLATURE	EFFECT FROM TO	UNITS PER ASSY
3T				
- 3	161T1100-377	STRUT ASSY-SHOCK REWORK MLG (PLACARDS AND MARKINGS ONLY) POSITION DATA: LH COMPONENT MAINT MANUAL REF: 32-11-40 QUALIFIED I/W DATA: 161T1100-395, -357, -377 MAY REPLACE BUT NOT BE REPLACED BY 161T1100-343, -323, -277, -169, -151, -161, -107, -95 INCLUDE BE-CU PARTS WITH CUSTOMER APPROVAL 161T1100-395, -357, -377, -339, -345, -321, -281, -225, -279 -257, -167, -145, -127, -89, -115, -71, -87, -63, -67, -47, -259 T/W 161T1306-2 MAY REPLACE BUT NOT BE REPLACED BY 161T1100-37, -17 T/W 161T1306-1 FOR NHA/OTHER SYS DET SEE: 32-11-02-04T	155162	RF

ILLUSTRATION ITEMS NOT ON PARTS LIST ARE NOT APPLICABLE

– ITEM NOT ILLUSTRATED

BOEING PROPRIETARY - Copyright © - Unpublished Work - See title page for details.

FIG ITEM	PART NUMBER	1 2 3 4 5 6 7 NOMENCLATURE	EFFECT FROM TO	UNITS PER ASSY
3T - 3	161T1100-377	STRUT ASSY-SHOCK REWORK MLG (PLACARDS AND MARKINGS ONLY) COMPONENT MAINT MANUAL REF: 32-11-40 QUALIFIED I/W DATA: 161T1100-395, -357, -377 MAY REPLACE BUT NOT BE REPLACED BY 161T1100-343, -323, -277, -169, -151, -161, -107, -95 INCLUDE BE-CU PARTS WITH CUSTOMER APPROVAL 161T1100-395, -357, -377, -339, -345, -321, -281, -225, -279 -257, -167, -145, -127, -89, -115, -71, -87, -63, -67, -47, -259 T/W 161T1306-2 MAY REPLACE BUT NOT BE REPLACED BY 161T1100-37, -17 T/W 161T1306-1 161T1100-397, -361 INCLUDES BE-CU PARTS IS I/W 161T1100-395, -357, -277 WITH CUSTOMER APPROVAL	155162	RF

ILLUSTRATION ITEMS NOT ON PARTS LIST ARE NOT APPLICABLE

– ITEM NOT ILLUSTRATED

BOEING PROPRIETARY - Copyright © - Unpublished Work - See title page for details.

FIG ITEM	PART NUMBER	1 2 3 4 5 6 7 NOMENCLATURE	EFFECT FROM TO	UNITS PER ASSY
3T				
- 3	161T1100-395	STRUT ASSY-SHOCK MLG (PLACARDS AND MARKINGS ONLY) POSITION DATA: LH COMPONENT MAINT MANUAL REF: 32-11-40 QUALIFIED I/W DATA: 161T1100-395, -357, -377, -339, -345, -321, -281, -225, -279 -257, -167, -145, -127, -89, -115, -71, -87, -63, -67, -47, -259 T/W 161T1306-2 MAY REPLACE BUT NOT BE REPLACED BY 161T1100-37, -17 T/W 161T1306-1 161T1100-395, -357, -377 MAY REPLACE BUT NOT BE REPLACED BY 161T1100-343, -323, -277, -169, -151, -161, -107, -95 INCLUDE BE-CU PARTS WITH CUSTOMER APPROVAL FOR NHA/OTHER SYS DET SEE: 32-11-02-04T	155162	RF
- 3	161T1100-395	STRUT ASSY-SHOCK MLG (PLACARDS AND MARKINGS ONLY) COMPONENT MAINT MANUAL REF: 32-11-40 QUALIFIED I/W DATA: 161T1100-395, -357, -377 MAY REPLACE BUT NOT BE REPLACED BY 161T1100-343, -323, -277, -169, -151, -161, -107, -95 INCLUDE BE-CU PARTS WITH CUSTOMER APPROVAL	155162	RF

ILLUSTRATION ITEMS NOT ON PARTS LIST ARE NOT APPLICABLE

- ITEM NOT ILLUSTRATED

BOEING PROPRIETARY - Copyright © - Unpublished Work - See title page for details.

FIG ITEM	PART NUMBER	1 2 3 4 5 6 7 NOMENCLATURE	EFFECT FROM TO	UNITS PER ASSY
3T				
- 3	161T1100-279	STRUT ASSY-SHOCK MLG (PLACARDS AND MARKINGS ONLY) POSITION DATA: LH MISCELLANEOUS DATA: FOR SPARES PROCURE LOWER COMPONENTS COMPONENT MAINT MANUAL REF: 32-11-40 QUALIFIED I/W DATA: 161T1100-395, -357, -377, -339, -345, -321, -281, -225, -279 -257, -167, -145, -127, -89, -115, -71, -87, -63, -67, -47, -259 T/W 161T1306-2 MAY REPLACE BUT NOT BE REPLACED BY 161T1100-37, -17 T/W 161T1306-1 161T1100-339, -345, -321, -281, -225, -279 MAY REPLACE BUT NOT BE REPLACED BY 161T1100-169, -151, -161, -107, -95 INCLUDE BE-CU PARTS WITH CUSTOMER APPROVAL FOR NHA/OTHER SYS DET SEE: 32-11-02-04T	155162	RF

ILLUSTRATION ITEMS NOT ON PARTS LIST ARE NOT APPLICABLE

- ITEM NOT ILLUSTRATED

BOEING PROPRIETARY - Copyright © - Unpublished Work - See title page for details.

FIG ITEM	PART NUMBER	1 2 3 4 5 6 7 NOMENCLATURE	EFFECT FROM TO	UNITS PER ASSY
3T - 3	161T1100-279	STRUT ASSY-SHOCK MLG (PLACARDS AND MARKINGS ONLY) COMPONENT MAINT MANUAL REF: 32-11-40 QUALIFIED I/W DATA: 161T1100-339, -345, -321, -281, -225, -279 MAY REPLACE BUT NOT BE REPLACED BY 161T1100-169, -151, -161, -107, -95 INCLUDE BE-CU PARTS WITH CUSTOMER APPROVAL 161T1100-343, -323, -277 INCLUDE BE-CU PARTS MAY REPLACE BUT NOT BE REPLACED BY 161T1100-279, -257, -167, -145, -127, -89, -115, -71, -87, -63, -67, -47, -259, -119, -77, -55, -41, -19 WITH CUSTOMER APPROVAL 161T1100-397, -361 INCLUDE BE-CU PARTS MAY REPLACE BUT NOT BE REPLACED BY 161T1100-339, -345, -321, -281, -225, -279, -257, -167, -145, -127, -89, -115, -71, -87, -63, -67, -47, -259, -119, -77, -55, -41, -19 WITH CUSTOMER APPROVAL	155162	RF

ILLUSTRATION ITEMS NOT ON PARTS LIST ARE NOT APPLICABLE

– ITEM NOT ILLUSTRATED

BOEING PROPRIETARY - Copyright © - Unpublished Work - See title page for details.

FIG ITEM	PART NUMBER	1 2 3 4 5 6 7 NOMENCLATURE	EFFECT FROM TO	UNITS PER ASSY
3T				
- 4	161T1100-361	STRUT ASSY-SHOCK MLG (PLACARDS AND MARKINGS ONLY) POSITION DATA: LH COMPONENT MAINT MANUAL REF: 32-11-40 QUALIFIED I/W DATA: 161T1100-397, -361 INCLUDE BE-CU PARTS MAY REPLACE BUT NOT BE REPLACED BY 161T1100-339, -345, -321, -281, -225, -279, -257, -167, -145, -127, -89, -115, -71, -87, -63, -67, -47, -259, -119, -77, -55, -41, -19 WITH CUSTOMER APPROVAL 161T1100-361 INCLUDES BE-CU PARTS IS I/W 161T1100-395,-357,-377 WITH CUSTOMER APPROVAL APPROVAL FOR NHA/OTHER SYS DET SEE: 32-11-02-04T	155162	RF
- 4	161T1100-361	STRUT ASSY-SHOCK MLG (PLACARDS AND MARKINGS ONLY) COMPONENT MAINT MANUAL REF: 32-11-40 QUALIFIED I/W DATA: 161T1100-397, -361 INCLUDE BE-CU PARTS MAY REPLACE BUT NOT BE REPLACED BY 161T1100-339, -345, -321, -281, -225, -279, -257, -167, -145, -127, -89, -115, -71, -87, -63, -67, -47, -259, -119, -77, -55, -41, -19 WITH CUSTOMER APPROVAL	155162	RF

ILLUSTRATION ITEMS NOT ON PARTS LIST ARE NOT APPLICABLE

- ITEM NOT ILLUSTRATED

BOEING PROPRIETARY - Copyright © - Unpublished Work - See title page for details.

FIG ITEM	PART NUMBER	1 2 3 4 5 6 7 NOMENCLATURE	EFFECT FROM TO	UNITS PER ASSY
3T				
- 4	161T1100-361	STRUT ASSY-SHOCK MLG (PLACARDS AND MARKINGS ONLY) COMPONENT MAINT MANUAL REF: 32-11-40 QUALIFIED I/W DATA: 161T1100-397, -361 INCLUDE BE-CU PARTS MAY REPLACE BUT NOT BE REPLACED BY 161T1100-339, -345, -321, -281, -225, -279, -257, -167, -145, -127, -89, -115, -71, -87, -63, -67, -47, -259, -119, -77, -55, -41, -19 WITH CUSTOMER APPROVAL -161, -107, -95 INCLUDE BE-CU PARTS T/W 161T1306 -2 MAY REPLACE BUT NOT BE REPLACED BY 161T1100 -37, -17 T/W 161T1306-1 WITH CUSTOMER APPROVAL 161T1306-1 WITH CUSTOMER APPROVAL	155162	RF
- 4	161T1100-481	STRUT ASSY-SHOCK MLG (PLACARDS AND MARKINGS ONLY) POSITION DATA: LH MISCELLANEOUS DATA: FOR SPARES PROCURE LOWER COMPONENTS COMPONENT MAINT MANUAL REF: 32-11-40 FOR NHA/OTHER SYS DET SEE: 32-11-02-04T	155162	RF
- 4	161T1100-479	STRUT ASSY-SHOCK MLG (PLACARDS AND MARKINGS ONLY) POSITION DATA: LH MISCELLANEOUS DATA: FOR SPARES PROCURE LOWER COMPONENTS COMPONENT MAINT MANUAL REF: 32-11-40 FOR NHA/OTHER SYS DET SEE: 32-11-02-04T	155162	RF

ILLUSTRATION ITEMS NOT ON PARTS LIST ARE NOT APPLICABLE

- ITEM NOT ILLUSTRATED

BOEING PROPRIETARY - Copyright © - Unpublished Work - See title page for details.

FIG ITEM	PART NUMBER	1 2 3 4 5 6 7 NOMENCLATURE	EFFECT FROM TO	UNITS PER ASSY
3T				
- 4	161T1100-465	STRUT ASSY-SHOCK MLG (PLACARDS AND MARKINGS ONLY) POSITION DATA: LH MISCELLANEOUS DATA: FOR SPARES PROCURE LOWER COMPONENTS COMPONENT MAINT MANUAL REF: 32-11-40 FOR NHA/OTHER SYS DET SEE: 32-11-02-04T	155162	RF
- 4	161T1100-447	STRUT ASSY-SHOCK MLG (PLACARDS AND MARKINGS ONLY) POSITION DATA: LH MISCELLANEOUS DATA: FOR SPARES PROCURE LOWER COMPONENTS COMPONENT MAINT MANUAL REF: 32-11-40 FOR NHA/OTHER SYS DET SEE: 32-11-02-04T	155162	RF
- 4	161T1100-445	STRUT ASSY-SHOCK MLG (PLACARDS AND MARKINGS ONLY) POSITION DATA: LH MISCELLANEOUS DATA: FOR SPARES PROCURE LOWER COMPONENTS COMPONENT MAINT MANUAL REF: 32-11-40 FOR NHA/OTHER SYS DET SEE: 32-11-02-04T	155162	RF
- 4	161T1100-461	STRUT ASSY-SHOCK MLG (PLACARDS AND MARKINGS ONLY) POSITION DATA: LH MISCELLANEOUS DATA: FOR SPARES PROCURE LOWER COMPONENTS COMPONENT MAINT MANUAL REF: 32-11-40 FOR NHA/OTHER SYS DET SEE: 32-11-02-04T	155162	RF

ILLUSTRATION ITEMS NOT ON PARTS LIST ARE NOT APPLICABLE

- ITEM NOT ILLUSTRATED

BOEING PROPRIETARY - Copyright © - Unpublished Work - See title page for details.

FIG ITEM	PART NUMBER	1 2 3 4 5 6 7 NOMENCLATURE	EFFECT FROM TO	UNITS PER ASSY
3T				
- 4	161T1100-403	STRUT ASSY-SHOCK MLG (PLACARDS AND MARKINGS ONLY) POSITION DATA: LH MISCELLANEOUS DATA: FOR SPARES PROCURE LOWER COMPONENTS COMPONENT MAINT MANUAL REF: 32-11-40 FOR NHA/OTHER SYS DET SEE: 32-11-02-04T	155162	RF
- 8	015T1504-27	STRUT ASSY-SHOCK MLG (PLACARDS AND MARKINGS ONLY) POSITION DATA: LH COMPONENT MAINT MANUAL REF: 32-11-40 ALTERED FROM PART NUMBER: 161T1100-89 POST ALERT SB: 32A0148 FOR NHA/OTHER SYS DET SEE: 32-11-02-04T	155162	RF
- 8	015T1504-39	STRUT ASSY-MLG SHOCK (PLACARDS AND MARKINGS ONLY) POSITION DATA: LH COMPONENT MAINT MANUAL REF: 32-11-40 POST ALERT SB: 32A0148 FOR NHA/OTHER SYS DET SEE: 32-11-02-04T	155162	RF
- 8	015T1504-47	STRUT ASSY-MLG SHOCK (PLACARDS AND MARKINGS ONLY) POSITION DATA: LH COMPONENT MAINT MANUAL REF: 32-11-40 POST ALERT SB: 32A0148 FOR NHA/OTHER SYS DET SEE: 32-11-02-04T	155162	RF

ILLUSTRATION ITEMS NOT ON PARTS LIST ARE NOT APPLICABLE

- ITEM NOT ILLUSTRATED

BOEING PROPRIETARY - Copyright © - Unpublished Work - See title page for details.

FIG ITEM	PART NUMBER	1 2 3 4 5 6 7 NOMENCLATURE	EFFECT FROM TO	UNITS PER ASSY
3T				
- 8	015T1504-37	STRUT ASSY-MLG SHOCK (PLACARDS AND MARKINGS ONLY) POSITION DATA: LH COMPONENT MAINT MANUAL REF: 32-11-40 ALTERED FROM PART NUMBER: 161T1100-127 POST ALERT SB: 32A0148 FOR NHA/OTHER SYS DET SEE: 32-11-02-04T	155162	RF
- 8	015T1504-51	STRUT ASSY-MLG SHOCK (PLACARDS AND MARKINGS ONLY) POSITION DATA: LH COMPONENT MAINT MANUAL REF: 32-11-40 POST ALERT SB: 32A0148 FOR NHA/OTHER SYS DET SEE: 32-11-02-04T	155162	RF
- 8	015T1504-53	STRUT ASSY-MLG SHOCK (PLACARDS AND MARKINGS ONLY) POSITION DATA: LH COMPONENT MAINT MANUAL REF: 32-11-40 POST ALERT SB: 32A0148 FOR NHA/OTHER SYS DET SEE: 32-11-02-04T	155162	RF
- 8	015T1504-61	STRUT ASSY-MLG SHOCK (PLACARDS AND MARKINGS ONLY) POSITION DATA: LH COMPONENT MAINT MANUAL REF: 32-11-40 POST ALERT SB: 32A0148 FOR NHA/OTHER SYS DET SEE: 32-11-02-04T	155162	RF

ILLUSTRATION ITEMS NOT ON PARTS LIST ARE NOT APPLICABLE

- ITEM NOT ILLUSTRATED

BOEING PROPRIETARY - Copyright © - Unpublished Work - See title page for details.

FIG ITEM	PART NUMBER	1 2 3 4 5 6 7 NOMENCLATURE	EFFECT FROM TO	UNITS PER ASSY
3T				
- 8	015T1504-63	STRUT ASSY-MLG SHOCK (PLACARDS AND MARKINGS ONLY) POSITION DATA: LH COMPONENT MAINT MANUAL REF: 32-11-40 POST ALERT SB: 32A0148 FOR NHA/OTHER SYS DET SEE: 32-11-02-04T	155162	RF
- 8	015T1504-69	STRUT ASSY-MLG SHOCK (PLACARDS AND MARKINGS ONLY) POSITION DATA: LH COMPONENT MAINT MANUAL REF: 32-11-40 POST ALERT SB: 32A0148 FOR NHA/OTHER SYS DET SEE: 32-11-02-04T	155162	RF
- 9	015T1504-59	STRUT ASSY-MLG SHOCK (PLACARDS AND MARKINGS ONLY) POSITION DATA: LH COMPONENT MAINT MANUAL REF: 32-11-40 POST ALERT SB: 32A0148 FOR NHA/OTHER SYS DET SEE: 32-11-02-04T	155162	RF

ILLUSTRATION ITEMS NOT ON PARTS LIST ARE NOT APPLICABLE

- ITEM NOT ILLUSTRATED

BOEING PROPRIETARY - Copyright © - Unpublished Work - See title page for details.

FIG ITEM	PART NUMBER	1 2 3 4 5 6 7 NOMENCLATURE	EFFECT FROM TO	UNITS PER ASSY
3T				
- 15	161T1100-90	STRUT ASSY-SHOCK MLG (PLACARDS AND MARKINGS ONLY) POSITION DATA: RH COMPONENT MAINT MANUAL REF: 32-11-40 QUALIFIED I/W DATA: 161T1100-396, -358, -378, -340, -346, -322, -282, -226, -280, -258, -168, -146, -128, -90, -72, -156, -88, -64, -68, -48, -260 T/W 161T1306-2 MAY REPLACE BUT NOT BE REPLACED BY 161T1100-38, -18 T/W 161T1306-1 161T1100-258, -168, -146, -128, -90 MAY REPLACE BUT NOT BE REPLACED BY 161T1100-162, -108, -96 INCLUDE BE-CU PARTS WITH CUSTOMER APPROVAL FOR NHA/OTHER SYS DET SEE: 32-11-02-04T	155162	RF

ILLUSTRATION ITEMS NOT ON PARTS LIST ARE NOT APPLICABLE

- ITEM NOT ILLUSTRATED

BOEING PROPRIETARY - Copyright © - Unpublished Work - See title page for details.

FIG ITEM	PART NUMBER	1 2 3 4 5 6 7 NOMENCLATURE	EFFECT FROM TO	UNITS PER ASSY
3T				
- 15	161T1100-90	STRUT ASSY-SHOCK MLG (PLACARDS AND MARKINGS ONLY) COMPONENT MAINT MANUAL REF: 32-11-40 QUALIFIED I/W DATA: 161T1100-170, -152 INCLUDE BE-CU PARTS IS I/W 161T1100-258, -168, -146, -128, -90 WITH CUSTOMER APPROVAL 161T1100-344, -324, -278 INCLUDE BE-CU PARTS MAY REPLACE BUT NOT BE REPLACED BY 161T1100-280, -258, -168, -146, -128, -90, -72, -156, -88, -64, -68, -48, -260, -120, -78, -56, -42, -20 WITH CUSTOMER APPROVAL 161T1100-398, -362 INCLUDE BE-CU PARTS MAY REPLACE BUT NOT BE REPLACED BY 161T1100-340, -346, -322, -282, -226, -280, -258, -168, -146, -128, -90, -72, -156, -88, -64, -68, -48, -260, -120, -78, -56, -42, -20 WITH CUSTOMER APPROVAL	155162	RF

ILLUSTRATION ITEMS NOT ON PARTS LIST ARE NOT APPLICABLE

- ITEM NOT ILLUSTRATED

BOEING PROPRIETARY - Copyright © - Unpublished Work - See title page for details.

FIG ITEM	PART NUMBER	1 2 3 4 5 6 7 NOMENCLATURE	EFFECT FROM TO	UNITS PER ASSY
3T				
- 15	161T1100-128	STRUT ASSY-SHOCK MLG (PLACARDS AND MARKINGS ONLY) POSITION DATA: RH MISCELLANEOUS DATA: FOR SPARES PROCURE LOWER COMPONENTS COMPONENT MAINT MANUAL REF: 32-11-40 QUALIFIED I/W DATA: 161T1100-396, -358, -378, -340, -346, -322, -282, -226, -280, -258, -168, -146, -128, -90, -72, -156, -88, -64, -68, -48, -260 T/W 161T1306-2 MAY REPLACE BUT NOT BE REPLACED BY 161T1100-38, -18 T/W 161T1306-1 161T1100-258, -168, -146, -128, -90 MAY REPLACE BUT NOT BE REPLACED BY 161T1100-162, -108, -96 INCLUDE BE-CU PARTS WITH CUSTOMER APPROVAL FOR NHA/OTHER SYS DET SEE: 32-11-02-04T	155162	RF

ILLUSTRATION ITEMS NOT ON PARTS LIST ARE NOT APPLICABLE

- ITEM NOT ILLUSTRATED

BOEING PROPRIETARY - Copyright © - Unpublished Work - See title page for details.

FIG ITEM	PART NUMBER	1 2 3 4 5 6 7 NOMENCLATURE	EFFECT FROM TO	UNITS PER ASSY
3T				
- 15	161T1100-128	STRUT ASSY-SHOCK MLG (PLACARDS AND MARKINGS ONLY) COMPONENT MAINT MANUAL REF: 32-11-40 QUALIFIED I/W DATA: 161T1100-170, -152 INCLUDE BE-CU PARTS IS I/W 161T1100-258, -168, -146, -128, -90 WITH CUSTOMER APPROVAL 161T1100-344, -324, -278 INCLUDE BE-CU PARTS MAY REPLACE BUT NOT BE REPLACED BY 161T1100-280, -258, -168, -146, -128, -90, -72, -156, -88, -64, -68, -48, -260, -120, -78, -56, -42, -20 WITH CUSTOMER APPROVAL 161T1100-398, -362 INCLUDE BE-CU PARTS MAY REPLACE BUT NOT BE REPLACED BY 161T1100-340, -346, -322, -282, -226, -280, -258, -168, -146, -128, -90, -72, -156, -88, -64, -68, -48, -260, -120, -78, -56, -42, -20 WITH CUSTOMER APPROVAL	155162	RF

ILLUSTRATION ITEMS NOT ON PARTS LIST ARE NOT APPLICABLE

- ITEM NOT ILLUSTRATED

BOEING PROPRIETARY - Copyright © - Unpublished Work - See title page for details.

FIG ITEM	PART NUMBER	1 2 3 4 5 6 7 NOMENCLATURE	EFFECT FROM TO	UNITS PER ASSY
3T				
- 15	161T1100-146	STRUT ASSY-SHOCK MLG (PLACARDS AND MARKINGS ONLY) POSITION DATA: RH MISCELLANEOUS DATA: FOR SPARES PROCURE LOWER COMPONENTS COMPONENT MAINT MANUAL REF: 32-11-40 QUALIFIED I/W DATA: 161T1100-396, -358, -378, -340, -346, -322, -282, -226, -280, -258, -168, -146, -128, -90, -72, -156, -88, -64, -68, -48, -260 T/W 161T1306-2 MAY REPLACE BUT NOT BE REPLACED BY 161T1100-38, -18 T/W 161T1306-1 161T1100-258, -168, -146, -128, -90 MAY REPLACE BUT NOT BE REPLACED BY 161T1100-162, -108, -96 INCLUDE BE-CU PARTS WITH CUSTOMER APPROVAL FOR NHA/OTHER SYS DET SEE: 32-11-02-04T	155162	RF

ILLUSTRATION ITEMS NOT ON PARTS LIST ARE NOT APPLICABLE

- ITEM NOT ILLUSTRATED

BOEING PROPRIETARY - Copyright © - Unpublished Work - See title page for details.

FIG ITEM	PART NUMBER	1 2 3 4 5 6 7 NOMENCLATURE	EFFECT FROM TO	UNITS PER ASSY
3T - 15	161T1100-146	STRUT ASSY-SHOCK MLG (PLACARDS AND MARKINGS ONLY) COMPONENT MAINT MANUAL REF: 32-11-40 QUALIFIED I/W DATA: 161T1100-170, -152 INCLUDE BE-CU PARTS IS I/W 161T1100-258, -168, -146, -128, -90 WITH CUSTOMER APPROVAL 161T1100-258, -168, -146, -128, -90 MAY REPLACE BUT NOT BE REPLACED BY 161T1100-162, -108, -96 INCLUDE BE-CU PARTS WITH CUSTOMER APPROVAL 161T1100-344, -324, -278 INCLUDE BE-CU PARTS MAY REPLACE BUT NOT BE REPLACED BY 161T1100-280, -258, -168, -146, -128, -90, -72, -156, -88, -64, -68, -48, -260, -120, -78, -56, -42, -20 WITH CUSTOMER APPROVAL 161T1100-398, -362 INCLUDE BE-CU PARTS MAY REPLACE BUT NOT BE REPLACED BY 161T1100-340, -346, -322, -282, -226, -280, -258, -168, -146, -128, -90, -72, -156, -88, -64, -68, -48, -260, -120, -78, -56, -42, -20 WITH CUSTOMER APPROVAL	155162	RF

ILLUSTRATION ITEMS NOT ON PARTS LIST ARE NOT APPLICABLE

– ITEM NOT ILLUSTRATED

BOEING PROPRIETARY - Copyright © - Unpublished Work - See title page for details.

FIG ITEM	PART NUMBER	1 2 3 4 5 6 7 NOMENCLATURE	EFFECT FROM TO	UNITS PER ASSY
3T - 15	161T1100-168	STRUT ASSY-SHOCK MLG (PLACARDS AND MARKINGS ONLY) POSITION DATA: RH COMPONENT MAINT MANUAL REF: 32-11-40 QUALIFIED I/W DATA: 161T1100-396, -358, -378, -340, -346, -322, -282, -226, -280, -258, -168, -146, -128, -90, -72, -156, -88, -64, -68, -48, -260 T/W 161T1306-2 MAY REPLACE BUT NOT BE REPLACED BY 161T1100-38, -18 T/W 161T1306-1 161T1100-170, -152 INCLUDE BE-CU PARTS IS I/W 161T1100-258, -168, -146, -128, -90 WITH CUSTOMER APPROVAL 161T1100-258, -168, -146, -128, -90 MAY REPLACE BUT NOT BE REPLACED BY 161T1100-162, -108, -96 INCLUDE BE-CU PARTS WITH CUSTOMER APPROVAL 161T1100-398, -362 INCLUDE BE-CU PARTS MAY REPLACE BUT NOT BE REPLACED BY 161T1100-340, -346, -322, -282, -226, -280, -258, -168, -146, -128, -90, -72, -156, -88 -64, -68, -48, -260, -120, -78, -56, -42, -20 WITH CUSTOMER APPROVAL FOR NHA/OTHER SYS DET SEE: 32-11-02-04T	155162	RF

ILLUSTRATION ITEMS NOT ON PARTS LIST ARE NOT APPLICABLE

– ITEM NOT ILLUSTRATED

BOEING PROPRIETARY - Copyright © - Unpublished Work - See title page for details.

FIG ITEM	PART NUMBER	1 2 3 4 5 6 7 NOMENCLATURE	EFFECT FROM TO	UNITS PER ASSY
3T				
- 15	161T1100-168	STRUT ASSY-SHOCK MLG (PLACARDS AND MARKINGS ONLY) COMPONENT MAINT MANUAL REF: 32-11-40 QUALIFIED I/W DATA: 161T1100-344, -324, -278 INCLUDE BE-CU PARTS MAY REPLACE BUT NOT BE REPLACED BY 161T1100-280, -258, -168, -146, -128, -90, -72, -156, -88, -64, -68, -48, -260, -120, -78, -56, -42, -20 WITH CUSTOMER APPROVAL	155162	RF

ILLUSTRATION ITEMS NOT ON PARTS LIST ARE NOT APPLICABLE

- ITEM NOT ILLUSTRATED

BOEING PROPRIETARY - Copyright © - Unpublished Work - See title page for details.

FIG ITEM	PART NUMBER	1 2 3 4 5 6 7 NOMENCLATURE	EFFECT FROM TO	UNITS PER ASSY
3T - 15	161T1100-358	STRUT ASSY-SHOCK MLG (PLACARDS AND MARKINGS ONLY) POSITION DATA: RH COMPONENT MAINT MANUAL REF: 32-11-40 QUALIFIED I/W DATA: 161T1100-120, -78, -56, -42, -20 T/W 161T1306-2 IS I/W 161T1100-38, -18 T/W 161T1306-1 161T1100-398, -362 INCLUDE BE-CU PARTS MAY REPLACE BUT NOT BE REPLACED BY 161T1100-340, -346, -282 -226, -280, -258, -168, -146, -128, -90, -72, -156, -88, -64, -68, -48, -260, -120, -78, -56, -42, -20 WITH CUSTOMER APPROVAL 161T1100-398, -362 INCLUDES BE-CU PARTS IS I/W 161T1100-396, -358, -378 WITH CUSTOMER APPROVAL 161T1100-396, -358, -378 MAY REPLACE BUT NOT BE REPLACED BY 161T1100-344, -324, -278, -170, -152, -162, -108, -96 INCLUDE BE-CU PARTS WITH CUSTOMER APPROVAL POST ALERT SB: 32A0148 FOR NHA/OTHER SYS DET SEE: 32-11-02-04T	155162	RF

ILLUSTRATION ITEMS NOT ON PARTS LIST ARE NOT APPLICABLE

– ITEM NOT ILLUSTRATED

BOEING PROPRIETARY - Copyright © - Unpublished Work - See title page for details.

FIG ITEM	PART NUMBER	1 2 3 4 5 6 7 NOMENCLATURE	EFFECT FROM TO	UNITS PER ASSY
3T				
- 15	161T1100-358	STRUT ASSY-SHOCK MLG (PLACARDS AND MARKINGS ONLY) COMPONENT MAINT MANUAL REF: 32-11-40 QUALIFIED I/W DATA: 161T1100-396, -358, -378 MAY REPLACE BUT NOT BE REPLACED BY 161T1100-344, -324, -278, -170, -152, -162, -108, -96 INCLUDE BE-CU PARTS WITH CUSTOMER APPROVAL	155162	RF
- 15	161T1100-258	STRUT ASSY-SHOCK MLG (PLACARDS AND MARKINGS ONLY) POSITION DATA: RH MISCELLANEOUS DATA: FOR SPARES PROCURE LOWER COMPONENTS COMPONENT MAINT MANUAL REF: 32-11-40 QUALIFIED I/W DATA: 161T1100-396, -358, -378, -340, -346, -322, -282, -226, -280, -258, -168, -146, -128, -90, -72, -156, -88, -64, -68, -48, -260 T/W 161T1306-2 MAY REPLACE BUT NOT BE REPLACED BY 161T1100-38, -18 T/W 161T1306-1 161T1100-258, -168, -146, -128, -90 MAY REPLACE BUT NOT BE REPLACED BY 161T1100-162, -108, -96 INCLUDE BE-CU PARTS WITH CUSTOMER APPROVAL 161T1100-170, -152 INCLUDE BE-CU PARTS IS I/W 161T1100-258, -168, -146, -128, -90 WITH CUSTOMER APPROVAL FOR NHA/OTHER SYS DET SEE: 32-11-02-04T	155162	RF

ILLUSTRATION ITEMS NOT ON PARTS LIST ARE NOT APPLICABLE

- ITEM NOT ILLUSTRATED

BOEING PROPRIETARY - Copyright © - Unpublished Work - See title page for details.

FIG ITEM	PART NUMBER	1 2 3 4 5 6 7 NOMENCLATURE	EFFECT FROM TO	UNITS PER ASSY
3T				
- 15	161T1100-258	STRUT ASSY-SHOCK MLG (PLACARDS AND MARKINGS ONLY) COMPONENT MAINT MANUAL REF: 32-11-40 QUALIFIED I/W DATA: 161T1100-258, -168, -146, -128, -90 MAY REPLACE BUT NOT BE REPLACED BY 161T1100-162, -108, -96 INCLUDE BE-CU PARTS WITH CUSTOMER APPROVAL 161T1100-170, -152 INCLUDE BE-CU PARTS IS I/W 161T1100-258, -168, -146, -128, -90 WITH CUSTOMER APPROVAL 161T1100-344, -324, -278 INCLUDE BE-CU PARTS MAY REPLACE BUT NOT BE REPLACED BY 161T1100-280, -258, -168, -146, -128, -90, -72, -156, -88, -64, -68, -48, -260, -120, -78, -56, -42, -20 WITH CUSTOMER APPROVAL 161T1100-398, -362 INCLUDE BE-CU PARTS MAY REPLACE BUT NOT BE REPLACED BY 161T1100-340, -346, -322, -282, -226, -280, -258, -168, -146, -128, -90, -72, -156, -88, -64, -68, -48, -260, -120, -78, -56, -42, -20 WITH CUSTOMER APPROVAL	155162	RF

ILLUSTRATION ITEMS NOT ON PARTS LIST ARE NOT APPLICABLE

- ITEM NOT ILLUSTRATED

BOEING PROPRIETARY - Copyright © - Unpublished Work - See title page for details.

FIG ITEM	PART NUMBER	1 2 3 4 5 6 7 NOMENCLATURE	EFFECT FROM TO	UNITS PER ASSY
3T - 15	161T1100-282	STRUT ASSY-SHOCK MLG (PLACARDS AND MARKINGS ONLY) POSITION DATA: RH MISCELLANEOUS DATA: FOR SPARES PROCURE LOWER COMPONENTS COMPONENT MAINT MANUAL REF: 32-11-40 QUALIFIED I/W DATA: 161T1100-396, -358, -378, -340, -346, -322, -282, -226, -280, -258, -168, -146, -128, -90, -72, -156, -88, -64, -68, -48, -260 T/W 161T1306-2 MAY REPLACE BUT NOT BE REPLACED BY 161T1100-38, -18 T/W 161T1306-1 161T1100-340, -346, -322, -282, -226, -280 MAY REPLACE BUT NOT BE REPLACED BY 161T1100-170, -152, -162, -108, -96 INCLUDE BE-CU PARTS WITH CUSTOMER APPROVAL FOR NHA/OTHER SYS DET SEE: 32-11-02-04T	155162	RF

ILLUSTRATION ITEMS NOT ON PARTS LIST ARE NOT APPLICABLE

– ITEM NOT ILLUSTRATED

BOEING PROPRIETARY - Copyright © - Unpublished Work - See title page for details.

FIG ITEM	PART NUMBER	1 2 3 4 5 6 7 NOMENCLATURE	EFFECT FROM TO	UNITS PER ASSY
3T - 15	161T1100-282	STRUT ASSY-SHOCK MLG (PLACARDS AND MARKINGS ONLY) COMPONENT MAINT MANUAL REF: 32-11-40 QUALIFIED I/W DATA: 161T1100-340, -346, -322, -282, -226, -280 MAY REPLACE BUT NOT BE REPLACED BY 161T1100-170, -152, -162, -108, -96 INCLUDE BE-CU PARTS WITH CUSTOMER APPROVAL 161T1100-340, -346, -322, -282, -226 ARE I/W 161T1100-344, -324, -278 INCLUDE BE-CU PARTS WITH CUSTOMER APPROVAL 161T1100-398, -362 INCLUDE BE-CU PARTS MAY REPLACE BUT NOT BE REPLACED BY 161T1100-340, -346, -322, -282, -226, -280, -258, -168, -146, -128, -90, -72, -156, -88, -64, -68, -48, -260, -120, -78, -56, -42, -20 WITH CUSTOMER APPROVAL	155162	RF

ILLUSTRATION ITEMS NOT ON PARTS LIST ARE NOT APPLICABLE

– ITEM NOT ILLUSTRATED

BOEING PROPRIETARY - Copyright © - Unpublished Work - See title page for details.

FIG ITEM	PART NUMBER	1 2 3 4 5 6 7 NOMENCLATURE	EFFECT FROM TO	UNITS PER ASSY
3T - 16	161T1100-226	STRUT ASSY-MLG SHOCK (PLACARDS AND MARKINGS ONLY) POSITION DATA: RH MISCELLANEOUS DATA: FOR SPARES PROCURE LOWER COMPONENTS COMPONENT MAINT MANUAL REF: 32-11-40 QUALIFIED I/W DATA: 161T1100-396, -358, -378, -340, -346, -322, -282, -226, -280, -258, -168, -146, -128, -90, -72, -156, -88, -64, -68, -48, -260 T/W 161T1306-2 MAY REPLACE BUT NOT BE REPLACED BY 161T1100-38, -18 T/W 161T1306-1 161T1100-340, -346, -322, -282, -226, -280 MAY REPLACE BUT NOT BE REPLACED BY 161T1100-170, -152, -162, -108, -96 INCLUDE BE-CU PARTS WITH CUSTOMER APPROVAL FOR NHA/OTHER SYS DET SEE: 32-11-02-04T	155162	RF

ILLUSTRATION ITEMS NOT ON PARTS LIST ARE NOT APPLICABLE

– ITEM NOT ILLUSTRATED

BOEING PROPRIETARY - Copyright © - Unpublished Work - See title page for details.

FIG ITEM	PART NUMBER	1 2 3 4 5 6 7 NOMENCLATURE	EFFECT FROM TO	UNITS PER ASSY
3T - 16	161T1100-226	STRUT ASSY-SHOCK MLG (PLACARDS AND MARKINGS ONLY) COMPONENT MAINT MANUAL REF: 32-11-40 QUALIFIED I/W DATA: 161T1100-340, -346, -322, -282, -226, -280 MAY REPLACE BUT NOT BE REPLACED BY 161T1100-170, -152, -162, -108, -96 INCLUDE BE-CU PARTS WITH CUSTOMER APPROVAL 161T1100-340, -346, -322, -282, -226 ARE I/W 161T1100-344, -324, -278 INCLUDE BE-CU PARTS WITH CUSTOMER APPROVAL 161T1100-398, -362 INCLUDE BE-CU PARTS MAY REPLACE BUT NOT BE REPLACED BY 161T1100-340, -346, -322, -282, -226, -280, -258, -168, -146, -128, -90, -72, -156, -88, -64, -68, -48, -260, -120, -78, -56, -42, -20 WITH CUSTOMER APPROVAL	155162	RF

ILLUSTRATION ITEMS NOT ON PARTS LIST ARE NOT APPLICABLE

– ITEM NOT ILLUSTRATED

BOEING PROPRIETARY - Copyright © - Unpublished Work - See title page for details.

FIG ITEM	PART NUMBER	1 2 3 4 5 6 7 NOMENCLATURE	EFFECT FROM TO	UNITS PER ASSY
3T				
- 16	161T1100-322	STRUT ASSY-SHOCK MLG (PLACARDS AND MARKINGS ONLY) POSITION DATA: RH MISCELLANEOUS DATA: FOR SPARES PROCURE LOWER COMPONENTS COMPONENT MAINT MANUAL REF: 32-11-40 QUALIFIED I/W DATA: 161T1100-396, -358, -378, -340, -346, -322, -282, -226, -280, -258, -168, -146, -128, -90, -72, -156, -88, -64, -68, -48, -260 T/W 161T1306-2 MAY REPLACE BUT NOT BE REPLACED BY 161T1100-38, -18 T/W 161T1306-1 161T1100-340, -346, -322, -282, -226, -280 MAY REPLACE BUT NOT BE REPLACED BY 161T1100-170, -152, -162, -108, -96 INCLUDE BE-CU PARTS WITH CUSTOMER APPROVAL FOR NHA/OTHER SYS DET SEE: 32-11-02-04T	155162	RF

ILLUSTRATION ITEMS NOT ON PARTS LIST ARE NOT APPLICABLE

– ITEM NOT ILLUSTRATED

BOEING PROPRIETARY - Copyright © - Unpublished Work - See title page for details.

FIG ITEM	PART NUMBER	1 2 3 4 5 6 7 NOMENCLATURE	EFFECT FROM TO	UNITS PER ASSY
3T - 16	161T1100-322	STRUT ASSY-SHOCK MLG (PLACARDS AND MARKINGS ONLY) COMPONENT MAINT MANUAL REF: 32-11-40 QUALIFIED I/W DATA: 161T1100-340, -346, -322, -282, -226, -280 MAY REPLACE BUT NOT BE REPLACED BY 161T1100-170, -152, -162, -108, -96 INCLUDE BE-CU PARTS WITH CUSTOMER APPROVAL 161T1100-340, -346, -322, -282, -226 ARE I/W 161T1100-344, -324, -278 INCLUDE BE-CU PARTS WITH CUSTOMER APPROVAL 161T1100-398, -362 INCLUDE BE-CU PARTS MAY REPLACE BUT NOT BE REPLACED BY 161T1100-340, -346, -322, -282, -226, -280, -258, -168, -146, -128, -90, -72, -156, -88, -64, -68, -48, -260, -120, -78, -56, -42, -20 WITH CUSTOMER APPROVAL	155162	RF

ILLUSTRATION ITEMS NOT ON PARTS LIST ARE NOT APPLICABLE

– ITEM NOT ILLUSTRATED

BOEING PROPRIETARY - Copyright © - Unpublished Work - See title page for details.

FIG ITEM	PART NUMBER	1 2 3 4 5 6 7 NOMENCLATURE	EFFECT FROM TO	UNITS PER ASSY
3T - 16	161T1100-340	STRUT ASSY-SHOCK MLG (PLACARDS AND MARKINGS ONLY) POSITION DATA: RH MISCELLANEOUS DATA: FOR SPARES PROCURE LOWER COMPONENTS COMPONENT MAINT MANUAL REF: 32-11-40 QUALIFIED I/W DATA: 161T1100-396, -358, -378, -340, -346, -322, -282, -226, -280, -258, -168, -146, -128, -90, -72, -156, -88, -64, -68, -48, -260 T/W 161T1306-2 MAY REPLACE BUT NOT BE REPLACED BY 161T1100-38, -18 T/W 161T1306-1 161T1100-340, -346, -322, -282, -226, -280 MAY REPLACE BUT NOT BE REPLACED BY 161T1100-170, -152, -162, -108, -96 INCLUDE BE-CU PARTS WITH CUSTOMER APPROVAL FOR NHA/OTHER SYS DET SEE: 32-11-02-04T	155162	RF

ILLUSTRATION ITEMS NOT ON PARTS LIST ARE NOT APPLICABLE

– ITEM NOT ILLUSTRATED

BOEING PROPRIETARY - Copyright © - Unpublished Work - See title page for details.

FIG ITEM	PART NUMBER	1 2 3 4 5 6 7 NOMENCLATURE	EFFECT FROM TO	UNITS PER ASSY
3T				
- 17	161T1100-340	STRUT ASSY-SHOCK MLG (PLACARDS AND MARKINGS ONLY) COMPONENT MAINT MANUAL REF: 32-11-40 QUALIFIED I/W DATA: 161T1100-340, -346, -322, -282, -226, -280 MAY REPLACE BUT NOT BE REPLACED BY 161T1100-170, -152, -162, -108, -96 INCLUDE BE-CU PARTS WITH CUSTOMER APPROVAL 161T1100-340, -346, -322, -282, -226 ARE I/W 161T1100-344, -324, -278 INCLUDE BE-CU PARTS WITH CUSTOMER APPROVAL 161T1100-398, -362 INCLUDE BE-CU PARTS MAY REPLACE BUT NOT BE REPLACED BY 161T1100-340, -346, -322, -282, -226, -280, -258, -168, -146, -128, -90, -72, -156, -88, -64, -68, -48, -260, -120, -78, -56, -42, -20 WITH CUSTOMER APPROVAL	155162	RF

ILLUSTRATION ITEMS NOT ON PARTS LIST ARE NOT APPLICABLE

- ITEM NOT ILLUSTRATED

BOEING PROPRIETARY - Copyright © - Unpublished Work - See title page for details.

FIG ITEM	PART NUMBER	1 2 3 4 5 6 7 NOMENCLATURE	EFFECT FROM TO	UNITS PER ASSY
3T				
- 17	161T1100-346	STRUT ASSY-SHOCK MLG (PLACARDS AND MARKINGS ONLY) POSITION DATA: RH MISCELLANEOUS DATA: FOR SPARES PROCURE LOWER COMPONENTS COMPONENT MAINT MANUAL REF: 32-11-40 QUALIFIED I/W DATA: 161T1100-396, -358, -378, -340, -346, -322, -282, -226, -280, -258, -168, -146, -128, -90, -72, -156, -88, -64, -68, -48, -260 T/W 161T1306-2 MAY REPLACE BUT NOT BE REPLACED BY 161T1100-38, -18 T/W 161T1306-1 161T1100-340, -346, -322, -282, -226, -280 MAY REPLACE BUT NOT BE REPLACED BY 161T1100-170, -152, -162, -108, -96 INCLUDE BE-CU PARTS WITH CUSTOMER APPROVAL FOR NHA/OTHER SYS DET SEE: 32-11-02-04T	155162	RF

ILLUSTRATION ITEMS NOT ON PARTS LIST ARE NOT APPLICABLE

- ITEM NOT ILLUSTRATED

BOEING PROPRIETARY - Copyright © - Unpublished Work - See title page for details.

FIG ITEM	PART NUMBER	1 2 3 4 5 6 7 NOMENCLATURE	EFFECT FROM TO	UNITS PER ASSY
3T				
- 17	161T1100-346	STRUT ASSY-SHOCK MLG (PLACARDS AND MARKINGS ONLY) COMPONENT MAINT MANUAL REF: 32-11-40 QUALIFIED I/W DATA: 161T1100-340, -346, -322, -282, -226, -280 MAY REPLACE BUT NOT BE REPLACED BY 161T1100-170, -152, -162, -108, -96 INCLUDE BE-CU PARTS WITH CUSTOMER APPROVAL 161T1100-340, -346, -322, -282, -226 ARE I/W 161T1100-344, -324, -278 INCLUDE BE-CU PARTS WITH CUSTOMER APPROVAL 161T1100-398, -362 INCLUDE BE-CU PARTS MAY REPLACE BUT NOT BE REPLACED BY 161T1100-340, -346, -322, -282, -226, -280, -258, -168, -146, -128, -90, -72, -156, -88, -64, -68, -48, -260, -120, -78, -56, -42, -20 WITH CUSTOMER APPROVAL	155162	RF

ILLUSTRATION ITEMS NOT ON PARTS LIST ARE NOT APPLICABLE

- ITEM NOT ILLUSTRATED

BOEING PROPRIETARY - Copyright © - Unpublished Work - See title page for details.

FIG ITEM	PART NUMBER	1 2 3 4 5 6 7 NOMENCLATURE	EFFECT FROM TO	UNITS PER ASSY
3T				
- 17	161T1100-378	STRUT ASSY-SHOCK REWORK MLG (PLACARDS AND MARKINGS ONLY) POSITION DATA: RH COMPONENT MAINT MANUAL REF: 32-11-40 QUALIFIED I/W DATA: 161T1100-396, -358, -378, -340, -346, -322, -282, -226, -280, -258, -168, -146, -128, -90, -72, -156, -88, -64, -68, -48, -260 T/W 161T1306-2 MAY REPLACE BUT NOT BE REPLACED BY 161T1100-38, -18 T/W 161T1306-1 161T1100-396, -358, -378 MAY REPLACE BUT NOT BE REPLACED BY 161T1100-344, -324, -278, -170, -152, -162, -108, -96 INCLUDE BE-CU PARTS WITH CUSTOMER APPROVAL FOR NHA/OTHER SYS DET SEE: 32-11-02-04T	155162	RF
- 17	161T1100-378	STRUT ASSY-SHOCK REWORK MLG (PLACARDS AND MARKINGS ONLY) COMPONENT MAINT MANUAL REF: 32-11-40 QUALIFIED I/W DATA: 161T1100-396, -358, -378 MAY REPLACE BUT NOT BE REPLACED BY 161T1100-344, -324, -278, -170, -152, -162, -108, -96 INCLUDE BE-CU PARTS WITH CUSTOMER APPROVAL 161T1100-398, -362 INCLUDES BE-CU PARTS IS I/W 161T1100-396, -358, -378 WITH CUSTOMER APPROVAL	155162	RF

ILLUSTRATION ITEMS NOT ON PARTS LIST ARE NOT APPLICABLE

- ITEM NOT ILLUSTRATED

BOEING PROPRIETARY - Copyright © - Unpublished Work - See title page for details.

FIG ITEM	PART NUMBER	1 2 3 4 5 6 7 NOMENCLATURE	EFFECT FROM TO	UNITS PER ASSY
3T				
- 17	161T1100-396	STRUT ASSY-SHOCK MLG (PLACARDS AND MARKINGS ONLY) POSITION DATA: RH COMPONENT MAINT MANUAL REF: 32-11-40 QUALIFIED I/W DATA: 161T1100-396, -358, -378, -340, -346, -322, -282, -226, -280, -258, -168, -146, -128, -90, -72, -156, -88, -64, -68, -48, -260 T/W 161T1306-2 MAY REPLACE BUT NOT BE REPLACED BY 161T1100-38, -18 T/W 161T1306-1 161T1100-396, -358, -378 MAY REPLACE BUT NOT BE REPLACED BY 161T1100-344, -324, -278, -170, -152, -162, -108, -96 INCLUDE BE-CU PARTS WITH CUSTOMER APPROVAL FOR NHA/OTHER SYS DET SEE: 32-11-02-04T	155162	RF
- 17	161T1100-396	STRUT ASSY-SHOCK MLG (PLACARDS AND MARKINGS ONLY) COMPONENT MAINT MANUAL REF: 32-11-40 QUALIFIED I/W DATA: 161T1100-396, -358, -378 MAY REPLACE BUT NOT BE REPLACED BY 161T1100-344, -324, -278, -170, -152, -162, -108, -96 INCLUDE BE-CU PARTS WITH CUSTOMER APPROVAL 161T1100-398, -362 INCLUDES BE-CU PARTS IS I/W 161T1100-396, -358, -378 WITH CUSTOMER APPROVAL	155162	RF

ILLUSTRATION ITEMS NOT ON PARTS LIST ARE NOT APPLICABLE

- ITEM NOT ILLUSTRATED

BOEING PROPRIETARY - Copyright © - Unpublished Work - See title page for details.

FIG ITEM	PART NUMBER	1 2 3 4 5 6 7 NOMENCLATURE	EFFECT FROM TO	UNITS PER ASSY
3T				
- 17	161T1100-280	STRUT ASSY-SHOCK MLG (PLACARDS AND MARKINGS ONLY) POSITION DATA: RH MISCELLANEOUS DATA: FOR SPARES PROCURE LOWER COMPONENTS COMPONENT MAINT MANUAL REF: 32-11-40 QUALIFIED I/W DATA: 161T1100-396, -358, -378, -340, -346, -322, -282, -226, -280, -258, -168, -146, -128, -90, -72, -156, -88, -64, -68, -48, -260 T/W 161T1306-2 MAY REPLACE BUT NOT BE REPLACED BY 161T1100-38, -18 T/W 161T1306-1 161T1100-340, -346, -322, -282, -226, -280 MAY REPLACE BUT NOT BE REPLACED BY 161T1100-170, -152, -162, -108, -96 INCLUDE BE-CU PARTS WITH CUSTOMER APPROVAL FOR NHA/OTHER SYS DET SEE: 32-11-02-04T	155162	RF

ILLUSTRATION ITEMS NOT ON PARTS LIST ARE NOT APPLICABLE

- ITEM NOT ILLUSTRATED

BOEING PROPRIETARY - Copyright © - Unpublished Work - See title page for details.

FIG ITEM	PART NUMBER	1 2 3 4 5 6 7 NOMENCLATURE	EFFECT FROM TO	UNITS PER ASSY
3T				
- 17	161T1100-280	STRUT ASSY-SHOCK MLG (PLACARDS AND MARKINGS ONLY) COMPONENT MAINT MANUAL REF: 32-11-40 QUALIFIED I/W DATA: 161T1100-340, -346, -322, -282, -226, -280 MAY REPLACE BUT NOT BE REPLACED BY 161T1100-170, -152, -162, -108, -96 INCLUDE BE-CU PARTS WITH CUSTOMER APPROVAL 161T1100-344, -324, -278 INCLUDE BE-CU PARTS MAY REPLACE BUT NOT BE REPLACED BY 161T1100-280, -258, -168, -146, -128, -90, -72, -156, -88, -64, -68, -48, -260, -120, -120, -78, -56, -42, -20 WITH CUSTOMER APPROVAL 161T1100-398, -362 INCLUDE BE-CU PARTS MAY REPLACE BUT NOT BE REPLACED BY 161T1100-340, -346, -322, -282, -226, -280, -258, -168, -146, -128, -90, -72, -156, -88, -64, -68, -48, -260, -120, -78, -56, -42, -20 WITH CUSTOMER APPROVAL	155162	RF
- 18	015T1504-28	STRUT ASSY-SHOCK MLG (PLACARDS AND MARKINGS ONLY) POSITION DATA: RH COMPONENT MAINT MANUAL REF: 32-11-40 ALTERED FROM PART NUMBER: 161T1100-90 POST ALERT SB: 32A0148 FOR NHA/OTHER SYS DET SEE: 32-11-02-04T	155162	RF

ILLUSTRATION ITEMS NOT ON PARTS LIST ARE NOT APPLICABLE

- ITEM NOT ILLUSTRATED

BOEING PROPRIETARY - Copyright © - Unpublished Work - See title page for details.

FIG ITEM	PART NUMBER	1 2 3 4 5 6 7 NOMENCLATURE	EFFECT FROM TO	UNITS PER ASSY
3T				
- 18	015T1504-40	STRUT ASSY-MLG SHOCK (PLACARDS AND MARKINGS ONLY) POSITION DATA: RH COMPONENT MAINT MANUAL REF: 32-11-40 POST ALERT SB: 32A0148 FOR NHA/OTHER SYS DET SEE: 32-11-02-04T	155162	RF
- 18	015T1504-48	STRUT ASSY-MLG SHOCK (PLACARDS AND MARKINGS ONLY) POSITION DATA: RH COMPONENT MAINT MANUAL REF: 32-11-40 POST ALERT SB: 32A0148 FOR NHA/OTHER SYS DET SEE: 32-11-02-04T	155162	RF
- 18	015T1504-38	STRUT ASSY-MLG SHOCK (PLACARDS AND MARKINGS ONLY) POSITION DATA: RH COMPONENT MAINT MANUAL REF: 32-11-40 ALTERED FROM PART NUMBER: 161T1100-128 POST ALERT SB: 32A0148 FOR NHA/OTHER SYS DET SEE: 32-11-02-04T	155162	RF
- 18	015T1504-52	STRUT ASSY-MLG SHOCK (PLACARDS AND MARKINGS ONLY) POSITION DATA: RH COMPONENT MAINT MANUAL REF: 32-11-40 POST ALERT SB: 32A0148 FOR NHA/OTHER SYS DET SEE: 32-11-02-04T	155162	RF

ILLUSTRATION ITEMS NOT ON PARTS LIST ARE NOT APPLICABLE

- ITEM NOT ILLUSTRATED

BOEING PROPRIETARY - Copyright © - Unpublished Work - See title page for details.

FIG ITEM	PART NUMBER	1 2 3 4 5 6 7 NOMENCLATURE	EFFECT FROM TO	UNITS PER ASSY
3T				
- 18	015T1504-54	STRUT ASSY-MLG SHOCK (PLACARDS AND MARKINGS ONLY) POSITION DATA: RH COMPONENT MAINT MANUAL REF: 32-11-40 POST ALERT SB: 32A0148 FOR NHA/OTHER SYS DET SEE: 32-11-02-04T	155162	RF
- 18	015T1504-62	STRUT ASSY-MLG SHOCK (PLACARDS AND MARKINGS ONLY) POSITION DATA: RH COMPONENT MAINT MANUAL REF: 32-11-40 POST ALERT SB: 32A0148 FOR NHA/OTHER SYS DET SEE: 32-11-02-04T	155162	RF
- 18	015T1504-64	STRUT ASSY-MLG SHOCK (PLACARDS AND MARKINGS ONLY) POSITION DATA: RH COMPONENT MAINT MANUAL REF: 32-11-40 POST ALERT SB: 32A0148 FOR NHA/OTHER SYS DET SEE: 32-11-02-04T	155162	RF
- 18	015T1504-70	STRUT ASSY-MLG SHOCK (PLACARDS AND MARKINGS ONLY) POSITION DATA: RH COMPONENT MAINT MANUAL REF: 32-11-40 POST ALERT SB: 32A0148 FOR NHA/OTHER SYS DET SEE: 32-11-02-04T	155162	RF

ILLUSTRATION ITEMS NOT ON PARTS LIST ARE NOT APPLICABLE

- ITEM NOT ILLUSTRATED

BOEING PROPRIETARY - Copyright © - Unpublished Work - See title page for details.

FIG ITEM	PART NUMBER	1 2 3 4 5 6 7 NOMENCLATURE	EFFECT FROM TO	UNITS PER ASSY
3T				
- 18	015T1504-60	STRUT ASSY-MLG SHOCK (PLACARDS AND MARKINGS ONLY) POSITION DATA: RH COMPONENT MAINT MANUAL REF: 32-11-40 POST ALERT SB: 32A0148 FOR NHA/OTHER SYS DET SEE: 32-11-02-04T	155162	RF
- 18	161T1100-404	STRUT ASSY-SHOCK MLG (PLACARDS AND MARKINGS ONLY) POSITION DATA: RH MISCELLANEOUS DATA: FOR SPARES PROCURE LOWER COMPONENTS COMPONENT MAINT MANUAL REF: 32-11-40 FOR NHA/OTHER SYS DET SEE: 32-11-02-04T	155162	RF
- 18	161T1100-446	STRUT ASSY-SHOCK MLG (PLACARDS AND MARKINGS ONLY) POSITION DATA: RH MISCELLANEOUS DATA: FOR SPARES PROCURE LOWER COMPONENTS COMPONENT MAINT MANUAL REF: 32-11-40 FOR NHA/OTHER SYS DET SEE: 32-11-02-04T	155162	RF
- 18	161T1100-448	STRUT ASSY-SHOCK MLG (PLACARDS AND MARKINGS ONLY) POSITION DATA: RH MISCELLANEOUS DATA: FOR SPARES PROCURE LOWER COMPONENTS COMPONENT MAINT MANUAL REF: 32-11-40 FOR NHA/OTHER SYS DET SEE: 32-11-02-04T	155162	RF

ILLUSTRATION ITEMS NOT ON PARTS LIST ARE NOT APPLICABLE

- ITEM NOT ILLUSTRATED

BOEING PROPRIETARY - Copyright © - Unpublished Work - See title page for details.

FIG ITEM	PART NUMBER	1 2 3 4 5 6 7 NOMENCLATURE	EFFECT FROM TO	UNITS PER ASSY
3T				
- 18	161T1100-462	STRUT ASSY-SHOCK MLG (PLACARDS AND MARKINGS ONLY) POSITION DATA: RH MISCELLANEOUS DATA: FOR SPARES PROCURE LOWER COMPONENTS COMPONENT MAINT MANUAL REF: 32-11-40 FOR NHA/OTHER SYS DET SEE: 32-11-02-04T	155162	RF
- 18	161T1100-466	STRUT ASSY-SHOCK MLG (PLACARDS AND MARKINGS ONLY) POSITION DATA: RH MISCELLANEOUS DATA: FOR SPARES PROCURE LOWER COMPONENTS COMPONENT MAINT MANUAL REF: 32-11-40 FOR NHA/OTHER SYS DET SEE: 32-11-02-04T	155162	RF
- 18	161T1100-480	STRUT ASSY-SHOCK MLG (PLACARDS AND MARKINGS ONLY) POSITION DATA: RH MISCELLANEOUS DATA: FOR SPARES PROCURE LOWER COMPONENTS COMPONENT MAINT MANUAL REF: 32-11-40 FOR NHA/OTHER SYS DET SEE: 32-11-02-04T	155162	RF
25	BAC27ELG21	.MARKER-ALUMINUM FOIL	155162	1
35	BAC27TLG12	.MARKER- PLACARD CONTENT: BMS 3-38 OR BMS 3-27 ONLY POST ALERT SB: 32A0192	155162	1

ILLUSTRATION ITEMS NOT ON PARTS LIST ARE NOT APPLICABLE

- ITEM NOT ILLUSTRATED

BOEING PROPRIETARY - Copyright © - Unpublished Work - See title page for details.

FIG ITEM	PART NUMBER	1 2 3 4 5 6 7 NOMENCLATURE	EFFECT FROM TO	UNITS PER ASSY
3T				
37	BAC27TLG12	.MARKER- PLACARD CONTENT: BMS 3-27 ONLY POST ALERT SB: 32A0148 PRE ALERT SB: 32A0192R1	155162	1
43	BAC27TLG13	.MARKER- POSITION DATA: LH SIDE POST ALERT SB: 32A0148 PRE ALERT SB: 32A0192R1	155162	1
45	BAC27TLG13	.MARKER- POSITION DATA: LH SIDE POST ALERT SB: 32A0192	155162	1
47	BAC27TLG14	.MARKER- POSITION DATA: RH SIDE POST ALERT SB: 32A0192	155162	1
48	BAC27TLG14	.MARKER- POSITION DATA: RH SIDE POST ALERT SB: 32A0148 PRE ALERT SB: 32A0192R1	155162	1
50	44PB134-4441	.SEAL- SUPPLIER CODE: V00266 SPECIFICATION NUMBER: BACS11AK2	155162	2
55	BACS38E8-37	.STRAP-	155162	2
60	162T1103-1	.NAMEPLATE- USED ON: 161T1100-19 161T1100-20 161T1100-119 161T1100-120 161T1100-77 161T1100-78 161T1100-41 161T1100-42 161T1100-55 161T1100-56	155162	1

ILLUSTRATION ITEMS NOT ON PARTS LIST ARE NOT APPLICABLE

– ITEM NOT ILLUSTRATED

BOEING PROPRIETARY - Copyright © - Unpublished Work - See title page for details.

FIG ITEM	PART NUMBER	1 2 3 4 5 6 7 NOMENCLATURE	EFFECT FROM TO	UNITS PER ASSY
3T				
60		161T1100-47		
		161T1100-48		
		161T1100-63		
		161T1100-64		
		161T1100-67		
		161T1100-68		
		161T1100-71		
		161T1100-72		
		161T1100-87		
		161T1100-88		
		161T1100-89		
		161T1100-90		
		161T1100-115		
		161T1100-127		
		161T1100-128		
		161T1100-145		
		161T1100-146		
		161T1100-167		
		161T1100-168		
		161T1100-225		
		161T1100-226		
		161T1100-257		
		161T1100-258		
		161T1100-259		
		161T1100-260		
		161T1100-279		
		161T1100-280		
		161T1100-281		
		161T1100-282		
		161T1100-321		
		161T1100-322		
		161T1100-339		
		161T1100-340		
		161T1100-345		
		161T1100-346		
		161T1100-357		
		161T1100-358		
		161T1100-395		
		161T1100-396		
		161T1100-377		
		161T1100-378		
		161T1100-361		
		161T1100-403		
		161T1100-404		
		POST ALERT SB:		
		32A0148		

ILLUSTRATION ITEMS NOT ON PARTS LIST ARE NOT APPLICABLE

– ITEM NOT ILLUSTRATED

BOEING PROPRIETARY - Copyright © - Unpublished Work - See title page for details.

FIG ITEM	PART NUMBER	1 2 3 4 5 6 7 NOMENCLATURE	EFFECT FROM TO	UNITS PER ASSY
3T				
60	162T1103-1	.NAMEPLATE-	155162	1
		OPTIONAL PART:		
		161T1103-2		
		USED ON:		
		161T1100-447		
		161T1100-448		
		161T1100-445		
		161T1100-446		
		161T1100-461		
		161T1100-462		
		161T1100-465		
		161T1100-466		
		161T1100-479		
		161T1100-480		
		161T1100-481		
65	162T1103-2	.NAMEPLATE-	155162	1
		USED ON:		
		161T1100-19		
		161T1100-20		
		161T1100-119		
		161T1100-120		
		161T1100-77		
		161T1100-78		
		161T1100-41		
		161T1100-42		
		161T1100-55		
		161T1100-56		
		161T1100-47		
		161T1100-48		
		161T1100-63		
		161T1100-64		
		161T1100-67		
		161T1100-68		
		161T1100-71		
		161T1100-72		
		161T1100-87		
		161T1100-88		
		161T1100-89		
		161T1100-90		
		161T1100-115		
		161T1100-127		
		161T1100-128		
		161T1100-145		
		161T1100-146		
		161T1100-167		
		161T1100-168		
		161T1100-225		
		161T1100-226		
		161T1100-257		

ILLUSTRATION ITEMS NOT ON PARTS LIST ARE NOT APPLICABLE

– ITEM NOT ILLUSTRATED

BOEING PROPRIETARY - Copyright © - Unpublished Work - See title page for details.

FIG ITEM	PART NUMBER	1 2 3 4 5 6 7 NOMENCLATURE	EFFECT FROM TO	UNITS PER ASSY
3T				
65		161T1100-258		
		161T1100-259		
		161T1100-260		
		161T1100-279		
		161T1100-280		
		161T1100-281		
		161T1100-282		
		161T1100-321		
		161T1100-322		
		161T1100-339		
		161T1100-340		
		161T1100-345		
		161T1100-346		
		161T1100-357		
		161T1100-358		
		161T1100-395		
		161T1100-396		
		161T1100-377		
		161T1100-378		
		161T1100-361		
		161T1100-403		
		161T1100-404		
65	162T1103-2	.NAMEPLATE-	155162	1
		OPTIONAL PART:		
		161T1103-1		
		USED ON:		
		161T1100-447		
		161T1100-448		
		161T1100-445		
		161T1100-446		
		161T1100-461		
		161T1100-462		
		161T1100-465		
		161T1100-466		
		161T1100-479		
		161T1100-480		
		161T1100-481		

ILLUSTRATION ITEMS NOT ON PARTS LIST ARE NOT APPLICABLE

– ITEM NOT ILLUSTRATED

BOEING PROPRIETARY - Copyright © - Unpublished Work - See title page for details.

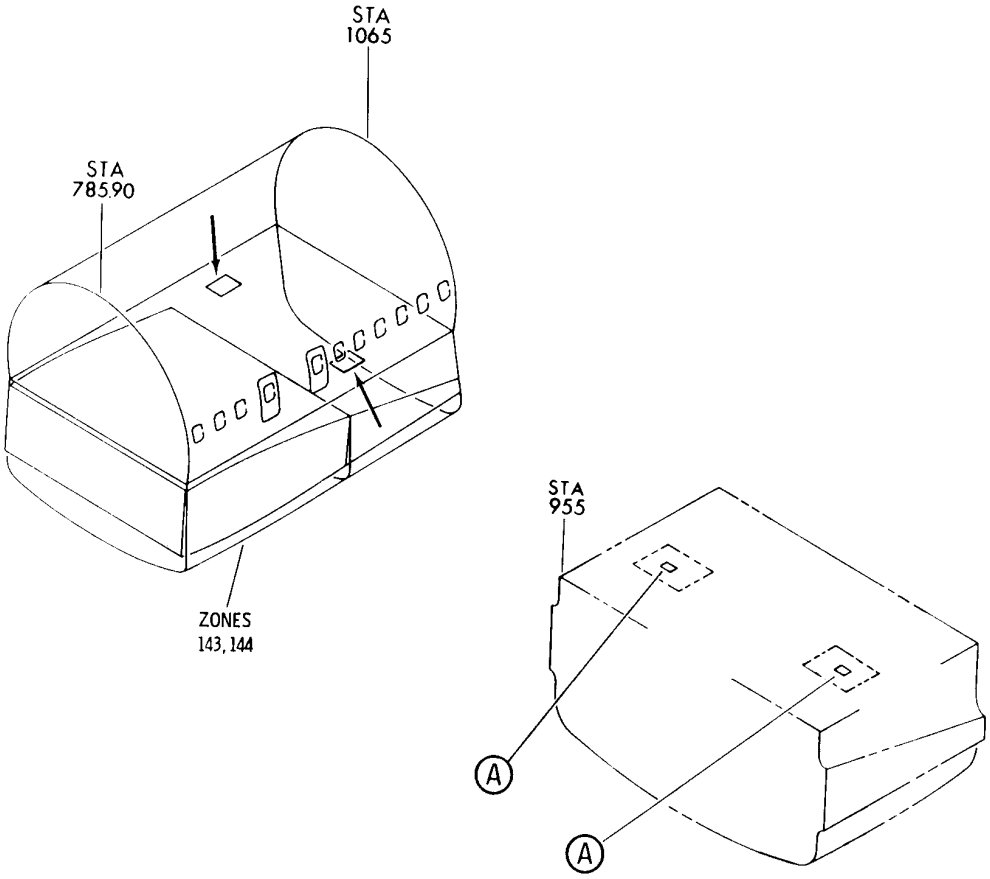

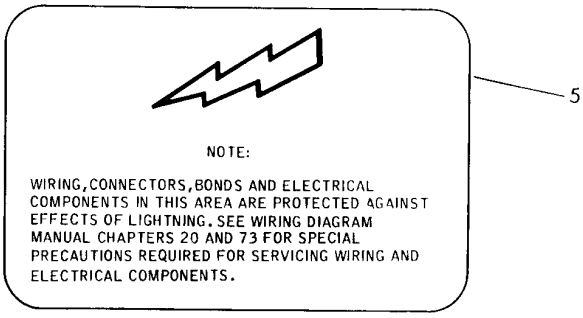

V 11225301 REV 168

DECAL INSTL-MAIN WHEEL WELL LIGHTNING STRIKE
FIGURE 1

BOEING PROPRIETARY - Copyright © - Unpublished Work - See title page for details.

FIG ITEM	PART NUMBER	1 2 3 4 5 6 7 NOMENCLATURE	EFFECT FROM TO	UNITS PER ASSY
1				
		DECAL INSTL-MAIN WHEEL WELL LIGHTNING STRIKE		
- 1	287T0072-4	DECAL INSTL-MAIN WHEEL WELL LIGHTNING STRIKE		RF
		FOR NHA SEE: 24-00-57-02		
5	BAC27NEL1122	.MARKER-INSTRUCTIONS		2

ILLUSTRATION ITEMS NOT ON PARTS LIST ARE NOT APPLICABLE

- ITEM NOT ILLUSTRATED

BOEING PROPRIETARY - Copyright © - Unpublished Work - See title page for details.