NACELLE AND POWER PLANT

BOEING PROPRIETARY - Copyright © - Unpublished Work - See title page for details.

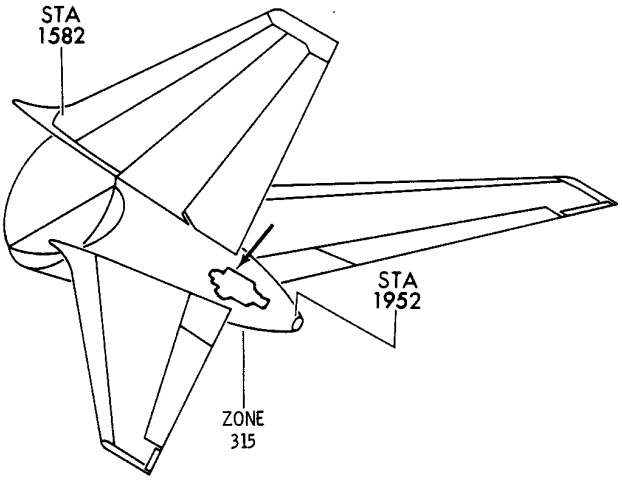

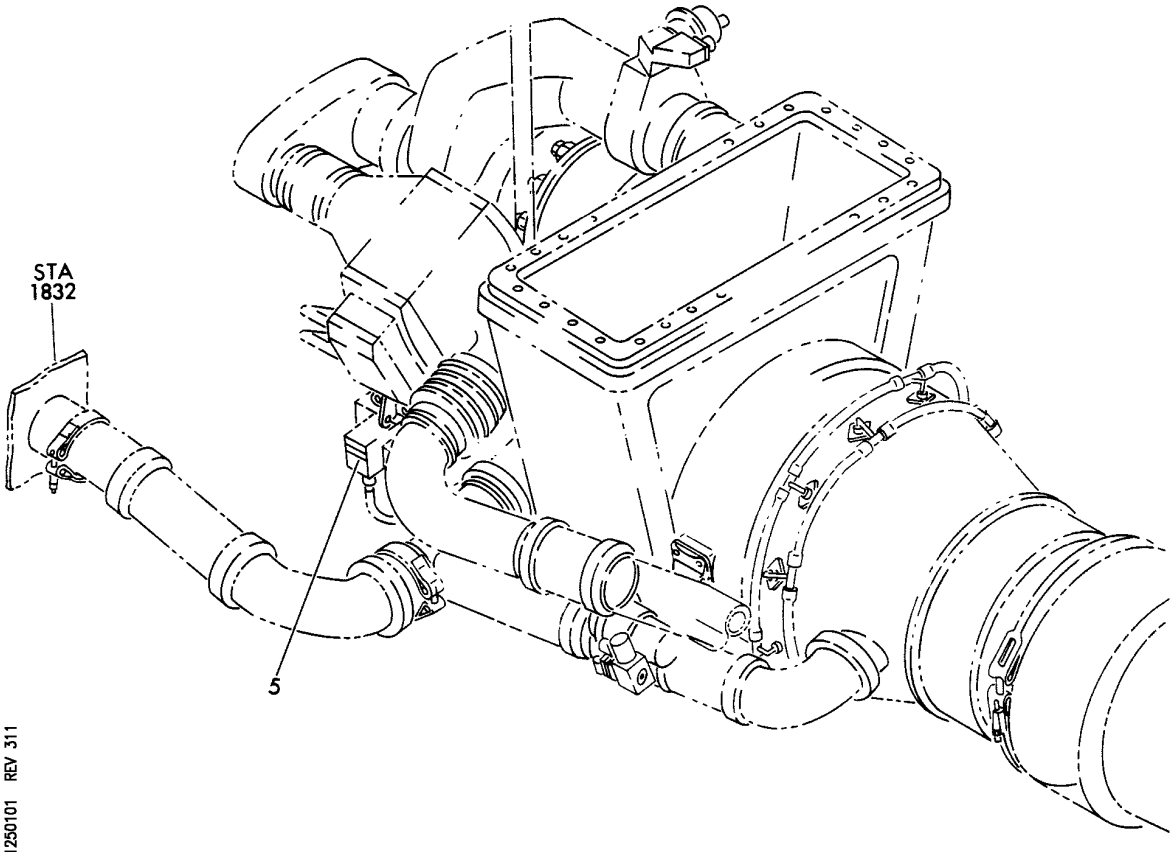

V 11250101 REV 311

OIL AND MARKER INSTL-APU
FIGURE 1

BOEING PROPRIETARY - Copyright © - Unpublished Work - See title page for details.

FIG ITEM	PART NUMBER	1 2 3 4 5 6 7 NOMENCLATURE	EFFECT FROM TO	UNITS PER ASSY
1				
		OIL AND MARKER INSTL-APU		
- 1	351T0150-1	OIL AND MARKER INSTL-APU	163999	RF
		FOR NHA SEE:		
		49-00-01-01		
- 1	351T0150-11	OIL AND MARKER INSTL-APU	155162	RF
		FOR NHA SEE:		
		49-00-01-01		
5	BAC27TPP0024	.MARKER-ALUMINUM FOIL-	163999	1
		PLACARD CONTENT:		
		ESSO OR EXXON TURBO		
		OIL 2380		
5	BAC27TPP0613	.MARKER-ALUMINUM FOIL-	155162	1
		PLACARD CONTENT:		
		EXXON ETO 85		

ILLUSTRATION ITEMS NOT ON PARTS LIST ARE NOT APPLICABLE

- ITEM NOT ILLUSTRATED

BOEING PROPRIETARY - Copyright © - Unpublished Work - See title page for details.

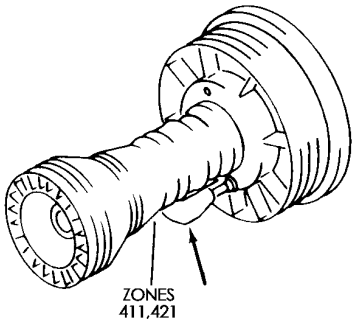

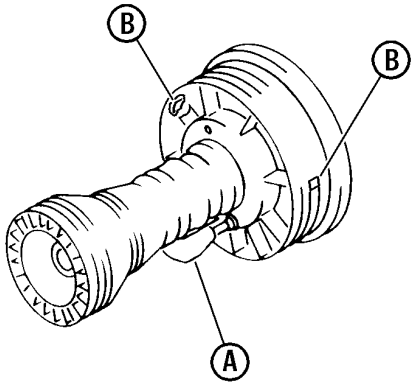

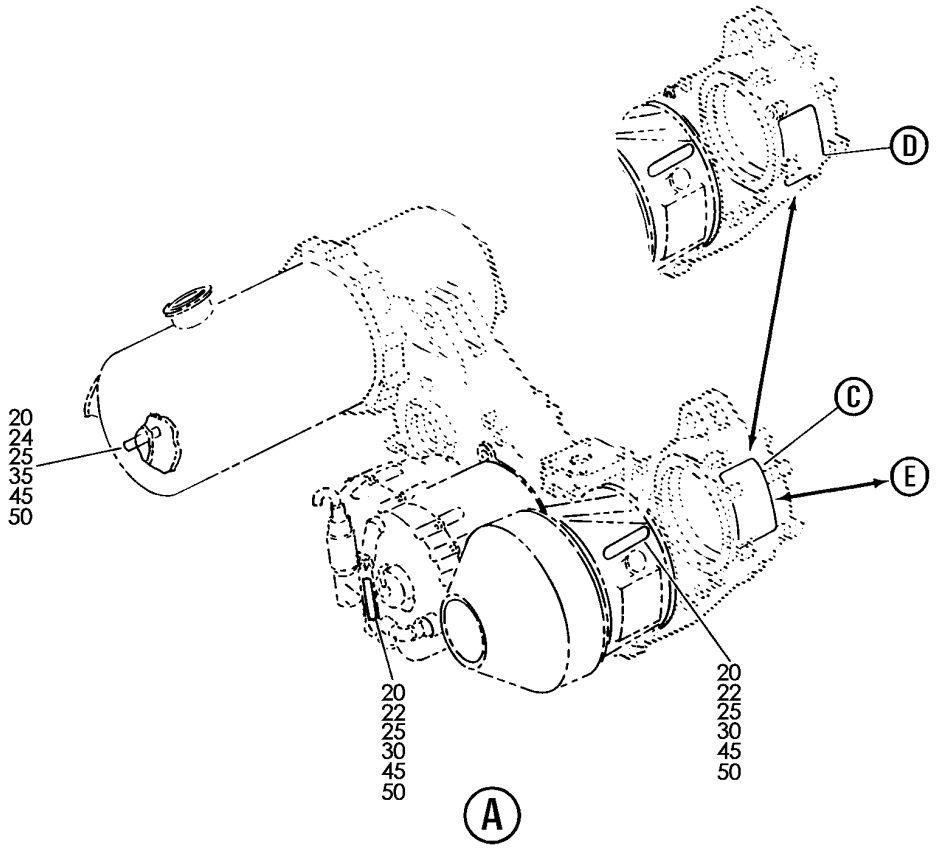

V 11250404 SHT 1 REV 240

OIL AND MARKER INSTL-PW4000 ENG AND ACCESSORIES
FIGURE 4 (SHEET 1)

BOEING PROPRIETARY - Copyright © - Unpublished Work - See title page for details.

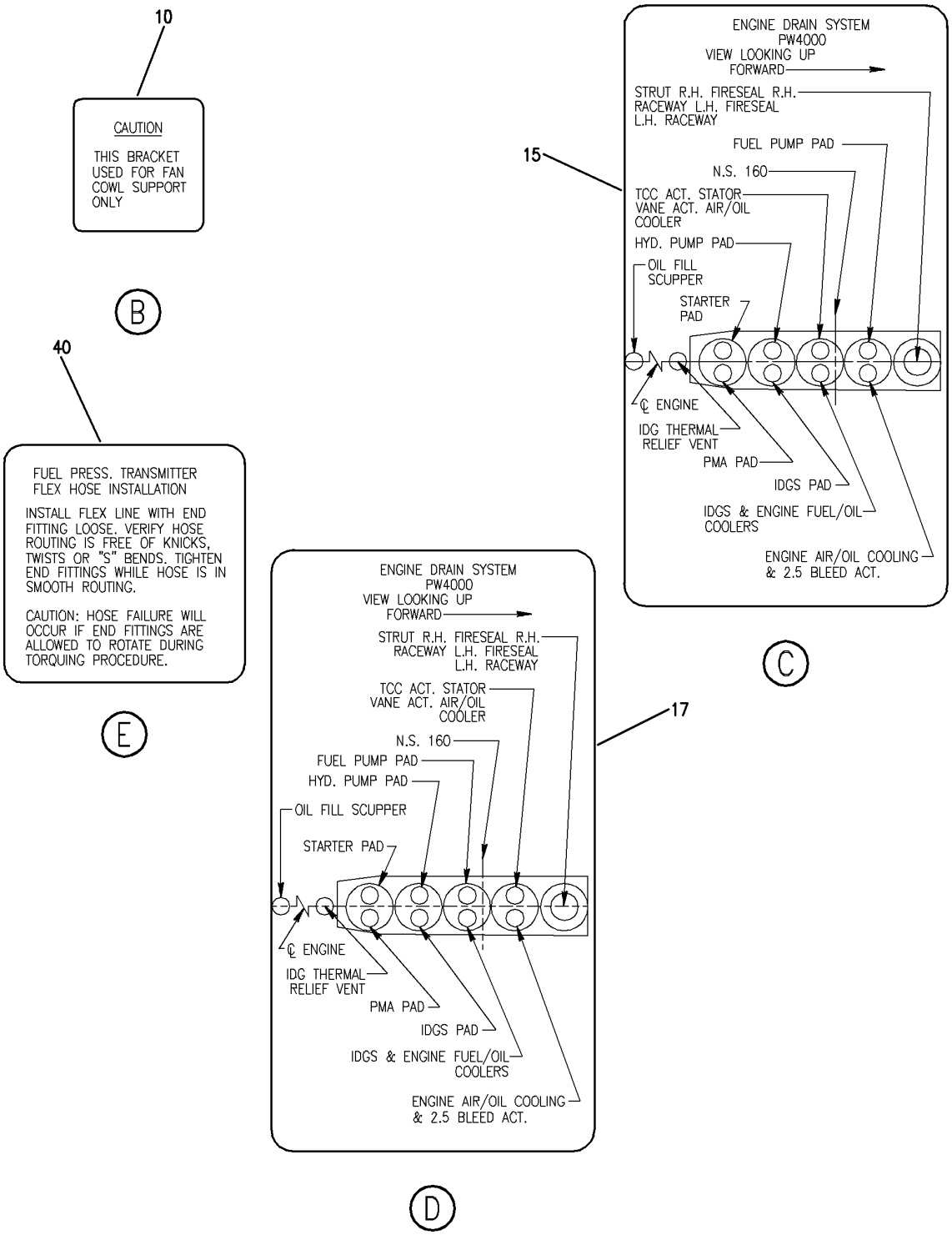

V 11250404 SHT 2 REV 240

OIL AND MARKER INSTL-PW4000 ENG AND ACCESSORIES
FIGURE 4 (SHEET 2)

BOEING PROPRIETARY - Copyright © - Unpublished Work - See title page for details.

FIG ITEM	PART NUMBER	1 2 3 4 5 6 7 NOMENCLATURE	EFFECT FROM TO	UNITS PER ASSY
4				
		OIL AND MARKER INSTL-PW4000		
		ENG AND ACCESSORIES		
- 1	310T4070-1	OIL AND MARKER INSTL-PW4000		RF
		ENG AND ACCESSORIES		
		VARIABLE DRAWING REF:		
		310T4070-5		
		310T4070-8		
		FOR NHA SEE:		
		71-00-01-02		
10	BAC27EPP0489	.MARKER-ALUMINUM FOIL		2
15	BAC27TPPS5712	.MARKER-ALUMINUM FOIL		1
20	BAC27TPP0024	.MARKER-ALUMINUM FOIL-	163999	3
		PLACARD CONTENT:		
		ESSO OR EXXON TURBO OIL		
		2380		

ILLUSTRATION ITEMS NOT ON PARTS LIST ARE NOT APPLICABLE

- ITEM NOT ILLUSTRATED

BOEING PROPRIETARY - Copyright © - Unpublished Work - See title page for details.

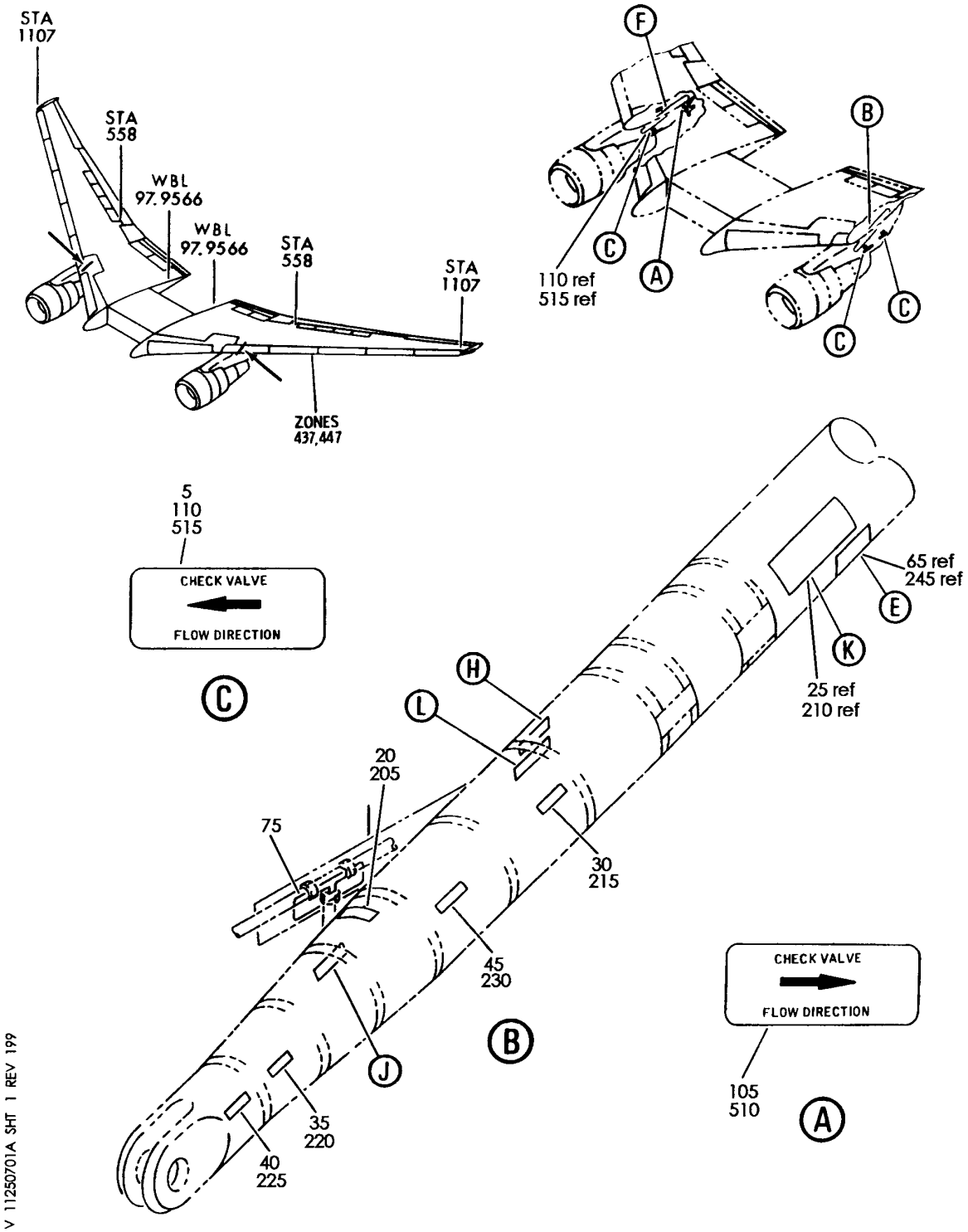

HYDRAULIC INSTL-SECT. 31 ENG FAIRING AFT (PLACARDS AND MARKINGS ONLY)
FIGURE 1A (SHEET 1)

BOEING PROPRIETARY - Copyright © - Unpublished Work - See title page for details.

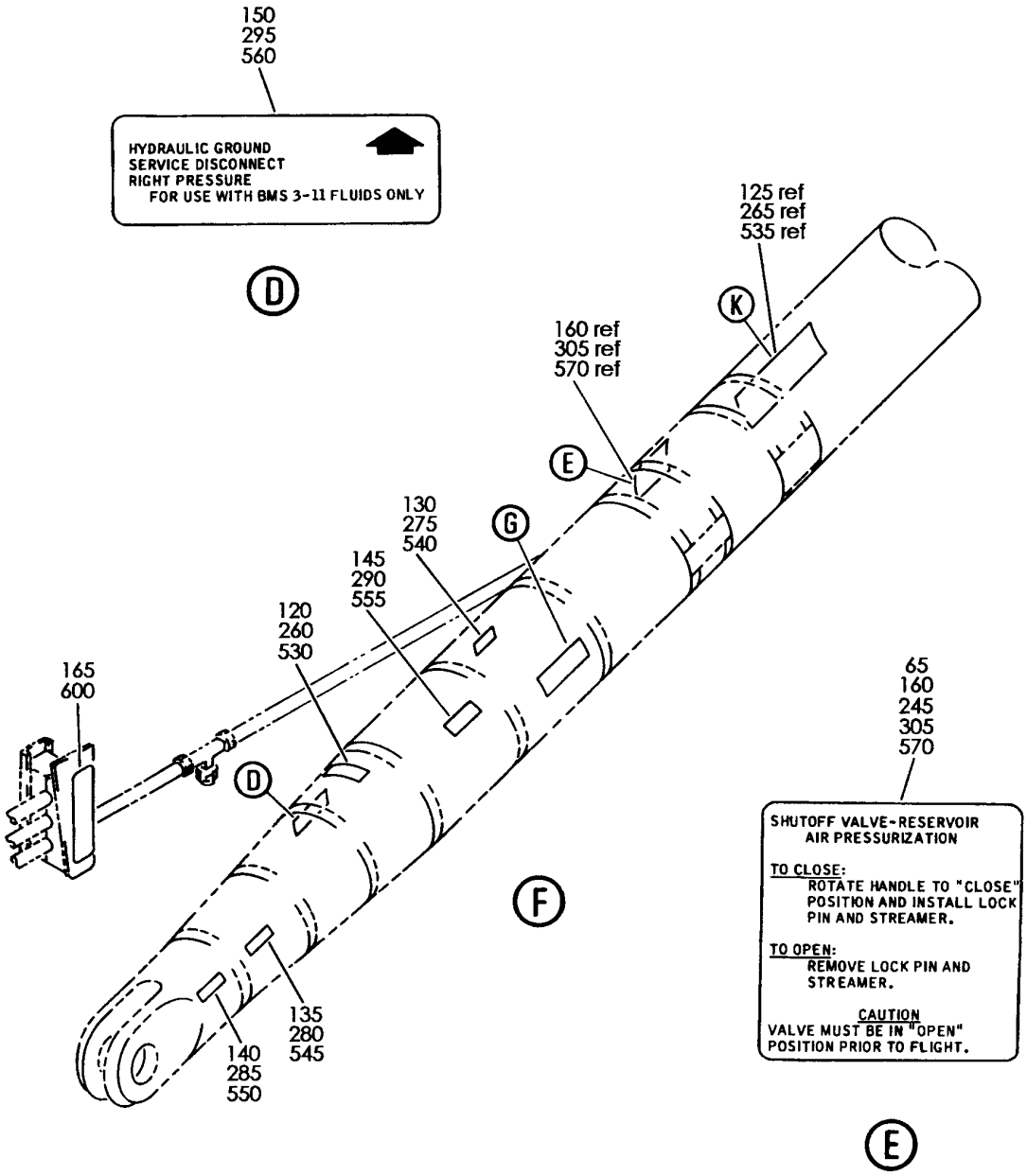

V 11250701A SHT 2 REV 199

HYDRAULIC INSTL-SECT. 31 ENG FAIRING AFT (PLACARDS AND MARKINGS ONLY)
FIGURE 1A (SHEET 2)

BOEING PROPRIETARY - Copyright © - Unpublished Work - See title page for details.

155
300
565

HYDRAULIC GROUND
SERVICE DISCONNECT
RIGHT RETURN
FOR USE WITH BMS 3-11 FLUIDS ONLY

G

60
240

HYDRAULIC GROUND
SERVICE DISCONNECT
LEFT RETURN
FOR USE WITH BMS 3-11 FLUIDS ONLY

H

HYDRAULIC RESERVOIR GROUND TEST AIR
PRESSURIZATION AND DE-PRESSURIZATION

1. PRESSURIZATION: CONNECT GROUND SERVICE HOSE TO PORT "T". CONNECT PRESSURE GAGE TO PORT "GA". PRESSURIZE RESERVOIR WITH AIR AT 40 TO 45 P.S.I. READING ON GAGE. DO NOT EXCEED 75 P.S.I. AT PORT "T".

2. DE-PRESSURIZATION: ENSURE THAT AIR SUPPLY IS "OFF". DEPRESS KNURLED BUTTON ON BLEED VALVE FOR AIR DE-PRESSURIZATION. CAUTION: "BMS 3-11" VAPOR.

25
125
210
265
535

K

70
250

HYDRAULIC GROUND SERVICE
DISCONNECT-LEFT RETURN

FOR USE WITH BMS 3-11 FLUIDS ONLY

L

50
235

HYDRAULIC GROUND
SERVICE DISCONNECT
LEFT PRESSURE
FOR USE WITH BMS 3-11 FLUIDS ONLY

J

V 11250701A SHT 3 REV 199

HYDRAULIC INSTL-SECT. 31 ENG FAIRING AFT (PLACARDS AND MARKINGS ONLY)
FIGURE 1A (SHEET 3)

BOEING PROPRIETARY - Copyright © - Unpublished Work - See title page for details.

FIG ITEM	PART NUMBER	1 2 3 4 5 6 7 NOMENCLATURE	EFFECT FROM TO	UNITS PER ASSY
1A				
		HYDRAULIC INSTL-SECT. 31		
		ENG FAIRING AFT (PLACARDS		
		AND MARKINGS ONLY)		
- 1	272T3100-5	HYDRAULIC INSTL-ENG FAIRING		RF
		(PLACARDS AND MARKINGS		
		ONLY)		
		PRATT & WHITNEY		
		POSITION DATA:		
		SECT. 31 NAC STA 237.92		
		TO 383.40 AFT L		
		VARIABLE DRAWING REF:		
		272T3100-5317		
		272T3100-5347		
		272T3100-5361		
		272T3100-7003		
		FOR NHA/OTHER SYS DET SEE:		
		29-00-00-04		
- 10	272T0171-3	.MARKER INSTL-		1
		POSITION DATA:		
		NAC STA 240.85		
20	BAC27THY0062	..MARKER-ALUMINUM FOIL		1
		PRESSURE & CD FILTER		
25	BAC27THY0064	..MARKER-ALUMINUM FOIL		1
30	BAC27THY0066	..MARKER-ALUMINUM FOIL-		1
		PLACARD CONTENT:		
		PUMP-ELECTRIC HYDR, L		
		M231		
35	BAC27THY0072	..MARKER-ALUMINUM FOIL		1
		PLACARD CONTENT:		
		RSVR-HYDR QTY, L		
		M338		
40	BAC27THY0078	..MARKER-ALUMINUM FOIL		1
		PLACARD CONTENT:		
		RSVR-HYDR TEMP, L		
		M344		
45	BAC27THY0097	..MARKER-ALUMINUM FOIL		1
		PLACARD CONTENT:		
		V106 ISOLATION VALVE		
		S330, T/R, L		
50	BAC27THY0131	..MARKER-ALUMINUM FOIL		1
60	BAC27THY0132	..MARKER-ALUMINUM FOIL		1
65	BAC27THY0146	..MARKER-ALUMINUM FOIL		1
75	BAC27EHY135	.MARKER-ALUMINUM FOIL-		1
		PLACARD CONTENT:		
		SPECIAL ORIFICE CAP		
		ASSEMBLY REPLACE ONLY		
		WITH PART NO. 69B83900-2		

ILLUSTRATION ITEMS NOT ON PARTS LIST ARE NOT APPLICABLE

- ITEM NOT ILLUSTRATED

BOEING PROPRIETARY - Copyright © - Unpublished Work - See title page for details.

FIG ITEM	PART NUMBER	1 2 3 4 5 6 7 NOMENCLATURE	EFFECT FROM TO	UNITS PER ASSY
1A				
- 100	272T3100-6	HYDRAULIC INSTL-ENG FAIRING (PLACARDS AND MARKINGS ONLY) PRATT & WHITNEY POSITION DATA: SECT. 31 NAC STA 237.92 TO 383.40 AFT RH VARIABLE DRAWING REF: 272T3100-5218 272T3100-5336 272T3100-7004 FOR NHA/OTHER SYS DET SEE: 29-00-00-04		RF
- 115	272T0171-4	.MARKER INSTL- POSITION DATA: NAC STA 240.85		1
120	BAC27THY0063	..MARKER-ALUMINUM FOIL PLACARD CONTENT: PRESSURE & CD FILTER		1
125	BAC27THY0064	..MARKER-ALUMINUM FOIL		1
130	BAC27THY0069	..MARKER-ALUMINUM FOIL PLACARD CONTENT: M234 PUMP-ELECTRIC HYDR, R		1
135	BAC27THY0074	..DECAL-ALUMINUM FOIL PLACARD CONTENT: M340 RSVR-HYDR QTY, R RSVR-HYDR QTY, R		1
140	BAC27THY0080	..DECAL-ALUMINUM FOIL PLACARD CONTENT: M346 RSVR-HYDR TEMP, R RSVR-HYDR TEMP, R		1
145	BAC27THY0098	..MARKER-ALUMINUM FOIL PLACARD CONTENT: V107 S331 ISOLATION VALVE T/R, R T/R, R		1
150	BAC27THY0129	..MARKER-ALUMINUM FOIL		1
155	BAC27THY0130	..MARKER-ALUMINUM FOIL		1
160	BAC27THY0146	..MARKER-ALUMINUM FOIL		1
165	BAC27EHY135	.MARKER-ALUMINUM FOIL- PLACARD CONTENT: SPECIAL ORIFICE CAP ASSEMBLY REPLACE ONLY WITH PART NO. 69B83900-2		1

ILLUSTRATION ITEMS NOT ON PARTS LIST ARE NOT APPLICABLE

- ITEM NOT ILLUSTRATED

BOEING PROPRIETARY - Copyright © - Unpublished Work - See title page for details.

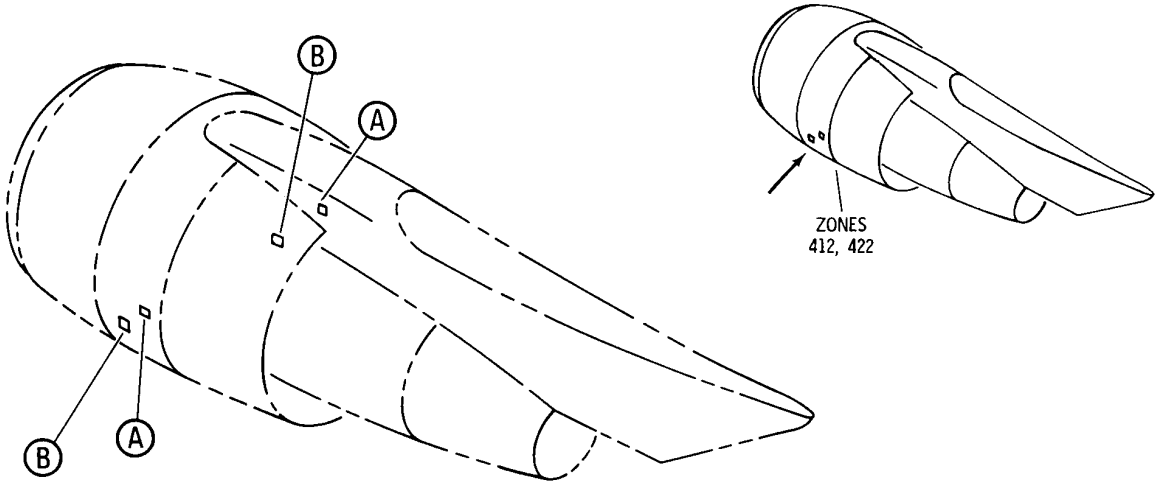

20

NOTE:

WIRING, CONNECTORS, BONDS AND ELECTRICAL COMPONENTS IN THIS AREA ARE PROTECTED AGAINST EFFECTS OF LIGHTNING. SEE WIRING DIAGRAM MANUAL CHAPTERS 20 AND 73 FOR SPECIAL PRECAUTIONS REQUIRED FOR SERVICING WIRING AND ELECTRICAL COMPONENTS.

B

15

WARNING

DO NOT STAND BETWEEN FAN COWL AND ENGINE UNLESS FAN COWL IS SUPPORTED BY BOTH HOLD OPEN RODS. AN EXPOSED RED BAND WITH THE WORD "UNLOCKED" ON HOLD OPEN ROD INDICATES THE ROD IS NOT LOCKED. BOTH RODS MUST BE FULLY EXTENDED AND THE RED BAND MUST BE COVERED FOR RODS TO BE LOCKED. SERIOUS INJURY MAY RESULT FROM FALLING FAN COWL PANEL IF RODS ARE NOT INSTALLED AND LOCKED.

A

V 11250705 REV 194

COWL ASSY-FAN (PLACARDS AND MARKINGS ONLY)
FIGURE 5

BOEING PROPRIETARY - Copyright © - Unpublished Work - See title page for details.

FIG ITEM	PART NUMBER	1 2 3 4 5 6 7 NOMENCLATURE	EFFECT FROM TO	UNITS PER ASSY
5		COWL ASSY-FAN (PLACARDS AND MARKINGS ONLY)		
- 5	314T4110-5SP	COWL ASSY-FAN (PLACARDS AND MARKINGS ONLY) POSITION DATA: LH COMPONENT MAINT MANUAL REF: 71-11-53 FOR NHA/OTHER SYS DET SEE: 71-11-04-05		RF
- 5	314T4110-9SP	COWL ASSY-FAN (PLACARDS AND MARKINGS ONLY) POSITION DATA: LH COMPONENT MAINT MANUAL REF: 71-11-53 FOR NHA/OTHER SYS DET SEE: 71-11-04-05		RF
- 5	314T4110-13SP	COWL ASSY-FAN (PLACARDS AND MARKINGS ONLY) POSITION DATA: LH COMPONENT MAINT MANUAL REF: 71-11-53 FOR NHA/OTHER SYS DET SEE: 71-11-04-05		RF
- 5	314T4110-17SP	COWL ASSY-FAN (PLACARDS AND MARKINGS ONLY) POSITION DATA: LH COMPONENT MAINT MANUAL REF: 71-11-53 FOR NHA/OTHER SYS DET SEE: 71-11-04-05		RF
- 5	314T4110-15SP	COWL ASSY-FAN (PLACARDS AND MARKINGS ONLY) POSITION DATA: LH		RF
- 5	314T4085-1SP	COWL ASSY-FAN (PLACARDS AND MARKINGS ONLY) POSITION DATA: LH COMPONENT MAINT MANUAL REF: 71-11-55 FOR NHA/OTHER SYS DET SEE: 71-11-04-05		RF

ILLUSTRATION ITEMS NOT ON PARTS LIST ARE NOT APPLICABLE

- ITEM NOT ILLUSTRATED

BOEING PROPRIETARY - Copyright © - Unpublished Work - See title page for details.

FIG ITEM	PART NUMBER	1 2 3 4 5 6 7 NOMENCLATURE	EFFECT FROM TO	UNITS PER ASSY
5				
- 5	314T4085-7SP	COWL ASSY-FAN (PLACARDS AND MARKINGS ONLY) POSITION DATA: LH COMPONENT MAINT MANUAL REF: 71-11-55 FOR NHA/OTHER SYS DET SEE: 71-11-04-05		RF
- 5	314T4085-9SP	COWL ASSY-FAN (PLACARDS AND MARKINGS ONLY) POSITION DATA: LH COMPONENT MAINT MANUAL REF: 71-11-55 FOR NHA/OTHER SYS DET SEE: 71-11-04-05		RF
- 5	314T4085-13SP	COWL ASSY-FAN (PLACARDS AND MARKINGS ONLY) POSITION DATA: LH COMPONENT MAINT MANUAL REF: 71-11-55 FOR NHA/OTHER SYS DET SEE: 71-11-04-05		RF
- 5	314T4085-11SP	COWL ASSY-FAN (PLACARDS AND MARKINGS ONLY) POSITION DATA: LH COMPONENT MAINT MANUAL REF: 71-11-55 FOR NHA/OTHER SYS DET SEE: 71-11-04-05		RF
- 10	314T4110-8SP	COWL ASSY-FAN (PLACARDS AND MARKINGS ONLY) POSITION DATA: RH COMPONENT MAINT MANUAL REF: 71-11-53 FOR NHA/OTHER SYS DET SEE: 71-11-04-05		RF
- 10	314T4110-10SP	COWL ASSY-FAN (PLACARDS AND MARKINGS ONLY) POSITION DATA: RH COMPONENT MAINT MANUAL REF: 71-11-53 FOR NHA/OTHER SYS DET SEE: 71-11-04-05		RF

ILLUSTRATION ITEMS NOT ON PARTS LIST ARE NOT APPLICABLE

- ITEM NOT ILLUSTRATED

BOEING PROPRIETARY - Copyright © - Unpublished Work - See title page for details.

FIG ITEM	PART NUMBER	1 2 3 4 5 6 7 NOMENCLATURE	EFFECT FROM TO	UNITS PER ASSY
5				
- 10	314T4110-14SP	COWL ASSY-FAN (PLACARDS AND MARKINGS ONLY) POSITION DATA: RH COMPONENT MAINT MANUAL REF: 71-11-53 FOR NHA/OTHER SYS DET SEE: 71-11-04-05		RF
- 10	314T4110-18SP	COWL ASSY-FAN (PLACARDS AND MARKINGS ONLY) POSITION DATA: RH COMPONENT MAINT MANUAL REF: 71-11-53 FOR NHA/OTHER SYS DET SEE: 71-11-04-05		RF
- 10	314T4085-8SP	FAN COWL-(PLACARDS AND MARKINGS ONLY) POSITION DATA: RH COMPONENT MAINT MANUAL REF: 71-11-55 FOR NHA/OTHER SYS DET SEE: 71-11-04-05		RF
- 10	314T4085-10SP	FAN COWL-(PLACARDS AND MARKINGS ONLY) POSITION DATA: RH COMPONENT MAINT MANUAL REF: 71-11-55 FOR NHA/OTHER SYS DET SEE: 71-11-04-05		RF
- 10	314T4085-2SP	FAN COWL-(PLACARDS AND MARKINGS ONLY) POSITION DATA: RH COMPONENT MAINT MANUAL REF: 71-11-55 FOR NHA/OTHER SYS DET SEE: 71-11-04-05		RF
- 10	314T4085-14SP	FAN COWL-(PLACARDS AND MARKINGS ONLY) POSITION DATA: RH COMPONENT MAINT MANUAL REF: 71-11-55 FOR NHA/OTHER SYS DET SEE: 71-11-04-05		RF

ILLUSTRATION ITEMS NOT ON PARTS LIST ARE NOT APPLICABLE

- ITEM NOT ILLUSTRATED

BOEING PROPRIETARY - Copyright © - Unpublished Work - See title page for details.

FIG ITEM	PART NUMBER	1 2 3 4 5 6 7 NOMENCLATURE	EFFECT FROM TO	UNITS PER ASSY
5				
- 10	314T4085-12SP	FAN COWL-(PLACARDS AND MARKINGS ONLY) POSITION DATA: RH COMPONENT MAINT MANUAL REF: 71-11-55 FOR NHA/OTHER SYS DET SEE: 71-11-04-05		RF
- 10	314T4110-16SP	COWL ASSY-(PLACARDS AND MARKINGS ONLY) POSITION DATA: RH COMPONENT MAINT MANUAL REF: 71-11-53		RF
15	BAC27TTR0040	.MARKER-ALUMINUM FOIL		1

ILLUSTRATION ITEMS NOT ON PARTS LIST ARE NOT APPLICABLE

- ITEM NOT ILLUSTRATED

BOEING PROPRIETARY - Copyright © - Unpublished Work - See title page for details.

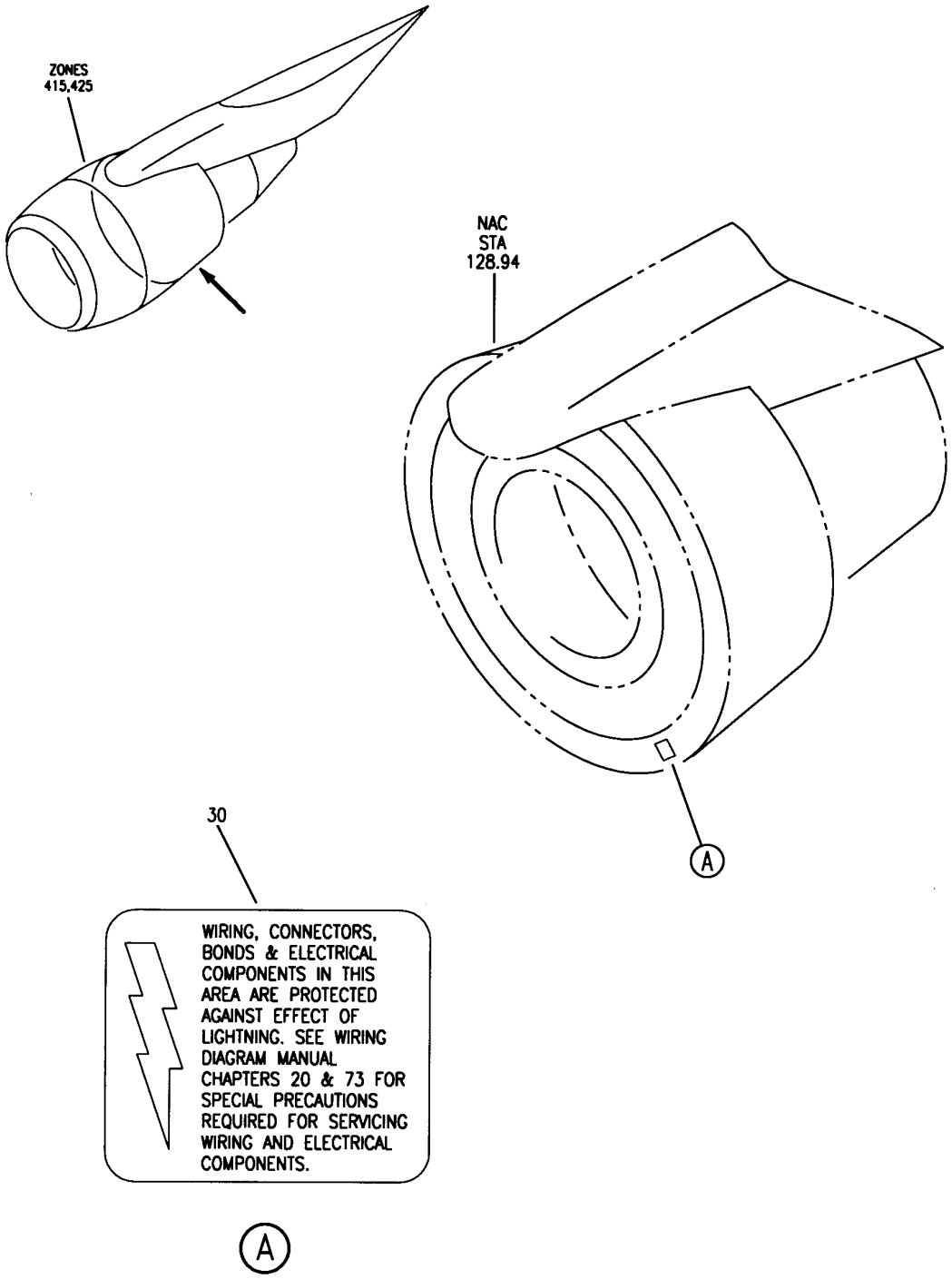

V 11250708 REV 195

COWL ASSY-FAN DUCT (PLACARDS AND MARKINGS ONLY)
FIGURE 8

BOEING PROPRIETARY - Copyright © - Unpublished Work - See title page for details.

FIG ITEM	PART NUMBER	1 2 3 4 5 6 7 NOMENCLATURE	EFFECT FROM TO	UNITS PER ASSY
8		COWL ASSY-FAN DUCT (PLACARDS AND MARKINGS ONLY)		
- 1	315T4014-123SP	COWL ASSY-FAN DUCT (PLACARDS AND MARKINGS ONLY) POSITION DATA: LH OUTBD COMPONENT MAINT MANUAL REF: 78-31-41 FOR NHA/OTHER SYS DET SEE: 78-31-01-03		RF
- 1	315T4014-167SP	COWL ASSY-FAN DUCT (PLACARDS AND MARKINGS ONLY) POSITION DATA: LH OUTBD COMPONENT MAINT MANUAL REF: 78-31-41 FOR NHA/OTHER SYS DET SEE: 78-31-01-03		RF
- 1	315T4014-131SP	COWL ASSY-FAN DUCT (PLACARDS AND MARKINGS ONLY) POSITION DATA: LH OUTBD COMPONENT MAINT MANUAL REF: 78-31-41 QUALIFIED I/W DATA: ONE-WAY FORWARD AFTER INCORPORATION OF SRVC BULLETIN 767-78-0062 POST SERVICE BULLETIN: 78-0062R5 FOR NHA/OTHER SYS DET SEE: 78-31-01-03		RF
- 6	315T4014-124SP	COWL ASSY-FAN DUCT (PLACARDS AND MARKINGS ONLY) POSITION DATA: LH INBD COMPONENT MAINT MANUAL REF: 78-31-41 FOR NHA/OTHER SYS DET SEE: 78-31-01-03		RF

ILLUSTRATION ITEMS NOT ON PARTS LIST ARE NOT APPLICABLE

- ITEM NOT ILLUSTRATED

BOEING PROPRIETARY - Copyright © - Unpublished Work - See title page for details.

FIG ITEM	PART NUMBER	1 2 3 4 5 6 7 NOMENCLATURE	EFFECT FROM TO	UNITS PER ASSY
8				
- 6	315T4014-168SP	COWL ASSY-FAN DUCT (PLACARDS AND MARKINGS ONLY) POSITION DATA: LH INBD COMPONENT MAINT MANUAL REF: 78-31-41 FOR NHA/OTHER SYS DET SEE: 78-31-01-03		RF
- 6	315T4014-132SP	COWL ASSY-FAN DUCT (PLACARDS AND MARKINGS ONLY) POSITION DATA: LH INBD COMPONENT MAINT MANUAL REF: 78-31-41 QUALIFIED I/W DATA: 315T4014-132SP CAN REPLACE, BUT NOT BE REPLACED BY 315T4014-66SP AFTER INCORPORATED S/B 767-78-0062 POST SERVICE BULLETIN: 78-0062R5 FOR NHA/OTHER SYS DET SEE: 78-31-01-03		RF
- 14	315T4014-134SP	COWL ASSY-FAN DUCT (PLACARDS AND MARKINGS ONLY) POSITION DATA: RH OUTBD COMPONENT MAINT MANUAL REF: 78-31-41 QUALIFIED I/W DATA: ONE-WAY FORWARD AFTER INCORPORATION OF SRVC BULLETIN 767-78-0062 POST SERVICE BULLETIN: 78-0062R5 FOR NHA/OTHER SYS DET SEE: 78-31-01-03		RF

ILLUSTRATION ITEMS NOT ON PARTS LIST ARE NOT APPLICABLE

- ITEM NOT ILLUSTRATED

BOEING PROPRIETARY - Copyright © - Unpublished Work - See title page for details.

FIG ITEM	PART NUMBER	1 2 3 4 5 6 7 NOMENCLATURE	EFFECT FROM TO	UNITS PER ASSY
8				
- 14	315T4014-126SP	COWL ASSY-FAN DUCT (PLACARDS AND MARKINGS ONLY) POSITION DATA: RH OUTBD COMPONENT MAINT MANUAL REF: 78-31-41 FOR NHA/OTHER SYS DET SEE: 78-31-01-03		RF
- 14	315T4014-170SP	COWL ASSY-FAN DUCT (PLACARDS AND MARKINGS ONLY) POSITION DATA: RH OUTBD COMPONENT MAINT MANUAL REF: 78-31-41 FOR NHA/OTHER SYS DET SEE: 78-31-01-03		RF
- 16	315T4014-133SP	COWL ASSY-FAN DUCT (PLACARDS AND MARKINGS ONLY) POSITION DATA: RH INBD COMPONENT MAINT MANUAL REF: 78-31-41 QUALIFIED I/W DATA: ONE-WAY FORWARD AFTER INCORPORATION OF SRVC BULLETIN 767-78-0062 POST SERVICE BULLETIN: 78-0062R5 FOR NHA/OTHER SYS DET SEE: 78-31-01-03		RF
- 16	315T4014-125SP	COWL ASSY-FAN DUCT (PLACARDS AND MARKINGS ONLY) POSITION DATA: RH INBD COMPONENT MAINT MANUAL REF: 78-31-41 FOR NHA/OTHER SYS DET SEE: 78-31-01-03		RF

ILLUSTRATION ITEMS NOT ON PARTS LIST ARE NOT APPLICABLE

- ITEM NOT ILLUSTRATED

BOEING PROPRIETARY - Copyright © - Unpublished Work - See title page for details.

FIG ITEM	PART NUMBER	1 2 3 4 5 6 7 NOMENCLATURE	EFFECT FROM TO	UNITS PER ASSY
8				
- 16	315T4014-169SP	COWL ASSY-FAN DUCT (PLACARDS AND MARKINGS ONLY) POSITION DATA: RH INBD COMPONENT MAINT MANUAL REF: 78-31-41 FOR NHA/OTHER SYS DET SEE: 78-31-01-03		RF
30	BAC27EPP0476	.MARKER-ALUMINUM FOIL		1

ILLUSTRATION ITEMS NOT ON PARTS LIST ARE NOT APPLICABLE

- ITEM NOT ILLUSTRATED

BOEING PROPRIETARY - Copyright © - Unpublished Work - See title page for details.

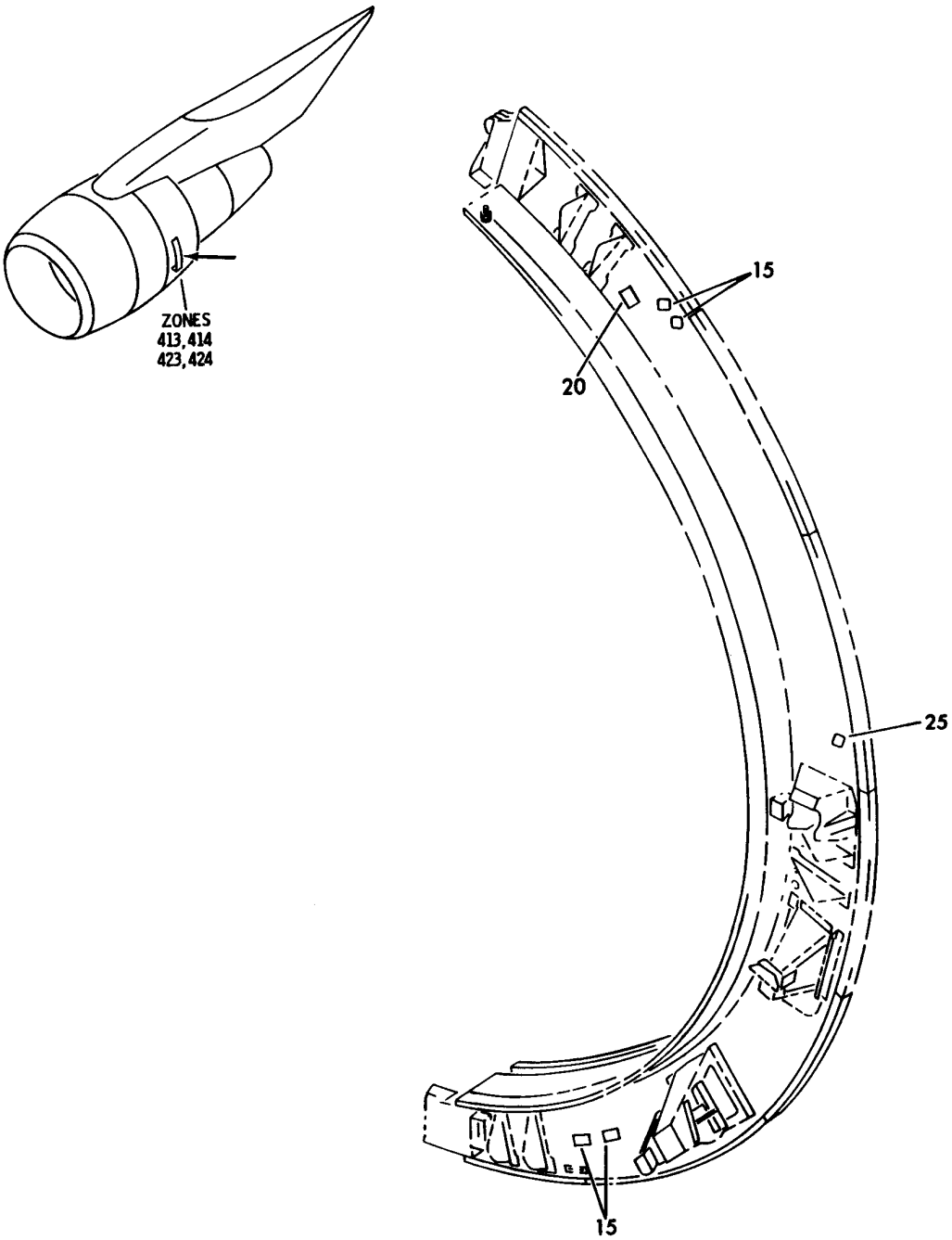

V 11250805 REV 138

COWL ASSY-FAN DUCT (PLACARDS AND MARKINGS ONLY)
FIGURE 5

BOEING PROPRIETARY - Copyright © - Unpublished Work - See title page for details.

FIG ITEM	PART NUMBER	1 2 3 4 5 6 7 NOMENCLATURE	EFFECT FROM TO	UNITS PER ASSY
5		COWL ASSY-FAN DUCT (PLACARDS AND MARKINGS ONLY)		
- 1	315T4013-79	COWL ASSY-FAN DUCT (PLACARDS AND MARKINGS ONLY) POSITION DATA: LH OUTBD COMPONENT MAINT MANUAL REF: 71-11-56 VARIABLE DRAWING REF: 315T4013-5031 315T4013-7009 FOR NHA/OTHER SYS DET SEE: 78-31-01-05		RF
- 1	315T4013-99	COWL ASSY-FAN DUCT (PLACARDS AND MARKINGS ONLY) POSITION DATA: LH OUTBD COMPONENT MAINT MANUAL REF: 71-11-56 VARIABLE DRAWING REF: 315T4013-5085 315T4013-7009 FOR NHA/OTHER SYS DET SEE: 78-31-01-05		RF
- 1	315T4013-107	COWL ASSY-FAN DUCT (PLACARDS AND MARKINGS ONLY) POSITION DATA: LH OUTBD COMPONENT MAINT MANUAL REF: 71-11-56 VARIABLE DRAWING REF: 315T4013-7009 FOR NHA/OTHER SYS DET SEE: 78-31-01-05		RF

ILLUSTRATION ITEMS NOT ON PARTS LIST ARE NOT APPLICABLE

- ITEM NOT ILLUSTRATED

BOEING PROPRIETARY - Copyright © - Unpublished Work - See title page for details.

FIG ITEM	PART NUMBER	1 2 3 4 5 6 7 NOMENCLATURE	EFFECT FROM TO	UNITS PER ASSY
5				
- 2	315T4013-80	COWL ASSY-FAN DUCT (PLACARDS AND MARKINGS ONLY) POSITION DATA: LH INBD COMPONENT MAINT MANUAL REF: 71-11-56 VARIABLE DRAWING REF: 315T4013-5032 315T4013-5036 315T4013-7010 FOR NHA/OTHER SYS DET SEE: 78-31-01-05		RF
- 2	315T4013-100	COWL ASSY-FAN DUCT (PLACARDS AND MARKINGS ONLY) POSITION DATA: LH INBD COMPONENT MAINT MANUAL REF: 71-11-56 VARIABLE DRAWING REF: 315T4013-7010 FOR NHA/OTHER SYS DET SEE: 78-31-01-05		RF
- 2	315T4013-108	COWL ASSY-FAN DUCT (PLACARDS AND MARKINGS ONLY) POSITION DATA: LH INBD COMPONENT MAINT MANUAL REF: 71-11-56 VARIABLE DRAWING REF: 315T4013-7010 FOR NHA/OTHER SYS DET SEE: 78-31-01-05		RF
- 2	315T4013-116	COWL ASSY-FAN DUCT (PLACARDS AND MARKINGS ONLY) POSITION DATA: LH INBD COMPONENT MAINT MANUAL REF: 71-11-56 FOR NHA/OTHER SYS DET SEE: 78-31-01-05		RF

ILLUSTRATION ITEMS NOT ON PARTS LIST ARE NOT APPLICABLE

- ITEM NOT ILLUSTRATED

BOEING PROPRIETARY - Copyright © - Unpublished Work - See title page for details.

FIG ITEM	PART NUMBER	1 2 3 4 5 6 7 NOMENCLATURE	EFFECT FROM TO	UNITS PER ASSY
5				
- 3	315T4013-81	COWL ASSY-FAN DUCT (PLACARDS AND MARKINGS ONLY) POSITION DATA: RH INBD COMPONENT MAINT MANUAL REF: 71-11-56 VARIABLE DRAWING REF: 315T4013-5031 315T4013-7009 FOR NHA/OTHER SYS DET SEE: 78-31-01-05		RF
- 3	315T4013-101	COWL ASSY-FAN DUCT (PLACARDS AND MARKINGS ONLY) POSITION DATA: RH INBD COMPONENT MAINT MANUAL REF: 71-11-56 VARIABLE DRAWING REF: 315T4013-7009 FOR NHA/OTHER SYS DET SEE: 78-31-01-05		RF
- 3	315T4013-109	COWL ASSY-FAN DUCT (PLACARDS AND MARKINGS ONLY) POSITION DATA: RH INBD COMPONENT MAINT MANUAL REF: 71-11-56 VARIABLE DRAWING REF: 315T4013-7009 FOR NHA/OTHER SYS DET SEE: 78-31-01-05		RF
- 4	315T4013-82	COWL ASSY-FAN DUCT (PLACARDS AND MARKINGS ONLY) POSITION DATA: RH INBD COMPONENT MAINT MANUAL REF: 71-11-56 VARIABLE DRAWING REF: 315T4013-5032 315T4013-5036 315T4013-7010 FOR NHA/OTHER SYS DET SEE: 78-31-01-05		RF

ILLUSTRATION ITEMS NOT ON PARTS LIST ARE NOT APPLICABLE

- ITEM NOT ILLUSTRATED

BOEING PROPRIETARY - Copyright © - Unpublished Work - See title page for details.

FIG ITEM	PART NUMBER	1 2 3 4 5 6 7 NOMENCLATURE	EFFECT FROM TO	UNITS PER ASSY
5				
- 4	315T4013-102	COWL ASSY-FAN DUCT (PLACARDS AND MARKINGS ONLY) POSITION DATA: RH INBD COMPONENT MAINT MANUAL REF: 71-11-56 VARIABLE DRAWING REF: 315T4013-5086 315T4013-7010 FOR NHA/OTHER SYS DET SEE: 78-31-01-05		RF
- 4	315T4013-110	COWL ASSY-FAN DUCT (PLACARDS AND MARKINGS ONLY) POSITION DATA: RH INBD COMPONENT MAINT MANUAL REF: 71-11-56 VARIABLE DRAWING REF: 315T4013-7010 FOR NHA/OTHER SYS DET SEE: 78-31-01-05		RF
15	BAC27TTR0025	.MARKER-ALUMINUM FOIL PLACARD CONTENT: GSE HOIST POINT		1
20	BAC27TTR0036	.MARKER-ALUMINUM FOIL- PLACARD CONTENT: CAUTION		1
25	BAC27TTR0042	.MARKER-ALUMINUM FOIL		1

ILLUSTRATION ITEMS NOT ON PARTS LIST ARE NOT APPLICABLE

- ITEM NOT ILLUSTRATED

BOEING PROPRIETARY - Copyright © - Unpublished Work - See title page for details.

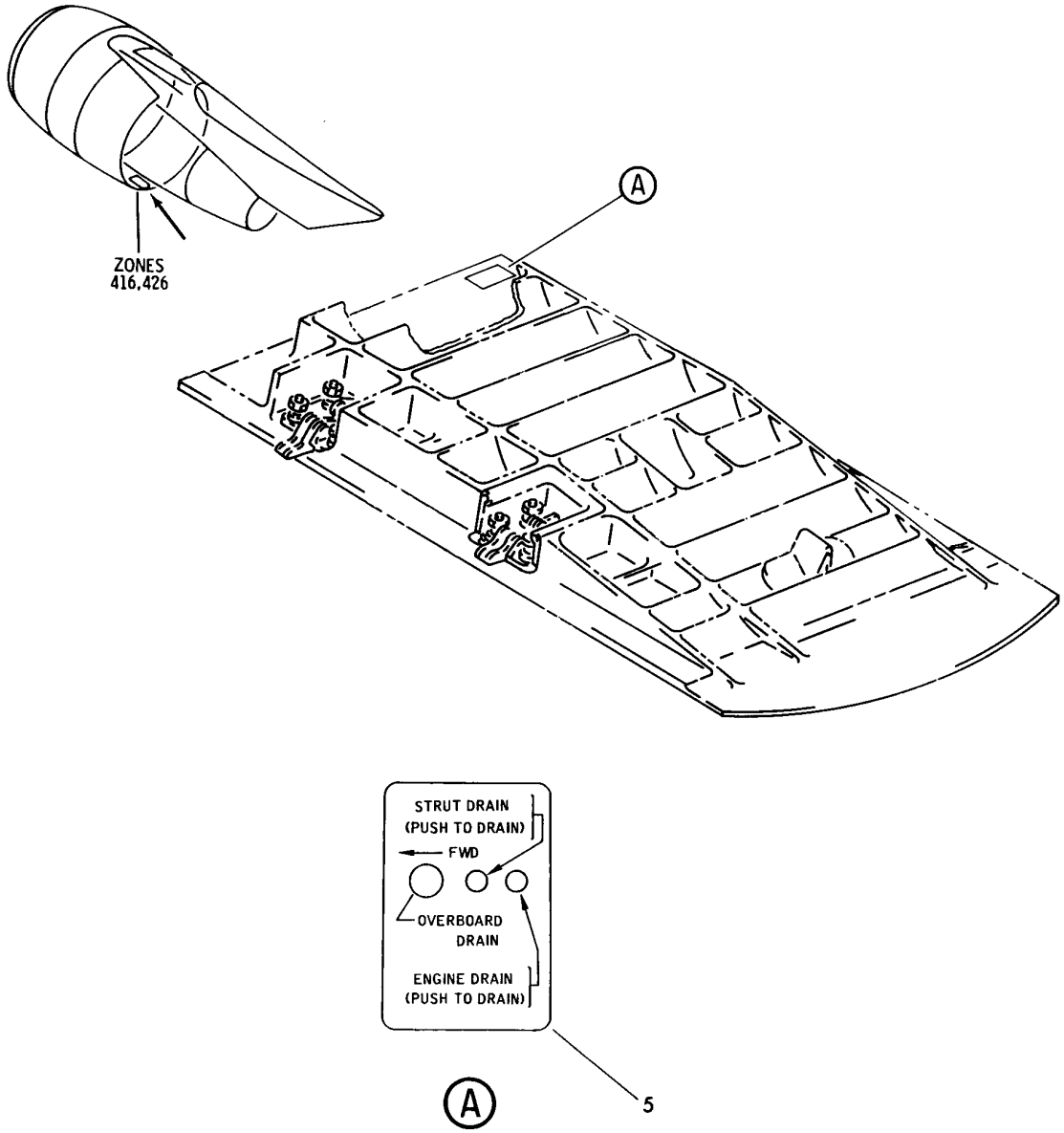

V 11250819 REV 110

DOOR ASSY-EXH (PLACARDS AND MARKINGS ONLY)
FIGURE 19

BOEING PROPRIETARY - Copyright © - Unpublished Work - See title page for details.

FIG ITEM	PART NUMBER	1 2 3 4 5 6 7 NOMENCLATURE	EFFECT FROM TO	UNITS PER ASSY
19				
		DOOR ASSY-EXH (PLACARDS AND MARKINGS ONLY)		
- 1	315T3416-36	DOOR ASSY-EXH (PLACARDS AND MARKINGS ONLY) FOR NHA/OTHER SYS DET SEE: 78-31-01-12		RF
- 1	315T3416-42	DOOR ASSY-EXH (PLACARDS AND MARKINGS ONLY)		RF
5	BAC27EPPS10048	.MARKER-ALUMINUM FOIL		1

ILLUSTRATION ITEMS NOT ON PARTS LIST ARE NOT APPLICABLE

- ITEM NOT ILLUSTRATED

BOEING PROPRIETARY - Copyright © - Unpublished Work - See title page for details.

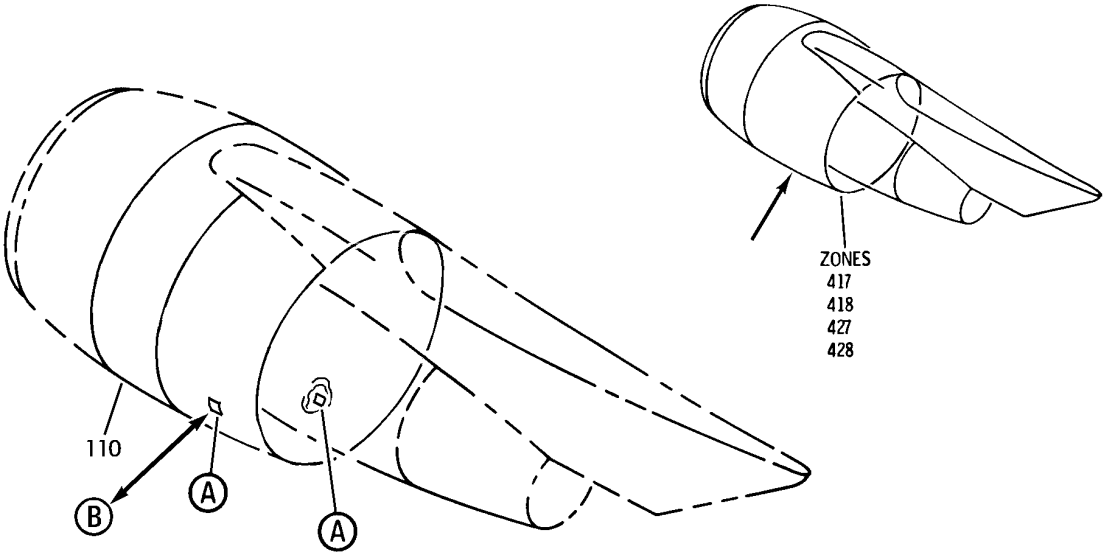

15

WARNING

DO NOT STAND BETWEEN CORE COWL AND ENGINE UNLESS CORE COWL IS SUPPORTED BY HOLD OPEN ROD. AN EXPOSED RED BAND WITH THE WORD "UNLOCKED" ON HOLD OPEN ROD INDICATES THE ROD IS NOT LOCKED. THE ROD MUST BE FULLY EXTENDED AND THE RED BAND MUST BE COVERED FOR ROD TO BE LOCKED. SERIOUS INJURY MAY RESULT FROM FALLING CORE PANEL IF ROD IS NOT INSTALLED AND LOCKED

A

115
125

WARNING

DO NOT STAND BETWEEN COWLS AND ENGINE UNLESS COWLS ARE SUPPORTED BY EXTENDED AND LOCKED HOLD-OPEN RODS. SERIOUS INJURY MAY RESULT FROM FALLING COWL PANEL IF ROD IS NOT INSTALLED AND LOCKED.

B

V 11250905 REV 243

COWL ASSY-CORE (PLACARDS AND MARKINGS ONLY)
FIGURE 5

BOEING PROPRIETARY - Copyright © - Unpublished Work - See title page for details.

FIG ITEM	PART NUMBER	1 2 3 4 5 6 7 NOMENCLATURE	EFFECT FROM TO	UNITS PER ASSY
5		COWL ASSY-CORE (PLACARDS AND MARKINGS ONLY)		
- 5	314T4210-43	COWL ASSY-CORE (PLACARDS AND MARKINGS ONLY) POSITION DATA: LH COMPONENT MAINT MANUAL REF: 71-11-59 REWORK DRAWING REF: 310T4080-5004 310T4080-5005 POST SERVICE BULLETIN: 74-0051 FOR NHA/OTHER SYS DET SEE: 71-11-06-05		RF
- 5	314T4210-59	COWL ASSY-CORE (PLACARDS AND MARKINGS ONLY) POSITION DATA: LH COMPONENT MAINT MANUAL REF: 71-11-59 FOR NHA/OTHER SYS DET SEE: 71-11-06-05		RF
- 5	314T4210-77	COWL ASSY-CORE (PLACARDS AND MARKINGS ONLY) POSITION DATA: LH COMPONENT MAINT MANUAL REF: 71-11-59 FOR NHA/OTHER SYS DET SEE: 71-11-06-05		RF
- 5	314T4210-65	COWL ASSY-CORE (PLACARDS AND MARKINGS ONLY) POSITION DATA: LH COMPONENT MAINT MANUAL REF: 71-11-59 REWORK DRAWING REF: 310T4080-5012 FOR NHA/OTHER SYS DET SEE: 71-11-06-05		RF
- 5	314T4090-1	CORE COWL-CORE (PLACARDS AND MARKINGS ONLY) POSITION DATA: LH FOR NHA/OTHER SYS DET SEE: 71-11-06-05		RF

ILLUSTRATION ITEMS NOT ON PARTS LIST ARE NOT APPLICABLE

- ITEM NOT ILLUSTRATED

BOEING PROPRIETARY - Copyright © - Unpublished Work - See title page for details.

FIG ITEM	PART NUMBER	1 2 3 4 5 6 7 NOMENCLATURE	EFFECT FROM TO	UNITS PER ASSY
5				
- 10	314T4210-60	COWL ASSY-CORE (PLACARDS AND MARKINGS ONLY) POSITION DATA: RH COMPONENT MAINT MANUAL REF: 71-11-59 FOR NHA/OTHER SYS DET SEE: 71-11-06-05		RF
- 10	314T4210-78	COWL ASSY-CORE (PLACARDS AND MARKINGS ONLY) POSITION DATA: RH COMPONENT MAINT MANUAL REF: 71-11-59 FOR NHA/OTHER SYS DET SEE: 71-11-06-05		RF
- 10	314T4210-66	COWL ASSY-CORE (PLACARDS AND MARKINGS ONLY) POSITION DATA: RH COMPONENT MAINT MANUAL REF: 71-11-59 REWORK DRAWING REF: 310T4080-5012 FOR NHA/OTHER SYS DET SEE: 71-11-06-05		RF
15	BAC27TTR0041	.NAMEPLATE- OPTIONAL PART: BAC27TTR73 USED ON: 314T4210-35 314T4210-59 314T4210-77 314T4210-2 314T4210-60 314T4210-78		1

ILLUSTRATION ITEMS NOT ON PARTS LIST ARE NOT APPLICABLE

- ITEM NOT ILLUSTRATED

BOEING PROPRIETARY - Copyright © - Unpublished Work - See title page for details.

FIG ITEM	PART NUMBER	1 2 3 4 5 6 7 NOMENCLATURE	EFFECT FROM TO	UNITS PER ASSY
5				
15	BAC27TTR73	.MARKER-ALUMINUM FOIL		1
		OPTIONAL PART:		
		BAC27TTR0041		
		USED ON:		
		314T4210-2		
		314T4210-35		
		314T4210-59		
		314T4210-60		
		314T4210-77		
		314T4210-78		
		314T4210-113		
		314T4210-114		
		314T4210-115		
		314T4210-116		
		314T4210-201		
		314T4210-202		
		314T4210-205		
		314T4210-206		
		314T4210-138		
		314T4210-140		
		MODREF61233		
		MODREF61235		
		MODREF282277		
		MODREF282279		
		MODREF336032		
		MODREF336034		
		ATTACHING PARTS		
- 20	BACR15BA3AD	.RIVET-		4
		SIZE DETERMINED ON INSTL.		
		-------*-------		

ILLUSTRATION ITEMS NOT ON PARTS LIST ARE NOT APPLICABLE

- ITEM NOT ILLUSTRATED

BOEING PROPRIETARY - Copyright © - Unpublished Work - See title page for details.

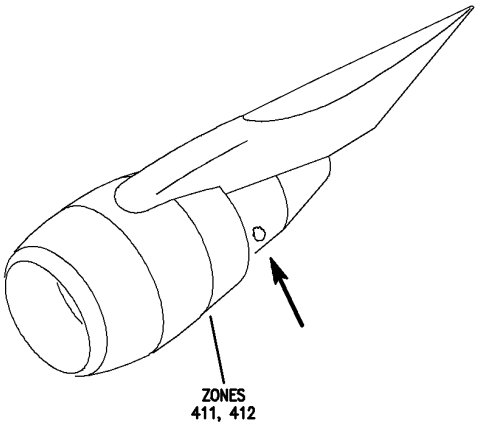

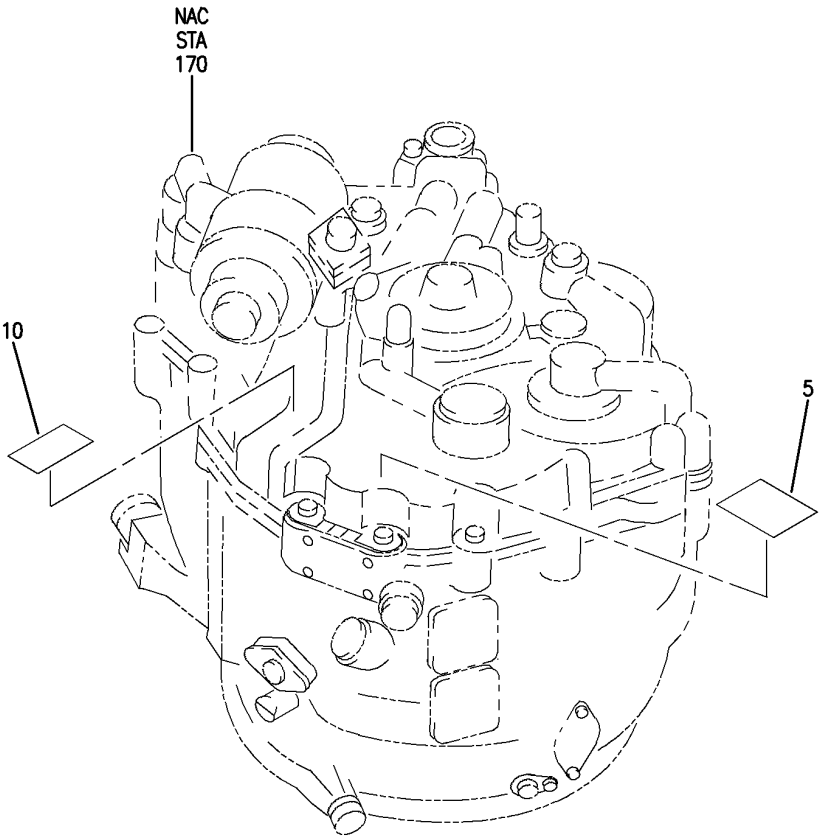

V 11251203 REV 233

GENERATOR ASSY-INTEGRATED DRIVE (PLACARDS AND MARKINGS ONLY)
FIGURE 3

BOEING PROPRIETARY - Copyright © - Unpublished Work - See title page for details.

FIG ITEM	PART NUMBER	1 2 3 4 5 6 7 NOMENCLATURE	EFFECT FROM TO	UNITS PER ASSY
3		GENERATOR ASSY-INTEGRATED DRIVE (PLACARDS AND MARKINGS ONLY)		
- 1	755359	GENERATOR ASSY-INTEGRATED DRIVE (PLACARDS AND MARKINGS ONLY) SUPPLIER CODE: V99167 SPECIFICATION NUMBER: 60B40161-20 COMPONENT MAINT MANUAL REF: 24-11-76 FOR NHA/OTHER SYS DET SEE: 24-11-01-02		RF
- 1	745329	GENERATOR ASSY-INTEGRATED DRIVE (PLACARDS AND MARKINGS ONLY) SUPPLIER CODE: V99167 SPECIFICATION NUMBER: 60B40161-5 COMPONENT MAINT MANUAL REF: 24-11-76 OPTIONAL PART: 745329A V99167 FOR NHA/OTHER SYS DET SEE: 24-11-01-02		RF
- 1	745329A	GENERATOR ASSY-INTEGRATED DRIVE (PLACARDS AND MARKINGS ONLY) SUPPLIER CODE: V99167 SPECIFICATION NUMBER: 60B40161-5 COMPONENT MAINT MANUAL REF: 24-11-76 OPTIONAL PART: 745329 V99167 FOR NHA/OTHER SYS DET SEE: 24-11-01-02		RF

ILLUSTRATION ITEMS NOT ON PARTS LIST ARE NOT APPLICABLE

- ITEM NOT ILLUSTRATED

BOEING PROPRIETARY - Copyright © - Unpublished Work - See title page for details.

FIG ITEM	PART NUMBER	1 2 3 4 5 6 7 NOMENCLATURE	EFFECT FROM TO	UNITS PER ASSY
3				
- 1	755359A	GENERATOR ASSY-INTEGRATED DRIVE (PLACARDS AND MARKINGS ONLY) SUPPLIER CODE: V99167 SPECIFICATION NUMBER: 60B40161-24 COMPONENT MAINT MANUAL REF: 24-11-76 OPTIONAL PART: 755359B V99167 FOR NHA/OTHER SYS DET SEE: 24-11-01-02		RF
- 1	745329C	GENERATOR ASSY-INTEGRATED DRIVE (PLACARDS AND MARKINGS ONLY) SUPPLIER CODE: V99167 SPECIFICATION NUMBER: 60B40161-22 COMPONENT MAINT MANUAL REF: 24-11-76 OPTIONAL PART: 745329D V99167 FOR NHA/OTHER SYS DET SEE: 24-11-01-02		RF
- 1	755359C	GENERATOR ASSY-INTEGRATED DRIVE (PLACARDS AND MARKINGS ONLY) SUPPLIER CODE: V99167 SPECIFICATION NUMBER: 60B40161-28 COMPONENT MAINT MANUAL REF: 24-11-76 FOR NHA/OTHER SYS DET SEE: 24-11-01-02		RF

ILLUSTRATION ITEMS NOT ON PARTS LIST ARE NOT APPLICABLE

- ITEM NOT ILLUSTRATED

BOEING PROPRIETARY - Copyright © - Unpublished Work - See title page for details.

FIG ITEM	PART NUMBER	1 2 3 4 5 6 7 NOMENCLATURE	EFFECT FROM TO	UNITS PER ASSY
3				
- 1	745329E	GENERATOR ASSY-INTEGRATED DRIVE (PLACARDS AND MARKINGS ONLY) SUPPLIER CODE: V99167 SPECIFICATION NUMBER: 60B40161-26 COMPONENT MAINT MANUAL REF: 24-11-76 FOR NHA/OTHER SYS DET SEE: 24-11-01-02		RF
- 1	755359B	GENERATOR ASSY-INTEGRATED DRIVE (PLACARDS AND MARKINGS ONLY) SUPPLIER CODE: V99167 SPECIFICATION NUMBER: 60B40161-24 COMPONENT MAINT MANUAL REF: 24-11-76 OPTIONAL PART: 755359A V99167 FOR NHA/OTHER SYS DET SEE: 24-11-01-02		RF
- 1	745329D	GENERATOR ASSY-INTEGRATED DRIVE (PLACARDS AND MARKINGS ONLY) SUPPLIER CODE: V99167 SPECIFICATION NUMBER: 60B40161-22 COMPONENT MAINT MANUAL REF: 24-11-76 OPTIONAL PART: 745329C V99167 FOR NHA/OTHER SYS DET SEE: 24-11-01-02		RF

ILLUSTRATION ITEMS NOT ON PARTS LIST ARE NOT APPLICABLE

- ITEM NOT ILLUSTRATED

BOEING PROPRIETARY - Copyright © - Unpublished Work - See title page for details.

FIG ITEM	PART NUMBER	1 2 3 4 5 6 7 NOMENCLATURE	EFFECT FROM TO	UNITS PER ASSY
3				
- 1	745329F	GENERATOR ASSY-INTEGRATED DRIVE (PLACARDS AND MARKINGS ONLY) SUPPLIER CODE: V99167 SPECIFICATION NUMBER: 60B40161-30 COMPONENT MAINT MANUAL REF: 24-11-76 FOR NHA/OTHER SYS DET SEE: 24-11-01-02		RF
- 1	755359D	GENERATOR ASSY-INTEGRATED DRIVE (PLACARDS AND MARKINGS ONLY) SUPPLIER CODE: V99167 SPECIFICATION NUMBER: 60B40161-32 COMPONENT MAINT MANUAL REF: 24-11-76 FOR NHA/OTHER SYS DET SEE: 24-11-01-02		RF
- 1	745329B	GENERATOR ASSY-INTEGRATED DRIVE (PLACARDS AND MARKINGS ONLY) SUPPLIER CODE: V99167 SPECIFICATION NUMBER: 60B40161-18 COMPONENT MAINT MANUAL REF: 24-11-76 FOR NHA/OTHER SYS DET SEE: 24-11-01-02		RF
5	5907275	.DECAL-SERVICING INSTRUCTIONS SUPPLIER CODE: V99167		1
10	5907276	.DECAL-OK PRISM SUPPLIER CODE: V99167		1

ILLUSTRATION ITEMS NOT ON PARTS LIST ARE NOT APPLICABLE

- ITEM NOT ILLUSTRATED

BOEING PROPRIETARY - Copyright © - Unpublished Work - See title page for details.

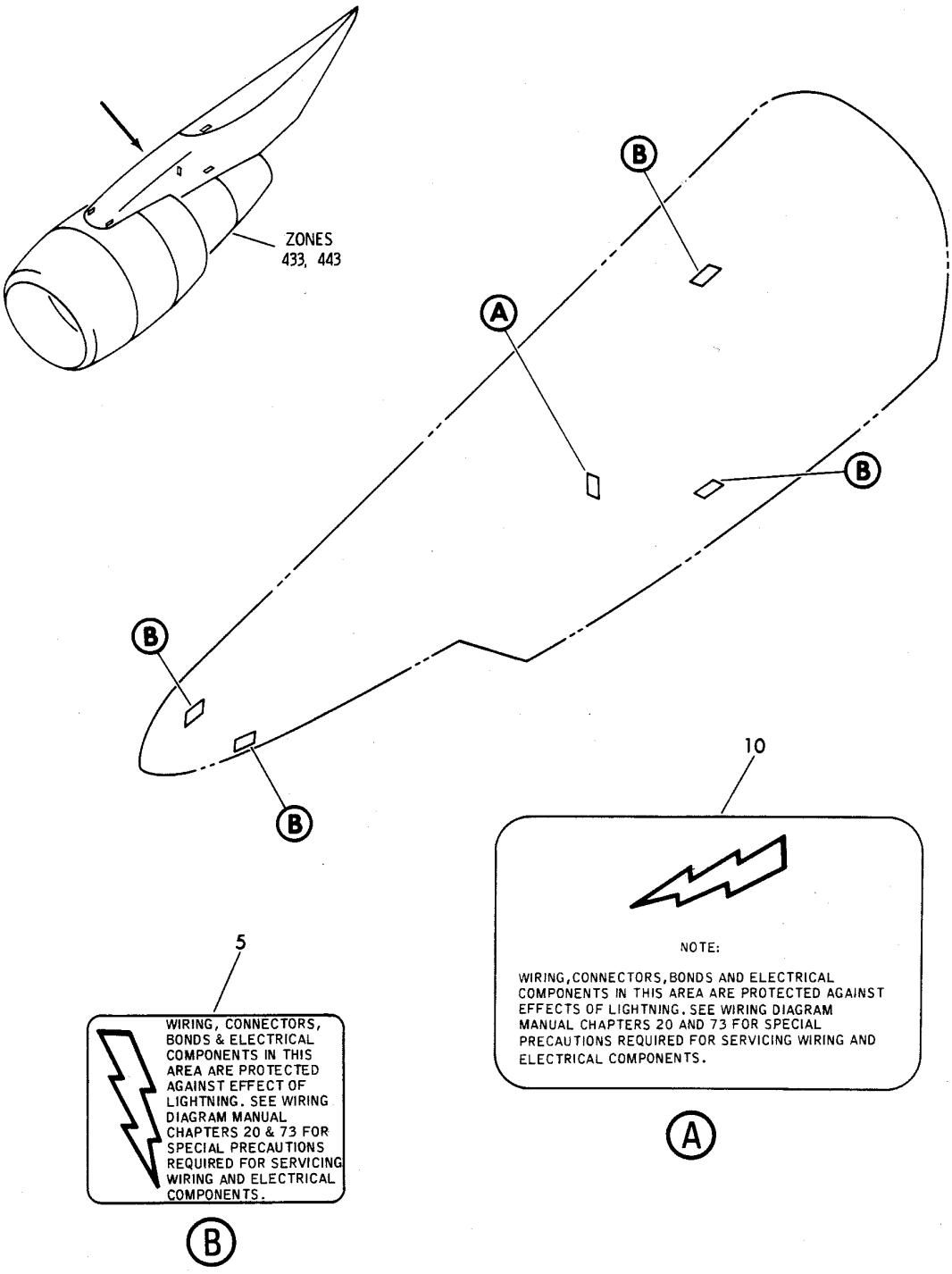

V 11251501 SHT 1 REV 093

DECAL INSTL-LIGHTNING STRIKE WARNING
FIGURE 1

BOEING PROPRIETARY - Copyright © - Unpublished Work - See title page for details.

FIG ITEM	PART NUMBER	1 2 3 4 5 6 7 NOMENCLATURE	EFFECT FROM TO	UNITS PER ASSY
1				
		DECAL INSTL-LIGHTNING STRIKE WARNING		
- 1	312T4230-1	DECAL INSTL-LIGHTNING STRIKE WARNING		RF
		FOR NHA SEE: 54-00-51-02		
5	BAC27EPP0476	.MARKER-ALUMINUM FOIL-		4
10	BAC27NEL1122	.MARKER-ALUMINUM FOIL		1

ILLUSTRATION ITEMS NOT ON PARTS LIST ARE NOT APPLICABLE

- ITEM NOT ILLUSTRATED

BOEING PROPRIETARY - Copyright © - Unpublished Work - See title page for details.

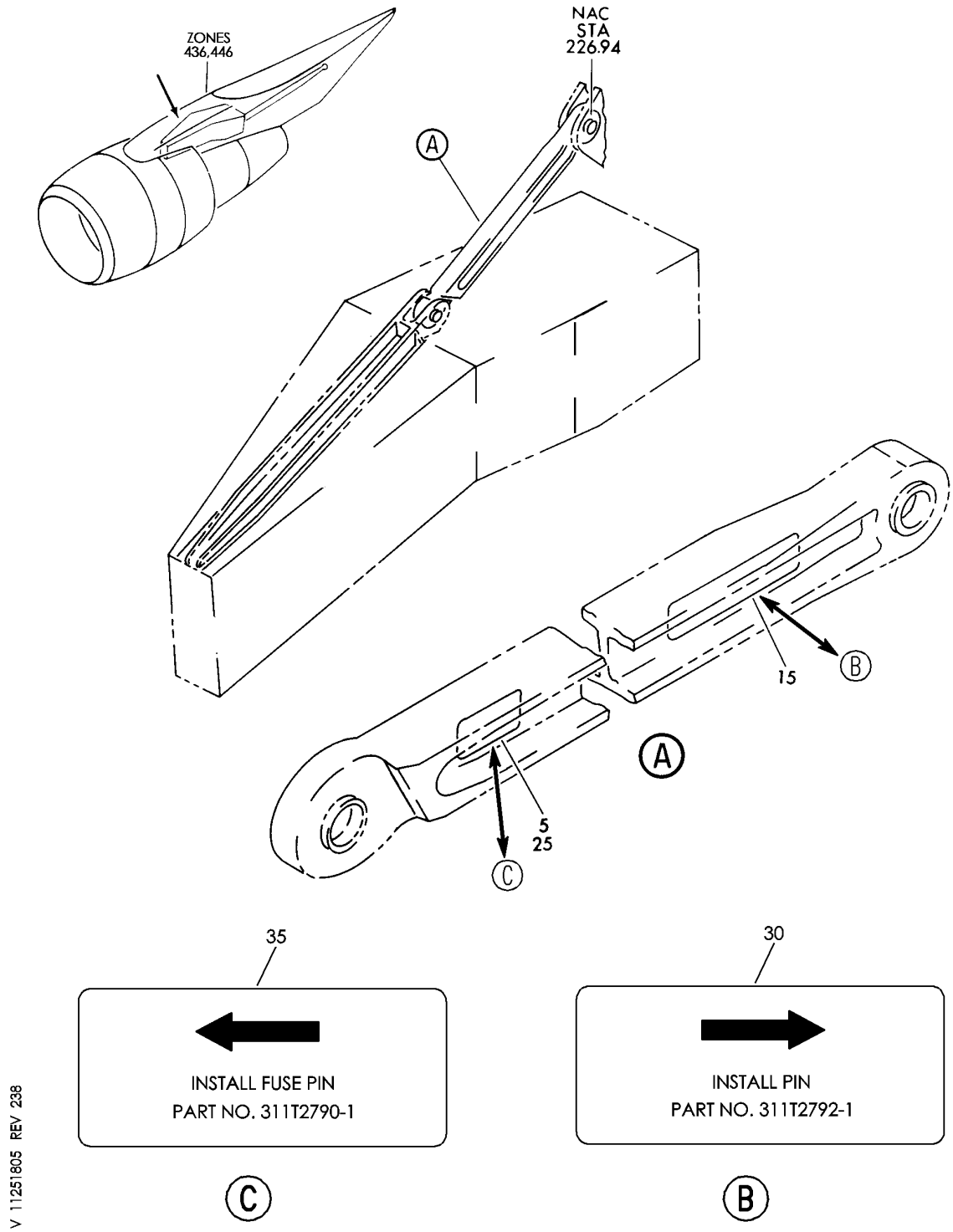

LINK ASSY-NACELLE STRUT (PLACARDS AND MARKINGS ONLY)
FIGURE 5

BOEING PROPRIETARY - Copyright © - Unpublished Work - See title page for details.

FIG ITEM	PART NUMBER	1 2 3 4 5 6 7 NOMENCLATURE	EFFECT FROM TO	UNITS PER ASSY
5		LINK ASSY-NACELLE STRUT (PLACARDS AND MARKINGS ONLY)		
- 1	311T4710-5	LINK ASSY-NACELLE STRUT (PLACARDS AND MARKINGS ONLY) COMPONENT MAINT MANUAL REF: 54-50-21 POST SERVICE BULLETIN: 54-0080 54-0088R1 FOR NHA/OTHER SYS DET SEE: 54-51-62-02		RF
5	BAC27TPP0343	.MARKER-ALUMINUM FOIL (INSTALL PIN PART NO. 311T2090-1 FOR CF6-80C,PW4000. PART NO. 311T3090-3 FOR CF6-80A, JT9D)		1
15	BAC27TPP0002	.MARKER-ALUMINUM FOIL (INSTALL PIN PART NO. 311T3092-1)		1
30	BAC27TPP674	.MARKER-ALUMINUM FOIL POST SERVICE BULLETIN: 54-0088R1		1
35	BAC27TPP673	.MARKER-ALUMINUM FOIL POST SERVICE BULLETIN: 54-0088R1		1

ILLUSTRATION ITEMS NOT ON PARTS LIST ARE NOT APPLICABLE

- ITEM NOT ILLUSTRATED

BOEING PROPRIETARY - Copyright © - Unpublished Work - See title page for details.

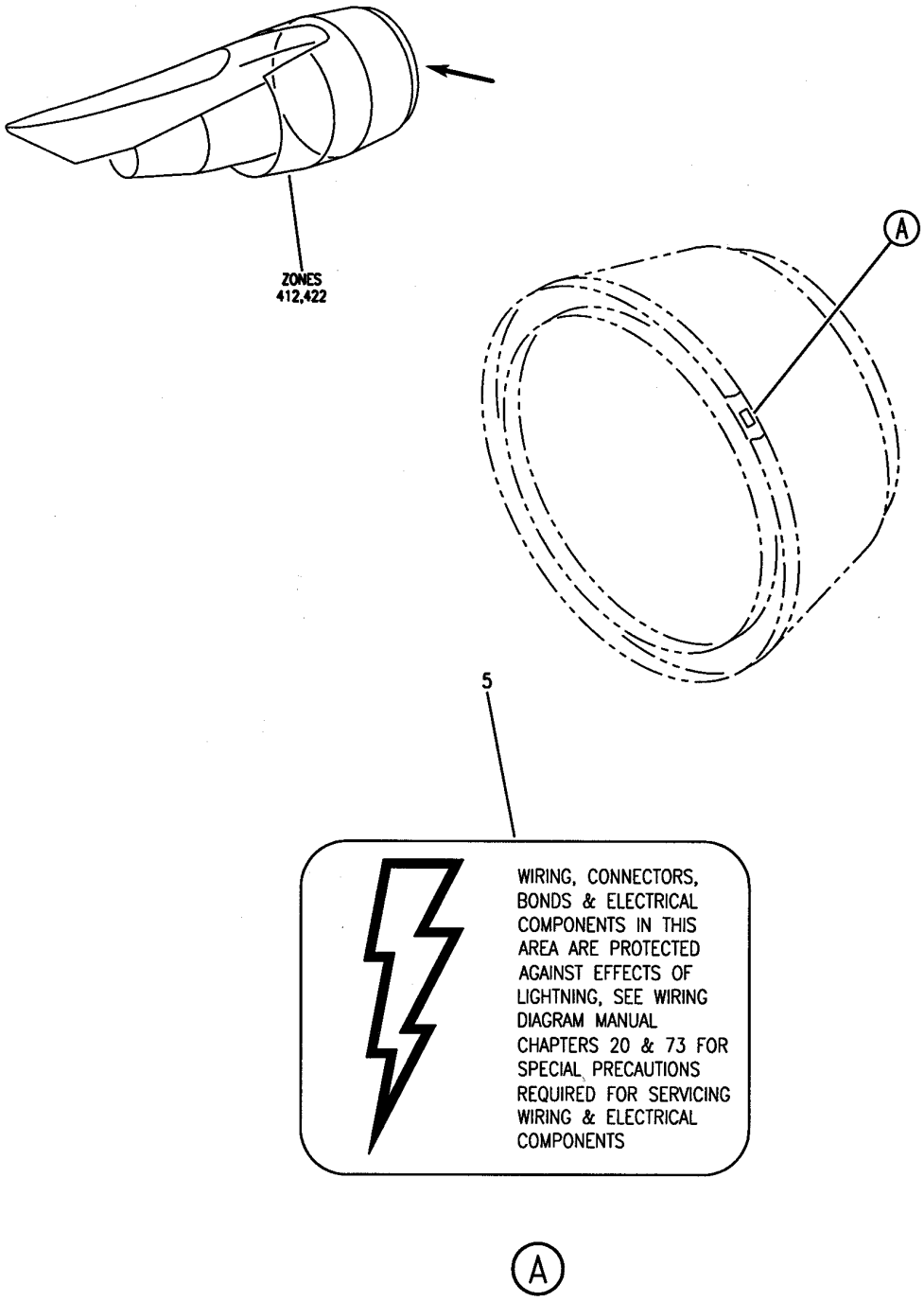

V 11255102 REV 223

INLET ASSY-PW4000 ENG (PLACARDS AND MARKINGS ONLY)
FIGURE 2

BOEING PROPRIETARY - Copyright © - Unpublished Work - See title page for details.

	FIG ITEM	PART NUMBER	1 2 3 4 5 6 7 NOMENCLATURE	EFFECT FROM TO	UNITS PER ASSY
	2		INLET ASSY-PW4000 ENG (PLACARDS AND MARKINGS ONLY)		
	- 1	314T4010-6SP	INLET ASSY-PW4000 ENG (PLACARDS AND MARKINGS ONLY) POSITION DATA: POSITION 1 AND 2 COMPONENT MAINT MANUAL REF: 71-11-51 FOR NHA/OTHER SYS DET SEE: 71-11-01-10		RF
	- 1	314T4010-10SP	INLET ASSY-PW4000 ENG (PLACARDS AND MARKINGS ONLY) POSITION DATA: POSITION 1 AND 2 COMPONENT MAINT MANUAL REF: 71-11-51 FOR NHA/OTHER SYS DET SEE: 71-11-01-10		RF
R	- 1	314T4010-12SP	INLET ASSY-PW4000 ENG (PLACARDS AND MARKINGS ONLY) POSITION DATA: POSITION 1 AND 2 COMPONENT MAINT MANUAL REF: 71-11-51 FOR NHA/OTHER SYS DET SEE: 71-11-01-10		RF
R	5	BAC27EPP0476	.MARKER-ALUMINUM FOIL		1

ILLUSTRATION ITEMS NOT ON PARTS LIST ARE NOT APPLICABLE

- ITEM NOT ILLUSTRATED

BOEING PROPRIETARY - Copyright © - Unpublished Work - See title page for details.