STANDBY MAGNETIC COMPASS

BOEING PROPRIETARY - Copyright © - Unpublished Work - See title page for details.

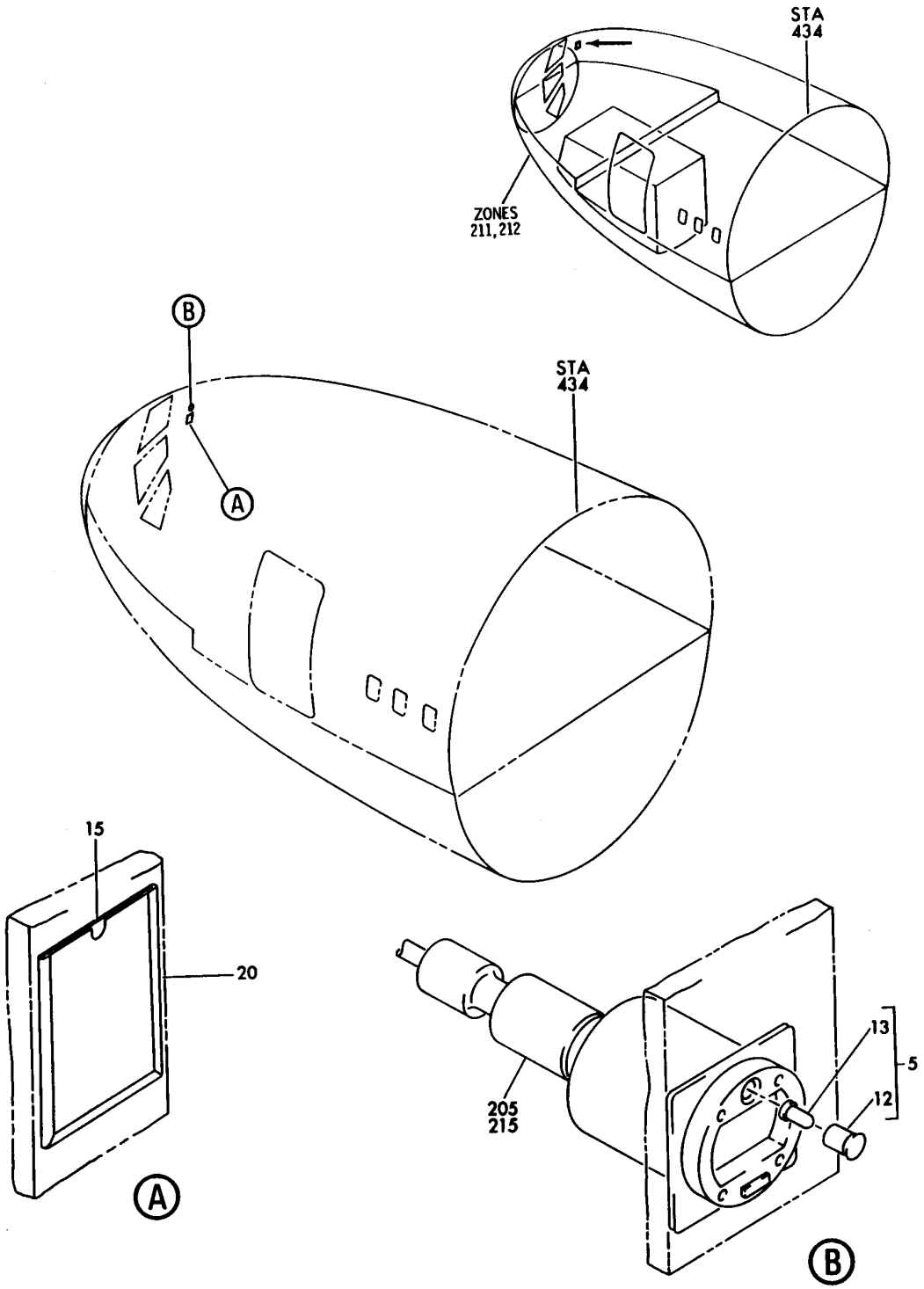

PANEL INSTL-PILOTS MAIN (STANDBY MAGNETIC COMPASS ONLY)
FIGURE 1

BOEING PROPRIETARY - Copyright © - Unpublished Work - See title page for details.

FIG ITEM	PART NUMBER	1 2 3 4 5 6 7 NOMENCLATURE	EFFECT FROM TO	UNITS PER ASSY
1		PANEL INSTL-PILOTS MAIN (STANDBY MAGNETIC COMPASS ONLY)		
- 1	233T2100-1	PANEL INSTL-PILOTS MAIN (STANDBY MAGNETIC COMPASS ONLY)		RF
		VARIABLE DRAWING REF: 233T2100-5048		
		FOR NHA/OTHER SYS DET SEE: 25-10-00-03		
5	C5H	.COMPASS ASSY-STBY MAGNETIC		1
		SUPPLIER CODE: V61349		
		FUNCTIONAL DESCRIPTION: PROVIDES INDEPENDENT SOURCE OF DIRECTIONAL HEADING		
		ELECTRICAL EQUIP NUMBER: N00099		
		COMPONENT MAINT MANUAL REF: 34-23-01		
5	C5M	.COMPASS ASSY-STBY MAGNETIC		1
		SUPPLIER CODE: V61349		
		FUNCTIONAL DESCRIPTION: PROVIDES INDEPENDENT SOURCE OF DIRECTIONAL HEADING		
		ELECTRICAL EQUIP NUMBER: N00099		
		COMPONENT MAINT MANUAL REF: 34-25-01		
		ATTACHING PARTS		
- 10	MS35214-43	.SCREW		4
		-------*-------		
12	AF961	..LAMPHOLDER ASSY-		1
		SUPPLIER CODE: V61349		
13	MS25237-328	..LAMP-		1
		OPTIONAL PART: A0-513C V61349		
13	A0-513C	..LAMP-		1
		SUPPLIER CODE: V61349		
		OPTIONAL PART: MS25237-328		
15	AN5823-1	.CARD		1

ILLUSTRATION ITEMS NOT ON PARTS LIST ARE NOT APPLICABLE

- ITEM NOT ILLUSTRATED

BOEING PROPRIETARY - Copyright © - Unpublished Work - See title page for details.

FIG ITEM	PART NUMBER	1 2 3 4 5 6 7 NOMENCLATURE	EFFECT FROM TO	UNITS PER ASSY
1				
20	233T2100-2	.HOLDER-CARD QUALIFIED I/W DATA: P/N 233T2100-2 CAN REPLACE AND BE REPLACED BY P/N 233U3340-3 (2-WAY INTERCHANGEABILITY). THE 233T2100-2 IS BEING MOUNTED ON WITH MS24693BB26 SCREWS AND 233U3340-3 IS BEING BONDED ON PER BAC5010 TYPE 40. THERE IS 2-WAY INTERCHANGEABILITY TO THE STRUCTURE HOLES FOR THE MS24693BB26 AND BONDING AS LONG AS THE BOND CAN BE REMOVED FOR MODELS 757 AND 767 ONLY. OPTIONAL PART: 233U3340-3		1
20	233U3340-3	.HOLDER-CARD QUALIFIED I/W DATA: P/N 233T2100-2 CAN REPLACE AND BE REPLACED BY P/N 233U3340-3 (2-WAY INTERCHANGEABILITY). THE 233T2100-2 IS BEING MOUNTED ON WITH MS24693BB26 SCREWS AND 233U3340-3 IS BEING BONDED ON PER BAC5010 TYPE 40. THERE IS 2-WAY INTERCHANGEABILITY TO THE STRUCTURE HOLES FOR THE MS24693BB26 AND BONDING AS LONG AS THE BOND CAN BE REMOVED FOR MODELS 757 AND 767 ONLY. OPTIONAL PART: 233T2100-2		1
		ATTACHING PARTS		
- 25	MS24693BB26	.SCREW-		2
		-------*-------		
- 210	286T0636-101	WIRE BUNDLE ASSY		RF

ILLUSTRATION ITEMS NOT ON PARTS LIST ARE NOT APPLICABLE

- ITEM NOT ILLUSTRATED

BOEING PROPRIETARY - Copyright © - Unpublished Work - See title page for details.

FIG ITEM	PART NUMBER	1 2 3 4 5 6 7 NOMENCLATURE	EFFECT FROM TO	UNITS PER ASSY
1				
215	CA270-8	.PLUG- SUPPLIER CODE: V71468 ELECTRICAL EQUIP NUMBER: D00642 WIRING DIAGRAM REF: 331311		1

ILLUSTRATION ITEMS NOT ON PARTS LIST ARE NOT APPLICABLE

– ITEM NOT ILLUSTRATED

BOEING PROPRIETARY - Copyright © - Unpublished Work - See title page for details.