Scandinavian Airlines System

PAGE	DATE	CODE
CHAPTER 28 TAB		
FUEL		
EFFECTIVE PAGES SEE LAST PAGE OF LIST FOR NUMBER OF PAGES		
28-CONTENTS		
1	AUG 22/01	SAS
2	APR 22/07	SAS
3	DEC 22/05	SAS
4	AUG 22/07	SAS
5	APR 22/09	SAS
6	APR 22/09	SAS
7	APR 22/07	SAS
R 8	AUG 22/09	SAS.1
R 9	AUG 22/09	SAS.1
R 10	AUG 22/09	SAS.1
R 11	AUG 22/09	SAS.1
R 12	AUG 22/09	SAS.1
13	AUG 22/07	SAS
14	DEC 22/07	SAS
R 15	AUG 22/09	SAS.1
16	AUG 22/07	SAS
17	AUG 22/07	SAS
18	BLANK	
28-00-00		
1	DEC 22/01	01
2	APR 22/04	26
3	APR 22/04	15
4	DEC 22/01	02
5	APR 22/00	09
6	BLANK	
28-00-00		
201	DEC 22/05	02
202	APR 22/07	02
203	DEC 22/05	02
204	AUG 22/07	02
205	DEC 22/05	02
206	DEC 22/05	02
R 207	AUG 22/09	02.1
R 208	AUG 22/09	01.1
R 209	AUG 22/09	01.1
210	BLANK	
28-00-00		
901	AUG 22/05	01
902	AUG 10/98	01
903	AUG 10/98	01
904	DEC 10/98	01
905	DEC 10/98	01
906	AUG 10/98	01
907	AUG 22/05	01
908	AUG 22/05	01
28-00-00		CONT.
909	AUG 22/05	01
910	AUG 22/05	01
911	AUG 22/05	01
912	AUG 22/05	01
913	AUG 22/05	01
914	AUG 22/05	01
915	AUG 22/05	01
916	AUG 22/05	01
917	AUG 22/05	01
918	AUG 22/05	01
919	AUG 22/05	01
920	AUG 22/05	01
921	AUG 22/05	01
922	AUG 22/05	01
923	AUG 22/05	01
924	AUG 22/05	01
925	AUG 22/05	01
926	AUG 22/05	01
927	AUG 22/05	01
928	AUG 22/05	01
929	AUG 22/05	01
930	AUG 22/05	01
931	AUG 22/05	01
932	AUG 22/05	01
933	AUG 22/05	01
934	AUG 22/05	01
935	AUG 22/05	01
936	AUG 22/05	01
937	AUG 22/05	01
938	AUG 22/05	01
939	AUG 22/05	01
940	AUG 22/05	01
941	AUG 22/05	01
942	AUG 22/05	01
943	AUG 22/05	01
944	AUG 22/05	01
945	AUG 22/05	01
946	AUG 22/05	01
947	AUG 22/05	01
948	AUG 22/05	01
949	AUG 22/05	01
950	AUG 22/05	01
951	AUG 22/05	01
952	AUG 22/05	01
953	AUG 22/05	01
954	AUG 22/05	01
955	AUG 22/05	01
956	AUG 22/05	01
957	AUG 22/05	01
958	BLANK	
28-10-00		
201	APR 22/09	02
202	DEC 22/05	01
203	AUG 22/07	03
204	AUG 22/07	03
205	AUG 22/05	02
206	APR 22/04	02
28-10-00		CONT.
207	APR 22/06	02
208	AUG 22/08	02
209	APR 22/04	02
210	APR 22/04	02
211	APR 22/07	02
212	APR 22/06	02
213	APR 22/04	02
214	DEC 22/04	02
215	DEC 22/04	02
216	DEC 22/04	02
217	APR 22/04	02
218	AUG 22/05	02
219	DEC 22/05	02
220	APR 22/07	05
221	DEC 22/04	02
222	APR 22/04	02
223	AUG 22/05	02
224	APR 22/04	02
225	APR 22/04	02
226	DEC 22/05	02
227	AUG 22/08	02
228	DEC 22/04	02
229	DEC 22/04	02
230	AUG 22/08	02
231	APR 22/04	02
232	APR 22/04	02
233	APR 22/04	02
234	DEC 22/04	02
235	APR 22/04	01
236	BLANK	
28-11-00		
1	AUG 22/05	09
2	DEC 22/01	13
3	NOV 10/95	15
4	AUG 22/07	14
5	AUG 22/07	11
6	AUG 22/07	07
7	AUG 22/07	10
8	AUG 22/07	01
28-11-00		
101	MAY 10/92	15
102	MAY 10/93	07
103	FEB 10/91	12
104	FEB 10/91	07
28-11-00		
201	APR 22/06	02
202	FEB 10/97	01
203	FEB 10/97	01
204	DEC 22/99	01
205	APR 22/04	01
206	DEC 22/99	01
207	APR 22/06	01
208	DEC 22/99	01
209	APR 10/98	02
210	DEC 22/00	02

BOEING PROPRIETARY - Copyright (C) - Unpublished Work - See title page for details.

Scandinavian Airlines System

PAGE	DATE	CODE
28-11-00		CONT.
211	APR 22/06	04
212	APR 22/06	01
213	APR 22/06	02
214	APR 22/06	01
215	APR 22/06	01
216	APR 22/09	01
217	APR 22/09	01
218	DEC 22/08	01
219	DEC 22/08	01
220	DEC 22/08	01
221	DEC 22/08	01
222	DEC 22/08	01
223	DEC 22/08	01
224	DEC 22/08	01
225	DEC 22/08	02
226	DEC 22/08	01
227	DEC 22/08	03
228	DEC 22/08	04
229	DEC 22/08	02
230	DEC 22/08	02
231	DEC 22/08	02
232	DEC 22/08	01
233	DEC 22/08	01
234	DEC 22/08	01
235	DEC 22/08	02
236	DEC 22/08	01
237	DEC 22/08	01
238	DEC 22/08	02
239	DEC 22/08	01
240	DEC 22/08	01
241	APR 22/06	02
242	APR 22/06	03
243	APR 22/06	02
244	APR 22/06	02
245	APR 22/06	03
246	APR 22/06	03
247	APR 22/06	07
248	APR 22/06	03
249	APR 22/06	03
250	APR 22/06	03
251	APR 22/06	02
252	APR 22/06	06
28-11-00		
601	APR 22/07	01
602	DEC 22/06	02
603	APR 22/00	01
604	APR 22/04	01
605	AUG 22/99	01
R 606	AUG 22/09	03.1
R 607	AUG 22/09	02.1
608	AUG 22/99	02
609	AUG 22/99	01
610	APR 22/06	01
611	AUG 22/99	01
612	AUG 22/99	01
613	AUG 22/99	01
614	AUG 22/99	01
28-11-00		CONT.
615	AUG 22/99	01
616	AUG 22/99	01
617	DEC 22/04	01
R 618	AUG 22/09	02.1
619	DEC 22/04	01
620	APR 22/04	01
621	APR 22/01	10
622	APR 22/01	06
623	APR 22/05	03
624	APR 22/09	03
625	APR 22/05	03
R 626	AUG 22/09	06.1
627	DEC 22/06	05
628	AUG 22/99	01
629	DEC 22/04	01
630	APR 22/05	03
631	APR 22/05	03
632	AUG 22/99	03
633	AUG 22/99	01
634	DEC 22/04	01
635	AUG 22/05	01
R 636	AUG 22/09	10.1
637	APR 22/09	03
638	AUG 22/05	15
639	AUG 22/05	01
640	AUG 22/05	01
641	AUG 22/05	01
642	AUG 22/05	07
643	AUG 22/05	08
644	DEC 22/06	09
645	DEC 22/06	04
646	DEC 22/06	04
647	DEC 22/06	09
648	DEC 22/06	07
649	DEC 22/06	08
650	BLANK	
28-11-00		
701	DEC 22/08	02
702	DEC 22/08	03
703	DEC 22/08	02
704	DEC 22/08	02
705	DEC 22/08	02
706	DEC 22/08	02
707	DEC 22/08	02
708	DEC 22/08	02
709	DEC 22/08	02
710	DEC 22/08	02
711	DEC 22/08	02
712	DEC 22/08	02
713	DEC 22/08	02
714	BLANK	
28-11-00		
801	APR 22/06	02
802	APR 22/06	02
803	APR 22/06	02
804	APR 22/06	02
28-11-00		CONT.
805	APR 22/06	02
806	APR 22/09	02
807	AUG 22/08	02
808	APR 22/06	02
809	DEC 22/05	02
810	DEC 22/05	02
811	DEC 22/05	02
812	AUG 22/08	03
813	AUG 22/08	02
814	AUG 22/08	02
R 815	AUG 22/09	01.1
816	AUG 22/08	01
817	APR 22/09	01
818	AUG 22/08	02
819	AUG 22/08	02
820	AUG 22/08	02
821	AUG 22/08	02
822	AUG 22/08	02
823	AUG 22/08	02
824	AUG 22/08	02
825	AUG 22/08	02
826	AUG 22/08	02
827	AUG 22/08	02
828	AUG 22/08	02
829	AUG 22/08	02
830	AUG 22/08	02
831	AUG 22/08	02
832	AUG 22/08	02
833	AUG 22/08	02
834	AUG 22/08	02
835	AUG 22/07	02
836	AUG 22/08	02
837	AUG 22/08	02
838	AUG 22/08	02
839	AUG 22/08	02
840	AUG 22/08	02
841	AUG 22/08	02
842	AUG 22/08	04
843	AUG 22/00	01
844	AUG 22/05	01
845	AUG 22/05	01
846	AUG 22/00	01
847	AUG 22/00	01
848	APR 22/09	03
849	DEC 22/04	03
850	APR 22/07	01
851	APR 22/09	01
852	DEC 22/01	01
853	DEC 22/01	01
854	DEC 22/01	03
855	APR 22/07	02
856	BLANK	
28-11-01		
401	APR 22/06	02
402	APR 22/05	01
403	AUG 22/03	01
404	DEC 22/08	01

BOEING PROPRIETARY - Copyright (C) - Unpublished Work - See title page for details.

Scandinavian Airlines System

PAGE	DATE	CODE
28-11-01		CONT.
R 405	AUG 22/09	01.1
406	DEC 22/08	01
407	DEC 22/08	02
408	DEC 22/08	02
R 409	AUG 22/09	02.1
R 410	AUG 22/09	03.1
411	AUG 22/08	03
412	DEC 22/08	03
R 413	AUG 22/09	04.1
R 414	AUG 22/09	03.1
R 415	AUG 22/09	03.1
R 416	AUG 22/09	03.1
417	DEC 22/08	03
418	BLANK	
28-11-02		
401	APR 22/06	16
402	APR 22/05	14
403	DEC 22/08	01
404	DEC 22/08	01
R 405	AUG 22/09	01.1
R 406	AUG 22/09	16.101
R 407	AUG 22/09	03.1
R 408	AUG 22/09	17.101
R 409	AUG 22/09	04.1
R 410	AUG 22/09	02.1
R 411	AUG 22/09	02.1
R 412	AUG 22/09	02.101
28-11-03		
401	DEC 22/08	02
402	APR 22/05	01
403	APR 22/05	01
404	DEC 22/08	01
405	DEC 22/08	02
406	DEC 22/08	01
R 407	AUG 22/09	02.1
R 408	AUG 22/09	02.1
R 409	AUG 22/09	02.1
R 410	AUG 22/09	02.1
28-11-04		
401	APR 22/04	01
402	APR 22/04	01
403	APR 22/04	01
404	APR 22/04	01
405	APR 22/04	02
406	APR 22/04	01
407	APR 22/04	01
408	BLANK	
28-11-04		
601	AUG 22/08	01
602	AUG 22/07	01

PAGE	DATE	CODE
28-11-05		
401	AUG 22/07	05
402	DEC 22/00	09
403	NOV 10/94	02
404	NOV 10/94	01
405	AUG 22/07	04
406	DEC 22/07	13
407	DEC 22/07	14
408	AUG 22/07	04
409	AUG 22/07	13
410	AUG 22/07	11
411	DEC 22/07	06
412	AUG 22/07	05
28-11-06		
401	DEC 22/08	02
402	APR 22/05	01
403	APR 22/05	01
404	DEC 22/08	01
405	APR 22/05	01
406	DEC 22/08	02
407	DEC 22/08	02
408	DEC 22/08	02
28-11-07		
401	AUG 22/07	01
402	DEC 22/00	01
403	AUG 22/99	01
404	AUG 22/99	01
28-11-10		
801	DEC 22/08	03
802	DEC 22/08	01
803	DEC 22/08	03
804	AUG 22/08	03
805	AUG 22/08	03
806	DEC 22/08	02
807	AUG 22/08	02
808	BLANK	
28-11-11		
401	APR 22/09	01
402	APR 22/09	01
403	APR 22/09	01
404	APR 22/09	03
405	APR 22/09	01
406	APR 22/09	01
407	APR 22/09	01
408	APR 22/09	01
409	APR 22/09	01
410	APR 22/09	01
411	APR 22/09	01
412	APR 22/09	01
413	APR 22/09	01
414	BLANK	

PAGE	DATE	CODE
28-13-00		
1	APR 22/04	07
2	DEC 22/01	14
3	FEB 10/93	15
4	FEB 10/93	07
5	APR 22/04	01
6	FEB 10/93	01
7	APR 22/04	01
8	BLANK	
28-13-00		
101	FEB 10/91	01
102	FEB 10/91	01
103	FEB 10/91	01
104	BLANK	
28-13-01		
401	MAY 10/96	01
402	FEB 10/90	01
403	APR 22/06	01
404	APR 22/04	01
405	MAY 10/96	01
406	BLANK	
28-13-03		
401	MAY 10/96	01
402	FEB 10/90	01
403	AUG 22/99	01
404	AUG 22/99	01
405	FEB 10/90	01
406	BLANK	
28-13-04		
201	FEB 10/91	01
202	FEB 10/90	01
203	AUG 22/99	01
204	FEB 10/90	01
205	FEB 10/91	01
206	FEB 10/91	01
28-13-04		
601	AUG 22/07	01
602	AUG 22/07	01
603	AUG 22/07	01
604	BLANK	
28-13-05		
401	AUG 10/93	01
402	FEB 10/90	01
403	APR 22/01	01
404	DEC 22/01	01
405	APR 22/01	01
406	BLANK	
28-13-06		
401	FEB 10/90	01
402	FEB 10/90	01
403	FEB 10/90	01
404	BLANK	

BOEING PROPRIETARY - Copyright (C) - Unpublished Work - See title page for details.

Scandinavian Airlines System

PAGE	DATE	CODE
28-13-07		
601	MAY 10/92	01
602	MAY 10/92	01
603	MAY 10/92	01
604	MAY 10/92	01
605	MAY 10/92	01
606	MAY 10/92	01
607	MAY 10/92	01
608	APR 22/04	01
28-21-00		
1	DEC 22/01	18
2	DEC 22/01	25
3	DEC 22/01	17
4	DEC 22/01	12
5	FEB 10/93	06
6	MAY 10/97	03
7	FEB 10/93	06
8	APR 22/04	09
9	FEB 10/93	22
10	AUG 22/01	12
11	DEC 22/01	13
12	DEC 22/01	16
13	DEC 22/99	10
14	FEB 10/93	14
15	DEC 22/01	02
16	DEC 22/01	02
17	FEB 10/93	18
18	FEB 10/93	15
19	AUG 22/99	24
20	DEC 22/99	28
21	FEB 10/93	15
22	FEB 10/93	10
28-21-00		
101	AUG 22/01	02
102	FEB 10/91	18
103	APR 22/04	04
104	FEB 10/91	01
105	FEB 10/91	17
106	FEB 10/91	05
107	FEB 10/91	03
108	BLANK	
28-21-00		
501	AUG 22/08	03
502	DEC 22/01	06
503	AUG 22/99	01
504	APR 22/07	03
505	DEC 22/04	01
506	DEC 22/04	01
507	DEC 22/04	05
508	DEC 22/04	05
509	APR 22/07	03
510	AUG 22/06	01
511	DEC 22/04	05
512	DEC 22/04	02
513	DEC 22/04	02
514	DEC 22/04	02
28-21-00		CONT.
515	DEC 22/04	02
516	DEC 22/04	01
28-21-00		
601	DEC 22/04	01
602	DEC 22/04	01
603	DEC 22/04	01
604	DEC 22/04	01
605	DEC 22/04	01
606	DEC 22/04	01
28-21-01		
401	AUG 10/98	01
402	DEC 10/98	01
403	APR 22/04	01
404	APR 22/04	01
405	APR 22/04	01
406	AUG 22/99	01
407	APR 22/04	01
408	AUG 22/99	01
28-21-01		
601	AUG 22/08	01
602	AUG 22/08	01
603	AUG 22/07	02
604	BLANK	
28-21-02		
401	AUG 22/99	01
402	AUG 22/99	01
403	DEC 22/07	01
404	AUG 22/05	01
405	APR 22/07	04
406	APR 22/07	04
R 407	AUG 22/09	04.1
R 408	AUG 22/09	04.1
R 409	AUG 22/09	03.1
410	BLANK	
28-21-03		
401	AUG 22/99	02
402	FEB 10/90	01
403	AUG 22/99	02
404	AUG 22/99	01
28-21-04		
401	AUG 22/08	01
402	FEB 10/91	01
403	AUG 22/08	01
404	FEB 10/90	01
28-21-05		
401	MAY 10/96	01
402	FEB 10/90	01
403	AUG 22/99	01
404	AUG 22/99	01
28-21-06		
401	AUG 22/99	03
402	AUG 10/90	20
403	AUG 22/99	21
404	AUG 22/99	03
28-21-07		
401	APR 22/99	01
402	APR 22/01	01
403	APR 22/99	01
404	APR 22/99	01
28-21-08		
401	APR 22/99	15
402	APR 22/99	12
403	APR 22/99	12
404	MAY 10/90	03
405	AUG 22/04	09
406	BLANK	
28-21-09		
401	APR 22/99	01
402	APR 22/04	01
403	APR 22/04	01
404	APR 22/04	01
28-21-10		
401	AUG 10/94	01
402	BLANK	
28-21-11		
R 401	AUG 22/09	02.1
R 402	AUG 22/09	03.101
R 403	AUG 22/09	02.101
R 404	AUG 22/09	04.1
405	AUG 22/05	02
406	NOV 10/95	02
407	NOV 10/95	02
408	AUG 22/05	02
409	DEC 22/01	02
410	DEC 22/05	02
411	NOV 10/95	01
412	BLANK	
28-21-12		
401	AUG 22/00	01
402	FEB 10/90	01
403	AUG 22/00	01
404	APR 22/08	02
405	AUG 22/08	02
406	AUG 22/08	04
28-21-12		
601	AUG 22/08	01
602	AUG 22/08	01
603	AUG 22/08	02
604	AUG 22/07	01

BOEING PROPRIETARY - Copyright (C) - Unpublished Work - See title page for details.

Scandinavian Airlines System

PAGE	DATE	CODE
28-21-13		
401	APR 22/05	01
402	DEC 22/01	05
403	APR 22/05	01
404	APR 22/06	04
405	APR 22/06	02
406	APR 22/09	06
407	APR 22/09	01
408	BLANK	
28-21-13		
R 501	AUG 22/09	02.1
502	APR 22/09	05
R 503	AUG 22/09	02.101
504	APR 22/09	01
R 505	AUG 22/09	01.101
506	APR 22/09	01
R 507	AUG 22/09	01.101
R 508	AUG 22/09	01.101
R 509	AUG 22/09	01.101
R 510	AUG 22/09	01.101
R 511	AUG 22/09	01.101
R 512	AUG 22/09	01.1
R 513	AUG 22/09	02.101
R 514	BLANK	
D 515	DELETED	02
D 516	DELETED	
28-22-00		
1	AUG 22/99	28
2	NOV 10/97	33
3	NOV 10/97	34
4	AUG 22/99	03
5	AUG 22/99	12
6	AUG 22/99	09
7	NOV 10/92	02
8	APR 22/04	06
9	AUG 22/05	06
10	APR 22/04	02
11	AUG 22/05	20
12	APR 22/00	21
13	AUG 22/05	25
14	APR 22/04	18
15	AUG 22/05	04
16	NOV 10/97	28
17	APR 22/04	22
18	NOV 10/93	32
19	DEC 22/06	20
20	NOV 10/92	10
21	DEC 22/01	07
22	DEC 22/01	04
23	DEC 22/01	04
24	DEC 22/01	04
25	APR 22/03	02
26	DEC 22/01	04
27	DEC 22/01	03
28	DEC 22/01	03
29	DEC 22/01	05
30	APR 22/03	05

PAGE	DATE	CODE
28-22-00		CONT.
31	NOV 10/92	08
32	NOV 10/93	11
33	DEC 22/04	14
34	AUG 22/01	10
28-22-00		
101	AUG 22/01	27
102	NOV 10/93	15
103	FEB 10/91	01
104	NOV 10/97	33
105	DEC 22/00	12
106	DEC 22/00	07
107	DEC 22/01	02
108	BLANK	
28-22-00		
501	AUG 22/04	10
502	DEC 22/01	08
503	DEC 22/01	18
504	DEC 22/08	06
505	DEC 22/08	01
506	DEC 22/08	05
507	DEC 22/08	05
508	DEC 22/08	01
509	DEC 22/08	03
510	DEC 22/08	02
511	DEC 22/08	07
512	DEC 22/08	01
513	DEC 22/08	01
514	AUG 22/05	04
515	APR 22/09	01
516	DEC 22/08	08
517	DEC 22/08	01
518	DEC 22/08	01
519	DEC 22/08	05
520	DEC 22/08	04
521	DEC 22/08	04
522	DEC 22/08	04
523	DEC 22/08	04
524	DEC 22/08	04
525	DEC 22/08	08
526	DEC 22/08	09
527	DEC 22/08	12
528	DEC 22/08	14
529	DEC 22/08	11
R 530	AUG 22/09	09.1
531	AUG 22/07	16
532	DEC 22/08	11
533	DEC 22/08	10
534	DEC 22/08	10
535	DEC 22/08	10
536	AUG 22/08	11
537	DEC 22/08	11
538	DEC 22/07	08
R 539	AUG 22/09	07.1
540	AUG 22/08	06
541	DEC 22/08	07
542	DEC 22/08	06

PAGE	DATE	CODE
28-22-00		CONT.
543	DEC 22/08	05
544	BLANK	
28-22-01		
401	AUG 22/03	01
402	MAY 10/90	01
403	APR 22/07	01
404	APR 22/07	01
405	APR 22/07	02
406	APR 22/07	02
407	APR 22/07	02
408	APR 22/07	02
409	APR 22/07	02
410	APR 22/07	02
411	DEC 22/08	02
412	DEC 22/08	02
413	DEC 22/08	02
414	APR 22/07	02
415	DEC 22/08	01
416	DEC 22/08	01
R 417	AUG 22/09	02.1
R 418	AUG 22/09	01.1
R 419	AUG 22/09	01.1
R 420	AUG 22/09	01.101
R 421	AUG 22/09	01.101
422	APR 22/07	01
423	APR 22/07	01
424	APR 22/07	01
425	APR 22/07	01
426	BLANK	
28-22-02		
401	APR 22/99	03
402	NOV 10/93	33
403	APR 22/07	25
404	APR 22/09	02
405	APR 22/07	03
406	APR 22/07	05
407	APR 22/07	04
408	APR 22/07	03
409	APR 22/07	03
410	APR 22/07	02
411	APR 22/07	26
412	AUG 22/07	25
413	DEC 22/08	03
414	DEC 22/08	24
415	DEC 22/08	02
416	APR 22/07	03
417	DEC 22/08	04
R 418	AUG 22/09	04.1
R 419	AUG 22/09	03.1
R 420	AUG 22/09	03.1
R 421	AUG 22/09	03.1
R 422	AUG 22/09	25.101
R 423	AUG 22/09	01.101
424	DEC 22/08	11
425	APR 22/07	06
426	APR 22/07	04

BOEING PROPRIETARY - Copyright (C) - Unpublished Work - See title page for details.

Scandinavian Airlines System

PAGE	DATE	CODE
28-22-02		CONT.
427	APR 22/07	01
428	BLANK	
28-22-03		
401	DEC 22/07	02
402	MAY 10/97	01
403	MAY 10/96	01
404	APR 22/04	01
405	APR 22/07	01
406	APR 22/06	01
407	DEC 22/07	01
408	DEC 22/07	01
409	NOV 10/90	01
410	AUG 22/05	01
411	NOV 10/90	01
412	DEC 22/07	01
413	APR 22/07	01
R 414	AUG 22/09	02.1
R 415	AUG 22/09	02.1
416	DEC 22/07	01
417	APR 22/04	01
418	APR 22/04	01
419	DEC 22/07	02
420	DEC 22/08	02
421	DEC 22/08	02
R 422	AUG 22/09	02.101
R 423	AUG 22/09	02.1
R 424	AUG 22/09	02.101
R 425	AUG 22/09	02.101
426	DEC 22/07	02
427	DEC 22/07	02
428	DEC 22/07	02
429	DEC 22/07	02
430	DEC 22/07	02
431	DEC 22/07	02
432	DEC 22/07	02
433	DEC 22/07	02
R 434	AUG 22/09	02.1
R 435	AUG 22/09	02.1
436	DEC 22/07	02
437	DEC 22/07	02
438	DEC 22/07	01
439	AUG 22/05	01
440	APR 22/04	01
28-22-03		
601	AUG 22/07	03
602	AUG 22/07	03
603	AUG 22/07	03
604	AUG 22/07	01
605	APR 22/09	01
606	AUG 22/07	01
28-22-04		
401	MAY 10/90	01
402	MAY 10/90	01
403	APR 22/04	01
404	AUG 22/99	01
28-22-05	CONFIG 1	
401	DEC 22/08	17
402	NOV 10/97	22
403	NOV 10/97	22
404	DEC 22/08	17
405	DEC 22/08	17
406	DEC 22/08	17
407	AUG 22/05	17
408	NOV 10/97	18
409	NOV 10/97	22
410	NOV 10/97	22
R 411	AUG 22/09	17.1
412	NOV 10/97	22
R 413	AUG 22/09	17.1
414	AUG 22/05	16
415	AUG 22/05	16
416	AUG 22/05	16
417	AUG 22/05	16
418	DEC 22/08	17
419	DEC 22/99	16
420	NOV 10/97	22
421	DEC 22/05	17
R 422	AUG 22/09	17.1
423	APR 22/07	16
424	DEC 22/08	16
425	DEC 22/08	15
426	AUG 22/05	15
427	DEC 22/01	16
428	NOV 10/97	22
429	AUG 22/05	16
430	APR 22/02	16
431	NOV 10/97	22
R 432	AUG 22/09	17.1
R 433	AUG 22/09	16.1
434	AUG 22/00	16
435	AUG 22/05	16
436	AUG 22/05	15
28-22-05	CONFIG 2	
401	DEC 22/00	16
402	DEC 22/00	16
403	DEC 22/00	16
404	DEC 22/00	16
405	APR 22/04	17
406	DEC 22/00	16
407	DEC 22/00	16
408	DEC 22/00	16
409	DEC 22/00	16
410	DEC 22/08	17
411	DEC 22/08	17
412	DEC 22/08	17
413	DEC 22/00	16
R 414	AUG 22/09	17.1
R 415	AUG 22/09	17.101
R 416	AUG 22/09	17.101
R 417	AUG 22/09	17.101
R 418	AUG 22/09	17.101
R 419	AUG 22/09	17.101
R 420	AUG 22/09	16.101
28-22-05	CONFIG 2	CONT.
R 421	AUG 22/09	17.1
R 422	AUG 22/09	18.101
R 423	AUG 22/09	18.101
R 424	AUG 22/09	17.101
R 425	AUG 22/09	17.101
R 426	AUG 22/09	18.101
427	DEC 22/00	16
428	DEC 22/00	16
429	APR 22/02	16
430	APR 22/04	17
431	DEC 22/00	16
432	DEC 22/00	16
R 433	AUG 22/09	21.1
434	APR 22/04	16
435	APR 22/02	10
436	APR 22/02	05
437	APR 22/04	03
438	BLANK	
28-22-05	CONFIG 1	
601	AUG 22/07	17
602	AUG 22/07	17
603	AUG 22/07	17
604	BLANK	
28-22-05	CONFIG 2	
601	AUG 22/07	17
602	AUG 22/07	17
603	APR 22/09	17
604	BLANK	
28-22-06		
401	DEC 22/01	01
402	AUG 22/08	01
403	AUG 22/08	02
404	DEC 22/08	03
405	AUG 22/08	03
406	AUG 22/08	03
407	AUG 22/08	03
408	APR 22/07	03
409	APR 22/07	02
410	APR 22/07	02
28-22-07		
401	AUG 22/05	01A
402	DEC 22/00	01A
403	DEC 22/00	01A
404	DEC 22/00	01A
405	DEC 22/08	01A
406	APR 22/05	01A
407	APR 22/05	02A
408	APR 22/05	01A
409	APR 22/05	01A
410	DEC 22/08	02A
411	APR 22/05	02A
412	APR 22/05	02A
413	APR 22/05	02A
414	APR 22/05	02A

BOEING PROPRIETARY - Copyright (C) - Unpublished Work - See title page for details.

Scandinavian Airlines System

PAGE	DATE	CODE
28-22-07		CONT.
415	AUG 22/05	02A
416	APR 22/05	02A
417	AUG 22/06	02A
418	AUG 22/05	02A
419	AUG 22/06	02A
R 420	AUG 22/09	03A.1
R 421	AUG 22/09	03A.1
R 422	AUG 22/09	03A.101
R 423	AUG 22/09	03A.101
R 424	AUG 22/09	03A.101
R 425	AUG 22/09	03A.101
426	APR 22/05	01A
427	AUG 22/06	03A
428	DEC 22/05	03A
429	DEC 22/05	03A
430	DEC 22/05	03A
431	APR 22/05	02A
432	APR 22/05	02A
433	APR 22/09	03A
434	APR 22/06	03A
R 435	AUG 22/09	03A.1
436	APR 22/06	03A
28-22-07		
601	AUG 22/08	06
602	AUG 22/07	01
603	APR 22/08	02
604	AUG 22/07	02
605	AUG 22/07	02
R 606	AUG 22/09	03.1
R 607	AUG 22/09	02.101
608	AUG 22/07	02
609	AUG 22/07	01
610	AUG 22/07	01
28-22-08		
R 701	AUG 22/09	02.1
702	FEB 10/90	01
703	DEC 22/04	01
704	BLANK	
28-22-09		
401	NOV 10/97	22
402	NOV 10/97	21
403	MAY 10/90	03
404	FEB 10/90	01
28-22-10		
401	MAY 10/90	06
402	MAY 10/90	06
403	MAY 10/90	06
404	MAY 10/90	06
28-22-11		
401	APR 22/05	01
402	APR 22/07	01
403	APR 22/07	02
404	APR 22/07	02

PAGE	DATE	CODE
28-22-11		CONT.
405	APR 22/07	01
406	APR 22/07	01
407	APR 22/08	02
408	APR 22/09	04
409	APR 22/09	03
R 410	AUG 22/09	04.1
R 411	AUG 22/09	02.1
R 412	AUG 22/09	02.1
R 413	AUG 22/09	03.1
R 414	AUG 22/09	03.101
28-22-11		
601	APR 22/09	01
602	AUG 22/07	01
603	AUG 22/07	01
604	DEC 22/08	02
R 605	AUG 22/09	03.1
R 606	AUG 22/09	02.1
28-22-12		
401	DEC 22/00	02
402	APR 22/07	02
403	APR 22/07	04
404	APR 22/07	02
405	APR 22/07	03
406	APR 22/07	03
407	APR 22/07	02
408	APR 22/07	02
409	APR 22/07	02
410	APR 22/07	02
411	APR 22/09	02
412	APR 22/09	03
413	APR 22/09	03
R 414	AUG 22/09	02.1
R 415	AUG 22/09	02.1
R 416	AUG 22/09	01.1
R 417	AUG 22/09	02.101
R 418	AUG 22/09	02.101
28-22-12		
601	APR 22/09	02
602	AUG 22/07	02
603	DEC 22/08	02
604	AUG 22/07	02
605	DEC 22/08	02
606	AUG 22/08	01
R 607	AUG 22/09	01.1
R 608	AUG 22/09	01.1
28-22-13		
401	APR 22/99	14
402	AUG 10/95	08
403	APR 22/99	15
404	APR 22/99	15
405	APR 22/99	14
406	BLANK	

PAGE	DATE	CODE
28-22-15		
401	APR 22/04	01
402	APR 22/99	01
403	APR 22/99	01
404	APR 22/99	01
405	APR 22/99	01
406	AUG 22/01	01
407	AUG 22/08	01
408	APR 22/08	02
409	APR 22/99	01
410	APR 22/08	02
411	AUG 22/08	02
412	BLANK	
28-22-15		
601	APR 22/08	02
602	APR 22/99	01
603	APR 22/99	01
604	APR 22/01	01
605	AUG 22/05	02
606	AUG 22/08	04
607	APR 22/08	03
608	APR 22/08	03
609	APR 22/08	03
610	APR 22/08	03
611	APR 22/08	03
612	AUG 22/08	02
613	APR 22/08	02
614	APR 22/08	01
28-22-17		
401	AUG 22/06	01
402	AUG 22/06	01
403	AUG 22/06	01
404	BLANK	
28-25-00		
1	AUG 10/93	07
2	AUG 22/08	27
3	NOV 10/92	01
4	AUG 22/05	03
5	DEC 22/01	04
6	DEC 22/01	27
7	DEC 22/99	08
8	BLANK	
28-25-00		
101	NOV 10/93	30
102	NOV 10/93	01
103	NOV 10/93	30
104	AUG 10/95	01
28-25-00		
201	DEC 22/08	02
202	AUG 10/90	01
203	DEC 22/08	03
204	AUG 22/07	02
205	AUG 22/07	03
206	BLANK	

BOEING PROPRIETARY - Copyright (C) - Unpublished Work - See title page for details.

Scandinavian Airlines System

PAGE	DATE	CODE
28-25-00		
501	DEC 22/01	02
502	NOV 10/93	32
503	FEB 10/95	27
504	DEC 22/00	26
505	DEC 22/99	19
506	AUG 22/07	21
507	MAY 10/95	03
508	MAY 10/95	02
509	AUG 22/08	02
510	MAY 10/95	02
511	DEC 22/01	02
512	DEC 22/05	01
513	AUG 22/02	01
514	BLANK	
28-25-01		
401	APR 22/00	01
402	AUG 10/92	01
403	APR 22/04	01
404	APR 22/04	01
405	APR 22/04	01
406	APR 22/04	01
407	AUG 22/08	01
408	APR 22/04	01
409	APR 22/04	01
410	BLANK	
28-25-01		
601	AUG 22/08	01
602	AUG 22/07	01
603	AUG 22/08	01
604	AUG 22/08	01
28-25-02		
401	APR 22/00	01
402	APR 22/07	02
403	APR 22/07	02
404	APR 22/07	02
405	APR 22/08	01
406	APR 22/09	01
407	APR 22/07	02
R 408	AUG 22/09	02.1
R 409	AUG 22/09	01.1
R 410	AUG 22/09	01.1
R 411	AUG 22/09	01.1
R 412	AUG 22/09	01.101
R 413	AUG 22/09	01.101
R 414	AUG 22/09	02.101
28-25-02		
601	APR 22/09	01
602	AUG 22/07	01
603	AUG 22/07	01
R 604	AUG 22/09	01.1
R 605	AUG 22/09	01.101
R 606	BLANK	
28-25-03		
401	DEC 22/02	01
402	DEC 22/02	01
403	DEC 22/02	01
404	DEC 22/02	01
28-25-04		
401	APR 22/00	27
402	APR 22/07	25
403	APR 22/07	25
404	APR 22/07	25
405	APR 22/09	25
406	APR 22/07	24
407	APR 22/07	25
R 408	AUG 22/09	25.1
R 409	AUG 22/09	24.1
R 410	AUG 22/09	24.1
R 411	AUG 22/09	24.101
412	APR 22/09	24
413	APR 22/09	24
414	APR 22/09	24
28-25-04		
601	APR 22/09	24
602	AUG 22/07	24
603	AUG 22/07	24
604	AUG 22/08	24
R 605	AUG 22/09	24.1
R 606	AUG 22/09	24.101
28-25-05		
401	DEC 22/05	10
402	NOV 10/90	07
403	NOV 10/90	03
404	AUG 22/08	07
405	AUG 22/08	03
406	NOV 10/90	01
407	DEC 22/04	01
408	APR 22/00	04
409	AUG 22/00	03
410	APR 22/00	04
411	APR 22/00	14
412	APR 22/00	14
413	AUG 22/00	07
414	APR 22/00	16
415	APR 22/00	15
416	DEC 22/07	13
417	APR 22/00	15
418	AUG 22/00	15
419	APR 22/00	14
420	APR 22/00	12
421	APR 22/00	10
422	APR 22/04	08
423	APR 22/00	13
424	BLANK	
28-26-00		
1	AUG 22/04	21
2	DEC 22/01	24
3	DEC 22/01	16
4	DEC 22/01	12
5	NOV 10/92	03
6	AUG 22/99	13
7	DEC 22/01	10
8	DEC 22/01	03
9	NOV 10/96	03
10	AUG 22/03	10
11	APR 22/03	01
12	APR 22/03	02
13	AUG 22/03	09
14	BLANK	
28-26-00		
101	FEB 10/95	17
102	FEB 10/95	17
103	DEC 22/01	06
104	BLANK	
28-26-00		
201	DEC 22/00	17
202	DEC 22/01	06
203	DEC 22/00	02
204	NOV 10/90	01
205	DEC 22/06	17
206	AUG 22/04	15
207	APR 22/05	09
208	DEC 22/07	11
209	DEC 22/07	08
210	DEC 22/07	07
211	DEC 22/07	08
212	DEC 22/07	11
213	DEC 22/07	11
214	DEC 22/07	10
215	DEC 22/07	23
216	DEC 22/07	15
217	DEC 22/07	14
218	DEC 22/07	13
219	DEC 22/07	01
220	DEC 22/07	17
221	AUG 22/04	25
222	AUG 22/04	25
223	DEC 22/07	12
224	DEC 22/07	12
28-26-01		
401	AUG 22/07	06
402	AUG 10/90	15
403	APR 22/07	03
404	APR 22/07	01
405	APR 22/07	03
406	APR 22/07	01
407	AUG 22/07	07
408	AUG 22/07	08
409	AUG 22/07	06
410	DEC 22/08	08

BOEING PROPRIETARY - Copyright (C) - Unpublished Work - See title page for details.

Scandinavian Airlines System

PAGE	DATE	CODE
28-26-01		CONT.
411	DEC 22/08	10
412	DEC 22/08	11
413	DEC 22/08	11
414	DEC 22/08	10
R 415	AUG 22/09	16.1
R 416	AUG 22/09	10.1
R 417	AUG 22/09	08.1
R 418	AUG 22/09	09.1
R 419	AUG 22/09	07.101
R 420	AUG 22/09	06.101
R 421	AUG 22/09	08.101
R 422	AUG 22/09	08.101
423	DEC 22/06	08
424	BLANK	
28-26-11		
R 401	AUG 22/09	04.1
402	APR 22/07	01
403	DEC 22/07	02
404	APR 22/07	02
405	APR 22/07	01
406	APR 22/09	04
R 407	AUG 22/09	06.1
408	APR 22/07	05
R 409	AUG 22/09	04.1
R 410	AUG 22/09	03.1
R 411	AUG 22/09	03.1
R 412	AUG 22/09	03.101
R 413	AUG 22/09	08.101
414	BLANK	
28-26-11		
R 601	AUG 22/09	02.1
602	AUG 22/07	01
603	AUG 22/07	01
604	AUG 22/08	03
R 605	AUG 22/09	02.1
R 606	AUG 22/09	03.1
28-31-00		
1	DEC 22/01	17
2	DEC 22/01	17
3	DEC 22/01	17
4	DEC 22/01	17
5	DEC 22/01	16
6	DEC 22/01	15
7	MAY 10/97	15
8	MAY 10/97	12
9	MAY 10/97	12
10	MAY 10/97	12
11	MAY 10/97	12
12	MAY 10/97	12
13	MAY 10/97	14
14	MAY 10/97	12
15	MAY 10/97	02
16	AUG 22/99	03
17	MAY 10/97	02
18	AUG 22/99	02
28-31-00		CONT.
19	AUG 22/99	01
20	BLANK	
28-31-00		
101	DEC 22/00	17
102	MAY 10/97	19
103	MAY 10/97	13
104	MAY 10/97	13
105	MAY 10/97	12
106	MAY 10/97	15
28-31-00	CONFIG 1	
501	APR 22/06	03
502	APR 22/06	03
503	APR 22/06	04
504	DEC 22/07	10
505	APR 22/06	03
506	APR 22/06	03
507	APR 22/06	03
508	APR 22/06	03
509	APR 22/06	04
510	APR 22/06	03
511	APR 22/06	04
512	APR 22/06	04
513	APR 22/06	04
514	APR 22/06	03
515	APR 22/06	04
516	APR 22/06	03
517	APR 22/06	03
518	AUG 22/08	09
519	APR 22/06	03
520	AUG 22/08	10
521	DEC 22/07	08
522	BLANK	
28-31-00	CONFIG 2	
501	DEC 22/05	10
502	MAY 10/97	10
503	APR 22/05	04
504	DEC 22/07	10
505	AUG 22/01	13
506	AUG 22/01	13
507	AUG 22/01	13
508	AUG 22/01	13
509	APR 22/04	11
510	AUG 22/03	11
511	DEC 22/01	12
512	APR 22/04	07
513	AUG 22/03	11
514	APR 22/04	11
515	APR 22/04	06
516	APR 22/04	11
517	APR 22/04	11
518	APR 22/04	11
519	APR 22/04	11
520	APR 22/04	11
R 521	AUG 22/09	10.101
R 522	AUG 22/09	11.1
28-31-00	CONFIG 2	CONT.
R 523	AUG 22/09	11.101
R 524	AUG 22/09	12.101
R 525	AUG 22/09	12.101
R 526	AUG 22/09	02.101
28-31-01		
401	MAY 10/97	15
402	MAY 10/97	14
403	MAY 10/97	14
404	MAY 10/97	14
405	MAY 10/97	14
406	MAY 10/97	14
407	DEC 22/06	18
408	DEC 22/06	18
409	DEC 22/06	18
410	DEC 22/08	17
411	AUG 22/08	18
R 412	AUG 22/09	18.1
413	AUG 22/08	14
414	AUG 22/08	01
28-31-01		
601	AUG 22/07	18
602	AUG 22/07	18
603	AUG 22/07	18
604	BLANK	
28-31-03		
401	DEC 22/99	16
402	APR 22/07	19
403	APR 22/07	19
404	APR 22/07	19
405	APR 22/07	19
406	APR 22/07	19
407	APR 22/07	19
408	APR 22/07	19
409	APR 22/07	19
410	APR 22/07	19
411	DEC 22/08	18
412	DEC 22/08	18
413	DEC 22/08	18
414	APR 22/07	19
415	DEC 22/08	18
R 416	AUG 22/09	18.1
R 417	AUG 22/09	18.1
R 418	AUG 22/09	18.1
R 419	AUG 22/09	18.1
R 420	AUG 22/09	18.101
R 421	AUG 22/09	18.101
R 422	AUG 22/09	19.101
423	APR 22/07	18
424	DEC 22/08	18
28-31-03		
601	APR 22/07	18
602	APR 22/07	18
603	APR 22/07	18
604	DEC 22/07	18

BOEING PROPRIETARY - Copyright (C) - Unpublished Work - See title page for details.

Scandinavian Airlines System

PAGE	DATE	CODE
28-31-04		
401	MAY 10/97	16
402	APR 22/07	19
403	APR 22/07	19
404	APR 22/08	18
405	APR 22/09	19
406	APR 22/07	19
R 407	AUG 22/09	18.1
R 408	AUG 22/09	18.1
R 409	AUG 22/09	18.1
R 410	AUG 22/09	18.101
28-31-04		
601	APR 22/09	18
602	AUG 22/07	18
603	AUG 22/07	18
R 604	AUG 22/09	18.1
R 605	AUG 22/09	18.1
606	BLANK	
28-31-05		
401	DEC 10/98	16
402	APR 22/07	19
403	APR 22/07	19
404	APR 22/07	19
405	APR 22/09	19
406	APR 22/09	18
407	APR 22/09	19
R 408	AUG 22/09	18.1
R 409	AUG 22/09	19.1
R 410	AUG 22/09	18.1
R 411	AUG 22/09	18.101
412	BLANK	
28-31-05		
601	APR 22/09	18
602	AUG 22/07	18
603	AUG 22/07	18
604	AUG 22/07	18
R 605	AUG 22/09	18.1
R 606	AUG 22/09	18.101
28-31-06		
401	DEC 22/00	16
402	APR 22/07	19
403	APR 22/07	19
404	APR 22/07	19
405	APR 22/07	19
406	APR 22/07	19
407	APR 22/07	19
408	APR 22/07	19
409	APR 22/07	19
410	APR 22/07	19
411	DEC 22/08	18
412	DEC 22/08	18
413	DEC 22/08	18
414	DEC 22/08	18
415	DEC 22/08	18
416	DEC 22/08	18
28-31-06		CONT.
R 417	AUG 22/09	18.1
R 418	AUG 22/09	18.1
R 419	AUG 22/09	18.1
R 420	AUG 22/09	18.1
R 421	AUG 22/09	18.101
R 422	AUG 22/09	17.101
423	APR 22/07	18
424	DEC 22/08	18
425	DEC 22/08	07
426	BLANK	
28-31-08		
401	DEC 22/99	12
402	DEC 22/99	12
403	DEC 22/99	11
404	BLANK	
28-41-00	CONFIG 1	
1	DEC 22/01	15
2	DEC 22/01	16
3	DEC 22/01	16
4	DEC 22/01	16
5	MAY 10/96	23
6	MAY 10/96	24
7	MAY 10/96	24
8	DEC 22/06	11
9	MAY 10/96	24
10	MAY 10/96	24
11	MAY 10/96	24
12	MAY 10/96	24
13	DEC 22/01	12
14	MAY 10/96	12
15	DEC 22/00	16
16	DEC 22/01	15
17	DEC 22/01	12
18	MAY 10/96	13
19	DEC 22/99	19
20	MAY 10/96	14
21	APR 22/00	17
22	APR 22/00	16
23	MAY 10/96	15
24	MAY 10/96	12
25	MAY 10/96	12
26	MAY 10/96	12
27	MAY 10/96	13
28	MAY 10/96	13
29	MAY 10/96	14
30	MAY 10/96	13
31	MAY 10/96	14
32	MAY 10/96	14
33	DEC 22/01	16
34	DEC 22/01	16
35	MAY 10/96	14
36	MAY 10/96	14
37	DEC 22/04	21
38	BLANK	
28-41-00	CONFIG 2	
1	DEC 22/01	16
2	DEC 22/01	16
3	DEC 22/01	16
4	DEC 22/01	16
5	AUG 10/95	24
6	AUG 10/95	24
7	AUG 10/95	24
8	DEC 22/01	16
9	APR 22/04	17
10	APR 22/04	17
11	DEC 22/01	16
12	AUG 22/05	17
13	DEC 22/01	16
14	AUG 10/95	24
15	AUG 10/95	24
16	AUG 10/95	24
17	AUG 10/95	24
18	AUG 10/95	24
19	AUG 10/95	24
20	AUG 10/95	24
21	APR 22/09	17
22	AUG 10/95	24
23	AUG 10/95	24
24	AUG 10/95	24
25	AUG 10/95	24
26	AUG 10/95	24
27	DEC 22/01	16
28	DEC 22/01	16
29	DEC 22/00	19
30	AUG 10/95	24
31	DEC 22/04	20
32	BLANK	
28-41-00	CONFIG 1	
101	MAY 10/96	14A
102	MAY 10/96	14A
103	MAY 10/96	14A
104	MAY 10/96	14A
105	MAY 10/96	14A
106	MAY 10/96	14A
107	MAY 10/96	14A
108	MAY 10/96	14A
109	MAY 10/96	14A
110	MAY 10/96	14A
111	MAY 10/96	14A
112	MAY 10/96	14A
113	MAY 10/96	14A
114	DEC 22/01	15A
28-41-00	CONFIG 2	
101	DEC 22/05	17
102	AUG 10/95	24
103	AUG 10/95	24
104	DEC 22/00	17
105	AUG 10/95	24
106	DEC 22/01	16
107	APR 22/04	17
108	AUG 10/95	24

BOEING PROPRIETARY - Copyright (C) - Unpublished Work - See title page for details.

Scandinavian Airlines System

PAGE	DATE	CODE
28-41-00	CONFIG 2	CONT.
109	AUG 10/95	24
110	AUG 10/95	24
111	AUG 10/95	24
112	APR 22/09	17
113	AUG 10/95	24
114	AUG 10/95	24
115	APR 22/06	17
116	BLANK	
28-41-00	CONFIG 1	
R 501	AUG 22/09	17.1
502	DEC 22/01	16
503	DEC 22/01	16
504	MAY 10/96	14
505	AUG 10/97	15
506	APR 22/05	17
507	DEC 22/01	16
508	DEC 22/01	16
509	MAY 10/96	14
510	MAY 10/96	14
511	MAY 10/96	14
512	MAY 10/96	14
513	MAY 10/96	14
514	MAY 10/96	14
515	MAY 10/96	14
516	AUG 22/04	17
517	AUG 22/04	17
518	DEC 22/01	16
519	MAY 10/96	14
520	MAY 10/96	14
521	APR 22/07	16
522	AUG 22/05	14
523	AUG 22/08	15
524	MAY 10/96	14
525	FEB 10/97	15
526	MAY 10/96	14
527	MAY 10/96	14
528	AUG 22/00	16
529	AUG 22/05	16
530	AUG 22/08	17
531	AUG 22/00	17
532	AUG 22/00	17
533	AUG 22/00	17
534	AUG 22/00	17
535	AUG 22/00	17
536	AUG 22/00	17
R 537	AUG 22/09	17.1
R 538	AUG 22/09	17.1
R 539	AUG 22/09	17.1
R 540	AUG 22/09	17.1
R 541	AUG 22/09	15.1
R 542	BLANK	
28-41-00	CONFIG 2	
R 501	AUG 22/09	17.1
502	DEC 22/01	16
503	DEC 22/07	17
504	AUG 10/95	24
28-41-00	CONFIG 2	CONT.
505	DEC 22/01	16
506	APR 22/05	17
507	DEC 22/04	17
508	DEC 22/04	17
509	DEC 22/04	17
510	DEC 22/04	17
511	DEC 22/04	17
R 512	AUG 22/09	17.101
R 513	AUG 22/09	17.101
R 514	AUG 22/09	17.101
515	DEC 22/04	17
516	DEC 22/04	17
517	AUG 22/08	17
518	DEC 22/04	17
519	AUG 22/08	17
520	DEC 22/04	17
521	DEC 22/04	16
522	AUG 22/05	17
523	AUG 22/08	17
524	DEC 22/04	17
525	DEC 22/04	17
526	APR 22/05	17
527	DEC 22/04	17
528	APR 22/05	17
529	APR 22/05	17
530	DEC 22/04	17
R 531	AUG 22/09	17.1
R 532	AUG 22/09	17.1
R 533	AUG 22/09	17.1
R 534	AUG 22/09	17.1
28-41-01	CONFIG 1	
401	DEC 22/01	16
402	DEC 22/01	16
403	AUG 22/99	17
404	APR 22/06	17
405	AUG 22/99	17
406	APR 22/04	17
407	APR 22/04	17
408	APR 22/04	17
409	APR 22/04	17
410	BLANK	
28-41-01	CONFIG 2	
401	DEC 22/01	16
402	AUG 22/05	19
403	AUG 22/99	17
404	APR 22/06	17
405	AUG 22/99	17
406	APR 22/04	17
407	APR 22/04	17
408	APR 22/04	17
409	APR 22/04	17
410	BLANK	
28-41-01		
701	AUG 10/93	01
702	AUG 10/93	01
28-41-02	CONFIG 1	
401	AUG 22/99	17
402	MAY 10/96	24
403	AUG 22/99	17
404	AUG 22/99	17
405	APR 22/04	17
406	AUG 22/99	17
407	AUG 22/01	17
408	AUG 22/99	17
28-41-02	CONFIG 2	
401	AUG 22/99	17
402	AUG 10/95	24
403	AUG 22/99	17
404	AUG 22/99	17
405	APR 22/04	17
406	APR 22/04	17
407	APR 22/04	17
408	AUG 22/99	17
28-41-03	CONFIG 1	
401	AUG 22/01	17
402	MAY 10/96	24
403	MAY 10/96	24
404	DEC 10/98	08
405	DEC 22/05	17
406	DEC 22/05	13
407	MAY 10/96	24
408	MAY 10/96	24
409	APR 22/07	15
410	AUG 22/05	16
411	APR 22/05	17
412	APR 22/07	15
413	APR 22/09	15
414	APR 22/09	15
415	MAY 10/96	24
416	APR 22/09	16
417	APR 22/07	15
418	APR 22/06	14
419	AUG 22/05	11
420	AUG 22/05	11
421	AUG 22/05	11
422	MAY 10/96	19
28-41-03	CONFIG 2	
401	APR 22/04	17
402	AUG 22/99	17
403	AUG 22/99	17
404	DEC 22/01	16
405	AUG 22/99	17
406	APR 22/04	17
407	AUG 22/99	17
408	AUG 22/01	17
409	DEC 22/01	16
410	BLANK	

BOEING PROPRIETARY - Copyright (C) - Unpublished Work - See title page for details.

Scandinavian Airlines System

PAGE	DATE	CODE
28-41-04		
401	DEC 22/06	02
402	DEC 22/01	01
403	DEC 22/06	02
404	DEC 22/06	02
28-41-06		
401	APR 22/05	01
402	DEC 22/01	06
403	APR 22/05	01
404	APR 22/05	01
405	APR 22/05	01
406	BLANK	
28-41-07		
401	APR 22/05	01
402	DEC 22/01	06
403	APR 22/05	01
404	APR 22/05	02
405	APR 22/05	02
406	BLANK	
28-41-08		
401	AUG 22/08	02
402	MAY 10/90	01
403	APR 10/98	01
404	AUG 22/08	03
R 405	AUG 22/09	02.1
406	MAY 10/90	01
28-41-09	CONFIG 1	
R 401	AUG 22/09	17.1
402	MAY 10/96	24
403	MAY 10/96	24
404	MAY 10/96	24
405	MAY 10/96	24
406	MAY 10/96	24
407	MAY 10/96	24
R 408	AUG 22/09	17.101
409	AUG 22/99	17
R 410	AUG 22/09	17.1
R 411	AUG 22/09	17.1
R 412	AUG 22/09	17.1
R 413	AUG 22/09	17.1
R 414	AUG 22/09	17.101
R 415	AUG 22/09	17.101
416	BLANK	
28-41-09	CONFIG 2	
R 401	AUG 22/09	16.1
402	APR 22/04	17
403	AUG 10/95	24
404	AUG 10/95	24
405	AUG 10/95	24
406	APR 22/09	17
407	AUG 10/95	24
408	AUG 10/95	24
409	AUG 10/95	24
410	AUG 22/99	17
28-41-09	CONFIG 2	CONT.
411	AUG 22/99	17
412	AUG 22/99	17
R 413	AUG 22/09	17.101
R 414	AUG 22/09	17.1
R 415	AUG 22/09	17.1
R 416	AUG 22/09	17.101
R 417	AUG 22/09	17.1
R 418	AUG 22/09	17.1
R 419	AUG 22/09	17.1
R 420	AUG 22/09	17.101
421	AUG 22/99	17
422	BLANK	
28-41-09		
R 601	AUG 22/09	01.1
602	DEC 22/07	11
603	DEC 22/07	11
604	DEC 22/07	04
605	DEC 22/07	04
606	DEC 22/08	01
R 607	AUG 22/09	01.1
608	BLANK	
28-41-24		
201	APR 22/06	01
202	APR 22/06	01
28-41-24		
401	APR 22/06	01
402	APR 22/06	01
R 403	AUG 22/09	01.1
R 404	AUG 22/09	01.1
28-41-24		
601	AUG 22/08	01
602	AUG 22/07	01
603	DEC 22/07	01
604	BLANK	
28-42-00		
1	AUG 22/00	17
2	FEB 10/94	19
3	DEC 22/01	01
4	DEC 22/01	01
5	FEB 10/94	08
6	BLANK	
28-42-00		
101	FEB 10/94	07
102	FEB 10/94	16
103	FEB 10/91	02
104	BLANK	
28-42-01		
401	AUG 22/04	19
402	DEC 22/01	22
403	DEC 22/01	16
404	DEC 22/04	18
28-42-01		CONT.
405	DEC 22/01	03
406	AUG 22/00	16
407	AUG 22/03	02
408	APR 22/05	04
409	APR 22/03	09
410	BLANK	
28-43-00	CONFIG 1	
1	MAY 10/96	24
2	MAY 10/96	24
28-43-00	CONFIG 2	
1	AUG 10/95	24
2	AUG 10/95	24
28-43-00	CONFIG 1	
101	DEC 10/98	16
102	DEC 10/98	16
103	DEC 22/01	16
104	BLANK	
28-43-00	CONFIG 2	
101	AUG 22/01	18
102	AUG 10/95	24
103	DEC 22/01	16
104	BLANK	
28-43-00	CONFIG 1	
501	MAY 10/96	24
502	MAY 10/96	24
503	MAY 10/96	24
504	AUG 22/01	17
505	MAY 10/96	15
506	AUG 22/01	17
28-43-00	CONFIG 2	
501	AUG 22/01	17
502	AUG 10/96	15
503	AUG 22/01	17
504	AUG 22/01	17
505	MAY 10/96	15
506	AUG 22/01	17
28-43-01	CONFIG 1	
401	MAY 10/96	10
402	AUG 22/01	17
403	MAY 10/96	24
404	BLANK	
28-43-01	CONFIG 2	
401	AUG 22/01	17
402	AUG 22/01	17
403	AUG 22/01	17
404	BLANK	

BOEING PROPRIETARY - Copyright (C) - Unpublished Work - See title page for details.

Scandinavian Airlines System

PAGE	DATE	CODE	PAGE	DATE	CODE	PAGE	DATE	CODE
28-44-00								
1	NOV 10/89	01						
2	NOV 10/92	13						
3	APR 22/01	02						
4	BLANK							
28-44-00								
101	NOV 10/97	01						
102	NOV 10/97	14						
103	NOV 10/97	01						
104	BLANK							
28-44-00								
201	MAY 10/90	01A						
202	MAY 10/90	01A						
203	MAY 10/90	01A						
204	MAY 10/90	01A						
205	MAY 10/90	01A						
206	MAY 10/90	01A						
207	MAY 10/90	01A						
208	AUG 22/01	01A						
209	AUG 22/01	01A						
210	AUG 22/01	01A						
211	AUG 22/99	01A						
212	APR 22/01	05A						
213	APR 22/04	05A						
214	APR 22/04	04A						
215	FEB 10/92	03A						
216	BLANK							
28-44-01								
401	NOV 10/97	01						
402	MAY 10/90	01						
403	MAY 10/90	01						
404	FEB 10/95	01						
405	APR 22/04	01						
406	APR 22/04	01						
407	APR 22/04	01						
408	APR 22/04	01						
409	AUG 22/05	01						
410	AUG 22/05	01						
411	APR 22/04	01						
412	AUG 22/05	01						
413	AUG 22/05	01						
414	AUG 22/05	01						

BOEING PROPRIETARY - Copyright (C) - Unpublished Work - See title page for details.

CHAPTER 28 - FUEL

TABLE OF CONTENTS

Subject	Chapter Section Subject	Page	Effectivity
FUEL SYSTEM	28-00-00		
Description and Operation		1	ALL
General		1	
Defueling		1	
Engine Fuel-Feed System		1	
Fuel Configuration Light		5	
Fuel Jettison		5	
Fuel Tanks		1	
Pressure Fueling System		1	
Quantity Measurement		5	
Venting		1	
Maintenance Practices		201	ALL

BOEING PROPRIETARY - Copyright (C) - Unpublished Work - See title page for details.

CHAPTER 28 - FUEL

TABLE OF CONTENTS

Subject	Chapter Section Subject	Page	Effectivity
DDG Maintenance Procedures		901	ALL
28-11-1 Preparation Procedure Sump Drain Valves Inoperative		902	
28-11-1 Restoration Procedure Sump Drain Valves Inoperative		902	
28-21-1 Preparation Procedure Pressure Fueling System Inoperative		903	
28-21-1 Restoration Procedure Pressure Fueling System Inoperative		904	
28-21-2 Preparation Procedure Fueling Receptacle Cap Inoperative		905	
28-21-2 Restoration Procedure Fueling Receptacle Cap Inoperative		906	
28-22-2 Preparation Procedure Center Tank Fuel Pumps Inoperative		910	
28-22-2 Restoration Procedure Center Tank Fuel Pumps Inoperative		910	
28-22-3 Preparation Procedure Dual Fuel Crossfeed Valve Inoperative		911	
28-22-3 Restoration Procedure Dual Fuel Crossfeed Valve Inoperative		914	
28-25-2 Preparation Procedure APU Fuel Shutoff Valve Inoperative		916	
28-25-2 Restoration Procedure APU Fuel Shutoff Valve Inoperative		918	
28-25-3 Preparation Procedure APU Fuel Isolation Valve Inoperative		919	
28-25-3 Restoration Procedure APU Fuel Isolation Valve Inoperative		920	
28-26-1 Preparation Procedure Defuel Valves Inoperative		921	

BOEING PROPRIETARY - Copyright (C) - Unpublished Work - See title page for details.

CHAPTER 28 - FUEL

TABLE OF CONTENTS

Subject	Chapter Section Subject	Page	Effectivity
28-26-1 Restoration Procedure Defuel Valves Inoperative		924	
28-31-3 Preparation Procedure Fuel Jettison System Inoperative		927	
28-31-3 Restoration Procedure Fuel Jettison System Inoperative		929	
28-40-1 Preparation Procedure Crossfeed Valve Lights Inoperative		931	
28-40-1 Restoration Procedure Crossfeed Valve Lights Inoperative		933	
28-40-2 Preparation Procedure Spar Valve Lights Inoperative		934	
28-40-2 Restoration Procedure Spar Valve Lights Inoperative		937	
28-41-1 Preparation Procedure Fuel Tank Quantity Indication System (Flight Deck) Inoperative		939	
28-41-1 Restoration Procedure Fuel Tank Quantity Indication System (Flight Deck) Inoperative		943	
28-41-2 Preparation Procedure Fuel Quantity Processor Channels Inoperative		945	
28-41-2 Restoration Procedure Fuel Quantity Processor Channels Inoperative		949	
28-41-6 Preparation Procedure Fuel Quantity Indications (Fueling Panel) Inoperative		950	
28-41-6 Restoration Procedure Fuel Quantity Indications (Fueling Panel) Inoperative		952	
28-42-1 Preparation Procedure Fuel Pump Low PRESS Lights Inoperative		954	

BOEING PROPRIETARY - Copyright (C) - Unpublished Work - See title page for details.

CHAPTER 28 - FUEL

TABLE OF CONTENTS

Subject	Chapter Section Subject	Page	Effectivity
28-42-1 Restoration Procedure Fuel Pump Low PRESS Lights Inoperative		956	
STORAGE	28-10-00		
Maintenance Practices		201	ALL
Biocide Treatment - Metered Injection Cart		211	
Biocide Treatment - Overwing Fill Ports		220	
Detection Test for Microbial Growth		201	
Microbial Growth Removal - Manual Removal Method		226	
Microbial Growth Removal - Pressure Washer Method		229	
Treatment of Tanks Contaminated With Microbial Growth		207	
FUEL TANKS	28-11-00		
Description and Operation		1	ALL
General		1	
Component Details		3	
Fuel Dam Baffle Ribs		6	
Fuel Tank Baffle Door		7	
Overwing Fill Ports		5	
Sump Drain Valves		5	
Tank Access Doors		3	
Component Location		101	ALL
Component Index			
Component Location			
Maintenance Practices		201	ALL
Inspection/Check		601	ALL
Cleaning/Painting		701	ALL
Approved Repairs		801	ALL
DOOR - AUXILIARY TANK ACCESS	28-11-02		
Removal/Installation		401	ALL
DOOR - ENGINE DRY BAY ACCESS	28-11-06		
Removal/Installation		401	ALL
DOOR - FUEL TANK BAFFLE	28-11-07		
Removal/Installation		401	ALL
DOOR - MAIN TANK ACCESS	28-11-01		
Removal/Installation		401	ALL

BOEING PROPRIETARY - Copyright (C) - Unpublished Work - See title page for details.

CHAPTER 28 - FUEL

TABLE OF CONTENTS

Subject	Chapter Section Subject	Page	Effectivity
DOOR - SURGE TANK ACCESS	28-11-03		
Removal/Installation		401	ALL
DOORS - FUEL TANK ACCESS	28-11-10		
Approved Repairs		801	ALL
DRAIN TUBE - SLAT TRACK	28-11-11		
Removal/Installation		401	ALL
PORT - OVERWING FILL	28-11-04		
Removal/Installation		401	ALL
Inspection/Check		601	ALL
VALVE - FUEL SUMP DRAIN	28-11-05		
Removal/Installation		401	ALL
FUEL VENT SYSTEM	28-13-00		
Description and Operation		1	ALL
General		1	
Component Details		3	
Float Drain Valve		4	
Fuel Vent Float Valve		3	
Fuel Vent Float Valve		4	
Pressure Relief Valve		5	
Surge Tank Drain Check Valve		5	
Vent Flame Arrestor		5	
Component Location		101	ALL
Component Index			
Component Location			
ARRESTOR - SURGE TANK VENT FLAME	28-13-05		
Removal/Installation		401	ALL
LINE - SURGE TANK DRAIN	28-13-07		
Inspection/Check		601	ALL
VALVE - FUEL VENT FLOAT	28-13-01		
Removal/Installation		401	ALL
VALVE - FUEL VENT FLOAT DRAIN	28-13-03		
Removal/Installation		401	ALL
VALVE - SURGE TANK DRAIN CHECK	28-13-06		
Removal/Installation		401	ALL
VALVE - SURGE TANK PRESSURE RELIEF	28-13-04		
Maintenance Practices		201	ALL
Inspection/Check		601	ALL
DISTRIBUTION	28-20-00		

BOEING PROPRIETARY - Copyright (C) - Unpublished Work - See title page for details.

CHAPTER 28 - FUEL

TABLE OF CONTENTS

Subject	Chapter Section Subject	Page	Effectivity
PRESSURE FUELING SYSTEM	28-21-00		
Description and Operation		1	ALL
General		1	
Component Details		5	
Drain Check Valves and Vacuum Valve for the Fueling Manifold		8	
Fueling Adapter		5	
Fueling Control Panel		10	
Fueling Shutoff Valve Assembly		5	
Fueling Station		10	
Fueling Swing Check Valves		9	
Pressure Relief Valve for the Fueling Manifold		13	
Operation		13	
Control		20	
Functional Description		13	
Overfill Sensor System		20	
Component Location		101	ALL
Component Index			
Component Location			
Adjustment/Test		501	ALL
Inspection/Check		601	ALL
ASSEMBLY - FUELING ADAPTER AND POPPET	28-21-01		
Removal/Installation		401	ALL
Inspection/Check		601	ALL
CARD - SURGE TANK FUEL LEVEL SENSOR CONTROL	28-21-04		
Removal/Installation		401	ALL
COUPLINGS - FUELING MANIFOLD AND	28-21-10		
Removal/Installation		401	ALL
HARNESS - SURGE TANK SENSOR	28-21-11		
Removal/Installation		401	ALL
PANEL - FUELING CONTROL	28-21-13		
Removal/Installation		401	ALL
Adjustment/Test		501	ALL
SENSOR - SURGE TANK FUEL LEVEL	28-21-03		
Removal/Installation		401	ALL
SWITCH - FUELING POWER CONTROL	28-21-09		
Removal/Installation		401	ALL

BOEING PROPRIETARY - Copyright (C) - Unpublished Work - See title page for details.

CHAPTER 28 - FUEL

TABLE OF CONTENTS

Subject	Chapter Section Subject	Page	Effectivity
UNIT - FUELING SHUTOFF VALVE CONTROL	28-21-12		
Removal/Installation		401	ALL
Inspection/Check		601	ALL
VALVE - FUELING MANIFOLD DRAIN CHECK	28-21-05		
Removal/Installation		401	ALL
VALVE - FUELING MANIFOLD PRESSURE RELIEF	28-21-08		
Removal/Installation		401	ALL
VALVE - FUELING MANIFOLD VACUUM	28-21-07		
Removal/Installation		401	ALL
VALVE - FUELING SHUTOFF	28-21-02		
Removal/Installation		401	ALL
VALVE - SWING CHECK	28-21-06		
Removal/Installation		401	ALL
ENGINE FUEL FEED SYSTEM	28-22-00		
Description and Operation		1	ALL
General		1	
Component Details		1	
Automatic Sumping Jet Pumps		18	
Boost Pump Bypass Valve		6	
Boost Pump Unit Operation		9	
Boost Pump Vapor Vent Valve		9	
Boost Pump Vapor Vent Valve		13	
Discharge Check Valve		13	
Discharge Check Valve Module		9	
Engine Fuel Shutoff Valve and Engine Fuel Crossfeed Valve		1	
Float-Operated Shutoff Valve		19	
Fuel Boost Pump Assembly		6	
Fuel Boost Pumps		9	
Jet Pump Operation		19	
Motive Flow Screen and Valve		13	
Motive Flow Screen Module		9	
Override Pump		11	
Override Pump Unit		13	
Override Pump Unit Operation		15	
Override/Jettison Pump		13	
Operation		19	
Control		33	
Functional Description		19	

BOEING PROPRIETARY - Copyright (C) - Unpublished Work - See title page for details.

CHAPTER 28 - FUEL

TABLE OF CONTENTS

Subject	Chapter Section Subject	Page	Effectivity
Component Location		101	ALL
Component Index			
Component Location			
Adjustment/Test		501	ALL
ACTUATOR - ENGINE FUEL CROSSFEED VALVE	28-22-12		
Removal/Installation		401	ALL
Inspection/Check		601	ALL
ACTUATOR - ENGINE FUEL SHUTOFF VALVE	28-22-11		
Removal/Installation		401	ALL
Inspection/Check		601	ALL
CONDUIT - BOOST, OVERRIDE/JETTISON PUMP	28-22-15		
Removal/Installation		401	ALL
LINE - FUEL, ENGINE FUEL FEED SYSTEM	28-22-07		
Removal/Installation		401	ALL
Inspection/Check		601	ALL
PANEL - FUEL MANAGEMENT CONTROL	28-22-17		
Removal/Installation		401	ALL
PUMP - AUTOMATIC SUMPING JET	28-22-06		
Removal/Installation		401	ALL
PUMP - CENTER AUXILIARY TANK OVERRIDE	28-22-05		
Removal/Installation		401	CONFIG 1 [*]
[*] SAS 050, 051, 162-164 PRE-SB 28-25; SAS 150, 152-154 PRE-SB 28-27; MTH 275 PRE-SB 28-27; MTH 276			
Inspection/Check		601	CONFIG 1 [*]
[*] SAS 050, 051, 162-164 PRE-SB 28-25; SAS 150, 152-154 PRE-SB 28-27; MTH 275 PRE-SB 28-27; MTH 276			
PUMP - MAIN TANK FUEL BOOST	28-22-03		
Removal/Installation		401	ALL
Inspection/Check		601	ALL
PUMP - OVERRIDE/JETTISON	28-22-05		
Removal/Installation		401	CONFIG 2 [*]
[*] SAS 050, 051, 162-164 POST-SB 28-25; SAS 150, 152-154 POST-SB 28-27; SAS 052-149, 155-161, 165-999; MTH 275 POST-SB 28-27; MTH 277-999			

BOEING PROPRIETARY - Copyright (C) - Unpublished Work - See title page for details.

CHAPTER 28 - FUEL

TABLE OF CONTENTS

Subject	Chapter Section Subject	Page	Effectivity
Inspection/Check		601	CONFIG 2 [*]
[*] SAS 050, 051, 162-164 POST-SB 28-25; SAS 150, 152-154 POST-SB 28-27; SAS 052-149, 155-161, 165-999; MTH 275 POST-SB 28-27; MTH 277-999			
PUMP - SCAVENGE JET	28-22-13		
Removal/Installation		401	ALL
SCREEN - MOTIVE FLOW	28-22-08		
Cleaning/Painting		701	ALL
SHAFT - ENGINE FUEL CROSSFEED VALVE AND ADAPTER/	28-22-02		
Removal/Installation		401	ALL
VALVE - BOOST PUMP VAPOR VENT	28-22-09		
Removal/Installation		401	ALL
VALVE - ENGINE FUEL SHUTOFF	28-22-01		
Removal/Installation		401	ALL
VALVE - FLOAT-OPERATED SHUTOFF	28-22-10		
Removal/Installation		401	ALL
VALVE - MAIN TANK FUEL BOOST PUMP BYPASS	28-22-04		
Removal/Installation		401	ALL
WIRING - BOOST, OVERRIDE/JETTISON PUMP	28-22-15		
Inspection/Check		601	ALL
APU FUEL FEED SYSTEM	28-25-00		
Description and Operation		1	ALL
General		1	
Component Details		3	
APU DC Fuel Pump		3	
APU Fuel Shutoff Valve and APU Fuel Isolation Valve		4	
Operation		5	
Functional Description		5	
Component Location		101	ALL
Component Index			
Component Location			
Maintenance Practices		201	ALL
Adjustment/Test		501	ALL
PUMP - APU DC FUEL	28-25-01		
Removal/Installation		401	ALL
Inspection/Check		601	ALL

BOEING PROPRIETARY - Copyright (C) - Unpublished Work - See title page for details.

CHAPTER 28 - FUEL

TABLE OF CONTENTS

Subject	Chapter Section Subject	Page	Effectivity
SHROUD - APU FUEL SUPPLY LINE AND	28-25-05		
Removal/Installation		401	ALL
SWITCH - APU FUEL PUMP PRESSURE	28-25-03		
Removal/Installation		401	ALL
VALVE - APU FUEL ISOLATION	28-25-04		
Removal/Installation		401	[*]
[*] SAS 050, 051, 150-167 PRE-SB 28-34; MTH 275-280 PRE-SB 28-34			
Inspection/Check		601	[*]
[*] SAS 050, 051, 150-167 PRE-SB 28-34; MTH 275-280 PRE-SB 28-34			
VALVE - APU FUEL SHUTOFF	28-25-02		
Removal/Installation		401	ALL
Inspection/Check		601	ALL
DEFUELING	28-26-00		
Description and Operation		1	ALL
General		1	
Component Details		1	
Defueling Valve		1	
Operation		6	
Control		8	
Functional Description		6	
Component Location		101	ALL
Component Index			
Component Location			
Maintenance Practices		201	ALL
ACTUATOR - DEFUELING VALVE	28-26-11		
Removal/Installation		401	ALL
Inspection/Check		601	ALL
VALVE - DEFUELING	28-26-01		
Removal/Installation		401	ALL
DUMP	28-30-00		

BOEING PROPRIETARY - Copyright (C) - Unpublished Work - See title page for details.

CHAPTER 28 - FUEL

TABLE OF CONTENTS

Subject	Chapter Section Subject	Page	Effectivity
FUEL JETTISON SYSTEM	28-31-00		
Description and Operation		1	[*]
General		1	
Fuel Jettison Control Module		18	
Fuel Jettison Manifold		1	
Fuel Jettison Nozzle		1	
Fuel Jettison Nozzle Valve		1	
Fuel Jettison Nozzle Valve Switch		15	
Fuel Jettison Switch		18	
Fuel Jettison Transfer Valve		16	
Jettison Indication Relay		18	
Jettison Pump Control Relay		16	
Jettison Pump Indication Relay		16	
Pressure Switches of the Override/Jettison Pump		16	
[*] MTH 275 POST-SB 28-27, AND MTH 276-999; SAS 150, 152-154 POST-SB 28-27; SAS 050-149, 155-999			
Component Location		101	[*]
Component Index			
Component Location			
[*] MTH 275 POST-SB 28-27; MTH 276-999; SAS 150, 152-154 POST-SB 28-27; SAS 050-149, 155-999			
Adjustment/Test		501	CONFIG 1 [*]
[*] SAS 155-157 165-167 PRE-SB 28-38; SAS 050-051, 162-164 PRE-SB 28-25			
Adjustment/Test		501	CONFIG 2 [*]
[*] LIMITED - SEE TOP OF FIRST PAGE.			
ACTUATOR - FUEL JETTISON NOZZLE VALVE	28-31-05		
Removal/Installation		401	[*]
[*] SAS 150, 152-154 POST-SB 28-27; SAS 050-149, 155-999; MTH 275 POST-SB 28-27; MTH 277-999			
Inspection/Check		601	[*]
[*] SAS 150, 152-154 POST-SB 28-27; SAS 050-149, 155-999; MTH 275 POST-SB 28-27; MTH 277-999			

BOEING PROPRIETARY - Copyright (C) - Unpublished Work - See title page for details.

CHAPTER 28 - FUEL

TABLE OF CONTENTS

Subject	Chapter Section Subject	Page	Effectivity
ACTUATOR - FUEL JETTISON TRANSFER VALVE	28-31-04		
Removal/Installation		401	[*]
[*] SAS 150, 152-154 POST-SB 28-27; SAS 050-149, 155-999; MTH 275 POST-SB 28-27; MTH 277-999			
Inspection/Check		601	[*]
[*] SAS 150, 152-154 POST-SB 28-27; SAS 050-149, 155-999; MTH 275 POST-SB 28-27; MTH 277-999			
FUEL JETTISON NOZZLE VALVE	28-31-03		
Inspection/Check		601	[*]
[*] SAS 150, 152-154 POST-SB 28-27; SAS 050-149, 155-999; MTH 275 POST-SB 28-27; MTH 277-999			
MODULE - FUEL JETTISON CONTROL	28-31-08		
Removal/Installation		401	[*]
[*] SAS 150, 152-154 POST-SB 28-27; SAS 050-149, 155-999; MTH 275 POST-SB 28-27; MTH 277-999			
PUMP - JETTISON	28-31-01		
Removal/Installation		401	[*]
[*] SAS 150, 152-154 POST-SB 28-27; SAS 050, 051, 162-164 POST-SB 28-25; SAS 052-149, 155-161, 165-999; MTH 275 POST-SB 28-27; MTH 277-999			
Inspection/Check		601	[*]
[*] SAS 150, 152-154 POST-SB 28-27; SAS 050, 051, 162-164 POST-SB 28-25; SAS 052-149, 155-161, 165-999; MTH 275 POST-SB 28-27; MTH 277-999			
VALVE - FUEL JETTISON NOZZLE	28-31-03		
Removal/Installation		401	[*]
[*] SAS 150, 152-154 POST-SB 28-27; SAS 050-149, 155-999; MTH 275 POST-SB 28-27; MTH 277-999			
VALVE - FUEL JETTISON TRANSFER	28-31-06		
Removal/Installation		401	[*]
[*] SAS 150, 152-154 POST-SB 28-27; SAS 050-149, 155-999; MTH 277-999			
INDICATING	28-40-00		

BOEING PROPRIETARY - Copyright (C) - Unpublished Work - See title page for details.

CHAPTER 28 - FUEL

TABLE OF CONTENTS

Subject	Chapter Section Subject	Page	Effectivity
FUEL QUANTITY INDICATING SYSTEM	28-41-00		
Description and Operation		1	CONFIG 1 [*]
General		1	
Component Details		4	
Compensator		5	
Densitometer		6	
Electronics Unit for the Densitometer		6	
Emitter for the Densitometer		9	
Fuel Collection Shroud		11	
Fuel Quantity Indicator		11	
Fuel Quantity Processor Unit		15	
FUEL QTY Test Switch		11	
Load Select Control		15	
Load Select Indicator		15	
Tank Units		4	
Tank Wiring Harness		23	
Operation		32	
Functional Description		32	
FQIS Accuracy Data		37	
[*] SAS 050, 051, 151-157, 162-167; MTH 275-278, 280			
Description and Operation		1	CONFIG 2 [*]
General		1	
Component Details		4	
Compensator		4	
Densitometer		4	
Fuel Quantity Indicator		6	
FQIS Processor		12	
FUEL QTY Test Switch		9	
Load Select Control		12	
Load Select Indicator		10	
Tank Units		4	
Tank Wiring Harness		16	
Operation		26	
Functional Description		26	
[*] SAS 052-149, 158-161, 168-999; MTH 281-999			

BOEING PROPRIETARY - Copyright (C) - Unpublished Work - See title page for details.

CHAPTER 28 - FUEL

TABLE OF CONTENTS

Subject	Chapter Section Subject	Page	Effectivity
Component Location		101	CONFIG 1 [*]
Component Index			
Component Location			
[*] SAS 050, 051, 151-157, 162-167; MTH 275-278, 280			
Component Location		101	CONFIG 2 [*]
Component Index			
Component Location			
[*] SAS 052-149, 158-161, 168-999; MTH 281-999			
Adjustment/Test		501	CONFIG 1 [*]
[*] SAS 050, 051, 151-157, 162-167; MTH 275-278, 280			
Adjustment/Test		501	CONFIG 2 [*]
Insulation Resistance Test		521	
[*] SAS 052-149, 158-161, 168-999; MTH 281-999			
COMPENSATOR - FQIS	28-41-02		
Removal/Installation		401	CONFIG 1 [*]
[*] SAS 050, 051, 151-157, 162-167; MTH 275-278, 280			
Removal/Installation		401	CONFIG 2 [*]
[*] SAS 052-149, 158-161, 168-999; MTH 281-999			
CONTROL - FQIS LOAD SELECT	28-41-07		
Removal/Installation		401	ALL
DENSITOMETER - FQIS	28-41-03		
Removal/Installation		401	CONFIG 1 [*]
[*] SAS 050, 051, 151-157, 162-167; MTH 275-278, 280			
Removal/Installation		401	CONFIG 2 [*]
[*] SAS 052-149, 158-161, 168-999; MTH 281-999			
HARNESS - FQIS TANK WIRING	28-41-09		
Removal/Installation		401	CONFIG 1 [*]
[*] SAS 050, 051, 151-157, 162-167; MTH 275-278, 280			
Removal/Installation		401	CONFIG 2 [*]
[*] SAS 052-149, 158-161, 168-999; MTH 281-999			
Inspection/Check		601	ALL

BOEING PROPRIETARY - Copyright (C) - Unpublished Work - See title page for details.

CHAPTER 28 - FUEL

TABLE OF CONTENTS

Subject	Chapter Section Subject	Page	Effectivity
INDICATOR - FQIS LOAD SELECT	28-41-06		
Removal/Installation		401	ALL
INDICATOR - FUEL QUANTITY	28-41-04		
Removal/Installation		401	ALL
PROTECTOR - DENSITOMETER HOT SHORT	28-41-24		
Maintenance Practices		201	[*]
[*] AIRPLANES WITH DENSITOMETER HOT SHORT PROTECTOR (POST-SB 28A0094, PRR B13421-8)			
Removal/Installation		401	[*]
[*] AIRPLANES WITH DENSITOMETER HOT SHORT PROTECTOR (POST-SB 28A0094, PRR B13421-8)			
Inspection/Check		601	[*]
[*] AIRPLANES WITH DENSITOMETER HOT SHORT PROTECTOR (POST-SB28A0094, PRR B13421-8)			
UNIT - FQIS PROCESSOR	28-41-08		
Removal/Installation		401	ALL
UNIT - FQIS TANK	28-41-01		
Removal/Installation		401	CONFIG 1 [*]
[*] SAS 050, 051, 151-157, 162-167; MTH 275-278, 280			
Removal/Installation		401	CONFIG 2 [*]
[*] SAS 052-149, 158-161, 168-999; MTH 281-999			
Cleaning/Painting		701	ALL
General		701	
FUEL PRESSURE INDICATING SYSTEM	28-42-00		
Description and Operation		1	ALL
General		1	
Operation		1	
Engine Fuel Low Pressure		1	
Low Pressure Indication for the Boost Pumps and the Override Pumps		1	
Component Location		101	ALL
Component Index			
Component Location			
SWITCH - PRESSURE	28-42-01		
Removal/Installation		401	ALL

BOEING PROPRIETARY - Copyright (C) - Unpublished Work - See title page for details.

CHAPTER 28 - FUEL

TABLE OF CONTENTS

Subject	Chapter Section Subject	Page	Effectivity
FUEL TEMPERATURE INDICATING SYSTEM	28-43-00		
Description and Operation		1	CONFIG 1 [*]
General		1	
Component Details		1	
Fuel Temperature Indicator		1	
Fuel Temperature Sensor		1	
Operation		1	
[*] SAS 050, 051, 151-157, 162-167; MTH 275-278, 280			
Description and Operation		1	CONFIG 2 [*]
General		1	
Component Details		1	
Fuel Temperature Indicator		1	
Fuel Temperature Sensor		1	
Operation		1	
[*] SAS 052-149, 158-161, 168-999; MTH 281-999			
Component Location		101	CONFIG 1 [*]
Component Index			
Component Location			
[*] SAS 050, 051, 151-157, 162-167; MTH 275-278, 280			
Component Location		101	CONFIG 2 [*]
Component Index			
Component Location			
[*] SAS 052-149, 158-161, 168-999; MTH 281-999			
Adjustment/Test		501	CONFIG 1 [*]
[*] SAS 050, 051, 151-157, 162-167; MTH 275-278, 280			
Adjustment/Test		501	CONFIG 2 [*]
[*] SAS 052-149, 158-161, 168-999; MTH 281-999			
SENSOR - FUEL TEMPERATURE	28-43-01		
Removal/Installation		401	CONFIG 1 [*]
[*] SAS 050, 051, 151-157, 162-167; MTH 275-278, 280			
Removal/Installation		401	CONFIG 2 [*]
[*] SAS 052-149, 158-161, 168-999; MTH 281-999			

BOEING PROPRIETARY - Copyright (C) - Unpublished Work - See title page for details.

CHAPTER 28 - FUEL

TABLE OF CONTENTS

Subject	Chapter Section Subject	Page	Effectivity
FUEL MEASURING STICKS	28-44-00		
Description and Operation		1	ALL
General		1	
Component Details		1	
Fuel Measuring Sticks		1	
Component Location		101	ALL
Component Index			
Component Location			
Maintenance Practices		201	ALL
STICKS - FUEL QUANTITY MEASURING	28-44-01		
Removal/Installation		401	ALL

BOEING PROPRIETARY - Copyright (C) - Unpublished Work - See title page for details.

FUEL - DESCRIPTION AND OPERATION

1. General (Fig. 1)
   A. The airplane fuel system supplies a means for storing fuel and distributing fuel to the engines and the auxiliary power unit (APU). The fuel system also includes means for pressure fueling and defueling and for measuring fuel quantity.
   B. Fuel Tanks
      (1) Three fuel tanks (AMM 28-11-00/001), two main fuel tanks and one auxiliary fuel tank, store fuel for the engine and APU. A surge tank in each wingtip supplies main tank overflow containment. Overwing fill ports for each main fuel tank permit gravity feed fueling (AMM 28-21-00/001).
   C. Venting
      (1) The fuel vent system (AMM 28-13-00/001) channels fuel fumes from each fuel tank to the surge tanks to prevent collection of fumes. The surge tanks vent externally through a vent scoop. Backup venting is supplied by a two-way pressure relief valve in each surge tank. While venting the fuel tanks, the fuel vent system prevents fuel from entering the vent channels. A flame arrestor also prevents all external flames from entering the surge tank.
   D. Pressure Fueling System
      (1) The pressure fueling system (AMM 28-21-00/001) supplies automatic and manual fueling capability. The fuel quantity indicating system processor (FQIS processor) (AMM 28-41-00/001) controls the automatic fueling. The fueling modes are set at the fueling control panel.
   E. Engine Fuel-Feed System
      (1) The engine fuel-feed system distributes fuel to the main engines (AMM 28-22-00/001) and the APU (AMM 28-25-00/001). The fuel boost pumps in the main tank normally supply fuel to the engines and the APU. An APU DC fuel pump supplies a backup fuel-feed to the APU if the fuel boost pumps stop or lose AC power. A crossfeed system furnishes fuel through an engine fuel crossfeed valve from either main fuel tank to the opposite engine. The fuel management panel, on the overhead panel, P5, has the controls for the engine fuel-feed system.
   F. Defueling
      (1) Defueling valves supply a connection between the engine fuel-feed manifold and the fueling manifold to permit defueling at the fueling station (AMM 28-26-00/001). Defueling methods include pressure defueling, suction defueling, and tank-to-tank transfer.

BOEING PROPRIETARY - Copyright (C) - Unpublished Work - See title page for details.

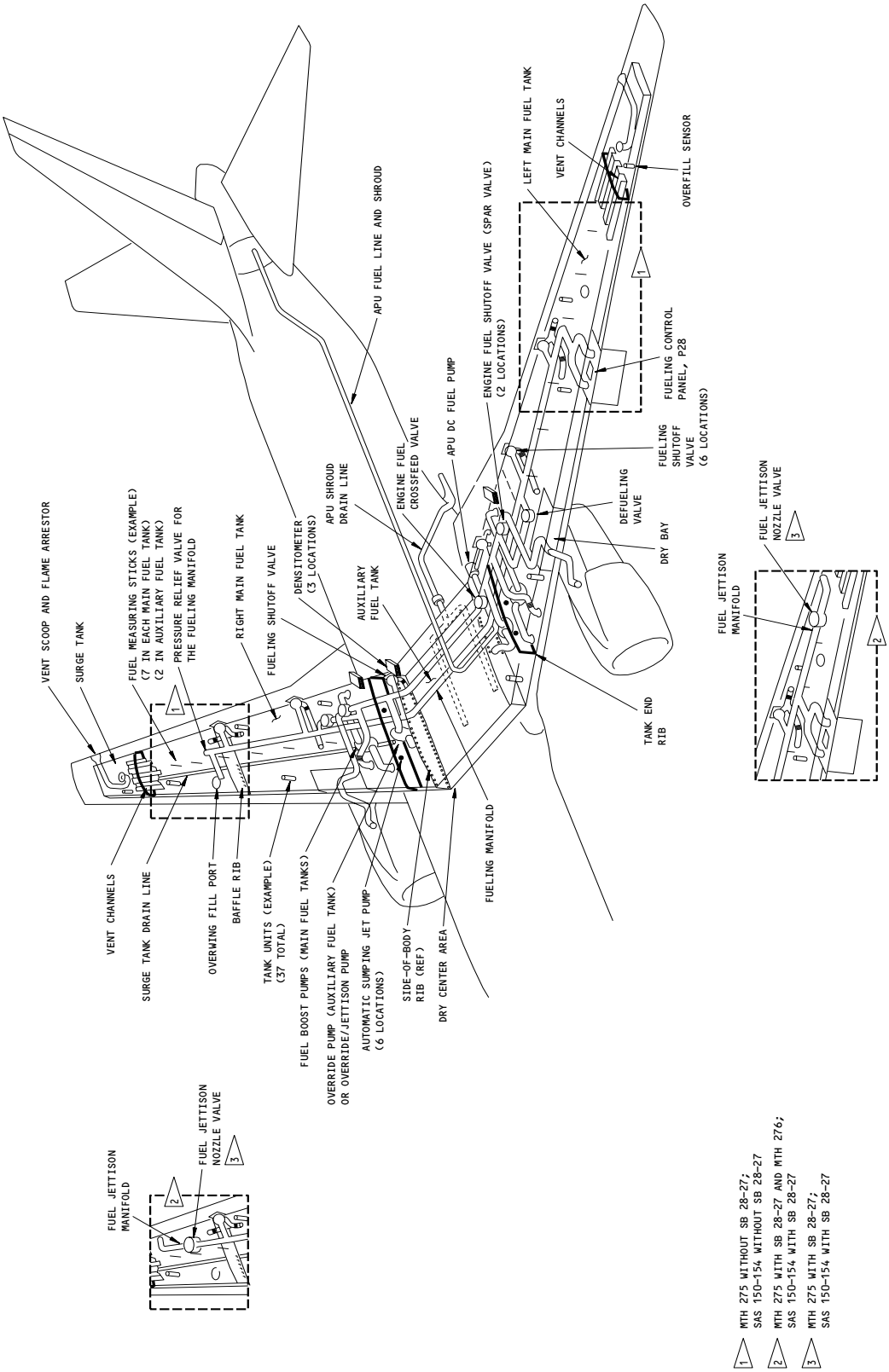

Fuel System
Figure 1 (Sheet 1)

BOEING PROPRIETARY - Copyright (C) - Unpublished Work - See title page for details.

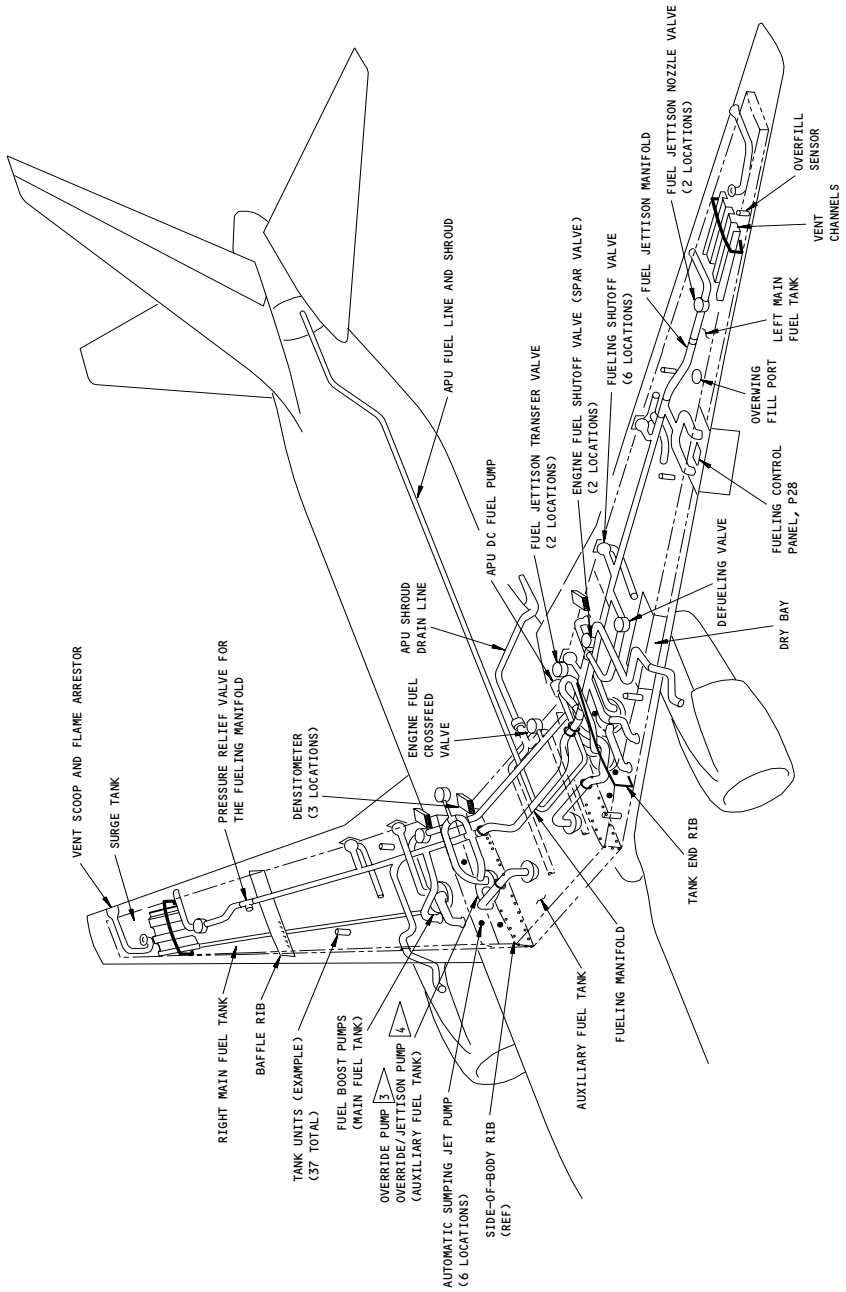

Fuel System
Figure 1 (Sheet 2)

3 SAS 050, 051, 162-164
4 SAS 052-149, 155-161, 165-999; MTH 277-999

752812

BOEING PROPRIETARY - Copyright (C) - Unpublished Work - See title page for details.

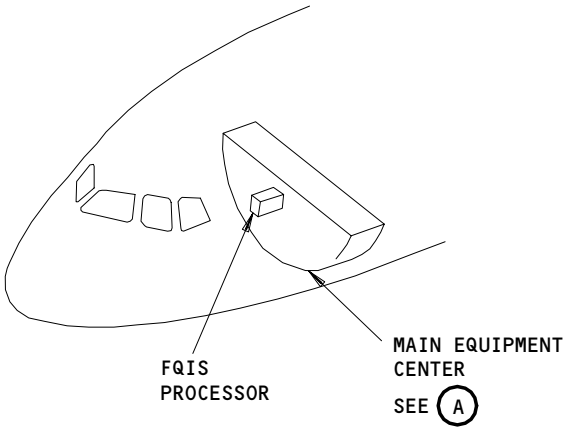

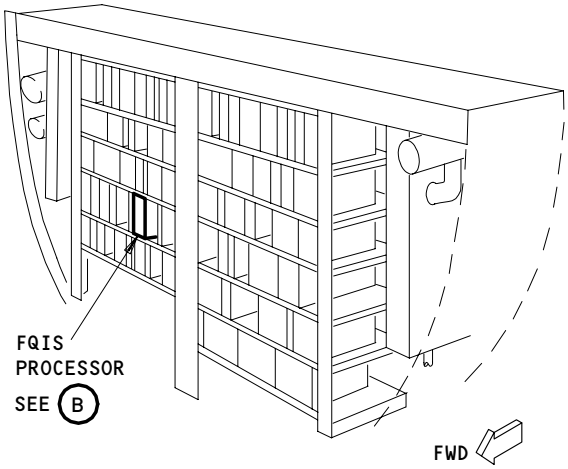

MAIN EQUIPMENT CENTER

A

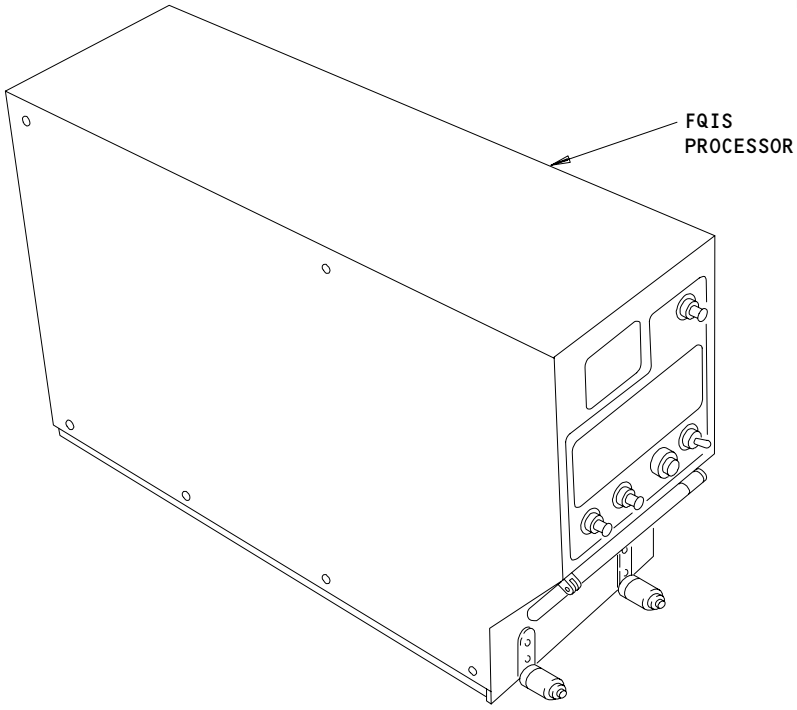

FQIS PROCESSOR

B

Fuel System Control
Figure 2

BOEING PROPRIETARY - Copyright (C) - Unpublished Work - See title page for details.

G. SAS 150-154 POST-SB 28-27;
SAS 050-149, 155-999;
MTH 277-999;
Fuel Jettison
(1) The fuel jettison system lets fuel be discarded during an inflight emergency to decrease the weight of the airplane to a permitted landing weight (AMM 28-31-00/001).
(2) The fuel jettison control module, on the overhead panel, P5, has the controls for the fuel jettison system.
(3) The override pumps (Ref 28-22-00/001) pump fuel out of the auxiliary fuel tanks through the fuel jettison manifold.
(4) The fuel jettison transfer valves and nozzle valves control the flow of fuel.

H. Quantity Measurement
(1) The FQIS processor (AMM 28-41-00/001) processes the input signals from all the components measuring fuel quantity (Fig. 2). The FQIS processor also sends signals to the fuel quantity indicators (AMM 28-41-00/001) and fueling shut off valves (AMM 28-21-00/001). Signals are supplied by tank units proportional to fuel level, compensators to fuel dielectric constant, and densitometers to fuel density. The FQIS processor reads the inputs and computes fuel quantity. It then sends signals to the fuel quantity indicators on the fueling control panel and the overhead panel. The indicators show the fuel in each fuel tank and the total fuel for all fuel tanks. From input signals, the FQIS processor controls the position of the fueling shutoff valves. This ensures correct fuel quantity during fueling. Magnetic dripless fuel measuring sticks (AMM 28-44-00/001) permit manual measurement of fuel quantity at many locations in each fuel tank.

I. Fuel Configuration Light
(1) The fuel configuration light comes on and an EICAS FUEL CONFIG caution or advisory message shows under the subsequent conditions.
(a) Fuel imbalance between the main fuel tanks.
(b) Fuel in auxiliary fuel tank and override pumps are off.
(2) The fuel configuration light comes on and an EICAS LOW FUEL caution and advisory message is shown when there are low fuel levels in the main fuel tanks.

BOEING PROPRIETARY - Copyright (C) - Unpublished Work - See title page for details.

FUEL SYSTEM - MAINTENANCE PRACTICES

1. General
   A. This procedure contains airworthiness limitation precautions.
   B. This procedure contains a task to examine the fuel boost pumps.
      (1) The inspection of the boost pumps is part of an inspection to find if there is fuel contamination of the fuel systems. To complete the inspection of the fuel systems for fuel contamination, do a check on the engine equipment (Chapter 71), the engine fuel system (Chapter 73) and the APU (Chapter 49).
   C. This procedure also contains tasks for inspection and replacement of the electrical bonding jumpers in the fuel system.

TASK 28-00-00-912-042

2. Airworthiness Limitation Precautions
   A. General
      (1) Critical Design Configuration Control Limitations (CDCCLs)
         (a) All occurrences of CDCCLs found in this chapter of the AMM are identified by this note after each applicable CDCCL design feature:
            1) NOTE: CDCCL - Refer to the task: Airworthiness Limitation Precautions (AMM 28-00-00/201), for important information on Critical Design Configuration ControlLimitations (CDCCLs).
         (b) Design features that are CDCCLs are defined and controlled by Special Federal Aviation Regulation (SFAR) 88, and can be found in Section 9 of the Maintenance Planning Data (MPD) document. CDCCLs are a means of identifying certain design configuration features intended to preclude a fuel tank ignition source for the operational life of the airplane. CDCCLs are mandatory and cannot be changed or deleted without the approval of the FAA office that is responsible for the airplane model Type Certificate, or applicable regulatory agency. A critical fueltank ignition source prevention feature may exist in the fuel system and its related installation or in systems that, if a failure condition were to develop, could interact with the fuel system in such a way that an unsafe condition would develop without this limitation. Strict adherence to configuration, methods, techniques, and practices as prescribed is required to ensure the CDCCL is complied with. Any use of parts, methods, techniques or practices not contained in the applicable CDCCL must be approved by the FAA office that is responsible for the airplane model Type Certificate, or applicable regulatory agency.

BOEING PROPRIETARY - Copyright (C) - Unpublished Work - See title page for details.

(2) Airworthiness Limitation Instructions (ALIs)

(a) All occurrences of fuel tank system ALIs found in this chapter of the AMM are identified by this step after the General section in the applicable ALI inspection task:

1) ALI - Refer to the task: Airworthiness Limitation Precautions (AMM 28-00-00/201), for important information on airworthiness limitation instructions(ALIs).

(b) Inspection tasks that are ALIs are defined and controlled by Special Federal Aviation Regulation (SFAR) 88, and can be found in Section 9 of the Maintenance Planning Data (MPD) document. These ALIs identify inspection tasks related to fuel tank ignition source prevention which must be done to maintain the design level of safety for the operational life of the airplane. These ALIs are mandatory and cannot be changed or deleted without the approval of the FAA office that is responsible for the airplane model Type Certificate, or applicable regulatory agency. Strict adherence to methods, techniques and practices as prescribed is required to ensure the ALI is complied with. Any use of methods, techniques or practices not contained in these ALIs must be approved by the FAA office that is responsible for the airplane model Type Certificate, or applicable regulatory agency.

B. Access

(1) Location Zones

100 Lower Half of Fuselage
200 Upper Half of Fuselage
500 Left Wing
600 Right Wing

C. Critical Design Configuration Control Limitations (CDCCLs)

S 912-043

WARNING: OBEY THE MANUFACTURER'S PROCEDURES WHEN YOU DO ANY MAINTENANCE THAT MAY AFFECT A CDCCL. IF YOU DO NOT FOLLOW THE PROCEDURES, IT CAN INCREASE THE THE RISK OF A FUEL TANK IGNITION SOURCE.

(1) Make sure you follow the procedures for items identified as CDCCLs.

BOEING PROPRIETARY - Copyright (C) - Unpublished Work - See title page for details.

D. Airworthiness Limitation Instructions (ALIs)

S 912-044

WARNING: OBEY THE MANUFACTURER'S PROCEDURES WHEN YOU DO ANY MAINTENANCE THAT MAY AFFECT AN ALI. IF YOU DO NOT FOLLOW THE PROCEDURES, IT CAN INCREASE THE RISK OF A FUEL TANK IGNITION SOURCE.

(1) Make sure you follow the procedures for tasks identified as ALIs.

TASK 28-00-00-212-001

3. Examine the Fuel Boost Pumps

A. References

(1) AMM 28-11-00/701, Fuel Tanks

(2) AMM 28-22-03/401, Main Tank Fuel Boost Pump

B. Access

(1) Location Zones

133	Wing Center Section (Left)
134	Wing Center Section (Right)
531	Center Auxiliary Tank (Left)
532	Main Tank - Inboard of Rib No. 10 (Left)
541	Main Tank - Outboard of Rib No. 10 (Left)
631	Center Auxiliary Tank (Right)
632	Main Tank - Inboard of Rib No. 10 (Right)
641	Main Tank - Outboard of Rib No. 10 (Right)

C. Procedure

S 022-002

(1) Remove the boost pump from the housing (AMM 28-22-03/401).

S 212-003

(2) If you find corrosion in one of the pumps examine all of the applicable fuel tanks and the fuel system components as soon as possible.

S 172-004

(3) Clean the applicable fuel tanks (AMM 28-11-00/701) and flush the fuel lines with clean fuel.

S 032-005

(4) Remove, disassemble and clean, or replace the airplane fuel system components.

S 412-006

(5) Install the boost pump (AMM 28-22-03/401).

BOEING PROPRIETARY - Copyright (C) - Unpublished Work - See title page for details.

TASK 28-00-00-202-020

4. Inspection of the Electrical Bonding Jumpers in the Fuel System

A. General

(1) This task contains visual and mechanical inspections of the electrical bonding jumpers in the fuel system.

(2) Fuel system installation has a large number of bonding jumpers for the electrical bonding of tubing, mechanical components and electrical components. These bonding jumpers are made up of braided wire and have a mating lug on each end.

(3) The tin plating on the bonding jumper usually supplies a smooth finish. When there is deterioration of the tin plating on the bonding jumper and the copper in the wire reacts with any sulfur compounds in the tank, the finish becomes rough to the touch and the bonding jumper can show signs of fraying.

(4) Do not flex, bend or kink the bonding jumpers more than is necessary. If the bonding jumpers are moved too much, it can cause the loss of tin plating on the wire braid of the bonding jumper.

(5) When you inspect the bonding jumpers, you may see black or brown deposits on the wire braid. This can occur when there is a deterioration of the tin plating on the bonding jumper and the copper in the wire reacts with the sulfur compounds. This discoloration of the tin plating on the bonding jumper and the copper in the wire reacts with the sulfur compounds. This discoloration is not a problem unless the wire braid contains broken strands. If the bonding jumper has broken strands, then you must replace the bonding jumper.

(6) When you inspect the bonding jumpers, inspect for loose clamps and corrosion.

B. References

(1) SWPM 20-20-00, Electrical Bonds and Grounds

C. Access

(1) (Left Main Tank) Location Zones
532 Main Tank - Inboard of Rib No. 10 (Left)
541 Main Tank - Outboard of Rib No. 10 (Left)

(2) (Right Main Tank) Location Zones
632 Main Tank - Inboard of Rib No. 10 (Right)
641 Main Tank - Outboard of Rib No. 10 (Right)

(3) (Center Auxiliary Tank) Location Zones
133 Wing Center Section (Left)
134 Wing Center Section (Right)
531 Center Auxiliary Tank (Left)
631 Center Auxiliary Tank (Right)

D. Electrical Bonding Jumper Visual Inspection

S 212-021

(1) Visually inspect the bonding jumper and clamp for color and deterioration.

BOEING PROPRIETARY - Copyright (C) - Unpublished Work - See title page for details.

S 212-040
(2) If the bonding jumper is silver in color, and free from black or brown deposits, then the bonding jumper is satisfactory.

S 212-041
(3) If the wire braid has black or brown deposits, then inspect the bonding jumper for broken strands.
(a) If the wire braid does not have broken strands, then the bonding jumper is okay.
(b) If the wire braid has broken strands, then do this task: Electrical Bonding Jumpers in the Fuel System Replacement

E. Electrical Bonding Jumper Mechanical Inspection

S 282-028
(1) Try to turn the bonding jumper lugs and tube clamps, if applicable, with light finger pressure.

S 352-029
(2) If the bonding jumper is loose, rework the electrical bond path (SWPM 20-20-00).

TASK 28-00-00-962-031

5. Electrical Bonding Jumpers in the Fuel System Replacement

A. References
(1) SWPM 20-20-00, Electrical Bonds and Grounds

B. Access
(1) (Left Main Tank) Location Zones
532 Main Tank - Inboard of Rib No. 10 (Left)
541 Main Tank - Outboard of Rib No. 10 (Left)

(2) (Right Main Tank) Location Zones
632 Main Tank - Inboard of Rib No. 10 (Right)
641 Main Tank - Outboard of Rib No. 10 (Right)

(3) (Center Auxiliary Tank) Location Zones
133 Wing Center Section (Left)
134 Wing Center Section (Right)
531 Center Auxiliary Tank (Left)
631 Center Auxiliary Tank (Right)

BOEING PROPRIETARY - Copyright (C) - Unpublished Work - See title page for details.

C. Replace the Electrical Bonding Jumper

S 012-023
(1) Remove the bonding jumper.
(a) Keep all the parts necessary for the installation of the bonding jumper.

S 422-024
(2) For the bonding jumpers used to bond electrical equipment, follow the applicable installation procedure in the AMM.

S 422-025
(3) For the bonding jumpers used to bond mechanical equipment or tubing, install the new bonding jumper and hardware (SWPM 20-20-00).
(a) Make sure the mating surface(s) are correctly prepared.
(b) Make sure the bonding jumper installation gives adequate clearance from the structure, tubing or all fuel system parts.

NOTE: This will prevent abrasion.

S 282-026
(4) Do the "Electrical Integrity Check of the Fuel System Bond Path" procedure.

D. Electrical Integrity Check of the Fuel System Bond Path

NOTE: SWPM 20-20-00 defines the measurement processes necessary for installation of electrical bonding hardware. The fuel system tubing and components often incorporate multiple electrical bonds in series between the component and the primary structure. The measurement of the tubing or component bond is a separate requirement.

S 222-027
(1) For bonding jumper hardware installations, do the resistance measurement for electrical integrity (SWPM 20-20-00).

BOEING PROPRIETARY - Copyright (C) - Unpublished Work - See title page for details.

S 222-019

(2) For the fuel system tubing or components, do the subsequent steps:

(a) Measure the total resistance from the tubing or component, to the adjacent primary structure.

(b) Make sure the resistance is not more than 0.10 ohms.

TASK 28-00-00-282-032

6. Fuel System Static Bond Path, Left Main Tank - Inspection

A. References

(1) AMM 28-11-00/201, Fuel Tanks

(2) AMM 28-11-01/401, Main Tank Access Door

B. Access

(1) Location Zones

532 Main Tank-Inboard of Rib No. 10 (Left)

541 Main Tank Outboard of Rib No. 10 (Left)

C. Procedure

S 282-033

(1) For the area in the left main tank between rib No. 3 (rib at WS 226.3) and rib No.31 (rib at WS 990.2), do these steps:

(a) Remove the applicable left main tank access panels (AMM 28-11-01/401).

(b) Go into the applicable openings for the left main tank (AMM 28-11-00/201).

(c) Do this task for all bonding jumpers between rib No. 3 and rib No. 31: Inspection of the Electrical Bonding Jumpers in the Fuel System.

(d) If access is not necessary for subsequent tasks, install the access panels you removed (AMM 28-11-01/401).

TASK 28-00-00-282-038

7. Fuel System Static Bond Path, Right Main Tank - Inspection

A. References

(1) AMM 28-11-00/201, Fuel Tanks

BOEING PROPRIETARY - Copyright (C) - Unpublished Work - See title page for details.

(2) AMM 28-11-01/401, Main Tank Access Door

B. Access
(1) Location Zones
632 Main Tank-Inboard of Rib No. 10 (Right)
641 Main Tank-Outboard of Rib No. 10 (Right)

C. Procedure

S 282-039
(1) For the area in the right main tank between rib No. 3 (rib at WS 226.3) and rib No.31 (rib at WS 990.2), do these steps:
(a) Remove the applicable right main tank access panels (AMM 28-11-01/401).
(b) Go into the applicable openings for the right main tank (AMM 28-11-00/201).
(c) Do this task for all bonding jumpers between rib No. 3 and rib No. 31: Inspection of the Electrical Bonding Jumpers in the Fuel System.
(d) If access is not necessary for subsequent tasks, install the access panels you removed (AMM 28-11-01/401).

TASK 28-00-00-282-034
8. Fuel System Static Bond Path, Center Auxiliary Tank - Inspection
A. References
(1) AMM 28-11-00/201, Fuel Tanks
(2) AMM 28-11-02/401, Auxiliary Tank Access Door
B. Access
(1) Location Zones
136 Environmental Control System Bay (Right)
194 Wing to Body - Forward Lower Half (Right)
531 Center Auxiliary Tank (Left)
631 Center Auxiliary Tank (Right)

BOEING PROPRIETARY - Copyright (C) - Unpublished Work - See title page for details.

C. Procedure

S 282-035

(1) For the area in the auxiliary tank between left rib No. 3 (rib at WS 226.3) and right rib No.3 (rib at WS 226.3), do these steps:

(a) Remove the applicable auxiliary tank access panels (AMM 28-11-02/401).

(b) Go into the applicable openings for the auxiliary tank (AMM 28-11-00/201).

(c) Do this task for all bonding jumpers between left rib No. 3 and right rib No. 3: Inspection of the Electrical Bonding Jumpers in the Fuel System.

(d) If access is not necessary for subsequent tasks, install the access panels you removed (AMM 28-11-01/401).

BOEING PROPRIETARY - Copyright (C) - Unpublished Work - See title page for details.

FUEL - DDG MAINTENANCE PROCEDURES

1. General
   A. This procedure has the maintenance tasks that prepare the airplane for flight with the systems/components that are inoperative.
   B. It also has tasks that put the airplane back to its usual condition.
   C. These are the tasks for the components in the fuel system:
      (1) DDG 28-11-1 Preparation - Sump Drain Valves Inoperative
      (2) DDG 28-11-1 Restoration - Sump Drain Valves Inoperative
      (3) DDG 28-21-1 Preparation - Pressure Fueling System Inoperative
      (4) DDG 28-21-1 Restoration - Pressure Fueling System Inoperative
      (5) DDG 28-21-2 Preparation - Fueling Receptacle Cap Inoperative
      (6) DDG 28-21-2 Restoration - Fueling Receptacle Cap Inoperative
      (7) DDG 28-22-1 Preparation - Main Tank Fuel Boost Pump Inoperative
      (8) DDG 28-22-1 Restoration - Main Tank Fuel Boost Pump Inoperative
      (9) DDG 28-22-2 Preparation - Center Tank Fuel Pumps Inoperative
      (10) DDG 28-22-2 Restoration - Center Tank Fuel Pumps Inoperative
      (11) DDG 28-22-3 Preparation - Dual Fuel Crossfeed Valves Inoperative
      (12) DDG 28-22-3 Restoration - Dual Fuel Crossfeed Valves Inoperative
      (13) DDG 28-25-2 Preparation - APU Fuel Shutoff Valve Inoperative
      (14) DDG 28-25-2 Restoration - APU Fuel Shutoff Valve Inoperative
      (15) DDG 28-25-3 Preparation - APU Fuel Isolation Valve Inoperative
      (16) DDG 28-25-3 Restoration - APU Fuel Isolation Valve Inoperative
      (17) DDG 28-26-1 Preparation - Defuel Valves Inoperative
      (18) DDG 28-26-1 Restoration - Defuel Valves Inoperative
      (19) DDG 28-31-3 Preparation - Fuel Jettison System Inoperative
      (20) DDG 28-31-3 Restoration - Fuel Jettison System Inoperative
      (21) DDG 28-40-1 Preparation - Crossfeed Valve Lights Inoperative
      (22) DDG 28-40-1 Restoration - Crossfeed Valve Lights Inoperative
      (23) DDG 28-40-2 Preparation - Spar Valve Lights Inoperative
      (24) DDG 28-40-2 Restoration - Spar Valve Lights Inoperative
      (25) DDG 28-41-1 Preparation - Fuel Tank Quantity Indication System (Flight Deck) Inoperative
      (26) DDG 28-41-1 Restoration - Fuel Tank Quantity Indication System (Flight Deck) Inoperative
      (27) DDG 28-41-2 Preparation - Fuel Quantity Processor Channels Inoperative
      (28) DDG 28-41-2 Restoration - Fuel Quantity Processor Channels Inoperative
      (29) DDG 28-41-6 Preparation - Fuel Quantity Indications (Fueling Panel) Inoperative
      (30) DDG 28-41-6 Restoration - Fuel Quantity Indications (Fueling Panel) Inoperative
      (31) DDG 28-42-1 Preparation - Fuel Pump Low PRESS Lights Inoperative
      (32) DDG 28-42-1 Restoration - Fuel Pump Low PRESS Lights Inoperative

BOEING PROPRIETARY - Copyright (C) - Unpublished Work - See title page for details.

TASK 28-00-00-049-003

2. DDG 28-11-1 Preparation - Sump Drain Valves Inoperative

A. General

(1) This task gives the maintenance steps which prepare the airplane for flight with a sump drain inoperative.

(2) Review the DDG for applicable operational limits.

B. References

(1) AMM 12-11-03/301, Fuel Sump - Draining

C. Equipment

(1) Fuel Sampling Equipment A12001-14

D. Access

(1) Location Zones

193	Wing to Body - Forward Lower Half (Left)
194	Wing to Body - Forward Lower Half (Right)
531	Center Auxiliary Tank (Left)
532	Main Tank - Inboard of Rib No. 10 (Left)
542	Surge Tank (Left)
631	Center Auxiliary Tank (Right)
632	Main Tank - Inboard of Rib No. 10 (Right)
642	Surge Tank (Right)

(2) Access Panels

193SLX	Fuel Sump Drain Door (Left)
194QRX	Fuel Sump Drain Door (Right)

E. Procedure

S 019-067

(1) Put this placard in the airplane flight log: "SUMP DRAIN VALVE INOP".

S 659-034

(2) Do a check for fuel (or water) at each sump drain valve, with the fuel sample equipment, A12001-14 (AMM 12-11-03/301).

S 869-033

(3) If a sump drain valve is inoperative make sure there is no fuel leakage from the sump valve.

TASK 28-00-00-449-002

3. DDG 28-11-1 Restoration - Sump Drain Valves Inoperative

A. General

(1) This task puts the airplane back to its usual condition after operation with a sump drain valve inoperative.

BOEING PROPRIETARY - Copyright (C) - Unpublished Work - See title page for details.

B. References
(1) AMM 12-11-01/301, Fuel Tank Pressure Fueling
(2) AMM 12-11-03/301, Fuel Sump - Draining
(3) AMM 28-11-05/401, Fuel Sump Drain Valve

C. Access
(1) Location Zones
193 Wing to Body - Forward Lower Half (Left)
194 Wing to Body - Forward Lower Half (Right)
531 Center Auxiliary Tank (Left)
532 Main Tank - Inboard of Rib No. 10 (Left)
542 Surge Tank (Left)
631 Center Auxiliary Tank (Right)
632 Main Tank - Inboard of Rib No. 10 (Right)
642 Surge Tank (Right)

(2) Access Panels
193SLX Fuel Sump Drain Door (Left)
194QRX Fuel Sump Drain Door (Right)

D. Procedure

S 969-068
(1) Replace the inoperative sump drain valve (AMM 28-11-05/401).

S 449-071
(2) After the fuel sump drain is restored, remove the flight log placard: SUMP DRAIN VALVE INOP.

TASK 28-00-00-049-004

4. DDG 28-21-1 Preparation - Pressure Fueling System Inoperative

A. General
(1) This task is for operating the airplane with one or more refuel valves inoperative. If a refuel valve does not operate in the closed position, fuel flow into a tank will decrease or stop. You can open a refuel valve with the manual override screw on the valve actuator.
(2) Use any of the refueling components that operate normally. If all of the refueling system is inoperative you can use the overwing refueling method.
(3) Review the DDG for applicable operational limits.

B. References
(1) AMM 12-11-01/301, Fuel Tank Pressure Refueling
(2) AMM 12-11-02/301, Fuel Tank - Overwing Refueling

BOEING PROPRIETARY - Copyright (C) - Unpublished Work - See title page for details.

C. Fueling Shutoff Valve Inoperative Closed Procedure

S 659-035
(1) Do the task: Fueling with Electrical Power - Manual Operation (AMM 12-11-01/301).

S 659-036
(2) If you cannot open the refuel valve manually, use the Overwing Fueling procedure (AMM 12-11-02/301).

D. Fueling Shutoff Valve Inoperative Open Procedure

S 869-037
(1) AIRPLANES WITH A FUEL JETTISON SYSTEM;
Do the subsequent steps:

NOTE: There are no special maintenance tasks required on airplanes that do not have a fuel jettison system installed.

(a) Deactivate the fuel jettison transfer valves in the closed position (DDG Procedure 28-31-3).
(b) Deactivate the fuel jettison nozzle valves in the closed position (DDG Procedure 28-31-3).

TASK 28-00-00-449-038

5. DDG 28-21-1 Restoration - Pressure Fueling System Inoperative

A. General
(1) This task restores the airplane with one or more refuel valves inoperative.

B. References
(1) AMM 28-21-00/501, Pressure Fueling System
(2) AMM 28-21-02/401, Fueling Shutoff Valve
(3) AMM 28-21-12/401, Fueling Shutoff Valve Control Unit

C. Procedure

S 429-041
(1) If you find the refuel valve is bad, replace the applicable refuel valve unit (AMM 28-21-02/401).

S 429-042
(2) If you find the refuel valve controlling unit is bad, replace the applicable refuel valve controlling unit (AMM 28-21-12/401).

S 719-043
(3) Do the task: Pressure Fueling System Test (AMM 28-21-00/501).

BOEING PROPRIETARY - Copyright (C) - Unpublished Work - See title page for details.

S 449-040

(4) Reactivate the fuel jettison nozzle valves and the fuel jettison transfer valve if they were deactivated (DDG Procedure 28-31-3).

TASK 28-00-00-049-006

6. DDG 28-21-2 Preparation - Fueling Receptacle Cap Inoperative

A. General

(1) This task is applicable when a fueling receptacle cap is inoperative (not installed).

(2) Review the DDG for applicable operational limits.

(3) To get to the fueling receptacle cap, you must open the fueling station door.

B. References

(1) AMM 06-44-00/201, Wings, Access Doors and Panels

(2) AMM 27-81-00/201, Leading Edge Slat System

C. Access

(1) Location Zones

521 Leading Edge to Front Spar (Left)

(2) Access Panels

521QB Fueling Station Door (Left)

D. Fueling Receptacle Cap is Not Installed (Missing) Procedure

S 499-044

WARNING: YOU MUST CAREFULLY DO THE STEPS IN THE TASK BELOW TO INSTALL THE LE FLAP SAFETY LOCKS. THE LE FLAPS CAN MOVE QUICKLY IF YOU DO NOT INSTALL THE SAFETY LOCKS CORRECTLY. THIS CAN CAUSE INJURY TO PERSONS OR DAMAGE TO EQUIPMENT.

(1) Do the deactivation procedure of the Leading Edge Slats (AMM 27-81-00/201).

S 049-046

(2) Put this placard on the fueling panel door(s):

FUEL CAP MISSING

S 019-047

(3) Open the fueling station door, 521QB (AMM 06-44-00/201).

S 419-048

(4) Before you connect a refuel nozzle during a refuel operation, do a check for unwanted material on the fueling receptacle.

(a) Clean the fueling receptacle if it is necessary.

BOEING PROPRIETARY - Copyright (C) - Unpublished Work - See title page for details.

S 219-049

(5) When the refuel nozzle is removed after a refuel operation, do a check for leaks.

(a) If there is not an indication of fuel leaks, it is OK to send the airplane.

(b) If there is an indication of fuel leaks, troubleshoot the pressure fueling system.

1) Repair the problems that you find.

S 419-050

(6) Close the fueling station door, 521QB (AMM 06-44-00/201).

S 099-051

WARNING: YOU MUST CAREFULLY DO THE STEPS IN THE TASK BELOW TO REMOVE THE LE FLAP SAFETY LOCKS. THE LE FLAPS CAN MOVE QUICKLY IF YOU DO NOT DO THE STEPS CORRECTLY. THIS CAN CAUSE INJURY TO PERSONS OR DAMAGE TO EQUIPMENT.

(7) Do the activation procedure of the Leading Edge Slats (AMM 27-81-00/201).

TASK 28-00-00-449-007

7. DDG 28-21-2 Restoration - Fueling Receptacle Cap Inoperative

A. General

(1) This task restores the airplane to normal after operation with a fueling receptacle cap inoperative (not installed).

(2) To get to the fueling receptacle cap, you must open the fueling station door.

B. References

(1) AMM 06-44-00/201, Wings, Access Doors and Panels

(2) AMM 27-81-00/201, Leading Edge Slat System

C. Access

(1) Location Zones

521 Leading Edge to Front Spar (Left)

(2) Access Panels

521QB Fueling Station Door (Left)

D. Procedure

BOEING PROPRIETARY - Copyright (C) - Unpublished Work - See title page for details.

S 499-052

WARNING: YOU MUST CAREFULLY DO THE STEPS IN THE TASK BELOW TO INSTALL THE LE FLAP SAFETY LOCKS. THE LE FLAPS CAN MOVE QUICKLY IF YOU DO NOT INSTALL THE SAFETY LOCKS CORRECTLY. THIS CAN CAUSE INJURY TO PERSONS OR DAMAGE TO EQUIPMENT.

(1) Do the deactivation procedure of the Leading Edge Slats (AMM 27-81-00/201).

S 019-053

(2) Open the fueling station door, 521QB (AMM 06-44-00/201).

S 429-054

(3) Install a fueling receptacle cap on the refuel receptacle.
   (a) Clean the fueling receptacle if it is necessary.

S 449-055

(4) Remove this placard from the refueling door: FUEL CAP MISSING.

S 419-056

(5) Close the fueling station door, 521QB (AMM 06-44-00/201).

S 099-057

WARNING: YOU MUST CAREFULLY DO THE STEPS IN THE TASK BELOW TO REMOVE THE LE FLAP SAFETY LOCKS. THE LE FLAPS CAN MOVE QUICKLY IF YOU DO NOT DO THE STEPS CORRECTLY. THIS CAN CAUSE INJURY TO PERSONS OR DAMAGE TO EQUIPMENT.

(6) Do the activation procedure of the Leading Edge Slats (AMM 27-81-00/201).

TASK 28-00-00-049-257

8. DDG 28-22-1 Preparation - Main Tank Fuel Boost Pump Inoperative

A. General

(1) This task is for operation of the airplane with one main tank boost pump inoperative.

BOEING PROPRIETARY - Copyright (C) - Unpublished Work - See title page for details.

(2) Review the DDG for applicable operational limits.

B. Access

(1) Location Zones

211 Control Cabin -Section 41 (Left)
212 Control Cabin -Section 41 (Right)

C. Main Tank Fuel Boost Pump Deactivation Procedure

S 869-258

(1) Make sure all the fuel pump switch-lights are in the off position on the overhead panel, P5.

S 869-259

(2) If the left forward fuel boost pump is inoperative, do this step:

(a) Open this circuit breaker on the main power distribution panel, P6, and attach a circuit breaker lock:

1) 6G24, L FWD FUEL BOOST PUMP

S 869-246

(3) If the left aft fuel boost pump is inoperative, do this step:

(a) Open this circuit breaker on the main power distribution panel, P6, and attach a circuit breaker lock:

1) 6G15, L AFT FUEL BOOST PUMP

S 869-247

(4) If the right forward fuel boost pump is inoperative, do this step:

(a) Open this circuit breaker on the main power distribution panel, P6, and attach a circuit breaker lock:

1) 6G18, R FWD FUEL BOOST PUMP

S 869-248

(5) If the right aft fuel boost pump is inoperative, do this step:

(a) Open this circuit breaker on the main power distribution panel, P6, and attach a circuit breaker lock:

1) 6G21, R AFT FUEL BOOST PUMP

TASK 28-00-00-449-260

9. DDG 28-22-1 Restoration - Main Tank Fuel Boost Pump Inoperative

A. General

(1) This task restores the airplane with a main tank fuel boost pump inoperative.

B. References

(1) AMM 24-22-00/201, Electrical Power Control
(2) FIM 28-22-00/101, Engine Fuel Feed System

C. Access

(1) Location Zones

211 Control Cabin -Section 41 (Left)
212 Control Cabin -Section 41 (Right)

BOEING PROPRIETARY - Copyright (C) - Unpublished Work - See title page for details.

D. Main Tank Fuel Boost Pump Restoration Procedure

S 869-249
(1) Make sure all the fuel pump switch-lights are in the off position on the overhead panel, P5.

S 869-250
(2) Supply electrical power (AMM 24-22-00/201).

S 869-251
(3) If the left forward fuel boost pump is inoperative, do this step:
(a) Remove the circuit breaker lock and close this circuit breaker on the main power distribution panel, P6:
1) 6G24, L FWD FUEL BOOST PUMP

S 869-252
(4) If the left aft fuel boost pump is inoperative, do this step:
(a) Remove the circuit breaker lock and close this circuit breaker on the main power distribution panel, P6:
1) 6G15, L AFT FUEL BOOST PUMP

S 869-253
(5) If the right forward fuel boost pump is inoperative, do this step:
(a) Remove the circuit breaker lock and close this circuit breaker on the main power distribution panel, P6:
1) 6G18, R FWD FUEL BOOST PUMP

S 869-254
(6) If the right aft fuel boost pump is inoperative, do this step:
(a) Remove the circuit breaker lock and close this circuit breaker on the main power distribution panel, P6:
1) 6G21, R AFT FUEL BOOST PUMP

S 819-255
(7) Troubleshoot and repair the inoperative main fuel boost pump.
(a) Do the Fault Isolation Procedure: Boost Pump Low Pressure Light On, EICAS Message Displayed (FIM 28-22-00/101).

S 869-256
(8) Remove the electrical power (AMM 24-22-00/201).

BOEING PROPRIETARY - Copyright (C) - Unpublished Work - See title page for details.

TASK 28-00-00-049-008

10. DDG 28-22-2 Preparation - Center Tank Fuel Pumps Inoperative
    A. General
        (1) This task is for operation of the airplane with one or two center tank override pumps inoperative.
        (2) Review the DDG for applicable operational limits.
    B. Access
        (1) Location Zones
            211 Control Cabin -Section 41 (Left)
            212 Control Cabin -Section 41 (Right)
    C. Center Tank Fuel Pump Deactivation Procedure

        S 869-058
        (1) Make sure all the fuel pump switchlights are in the off position on the overhead panel, P5.

        S 869-059
        (2) If the left center override fuel pump is inoperative, do this step:
            (a) Open this circuit breaker on the main power distribution panel, P6, and attach a circuit breaker lock:
                1) 6F15, L FUEL OVRD PUMP

        S 869-060
        (3) If the right center override fuel pump is inoperative, do this step:
            (a) Open this circuit breaker on the main power distribution panel, P6, and attach a circuit breaker lock:
                1) 6F21, R FUEL OVRD PUMP

TASK 28-00-00-449-009

11. DDG 28-22-2 Restoration - Center Tank Fuel Pumps Inoperative
    A. General
        (1) This task restores the airplane with center tank override pumps inoperative.
    B. References
        (1) AMM 24-22-00/201, Electrical Power Control

BOEING PROPRIETARY - Copyright (C) - Unpublished Work - See title page for details.

(2) FIM 28-22-00/101, Engine Fuel Feed System

C. Access

(1) Location Zones

211 Control Cabin -Section 41 (Left)

212 Control Cabin -Section 41 (Right)

D. Center Tank Fuel Pump Restoration Procedure

S 869-061

(1) Make sure all the fuel pump switchlights are in the off position on the overhead panel, P5.

S 869-062

(2) Supply electrical power (AMM 24-22-00/201).

S 869-063

(3) If the left center override fuel pump is inoperative, do this step:

(a) Remove the circuit breaker lock and close this circuit breaker on the main power distribution panel, P6:

1) 6F15, L FUEL OVRD PUMP

S 869-064

(4) If the right center override fuel pump is inoperative, do this step:

(a) Remove the circuit breaker lock and close this circuit breaker on the main power distribution panel, P6:

1) 6F21, R FUEL OVRD PUMP

S 819-065

(5) Troubleshoot and repair the inoperative center override fuel pump.

(a) Do the Fault Isolation Procedure: Center Boost Pump Low Pressure Light On, EICAS CTR (L,R) FUEL PUMP Message Displayed (FIM 28-22-00/101).

S 869-066

(6) Remove electrical power (AMM 24-22-00/201).

TASK 28-00-00-049-010

12. DDG 28-22-3 Preparation - Dual Fuel Crossfeed Valves Inoperative

A. General

(1) This task is for operation of the airplane with an inoperative engine crossfeed valve.

BOEING PROPRIETARY - Copyright (C) - Unpublished Work - See title page for details.

(2) Review the DDG for applicable operational limits.

B. References

(1) AMM 24-22-00/201, Electrical Power Control

(2) AMM 32-00-15/201, Landing Gear Door Locks

C. Access

(1) Location Zones

133	Wing Center Section (Left)
134	Wing Center Section (Right)
136	Environmental Control System Bay (Right)
211	Control Cabin -Section 41 (Left)
212	Control Cabin -Section 41 (Right)
531	Center Auxiliary Tank (Left)

(2) Access Panels

136KZ	Auxiliary Tank Access Door (Center)
531BB	Auxiliary Tank Access Door (Left)

D. Crossfeed Valve Deactivation Procedure

S 869-076

(1) Supply electrical power (AMM 24-22-00/201).

S 489-072

WARNING: USE THE PROCEDURE IN AMM 32-00-15/201 TO INSTALL THE DOOR LOCKS. THE DOORS OPEN AND CLOSE QUICKLY AND CAN CAUSE INJURY TO PERSONS OR DAMAGE TO EQUIPMENT.

(2) Open the doors for the landing gear and install the door locks (AMM 32-00-15/201).

S 869-073

(3) Make sure the forward and aft crossfeed valve switchlights are in the off position, on the overhead panel, P5.

S 869-074

(4) If the forward crossfeed valve is inoperative, do these steps:

(a) Open this circuit breaker and attach a circuit breaker lock:

1) 11M20, FWD FUEL CROSSFEED VALVE

BOEING PROPRIETARY - Copyright (C) - Unpublished Work - See title page for details.

(b) Remove, cap and stow the electrical connector to the actuator for the forward crossfeed valve.
(c) Move the manual override handle on the actuator for the forward crossfeed valve to the CLOSED position.
1) Install lockwire to the manual override handle to lock the actuator in the CLOSED position.

S 869-075
(5) If the aft crossfeed valve is inoperative, do these steps:
(a) Open this circuit breaker and attach a circuit breaker lock:
1) 11M21, AFT FUEL CROSSFEED VALVE
(b) Remove, cap and stow the electrical connector to the actuator for the aft crossfeed valve.
(c) Move the manual override handle on the actuator for the aft crossfeed valve to the CLOSED position.
1) Install lockwire to the manual override handle to lock the actuator in the CLOSED position.

S 719-077
(6) Put the operative crossfeed valve switchlight, on the overhead panel, P5, to the ON position.

S 719-078
(7) Go to the wheel well and make sure that the operative crossfeed valve moved to the OPEN position.

S 719-079
(8) Put the operative crossfeed switchlight, on the overhead panel, P5, to the OFF position.

S 719-080
(9) Go to the wheel well and make sure that the operative crossfeed valve moved to the CLOSED position.

S 719-081
(10) Repeat the steps to open and close the operative crossfeed valve to make sure that it will operate.

BOEING PROPRIETARY - Copyright (C) - Unpublished Work - See title page for details.

S 049-082

(11) Put an INOP placard on the inoperative crossfeed switchlight on the overhead panel, P5.

S 489-083

WARNING: USE THE PROCEDURE IN AMM 32-00-15/201 TO REMOVE THE DOOR LOCKS. THE DOORS OPEN AND CLOSE QUICKLY AND CAN CAUSE INJURY TO PERSONS OR DAMAGE TO EQUIPMENT.

(12) Remove the door locks and close the landing gear doors. (AMM 32-00-15/201).

S 869-084

(13) Remove electrical power (AMM 24-22-00/201).

TASK 28-00-00-449-011

13. DDG 28-22-3 Restoration - Dual Fuel Crossfeed Valves Inoperative

A. General

(1) This task restores the airplane with an inoperative engine crossfeed valve.

B. References

(1) AMM 24-22-00/201, Electrical Power Control
(2) AMM 32-00-15/201, Landing Gear Door Locks
(3) FIM 28-22-00/101, Engine Fuel Feed System

C. Access

(1) Location Zones

133	Wing Center Section (Left)
134	Wing Center Section (Right)
136	Environmental Control System Bay (Right)
211	Control Cabin -Section 41 (Left)
212	Control Cabin -Section 41 (Right)
531	Center Auxiliary Tank (Left)

BOEING PROPRIETARY - Copyright (C) - Unpublished Work - See title page for details.

(2) Access Panels
136KZ Auxiliary Tank Access Door (Center)
531BB Auxiliary Tank Access Door (Left)

D. Crossfeed Valve Restoration Procedure

S 869-085
(1) Supply electrical power (AMM 24-22-00/201).

S 489-086

WARNING: USE THE PROCEDURE IN AMM 32-00-15/201 TO INSTALL THE DOOR LOCKS. THE DOORS OPEN AND CLOSE QUICKLY AND CAN CAUSE INJURY TO PERSONS OR DAMAGE TO EQUIPMENT.

(2) Open the doors for the landing gear and install the door locks (AMM 32-00-15/201).

S 869-087
(3) Make sure the forward and aft crossfeed valve switchlights are in the off position, on the overhead panel, P5.

S 869-088
(4) If the forward crossfeed valve is inoperative, do these steps:
(a) Install the electrical connector to the actuator for the forward crossfeed valve.
(b) Remove the lockwire from the manual override handle of the actuator for the forward crossfeed valve.
(c) Remove the circuit breaker lock and close this circuit breaker:
1) 11M20, FWD FUEL CROSSFEED VALVE

S 869-089
(5) If the aft crossfeed valve is inoperative, do these steps:
(a) Install the electrical connector to the actuator for the aft crossfeed valve.
(b) Remove the lockwire from the manual override handle of the actuator for the aft crossfeed valve.

BOEING PROPRIETARY - Copyright (C) - Unpublished Work - See title page for details.

(c) Remove the circuit breaker lock and close this circuit breaker:
1) 11M21, AFT FUEL CROSSFEED VALVE

S 819-090

(6) Troubleshoot and repair the inoperative crossfeed valve.
(a) Do the Fault Isolation Procedure: Fuel Crossfeed Valve Light Fails to Extinguish (FIM 28-22-00/101).

S 449-091

(7) Remove the INOP placard on the inoperative crossfeed switchlight on the overhead panel, P5.

S 489-094

WARNING: USE THE PROCEDURE IN AMM 32-00-15/201 TO REMOVE THE DOOR LOCKS. THE DOORS OPEN AND CLOSE QUICKLY AND CAN CAUSE INJURY TO PERSONS OR DAMAGE TO EQUIPMENT.

(8) Remove the door locks and close the landing gear doors. (AMM 32-00-15/201).

S 869-093

(9) Remove electrical power (AMM 24-22-00/201).

TASK 28-00-00-049-012

14. DDG 28-25-2 Preparation - APU Fuel Shutoff Valve Inoperative

A. General
(1) This task is for operation of the airplane with an inoperative APU fuel shutoff valve.
(2) Review the DDG for applicable operational limits.

B. References
(1) AMM 32-00-15/201, Landing Gear Door Locks

C. Access
(1) Location Zones
211 Control Cabin -Section 41 (Left)
212 Control Cabin -Section 41 (Right)
531 Center Auxiliary Tank (Left)

D. APU Fuel Shutoff Valve Deactivation Procedure

BOEING PROPRIETARY - Copyright (C) - Unpublished Work - See title page for details.

S 489-095

WARNING: USE THE PROCEDURE IN AMM 32-00-15/201 TO INSTALL THE DOOR LOCKS. THE DOORS OPEN AND CLOSE QUICKLY AND CAN CAUSE INJURY TO PERSONS OR DAMAGE TO EQUIPMENT.

(1) Open the doors for the landing gear and install the door locks (AMM 32-00-15/201).

S 869-096

(2) Make sure the APU Start switch is in the off position, on the overhead panel, P5.

S 869-097

(3) Do these steps to deactivate the APU fuel shutoff valve:
   (a) Open this circuit breaker, on the main power distribution panel, P6, and attach a circuit breaker lock:
      1) 6E3, FUEL VALVES APU
   (b) Remove, cap and stow the electrical connector to the actuator for the APU fuel shutoff valve.
   (c) Move the manual override handle on the actuator for the APU fuel shutoff valve to the CLOSED position.
      1) Install lockwire to the manual override handle to lock the actuator in the CLOSED position.

S 049-100

(4) Put an INOP placard on the APU control panel on the overhead panel, P5.

S 489-098

WARNING: USE THE PROCEDURE IN AMM 32-00-15/201 TO REMOVE THE DOOR LOCKS. THE DOORS OPEN AND CLOSE QUICKLY AND CAN CAUSE INJURY TO PERSONS OR DAMAGE TO EQUIPMENT.

(5) Remove the door locks and close the landing gear doors (AMM 32-00-15/201).

S 869-101

(6) Tell dispatch that the APU is inoperative.

BOEING PROPRIETARY - Copyright (C) - Unpublished Work - See title page for details.

TASK 28-00-00-449-013

15. DDG 28-25-2 Restoration - APU Fuel Shutoff Valve Inoperative

A. General

(1) This task restores the airplane with an inoperative APU fuel shutoff valve.

B. References

(1) AMM 24-22-00/201, Electrical Power Control
(2) AMM 32-00-15/201, Landing Gear Door Locks
(3) FIM 28-25-00/101, APU Fuel Feed System

C. Access

(1) Location Zones
211 Control Cabin -Section 41 (Left)
212 Control Cabin -Section 41 (Right)
531 Center Auxiliary Tank (Left)

D. APU Fuel Shutoff Valve Restoration Procedure

S 869-102

(1) Supply electrical power (AMM 24-22-00/201).

S 489-103

WARNING: USE THE PROCEDURE IN AMM 32-00-15/201 TO INSTALL THE DOOR LOCKS. THE DOORS OPEN AND CLOSE QUICKLY AND CAN CAUSE INJURY TO PERSONS OR DAMAGE TO EQUIPMENT.

(2) Open the doors for the landing gear and install the door locks (AMM 32-00-15/201).

S 869-104

(3) Make sure the APU start switch is in the off position, on the overhead panel, P5.

S 869-105

(4) Do these steps to activate the APU fuel shutoff valve:
(a) Install the electrical connector to the actuator for the APU fuel shutoff valve.
(b) Remove the lockwire from the manual override handle of the actuator for the APU fuel shutoff valve.
(c) Remove the circuit breaker lock and close this circuit breaker on the main power distribution panel, P6:
1) 6E3, FUEL VALVES APU

BOEING PROPRIETARY - Copyright (C) - Unpublished Work - See title page for details.

S 819-106

(5) Troubleshoot and repair the inoperative APU fuel shutoff valve.

(a) Do the Fault Isolation Procedure: APU Fault Light Illuminates and EICAS Message "APU FUEL VAL" Displayed (FIM 28-25-00/101).

S 449-107

(6) Remove the INOP placard on the APU control panel on the P5 overhead panel.

S 489-108

WARNING: USE THE PROCEDURE IN AMM 32-00-15/201 TO REMOVE THE DOOR LOCKS. THE DOORS OPEN AND CLOSE QUICKLY AND CAN CAUSE INJURY TO PERSONS OR DAMAGE TO EQUIPMENT.

(7) Remove the door locks and close the landing gear doors. (AMM 32-00-15/201).

S 869-109

(8) Remove electrical power (AMM 24-22-00/201).

TASK 28-00-00-049-014

16. DDG 28-25-3 Preparation - APU Fuel Isolation Valve Inoperative (If Installed)

A. General

(1) This task is for operation of the airplane with an inoperative APU fuel isolation valve.

(2) Review the DDG for applicable operational limits.

B. References

(1) AMM 32-00-15/201, Landing Gear Door Locks

C. Access

(1) Location Zones

211 Control Cabin -Section 41 (Left)
212 Control Cabin -Section 41 (Right)
531 Center Auxiliary Tank (Left)

D. APU Fuel Isolation Valve Deactivation Procedure

S 489-110

WARNING: USE THE PROCEDURE IN AMM 32-00-15/201 TO INSTALL THE DOOR LOCKS. THE DOORS OPEN AND CLOSE QUICKLY AND CAN CAUSE INJURY TO PERSONS OR DAMAGE TO EQUIPMENT.

(1) Open the doors for the landing gear and install the door locks (AMM 32-00-15/201).

BOEING PROPRIETARY - Copyright (C) - Unpublished Work - See title page for details.

S 869-111
(2) Make sure the APU Start switch is in the off position, on the overhead panel, P5.

S 869-112
(3) Do these steps to deactivate the APU fuel isolation valve:
(a) Open this circuit breaker, on the overhead circuit breaker panel, P11, and attach a circuit breaker lock:
1) 11D35, FUEL DC PUMP CONT
(b) Remove, cap and stow the electrical connector to the actuator for the APU fuel isolation valve.
(c) Move the manual override handle on the actuator for the APU fuel isolation valve to the CLOSED position.
1) Install lockwire to the manual override handle to lock the actuator in the CLOSED position.

S 489-113

WARNING: USE THE PROCEDURE IN AMM 32-00-15/201 TO REMOVE THE DOOR LOCKS. THE DOORS OPEN AND CLOSE QUICKLY AND CAN CAUSE INJURY TO PERSONS OR DAMAGE TO EQUIPMENT.

(4) Remove the door locks and close the landing gear doors. (AMM 32-00-15/201).

TASK 28-00-00-449-015
17. DDG 28-25-3 Restoration - APU Fuel Isolation Valve Inoperative (If Installed)
A. General
(1) This task restores the airplane with an inoperative APU fuel isolation valve.
B. References
(1) AMM 24-22-00/201, Electrical Power Control
(2) AMM 32-00-15/201, Landing Gear Door Locks
(3) FIM 28-25-00/101, APU Fuel Feed System
C. Access
(1) Location Zones
211 Control Cabin -Section 41 (Left)
212 Control Cabin -Section 41 (Right)
531 Center Auxiliary Tank (Left)

D. APU Fuel Isolation Valve Restoration Procedure

S 869-114
(1) Supply electrical power (AMM 24-22-00/201).

BOEING PROPRIETARY - Copyright (C) - Unpublished Work - See title page for details.

S 489-115

WARNING: USE THE PROCEDURE IN AMM 32-00-15/201 TO INSTALL THE DOOR LOCKS. THE DOORS OPEN AND CLOSE QUICKLY AND CAN CAUSE INJURY TO PERSONS OR DAMAGE TO EQUIPMENT.

(2) Open the doors for the landing gear and install the door locks (AMM 32-00-15/201).

S 869-116

(3) Make sure the APU start switch is in the off position, on the overhead panel, P5.

S 869-117

(4) Do these steps to activate the APU fuel isolation valve:
   (a) Install the electrical connector to the actuator for the APU fuel isolation valve.
   (b) Remove the lockwire from the manual override handle of the actuator for the APU fuel isolation valve.
   (c) Remove the circuit breaker lock and close this circuit breaker on the overhead circuit breaker panel, P11:
      1) 11D35, FUEL DC PUMP CONT

S 819-118

(5) Troubleshoot and repair the inoperative APU fuel isolation valve.
   (a) Do the Fault Isolation Procedure: EICAS Message "APU ISLN VAL" Displayed (FIM 28-25-00/101).

S 489-119

WARNING: USE THE PROCEDURE IN AMM 32-00-15/201 TO REMOVE THE DOOR LOCKS. THE DOORS OPEN AND CLOSE QUICKLY AND CAN CAUSE INJURY TO PERSONS OR DAMAGE TO EQUIPMENT.

(6) Remove the door locks and close the landing gear doors. (AMM 32-00-15/201).

S 869-120

(7) Remove electrical power (AMM 24-22-00/201).

TASK 28-00-00-049-016

18. DDG 28-26-1 Preparation - Defuel Valves Inoperative

A. General

(1) This task is for operation of the airplane with an inoperative defuel valve.

BOEING PROPRIETARY - Copyright (C) - Unpublished Work - See title page for details.

(2) Review the DDG for applicable operational limits.

B. References

(1) AMM 06-44-00/201, Wings, Access Doors and Panels
(2) AMM 27-51-00/201, Flight Controls
(3) AMM 27-81-00/201, Leading Edge Slat System
(4) AMM 32-00-15/201, Landing Gear Door Locks

C. Access

(1) Location Zones

211	Control Cabin -Section 41 (Left)
212	Control Cabin -Section 41 (Right)
521	Leading Edge to Front Spar (Left)
532	Main Tank - Inboard of Rib No./10 (Left)
551	Rear Spar to MLG Support Beam (Left)
631	Center Auxiliary Tank (Right)
632	Main Tank - Inboard of Rib No./10 (Right)
651	Rear Spar to MLG Support Beam (Right)

(2) Access Panels

521QB	Fueling Station Door (Left)
551TB	Trailing Edge Skin Panel (Left)
651TB	Trailing Edge Skin Panel (Right)

D. Defuel Valve Deactivation Procedure

S 489-121

WARNING: USE THE PROCEDURE IN AMM 32-00-15/201 TO INSTALL THE DOOR LOCKS. THE DOORS OPEN AND CLOSE QUICKLY AND CAN CAUSE INJURY TO PERSONS OR DAMAGE TO EQUIPMENT.

(1) Open the doors for the landing gear and install the door locks (AMM 32-00-15/201).

S 489-122

WARNING: YOU MUST CAREFULLY DO THE STEPS IN THE TASK BELOW TO INSTALL THE LE FLAP SAFETY LOCKS. THE LE FLAPS CAN MOVE QUICKLY IF YOU DO NOT INSTALL THE SAFETY LOCKS CORRECTLY. THIS CAN CAUSE INJURY TO PERSONS OR DAMAGE TO EQUIPMENT.

(2) Do the deactivation procedure of the Leading Edge Slats (AMM 27-81-00/201).

BOEING PROPRIETARY - Copyright (C) - Unpublished Work - See title page for details.

S 489-123

WARNING: DO THE DEACTIVATION OF THE FLAP SYSTEM PROCEDURE (AMM 27-51-00/201). FAILURE TO DO THE DEACTIVATION OF THE FLAP SYSTEM PROCEDURE COULD CAUSE INJURY OR DAMAGE.

(3) Do the deactivation of the flap system procedure for the trailing edge flaps (AMM 27-51-00/201).

S 869-124

(4) Open the refueling station door, 521QB.

S 869-125

(5) Make sure the inoperative defuel switch(es) are in the off position, on the refuel panel, P28.

S 869-126

(6) Do these steps to deactivate the defuel valve:
   (a) Open this circuit breaker, on the main power distribution panel, P6, and attach a circuit breaker lock:
      1) 6E7, DEFUEL VALVES
   (b) Open this circuit breaker, on the APU external power panel, P34, and attach a circuit breaker lock:
      1) 34L4, DEFLNG VALVES
   (c) Remove the access panel for the inoperative defuel valve.
      1) Remove access panel 551TB to get access to the left main defueling valve (AMM 06-44-00/201).
      2) Remove access panel 651TB to get access to the right main defueling valve (AMM 06-44-00/201).
   (d) Remove, cap and stow the electrical connector to the actuator for the inoperative defuel valve.
   (e) Move the manual override handle on the actuator for the inoperative defuel valve to the CLOSED position.
      1) Install lockwire to the manual override handle to lock the actuator in the CLOSED position.

S 869-127

(7) Install trailing edge access panel(s) (AMM 06-44-00/201).

S 049-128

(8) Put an INOP placard on the inoperative defuel valve(s) switch on the refueling panel, P28.

S 869-129

(9) Close the refueling access door.

BOEING PROPRIETARY - Copyright (C) - Unpublished Work - See title page for details.

S 489-130

WARNING: USE THE PROCEDURE IN AMM 32-00-15/201 TO REMOVE THE DOOR LOCKS. THE DOORS OPEN AND CLOSE QUICKLY AND CAN CAUSE INJURY TO PERSONS OR DAMAGE TO EQUIPMENT.

(10) Remove the door locks and close the landing gear doors. (AMM 32-00-15/201).

S 489-131

WARNING: YOU MUST CAREFULLY DO THE STEPS IN THE TASK BELOW TO REMOVE THE LE FLAP SAFETY LOCKS. THE LE FLAPS CAN MOVE QUICKLY IF YOU DO NOT DO THE STEPS CORRECTLY. THIS CAN CAUSE INJURY TO PERSONS OR DAMAGE TO EQUIPMENT.

(11) Do the activation procedure of the Leading Edge Slats (AMM 27-81-00/201).

S 869-132

WARNING: DO THE ACTIVATION OF THE FLAP SYSTEM PROCEDURE (AMM 27-51-00/201). FAILURE TO DO THE ACTIVATION OF THE FLAP SYSTEM PROCEDURE COULD CAUSE INJURY OR DAMAGE.

(12) Do the activation of the flap system procedure for the trailing edge flaps (AMM 27-51-00/201).

TASK 28-00-00-449-017

19. DDG 28-26-1 Restoration - Defuel Valves Inoperative

A. General

(1) This task restores the airplane with an inoperative defuel valve.

B. References

(1) AMM 06-44-00/201, Wings, Access Doors and Panels
(2) AMM 24-22-00/201, Electrical Power Control
(3) AMM 27-51-00/201, Flight Controls
(4) AMM 27-81-00/201, Leading Edge Slat System
(5) AMM 32-00-15/201, Landing Gear Door Locks
(6) FIM 28-26-00/101, Defueling

BOEING PROPRIETARY - Copyright (C) - Unpublished Work - See title page for details.

C. Access

(1) Location Zones

211	Control Cabin -Section 41 (Left)
212	Control Cabin -Section 41 (Right)
521	Leading Edge to Front Spar (Left)
532	Main Tank - Inboard of Rib No./10 (Left)
551	Rear Spar to MLG Support Beam (Left)
631	Center Auxiliary Tank (Right)
632	Main Tank - Inboard of Rib No./10 (Right)
651	Rear Spar to MLG Support Beam (Right)

(2) Access Panels

521QB	Fueling Station Door (Left)
551TB	Trailing Edge Skin Panel (Left)
651TB	Trailing Edge Skin Panel (Right)

D. Defuel Valve Restoration Procedure

S 869-133

(1) Supply electrical power (AMM 24-22-00/201).

S 489-134

WARNING: USE THE PROCEDURE IN AMM 32-00-15/201 TO INSTALL THE DOOR LOCKS. THE DOORS OPEN AND CLOSE QUICKLY AND CAN CAUSE INJURY TO PERSONS OR DAMAGE TO EQUIPMENT.

(2) Open the doors for the landing gear and install the door locks (AMM 32-00-15/201).

S 489-135

WARNING: YOU MUST CAREFULLY DO THE STEPS IN THE TASK BELOW TO INSTALL THE LE FLAP SAFETY LOCKS. THE LE FLAPS CAN MOVE QUICKLY IF YOU DO NOT INSTALL THE SAFETY LOCKS CORRECTLY. THIS CAN CAUSE INJURY TO PERSONS OR DAMAGE TO EQUIPMENT.

(3) Do the deactivation procedure of the Leading Edge Slats (AMM 27-81-00/201).

BOEING PROPRIETARY - Copyright (C) - Unpublished Work - See title page for details.

S 489-136

WARNING: DO THE DEACTIVATION OF THE FLAP SYSTEM PROCEDURE (AMM 27-51-00/201). FAILURE TO DO THE DEACTIVATION OF THE FLAP SYSTEM PROCEDURE COULD CAUSE INJURY OR DAMAGE.

(4) Do the deactivation of the flap system procedure for the trailing edge flaps (AMM 27-51-00/201).

S 869-137

(5) Make sure the defuel switch is in the off position, on the refueling panel, P28.

S 869-138

(6) Do these steps to activate the defuel valve:
   (a) Remove the trailing access panel to gain access to the inoperative defuel valve (AMM 06-44-00/201).
   (b) Install the electrical connector to the actuator for the inoperative defuel valve.
   (c) Remove the lockwire from the manual override handle of the actuator for the inoperative defuel valve.
   (d) Remove the circuit breaker lock and close this circuit breaker on the main power distribution panel, P6:
      1) 6E7, DEFUEL VALVES
   (e) Remove the circuit breaker lock and close this circuit breaker on the APU external power panel, P34:
      1) 34L4, DEFLNG VALVES

S 819-139

(7) Troubleshoot and repair the inoperative defuel valve.
   (a) Do the Fault Isolation Procedure: Defueling Valve Light Does Not Indicate Selected Valve Position (FIM 28-26-00/101).

S 449-140

(8) Remove the INOP placard on the defuel valve switch on the refueling panel, P28.

S 489-141

WARNING: USE THE PROCEDURE IN AMM 32-00-15/201 TO REMOVE THE DOOR LOCKS. THE DOORS OPEN AND CLOSE QUICKLY AND CAN CAUSE INJURY TO PERSONS OR DAMAGE TO EQUIPMENT.

(9) Remove the door locks and close the landing gear doors. (AMM 32-00-15/201).

BOEING PROPRIETARY - Copyright (C) - Unpublished Work - See title page for details.

S 489-142

WARNING: YOU MUST CAREFULLY DO THE STEPS IN THE TASK BELOW TO REMOVE THE LE FLAP SAFETY LOCKS. THE LE FLAPS CAN MOVE QUICKLY IF YOU DO NOT DO THE STEPS CORRECTLY. THIS CAN CAUSE INJURY TO PERSONS OR DAMAGE TO EQUIPMENT.

(10) Do the activation procedure of the Leading Edge Slats (AMM 27-81-00/201).

S 489-143

WARNING: DO THE ACTIVATION OF THE FLAP SYSTEM PROCEDURE (AMM 27-51-00/201). FAILURE TO DO THE ACTIVATION OF THE FLAP SYSTEM PROCEDURE COULD CAUSE INJURY OR DAMAGE.

(11) Do the activation of the flap system procedure for the trailing edge flaps (AMM 27-51-00/201).

S 869-144

(12) Remove electrical power (AMM 24-22-00/201).

TASK 28-00-00-049-018

20. DDG 28-31-3 Preparation - Fuel Jettison System Inoperative

A. General

(1) This task is for operation of the airplane with an inoperative fuel jettison system.

(2) Review the DDG for applicable operational limits.

B. References

(1) AMM 27-51-00/201, Flight Controls

(2) AMM 32-00-15/201, Landing Gear Door Locks

C. Access

(1) Location Zones

211 Control Cabin -Section 41 (Left)
212 Control Cabin -Section 41 (Right)
531 Center Auxiliary Tank (Left)
541 Main Tank - Outboard of Rib No./10 (Left)
631 Center Auxiliary Tank (Right)
641 Main Tank - Outboard of Rib No./10 (Right)

D. Jettison System Deactivation Procedure

BOEING PROPRIETARY - Copyright (C) - Unpublished Work - See title page for details.

S 489-145

WARNING: USE THE PROCEDURE IN AMM 32-00-15/201 TO INSTALL THE DOOR LOCKS. THE DOORS OPEN AND CLOSE QUICKLY AND CAN CAUSE INJURY TO PERSONS OR DAMAGE TO EQUIPMENT.

(1) Open the doors for the landing gear and install the door locks (AMM 32-00-15/201).

S 489-146

WARNING: DO THE DEACTIVATION OF THE FLAP SYSTEM PROCEDURE (AMM 27-51-00/201). FAILURE TO DO THE DEACTIVATION OF THE FLAP SYSTEM PROCEDURE COULD CAUSE INJURY OR DAMAGE.

(2) Do the deactivation of the flap system procedure for the trailing edge flaps (AMM 27-51-00/201).

S 869-147

(3) Make sure the fuel jettison switch is in the off position, on the overhead panel, P5.

S 869-148

(4) Make sure the L and R jettison nozzle switches, on the overhead panel, P5, are in the off position.

S 869-149

(5) Do these steps to deactivate the fuel jettison system:
   (a) Open these circuit breakers, on the overhead circuit breaker panel, P11, and attach a circuit breaker lock:
      1) 11M13, LEFT JETT CONT
      2) 11M22, RIGHT JETT CONT
      3) 11M14, LEFT JETT NOZZLE VALVE
      4) 11M23, RIGHT JETT NOZZLE VALVE
   (b) Remove, cap and stow the electrical connector to the actuator for the fuel jettison nozzles and transfer valves.

      NOTE: The actuator of the left and right fuel jettison nozzle valves are near the outboard edge of the outboard trailing edge flap.

BOEING PROPRIETARY - Copyright (C) - Unpublished Work - See title page for details.

(c) Move the manual override handle on the actuator for the fuel jettison nozzle and transfer valves to the CLOSED position.
1) Install lockwire to the manual override handle to lock the actuator in the CLOSED position.

S 049-150

(6) Put an FUEL JETTISON INOP placard on the fuel jettison control panel on the overhead panel, P5.

S 489-151

WARNING: USE THE PROCEDURE IN AMM 32-00-15/201 TO REMOVE THE DOOR LOCKS. THE DOORS OPEN AND CLOSE QUICKLY AND CAN CAUSE INJURY TO PERSONS OR DAMAGE TO EQUIPMENT.

(7) Remove the door locks and close the landing gear doors. (AMM 32-00-15/201).

S 489-152

WARNING: DO THE ACTIVATION OF THE FLAP SYSTEM PROCEDURE (AMM 27-51-00/201). FAILURE TO DO THE ACTIVATION OF THE FLAP SYSTEM PROCEDURE COULD CAUSE INJURY OR DAMAGE.

(8) Do the activation of the flap system procedure for the trailing edge flaps (AMM 27-51-00/201).

TASK 28-00-00-449-019

21. DDG 28-31-3 Restoration - Fuel Jettison System Inoperative

A. General
(1) This task restores the airplane with an inoperative fuel jettison system.

B. References
(1) AMM 24-22-00/201, Electrical Power Control
(2) AMM 27-51-00/201, Flight Controls
(3) AMM 32-00-15/201, Landing Gear Door Locks
(4) FIM 28-31-00/101, Fuel Jettison System

BOEING PROPRIETARY - Copyright (C) - Unpublished Work - See title page for details.

C. Access
(1) Location Zones
211 Control Cabin -Section 41 (Left)
212 Control Cabin -Section 41 (Right)
531 Center Auxiliary Tank (Left)
541 Main Tank - Outboard of Rib No./10 (Left)
631 Center Auxiliary Tank (Right)
641 Main Tank - Outboard of Rib No./10 (Right)

D. Jettison System Restoration Procedure

S 869-153
(1) Supply electrical power (AMM 24-22-00/201).

S 489-154

WARNING: USE THE PROCEDURE IN AMM 32-00-15/201 TO INSTALL THE DOOR LOCKS. THE DOORS OPEN AND CLOSE QUICKLY AND CAN CAUSE INJURY TO PERSONS OR DAMAGE TO EQUIPMENT.

(2) Open the doors for the landing gear and install the door locks (AMM 32-00-15/201).

S 489-155

WARNING: DO THE DEACTIVATION OF THE FLAP SYSTEM PROCEDURE (AMM 27-51-00/201). FAILURE TO DO THE DEACTIVATION OF THE FLAP SYSTEM PROCEDURE COULD CAUSE INJURY OR DAMAGE.

(3) Do the deactivation of the flap system procedure for the trailing edge flaps (AMM 27-51-00/201).

S 869-156
(4) Make sure the fuel jettison switch is in the off position, on the overhead panel, P5.

S 869-157
(5) Make sure the L and R jettison nozzle switches, on the overhead panel, P5, are in the off position.

S 869-158
(6) Do these steps to activate the fuel jettison system:
(a) Install the electrical connector to the actuator for the inoperative fuel jettison transfer or nozzle valve(s).

BOEING PROPRIETARY - Copyright (C) - Unpublished Work - See title page for details.

(b) Remove the lockwire from the manual override handle of the actuator for the inoperative fuel jettison transfer or nozzle valve(s).
(c) Remove the circuit breaker lock and close these circuit breaker(s) on the overhead circuit breaker panel, P11:
1) 11M13, LEFT JETT CONT
2) 11M22, RIGHT JETT CONT
3) 11M14, LEFT JETT NOZZLE VALVE
4) 11M23, RIGHT JETT NOZZLE VALVE

S 819-159
(7) Troubleshoot and repair the inoperative fuel jettison system.
(a) Do the applicable Fault Isolation Procedure for the jettison EICAS Message shown (FIM 28-31-00/101).

S 449-160
(8) Remove the FUEL JETTISON INOP placard on the fuel jettison control panel on the overhead panel, P5.

S 489-161

WARNING: USE THE PROCEDURE IN AMM 32-00-15/201 TO REMOVE THE DOOR LOCKS. THE DOORS OPEN AND CLOSE QUICKLY AND CAN CAUSE INJURY TO PERSONS OR DAMAGE TO EQUIPMENT.

(9) Remove the door locks and close the landing gear doors. (AMM 32-00-15/201).

S 489-162

WARNING: DO THE ACTIVATION OF THE FLAP SYSTEM PROCEDURE (AMM 27-51-00/201). FAILURE TO DO THE ACTIVATION OF THE FLAP SYSTEM PROCEDURE COULD CAUSE INJURY OR DAMAGE.

(10) Do the activation of the flap system procedure for the trailing edge flaps (AMM 27-51-00/201).

S 869-163
(11) Remove electrical power (AMM 24-22-00/201).

TASK 28-00-00-049-020
22. DDG 28-40-1 Preparation - Crossfeed Valve Lights Inoperative
A. General
(1) This task is for operation of the airplane with an inoperative engine crossfeed valve light(s).
(2) Review the DDG for applicable operational limits.

BOEING PROPRIETARY - Copyright (C) - Unpublished Work - See title page for details.

B. References
(1) AMM 24-22-00/201, Electrical Power Control
(2) AMM 32-00-15/201, Landing Gear Door Locks

C. Access
(1) Location Zones
133 Wing Center Section (Left)
134 Wing Center Section (Right)
136 Environmental Control System Bay (Right)
211 Control Cabin -Section 41 (Left)
212 Control Cabin -Section 41 (Right)
531 Center Auxiliary Tank (Left)

D. Crossfeed Valve Light Deactivation Procedure

S 869-164
(1) Supply electrical power (AMM 24-22-00/201).

S 489-165

WARNING: USE THE PROCEDURE IN AMM 32-00-15/201 TO INSTALL THE DOOR LOCKS. THE DOORS OPEN AND CLOSE QUICKLY AND CAN CAUSE INJURY TO PERSONS OR DAMAGE TO EQUIPMENT.

(2) Open the doors for the landing gear and install the door locks (AMM 32-00-15/201).

S 869-166
(3) Make sure the forward and aft crossfeed valve switchlights are in the off position, on the overhead panel, P5.

S 869-167
(4) Put the inoperative crossfeed valve switchlight, on the overhead panel, P5, to the ON position.

S 869-168
(5) Go to the wheel well and make sure that the applicable crossfeed valve moved to the OPEN position.

S 869-175
(6) Put the inoperative crossfeed switchlight, on the overhead panel, P5, to the OFF position.

S 869-170
(7) Go to the wheel well and make sure that the applicable crossfeed valve moved to the CLOSED position.

BOEING PROPRIETARY - Copyright (C) - Unpublished Work - See title page for details.

S 869-171
(8) Repeat the steps to open and close the applicable crossfeed valve three times to make sure that it will operate correctly.

S 049-172
(9) Put a LIGHT INOP placard on the inoperative crossfeed switchlight(s) on the overhead panel, P5.

S 489-173

WARNING: USE THE PROCEDURE IN AMM 32-00-15/201 TO REMOVE THE DOOR LOCKS. THE DOORS OPEN AND CLOSE QUICKLY AND CAN CAUSE INJURY TO PERSONS OR DAMAGE TO EQUIPMENT.

(10) Remove the door locks and close the landing gear doors. (AMM 32-00-15/201).

S 869-174
(11) Remove electrical power (AMM 24-22-00/201).

TASK 28-00-00-449-021
23. DDG 28-40-1 Restoration - Crossfeed Valve Lights Inoperative
A. General
(1) This task restores the airplane with an inoperative engine crossfeed valve light(s).
B. References
(1) AMM 24-22-00/201, Electrical Power Control
(2) AMM 32-00-15/201, Landing Gear Door Locks
(3) FIM 28-22-00/101, Engine Fuel Feed System
C. Access
(1) Location Zones
133 Wing Center Section (Left)
134 Wing Center Section (Right)
136 Environmental Control System Bay (Right)
211 Control Cabin -Section 41 (Left)
212 Control Cabin -Section 41 (Right)
531 Center Auxiliary Tank (Left)

D. Crossfeed Valve Light Restoration Procedure

S 869-176
(1) Supply electrical power (AMM 24-22-00/201).

BOEING PROPRIETARY - Copyright (C) - Unpublished Work - See title page for details.

S 489-177

WARNING: USE THE PROCEDURE IN AMM 32-00-15/201 TO INSTALL THE DOOR LOCKS. THE DOORS OPEN AND CLOSE QUICKLY AND CAN CAUSE INJURY TO PERSONS OR DAMAGE TO EQUIPMENT.

(2) Open the doors for the landing gear and install the door locks (AMM 32-00-15/201).

S 869-178

(3) Make sure the forward and aft crossfeed valve switchlights are in the off position, on the overhead panel, P5.

S 819-179

(4) Troubleshoot and repair the inoperative crossfeed valve light(s).
(a) Do the Fault Isolation Procedure: Fuel Crossfeed Valve Light Fails to Illuminate During Valve Transit (FIM 28-22-00/101).

S 449-180

(5) Remove the LIGHT INOP placard on the inoperative crossfeed switchlight on the P5 overhead panel.

S 489-181

WARNING: USE THE PROCEDURE IN AMM 32-00-15/201 TO REMOVE THE DOOR LOCKS. THE DOORS OPEN AND CLOSE QUICKLY AND CAN CAUSE INJURY TO PERSONS OR DAMAGE TO EQUIPMENT.

(6) Remove the door locks and close the landing gear doors. (AMM 32-00-15/201).

S 869-182

(7) Remove electrical power (AMM 24-22-00/201).

TASK 28-00-00-049-022

24. DDG 28-40-2 Preparation - Spar Valve Lights Inoperative

A. General
(1) This task is for operation of the airplane with an inoperative engine spar valve light(s).
(2) Review the DDG for applicable operational limits.

B. References
(1) AMM 06-44-00/201, Wing Access Doors and Panels
(2) AMM 24-22-00/201, Electrical Power Control
(3) AMM 27-51-00/201, Flight Controls
(4) AMM 32-00-15/201, Landing Gear Door Locks

BOEING PROPRIETARY - Copyright (C) - Unpublished Work - See title page for details.

(5) AMM 71-00-00/201, Engine Operation

C. Access

(1) Location Zones

211 Control Cabin -Section 41 (Left)
212 Control Cabin -Section 41 (Right)
551 Rear Spar to MLG Support Beam (Left)
561 Rear Spar to MLG Support Beam (Right)

(2) Access Panels

551TB Trailing Edge Skin Panel (Left)
651TB Trailing Edge Skin Panel (Right)

D. Engine Spar Valve Light Deactivation Procedure

S 869-183

(1) To make sure that the engine spar valve operates correctly, without removing the access panels, do these steps:

(a) Start the engine with the inoperative engine spar valve light (AMM 71-00-00/201).

(b) Open this circuit breaker for the applicable fuel control valve on the overhead circuit breaker panel, P11 :

NOTE: The engine fuel valve actuator will not operate after the fuel control valve circuit breaker is opened. The spar valve actuator will still operate.

1) 11D25, L FUEL CONTROL VALVE
2) 11D26, R FUEL CONTROL VALVE

(c) Move the FUEL CONTROL switch on the flight deck center console, P10, the CUTOFF position.

(d) If the engines stops operating in approximately 40 seconds the engine spar valve is operating correctly.

(e) Close the circuit breaker for the applicable fuel control valve on the overhead circuit breaker panel, P11:

1) 11D25, L FUEL CONTROL VALVE
2) 11D26, R FUEL CONTROL VALVE

S 869-184

(2) To make sure that the engine spar valve operates correctly, without operating the engine, do these steps:

(a) Supply electrical power (AMM 24-22-00/201).

WARNING: USE THE PROCEDURE IN AMM 32-00-15/201 TO INSTALL THE DOOR LOCKS. THE DOORS OPEN AND CLOSE QUICKLY AND CAN CAUSE INJURY TO PERSONS OR DAMAGE TO EQUIPMENT.

(b) Open the doors for the landing gear and install the door locks (AMM 32-00-15/201).

BOEING PROPRIETARY - Copyright (C) - Unpublished Work - See title page for details.

WARNING: DO THE DEACTIVATION OF THE FLAP SYSTEM PROCEDURE (AMM 27-51-00/201). FAILURE TO DO THE DEACTIVATION OF THE FLAP SYSTEM PROCEDURE COULD CAUSE INJURY OR DAMAGE.

(c) Do the deactivation of the flap system procedure for the trailing edge flaps (AMM 27-51-00/201).

(d) To do a check of the left engine spar valve, do these steps:
1) Remove access panel 551TB to get access to the left engine spar valve (AMM 06-44-00/201).
2) Open these circuit breakers on the overhead circuit breaker panel, P11, and attach a DO-NOT-CLOSE tag:
a) 11D25, L FUEL CONT VALVE
b) 11M01, L ENG IGN 1
c) 11M28, L ENG IGN 2
d) 11D07, ENGINE STBY IGN 1
e) 11D08, ENGINE STBY IGN 2

(e) To do a check of the right engine spar valve, do these steps:
1) Remove access panel 651TB to get access to the right engine spar valve (AMM 06-44-00/201).
2) Open these circuit breakers on the overhead circuit breaker panel, P11, and attach a DO-NOT-CLOSE tag:
a) 11D26, R FUEL CONT VALVE
b) 11M02, R ENG IGN 1
c) 11M29, R ENG IGN 2
d) 11D07, ENGINE STBY IGN 1
e) 11D08, ENGINE STBY IGN 2

(f) For the applicable L (R) engine spar valve check, do these steps:
1) Move the fuel control switch, on the flight deck center console, P10, to the RUN position.
2) Make sure that the manual override lever on the engine spar valve moves to the OPEN position.

CAUTION: DO NOT ROTATE THE ENGINE FIRE HANDLE. FIRE EXTINGUISHING AGENT WILL DISCHARGE INTO THE ENGINE NACELLE.

3) Pull the fire handle to the ARM position.
4) Make sure that the manual override lever on the engine spar valve moves to the CLOSED position.
5) Push the fire handle to the DISARM position.
6) Make sure that the manual override lever on the engine spar valve moves to the OPEN position.
7) Move the fuel control switch, on the flight deck center console, P10, to the CUTOFF position.

BOEING PROPRIETARY - Copyright (C) - Unpublished Work - See title page for details.

8) Make sure that the manual override lever on the engine spar valve moves to the CLOSED position.

(g) Install the trailing edge access panel(s) (AMM 06-44-00/201).

(h) Close the applicable circuit breakers on the overhead circuit breaker panel, P11, and remove the DO-NOT-CLOSE tag:

1) 11D25, L FUEL CONT VALVE
2) 11D26, R FUEL CONT VALVE
3) 11M01, L ENG IGN 1
4) 11M02, R ENG IGN 1
5) 11M28, L ENG IGN 2
6) 11M29, R ENG IGN 2
7) 11D07, ENGINE STBY IGN 1
8) 11D08, ENGINE STBY IGN 2

WARNING: USE THE PROCEDURE IN AMM 32-00-15/201 TO REMOVE THE DOOR LOCKS. THE DOORS OPEN AND CLOSE QUICKLY AND CAN CAUSE INJURY TO PERSONS OR DAMAGE TO EQUIPMENT.

(i) Remove the door locks and close the landing gear doors. (AMM 32-00-15/201).

WARNING: DO THE ACTIVATION OF THE FLAP SYSTEM PROCEDURE (AMM 27-51-00/201). FAILURE TO DO THE ACTIVATION OF THE FLAP SYSTEM PROCEDURE COULD CAUSE INJURY OR DAMAGE.

(j) Do the activation of the flap system procedure for the trailing edge flaps (AMM 27-51-00/201).

(k) Remove electrical power (AMM 24-22-00/201).

TASK 28-00-00-449-023

25. DDG 28-40-2 Restoration - Spar Valve Lights Inoperative

A. General

(1) This task restores the airplane with an inoperative engine spar valve light(s).

B. References

(1) AMM 24-22-00/201, Electrical Power Control
(2) AMM 27-51-00/201, Flight Controls
(3) AMM 32-00-15/201, Landing Gear Door Locks
(4) FIM 28-22-00/101, Engine Fuel Feed System

C. Access

(1) Location Zones

211 Control Cabin -Section 41 (Left)
212 Control Cabin -Section 41 (Right)
551 Rear Spar to MLG Support Beam (Left)
561 Rear Spar to MLG Support Beam (Right)

BOEING PROPRIETARY - Copyright (C) - Unpublished Work - See title page for details.

(2) Access Panels
551TB Trailing Edge Skin Panel (Left)
651TB Trailing Edge Skin Panel (Right)

D. Engine Spar Valve Light Restoration Procedure

S 869-185
(1) Supply electrical power (AMM 24-22-00/201).

S 489-186

WARNING: USE THE PROCEDURE IN AMM 32-00-15/201 TO INSTALL THE DOOR LOCKS. THE DOORS OPEN AND CLOSE QUICKLY AND CAN CAUSE INJURY TO PERSONS OR DAMAGE TO EQUIPMENT.

(2) Open the doors for the landing gear and install the door locks (AMM 32-00-15/201).

S 489-187

WARNING: DO THE DEACTIVATION OF THE FLAP SYSTEM PROCEDURE (AMM 27-51-00/201). FAILURE TO DO THE DEACTIVATION OF THE FLAP SYSTEM PROCEDURE COULD CAUSE INJURY OR DAMAGE.

(3) Do the deactivation of the flap system procedure for the trailing edge flaps (AMM 27-51-00/201).

S 819-188
(4) Troubleshoot and repair the inoperative engine spar valve light(s).
(a) Do the Fault Isolation Procedure: Engine Fuel Shutoff (Spar) Valve Switchlight Does Not Indicate Agreement (FIM 28-22-00/101).

S 489-189

WARNING: USE THE PROCEDURE IN AMM 32-00-15/201 TO REMOVE THE DOOR LOCKS. THE DOORS OPEN AND CLOSE QUICKLY AND CAN CAUSE INJURY TO PERSONS OR DAMAGE TO EQUIPMENT.

(5) Remove the door locks and close the landing gear doors. (AMM 32-00-15/201).

BOEING PROPRIETARY - Copyright (C) - Unpublished Work - See title page for details.

S 489-190

WARNING: DO THE ACTIVATION OF THE FLAP SYSTEM PROCEDURE (AMM 27-51-00/201). FAILURE TO DO THE ACTIVATION OF THE FLAP SYSTEM PROCEDURE COULD CAUSE INJURY OR DAMAGE.

(6) Do the activation of the flap system procedure for the trailing edge flaps (AMM 27-51-00/201).

S 869-191

(7) Remove electrical power (AMM 24-22-00/201).

TASK 28-00-00-049-025

26. DDG 28-41-1 Preparation - Fuel Tank Quantity Indication System (Flight Deck) Inoperative

A. General

(1) This task is for operation of the airplane with the Fuel Tank Quantity Indication Systems (Flight Deck) inoperative.

(2) Review the DDG for applicable operational limits.

B. References

(1) AMM 06-44-00/201, Wings, Access Doors and Panels
(2) AMM 07-11-01/201, Jacking Airplane
(3) AMM 12-11-01/301, Fuel Tank Pressure Fueling
(4) AMM 24-22-00/201, Electrical Power Control
(5) AMM 27-81-00/201, Leading Edge Slat System
(6) AMM 28-26-00/201, Defueling
(7) AMM 28-44-00/201, Fuel Measuring Sticks
(8) AMM 32-00-15/201, Landing Gear Door Locks

C. Access

(1) Location Zones

211 Control Cabin - Section 41 (Left)
212 Control Cabin - Section 41 (Right)
532 Main Tank - Inboard of Rib No. 10 (Left)
631 Center Auxiliary Tank (Right)
632 Main Tank - Inboard of Rib No. 10 (Right)

(2) Access Panels

521QB Fueling Station Door (Left)

D. Fuel Quantity Indication System (FQIS) Inoperative Procedure

S 869-242

(1) Supply electrical power (AMM 24-22-00/201).

BOEING PROPRIETARY - Copyright (C) - Unpublished Work - See title page for details.

S 869-233

(2) Do these steps to deactivate the center tank override fuel pumps:
   (a) Make sure all the fuel pump switchlights are in the off position on the overhead panel, P5.
   (b) To deactivate the left center override fuel pump, open this circuit breaker on the main power distribution panel, P6, and attach a circuit breaker lock:
      1) 6F15, L FUEL OVRD PUMP
   (c) To deactivate the right center override fuel pump, open this circuit breaker on the main power distribution panel, P6, and attach a circuit breaker lock:
      1) 6F21, R FUEL OVRD PUMP
   (d) Put a FUEL IN CENTER INOP FOR FUEL CONFIG MSG placard on the inoperative center override fuel switch on the overhead panel, P5.

S 869-234

(3) Do the applicable steps that follow to find the actual fuel quantity (in the fuel tank with an inoperative fuel quantity indication):
   (a) To use the applicable fuel quantity indicator on the fuel panel, P28, do these steps:

      WARNING: YOU MUST CAREFULLY DO THE STEPS IN THE TASK BELOW TO INSTALL THE LE FLAP SAFETY LOCKS. THE LE FLAPS CAN MOVE QUICKLY IF YOU DO NOT INSTALL THE SAFETY LOCKS CORRECTLY. THIS CAN CAUSE INJURY TO PERSONS OR DAMAGE TO EQUIPMENT.

      1) Do the deactivation procedure of the Leading Edge Slats (AMM 27-81-00/201).
      2) Open the fueling door, 521QB (AMM 06-44-00/201).
      3) If the applicable gauge is operating correctly, use it to find the fuel quantity for the tank with the inoperative cockpit gauge.
      4) If the applicable gauge does not operate correctly, put an INOP placard on the P28 gauge.
      5) Close the fueling door, 521QB (AMM 06-44-00/201).

BOEING PROPRIETARY - Copyright (C) - Unpublished Work - See title page for details.

WARNING: YOU MUST CAREFULLY DO THE STEPS IN THE TASK BELOW TO REMOVE THE LE FLAP SAFETY LOCKS. THE LE FLAPS CAN MOVE QUICKLY IF YOU DO NOT DO THE STEPS CORRECTLY. THIS CAN CAUSE INJURY TO PERSONS OR DAMAGE TO EQUIPMENT.

6) Do the activation procedure of the Leading Edge Slats (AMM 27-81-00/201).
7) Tell the fuel crew that the automatic fueling shutoff may not operate correctly.

(b) Use the fuel measuring sticks to find the quantity (AMM 28-44-00/201):

(c) To compare the main tank fuel quantities with the fuel measuring sticks, do these steps:
1) Make the aircraft level (AMM 07-11-01/201).
2) Refuel the main tank with the operative fuel quantity indicator to the correct quantity (AMM 12-11-01/301).
3) Compare the fuel measuring sticks of the main fuel tanks.
4) Refuel the tank with the inoperative fuel indicating system to make the fuel measuring stick quantities of the main tanks agree (AMM 12-11-01/301).

(d) To add a known quantity of fuel, do these steps:
1) Defuel the fuel tank with the inoperative fuel indicating system (AMM 28-26-00/201).
2) Transfer a known fuel quantity back into the tank with the inoperative fuel indicating system.
a) Use the operative fuel quantity indicator from the tank you transfer fuel out of to find the correct fuel quantity.
b) Use the meter on the refueling truck to find the correct fuel quantity.

(e) To calculate the fuel quantity from the FMC, do the steps that follow:
1) Use the FMC CALCULATED fuel from the last flight for the total fuel quantity.
2) Subtract the total fuel (for the other two tanks) from the FMC CALCULATED total fuel.

S 869-235

(4) Do these steps to deactivate an inoperative Honeywell system Densitometer:

BOEING PROPRIETARY - Copyright (C) - Unpublished Work - See title page for details.

WARNING: USE THE PROCEDURE IN AMM 32-00-15/201 TO INSTALL THE DOOR LOCKS. THE DOORS OPEN AND CLOSE QUICKLY AND CAN CAUSE INJURY TO PERSONS OR DAMAGE TO EQUIPMENT.

(a) Open the doors for the landing gear and install the door locks (AMM 32-00-15/201).
(b) Open this circuit breaker, on the main power distribution panel, P6, and attach a circuit breaker lock:
1) 6E4, FUELING QTY
(c) Open these circuit breakers on the overhead circuit breaker panel, P11, and attach a circuit breaker lock:
1) 11C34, FUEL QTY 1
2) 11M19, FUEL QTY 2
(d) Open this circuit breaker, on the APU external power panel, P34, and attach a circuit breaker lock:
1) 34L2, FUEL QTY REFUEL
(e) Remove, cap and stow the electrical connector to the Densitometer Electronics Unit.
(f) Cap the electrical connector on the Densitometer Electronics Unit.
(g) Remove the circuit breaker lock on the main power distribution panel, P6, and close this circuit breaker:
1) 6E4, FUELING QTY
(h) Remove the circuit breaker locks on the overhead circuit breaker panel, P11, and close these circuit breakers:
1) 11C34, FUEL QTY 1
2) 11M19, FUEL QTY 2
(i) Remove the circuit breaker lock on the APU external power panel, P34, and close these circuit breaker:
1) 34L2, FUEL QTY REFUEL

WARNING: USE THE PROCEDURE IN AMM 32-00-15/201 TO REMOVE THE DOOR LOCKS. THE DOORS OPEN AND CLOSE QUICKLY AND CAN CAUSE INJURY TO PERSONS OR DAMAGE TO EQUIPMENT.

(j) Remove the door locks and close the landing gear doors. (AMM 32-00-15/201).

S 869-243
(5) Remove electrical power (AMM 24-22-00/201).

BOEING PROPRIETARY - Copyright (C) - Unpublished Work - See title page for details.

TASK 28-00-00-449-026

27. DDG 28-41-1 Restoration - Fuel Tank Quantity Indication System (Flight Deck) Inoperative

A. General

(1) This task restores the airplane with the Fuel Tank Quantity Indication System (Flight Deck) inoperative.

B. References

(1) AMM 24-22-00/201, Electrical Power Control
(2) FIM 28-41-00/101, Fuel Quantity Indicating System
(3) AMM 32-00-15/201, Landing Gear Door Locks

C. Access

(1) Location Zones

211 Control Cabin - Section 41 (Left)
212 Control Cabin - Section 41 (Right)
532 Main Tank - Inboard of Rib No. 10 (Left)
631 Center Auxiliary Tank (Right)
632 Main Tank - Inboard of Rib No. 10 (Right)

(2) Access Panels

521QB Fueling Station Door (Left)

D. Fuel Tank Quantity Indication System (Flight Deck) Restoration Procedure

S 869-236

(1) Supply electrical power, (AMM 24-22-00/201).

S 869-237

(2) To reactivate the center override tank fuel pumps, do these steps:

(a) Make sure all the fuel pump switchlights are in the off position on the overhead panel, P5.
(b) Remove the circuit breaker locks and close these circuit breakers on the main power distribution panel, P6:
1) 6F15, L FUEL OVRD PUMP
2) 6F21, R FUEL OVRD PUMP

S 869-238

(3) To reactivate the densitometer, do these steps:

WARNING: USE THE PROCEDURE IN AMM 32-00-15/201 TO INSTALL THE DOOR LOCKS. THE DOORS OPEN AND CLOSE QUICKLY AND CAN CAUSE INJURY TO PERSONS OR DAMAGE TO EQUIPMENT.

(a) Open the doors for the landing gear and install the door locks (AMM 32-00-15/201).

BOEING PROPRIETARY - Copyright (C) - Unpublished Work - See title page for details.

(b) Open this circuit breaker, on the main power distribution panel, P6, and attach a circuit breaker lock:
1) 6E4, FUELING QTY
(c) Open these circuit breakers on the overhead circuit breaker panel, P11, and attach a circuit breaker lock:
1) 11C34, FUEL QTY 1
2) 11M19, FUEL QTY 2
(d) Open this circuit breaker, on the APU external power panel, P34, and attach a circuit breaker lock:
1) 34L2, FUEL QTY REFUEL
(e) Install the electrical connector to the Densitometer Electronics Unit.
(f) Remove the circuit breaker lock on the main power distribution panel, P6, and close this circuit breaker:
1) 6E4, FUELING QTY
(g) Remove the circuit breaker locks on the overhead circuit breaker panel, P11, and close these circuit breakers:
1) 11C34, FUEL QTY 1
2) 11M19, FUEL QTY 2
(h) Remove the circuit breaker lock on the APU external power panel, P34, and close these circuit breaker:
1) 34L2, FUEL QTY REFUEL

WARNING: USE THE PROCEDURE IN AMM 32-00-15/201 TO REMOVE THE DOOR LOCKS. THE DOORS OPEN AND CLOSE QUICKLY AND CAN CAUSE INJURY TO PERSONS OR DAMAGE TO EQUIPMENT.

(i) Remove the door locks and close the landing gear doors. (AMM 32-00-15/201).

S 869-239
(4) Troubleshoot and repair the inoperative Fuel Tank Quantity Indication System.
(a) For fuel quantity indication system, do the Fault Isolation Procedure: Fuel Quantity BITE Test (FIM 28-41-00/101).
(b) Correct all faults identified by the BITE test.

S 449-240
(5) Remove the applicable placards from the refueling panel, P28, and the overhead panel, P28.

S 869-241
(6) Remove electrical power (AMM 24-22-00/201).

BOEING PROPRIETARY - Copyright (C) - Unpublished Work - See title page for details.

TASK 28-00-00-049-027

28. DDG 28-41-2 Preparation - Fuel Quantity Processor Channels Inoperative

A. General

(1) This task is for operation of the airplane with an inoperative Fuel Quantity Processor Channel.

(2) Review the DDG for applicable operational limits.

B. References

(1) AMM 06-44-00/201, Wings, Access Doors and Panels

(2) AMM 12-11-01/301, Fuel Tank Pressure Fueling

(3) AMM 24-22-00/201, Electrical Power Control

(4) AMM 28-44-00/201, Fuel Measuring Sticks

C. Access

(1) Location Zones

211 Control Cabin -Section 41 (Left)

212 Control Cabin -Section 41 (Right)

(2) Access Panels

521QB Fueling Station Door (Left)

D. Fuel Quantity Processor Channel Deactivation Procedure

S 869-217

(1) Supply electrical power (AMM 24-22-00/201).

S 869-218

(2) Close these circuit breakers on the main power distribution panel, P6:

(a) A001, Battery

(b) G009, Right DC Bus

S 869-219

(3) Make sure the refueling door, 521QB, is closed.

S 869-220

(4) Make sure these EICAS circuit breakers on the overhead circuit breaker panel, P11, are closed:

(a) 11J02, EICAS INSTR CMPTR L

(b) 11J03, EICAS UPR DSPL

(c) 11J29, EICAS INSTR CMPTR R

(d) 11J30, EICAS LWR DSPL

(e) 11J32, EICAS INSTR EICAS DSPL SEL

S 869-221

(5) Push the ECS/MSG switch on the right side panel, P61.

BOEING PROPRIETARY - Copyright (C) - Unpublished Work - See title page for details.

S 869-222

(6) If the EICAS message FUEL QTY BITE shows after you push the ECS/MSG switch, do these steps:

(a) Do a check of the fault codes to find out which channels are inoperative.

(b) If the fault codes A and B are shown, channels 1 and 2 have faults.

NOTE: The faults must be corrected before the airplane can be released for flight.

(c) If the fault codes are: A only, B only, D only, A and D, or B and D, you do not need to correct the faults before you release the airplane to fly.

(d) If codes A1 through A9 show (the fault is in channel 1), do these steps:

1) Open this circuit breaker on the overhead circuit breaker panel, P11, and attach a circuit breaker lock:

a) 11C34, FUEL QTY 1

2) Open this circuit breaker on the APU external power panel, P34, and attach a circuit breaker lock:

a) 34L2, FUEL QTY REFUEL

(e) If codes B1 through B9 show (the fault is in channel 2), do these steps:

1) Open this circuit breaker on the overhead circuit breaker panel, P11, and attach a circuit breaker lock:

a) 11M19, FUEL QTY 2

2) Open this circuit breaker on the main power distribution panel, P6, and attach a circuit breaker lock:

a) 6E4, FUELING QTY

(f) If codes D1 through D9 show, the fault is in the densitometer.

NOTE: You do not need to correct the densitometer faults before you release the airplane to fly.

(g) Repeat the test to do a check for the EICAS message, FUEL QTY BITE, before each flight until all the faults are corrected.

1) Make sure there are no new fuel quantity faults before each flight.

BOEING PROPRIETARY - Copyright (C) - Unpublished Work - See title page for details.

S 869-223

(7) If the EICAS message, FUEL QTY BITE, does not show after you push the ECS/MSG switch, do these steps:

NOTE: It is recommended to this test with less than 15,000 lbs (6,800 kgs) total fuel in the fuel tanks.

(a) Open these circuit breakers on the overhead circuit breaker panel, P11:
1) 11C34 FUEL QTY 1
2) 11M19, FUEL QYT 2

(b) Make sure there is no fuel quantity indication on the fuel quantity module gages on the pilots overhead panel, P5.

(c) If there is fuel quantity shown on the fuel quantity module gauges on the overhead panel, P5, make sure the refueling door, 521QB is closed (AMM 06-44-00/201).

(d) Close this circuit breaker on the overhead circuit breaker panel, P11:
1) 11C34 FUEL QTY 1

(e) Wait 10 seconds, then record the fuel quantity for each fuel tank.

NOTE: This tests channel 1.

(f) Open this circuit breaker on the overhead circuit breaker panel, P11:
1) 11C34, FUEL QTY 1

(g) Close this circuit breaker on the overhead circuit breaker panel, P11:
1) 11M19, FUEL QTY 2

(h) Wait 10 seconds, then record the fuel quantity for each fuel tank.

NOTE: This tests channel 2.

(i) Open this circuit breaker on the overhead circuit breaker panel, P11:
1) 11M19, FUEL QTY 2

(j) Compare the fuel quantities recorded for channel 1 and channel 2.
1) If the fuel quantities differ by more than 400 lbs (180kgs) for any fuel tank, do these steps for that tank:
a) Find the fuel quantity with the fuel measuring sticks (AMM 28-44-00/201).
b) Use the fuel channel that shows the correct quantity.

BOEING PROPRIETARY - Copyright (C) - Unpublished Work - See title page for details.

(k) Deactivate the fuel channel that does not show the correct quantity.
(l) To deactivate channel 1, do these steps:
1) Open this circuit breaker on the overhead circuit breaker panel, P11, and attach a circuit breaker lock:
a) 11C34, FUEL QTY 1
2) Open this circuit breaker on the APU external power panel, P34, and attach a circuit breaker lock:
a) 34L2, FUEL QTY REFUEL
(m) To deactivate channel 2, do these steps:
1) Open this circuit breaker on the overhead circuit breaker panel, P11, and attach a circuit breaker lock:
a) 11M19, FUEL QTY 2
2) Open this circuit breaker on the APU external power panel, P34, and attach a circuit breaker lock:
a) 6E4, FUELING QTY

S 869-224
(8) Refuel the airplane and use normal procedures (AMM 12-11-01/301).

NOTE: Do not use battery power to refuel if one of the fuel quantity channels is inoperative.

S 869-225
(9) If one of the fuel quantity channels is inoperative, do these steps after you refuel the airplane:
(a) Make sure the refueling door, 521QB is closed (AMM 06-44-00/201).
(b) Open and the applicable circuit breaker, on the overhead circuit breaker panel, P11, for the fuel quantity channel that is in use.
1) 11C34, FUEL QTY 1
2) 11M19, FUEL QTY 2
(c) Wait 10 seconds and close the applicable circuit breaker, on the overhead circuit breaker panel, P11, for the fuel quantity channel that is in use.
1) 11C34, FUEL QTY 1
2) 11M19, FUEL QTY 2
(d) Find the fuel quantity in each fuel tank with the measuring sticks (AMM 28-44-00/201).
(e) Compare the fuel quantities from the measuring sticks with the fuel quantities indicated on the fuel gauges on the pilots overhead panel, P5.

BOEING PROPRIETARY - Copyright (C) - Unpublished Work - See title page for details.

(f) The operating fuel channel must show fuel quantities that agree with the measuring stick quantities to these tolerances.
1) Main fuel tank, +/- 1100lbs (500kgs)
2) Center fuel tank
Zero bay, +/- 900lbs (400kgs)
Two bay, +/- 1600lbs (700kgs)
Four bay, +/- 2100lbs (1000kgs)

S 049-226
(10) Put a PROCESSOR CHANNEL INOP placard on the fuel quantity module on the overhead panel, P5.

S 869-227
(11) Remove electrical power (AMM 24-22-00/201).

TASK 28-00-00-449-028
29. DDG 28-41-2 Restoration - Fuel Quantity Processor Channels Inoperative
A. General
(1) This task restores the airplane with an inoperative Fuel Quantity Processor Channel.
B. References
(1) AMM 24-22-00/201, Electrical Power Control
(2) FIM 28-41-00/101, Fuel Quantity Indicating System
C. Access
(1) Location Zones
211 Control Cabin -Section 41 (Left)
212 Control Cabin -Section 41 (Right)

(2) Access Panels
521QB Fueling Station Door (Left)

D. Fuel Quantity Processor Channel Restoration Procedure

S 869-228
(1) Supply electrical power (AMM 24-22-00/201).

S 869-232
(2) Remove the applicable circuit breaker locks and close the applicable circuit breakers:
(a) On the main power distribution panel, P6:
1) 6E4, FUELING QTY
(b) On the overhead circuit breaker panel, P11:
1) 11C34, FUEL QTY 1
2) 11M19, FUEL QTY 2
(c) On the APU external power panel, P34:
1) 34L2, FUEL QTY REFUEL

BOEING PROPRIETARY - Copyright (C) - Unpublished Work - See title page for details.

S 869-229
(3) Troubleshoot and repair the inoperative Fuel Quantity Processor Channel.
(a) For fuel quantity processor channel, do the Fault Isolation Procedure: Fuel Quantity BITE Test (FIM 28-41-00/101).
(b) Correct all faults identified by the BITE test.

S 449-230
(4) Remove the PROCESSOR CHANNEL INOP placard on the Fuel Quantity Module on the overhead panel, P5.

S 869-231
(5) Remove electrical power (AMM 24-22-00/201).

TASK 28-00-00-049-029
30. DDG 28-41-6 Preparation - Fuel Quantity Indications (Fueling Panel) Inoperative
A. General
(1) This task is for operation of the airplane with an inoperative fuel quantity indicating system (Fueling Panel, P28).
(2) Review the DDG for applicable operational limits.
B. References
(1) AMM 12-11-01/301, Fuel Tank Pressure Fueling
(2) AMM 24-22-00/201, Electrical Power Control
(3) AMM 27-81-00/201, Leading Edge Slat System
(4) AMM 28-26-00/201, Defueling
(5) AMM 28-44-00/201, Fuel Measuring Stick
C. Access
(1) Location Zones
211 Control Cabin -Section 41 (Left)
212 Control Cabin -Section 41 (Right)
521 Leading Edge to Front Spar (Left)

(2) Access Panels
521QB Fueling Station Door (Left)

D. Fuel Quantity Indicating System (FQIS), Refueling Station Inoperative Procedure

S 869-192
(1) Supply electrical power (AMM 24-22-00/201).

BOEING PROPRIETARY - Copyright (C) - Unpublished Work - See title page for details.

S 489-193

WARNING: YOU MUST CAREFULLY DO THE STEPS IN THE TASK BELOW TO INSTALL THE LE FLAP SAFETY LOCKS. THE LE FLAPS CAN MOVE QUICKLY IF YOU DO NOT INSTALL THE SAFETY LOCKS CORRECTLY. THIS CAN CAUSE INJURY TO PERSONS OR DAMAGE TO EQUIPMENT.

(2) Do the deactivation procedure of the Leading Edge Slats (AMM 27-81-00/201).

S 869-194

(3) Refuel the airplane and use one of the subsequent procedures to find the fuel quantity for each fuel tank with an inoperative indicator on the refueling panel, P28.

NOTE: The automatic fueling shutoff and overfill protection may not operate. Be sure to stop the refueling when the correct fuel level is in each tank.

(a) Refuel the fuel tanks and use the fuel quantity indicators on the overhead panel, P5, to find the fuel quantity (AMM 12-11-01/301).

(b) Refuel the fuel tanks and use the fuel quantity measuring sticks to find the fuel quantity (AMM 12-11-01/301, AMM 28-44-00/201).

(c) Do the subsequent steps to use a fuel-tank-to-fuel-tank transfer method to find the fuel quantity:

1) Transfer the fuel from the tank with the inoperative indicator to a fuel tank(s) with an operating indicator. (AMM 28-26-00/201).

a) Make sure that fuel tank(s) that the fuel will be transferred to have enough capacity for the fuel.

2) Make sure all the fuel is transferred out of the fuel tank with the inoperative fuel quantity indicator.

3) Transfer a known fuel quantity back into the fuel tank with the inoperative fuel indicator.

a) Use the indicator from the tank(s) used to store the transferred fuel to find when the correct quantity of fuel has been put back into the tank with the inoperative indicator.

BOEING PROPRIETARY - Copyright (C) - Unpublished Work - See title page for details.

b) If you do not want to re-transfer the fuel, you can use the pressure refuel method to refuel the tank.

NOTE: Use the meter on the refueling truck to find the correct quantity (AMM 12-11-01/301).

4) Use the pressure refuel method to fill the other fuel tanks to the correct quantity. (AMM 12-11-01/301).

S 049-195

(4) Put an INOP placard on the inoperative fuel quantity indicator(s) on the refueling panel, P28.

S 489-196

WARNING: YOU MUST CAREFULLY DO THE STEPS IN THE TASK BELOW TO REMOVE THE LE FLAP SAFETY LOCKS. THE LE FLAPS CAN MOVE QUICKLY IF YOU DO NOT DO THE STEPS CORRECTLY. THIS CAN CAUSE INJURY TO PERSONS OR DAMAGE TO EQUIPMENT.

(5) Do the activation procedure of the Leading Edge Slats (AMM 27-81-00/201).

TASK 28-00-00-449-030

31. DDG 28-41-6 Restoration - Fuel Quantity Indications (Fueling Panel) Inoperative

A. General

(1) This task restores the airplane with an inoperative fuel quantity indicating system (refueling panel, P28).

B. References

(1) AMM 06-44-00/201, Wings, Access Doors and Panels
(2) AMM 24-22-00/201, Electrical Power Control
(3) AMM 27-81-00/201, Leading Edge Slat System
(4) FIM 28-41-00/101, Fuel Quantity Indicating System

C. Access

(1) Location Zones

211 Control Cabin -Section 41 (Left)
212 Control Cabin -Section 41 (Right)
521 Leading Edge to Front Spar (Left)

(2) Access Panels

521QB Fueling Station Door (Left)

BOEING PROPRIETARY - Copyright (C) - Unpublished Work - See title page for details.

D. Fuel Quantity Indicating System (FQIS), Refueling Station Restoration Procedure

S 869-197
(1) Supply electrical power (AMM 24-22-00/201).

S 489-198

WARNING: YOU MUST CAREFULLY DO THE STEPS IN THE TASK BELOW TO INSTALL THE LE FLAP SAFETY LOCKS. THE LE FLAPS CAN MOVE QUICKLY IF YOU DO NOT INSTALL THE SAFETY LOCKS CORRECTLY. THIS CAN CAUSE INJURY TO PERSONS OR DAMAGE TO EQUIPMENT.

(2) Do the deactivation procedure of the Leading Edge Slats (AMM 27-81-00/201).

S 869-199
(3) Open the refueling station door, 521QB (AMM 06-44-00/201).

S 869-200
(4) Make sure the fuel quantity is on for the applicable fuel tank, on the refueling panel, P28.

S 819-201
(5) Troubleshoot and repair the inoperative fuel quantity indication.
(a) Push the IND TEST switch to test the fuel quantity indicating displays.
(b) Do the Fuel Quantity Bite Procedure (FIM 28-41-00/101).
(c) Do the fault isolation procedure(s) for the maintenance messages that show for the FQIS.

S 449-202
(6) Remove the INOP placard on the fuel quantity indicator(s) on the refueling panel, P28.

S 489-203

WARNING: YOU MUST CAREFULLY DO THE STEPS IN THE TASK BELOW TO REMOVE THE LE FLAP SAFETY LOCKS. THE LE FLAPS CAN MOVE QUICKLY IF YOU DO NOT DO THE STEPS CORRECTLY. THIS CAN CAUSE INJURY TO PERSONS OR DAMAGE TO EQUIPMENT.

(7) Do the activation procedure of the Leading Edge Slats (AMM 27-81-00/201).

BOEING PROPRIETARY - Copyright (C) - Unpublished Work - See title page for details.

S 869-204
(8) Remove electrical power (AMM 24-22-00/201).

TASK 28-00-00-049-031
32. DDG 28-42-1 Preparation - Fuel Pump Low PRESS Lights Inoperative
A. General
(1) This task is for operation of the airplane with an inoperative Fuel Pump Low PRESS light(s).
(2) Review the DDG for applicable operational limits.
B. References
(1) AMM 06-44-00/201, Wings, Access Doors and Panels
(2) AMM 24-22-00/201, Electrical Power Control
C. Access
(1) Location Zones
211 Control Cabin -Section 41 (Left)
212 Control Cabin -Section 41 (Right)

(2) Access Panels
521QB Fueling Station Door (Left)

D. Fuel Pump Low PRESS light Deactivation Procedure

S 869-205
(1) Supply electrical power (AMM 24-22-00/201).

S 869-206
(2) To do a check of the main tank fuel pumps, do these steps:
(a) Put the crossfeed valve control switch, on the overhead panel, P5, to the CLOSED position.
(b) Put the fuel boost pump and override pump control switches, on the overhead panel, P5, to the OFF position.
(c) Make sure the L(R) FUEL SYS PRESS Caution message shows on the EICAS monitor.
(d) For an inoperative Low PRESS light on the left side, do these steps:
1) Move the L Fwd and Aft main boost pumps control switches, on the overhead panel, P5, to the ON position.
2) Make sure the L FUEL SYS PRESS Caution message does not show on the EICAS monitor.
3) Make sure the "L FWD(AFT) FUEL PUMP" Advisory message does not show on the EICAS Monitor.
4) Make sure the CTR L FUEL PUMP Advisory message does not show on the EICAS Monitor.

BOEING PROPRIETARY - Copyright (C) - Unpublished Work - See title page for details.

(e) For an inoperative low PRESS light on the right side, do these steps:
1) Move the R Fwd and Aft main boost pumps control switches, on the overhead panel, P5, to the ON position.
2) Make sure the R FUEL SYS PRESS Caution message does not show on the EICAS monitor.
3) Make sure the R FWD (AFT) FUEL PUMP Advisory message does not show on the EICAS Monitor.
4) Make sure the CTR R FUEL PUMP Advisory message does not show on the EICAS Monitor.

(f) For each inoperative main fuel pump low PRESS light, do these steps:

NOTE: Complete this check for each pump before you do the check on a subsequent pump.

1) Put the fuel pump control switch, on the overhead panel, P5, for the applicable low PRESS light to the OFF position.
2) Make sure the applicable FUEL PUMP Advisory message shows on the EICAS monitor.
3) Put the fuel pump control switch, on the overhead panel, P5, for the applicable low PRESS light to the ON position.
4) Make sure the applicable FUEL PUMP Advisory message does not show on the EICAS monitor.

S 869-207

(3) To do a check of the center tank override fuel pumps, do these steps:
(a) Put the crossfeed valve control switch, on the overhead panel, P5, to the CLOSED position.
(b) Put the fuel boost pump and override pump control switches, on the overhead panel, P5, to the OFF position.
(c) Make sure the L(R) FUEL SYS PRESS Caution message shows on the EICAS monitor.
(d) For an inoperative low PRESS light on the left side, do these steps:
1) Move the L Fwd and Aft main boost pumps control switches, on the overhead panel, P5, to the ON position.
2) Move the L Override boost pumps control switch, on the overhead panel, P5, to the ON position.
3) Make sure the L FUEL SYS PRESS Caution message does not show on the EICAS monitor.
4) Make sure the CTR L FUEL PUMP Advisory message shows on the EICAS Monitor.
5) Open the fueling panel door, 521QB (AMM 06-44-00/201).

BOEING PROPRIETARY - Copyright (C) - Unpublished Work - See title page for details.

6) Make sure the CTR L FUEL PUMP Advisory message does not show on the EICAS Monitor.
7) Close the fueling panel door, 521QB (AMM 06-44-00/201).

(e) For an inoperative low PRESS light on the right side, do these steps:
1) Move the R Fwd and Aft main boost pumps control switches, on the overhead panel, P5, to the ON position.
2) Move the R Override boost pumps control switch, on the overhead panel, P5, to the ON position.
3) Make sure the R FUEL SYS PRESS Caution message does not show on the EICAS monitor.
4) Make sure the CTR R FUEL PUMP Advisory message shows on the EICAS Monitor.
5) Open the fueling panel door, 521QB (AMM 06-44-00/201).
6) Make sure the CTR R FUEL PUMP Advisory message does not show on the EICAS Monitor.
7) Close the fueling panel door, 521QB (AMM 06-44-00/201).

S 049-208

(4) Put an LIGHT INOP placard on the inoperative fuel pump PRESS switchlight(s) on the overhead panel, P5.

S 869-209

(5) Remove electrical power (AMM 24-22-00/201).

TASK 28-00-00-449-032

33. DDG 28-42-1 Restoration - Fuel Pump Low PRESS Lights Inoperative

A. General
(1) This task restores the airplane with an inoperative Fuel Pump Low PRESS light(s).

B. References
(1) AMM 06-44-00/201, Wings, Access Doors and Panels
(2) AMM 24-22-00/201, Electrical Power Control
(3) FIM 28-22-00/101, Engine Fuel Feed System

C. Access
(1) Location Zones
211 Control Cabin -Section 41 (Left)
212 Control Cabin -Section 41 (Right)

(2) Access Panels
521QB Fueling Station Door (Left)

D. Fuel Pump Low PRESS light Restoration Procedure

S 869-210

(1) Supply electrical power (AMM 24-22-00/201).

BOEING PROPRIETARY - Copyright (C) - Unpublished Work - See title page for details.

S 869-211
(2) Make sure the L(R) Fwd and Aft main boost pumps control switches, on the overhead panel, P5, are in the OFF position.

S 869-212
(3) Make sure the L(R) Override boost pumps control switches, on the overhead panel, P5, are in the OFF position.

S 819-213
(4) Troubleshoot and repair the inoperative fuel pump low PRESS light(s).
(a) For main tank fuel pump low PRESS lights, do the Fault Isolation Procedure: Boost Pump Low Pressure Light On, EICAS Message displayed (FIM 28-22-00/101).
(b) For center tank fuel pump low PRESS lights, do the Fault Isolation Procedure: Center Boost Pump Low Pressure Light On, EICAS "CTR (L,R) FUEL PUMP" Message displayed (FIM 28-22-00/101).

S 449-214
(5) Remove the LIGHT INOP placard on the inoperative fuel pump low PRESSlLight(s) on the overhead panel, P5.

S 869-216
(6) Remove electrical power (AMM 24-22-00/201).

BOEING PROPRIETARY - Copyright (C) - Unpublished Work - See title page for details.

MICROBIAL GROWTH - MAINTENANCE PRACTICES

1. General
   A. This procedure contains these tasks:
      (1) Detection Test for Microbial Growth
      (2) Treatment of Fuel Tanks Contaminated With Microbial Growth
      (3) Biocide Treatment of Fuel Tanks - Metered Injection Cart
      (4) Biocide Treatment of Fuel Tanks - Overwing Fill Port
      (5) Microbial Growth Removal - Manual Removal Method
      (6) Microbial Growth Removal - Pressure Washer Method
   B. Contamination in fuel tanks and structural corrosion can result from the presence of microorganisms, which live and multiply at the interface of fuel and water.
   C. Figure 201 provides an overview of actions necessary to detect, treat and remove microbial contamination. CPM 20-62-00, Preventative Methods, gives more information about microbial growth and the microbial growth prevention program.

TASK 28-10-00-202-001

2. Detection Test for Microbial Growth (Fig. 201)
   A. General
      (1) Use a microbial detection kit or laboratory standard test to check the fuel/water samples taken from each fuel tank. A positive result for microbial contamination requires action that may include a biocide treatment or physical removal of the growth from the fuel tanks.
      (2) These are the approved test kits:
         (a) FUELSTAT
         (b) Easicult Combi
         (c) MicrobMonitor 2
         (d) HY-LiTE Jet A-1 Fuel Test
         (e) The fuel samples can also be sent to a laboratory for testing. IP385 is the Institute for Petroleum's test for microbial contamination.
      (3) All instructions supplied with the detection kits should be followed closely. It is important to retest if a detection test shows microbial contamination. Differences in the fuel/water sample and the ability of the detection kits to consistently measure the level of microbial growth make it important to retest and verify test results. Do not compare the test results between the different types of detection kits.
      (4) All time intervals listed in this task are recommendations. There is no MMEL or scheduled maintenance requirements for testing for microbial contamination.
   B. References
      (1) AMM 06-41-00/201, Fuselage Access Panels and Doors
      (2) AMM 12-11-03/301, Fuel Tank Sumping

BOEING PROPRIETARY - Copyright (C) - Unpublished Work - See title page for details.

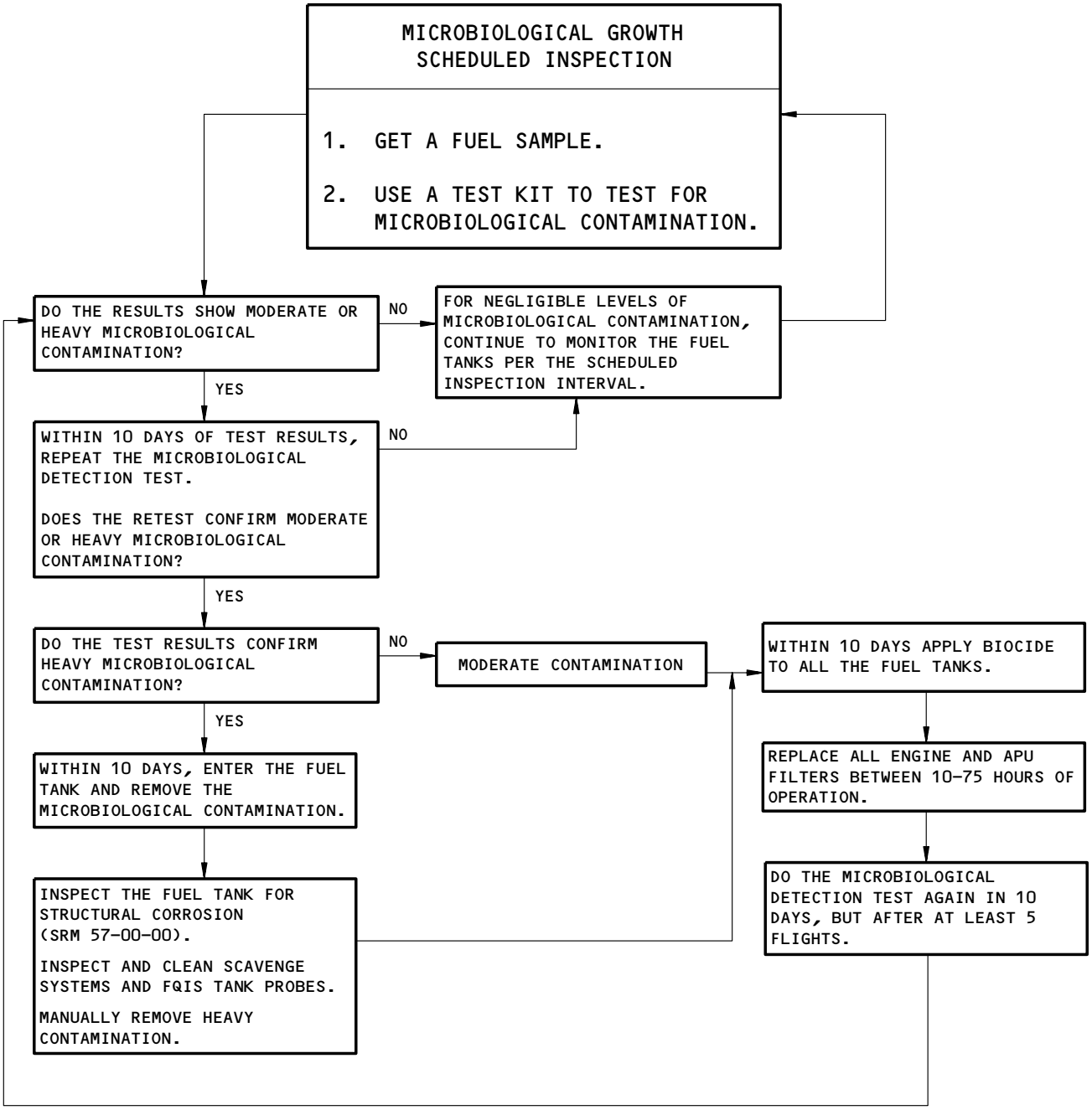

NOTE: IF THE DETECTION TEST SHOWS MICROBIAL GROWTH, THEN DO THE SCHEDULED INSPECTION TEST MORE OFTEN.

NOTE: AFTER A TREATMENT WITH BIOCIDE, DON'T TEST AGAIN UNTIL YOU FLY AT LEAST 5 FLIGHTS. THIS IS TO MAKE SURE THE FUEL TREATED WITH BIOCIDE IS FULLY REMOVED FROM THE FUEL TANKS BEFORE THE NEXT TEST.

NOTE: IF THE BIOCIDE TREATMENT IS NOT EFFECTIVE USING A 1/3 FUEL LOAD, USE A BIOCIDE TREATMENT WITH A FULL FUEL LOAD AND USE THE MAXIMUM SOAK TIME. THE CONTAMINATION MAY BE TOWARDS THE TOP OF THE TANK.

Microbial Growth - In Fuel Tanks
Figure 201

BOEING PROPRIETARY - Copyright (C) - Unpublished Work - See title page for details.

(3) CPM 20-62-00, Preventative Methods

C. Equipment

(1) Microbial Contamination Test Kits:
Use one of these:

(a) MicrobMonitor2
Hemel Hempstead, UK
Tel: +44 (0) 1442 225711
Fax: +44 (0) 1442 223960
Email: microbmonitor2@bp.com

(b) Fuelstat Resinae
Conidia Bioscience (Manufacturer)
Bakeham Lane, Egham, Surrey, TW20 9TY, UK
Tel: +44 (0) 1491 829012
Fax: +44 (0) 1491 829100
Email: info@conidia.com
or
SATAIR A/S - Amagerlandevej 147A, 2770 Kastrup, Denmark
SATAIR USA Inc - 4260 Frontage Rd, Atlanta, Georgia USA
SATAIR ASIA PTE Ltd - 8 Loyang Link, Singapore
Transworld Aviation Ltd - Jebel Ali Free Zone, Dubai, UAE

(c) Easicult Combi
Orion Diagnostica (Manufacturer)
P.O. Box 83, 02101 Espoo, Finland

Tel: 358-9-429-2888
Fax: 358-9-429-2794
or
Metalworking Chemicals & Equipment Co., Inc
P.O. Box 990, 34 Main Street, Lake Placid
New York USA 12946
Tel: (518) 523-2355
Fax: (518) 523-2821

(d) FQS HY-LiTE Jet A-1 Fuel Test
Merck KGaA, Germany
Distributor: Fuel Quality Services Inc.
P.O. Box 1380
Flowery Branch, GA 30542
Tel USA: 1-800-827-9790
Fax USA: 770-967-9982
www.fqsinc.com

(2) Use one of these:

(a) Fuel Sampling Kit, P/N 100-1028-04 (or equivalent)
Shaw Aero Devices, Inc.
3580 Shaw Boulevard
Naples, Florida 34117-8408
Tel: (941) 304-1000
Fax: (941) 304-1088
Email: www.shawaero.com

(b) A12001-14 Fuel Sampling Equipment

(3) Fuel sample bottle - glass or fuel-resistant plastic

BOEING PROPRIETARY - Copyright (C) - Unpublished Work - See title page for details.

(4) Protective equipment:
(a) Eye protection
(b) Clean fuel resistant gloves
(c) Clean protective outerwear.

D. Consumable Materials
(1) B00130 Alcohol - Isopropyl, to clean the equipment
(2) G00034 Cotton Wiper, Process Cleaning Absorbent Wiper (cheesecloth, gauze) BMS15-5

E. Access
(1) Location Zones
193 Wing to Body - Forward Lower Half (Left)
194 Wing to Body - Forward Lower Half (Right)
500 Main Tank (Left)
600 Main Tank (Right)
531 Center Auxiliary Tank (Left)
631 Center Auxiliary Tank (Right)

(2) Access Panels
193SLX Fuel Sump Drain Door (Left)
194QRX Fuel Sump Drain Door (Right)

F. Clean the Fuel Sampling Equipment

S 282-002
(1) You must wear protective equipment when you clean, sample and test for microbial growth. Protective equipment includes:
(a) Eye protection
(b) Clean fuel resistant gloves
(c) Clean protective outerwear.

S 282-003
(2) Do these steps to clean the fuel sampling equipment:
(a) Mix a solution of one part tap water to three to four parts isopropyl alcohol.
(b) Clean these items with the alcohol solution:
1) Sump drain tool
2) Sump drain container
3) Fuel sample container (if reused)
(c) Air dry the fuel sampling equipment.
(d) Make sure the fuel sampling equipment is free from residue alcohol.
(e) Protect the containers from contamination.

S 282-004
(3) Do these steps to clean the sump drain area:
(a) Mix a solution of one part water to three to four parts isopropyl alcohol.
(b) Thoroughly clean the exterior area of the fuel sump drain with the alcohol solution.
(c) Air dry the sump area.
(d) Repeat for each sump drain.

BOEING PROPRIETARY - Copyright (C) - Unpublished Work - See title page for details.

G. Collect the Fuel Sample

S 282-005

(1) Make sure the sump drain container and the fuel sample container are clean and dry.

S 282-006

(2) Do these steps to collect a fuel sample:

NOTE: Each fuel sample must be collected separately for each fuel tank and stored in separate sample containers.

(a) Use the fuel sump drain to get a fuel sample (AMM 12-11-03/301).
(b) Fill the sump drain container with approximately one quart (one liter) of fuel.
(c) If possible, make sure the fuel sample contains some visible water (free water) and some fuel.
(d) Pour the fuel from the sump drain container into the fuel sample container.
(e) Do not add any additives, such as food coloring, to identify the presence of water.

S 282-007

(3) After you collect the fuel sample, do these steps:
(a) Install the cover on the sample container.
(b) Label each fuel sample with a date, airplane and fuel tank identification.
(c) Protect the fuel samples from contamination.

S 282-008

(4) Continue to collect fuel samples for the remaining tanks.
(a) Clean the fuel sampling equipment again before you collect a new sample.
(b) Make sure to collect a fuel sample from each tank.

H. Microbial Growth Detection Test

S 282-009

(1) Test the sample within 6 hours of collection if possible, but no more than 24 hours after collection.

NOTE: After you collect the fuel sample, any microbial growth in the sample will start to die.

BOEING PROPRIETARY - Copyright (C) - Unpublished Work - See title page for details.

S 282-010
(2) Use one of the approved test kits to test the fuel samples.

S 282-011
(3) Follow all instructions supplied with the test kit.

NOTE: Some test kits will not function correctly if fuel is tested. Even traces of fuel can coat the test slide and prevent the microbes from growing. Other test kits can test either fuel or free water, but free water is recommended.

I. Initial Test Results

S 282-012
(1) Use the data supplied with the test kit to define the level of microbial growth:
(a) Negligible contamination
(b) Moderate contamination
(c) Heavy contamination

S 282-013
(2) If the test confirms negligible levels of contamination, then do these steps:
(a) Continue with the usual operations.
(b) Continue to test the aircraft at the usual intervals.

S 282-014
(3) If the initial test results are positive for moderate or heavy levels of microbial contamination, then do these steps:
(a) Within 10 days (after receipt of test results) get a new fuel sample.
(b) Repeat the microbial detection test with the same test method.
(c) Confirm the level of microbial contamination.

J. Retest Results

S 282-015
(1) If the retest confirms negligible levels of microbial contamination, then do these steps:
(a) Continue with the usual operations.
(b) Continue to test the aircraft at the usual intervals.

BOEING PROPRIETARY - Copyright (C) - Unpublished Work - See title page for details.

S 282-016

(2) If the retest confirms moderate levels of microbial contamination, then do these steps:
   (a) Within 10 days (after receipt of test results) schedule a biocide treatment to kill the microbial growth.
   (b) Do the subsequent task for moderate levels of contamination.

S 282-017

(3) If the retest confirms heavy levels of microbial contamination, then do these steps:
   (a) Within 10 days (after receipt of test results) schedule a task to go into the fuel tank(s) to inspect and remove the microbial growth.
   (b) Do the subsequent task for heavy levels of microbial contamination.

TASK 28-10-00-602-018

3. Treatment of Fuel Tanks Contaminated With Microbial Growth (Fig. 201)

A. General
   (1) A positive result for moderate or heavy levels of microbial contamination requires action that may include a biocide treatment or physical removal of the growth from the fuel tanks.
   (2) All time intervals listed in this task are recommendations. There is no MMEL or scheduled maintenance requirements for testing for microbial contamination.

B. References
   (1) AMM 12-11-03/301, Fuel Tank Sumping
   (2) AMM 28-11-00/201, Fuel Tank
   (3) AMM 28-26-00/201, Defuel
   (4) AMM 49-31-00/201, APU Engine Fuel System
   (5) AMM 49-31-04/401, APU Fuel Filter
   (6) AMM 73-11-02/401, Engine Fuel Filter
   (7) SRM 51-00-00
   (8) SRM 57-00-00, Wings

C. Equipment
   (1) Protective outer clothing to prevent skin contact with microbial contamination:
      (a) Fuel and solvent resistant gloves
      (b) Saranex suit
      (c) Neoprene boots
      (d) Respirator - Half face canister style respirators (minimum), U.S. Bureau of Mines Approved or equivalent

BOEING PROPRIETARY - Copyright (C) - Unpublished Work - See title page for details.

D. Access

(1) Location Zones

136	Enviromental Control System Bay (Right)
193	Wing to Body - Forward Lower Half (Left)
194	Wing to Body - Forward Lower Half (Right)
500	Main Tank (Left)
600	Main Tank (Right)
531	Center Auxiliary Tank (Left)
631	Center Auxiliary Tank (Right)

(2) Access Panels

136KZ	Auxiliary Tank Access Door (Center)
193SLX	Fuel Sump Drain Door (Left)
194HR	Pressure Relief Door (Right)
194QRX	Fuel Sump Drain Door (Right)
531BB	Auxiliary Tank Access Door (Left)
631BB	Auxiliary Tank Access Door (Right)
532BB thru 541XB	Fuel Tank Access Doors, Left
632BB thru 641XB	Fuel Tank Access Doors, Right

E. Treatment of Fuel Tanks with Moderate Levels of Microbial Contamination

NOTE: It is recommended to apply biocide to all tanks within 10 days after positive results for moderate levels of microbial contamination.

S 622-019

(1) Within 10 days (after receipt of positive test results) do these steps:
   (a) Do a biocide treatment for all of the fuel tanks.
   (b) Return the airplane to service.
   (c) Make sure all of the biocide treated fuel has been burned through the engines (a minimum of five flights).
   (d) After 10 to 75 hours replace these filters:
      1) Engine fuel filters (AMM 73-11-02/401)
      2) APU fuel filter (AMM 49-31-04/401).

S 622-020

(2) After the biocide treatment do these steps:
   (a) Wait for 10 days after the biocide treatment.
   (b) Get a new fuel sample for each tank.
   (c) Do the microbial growth detection test again.

BOEING PROPRIETARY - Copyright (C) - Unpublished Work - See title page for details.

(d) If the tests show that the biocide treatment was not successful, do these steps:
1) Completely fill the fuel tanks with biocide treated fuel.
2) Use the maximum soak time:
a) Biobor JF - 72 Hours
b) Kathon FP 1.5 - 24 Hours

(e) If the tests show that the biocide treatment was successful, then continue to test the aircraft at the usual intervals.

F. Treatment of Fuel Tanks with Heavy Levels of Microbial Contamination

NOTE: If the detection test (and retest) confirms heavy levels of microbial contamination, then do this procedure. It is recommended to do a fuel tank entry within 10 days after positive results for heavy levels of microbial contamination.

S 622-021

(1) Within 10 days (after receipt of test results) schedule a task to inspect the fuel tank(s) for microbial growth.

S 622-022

(2) Do these steps to prepare for the fuel tank inspection:

WARNING: CAREFULLY DO ALL THE SAFETY PROCEDURES TO GO INTO A FUEL TANK. INJURY TO PERSONS AND DAMAGE TO EQUIPMENT CAN OCCUR IF YOU DO NOT OBEY THE SAFETY PROCEDURES.

(a) Defuel and drain the applicable fuel tank(s) (AMM 28-26-00/201).
(b) Prepare for a fuel tank entry (AMM 28-11-00/201).
(c) Make sure the fuel tank has a sufficient flow of air.

WARNING: WEAR AN APPROVED RESPIRATOR AND PROTECTIVE CLOTHING BEFORE YOU ENTER A FUEL TANK CONTAMINATED WITH MICROBIAL GROWTH. IF YOU BREATHE AIR CONTAMINATED WITH MICROBIAL GROWTH RESIDUE OR ALLOW THE MICROBIAL GROWTH TO TOUCH YOUR SKIN, POSSIBLE HEALTH PROBLEMS CAN OCCUR.

(d) Put on this protective gear to prevent contact with microbial growth:
1) Respirator - Half face canister style respirators (minimum)
2) Eye protection
3) Fuel resistant gloves
4) Saranex suit
5) Neoprene boots

(e) Go into the fuel tank (AMM 28-11-00/201).

BOEING PROPRIETARY - Copyright (C) - Unpublished Work - See title page for details.

S 212-023

(3) Examine the fuel tank for microbial growth:
   (a) Microbial growth usually occurs at the fuel/water interface in the fuel tanks.
   (b) Microbial growth can also occur in other areas such as vertical surfaces and convex shapes such as fuel tubing.
   (c) Microbial growth can appear in a variety of colors.
   (d) If a tank is wet with fuel, the microbial growth can appear as a smooth slimy transparent gel material.
   (e) If a tank is dry, the microbial growth can appear as a dark solid material on the tank surfaces.
   (f) Microbial growth can cause the tank protective primer coating to appear stained.

S 212-024

(4) Microbial growth is usually found in these areas:
   (a) The bottom of the tank where water collects.
   (b) The lower surfaces of the wing structure (stringers, spars, ribs etc).
   (c) The top surfaces of the tubing.
   (d) The flow holes and the drain tubes.
   (e) Areas where water is possibly trapped.
   (f) Inside or around fuel system components.

S 622-025

(5) Do these steps if you find microbial growth:
   (a) Do the applicable task to remove the microbial growth:
      1) Microbial Growth Removal - Manual Removal Method
      2) Microbial Growth Removal - Pressure Washer Removal Method
   (b) Examine the fuel tank structure for corrosion (SRM Chapter 57).

S 622-026

(6) Do these steps after you clean the fuel tank:
   (a) Do the inspection for the remaining tanks that have tested positive for microbial growth.
   (b) Do this task: Fuel Tank Closure (AMM 28-11-00/201).
   (c) Do a biocide treatment of the fuel tanks.
   (d) Return the airplane to service.
   (e) Within 10 days, get a new fuel/water sample and do the microbial detection test again.

      NOTE: This test is necessary to make sure the microbial growth removal and biocide treatment processes have reduced the level of microbial contamination to an acceptable level.

BOEING PROPRIETARY - Copyright (C) - Unpublished Work - See title page for details.

(f) Make sure all of the biocide treated fuel has been burned through the engines (a minimum of five flights).
(g) After 10 to 75 hours replace these filters:
1) Engine fuel filters (AMM 73-11-02/401)
2) APU fuel filter (AMM 49-31-04/401).

S 622-027
(7) After the biocide treatment, do these steps:
(a) Wait for 10 days after the biocide treatment.
(b) Get a new fuel sample for each tank.
(c) Do the microbial growth detection test again.
(d) If the tests show that the biocide treatment was not successful, do these steps:
1) Completely fill the fuel tanks with biocide treated fuel.
2) Use the maximum soak time:
a) Biobor JF - 72 Hours
b) Kathon FP 1.5 - 24 Hours
(e) If the tests show that the biocide treatment was successful, then continue to test the aircraft at the usual intervals.

TASK 28-10-00-622-028
4. Biocide Treatment of Fuel Tanks - Metered Injection Cart
A. General
(1) There are two methods to add biocide treatment to the fuel tanks:
(a) Metered injection cart
(b) Overwing fuel port
(2) Do this task if a metered injection cart is available.
(3) If you need to add biocide without a metered injection cart, then do the overwing fill port task.
(4) There are two types of metered-injection carts:
(a) Adjustable metered injection cart
(b) Non-adjustable metered injection cart
(5) ADJUSTABLE METERED INJECTION CART;
This type of metered injection cart is equipped with an adjustable concentration setting. You can adjust the concentration setting from tank to tank.
(6) NON-ADJUSTABLE METERED INJECTION CART;
This type of metered injection cart is not field adjustable. You cannot adjust the concentration setting from tank to tank. You can recalibrate the cart (in a maintenance shop) to achieve the desired 270 ppm concentration for Biobor JF or 100 ppm concentration for Kathon FP 1.5. To account for the typical fuel remaining on-board after a flight, a procedure is given to recalibrate the cart to 1.5 times the usual setting. This method will allow the correct concentration of treated fuel to be added to the fuel tanks.

BOEING PROPRIETARY - Copyright (C) - Unpublished Work - See title page for details.

(7) Biocide treatment is used to kill microbial growth within the fuel tank. The process requires that the biocide be mixed at a specified concentration with fuel and allowed to soak for a period of time. After soaking, the biocide treated fuel may be burned through the engines.

(8) Two biocidal fuel additives are certified by the airframe and engine manufactures. These are:

(a) Biobor JF - manufactured by Hammonds

(b) Kathon FP 1.5 - manufactured by Rohm & Haas Company

NOTE: Biobor JF and Kathon FP 1.5 have not been approved in some geographic areas. Local regulatory agencies should be consulted with respect to approval status.

(9) Obey all Health and Safety precautions specified by the manufacturer related to the use of biocide.

(10) It is recommended to do this task with no fuel or a minimum fuel load (after a flight, before fuel servicing). It is not necessary to defuel the aircraft before you begin the biocide treatment.

B. References

(1) AMM 12-11-01/301, Fuel Servicing

(2) AMM 12-11-01/301, Manual Pressure Refueling

(3) AMM 12-11-03/301, Fuel Tank Sumping

(4) AMM 28-26-00/201, Defuel

(5) AMM 49-31-00/201, APU Engine Fuel System

(6) AMM 49-31-04/401, APU Fuel Filter

(7) AMM 73-11-02/401, Engine Fuel Filter

(8) CPM 20-62-00

C. Equipment

(1) Cart - Hydrant, Portable, Biocide Injection (or equivalent)
Model 800 (Manufactured by Hammonds)
Mil-International Inc
Vendor Code 3Z256

(2) Cart, Hydrant, portable, metered injection of jet fuel additives
Model #69-10-04-999, (or equivalent) manufactured by Lubrizol

Lubrizol Performance Systems Inc
2000 Northfield Court
Roswell, GA 30076
(770) 475-1900
(770) 475-1717 (Fax number)

D. Consumable Materials

(1) Biocide - Use one of these fuel additives:

(a) G00452 - Biobor JF, Biocide

BOEING PROPRIETARY - Copyright (C) - Unpublished Work - See title page for details.

(b) G02347 - Kathon FP 1.5 biocide, Rohm and Haas Company, Pennsylvania, USA (215) 592-3000

Distributor for Kathon FP 1.5,
Fuel Quality Services, Inc.
Georgia, USA
(770) 967-9790
(770) 967-9982 (Fax number)

E. Access

(1) Location Zone
521 Leading Edge to Front Spar (Left)

(2) Access Panel
521QB Fueling Station Door (Left)

F. Biocide Precautions

S 622-029

(1) Obey these personnel precautions:

WARNING: DO NOT BREATHE BIOCIDE VAPOR OR TOUCH THE BIOCIDE FUEL ADDITIVE. IF YOU BREATHE THE VAPORS OR TOUCH THE BIOCIDE FUEL ADDITIVE, IT CAN CAUSE HEALTH PROBLEMS. CONSULT THE MANUFACTURES MSDS.

(a) Do not breathe or touch the biocide fuel additive.
(b) During maintenance with biocide fuel additives, wear these protective equipment items:
1) Eye protection
2) Fuel resistant gloves
3) Protective outerwear
(c) Do not sump the fuel tanks when biocide has been added to the fuel tank(s). A high concentration of biocide will be present at the sump drain.

S 622-030

(2) Obey these biocide additive precautions:
(a) Obey all requirements specified by the manufacturer related to the use of the biocide.

CAUTION: DO NOT EXCEED THE MAXIMUM CONCENTRATION OF BIOCIDE. DAMAGE TO THE ENGINES CAN OCCUR IF THE BIOCIDE CONCENTRATION IS ABOVE THE MAXIMUM LIMIT.

(b) Do not exceed the maximum allowable concentration of biocide (parts per million) in a fuel tank.

BOEING PROPRIETARY - Copyright (C) - Unpublished Work - See title page for details.

(c) If the concentration exceeds the limit, then add more untreated fuel to dilute the biocide concentration.
(d) If you exceed the maximum allowable concentration of biocide in a fuel tank and you cannot dilute the concentration with untreated fuel, then contact the engine manufacturer for corrective action.
(e) If you spill biocide, then do these steps:
1) Immediately contain the spill area.
2) Use a cotton wiper (BMS15-5) and water to clean the area.
3) Use the correct procedures to dispose of the material.

G. Prepare for the Biocide Treatment

S 682-031
(1) Sump the fuel tanks (AMM 12-11-03/301).

S 622-033
(2) Do one of these procedures:
(a) Apply the Biocide to the Fuel Tanks - Adjustable Metered
(b) Apply the Biocide to the Fuel Tanks - Non-adjustable Metered Injection

H. Apply the Biocide to the Fuel Tanks - Adjustable Metered Injection

S 622-034
(1) Obey the biocide precautions.

S 622-035
(2) Use the instructions provided with the metered injection cart to connect the cart to the refueling equipment.

S 622-036
(3) Do these steps to calculate the metered injection setting:
(a) Use Table 201 to determine the final biocide concentration.

NOTE: Table 201 gives the final concentration of biocide allowed in the fuel tank. This is the maximum concentration of biocide that can be run through the engines. You must adjust the metered injection setting to achieve the correct concentration of biocide.

NOTE: If you add a biocide concentration that is much lower than the maximum concentration, the biocide treatment must soak longer and is not as effective in killing the microbial growth.

(b) Use Table 202 to calculate the biocide concentration setting for each fuel tank.

BOEING PROPRIETARY - Copyright (C) - Unpublished Work - See title page for details.

(c) The metered injection cart setting depends on these variables:
1) Type of biocide used.
2) Amount of untreated fuel in the fuel tank.
3) Amount of treated fuel to be uplifted into the fuel tank.

Table 201	
BIOCIDE	CONCENTRATION
BIOBOR JF	270 ppm by weight
KATHON FP1.5	100 ppm by volume

Table 202	
METERED INJECTION CART SETTING	
BIOBOR JF	KATHON FP 15
$C(uf) = \frac{270\ (FOB + UPLIFT)}{UPLIFT}$	$C(uf) = \frac{100\ (FOB + UPLIFT)}{UPLIFT}$
C(uf) = Concentration of fuel to be uplifted FOB = Untreated fuel quantity on-board UPLIFT = Fuel quantity with metered biocide to be added NOTE: Fill each tank to a minimum of 1/3 full.	

S 622-037

(4) Adjust the metered injection cart:
(a) Use the instructions provided with the metered injection cart to adjust the cart.
(b) Set the injection setting to achieve the desired biocide concentration.

BOEING PROPRIETARY - Copyright (C) - Unpublished Work - See title page for details.

S 622-038
(5) Plan the refueling operation:
(a) Each tank must be filled to a minimum of 1/3 full.

S 622-039
(6) Do these steps to add the biocide:
(a) Open the refuel valve(s) for one tank only (AMM 12-11-01/301).
(b) Begin the refuel operation (manual pressure refueling) (AMM 12-11-01/301).
(c) The correct biocide concentration is mixed with the fuel and added to the fuel tank.
(d) Refuel the tank to the desired fuel load.
(e) Make sure the tank is filled a minimum of 1/3 full.
(f) Stop the refuel operation (AMM 12-11-01/301).
(g) Do the biocide calculation again and adjust the injection cart setting for the next tank (Table 202).
(h) Continue to apply the treated fuel to all fuel tanks.

S 622-040
(7) Do this procedure: Biocide Treatment Soak Time

I. NO FUEL ON-BOARD;
Apply the Biocide to the Fuel Tanks - Non-Adjustable Metered Injection

S 622-041
(1) Do this procedure if all of the fuel tanks are empty before you begin to add the biocide treated fuel.

S 622-042
(2) Obey the biocide precautions.

S 622-043
(3) Do these steps to calibrate the metered injection cart:
(a) Use the instructions provided with the metered injection cart to calibrate the equipment.

NOTE: The equipment is not field adjustable. The calibration must be done in a maintenance shop.

(b) Calibrate the concentration setting to the applicable value:
1) Biobor JF - 270 ppm by weight
2) Kathon FP 1.5 - 100 ppm by volume
(c) Use the instructions provided with the metered injection cart to connect the cart to the refueling equipment.

BOEING PROPRIETARY - Copyright (C) - Unpublished Work - See title page for details.

S 622-044
(4) Plan the refueling operation:
(a) Each tank must be filled to a minimum of 1/3 full.

S 622-045
(5) Do these steps to add the biocide:
(a) Begin the refuel operation (AMM 12-11-01/301).
(b) The correct biocide concentration is mixed with the fuel and added to the fuel tank.
(c) Fill each fuel tank to a minimum of 1/3 full.
(d) Stop the refueling operation (AMM 12-11-01/301).

S 622-046
(6) Do this procedure: Biocide Treatment Soak Time

J. UNTREATED FUEL ON-BOARD;
Apply the Biocide to the Fuel Tanks - Non-Adjustable Metered Injection

S 622-047
(1) Do this procedure if there is less than 27,000 lbs (12,200 kgs) of untreated fuel on-board before you begin to add the biocide treated fuel.

S 622-048
(2) Obey the biocide precautions.

S 622-049
(3) Do these steps to distribute the untreated on-board fuel:
(a) Transfer all of the fuel to the left and right main tanks (AMM 28-26-00/201).
(b) Make sure the fuel quantity is equally distributed between the two main tanks.
(c) If necessary, refuel the left and right main tanks with untreated fuel until each tank is 1/3 full, 13,500 lbs (6,100 kgs) (AMM 12-11-01/301).

S 622-050
(4) Do these steps to calibrate the metered injection cart:
(a) Use the instructions provided with the metered injection cart to calibrate the equipment.

NOTE: The equipment is not field adjustable. The calibration must be accomplished in a maintenance shop.

BOEING PROPRIETARY - Copyright (C) - Unpublished Work - See title page for details.

(b) With 27,000 lbs (12,200 kgs) of untreated fuel on-board, calibrate the concentration setting to 1.5 times the maximum concentration:
1) Biobor JF - 405 ppm by weight
2) Kathon FP 1.5 - 150 ppm by volume
(c) Use the instructions provided with the metered injection cart to connect the cart to the refueling equipment.

S 622-051
(5) Do these steps to add the biocide:
(a) Open the refuel valves for the left and right main tanks only (AMM 12-11-01/301).
(b) Begin the refuel operation (manual pressure refueling) (AMM 12-11-01/301).
(c) Completely fill the left and right main tanks with treated fuel.
(d) After the treated and untreated fuel is mixed in the tanks, the concentration of biocide will be correct.

S 622-052
(6) Do these steps to distribute the treated fuel:
(a) Distribute the biocide treated fuel in the left and right main tanks to all other tanks (AMM 28-26-00/201).
(b) Make sure each fuel tank is a minimum of 1/3 full.

S 622-053
(7) Do this procedure: Biocide Treatment Soak Time

K. Biocide Treatment Soak Time

S 622-054
(1) Obey the biocide precautions.

S 622-055
(2) Allow the biocide treatment to soak per the applicable minimum time given in Table 203.

Table 203

BIOCIDE	SOAK TIME
BIOBOR JF	36 - 72 HOURS
KATHON FP1.5	12 - 24 HOURS

BOEING PROPRIETARY - Copyright (C) - Unpublished Work - See title page for details.

S 622-056

(3) These factors affect how quickly the biocide kills the microbial growth:
   (a) The longer the soak time, the better the biocide will work.
   (b) Additional soak time may be required for low temperatures.
   (c) A low concentration of biocide is not as effective in killing microbial growth.

   NOTE: If the concentration of biocide is too low, the microbes can become resistant to the biocide.

S 622-057

(4) During the soak time, do not move the airplane or operate the fuel pumps or APU pumps.

L. Post-Biocide Treatment Maintenance Actions

S 622-058

(1) After the biocide soak time, return the airplane to service.

   NOTE: The biocide treated fuel is burned through the engines.

S 622-059

(2) After 10 to 75 hours replace these filters:

   NOTE: If one engine filter shows high levels of particulates, replace the other filters before the next flight.

   (a) Engine fuel filters (AMM 73-11-02/401)
   (b) APU Engine Fuel System (AMM 49-31-00/201).
   (c) APU Fuel Filter (AMM 49-31-04/401).

S 622-060

(3) Within 10 days, but after at least five flights, do the microbial growth detection test again.

S 622-061

(4) If the tests show that the biocide treatment was not successful, then do these steps:
   (a) Completely fill the fuel tanks with biocide treated fuel.
   (b) Use the maximum soak time:
      1) Biobor JF - 72 Hours
      2) Kathon FP 1.5 - 24 Hours

BOEING PROPRIETARY - Copyright (C) - Unpublished Work - See title page for details.

TASK 28-10-00-602-062

5. Biocide Treatment of Fuel Tanks - Overwing Fill Ports (Alternate Method)

A. General

(1) If metered fuel injection equipment is not available, you can add the biocide treatment into the fuel tanks through the overwing ports.

(2) You must calculate and add the correct amount of biocide treatment to the fuel tanks.

(3) After you add the biocide treatment to the main tanks, you must transfer the treated fuel to the other tanks.

B. References

(1) AMM 12-11-01/301, Manual Pressure Refueling
(2) AMM 20-10-27/201, Safety Harness
(3) AMM 20-41-00/201, Electrical Ground and Bond
(4) AMM 27-81-00/201, Leading Edge Flaps
(5) AMM 28-26-00/201, Defuel
(6) AMM 49-31-00/201, APU Engine Fuel System
(7) AMM 49-31-04/401, APU Fuel Filter
(8) AMM 73-11-02/401, Fuel Filter

C. Equipment

(1) Container - Metal, suitable for adding Biocide
(2) Funnel - Metal, suitable for adding Biocide at the overwing fuel port

D. Consumable Materials

(1) Biocide - Use one of these fuel additives:
(a) G00452 - Biobor JF, Biocide
(b) G02347 - Kathon FP 1.5 Biocide, Rohm and Haas Company, Philadelphia, PA, (215) 592-3000

E. Access

(1) Location Zones:
500 Left Wing
600 Right Wing

F. Biocide Precautions

S 622-063

(1) Obey these personnel precautions:

WARNING: DO NOT BREATHE BIOCIDE VAPOR OR TOUCH THE BIOCIDE FUEL ADDITIVE. IF YOU BREATHE THE VAPORS OR TOUCH THE BIOCIDE FUEL ADDITIVE, IT CAN CAUSE HEALTH PROBLEMS. CONSULT THE MANUFACTURES MSDS.

(a) Do not breathe or touch the biocide fuel additive.

BOEING PROPRIETARY - Copyright (C) - Unpublished Work - See title page for details.

(b) During maintenance with biocide fuel additives, wear these protective equipment items:
1) Eye protection
2) Fuel resistant gloves
3) Protective outerwear

(c) Do not sump the fuel tanks when biocide has been added to the fuel tank(s). A high concentration of biocide will be present at the sump drain.

S 622-064

(2) Obey these biocide additive precautions:

(a) Obey all requirements specified by the manufacturer related to the use of the biocide.

CAUTION: DO NOT EXCEED THE MAXIMUM CONCENTRATION OF BIOCIDE. DAMAGE TO THE ENGINES CAN OCCUR IF THE BIOCIDE CONCENTRATION IS ABOVE THE MAXIMUM LIMIT.

(b) Do not exceed the maximum allowable concentration of biocide (parts per million) in a fuel tank.

(c) If the concentration exceeds the limit, then add more untreated fuel to dilute the biocide concentration.

(d) If you exceed the maximum allowable concentration of biocide in a fuel tank and you cannot dilute the concentration with untreated fuel, then contact the engine manufacturer for corrective action.

(e) For Biobor JF; Do not exceed the maximum concentration of the biocide fuel additive to the fuel tanks. A large concentration of the biocide fuel additive can make salt deposits in the fuel tanks.

(f) If you spill biocide, then do these steps:
1) Immediately contain the spill area.
2) Use a cotton wiper (BMS15-5) and water to clean the area.
3) Use the correct procedures to dispose of the material.

G. Prepare the Fuel System for the Biocide Treatment

S 622-066

(1) Make sure the total fuel load is within these limits:

(a) Minimum - approximately 1/3 the total fuel capacity (all tanks)

(b) Maximum - total fuel capacity for the main tanks.

(c) Obey the maximum allowable fuel quantity when you use the main tank overwing fill ports.

(d) If it is necessary, add fuel to the main tanks to make sure the minimum fuel quantity is available (AMM 12-11-01/301).

BOEING PROPRIETARY - Copyright (C) - Unpublished Work - See title page for details.

S 652-067

(2) Transfer all of the on-board fuel evenly between the left and right main tanks (AMM 28-26-00/201).

H. Prepare the Overwing Fill Ports for the Biocide Treatment

S 482-069

WARNING: INSTALL THE LOCKS ON ALL EXTENDED LEADING EDGE FLAPS. THIS WILL PREVENT INJURY FROM AN ACCIDENTAL OPERATION OF THE FLAPS.

(1) Do this task for extended leading edge flaps: Extended Leading Edge Flaps Deactivation and Safety Locks Installation (AMM 27-81-00/201).

S 482-070

WARNING: YOU MUST GROUND THE AIRPLANE TO AN APPROVED EARTH GROUND BEFORE YOU REMOVE THE OVERWING FILL CAP. IF YOU DO NOT OBSERVE THIS PROCEDURE, A STATIC SPARK CAN CAUSE A FIRE OR EXPLOSION TO OCCUR.

(2) Connect a grounding cable from an approved earth ground to an approved electrical ground point on the airplane (static ground) (AMM 20-41-00/201).

S 912-071

WARNING: YOU MUST WEAR A SAFETY HARNESS WHEN YOU ADD BIOCIDE TO THE OVERWING FILL PORT. A SERIOUS INJURY CAN OCCUR IF YOU FALL FROM THE WING SURFACE.

(3) Put on a safety harness and connect the harness to the supplied harness receptacle (AMM 20-10-27/201).

S 482-072

(4) Position pads on the wing surface to prevent damage.

S 482-073

(5) Do these steps to make a spill containment barrier around the overwing fill port:
   (a) Position a sheet of plastic around the overwing fill port.
   (b) Use sandbags to hold down the plastic.
   (c) Adjust the sheet to make a spill containment barrier.

BOEING PROPRIETARY - Copyright (C) - Unpublished Work - See title page for details.

I. Calculate the Amount of Biocide to Add to the Fuel

S 622-074
(1) For Biobor JF:
(a) Multiply the quantity of fuel in pounds by 0.004 to get the fluid ounces of Biobor JF.
(b) Multiply the quantity of fuel in kilograms by 0.26 to get the milliliters of Biobor JF.

S 622-075
(2) For Kathon FP 1.5:
(a) Multiply the quantity of fuel in pounds by 0.0000149 to get the gallons of Kathon FP 1.5
(b) Multiply the quantity of fuel in kilograms by 0.1245 to get the milliliters of Kathon FP 1.5

J. Add the Biocide to the Fuel Tanks

S 622-076
(1) Obey the biocide precautions.

S 622-077
(2) Do not exceed the maximum allowable concentration of biocide (parts per million) in a fuel tank (Table 204).

Table 204

BIOCIDE	CONCENTRATION
BIOBOR JF	270 ppm by weight
KATHON FP1.5	100 ppm by volume

S 622-078
(3) Pour the correct amount of biocide for a single tank into an approved 5 gallon metal container.

S 622-079
(4) Fill the metal container with fuel.

BOEING PROPRIETARY - Copyright (C) - Unpublished Work - See title page for details.

S 482-080

WARNING: BOND THE OVERWING FILL PORT FUNNEL AND BIOCIDE CONTAINER TO THE AIRCRAFT BEFORE THE OVERWING FILL CAP IS REMOVED. THIS CONNECTION MUST REMAIN IN PLACE UNTIL AFTER THE TANK FILL CAP IS REPLACED. IF YOU DO NOT OBSERVE THIS PROCEDURE, A STATIC SPARK CAUSING A FIRE OR EXPLOSION CAN OCCUR.

(5) Connect the biocide container and funnel to an approved airplane bonding point (AMM 20-41-00/201).

S 912-081

CAUTION: KEEP ALL LOOSE OBJECTS AWAY FROM THE FILL PORT. REMOVE ANY OBJECTS FROM YOUR SHIRT POCKET (PENS, CIGARETTES, LIGHTERS ETC.) BEFORE YOU OPEN THE FILL CAP. IF AN OBJECT DOES FALL INTO THE FUEL TANK, FIND AND REMOVE THE OBJECT IMMEDIATELY. UNWANTED OBJECTS IN THE FUEL TANK CAN CAUSE DAMAGE TO IN-TANK EQUIPMENT AND ELECTRICAL WIRING.

(6) Do these steps to add the biocide to the fuel tank:
- (a) Open the overwing fill port for left main tank.
- (b) Install the funnel in the overwing fill port.
- (c) Pour the biocide into the fuel tank.
- (d) Install the overwing fill cap.
- (e) Remove the equipment used to add biocide to the overwing port.
- (f) Repeat these steps for the right main tank.

S 082-082

(7) Remove all of the equipment used to add the biocide additive.

K. Distribute the Biocide Treated Fuel to the Other Fuel Tanks

S 622-083

(1) Plan the distribution of the fuel:
- (a) Make sure each tank contains a minimum of 1/3 of the total capacity of the tank.
- (b) Maintain an even distribution between opposite tanks.

S 622-084

(2) Transfer fuel to all of the fuel tanks (AMM 28-26-00/201).

L. Put the Airplane Back to the Usual Condition

S 082-085

(1) Disconnect the grounding cable from the airplane to the earth ground (AMM 20-41-00/201).

BOEING PROPRIETARY - Copyright (C) - Unpublished Work - See title page for details.

S 082-086

WARNING: DO THE PROCEDURE IN AMM 27-81-00/201 TO REACTIVATE THE EXTENDED LEADING EDGE FLAPS. THE FLAPS MOVE QUICKLY AND CAN CAUSE INJURY TO PERSONS OR DAMAGE TO EQUIPMENT.

(2) Do this task for extended leading edge flaps: Safety Locks Removal and Extended Leading Edge Activation (AMM 27-81-00/201).

M. Biocide Treatment Soak Time

S 622-088

(1) Obey the biocide precautions.

S 622-089

(2) Allow the biocide treatment to soak per the applicable minimum time given in Table 205.

Table 205

BIOCIDE	SOAK TIME
BIOBOR JF	36 - 72 HOURS
KATHON FP1.5	12 - 24 HOURS

S 622-090

(3) These factors affect how quickly the biocide kills the microbial growth:
(a) The longer the soak time, the better the biocide will work.
(b) Additional soak time may be required for low temperatures.
(c) A low concentration of biocide is not as effective in killing microbial growth.

NOTE: If the concentration of biocide is too low, the microbes can become resistant to the biocide.

S 622-091

(4) During the soak time, do not move the airplane or operate the fuel pumps or APU pumps.

BOEING PROPRIETARY - Copyright (C) - Unpublished Work - See title page for details.

N. Post-Biocide Treatment Maintenance Actions

S 622-092
(1) After the biocide soak time, return the airplane to service.

NOTE: The biocide treated fuel is burned through the engines.

S 622-093
(2) After 10 to 75 hours replace these filters:

NOTE: If one engine filter shows high levels of particulates, replace the other filters before the next flight.

(a) Engine fuel filters (AMM 73-11-02/401)
(b) APU Fuel Filter (AMM 49-31-04/401).

S 622-094
(3) Within 10 days, but after at least five flights, do the microbial growth detection test again.

S 622-095
(4) If the tests show that the biocide treatment was not successful, then do these steps:
(a) Completely fill the fuel tanks with biocide treated fuel.
(b) Use the maximum soak time:
1) Biobor JF - 72 Hours
2) Kathon FP 1.5 - 24 Hours

TASK 28-10-00-102-096
6. Microbial Growth Removal - Manual Removal Method
A. General
(1) There are two methods to remove the microbial growth. If the fuel tank inspection shows that the area that is contaminated is small, then do this task to manually remove the contamination.
(2) If the fuel tank inspection shows that the contamination area is large or the area is inaccessible (manual removal is not practical), then do this task: Microbial Growth Removal - Pressure Washer Method.
B. Reference
(1) AMM 28-11-00/201, Fuel Tanks
(2) SRM 57-00-00, Wings
C. Equipment
(1) Brush - fiber

BOEING PROPRIETARY - Copyright (C) - Unpublished Work - See title page for details.

(2) Protective outer clothing to prevent skin contact with microbial contamination:
(a) Fuel and solvent resistant gloves
(b) Saranex suit
(c) Neoprene boots
(3) Respirator - Half face canister style respirators (minimum), U.S. Bureau of Mines Approved or equivalent

D. Consumables
(1) B00130 Alcohol - Isopropyl
(2) G00034 Cotton Wiper, Process Cleaning Absorbent Wiper (cheesecloth, gauze) BMS15-5

E. Access
(1) Location Zones

136	Enviromental Control System Bay (Right)
194	Wing to Body - Forward Lower Half (Right)
500	Main Tank (Left)
600	Main Tank (Right)
531	Center Auxiliary Tank (Left)
631	Center Auxiliary Tank (Right)

(2) Access Panels

136KZ	Auxiliary Tank Access Door (Center)
194HR	Pressure Relief Door (Right)
531BB	Auxiliary Tank Access Door (Left)
631BB	Auxiliary Tank Access Door (Right)
532BB thru 541XB	Fuel Tank Access Doors, Left
632BB thru 641XB	Fuel Tank Access Doors, Right

F. Prepare to Remove the Microbial Growth

S 862-097
(1) Do this procedure after you have completed this task: Microbial Growth Fuel Tank Inspection.

S 912-098

WARNING: CAREFULLY DO ALL THE SAFETY PROCEDURES TO GO INTO THE FUEL TANKS. INJURY TO PERSONS AND DAMAGE TO EQUIPMENT CAN OCCUR IF YOU DO NOT OBEY THE SAFETY PROCEDURES.

(2) Prepare the fuel tank for a tank entry (AMM 28-11-00/201).

BOEING PROPRIETARY - Copyright (C) - Unpublished Work - See title page for details.

S 862-099

WARNING: MAKE SURE THERE IS A GOOD FLOW OF AIR IN THE FUEL TANK WHERE YOU WILL REMOVE THE MICROBIAL GROWTH. A GOOD FLOW OF AIR WILL PREVENT THE BUILD-UP OF ISOPROPYL ALCOHOL VAPOR THAT IS USED TO REMOVE THE MICROBIAL GROWTH. ISOPROPYL ALCOHOL IS FLAMMABLE AND TOXIC.

(3) Make sure the fuel tank has a sufficient flow of air.

S 912-100

WARNING: WEAR AN APPROVED RESPIRATOR AND PROTECTIVE CLOTHING BEFORE YOU ENTER A FUEL TANK CONTAMINATED WITH MICROBIAL GROWTH. IF YOU BREATHE AIR CONTAMINATED WITH MICROBIAL GROWTH RESIDUE, OR ALLOW THE MICROBIAL GROWTH TO TOUCH YOUR SKIN, IT IS POSSIBLE THAT HEALTH PROBLEMS CAN OCCUR.

(4) Put on this protective gear to prevent contact with microbial growth:
- (a) Respirator - Half face canister style respirators (minimum)
- (b) Fuel and alcohol resistant gloves
- (c) Eye protection
- (d) Saranex suit
- (e) Neoprene boots

G. Remove the Microbial Growth - Manual Method

S 012-101

(1) Go into the fuel tank (AMM 28-11-00/201).

S 162-102

(2) Do these steps to remove the microbial growth:
- (a) Use a fiber brush to loosen the contamination.
- (b) Apply isopropyl alcohol to a clean cotton wiper (BMS15-5).
- (c) Use the minimum amount of isopropyl alcohol that is necessary.
- (d) Use the cotton wiper (BMS15-5) to remove the microbial growth.
- (e) Put any used cotton wipers (BMS15-5) in a plastic bag to reduce the isopropyl alcohol vapor in the tank.
- (f) Use an air hose or a wire to make sure the flow hole areas are free of unwanted material.
- (g) Use an air hose with a nozzle (90 psi maximum) to blow any material from the inlet screen on the water and fuel scavenge pumps.

BOEING PROPRIETARY - Copyright (C) - Unpublished Work - See title page for details.

S 212-103
(3) Do a visual check of the fuel tank structure for corrosion.
(a) If you find corrosion, then repair the damage (SRM 57-00-00).

H. Put the Airplane Back to the Usual Condition

S 012-104
(1) Install any panels or structure that you removed.

S 912-105
(2) Do this task: Fuel Tank Closure (AMM 28-11-00/201).

S 622-106
(3) Do this task: Biocide Treatment of the Fuel Tanks.

TASK 28-10-00-102-107

7. Microbial Growth Removal - Pressure Washer Method

A. General
(1) There are two methods to remove the microbial growth. If the fuel tank inspection shows that the area that is contaminated is small, then do this task: Microbial Growth Removal - Manual Removal Method.
(2) If the fuel tank inspection shows that the contamination area is large or the area is inaccessible (manual removal is not practical), then use the pressure washer method to remove the contamination.
(3) If you use a pressure washer you must remove all of the in-tank FQIS components and use care not to damage the fuel tank sealant. After you finish the procedure make sure all the water is removed and the tank is completely dried.

B. References
(1) AMM 28-11-00/201, Fuel Tanks
(2) AMM 28-11-00/801, Fuel Tanks
(3) AMM 28-11-05/401, Fuel Sump Drain Valve
(4) AMM 28-22-06/401, Automatic Sumping Jet Pumps
(5) AMM 28-22-13/401, Scavenge Jet Pumps
(6) AMM 28-41-01/401, FQIS Tank Units
(7) AMM 28-41-02/401, FQIS Compensators
(8) AMM 28-41-03/401 FQIS Densitometers
(9) SRM 57-00-00, Wings

C. Consumables
(1) B00130 Alcohol - Isopropyl
(2) G00034 Cotton Wiper, Process Cleaning Absorbent Wiper (cheesecloth, gauze) BMS15-5

D. Equipment
(1) Gloves - applicable for hot water cleaning
(2) Protective Clothing - Waterproof pants, boots, jacket with hood

BOEING PROPRIETARY - Copyright (C) - Unpublished Work - See title page for details.

(3) Pressure Washer - Hot Water - Surface impact requirement (Maximum):
Temperature: 160 Degree F (70 degrees C)
Pressure: 100 psi (690 kpa)
Flow: 3 to 5 gallons (11 to 20 liters) per minute

(4) Respirator - Full face canister style respirators (minimum), U.S. Bureau of Mines Approved or equivalent
(5) Source of hot water
(6) Vacuum cleaner - air powered, wet/dry

E. Access
(1) Location Zones

136	Enviromental Control System Bay (Right)
193	Wing to Body - Forward Lower Half (Left)
194	Wing to Body - Forward Lower Half (Right)
500	Main Tank (Left)
600	Main Tank (Right)
531	Center Auxiliary Tank (Left)
631	Center Auxiliary Tank (Right)

(2) Access Panels

136KZ	Auxiliary Tank Access Door (Center)
193SLX	Fuel Sump Drain Door (Left)
194HR	Pressure Relief Door (Right)
194QRX	Fuel Sump Drain Door (Right)
531BB	Auxiliary Tank Access Door (Left)
631BB	Auxiliary Tank Access Door (Right)
532BB thru 541XB	Fuel Tank Access Doors, Left
632BB thru 641XB	Fuel Tank Access Doors, Right

F. Hot Water Pressure Washer - Precautions

S 162-108

WARNING: OBEY THESE PRECAUTIONS WHEN YOU CLEAN THE FUEL TANK WITH A HOT WATER PRESSURE WASHER. HOT WATER CAN BURN YOU AND HIGH TEMPERATURES IN THE TANK CAN CAUSE HEAT-RELATED HEALTH PROBLEMS. USE THE CORRECT PRESSURE WASHER TECHNIQUE TO PREVENT DAMAGE TO THE FUEL TANK SEALS.

(1) The person in the fuel tank must have these items for protection:
(a) Heat protective gloves
(b) Water-proof outer gloves
(c) Water-proof coat and pants
(d) Water-proof and heat protective hood
(e) A full face mask

BOEING PROPRIETARY - Copyright (C) - Unpublished Work - See title page for details.

(f) Protective gear to protect against breathing or touching microbial growth
(g) A hot water line that closes automatically when you release it ("deadman" control switch).

S 912-109
(2) The fuel tank observer must monitor the person in the tank for signs of health problems related to overheating.

S 912-110
(3) Use air movers to have a good flow of air in the tanks.

S 912-111
(4) While you clean, continue to move air through the tank.

S 022-112
(5) To prevent damage, remove the in-tank FQIS system components.

S 162-114
(6) Make sure to use the correct pressure washer technique:
(a) Use a spray of approximately 100 psi maximum at the tank surface.
(b) Keep the time you point the nozzle at one position to a minimum.
(c) Move the spray through an area at approximately 6 inches per second.
(d) Many fast passes are better than one slow pass.
(e) Do not point the spray at the feathered edge of the seal compound.

NOTE: This loosens the joint.

(f) If you put heat or water pressure on the sealant for a long time, you can damage the sealant.

G. Prepare the Tank for the Hot Water Pressure Washing

S 912-115

WARNING: CAREFULLY DO ALL THE SAFETY PROCEDURES TO GO INTO THE FUEL TANKS. INJURY TO PERSONS AND DAMAGE TO EQUIPMENT CAN OCCUR IF YOU DO NOT OBEY THE SAFETY PROCEDURES.

(1) Prepare to go into the fuel tank (AMM 28-11-00/201).

BOEING PROPRIETARY - Copyright (C) - Unpublished Work - See title page for details.

S 912-116

WARNING: WEAR AN APPROVED RESPIRATOR AND PROTECTIVE CLOTHING BEFORE YOU ENTER A FUEL TANK CONTAMINATED WITH MICROBIAL GROWTH. IF YOU BREATHE AIR CONTAMINATED WITH MICROBIAL GROWTH RESIDUE, OR ALLOW THE MICROBIAL GROWTH TO TOUCH YOUR SKIN, IT IS POSSIBLE THAT HEALTH PROBLEMS CAN OCCUR.

(2) Put on this protective gear to prevent contact with microbial growth:
   (a) Respirator - Half face canister style respirators (minimum)
   (b) Fuel resistant gloves
   (c) Saranex coveralls
   (d) Neoprene boots

S 022-117

(3) Remove these components for the tank(s) to be cleaned:

NOTE: Make a component removal record.

   (a) Fuel sump drain valve (AMM 28-11-05/401).
   (b) Automatic sumping jet pumps (AMM 28-22-06/401).
   (c) Scavenge jet pumps (AMM 28-22-13/401).
   (d) FQIS tank units (AMM 28-41-01/401)
   (e) FQIS compensators (AMM 28-41-02/401)
   (f) FQIS densitometers (AMM 28-41-03/401).

S 912-118

(4) Put a protective cover on these fuel system components and attach a REMOVE BEFORE FLIGHT TAG:
   (a) Fuel pump inlets
   (b) Automatic sumping jet pump inlets
   (c) Scavenge pump inlets
   (d) By-pass valve inlets

S 112-119

(5) Use the applicable supplier CMM to clean these components:
   (a) Fuel tank units
   (b) Compensators
   (c) Densitometer
   (d) Automatic sumping jet pumps
   (e) Scavenge jet pump

H. Pressure Wash the Fuel Tank

BOEING PROPRIETARY - Copyright (C) - Unpublished Work - See title page for details.

S 912-120

WARNING: OBEY ALL OF THE APPLICABLE PRECAUTIONS WHEN YOU CLEAN THE FUEL TANK WITH PRESSURIZED HOT WATER. INJURIES FROM THE PRESSURIZED HOT WATER OR DAMAGE TO THE FUEL TANK CAN EASILY OCCUR.

(1) Put on this protective gear to protect against the hot water pressure spray:
   (a) Respirator - Full face canister style respirators (minimum)
   (b) Heat protective gloves
   (c) Water-proof outer gloves
   (d) Water-proof pants, coat and boots
   (e) Water-proof and heat protective hood
   (f) A full face mask.

S 162-121

(2) Use the pressure washer to clean the fuel tank:
   (a) Start at the outboard end of the tank.
   (b) Hold the nozzle at a distance between 6 and 10 inches (150-250 mm) from the tank surface.
   (c) Position the nozzle at a 45 degree angle to the tank surface.
   (d) Point the nozzle in the direction of the access opening and the drain valve opening.
   (e) Continue to clean in the direction of the drain valve opening and the access opening.
   (f) Only use enough spray to remove the microbial growth.
   (g) Use short bursts, not a continuous flow.
   (h) Move the loose microbial growth and any unwanted material to the inboard end of the tank and out of the openings.
   (i) Complete the pressure washing of the fuel tank.

S 162-122

(3) After you pressure wash the fuel tank, do these steps:

CAUTION: MAKE SURE YOU REMOVE ALL OF THE WASTE PARTICLES CAUSED BY THE FUEL TANK CLEANING. THE UNWANTED MATERIAL CAN CAUSE A BLOCKAGE OF THE EJECTOR AND SCAVENGE PUMPS AND STOP THE OPERATION OF THESE SYSTEMS.

   (a) Use an air hose or a wire to make sure the flow hole areas are free of loosened microbial growth or unwanted material.

S 162-123

(4) Repeat these steps to pressure wash the remaining tanks as necessary.

BOEING PROPRIETARY - Copyright (C) - Unpublished Work - See title page for details.

I. Restore the Fuel Tank

S 162-124

(1) Remove the water from the fuel tank:
  (a) Continue to have a good flow of air until the tank is dry.
  (b) Use an air-powered vacuum cleaner to remove the water.
  (c) Mop-up any water that remains with a cotton wiper (BMS15-5).
  (d) Continue to move air through the fuel tanks until all moisture is removed.

S 212-125

(2) Do a check of the fuel tank for damage:
  (a) Do a visual check of the fuel tank structure for corrosion.
    1) If you find corrosion, then repair the damage (SRM 57-00-00).
  (b) Do a visual check for missing or damaged fuel tank sealant.
    1) If there is damage, repair the sealant (AMM 28-11-00/801).
  (c) Do a visual check for missing or loose fuel tank protective finish (topcoat).
    1) If there is loose finish, do this task: Apply the Corrosion Resistant Finish (Topcoat) (AMM 28-11-00/801).

J. Put the Airplane Back to Its Usual Condition

S 082-126

(1) Remove the fuel tank cleaning equipment and material.

S 412-127

(2) Install these components:
  (a) Fuel sump drain valve (AMM 28-11-05/401).
  (b) Automatic sumping jet pump (AMM 28-22-06/401).
  (c) Scavenge jet pump (AMM 28-22-13/401).
  (d) FQIS Tank Units (AMM 28-41-01/401)
  (e) FQIS Compensators (AMM 28-41-02/401)
  (f) FQIS Densitometers (AMM 28-41-03/401)

S 082-128

(3) Remove the protective covers from these fuel system components:
  (a) Fuel pump inlets
  (b) Automatic sumping jet pump
  (c) Scavenge pump inlets
  (d) Bypass valve inlets

K. Put the Airplane Back to the Usual Condition

S 012-129

(1) Install any panels or tank structure removed for access.

BOEING PROPRIETARY - Copyright (C) - Unpublished Work - See title page for details.

S 912-130
(2) Do this task: Fuel Tank Closure (AMM 28-11-00/201).

S 622-131
(3) Do this task: Biocide Treatment of the Fuel Tanks.

BOEING PROPRIETARY - Copyright (C) - Unpublished Work - See title page for details.

FUEL TANKS - DESCRIPTION AND OPERATION

1. General (Fig. 1)
   A. The airplane has three primary fuel tanks: left main, right main, and center auxiliary. The fuel tanks store fuel necessary to run the engines and auxiliary power unit. Two surge tanks supply collection of fuel overflow and fuel tank venting (AMM 28-13-00/001).
   B. The fuel tanks hold the necessary equipment for fueling (AMM 28-21-00/001), defueling (AMM 28-26-00/001) and engine fuel-feed (AMM 28-22-00/001). Related equipment which is necessary for APU fuel-feed (AMM 28-25-00/001) and fuel quantity indicating (AMM 28-41-00/001) is also contained within the fuel tank structure.
   C. Fuel Tank Construction (Fig. 1)
      (1) Primary wing structure is used for the fuel tanks. The fuel tanks are found between the front and rear wing spars and between the upper and lower skin. Solid "tank end" ribs close the ends of each fuel tank, while all other ribs act as fuel baffles to minimize fuel slosh.
      (2) The wing structure permits fuel flow to sump drain valves found in the lowest point of each fuel tank. Sump drain valves at these points permit contaminants to be drained from the fuel tank. These contaminants could cause damage to fuel system components or promote structural corrosion within the wings. The sump drain valves also permit removal of any residual fuel when a fuel tank is defueled.
      (3) All fuel tanks are fluid tight. Close metal to metal fit of all parts forms the basic seal. BMS 5-45 sealing compound and sealed fasteners are used on all joints to complete the fluid seal.
      (4) Entry into the fuel tanks is through 59 oval shaped access doors. The doors are found along the lower wing surface.
   D. Main Fuel Tanks
      (1) Each main fuel tank extends from wing rib 3 to rib 31. Rib 18, called the baffle rib, contains 13 fuel dams on the rib's lower edge. The fuel dams, with their integral check valves, permit fuel flow inboard to the fuel boost pumps while they limit outboard fuel flow. This prevents a rapid center of gravity shift whenever the airplane is in a roll attitude.

BOEING PROPRIETARY - Copyright (C) - Unpublished Work - See title page for details.

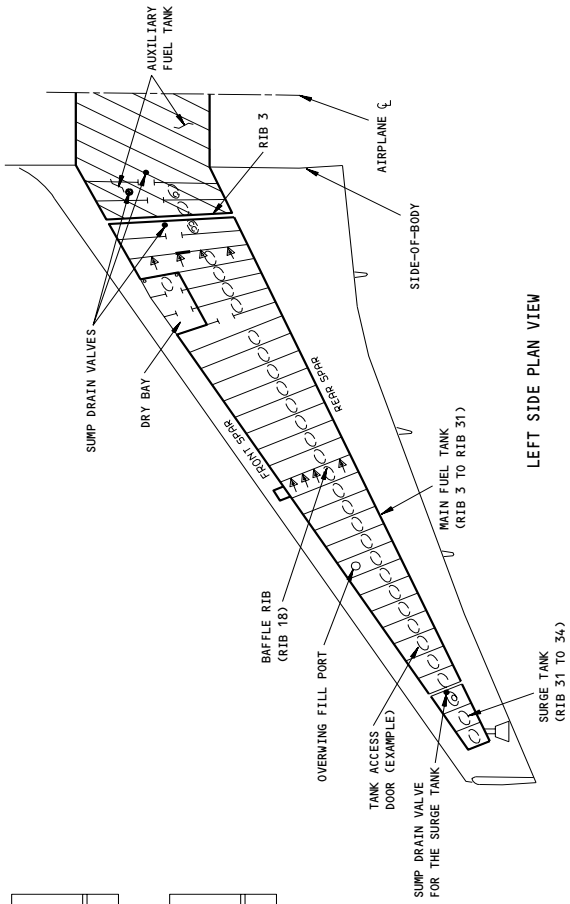

LEFT SIDE PLAN VIEW

APPROXIMATE FUEL TANK CAPACITIES (POUNDS, 1 GALLON = 6.70 POUNDS)

AUXILIARY FUEL TANK	EACH MAIN FUEL TANK	MAIN FUEL TANK (OVERWING FUELING PROCEDURE)	MAIN FUEL TANKS TOTAL	ALL FUEL TANKS TOTAL
79,700-80,400	40,300-40,700	39,700	80,500-81,300	160,200-161,700

APPROXIMATE FUEL TANK CAPACITIES (KILOGRAMS)

AUXILIARY FUEL TANK	EACH MAIN FUEL TANK	MAIN FUEL TANK (OVERWING FUELING PROCEDURE)	MAIN FUEL TANKS TOTAL	ALL FUEL TANKS TOTAL
36,200-36,500	18,300-18,500	18,000	36,600-37,000	72,800-73,500

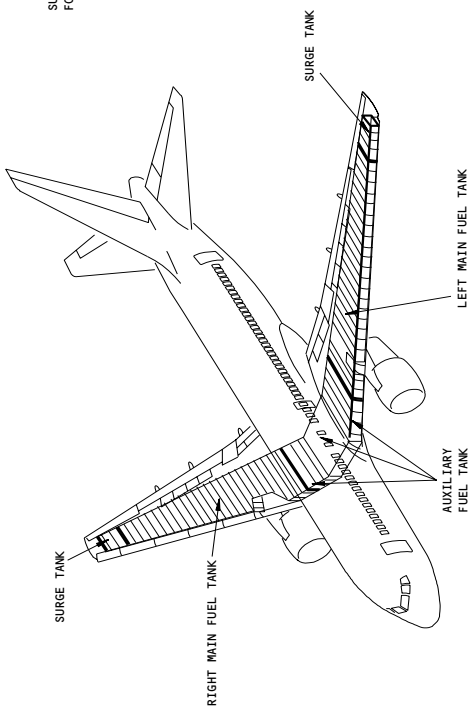

Fuel Tanks
Figure 1

BOEING PROPRIETARY - Copyright (C) - Unpublished Work - See title page for details.

(2) Twenty fuel dams and integral check valves are installed at the lower edge of baffle rib 5. The fuel dams are identical to the fuel dams on baffle rib 18. The fuel dams and check valves prevent fuel from flowing away from the fuel boost pumps.

(3) A dry bay is found in each main fuel tank directly above the power plant. The dry bay protects the engine from fuel spill in the case of an engine burst. An access door permits entry into the dry bay for inspection. A drain hole with a flame arrestor permits draining any moisture which accumulates within the dry bay.

(4) The fuel tanks are normally filled using the pressure fueling system. However, an overwing fill port, found on the upper wing surface permits main tank fueling if pressure fueling equipment is not available.

E. Auxiliary Fuel Tank

(1) The auxiliary fuel tank has three compartments connected by a number of holes through the side-of-body ribs. The holes permit free flow of fuel and air between the compartments.

F. Surge Tank

(1) A surge tank is found outboard of each main fuel tank from rib 31 to rib 34. The tank collects fuel overflow from the fuel vent system. The overflow drains into the auxiliary fuel tank.

2. Component Details

A. Tank Access Doors (Fig. 2)

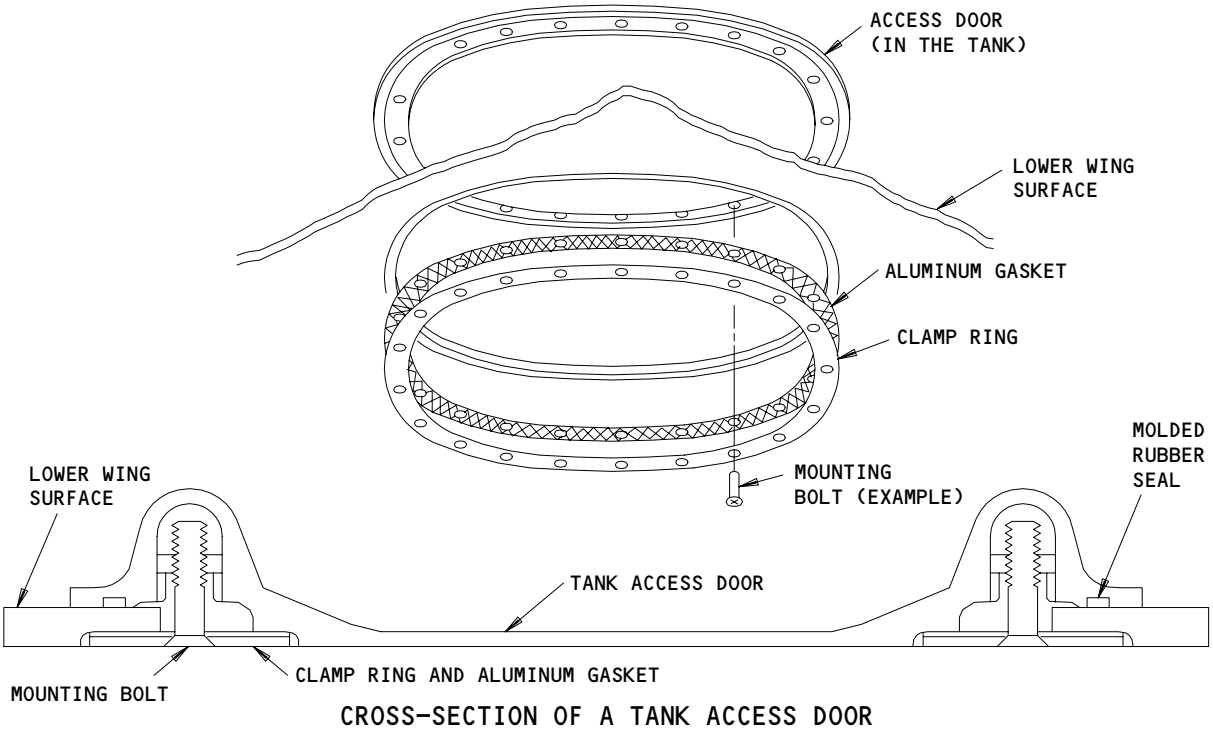

CROSS-SECTION OF A TANK ACCESS DOOR

Tank Access Doors
Figure 2

BOEING PROPRIETARY - Copyright (C) - Unpublished Work - See title page for details.

(1) Fifty nine access doors permit entry into the airplane fuel tanks for inspection or component repair. The doors are oval in shape and fit inside each tank over cutouts in the wing lower surface. A clamp ring with an aluminum gasket holds each access door in place. The gasket forms an electrical bond between the door and the lower wing surface. A molded rubber seal ring prevents fluid leakage around the door. Fuel tank defueling is necessary for removal of any access door.
(2) Access door, 136KZ, gives access to the center auxiliary fuel tank.
(3) Each main tank has 25 access doors. Each door measures 10 x 18 inches except for the two farthest outboard doors. These measure 8 x 18 inches. Six main tank access doors have fuel measuring stick assemblies installed on their inside surface (AMM 28-44-00/001).
(4) The left and right auxiliary fuel tanks each have one access door. Each auxiliary tank access door has the dimension 10 x 18 inches.
(5) Each surge tank has three access doors. Each door measures 8 x 18 inches. The inboard door has a pressure relief valve attached to the inside of the door.
(6) The following access door panels are high impact resistant panels, these access panels must not be replaced with standard access panels:

MAIN TANKS	
LEFT WING	RIGHT WING
532BB	632BB
532DB	632DB
532EB	632EB
532FB	632FB

AUXILIARY TANK	
LEFT WING	RIGHT WING
531BB	631BB

BOEING PROPRIETARY - Copyright (C) - Unpublished Work - See title page for details.

B. Overwing Fill Ports (Fig. 3)

(1) An overwing fill port is supplied for each main fuel tank. Each overwing fill port is found on the upper wing surface about two thirds of the way out on the wing. The overwing fill ports permit an alternate way of fueling the main fuel tanks if pressure equipment is not available.

(2) Each overwing fill port has an adapter, seal ring, two O-rings, a retaining nut, and a filler cap with a quick release. Lift and turn the handle of the filler cap in the counterclockwise direction to release it. It is then lifted from the adapter. Installation reverses the procedure and the downward rotation of the handle locks and seals the cap against the adapter.

C. Sump Drain Valves (Fig. 4)

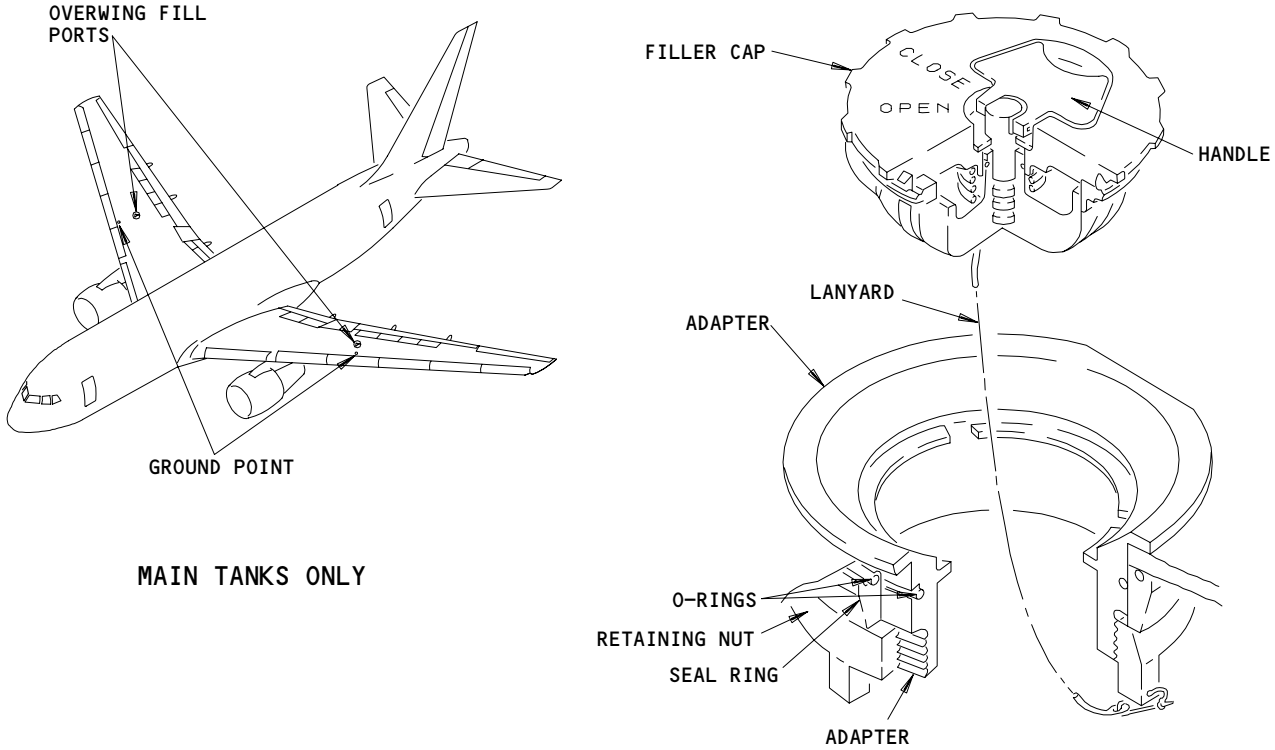

Overwing Fill Ports
Figure 3

BOEING PROPRIETARY - Copyright (C) - Unpublished Work - See title page for details.

(1) A sump drain valve is installed on the bottom of the wing, at the lowest point of each fuel tank and surge tank. This location is determined with the airplane in normal ground attitude. Each sump drain valve is a 0.5 inch diameter poppet type valve. Spring loaded closed, the primary poppet is removeable without defueling the fuel tank.

(2) The sump drain valve permits draining of water and other fuel contaminants from the fuel tank. The sump drain valve also permits draining of the fuel remaining between pump down and the sump valve when the fuel tanks are defueled.

(3) The sump drain valve can be locked in the closed position by aligning the poppet slot with lines on the valve cap. To unlock the valve, turn the poppet slot 90° with a flat blade screw driver. Once unlocked, open the valve by pushing up the poppet with a screwdriver or drain tool probe. For draining large quantities of fuel, remove the primary poppet and thread the special tool into the valve. This special tool opens a secondary poppet.

D. Fuel Dam Baffle Ribs (Fig. 5)

(1) Baffle ribs with fuel dams divide each main fuel tank into three sections. Rib 5 and rib 18 are baffle ribs. Each baffle rib is a fully closed rib web with fuel dams between the rib and the upper and lower wing skin. The fuel dams fit between the wing stringers. Flapper type check valves attach to the lower surface fuel dams. The space between rib 5 and the upper wing skin does not have any fuel dams. This permits correct fuel and air flow during fueling.

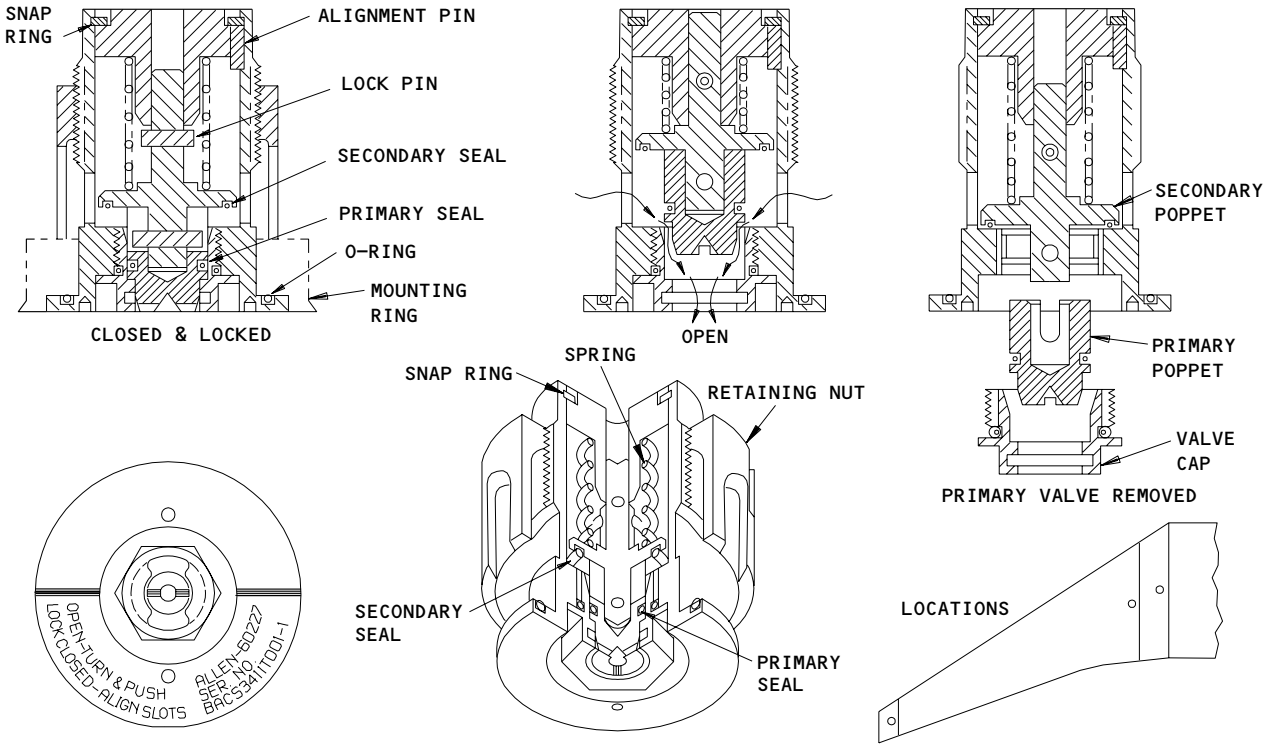

Sump Drain Valves
Figure 4

BOEING PROPRIETARY - Copyright (C) - Unpublished Work - See title page for details.

(2) The baffle ribs prevent fuel from flowing outboard in the wing. They also reduce fuel sloshing. This limits high structural loads at tank ends and prevents rapid center of gravity shifts.

(3) The check valves in the baffle rib permit fuel flow inboard and prevent flow outboard toward the wing tips. This prevents fuel from flowing away from the engine boost pumps whenever the airplane is in a roll attitude. Each check valve is a free swinging flow actuated valve. Inboard fuel flow opens the check valves and outboard flow forces the check valves closed.

(4) Baffle rib 5 contains 20 check valves. Baffle rib 18 contains 13 check valves.

E. Fuel Tank Baffle Door (Fig. 6)

(1) The fuel tank baffle door is installed on rib 5 of the main fuel tanks. The fuel tank baffle door may be removed by maintenance personnel to get access to the area between ribs 4 and 5.

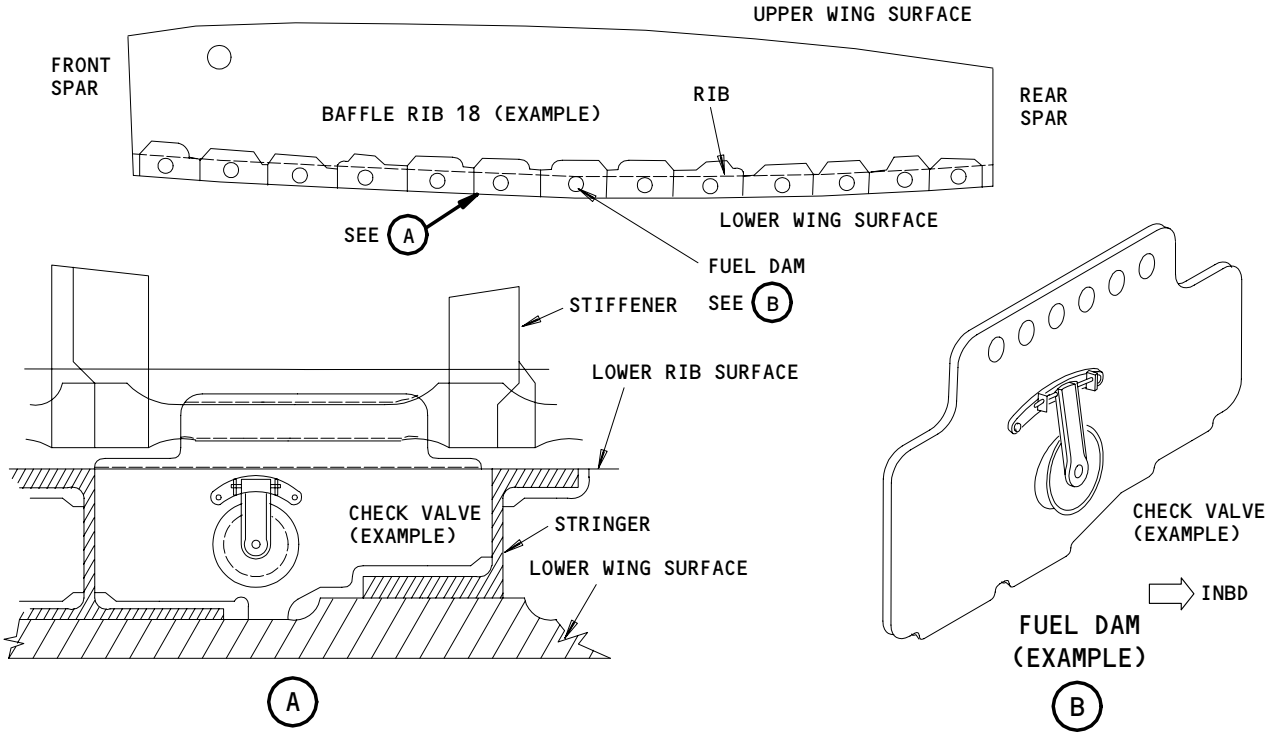

Fuel Dams
Figure 5

BOEING PROPRIETARY - Copyright (C) - Unpublished Work - See title page for details.

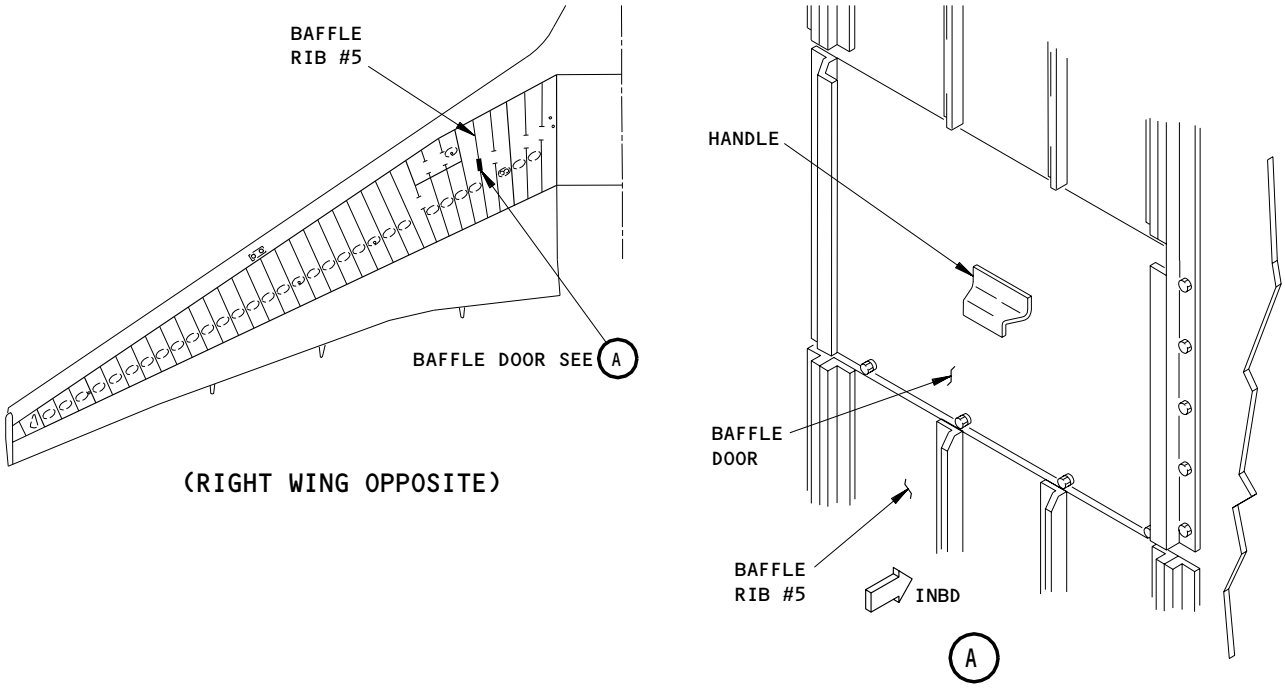

Fuel Tank Baffle Door
Figure 6

BOEING PROPRIETARY - Copyright (C) - Unpublished Work - See title page for details.

FUEL TANKS

COMPONENT	FIG. 102 SHT	QTY	ACCESS/AREA	REFERENCE
BAFFLE- LEFT RIB NO. 5	2	11	532BB, LEFT MAIN TANK, UPPER WING SURFACE	28-11-00
BAFFLE- RIGHT RIB NO. 5	2	11	632BB, RIGHT MAIN TANK, UPPER WING SURFACE	28-11-00
DOOR - BAFFLE, LEFT FUEL TANK, 532AZ	2	1	532BB, LEFT MAIN TANK, RIB NO. 5	28-11-07
DOOR - BAFFLE, RIGHT FUEL TANK, 632AZ	2	1	632BB, RIGHT MAIN TANK, RIB NO. 5	28-11-07
DOOR - CENTER AUXILIARY TANK ACCESS	1	1	136KZ, AUXILIARY TANK CENTER COMPT	28-11-02
DOOR - LEFT AUXILIARY TANK ACCESS	1	1	531BB, AUXILIARY TANK LEFT COMPT	28-11-02
DOOR - LEFT DRY BAY ACCESS	1	1	533AB, LEFT DRY BAY	28-11-01
DOOR - LEFT MAIN TANK ACCESS	1	25	532BB,532DB,532EB,532FB,541AB, 541BB,541CB,541DB,541EB,541FB, 541GB,541HB,541JB,541KB,541LB, 541MB,541NB,541PB,541QB,541SB, 541TB,541UB,541VB,541WB,541XB	28-11-01
DOOR - LEFT SURGE TANK ACCESS	1	3	542AB,542BB,542CB	28-11-03
DOOR - RIGHT AUXILIARY TANK ACCESS	1	1	631BB, AUXILIARY TANK RIGHT COMPT	28-11-02
DOOR - RIGHT DRY BAY ACCESS	1	1	633AB, RIGHT DRY BAY	28-11-01
DOOR - RIGHT MAIN TANK ACCESS	1	25	632BB,632DB,632EB,632FB,641AB, 641BB,641CB,641DB,641EB,641FB, 641GB,641HB,641JB,641KB,641LB, 641MB,641NB,641PB,641QB,641SB, 641TB,641UB,641VB,641WB,641XB	28-11-01
DOOR - RIGHT SURGE TANK ACCESS	1	3	642AB,642BB,642CB	
POPPET - CENTER AUXILIARY TANK SUMP DRAIN VALVE PRIMARY	2	2	1932SLX,194QRX, WING ROOT LOWER SKIN	28-11-05
POPPET - LEFT AUXILIARY TANK SUMP DRAIN VALVE PRIMARY	3	1	193PL, LEFT AFT UNDERWING FAIRING	28-11-05
POPPET - LEFT MAIN TANK SUMP DRAIN VALVE PRIMARY	3	1	LEFT MAIN TANK LOWER SURFACE	28-11-05
POPPET - LEFT SURGE TANK SUMP DRAIN VALVE PRIMARY	3	1	LEFT MAIN TANK LOWER SURFACE	28-11-05
POPPET - RIGHT AUXILIARY TANK SUMP DRAIN VALVE PRIMARY	3	1	194MR, RIGHT AFT UNDERWING FAIRING	28-11-05
POPPET - RIGHT MAIN TANK SUMP DRAIN VALVE PRIMARY	3	1	RIGHT MAIN TANK LOWER SURFACE	28-11-05
POPPET - RIGHT SURGE TANK SUMP DRAIN VALVE PRIMARY	3	1	RIGHT SURGE TANK LOWER SURFACE	28-11-05
PORT - LEFT OVERWING FILL	1	1	LEFT WING UPPER SURFACE	28-11-04
PORT - RIGHT OVERWING FILL	1	1	RIGHT WING UPPER SURFACE	28-11-04
VALVE - CHECK, LEFT BAFFLE RIB	3	20	532BB, LEFT MAIN TANK, LOWER RIB NO. 5	28-11-00
VALVE - CHECK, LEFT BAFFLE RIB	3	13	541JB, LEFT MAIN TANK, RIB NO. 18	28-11-00
VALVE - CHECK, RIGHT BAFFLE RIB	3	20	632BB, RIGHT MAIN TANK, LOWER RIB NO. 5	28-11-00
VALVE - CHECK, RIGHT BAFFLE RIB	3	13	641JB, RIGHT MAIN TANK, RIB NO. 18	28-11-00
VALVE - SUMP DRAIN	3	2	1932SLX,194QRX, WING ROOT LOWER	28-11-05
VALVE - SUMP DRAIN	3	1	531BB, LEFT AUXILIARY TANK	28-11-05
VALVE - SUMP DRAIN	3	1	532BB, LEFT MAIN TANK	28-11-05
VALVE - SUMP DRAIN	3	1	542AB, LEFT SURGE TANK	28-11-05
VALVE - SUMP DRAIN	3	1	631BB, RIGHT AUXILIARY TANK	28-11-05
VALVE - SUMP DRAIN	3	1	632BB, RIGHT MAIN TANK	28-11-05
VALVE - SUMP DRAIN	3	1	642AB, RIGHT SURGE TANK	28-11-05

Fuel Tanks - Component Index
Figure 101

BOEING PROPRIETARY - Copyright (C) - Unpublished Work - See title page for details.

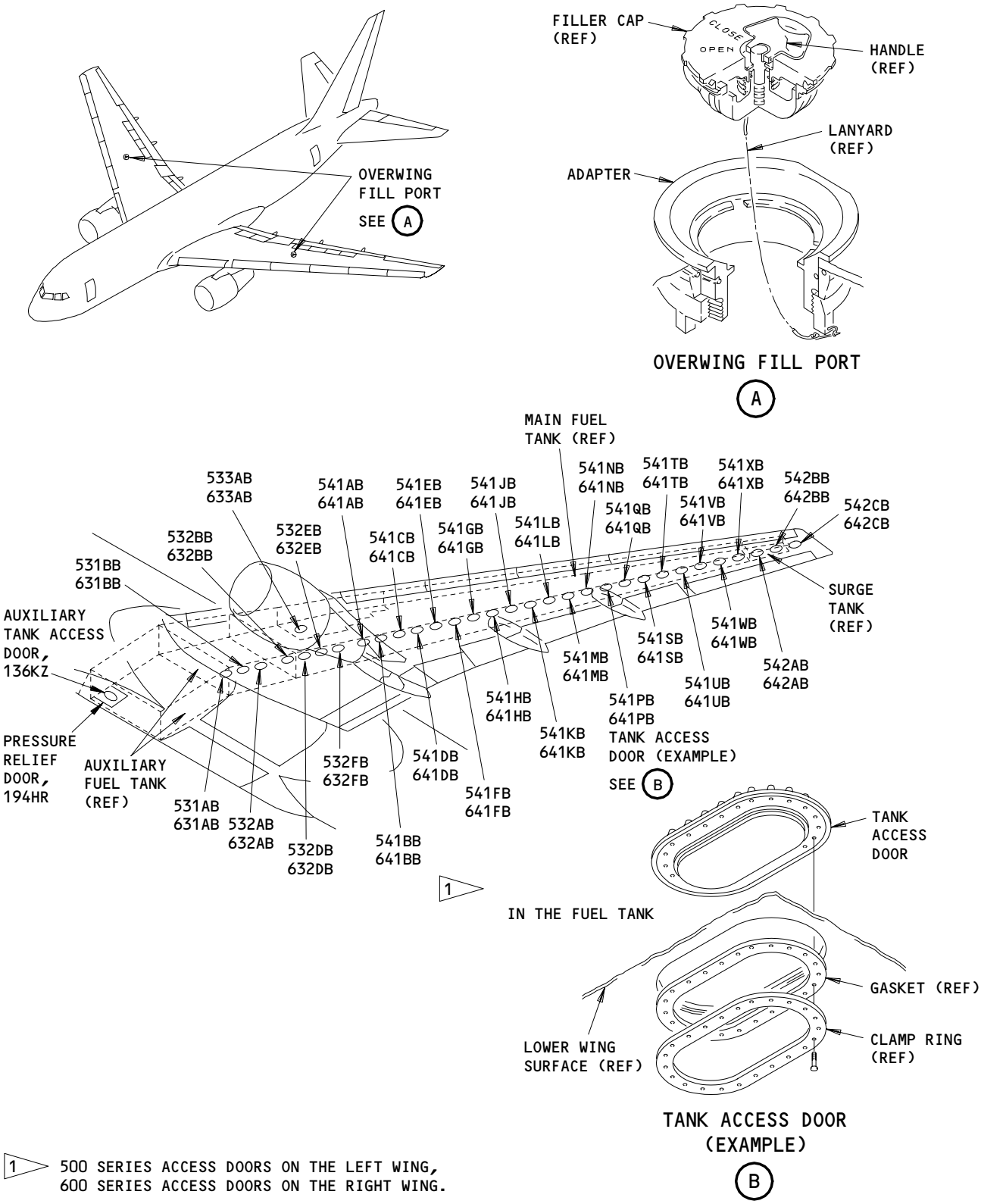

1 500 SERIES ACCESS DOORS ON THE LEFT WING, 600 SERIES ACCESS DOORS ON THE RIGHT WING.

Fuel Tanks - Component Location
Figure 102 (Sheet 1)

BOEING PROPRIETARY - Copyright (C) - Unpublished Work - See title page for details.

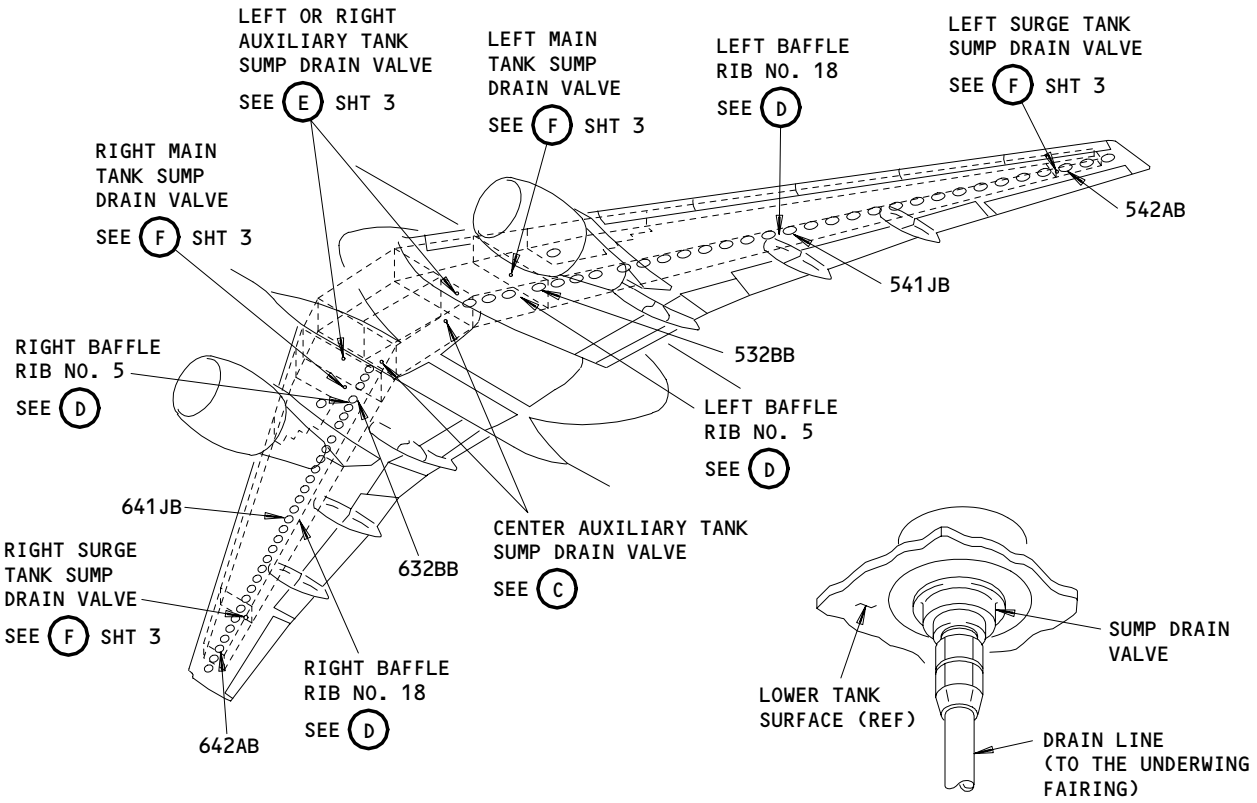

CENTER AUXILIARY TANK SUMP DRAIN VALVE

C

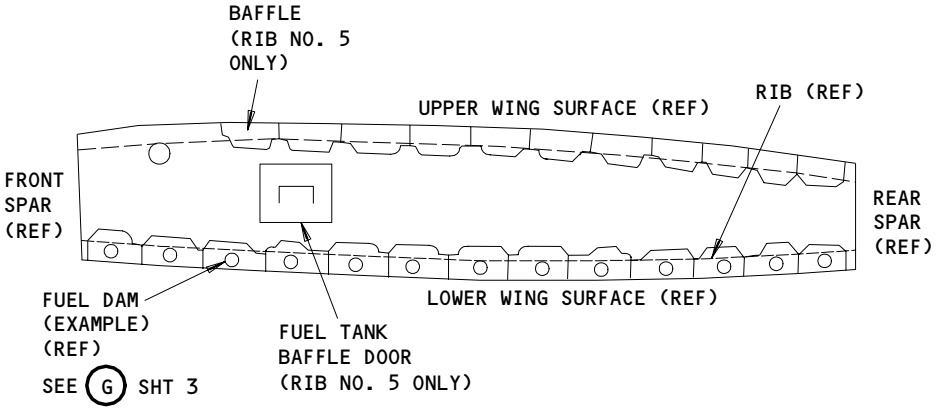

LEFT OR RIGHT BAFFLE RIB NO. 5 OR NO. 18

D

Fuel Tanks - Component Location
Figure 102 (Sheet 2)

BOEING PROPRIETARY - Copyright (C) - Unpublished Work - See title page for details.

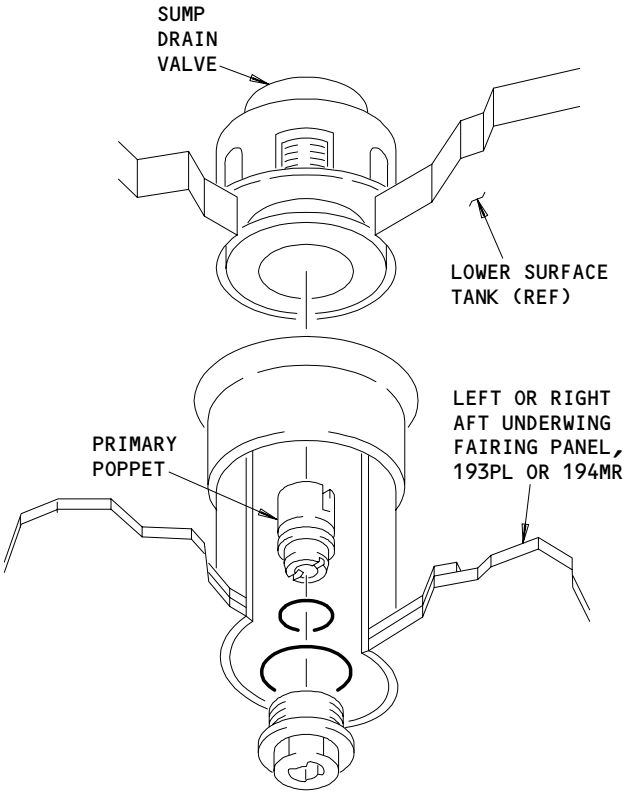

LEFT OR RIGHT AUXILIARY
TANK SUMP DRAIN VALVE

E

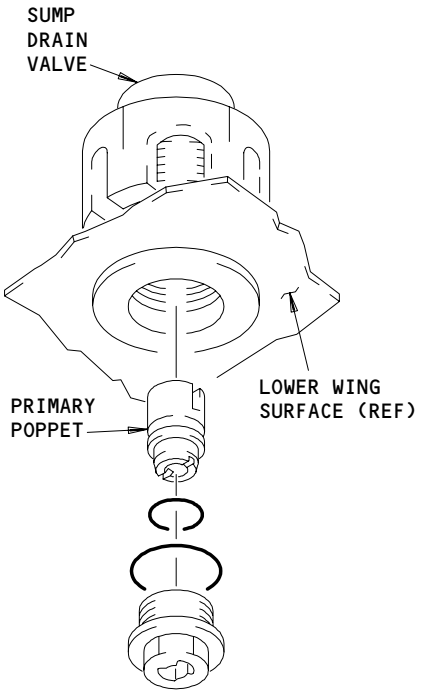

SUMP DRAIN VALVE OF THE
LEFT OR RIGHT MAIN OR SURGE TANK

F

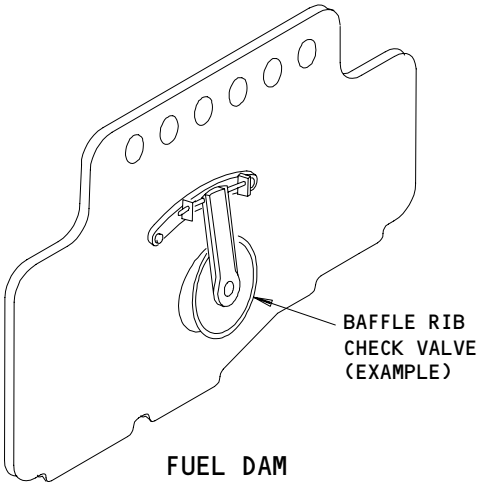

FUEL DAM
(EXAMPLE)

G

Fuel Tanks - Component Location (Details from Sht 2)
Figure 102 (Sheet 3)

BOEING PROPRIETARY - Copyright (C) - Unpublished Work - See title page for details.

FUEL TANKS - MAINTENANCE PRACTICES

1. General
   A. This procedure contains these tasks:
      (1) Purging and Fuel Tank Entry Precautions
      (2) Purging and Fuel Tank Entry
      (3) Fuel Tank Closure.

   B. If you make a decision not to do this recommended procedure, you must have an approved alternate procedure. Make sure the conditions during the purging and fuel tank entry operations give sufficient protection to the persons and equipment used in this procedure. It is possible that local fire codes, and standards make it necessary to use more restrictive procedures or more procedures than those given in the subsequent steps.
   C. The safety, fire and health limits in this procedure are used by Boeing at the manufacturing sites in the state of Washington. For fuel tank and confined space entry, Boeing is required to have an aircraft confined space entry program. This program is established to control the entry into confined spaces to protect the safety and health of persons who go into fuel tanks and other closed areas. Important requirements of the program include:
      (1) Identification and Warning Sign Placement
      (2) Observer Communication with Persons inside Confined Spaces
      (3) Entry Permit Requirements
      (4) Pre-entry Procedures
      (5) Entry Procedures
      (6) Emergency and Rescue Service
      (7) Fuel Tank Closure
      (8) Training
   D. It is recommended that a fuel tank entry program which complies with the local, state and national regulations be followed.

   TASK 28-11-00-912-137
2. Purging and Fuel Tank Entry Precautions
   A. General
      (1) This procedure contains the precautions you must obey before you purge and enter the fuel tanks for maintenance. This task contains these procedures:
         (a) Purging and Fuel Tank Entry - Definitions

BOEING PROPRIETARY - Copyright (C) - Unpublished Work - See title page for details.

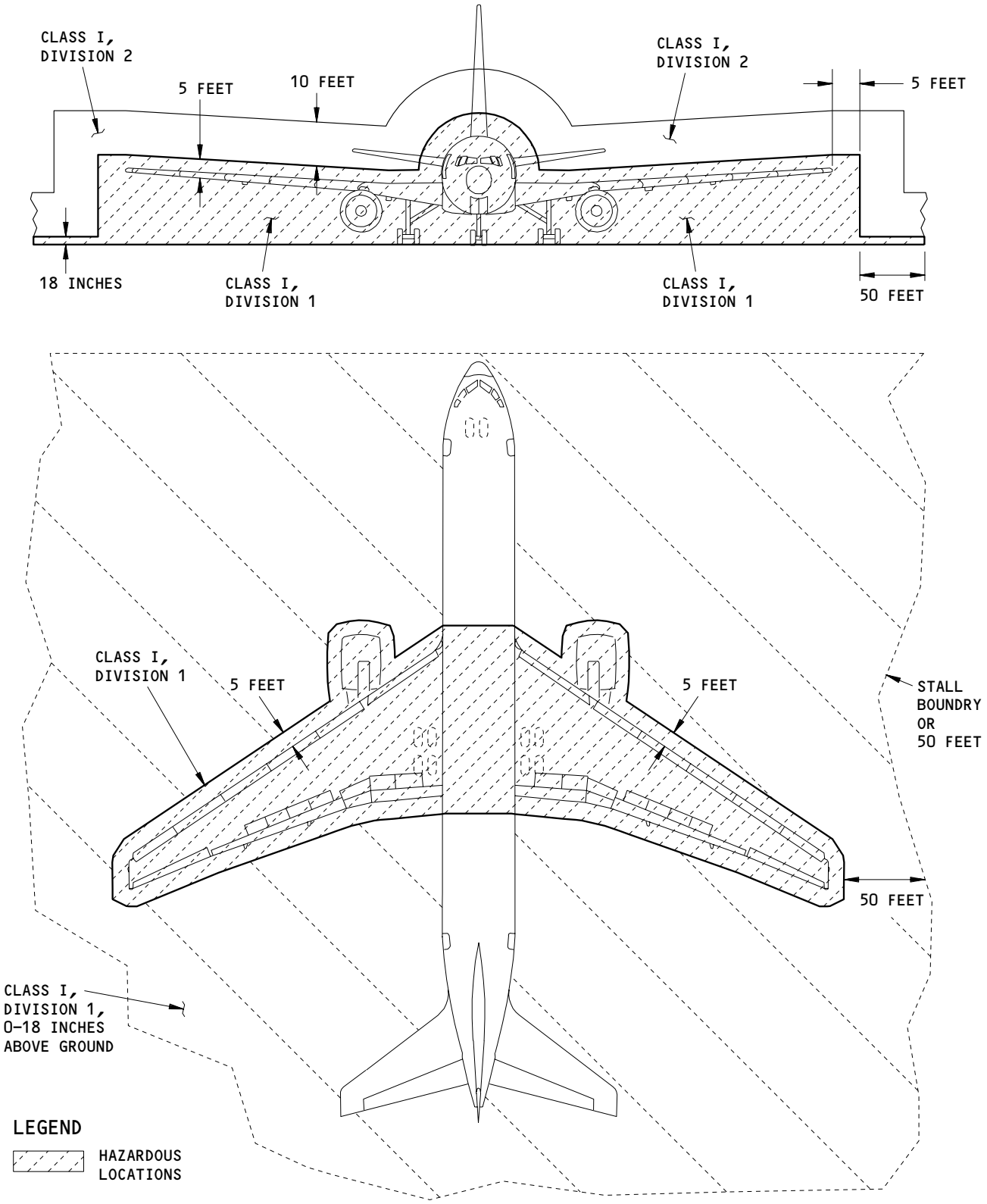

Hazardous Locations - Open Fuel Tank(s)
Figure 201

BOEING PROPRIETARY - Copyright (C) - Unpublished Work - See title page for details.

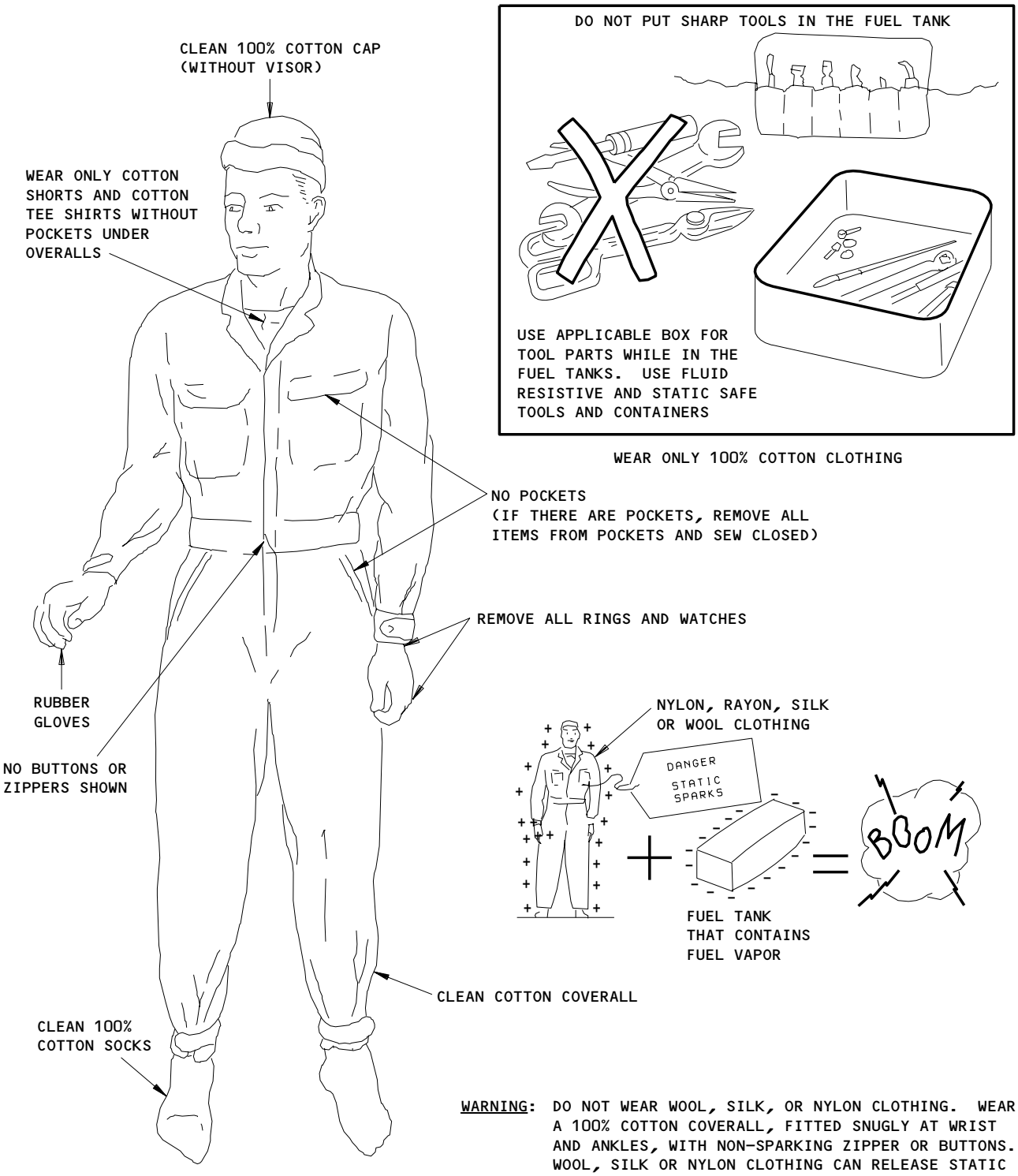

WARNING: DO NOT WEAR WOOL, SILK, OR NYLON CLOTHING. WEAR A 100% COTTON COVERALL, FITTED SNUGLY AT WRIST AND ANKLES, WITH NON-SPARKING ZIPPER OR BUTTONS. WOOL, SILK OR NYLON CLOTHING CAN RELEASE STATIC ELECTRICITY AND CAUSE AN EXPLOSION.

Fuel Tank Entry Precautions
Figure 202

BOEING PROPRIETARY - Copyright (C) - Unpublished Work - See title page for details.

(b) Purging and Fuel Tank Entry - Airplane Precautions
(c) Purging and Fuel Tank Entry - Electrical Equipment Precautions
(d) Purging and Fuel Tank Entry - Equipment Precautions
(e) Purging and Fuel Tank Entry - Personnel Precautions
(f) Purging and Fuel Tank Entry - Adverse Weather Conditions Precautions

(2) The next task, Purging and Fuel Tank Entry, contains the steps you must follow to purge and enter a fuel tank.

B. Purging and Fuel Tank Entry - Definitions

S 912-190

(1) Approved Persons:
(a) Persons who are trained and understand the dangers and procedures for fuel tank entry and are responsible to make sure the airplane, equipment and the environment is safe for maintenance operations.

S 912-191

(2) Approved Persons For Fuel Tank Entry:
(a) Persons who are trained and understand the dangers and procedures for fuel tank entry.

S 912-192

(3) Class I, Division 1, Hazardous Locations (or equivalent standard):
(a) Locations where ignitable concentrations of flammable gases or vapors can exist under standard operational conditions.
(b) Locations where ignitable concentrations of flammable gases or vapors may exist frequently because of repair or maintenance operations.
(c) Locations where ignitable concentrations of flammable gases or vapors can exist because of leakage.
(d) Locations where equipment problems or incorrect operation of equipment or processes can release ignitable concentrations of flammable gases or vapor, and can also cause failure of electrical equipment at the same time.

S 912-193

(4) Class I, Division 2, Hazardous Locations (or equivalent standard):
(a) Locations where flammable liquids or gases are handled, processed or used, but where the liquid, vapors, or gases will usually be in closed containers or closed systems. The containers or systems will not allow the release of liquid, gas or vapor in sufficient quantity to produce an ignitable fuel and air mixture unless the container or system fails or is damaged.

S 912-194

(5) Explosion-Proof Equipment:
(a) Equipment contained in a case that will not be damaged by an internal explosion caused by explosive vapors inside the unit and,

BOEING PROPRIETARY - Copyright (C) - Unpublished Work - See title page for details.

(b) Equipment which will not cause explosive vapors around the unit to ignite even when sparks, flashes or an explosion of vapor occurs inside the unit and,
(c) Equipment which operates at an external temperature which will not cause explosive vapors around the unit to ignite and,
(d) Equipment which has been approved by an independent test laboratory such as Underwriters Laboratories (UL) or Factory Mutual, for use in Class I Division 1 hazardous locations (or an equivalent standard).

S 912-195
(6) Fire-Safe Condition:
(a) 10% or less of the lower explosive limit (LEL).

FIRE-SAFE CONDITION A FIRE-SAFE CONDITION OCCURS WHEN THE VAPOR CONCENTRATION IS LESS THAN 10 PERCENT OF THE LOWER EXPLOSIVE LIMIT (LEL).

S 912-196
(7) Health-Safe Condition:
(a) An atmosphere where oxygen content is a minimum of 19.5% to a maximum of 23.5% by volume at sea level, and the vapor concentrations are below the permissible exposure limits (PEL).
(b) Because kerosene has a low vapor pressure, the concentrations are usually within the limits needed for a Health-Safe condition. Thus, you usually get very low (safe) values at usual temperatures (less than approximately 70°F). At tank temperatures of approximately 90°F, it is possible to get gas concentrations more than the Health-Safe value with kerosene. At tank temperatures of more than 90°F, it is possible to get gas concentrations more than the Fire-Safe value. It is also possible that a different type of fuel was kept in a tank that usually contains kerosene. If the purging procedure was not done, this causes high concentration values when you use the combustible gas indicator.

WARNING: THERE IS NO HEALTH-SAFE LIMIT FOR JP-4/JET-B FUEL WHICH CAN CONTAIN BENZENE. IT IS POSSIBLE THAT BENZENE CAUSES CANCER.

(c) Before you go into a fuel tank that contained JP-4, wear a full-mask respirator with an attached breathing supply.

BOEING PROPRIETARY - Copyright (C) - Unpublished Work - See title page for details.

HEALTH-SAFE CONDITION A HEALTH-SAFE CONDITION OCCURS WHEN THE OXYGEN CONTENT IS A MINIMUM OF 19.5% TO A MAXIMUM OF 23.5% BY VOLUME AT SEA LEVEL, AND THE VAPOR CONCENTRATIONS ARE BELOW THESE PERMISSIBLE EXPOSURE LIMITS:		
Fuel	Permissible Exposure Level Total Hydrocarbons TWA *[1] (ppm)	Lower Explosive Level (percent)
Aviation Gasoline	300	1.0
Jet A Jet A-1 JP-5 JP-8	160	0.7

*[1] TWA - Time Weighted Average

S 912-197
(8) Lower Explosive Limits (LEL):
(a) The minimum concentration of flammable vapors in air below which propagation of flame does not occur on contact with a source of ignition.

S 912-198
(9) Permissible Exposure Level (PEL):
(a) The time weighted average airborne concentrations of substances at which it is believed that nearly all workers may be repeatedly exposed 8 hours a day, 40 hours a week, without adverse health effects.

NOTE: The PEL limits used in this procedure are the PEL limits used by Boeing personnel during fuel tank entry. If the local PEL limits are more restrictive than the ones given in this procedure, use the equivalent local PEL limits.

S 912-199
(10) Purging or Purged (for Fuel Tank Entry):
(a) Purging an aircraft fuel tank is defined as the removal of any fuel or fuel vapor that remains after the fuel tanks are sumped. A purged fuel tank contains a nonflammable atmosphere that can be maintained by mechanical ventilation.

BOEING PROPRIETARY - Copyright (C) - Unpublished Work - See title page for details.

S 912-200

(11) Unwanted Sources of Ignition:

(a) Unwanted sources of ignition include:

1) open flames (matches, cigarette lighters etc.)
2) electrical equipment (lights, motors, sparks from engine exhaust etc.)
3) frictional hot spots
4) electromagnetic energy (radio transmissions or radars)
5) static electricity
6) lightning

C. Purging and Fuel Tank Entry - Airplane Precautions

S 912-201

(1) Do the maintenance on the fuel tanks in areas which allow the free movement of air, fire fighting equipment and other emergency equipment.

S 912-202

(2) A rope barrier must be placed around the airplane, to identify the Clas I, Division 1 hazardous locations. See Figure 201 for the distance requirements. The rope barrier must include signs or placards which state "DANGER - OPEN FUEL TANKS.

S 912-203

(3) The airplane must be correctly grounded to an approved ground before you defuel the airplane or open any fuel tanks.

S 912-204

WARNING: DO NOT USE AIRPLANE ELECTRICAL POWER WHEN FUEL TANK ACCESS DOORS ARE OPEN. A FIRE OR EXPLOSION CAN OCCUR IF FUEL VAPOR IS IGNITED BY SPARK(S) FROM ELECTRICAL EQUIPMENT. A FIRE OR EXPLOSION CAN CAUSE SERIOUS INJURY OR DEATH TO PERSONS AND CAN CAUSE DAMAGE TO EQUIPMENT.

(4) Before the fuel tank access doors are opened, all of the electrical power to and from the airplane must be removed. Placards which state that power should not be restored on the airplane until the fuel tank(s) are closed should be attached to applicable locations.

S 912-205

(5) The main, and APU batteries must be disconnected. Placards which state not to connect the batteries until the fuel tanks are closed should be attached to all disconnected battery locations.

BOEING PROPRIETARY - Copyright (C) - Unpublished Work - See title page for details.

S 912-206

(6) All safety, support and maintenance equipment must be in place before you open the fuel tank access doors. Movement of equipment can cause sparks which can cause fuel vapors to ignite.

S 912-207

(7) No painting operations are allowed on airplanes with open fuel tanks.

D. Purging and Fuel Tank Entry - Electrical Equipment Precautions

BOEING PROPRIETARY - Copyright (C) - Unpublished Work - See title page for details.

S 912-208

WARNING: FOLLOW THE SUBSEQUENT RADIO AND RADAR LIMITS. FAILURE TO FOLLOW THE SUBSEQUENT RADIO AND RADAR LIMITS CAN CAUSE A FIRE OR EXPLOSION. A FIRE OR EXPLOSION CAN CAUSE SERIOUS INJURY OR DEATH TO PERSONS AND CAN CAUSE DAMAGE TO EQUIPMENT.

(1) No radio or radar equipment should operate nearer to an open fuel tank than the distances specified in Table 201.

	SEPARATION DISTANCE (FEET)	
POWER (EIRP *[1]) OF EQUIPMENT TRANSMITTING RADAR OR RADIO *[2]	MAINTENANCE WITH OPEN FUEL TANKS PURGED	MAINTENANCE WITH OPEN FUEL TANKS NOT PURGED (or during purging)
More than 100 watts	200	200
25 to 100 watts	50	50
Less than 25 watts *[3]	10	50
Radiating ground approach control or pattern surveillance radar	300	300
Open flame, heat sources, lighted smoking material, and any other potential ignition sources	50	50

*[1] EIRP is Effective Isotropic Radiated Power in watts
*[2] This separation distance does not apply to airplane installed radio transmitters. Any limits on operations for the airplane VHF, SATCOM, HF, weather radar, etc., are listed in the airplane operations manuals.
*[3] This category includes mobile phones, pagers, two-way radios, etc. There are low power (explosion proof) radios that are approved for use in Class I division 1 hazardous locations that can be used safely in the vicinity of open, not purged, fuel cells and other areas containing fuel vapors.

TABLE 201

BOEING PROPRIETARY - Copyright (C) - Unpublished Work - See title page for details.

S 912-209

(2) Fuel in the beam of operational high-powered radar which can produce a peak power density that exceeds 5 watts per square centimeter is hazardous. Electromagnetic energy of this intensity can ignite fuel vapors and cause a fire.

S 912-319

WARNING: DURING OPEN FUEL TANK OPERATIONS, THE ENTIRE AREA AROUND THE AIRPLANE AND ANY ADJACENT AREAS THAT COULD COLLECT FUEL VAPORS ARE CLASSIFIED AS CLASS I DIVISION 1 HAZARDOUS LOCATIONS. THE HAZARDOUS LOCATION CLASSIFICATION APPLIES TO AIRPLANES BEFORE AND AFTER A FUEL TANK IS PURGED.

THE CLASS I DIVISION 1 HAZARDOUS LOCATION EXTENDS FROM THE GROUND UP TO 18 INCHES ABOVE THE GROUND. ONLY USE ELECTRICAL EQUIPMENT WHICH IS APPROVED FOR THE APPLICABLE HAZARDOUS LOCATION.

(3) Electrical equipment which is energized or operated within 50 feet horizontally and 18 inches or less above the ground of an open fuel tank and as shown in Fig. 201, must be rated explosion-proof for Class I, Division 1 hazardous locations. This includes energized plugs and receptacles. For radio and radar equipment (transmitting equipment) see Table 201 for separation distance requirements.

S 912-211

(4) Figure 201 shows the different classification of hazardous locations around airplanes with open fuel tanks.

S 912-212

(5) Only use approved explosion-proof flashlight that operate correctly in the fuel tanks.

NOTE: The use of explosion-proof lights in or near an open fuel tank is allowed only by approved persons. The air in the fuel tank must be 10 percent or less of the lower explosive limit (LEL).

S 912-213

(6) Only use explosion-proof flood extension lights and power cords which are approved to supply external light.

S 912-214

(7) Do not connect or disconnect electrical equipment from energized outlets (within 100 feet of an open fuel tank) unless the equipment is fitted with explosion-proof plugs.

BOEING PROPRIETARY - Copyright (C) - Unpublished Work - See title page for details.

S 912-215

(8) Do not use electrical test equipment which can cause sparks in a fuel tank.

S 942-293

WARNING: WHEN YOU GO INTO THE FUEL TANK, DO NOT STAND ONE FOOT OR LESS DIRECTLY IN FRONT OF THE DENSITOMETER EMITTER FOR MORE THAN 15 HOURS PER WEEK. THE DENSITOMETER EMITTER CONTAINS A LOW LEVEL RADIOACTIVE SOURCE. IF YOU STAND IN FRONT OF THE EMITTER FOR LONGER THAN THE ALLOWED TIME, IT IS POSSIBLE THAT IT CAN CAUSE HEALTH PROBLEMS.

(9) AIRPLANES WITH THE HONEYWELL FUEL QUANTITY INDICATING SYSTEM; The densitometer emitter contains a low level radioactive source. If maintenance is necessary on the densitometer emitter, contact your nearest Honeywell, Inc. representative.

E. Purging and Fuel Tank Entry - Equipment Precautions

S 912-216

(1) All metal work platforms or stands used for entry into the fuel tanks or located within a 50-foot radius of an open fuel tank (before and after the fuel tank purging) must be bonded to the airplane and grounded to an approved earth ground.

S 912-217

(2) Before you use ventilation equipment, make sure the blower or venturi is connected to the airplane ground. The ventilation blower or the venturi must be explosion-proof.

S 912-218

(3) Air ducts must be bonded to form a continuous electrical conductor, and grounded in at least one place to a static electrical ground.

S 912-219

(4) If you use the ventilation equipment to exhaust fuel vapors from the tank, static build-up on or in the air ducts can reach a level where a spark can ignite the vapors and an explosion can occur. It is strongly recommended that the air ducts be coated inside and out with a conductive coating. Each section of the air duct must be correctly bonded to each other. Air ducts made from vinyl fabric are not recommended because vinyl is an insulator of static charges. If the air duct uses a metal helical wire to create a non-collapsible duct, make sure the wire is permanently attached to a metal or conductive plastic connection on each end of the duct section.

BOEING PROPRIETARY - Copyright (C) - Unpublished Work - See title page for details.

S 912-220

(5) Equipment used to ventilate the fuel tanks or provide warm or cool air must not be turned off with the air duct in the fuel tank. The fuel vapor from the fuel tank can enter the air duct and cause an explosion at the motor. Make sure the blower is on before you put the air duct in the fuel tank. Make sure the blower remains on until the air duct is removed from the fuel tank.

S 912-221

(6) When you remove an air duct from the fuel tank or disconnect the air duct at the blower, turn the duct 180 degrees away from the purging area. This will stop the flow of fuel vapor into the air duct line.

S 912-222

(7) During fuel tank maintenance, make sure there is continuous mechanical ventilation. The fresh air flow from the ventilation equipment must maintain the oxygen levels between 19.5% and 23.5% by volume and the fuel vapor levels below 10% LEL (fire safe limit).

S 912-294

(8) Use a combustible gas indicator to monitor the environment inside the fuel tank. The indicator must be designed for Class I, Division 1 hazardous locations and calibrated for the correct type of jet fuel. The indicator must be securely attached to a ladder or stand at the fuel tank entry location. As an alternate procedure, you can take an additional combustible gas indicator into the fuel tank to monitor the environment where you will do the maintenance.

S 912-223

(9) Obey these precautions for equipment used to do maintenance in the fuel tanks:

(a) Always use a checklist to record all equipment, tooling and material that you bring into the fuel tank. Use the checklist to make sure all maintenance items are removed before you close the fuel tank.

BOEING PROPRIETARY - Copyright (C) - Unpublished Work - See title page for details.

(b) Do not use steel wool in the fuel tank. A piece of wire from steel wool is a potential ignition source.
(c) Only use approved non-static plastic containers with rounded corners to hold tools and supplies.
(d) Keep all sharp edged tools in the container at all times when not in use. Sharp edged tools can cause damage to equipment and sealant.
(e) Only use cotton wipers (BMS15-5) in open fuel tanks. When you wipe up fuel in the fuel tank, use clean cotton wipers (BMS15-5).

NOTE: Do not use paper towels or other paper products.

(f) Solvents, sealants, or other materials used in the fuel tank can be a health and fire hazard. Use the correct protective equipment for the solvent or material that is used. Protective equipment includes: respirators, eye protection, protective clothes, gloves etc.
(g) Keep the quantity of solvents that you use to a minimum. Only bring enough solvent in the tank to complete the maintenance. Apply the solvent to a clean cotton wiper (BMS15-5), not the airplane structure or sealant. After you finish with the cotton wiper (BMS15-5), put the cotton wiper (BMS15-5) in a polyethlene bag or remove the cotton wiper (BMS15-5) from the airplane. This will keep the solvent vapor to a minimum.
(h) Powered tools must be air-driven.

WARNING: ONLY USE SHOP AIR OR BOTTLED AIR AS THE SOURCE OF GAS TO POWER AIR DRIVEN EQUIPMENT. GASES OTHER THAN SHOP OR BOTTLED AIR CAN REMOVE OXYGEN FROM A CLOSED AREA. IF YOU GO INTO A CLOSED AREA WITHOUT ENOUGH OXYGEN, YOU CAN BECOME UNCONSCIOUS OR IT CAN KILL YOU.

(i) Only use shop air or bottled air as a gas source for air-driven tools. Do not use nitrogen, oxygen, carbon dioxide (CO2) or any other non-air source of gas.

F. Purging and Fuel Tank Entry - Personnel Precautions (Fig. 202)

S 912-224
(1) Make sure the persons who will go into fuel tanks are approved persons for fuel tank entry.

S 912-225
(2) Make sure observers who will watch persons in the fuel tank(s) are approved as fuel tank entry observers.

BOEING PROPRIETARY - Copyright (C) - Unpublished Work - See title page for details.

S 912-308

(3) The fuel vapors in and from the fuel tank are explosive and hazardous to your health. The fuel tanks must be in a fire-safe condition when an initial fuel tank entry is made. You must wear an approved respirator with a breathing-air supply when you go into a fuel tank that is in a fire-safe condition. It is necessary to have a good flow of air through the fuel tank to get a fire-safe condition. The air must flow continuously during the fuel tank entry procedure.

S 912-307

(4) The fuel tank must be in a health-safe condition before you can go into the fuel tank without a breathing-air supply. When the fuel tank is in a health-safe condition, at a minimum, it is recommended that a half-mask respirator with an organic vapor filter be used. It is necessary to have a good flow of air through the fuel tank to get a health-safe condition. The air must flow continuously during the fuel tank entry procedure.

S 912-312

(5) Hydrocarbon fuels that touch the skin can remove protective oils. Without protective oils, the skin can become dry, chapped, cracked, or possibly become infected. If a person breathes too much fuel vapor, the person can become dizzy, get a headache or lose his or her coordination. Jet fuel is composed of many different kinds of hydrocarbon molecules. Exposure to some of these molecules for a long time is known to cause cancer.

S 912-310

(6) Vapors from fuel or other materials (solvents etc.) used for fuel tank maintenance can replace oxygen from a confined area such as a fuel tank or dry bay. If a person goes into a confined area that contains fuel vapor (or other vapors) without an air supply, the person may not get enough oxygen. This may cause unconsciousness or death. Make sure the environment is continously monitored with a approved combustible gas indicator.

S 912-226

(7) No one is allowed to go into or remain in a fuel tank if:
   (a) the flammable vapor concentration is more than 10% of the lower explosive limit
   (b) the oxygen content of the fuel tank is below 19.5% or above 23.5%
   (c) the air ventilation system fails
   (d) a strong fuel odor is noticed

BOEING PROPRIETARY - Copyright (C) - Unpublished Work - See title page for details.

(e) a person feels any physical problems, such as trouble breathing, dizziness, irritation, confusion, light-headedness, fullness in the head, ringing sensation on the ears, nausea, headache, difficulty in breathing, sensation of apparent suffocation, immobility, unusual behavior, failure to respond to communication, or other signs of illness.
(f) there is an observed or reported hazard which may reduce the level of safety.

S 912-227
(8) Persons who work in or near an open fuel tank must not:
(a) Slide metal objects, such as tool boxes, ladders, etc.
(b) Carry matches or pocket warmers.
(c) Wear shoes with metal clips or exposed nails.
(d) Wear or use battery-operated devices such as hearing aids, electrical pacemakers or watches, pocket radios, cellular phones or paging equipment unless it is explosion-proof and allowed by approved persons.
(e) Use the tank wire harnesses as handholds.

S 912-228
(9) Persons who work in an open fuel tank must wear approved fuel tank protective clothing. Protective clothing includes:
(a) Cotton coveralls with non-sparking zippers or buttons. Do not wear wool, silk, nylon or other synthetic clothing.

WARNING: MAKE SURE THE TEMPERATURE IN THE FUEL TANK DOES NOT GET TOO HOT. IF THE FUEL TANK TEMPERATURE GETS TOO HOT, A PERSON IN THE FUEL TANK CAN HAVE HEAT-RELATED DISORDERS. IF A PERSON BECOMES TOO HOT, GET THE PERSON OUT OF THE FUEL TANK. FIND OUT IF MEDICAL ASSISTANCE IS NECESSARY.

COVERALLS THAT ARE COATED WITH SARANEX 23P WILL KEEP BODY HEAT IN. CLOSELY MONITOR A PERSON IN SARANEX 23P COVERALLS FOR SIGNS OF HEAT-RELATED DISORDERS. IF A PERSON BECOMES TOO HOT, GET THE PERSON OUT OF THE FUEL TANK. FIND OUT IF MEDICAL ASSISTANCE IS NECESSARY.

(b) Saranex coveralls are also approved for use in fuel tanks.
(c) Clean cotton boot socks or fuel cell boots.

NOTE: It is recommended that boot socks be worn over fuel cell boots when you stand in a fuel tank. This will reduce the chance that you will slip and fall down.

(d) Clean cotton head cover (doctor-type hats) with tie strings or a lint free shower-type cap with an attached elastic headband.
(e) Cotton or rubber gloves.

BOEING PROPRIETARY - Copyright (C) - Unpublished Work - See title page for details.

S 912-361

(10) If a fuel tank entry is necessary before two flights after a biocide treatment, do one of these:

(a) Flush the fuel tank with untreated fuel a minimum of two times (AMM 12-11-01/301, AMM 28-26-00/201).

NOTE: After the biocide treatment, if you refuel the fuel tank two times, it will reduce the concentration of the biocide to a low level.

(b) Move the treated fuel to a different fuel tank or defuel the applicable fuel tank (AMM 28-26-00/201).

WARNING: PUT ON THIS SPECIFIC EQUIPMENT BEFORE YOU GO INTO A FUEL TANK THAT HAS NOT BEEN REFUELED A MINIMUM OF TWO TIMES AFTER A BIOCIDE TREATMENT. BIOCIDES CAN CAUSE SKIN AND EYE IRRITATION.

1) Before fuel tank entry, put on a full face respirator, a Saranex 23P coverall and chemical resistant gloves.

NOTE: The biocide manufacturers Material Safety Data Sheet (MSDS) has information regarding the handling of the product. However, the MSDS is intended for the product before it is diluted in fuel. Once diluted, the concentration is greatly reduced.

S 912-229

(11) Persons who work in or near an open fuel tank must not remove or change clothes near an open fuel tank. You can create sufficient static electricity in the clothes to cause fuel vapor to ignite.

S 912-230

(12) Persons who work in fuel tanks must wear the correct respiratory protection for the fuel tank conditions.

(a) Persons that use respiratory protection must be trained and know the proper use and limitations of respiratory protection.

BOEING PROPRIETARY - Copyright (C) - Unpublished Work - See title page for details.

(b) An approved respirator with an attached breathing-air supply is necessary for each person who goes into a fuel tank that is in a fire-safe condition.
(c) An approved half-mask respirator with a organic vapor filter, at a minimum, is recommended for each person who goes into a fuel tank that is in a health-safe condition.
(d) Airline Hoods (or equivalent) should be worn by persons if the respirator does not fit correctly due to facial hair or other facial configurations.

S 912-231
(13) At each fuel tank entry location there must be an observer who is outside of the fuel tank. The observer's responsibility is to make sure that person(s) in the fuel tank are safe. The observer must remain outside of the fuel tank in visual contact with the access opening. The observer must be able to communicate with the person(s) inside the fuel tank at all times.
(a) There are two ways the observer and the person(s) in the fuel tank can communicate:
1) A confined space communication system designed for aircraft fuel tank use.
2) The observer and the person who will go into the tank can agree on a communication plan such as tugs on the safety rope at a set time interval.

S 912-232
(14) The observer must also keep a report that shows who is in the fuel tank and when that person comes out. A sign attached to the ladder or support equipment which states, "CAUTION - PERSONNEL INSIDE - MOVE NO EQUIPMENT", must be placed at the location of a fuel tank entry. When the personnel in the tank come out, the observer should remove the sign or place it where it does not show.

S 912-233
(15) Many local, state and national regulatory agencies require a confined space entry permit to be signed and approved before a person goes into a fuel tank. A pre-entry checklist is often required by the confined space entry permit. It is recommended that a pre-entry checklist be used before you go into a fuel tank. Figure 206 is an example of a pre-entry checklist used at Boeing facilities.

BOEING PROPRIETARY - Copyright (C) - Unpublished Work - See title page for details.

G. Purging and Fuel Tank Entry - Adverse Weather Conditions

S 912-234

(1) When thunderstorms or lightning are within a 10 mile radius of the immediate area, open fuel tank maintenance procedures should stop. Persons inside of the fuel tanks should get out. Air ducts inside the fuel tanks should be removed and the power for all support equipment should be switched off. The fuel tank access openings must be closed.

S 912-235

(2) Strong wind conditions can cause a build-up of static electricity. Large charges of static electricity can develop on support equipment while parked as a result of the movement of dust particles and air currents during strong wind conditions. Strong wind conditions can also cause the unwanted movement of items or equipment which can hit the airplane or injure persons. Wind gusts can damage the airplane structure. Fueling, defueling or open fuel tank maintenance procedures should stop if strong wind conditions are present.

TASK 28-11-00-912-185

3. Purging and Fuel Tank Entry

A. General

(1) This task contains these procedures:
- (a) Prepare the Airplane for Fuel Tank Purging
- (b) Prepare the Equipment for Fuel Tank Purging
- (c) Fuel Tank Purging
- (d) Fuel Tank Entry

(2) Make sure you read and obey the precautions in this task: Purging and Fuel Tank Entry Precautions.

B. References

(1) AMM 06-41-00/201, Fuselage Access Doors and Panels
(2) AMM 12-11-03/301, Fuel Sump Draining
(3) AMM 20-41-00/201, Static Grounding
(4) AMM 24-22-00/201, Electrical Power - Control
(5) AMM 24-31-01/401, Main Battery
(6) AMM 24-31-04/401, APU Battery
(7) AMM 27-51-00/201, Trailing Edge Flaps
(8) AMM 27-81-00/201, Leading Edge Slats
(9) AMM 28-11-01/401, Main Tank Access Door
(10) AMM 28-11-02/401, Auxiliary Tank Access Door
(11) AMM 28-11-03/401, Surge Tank Access Door
(12) AMM 28-26-00/201, Defueling
(13) AMM 32-00-15/201, Landing Gear Door Locks
(14) AMM 32-00-20/201, Landing Gear Downlocks

C. Equipment

(1) Air Compressor-Explosion-proof, for use with the Lamb Air Mover (commercially available)

BOEING PROPRIETARY - Copyright (C) - Unpublished Work - See title page for details.

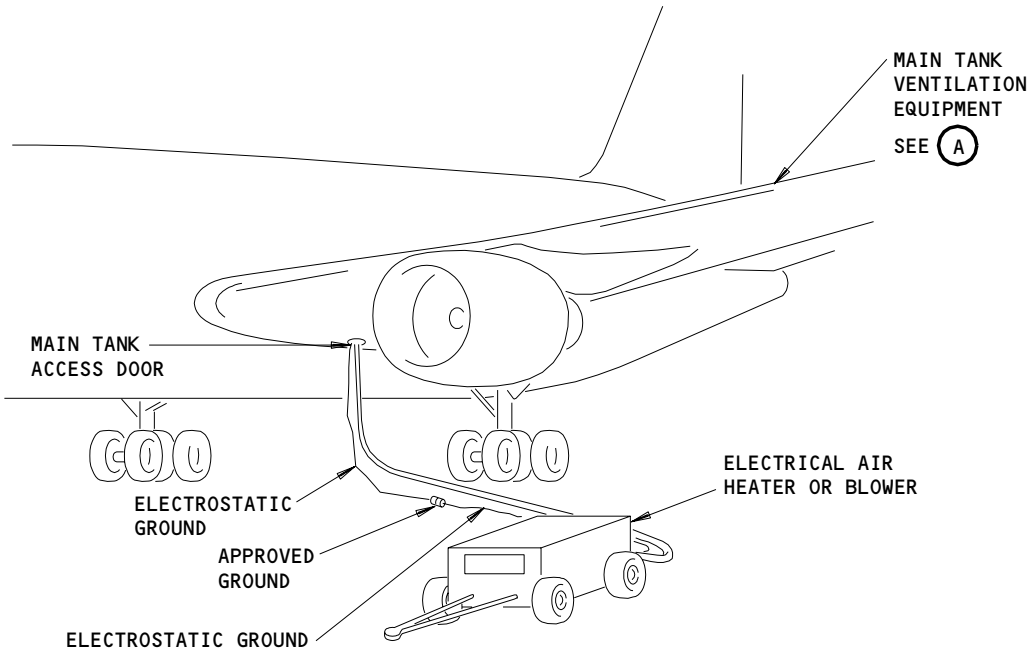

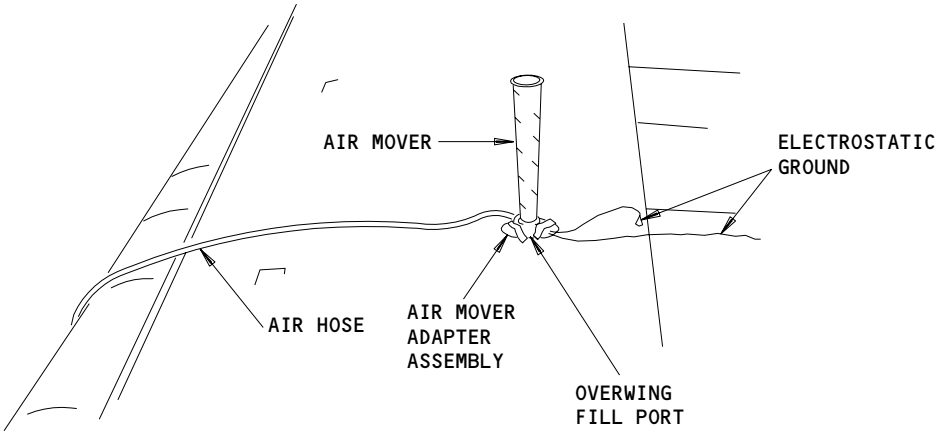

MAIN TANK VENTILATION EQUIPMENT

A

Tank Ventilation Equipment
Figure 203 (Sheet 1)

BOEING PROPRIETARY - Copyright (C) - Unpublished Work - See title page for details.

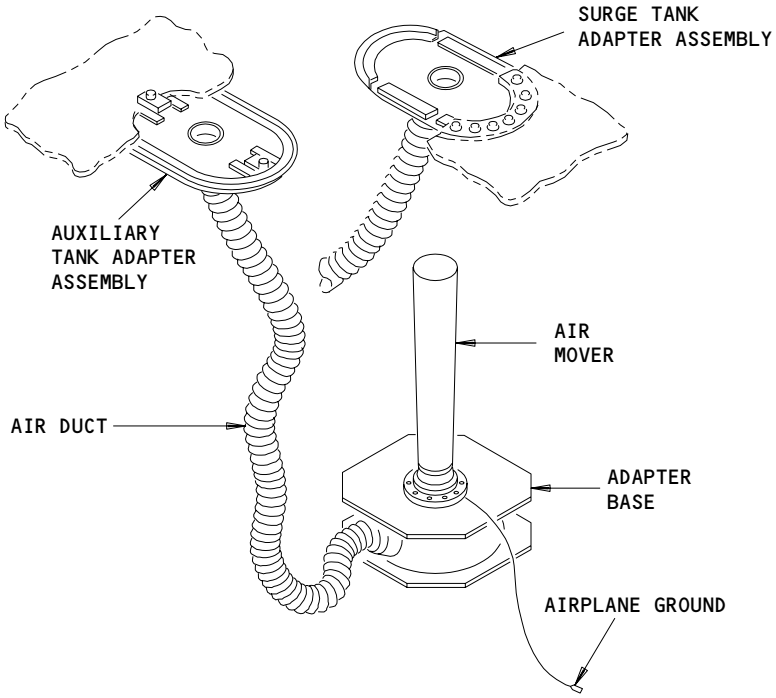

Tank Ventilation Equipment
Figure 203 (Sheet 2)

BOEING PROPRIETARY - Copyright (C) - Unpublished Work - See title page for details.

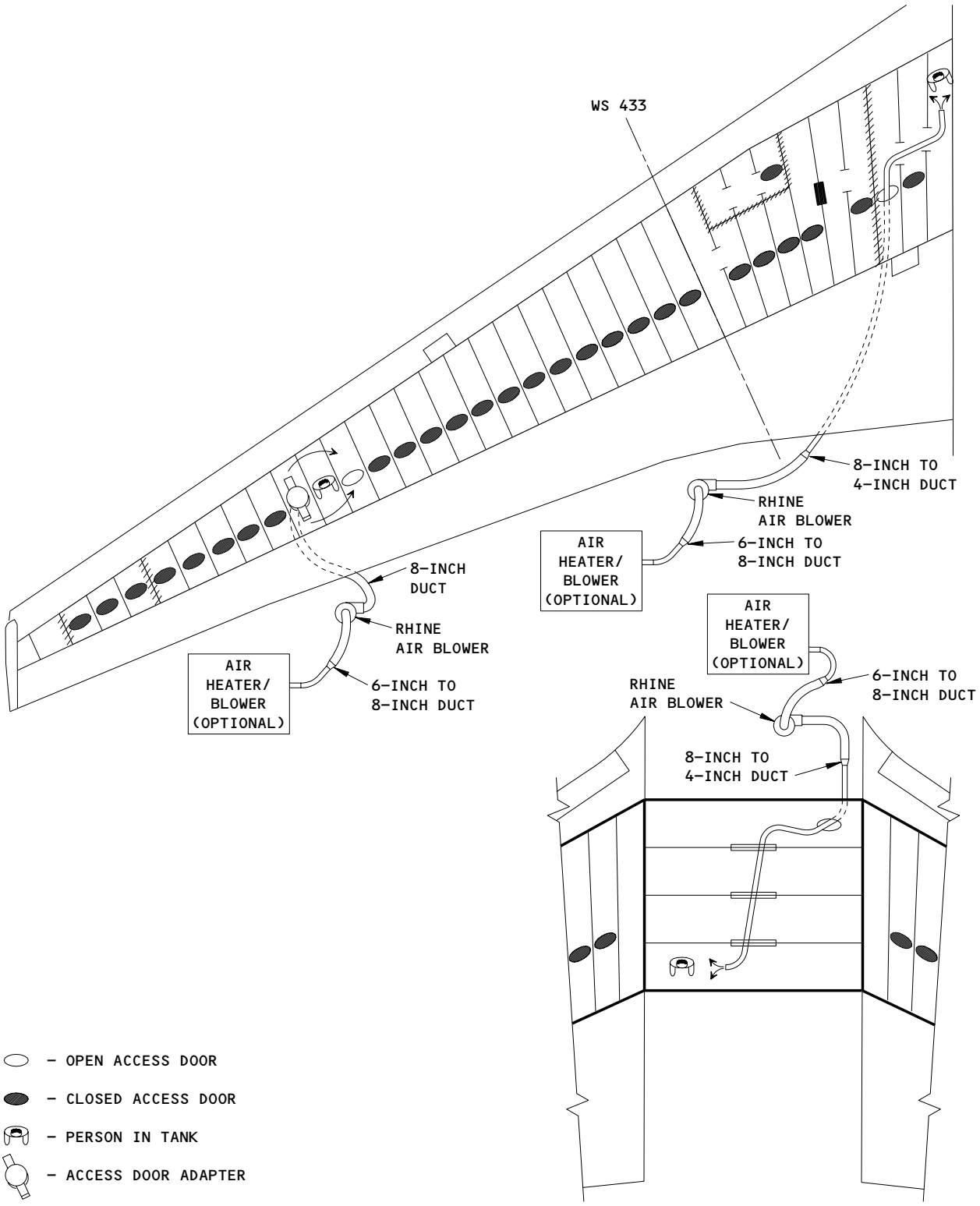

Tank Ventilation Equipment
Figure 203 (Sheet 3)

BOEING PROPRIETARY - Copyright (C) - Unpublished Work - See title page for details.

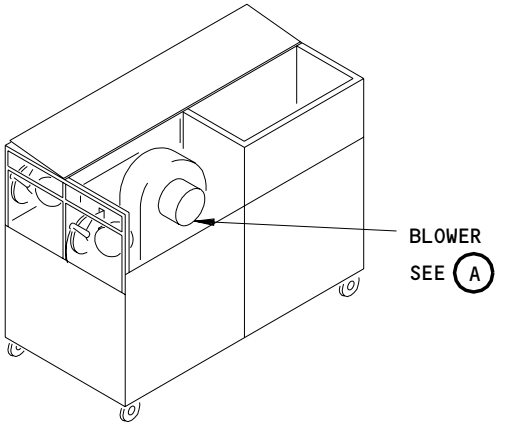

VENTILATION EQUIPMENT
(MODEL BOE-501)

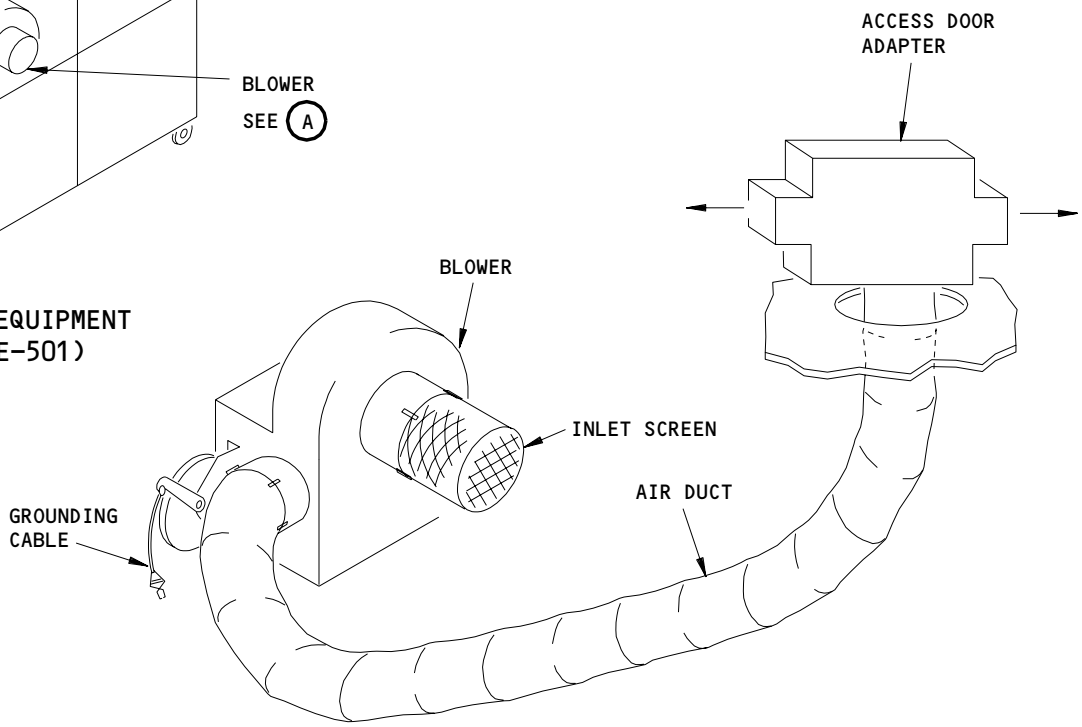

A

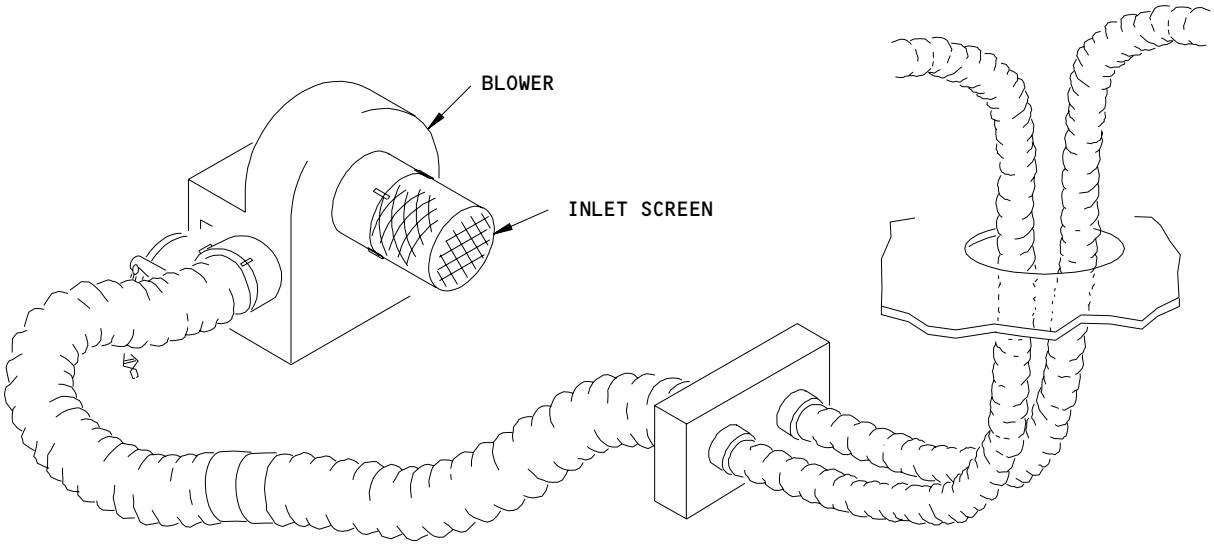

EXAMPLE CONFIGURATION FOR
VENTILATION EQUIPMENT (MODEL BOE-501)

Tank Ventilation Equipment
Figure 203 (Sheet 4)

BOEING PROPRIETARY - Copyright (C) - Unpublished Work - See title page for details.

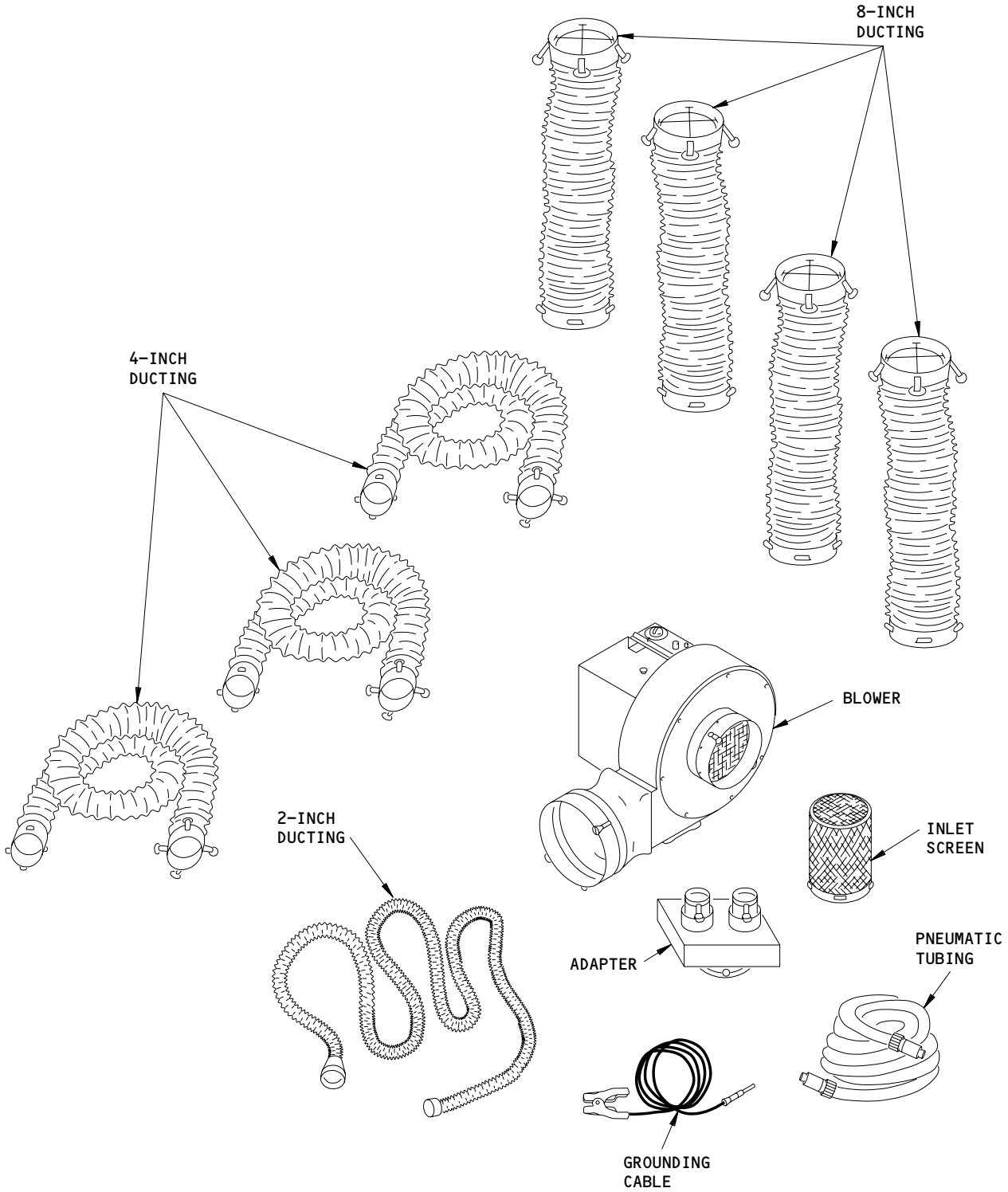

AVAILABLE VENTILATION EQUIPMENT

Tank Ventilation Equipment
Figure 203 (Sheet 5)

BOEING PROPRIETARY - Copyright (C) - Unpublished Work - See title page for details.

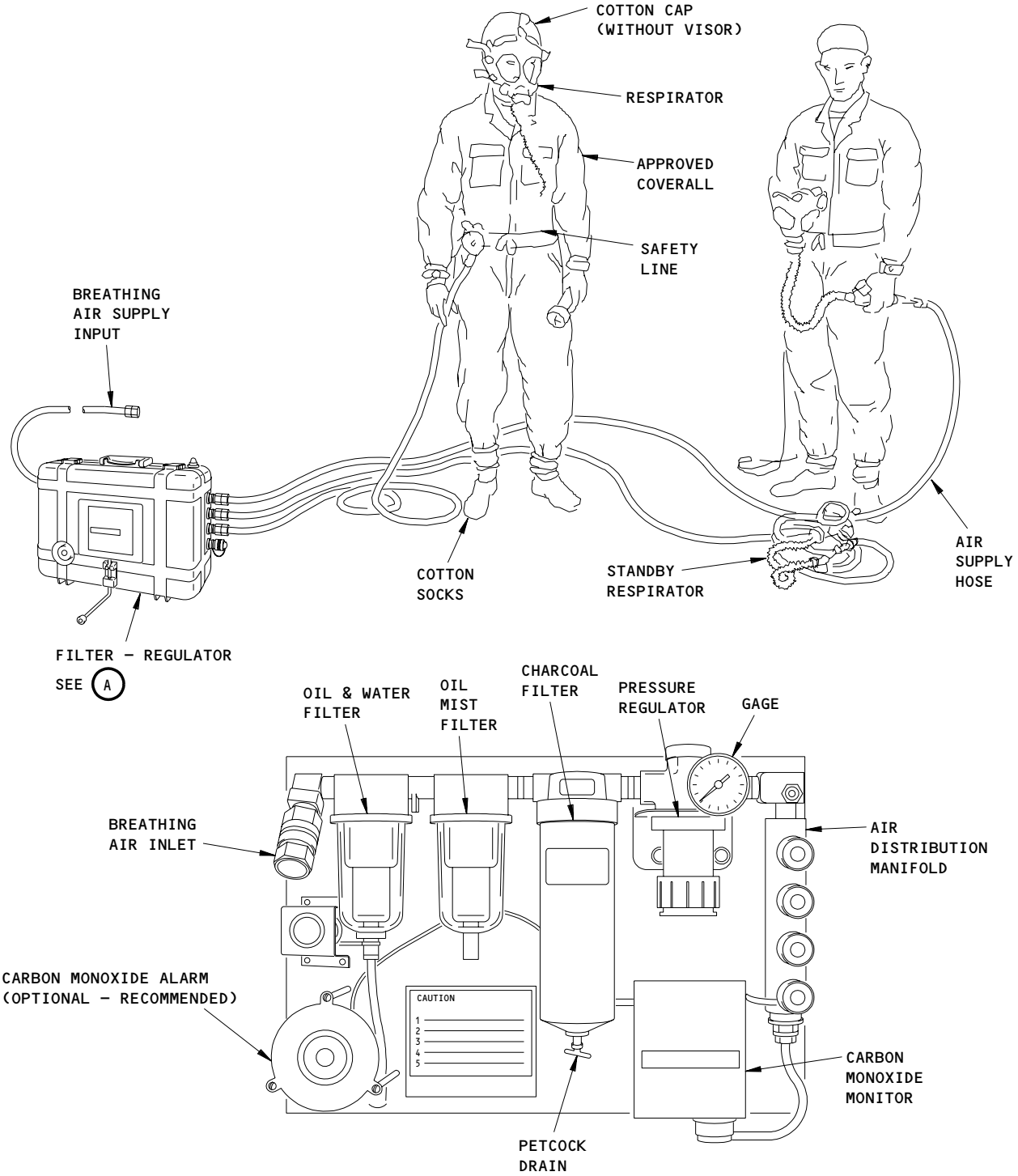

FILTER – REGULATOR
(EXAMPLE)

A

Respiratory Equipment and Clothing (Example)
Figure 204

BOEING PROPRIETARY – Copyright (C) – Unpublished Work – See title page for details.

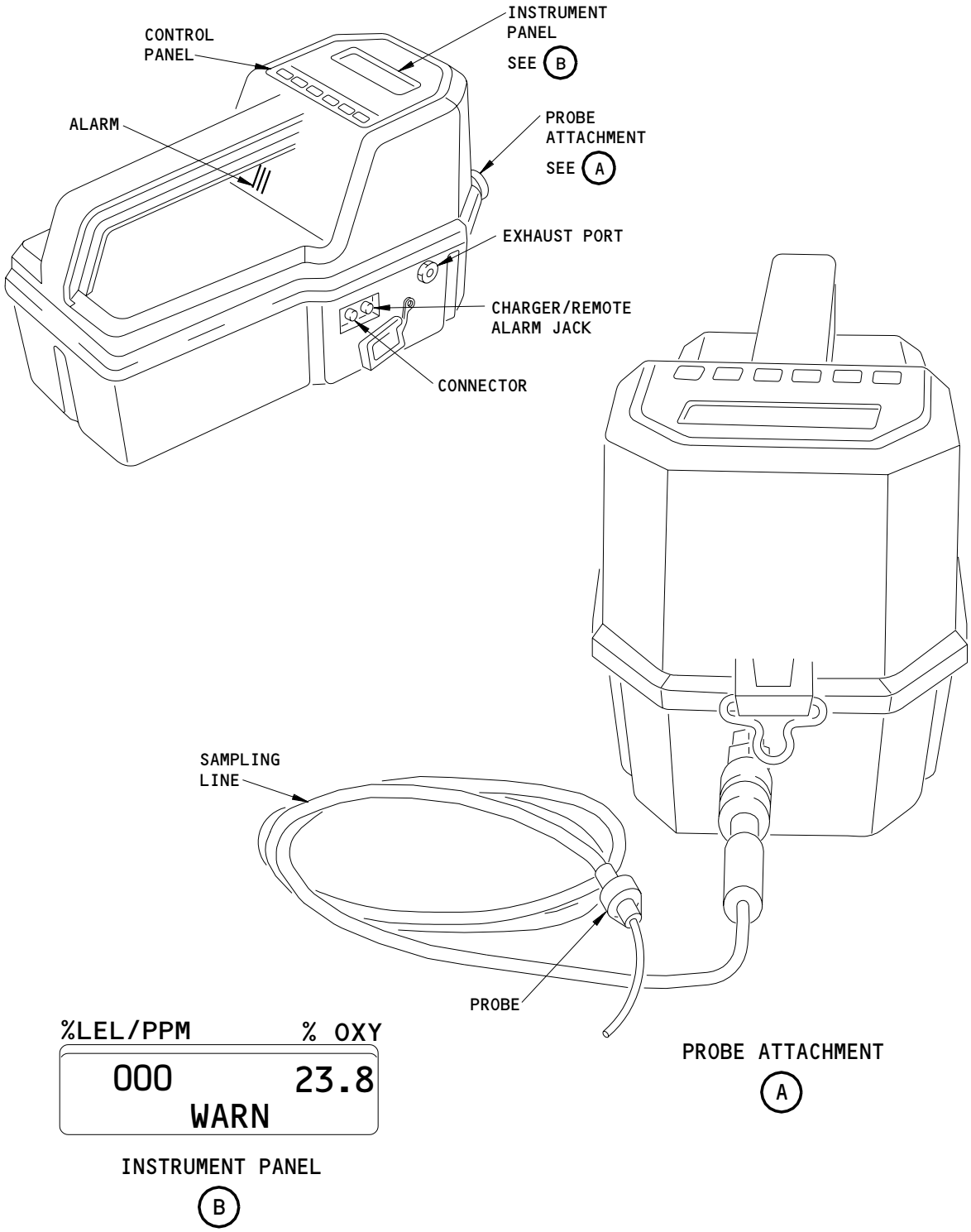

Combustible Gas Indicator (Example)
Figure 205

BOEING PROPRIETARY - Copyright (C) - Unpublished Work - See title page for details.

EXAMPLE OF A WET FUEL CELL PRE-ENTRY CHECKLIST

This checklist must be completed prior to start of wet fuel cell entry and/or at shift change PRIOR to work assignment for the continuation of tank work started by a previous shift.

Wet Fuel Cell Entry Location

Area or Building: _____ Stall: _____ Airplane: _____ Tank: _____

Shift: _____ Date: _____ Supervisor: _____

☐ 1. Airplane and adjacent equipment properly grounded.

☐ 2. Area secured and warning signs positioned.

☐ 3. Boost pump switches off and circuit breakers pulled and placarded.

☐ 4. No power on airplane: battery disconnected, external Power Cord disconnected from airplane, and external power receptacle placarded.

☐ 5. Radio and radar equipment off (see separation distance requirements).

☐ 6. Only approved explosion proof equipment and tools will be used for fuel cell entry (lights, blowers, pressure and test equipment, etc.).

☐ 7. Ensure requirements listed on Aircraft Confined Space Entry Permit are complied with, including appropriate personal protective equipment: OSH class 110 respirator at a minimum, approved coveralls, caps and foot coverings, and eye protection.

☐ 8. Trained attendant and confined space logsheet required for all wet fuel cell entries.

☐ 9. Aerators checked for cleanliness prior to use.

☐ 10. Sponges available for residual fuel mop out.

☐ 11. All plugs used have streamers attached.

☐ 12. Mechanical ventilation (venturis or blowers) installed to ventilate all open fuel cells.

NOTE: Ventilation system must remain in operation at all times while fuel cells are open. If ventilation system fails or any ill effects such as dizziness, irriation, or excessive odors are noted, all work shall stop and fuel cells must be evacuated.

☐ 13. Shop personnel entering cells and standby observers have current "fuel cell entry" certification cards. Certification requires the following training:
- Aircraft Confined Space Entry Safety
- Respirator Use and Maintenance
- Wet Fuel Cell Entry

☐ 14. Fire Department notified.

Meter Readings

☐ 15. Oxygen reading (%): _____ By: _____

☐ 16. Fuel vapor level reading (ppm): _____ By: _____

☐ 17. Combustible gas meter (LEL) reading: _____ By (FD): _____

I confirm that all entry requirements were met prior to any entry.

_____ _____

Signature of Supervisor or Designee Date

Fuel Tank Pre-Entry Checklist (Example)
Figure 206

BOEING PROPRIETARY - Copyright (C) - Unpublished Work - See title page for details.

(2) Blower - Air Heater/Blower, Explosion-proof,
Coats Model GH75-2
CAM Industries Inc.,
Kent, Washington

(3) Boots - Neoprene, Part Number RB135 (or equivalent)
Safety & Supply Co.
Seattle, Washington USA
Phone: (206) 762-8500

(4) Combustible gas indicator - explosion-proof
Use one of these indicators or equivalent:
(a) Innova FV Monitor, Model No. 72-0026-49
Thermo Electron Corporation (GasTech)
Franklin, Massachusetts USA
(b) The following Gastech products are not available for purchase, but are satisfactory for monitoring the fuel tank enviroment:
1) Gastech GT series indicator
2) Gastech 1314 Super Surveyor
3) Gastech 1314 SMPN Super Surveyor

(5) Confined Space Communication System - use one of these systems (or equivalent):
CS1-1000 or CS1-2000 Intrinsically Safe System
CON-SPACE COMMUNICATIONS INC.
P.O. BOX 1540
1160 Yew Ave.
Blaine, Washington, USA

(6) Containers, plastic - Non-static material and rounded corners, used to hold tools or absorb fuel in the fuel tank

(7) Coveralls - use one of these approved coveralls:
(a) Cotton (100%) clothing (Fig. 202, 204)
Aramark, Uniform Services
P. O. Box 3556
Seattle, Washington 98124
(b) Saranex 23P, Film Laminated Tyvex Coverall
Grainger
District Sales Office,
6725 Todd Boulevard, Seattle, Washington, USA
98188-4771

(8) Fire Extinguisher - 150 pounds, portable, wheeled (commercially available). Use one of these types of fire extinguishers:
- dry chemical
- carbon dioxide
- Halon

(9) Flashlight - Explosion-proof (commercially available)

(10) Light - Explosion-proof, Model EP-300 026 (or equivalent)
KH Industries
P.O. BOX 312
Angola, New York, USA

(11) Respiratory equipment (use the applicable equipment) (Fig. 204)
(a) Air Supply Hoses - commercially available

BOEING PROPRIETARY - Copyright (C) - Unpublished Work - See title page for details.

(b) Breathing Air Supply - 125 psig maximum output
Compressed Gas Association Commodity
Specification G-7.1-1966 Grade D
(or equivalent)

(c) Regulator Unit - Biosystems Travelpanel 50 (or equivalent)
Biosystems Inc.
P. O. Box 158
Rock Fall, Connecticut, USA

(d) Respirator - Full Face, Supplied Air Type
North 85200 Series Full Facepiece continuous flow
airline respirator (or equivalent)

(e) Respirator - Half-Face, Organic Filter Type
North 7700 Series Half Mask,
North N7500-1 Organic Vapors Cartridge
(or equivalent)

(f) Respirator - Airline Hood
North 85300 Series Disposable Airline Hood
(or equivalent)

(12) Thermometer, alcohol (commercially available)

(13) Ventilation Equipment - use one of these (or equivalent):

(a) Ventilation System - Fuel Cell - (BOE-501 or MAV-1C),
Rhine Air Inc.,
Santee, California, USA 92071
Telephone: (619) 460-5928

(b) A28003-1 Equipment - Ventilation, fuel tank

(c) Lamb Air Mover - Venturi 3-inch diameter,
Mine Safety Appliances Company
Pittsburgh, Pennsylvania

D. Consumable Materials

(1) G00034 Cotton Wiper - Process Cleaning Absorbent Wiper (cheesecloth, gauze) BMS15-5

E. Access

(1) Location Zones

133	Wing Center Section (Left)
134	Wing Center Section (Right)
531	Center Auxiliary Tank (Left)
532	Main Tank - Inboard of Rib No. 10 (Left)
541	Main Tank - Outboard of Rib No. 10 (Left)
542	Surge Tank (Left)
631	Center Auxiliary Tank (Right)
632	Main Tank - Inboard of Rib No. 10 (Right)
641	Main Tank - Outboard of Rib No. 10 (Right)
642	Surge Tank (Right)

(2) Access Panels

531BB	Auxiliary Tank Access Door (Left)
631BB	Auxiliary Tank Access Door (Right)

F. Prepare the Airplane for Fuel Tank Purging

BOEING PROPRIETARY - Copyright (C) - Unpublished Work - See title page for details.

S 942-186

WARNING: OBEY THE PURGING AND FUEL TANK ENTRY PRECAUTIONS. FAILURE TO OBEY THE PURGING AND FUEL TANK ENTRY PRECAUTIONS CAN CAUSE SERIOUS INJURY OR DEATH TO PERSONS AND CAN CAUSE DAMAGE TO EQUIPMENT.

(1) Read and obey the precautions in this task: Purging and Fuel Tank Entry Precautions.

S 652-187

(2) Do this task: Pressure Defueling (AMM 28-26-00/201).

S 652-188

(3) Drain the fuel tank sumps (AMM 12-11-03/301).

S 942-189

(4) Make sure the airplane is correctly grounded to an approved and identified ground (AMM 20-41-00/201).

S 492-238

WARNING: DO THE DEACTIVATION PROCEDURE FOR THE TRAILING EDGE FLAPS. ACCIDENTAL OPERATION OF THE TRAILING EDGE FLAPS COULD CAUSE INJURY TO PERSONS.

(5) Do the deactivation procedure for the trailing edge flaps (AMM 27-51-00/201).

S 492-239

WARNING: DO THE DEACTIVATION PROCEDURE OF THE LEADING EDGE SLAT (AMM 27-81-00/201). IF THE LEADING EDGE SLAT OPERATES ACCIDENTALLY, IT CAN CAUSE INJURY.

(6) Do the deactivation procedure of the leading edge slats (AMM 27-81-00/201).

S 492-240

(7) Make sure the downlocks are installed on the nose and main landing gear (AMM 32-00-20/201).

S 492-241

WARNING: USE THE PROCEDURE IN AMM 32-00-15/201 TO INSTALL THE DOOR LOCKS. THE DOORS OPEN AND CLOSE QUICKLY AND CAN CAUSE INJURY TO PERSONS OR DAMAGE TO EQUIPMENT.

(8) Open the doors for the landing gear and install the door locks (AMM 32-00-15/201).

BOEING PROPRIETARY - Copyright (C) - Unpublished Work - See title page for details.

S 942-242
(9) Put ropes around the airplane to identify the hazardous location areas (Figure 201), and attach these signs with words you can see clearly written on both sides:
(a) DANGER - OPEN FUEL TANKS - NO SMOKING
(b) AUTHORIZED PERSONNEL ONLY

S 862-243
(10) Make sure the fuel pump switch lights on the overhead panel, P5, are in the off position, and attach DO-NOT-OPERATE tags.

S 862-244
(11) Open these circuit breakers on the overhead circuit breaker panel, P11, and attach DO-NOT-CLOSE tags:
(a) 11M15, FUEL PUMPS L CTR
(b) 11M16, FUEL PUMPS R FWD L AFT
(c) 11M24, FUEL PUMPS R CTR
(d) 11M25, FUEL PUMPS L FWD R AFT

S 862-245
(12) Open these circuit breakers on the overhead circuit breaker panel, P6, and attach DO-NOT-CLOSE tags:
(a) 6F15, L FUEL OVRD PUMP
(b) 6F21, R FUEL OVRD PUMP
(c) 6G15, L AFT FUEL BOOST PUMP
(d) 6G18, R FWD FUEL BOOST PUMP
(e) 6G21, R AFT FUEL BOOST PUMP
(f) 6G24, L FWD FUEL BOOST PUMP

S 862-105
(13) Open the applicable circuit breakers for the system on which you will do maintenance.

S 942-257
(14) Look at the maintenance history of the airplane.
(a) Open the applicable circuit breakers for any system(s) that show a problem with wiring or electrical faults.

S 862-246
(15) Remove the electrical power from the airplane before you remove the fuel tank access doors (AMM 24-22-00/201).

BOEING PROPRIETARY - Copyright (C) - Unpublished Work - See title page for details.

S 942-247

WARNING: DO NOT USE AIRPLANE ELECTRICAL POWER WHEN FUEL TANK ACCESS DOORS ARE OPEN. A FIRE OR EXPLOSION CAN OCCUR IF FUEL VAPOR IS IGNITED BY SPARK(S) FROM ELECTRICAL EQUIPMENT. A FIRE OR EXPLOSION CAN CAUSE SERIOUS INJURY OR DEATH TO PERSONS AND CAN CAUSE DAMAGE TO EQUIPMENT.

(16) Do not supply electrical power again until you have completed this procedure: Fuel Tank Closure.

S 862-248

(17) Disconnect these airplane batteries:
(a) Main (AMM 24-31-01/401)
(b) APU (AMM 24-31-04/401).

S 942-249

(18) Attach this sign to each of the battery locations:
(a) OPEN FUEL TANKS - DO NOT CONNECT

S 942-250

(19) Attach this sign to the external power receptacle:
(a) OPEN FUEL TANKS - DO NOT PUT POWER ON

G. Prepare the Equipment for Fuel Tank Purging

S 912-251

WARNING: OBEY THE PURGING AND FUEL TANK ENTRY PRECAUTIONS. FAILURE TO OBEY THE PURGING AND FUEL TANK ENTRY PRECAUTIONS CAN CAUSE SERIOUS INJURY OR DEATH TO PERSONS AND CAN CAUSE DAMAGE TO EQUIPMENT.

(1) Read and obey the precautions in this task: Purging and Fuel Tank Entry Precautions.

S 942-252

(2) Make sure one of these portable fire extinguishers is available:
(a) One - 150 pound dry chemical wheeled extinguisher
(b) One - 150 pound CO2 wheeled extinguisher
(c) One - 150 pound Halon wheeled extinguisher

S 942-253

(3) Make sure the electrical equipment is approved and is appropriate for the hazardous location as shown in Figure 201.

S 862-254

(4) Make sure all radio or radar equipment is off and locked out if it is closer than the minimum separation distance allowed in Table 201.

BOEING PROPRIETARY - Copyright (C) - Unpublished Work - See title page for details.

S 942-255

(5) Do these steps to prepare metal support equipment such as work platforms/stands, ladders etc:

NOTE: These steps apply to all metal support equipment within a 50-foot radius of an open fuel tank.

(a) All support equipment must be in place before you begin the fuel purging procedure.
(b) Bond the support equipment at an approved airplane bonding location.
(c) Ground the support equipment to the same earth ground as the airplane.

S 492-256

(6) VENTURI TYPE VENTILATION EQUIPMENT;
Do these steps to prepare the air ventilation equipment for purging:
(a) For the main fuel tanks, do these steps (Fig. 203):
1) Go to the applicable left or right overwing fill port on top of the wing.
2) Connect an air supply hose to the air mover assembly (P/N A28003-30).
3) Bond the air mover assembly (A28003-30) to the airplane ground.
4) Remove the cap on the overwing fill port.
5) Install the air mover assembly (A28003-30) in the overwing fill port.
6) Put the exhaust horn of the air mover in the overwing fill port vertically above the wing to let the fuel vapors leave the fuel tank.
7) Put the portable air compressor a minimum of 100 feet from the fuel tank that will be opened, unless the air compressor is explosion-proof.
8) Connect the air compressor to the air mover with the air supply hose.
9) Connect a power supply to the air compressor.
(b) For the auxiliary fuel tanks or surge tanks, do these steps:
1) Assemble these ventilation equipment components (Fig. 203):
a) Tank adapter assembly - (P/N A28003-8)
b) Air mover assembly (P/N 28003-2)
c) Air supply hose
2) Make sure each flexible air duct section is attached correctly and that each section is bonded correctly.

BOEING PROPRIETARY - Copyright (C) - Unpublished Work - See title page for details.

WARNING: MAKE SURE THE AIR MOVER ASSEMBLY IS AWAY FROM THE AIRPLANE. THE EXHAUST AIR FROM THE AIR MOVER EXHAUST HORN MUST VENT AWAY FROM THE AIRPLANE STRUCTURE. IF THE EXHAUST AIR FLOWS AGAINST THE AIRPLANE STRUCTURE, A BUILD-UP OF STATIC ELECTRICITY CAN OCCUR. IT IS POSSIBLE THAT THE STATIC ELECTRICITY CAN IGNITE THE FUEL VAPOR AND CAUSE AN EXPLOSION. AN EXPLOSION CAN CAUSE SERIOUS INJURY OR DEATH TO PERSONS AND DAMAGE TO EQUIPMENT.

3) Set-up the air mover assembly (P/N A28003-2) away from the airplane.
4) Ground the air mover assembly (A28003-2) to the airplane ground.
5) Put the portable air compressor a minimum of 100 feet from the fuel tank that will be opened, unless the air compressor is explosion-proof.
6) Make sure each flexible air duct section is attached correctly and that each section is bonded correctly.
7) Connect the air compressor to the air mover assembly (A28003-2) with the air hose.
8) Connect a power supply to the air compressor.

S 492-106

(7) AIR BLOWER TYPE VENTILATION EQUIPMENT (BOE-501 OR EQUIVALENT);
Do these steps to prepare the air ventilation equipment for purging: (Fig. 203):
(a) Set-up the ventilation blower(s) in an area where the fuel tank entry will be made.
1) Make sure the ventilation blower will be in an area free from fuel vapor when the access doors are open.
(b) Attach the static grounding cable on the ventilation blower(s) to an approved ground source.
(c) Do these steps to connect an air supply to the ventilation blower:
1) If shop air is used, connect an air supply hose to the ventilation blower.
2) If a portable air compressor is used, do these steps:
a) Put the air compressor a minimum of 100 feet from the fuel tank that will be opened, unless the air compressor is explosion-proof.
b) Connect an air supply hose from the air compressor to the ventilation blower.
c) Connect the portable air compressor to a power source.
(d) Do these steps to connect the air ducts to the ventilation blower.
1) Connect the eight inch air duct to the ventilation blower outlet port.
2) Connect enough air duct segments to get to the access door where you will do maintenance.

BOEING PROPRIETARY - Copyright (C) - Unpublished Work - See title page for details.

3) Use the attached bonding connections to electrically bond each air duct segment.

(e) For the main tank maintenance outboard of wing station 433, attach the access door adapter to the end of the air duct.

(f) For the main tank maintenance inboard of wing station 433, do these steps to prepare the air ducts that will go inside the fuel tank:

NOTE: The air ducts will be positioned inside the fuel tank at the location where you will do the maintenance.

1) Attach an adapter/reducer to the end of the eight inch air duct segments.
2) Attach the four inch air ducts.
3) Use the attached bonding connections to electrically bond each air duct segment.
4) Make sure you have enough segments to route the air ducts to the maintenance area.

S 492-107

(8) HEATER AIR/BLOWER EQUIPMENT;
Do these steps to prepare the heater/air blower equipment for purging (if it is necessary):

NOTE: The use of a heater/air blower is for the comfort of persons in the fuel tank. It is not part of the air ventilation equipment which is used to remove hazardous fuel vapor during the fuel purging procedure.

(a) Set-up the heater/air blower in the area where the fuel tank entry will be made.
1) Make sure the heater/air blower will be in an area free from fuel vapor when the access doors are open.

(b) Attach the static grounding cable on the heater/air blower(s) to an approved ground source.

(c) Do these steps to connect an air supply to the blower:
1) If shop air is used, connect an air supply hose to the heater/air blower.
2) If a portable air compressor is used, do these steps:
a) Put the air compressor a minimum of 100 feet from the fuel tank that will be opened, unless the air compressor is explosion-proof.
b) Connect an air supply hose from the air compressor to the heater/air blower.
c) Connect the portable air compressor to a power source.

(d) Do these steps to connect the air ducts to the heater/air blower.
1) Connect the air duct to the heater/air blower outlet port.
2) Connect enough air duct segments to get to the maintenance area.

BOEING PROPRIETARY - Copyright (C) - Unpublished Work - See title page for details.

3) Connect the air duct segments to the inlet port on the ventilation blower (if it is necessary for your ventilation system set-up).
4) Use the attached bonding connections to electrically bond each air duct segment.

(e) Connect a power supply to the heater/air blower.

S 482-259

WARNING: MAKE SURE THE COMBUSTIBLE GAS INDICATOR IS EXPLOSION-PROOF (CLASS I, DIVISION 1 OR EQUIVALENT STANDARD) AND IS SATISFACTORY FOR USE IN A FUEL TANK. IF YOU USE A COMBUSTIBLE GAS INDICATOR THAT IS NOT INTENDED FOR USE IN A FUEL TANK, AN EXPLOSION CAN OCCUR. AN EXPLOSION CAN CAUSE SERIOUS INJURY OR DEATH TO PERSONS AND DAMAGE TO EQUIPMENT.

(9) Do these steps to prepare the combustible gas indicator (Fig. 205):

NOTE: These steps are for the combustible gas indicators called out in the equipment section of this procedure. If you use a different combustible gas indicator, use the instruction manual supplied with the indicator.

(a) Make sure the indicator is calibrated for each of these scales:

NOTE: Make sure the GASTECH GT-series combustible gas indicators are labeled for calibration with hexane gas, and that the ppm range in the channel set-up menu is set to 5000 ppm hexane.

1) Oxygen
2) Lower Explosive Limit (LEL)
3) Parts Per Million (PPM)

(b) Make sure the calibration on the combustible scales are specific to hexane gas.

(c) Make sure the alarm values are set to these limits:
1) 160 PPM
2) 10% of the LEL
3) 19.5% oxygen by volume.

(d) Do these steps to make sure the combustible gas indicator operates correctly:
1) Make sure the indicator, sampling line, and sampling probe (with dust filter) are clean and not damaged.
2) Put the indicator switch to the ON position.
3) Make sure there is enough charge on the battery to allow for the scheduled time in the fuel tank.
4) Let the indicator warm-up for 20 minutes before you look at the readings.
5) Adjust the indicator to zero in clean air for these scales:
a) Oxygen
b) PPM

BOEING PROPRIETARY - Copyright (C) - Unpublished Work - See title page for details.

c) LEL

6) If there is a negative value during the use of the indicator, adjust the indicator scale(s) to zero in clean air.

NOTE: Do not turn the indicator off before you adjust the scales.

(e) Do these steps to check the alarms:

1) To do a check of the oxygen alarm, blow across the probe until the alarm goes on (19.5%).

2) To check the PPM and LEL scales, hold the tip of the probe over a solvent bottle or some solvent on a rag until the alarm goes on.

(f) Put the combustible gas indicator on a stand or ladder next to the access door where you will enter the fuel tank.

1) To prevent the accidental movement of the combustible gas indicator, safely attach the indicator to the stand or ladder.

H. Fuel Tank Purging

S 912-260

WARNING: OBEY THE PURGING AND FUEL TANK ENTRY PRECAUTIONS. FAILURE TO OBEY THE PURGING AND FUEL TANK ENTRY PRECAUTIONS CAN CAUSE SERIOUS INJURY OR DEATH TO PERSONS AND CAN CAUSE DAMAGE TO EQUIPMENT.

(1) Read and obey the precautions in this task: Purging and Fuel Tank Entry Precautions.

S 492-261

(2) VENTURI TYPE VENTILATION EQUIPMENT;
Do these steps to install the air ventilation equipment (Fig. 203):

(a) For the main fuel tanks, do these steps:

1) Remove one or more main tank access doors to have a good flow of air through the fuel tank (AMM 28-11-01/401).

2) Install rubber protectors around the openings of the main tank access doors.

3) Start the air supply connected to the air mover.

(b) For the surge tanks, do these steps:

1) Remove the surge tank access doors (AMM 28-11-03/401).

2) Install the tank adapter assembly (A28003-8) to one of the surge tank access doors (Fig. 203).

3) Start the air supply connected to the air mover.

(c) For the auxiliary fuel tank, do these steps:

1) Remove all of the auxiliary tank access doors (AMM 28-11-02/401).

BOEING PROPRIETARY - Copyright (C) - Unpublished Work - See title page for details.

2) Install the air mover assembly (A28003-2) to one of these auxiliary tank access doors:
   a) 531BB
   b) 631BB
3) Start the air supply connected to the air mover.

S 492-262

(3) AIR BLOWER TYPE VENTILATION EQUIPMENT (BOE-501 OR EQUIVALENT);
Do these steps to install the air ventilation equipment (Fig. 204):

WARNING: DO NOT STOP OR START THE VENTILATION BLOWER WHILE THE AIR DUCT IS IN THE FUEL TANK. THE FUEL VAPOR FROM THE FUEL TANK COULD CAUSE AN EXPLOSION AT THE BLOWER MOTOR. AN EXPLOSION CAN CAUSE SERIOUS INJURY OR DEATH TO PERSONS OR DAMAGE TO EQUIPMENT.

(a) Start the ventilation blower before you put the air duct in the fuel tank.
(b) For the surge tank and the main tank outboard of wing station 433, do these steps:
   1) At the location where you will do maintenance, remove three adjacent access doors (AMM 28-11-01/401, AMM 28-11-03/401).

      NOTE: Usually the middle access door is the door where you will go into the fuel tank.

   2) Install rubber protectors around the openings of the main tank access doors.
   3) Install the access door adapter to the access door (the outboard access door is the preferred door).
   4) Bond the access door adapter to the airplane structure.
   5) Make sure there will be a flow of air into the area where you will do the maintenance.
(c) For the main tank inboard of wing station 433, do these steps:
   1) Remove the access door where you will do the maintenance (AMM 28-11-01/401).
   2) Install rubber protectors around the openings of the main tank access doors.
   3) Put the air duct inside the open access door.
   4) Use the pigtail on the end of the air duct to bond the air duct to the airplane structure.
   5) Make sure there will be a flow of air into the area where you will do the maintenance.
(d) For the auxiliary fuel tank, do these steps:
   1) Remove all of the auxiliary tank access doors (AMM 28-11-02/401).
   2) Put the four inch air duct inside the open access door where you will do the maintenance.
   3) Use the pigtail on the end of the air duct to bond the air duct to the airplane structure.

BOEING PROPRIETARY - Copyright (C) - Unpublished Work - See title page for details.

4) Make sure there will be a flow of air into the area where you will do the maintenance.

S 482-263

(4) After the air supply has operated for approximately 30 minutes, put the sampling line of the combustible gas indicator (Fig. 205) as far into the fuel tank as possible.

NOTE: It is recommended that you take the combustible gas indicator value regardless of the type of fuel that was contained in the fuel tank. If the fuel tank had contained kerosene only, then the combustible gas indicator should show zero. This shows that the tank atmosphere is in fire-safe and health-safe condition.

S 482-314

(5) Wait one minute for each foot of sampling line before you take a reading.

S 482-315

(6) Use Table 202 to convert the values on the combustible gas indicator to the actual levels.

NOTE: If you use a combustible gas indicator that is not listed below, follow the manufacturer's instructions to get the actual values.

COMBUSTIBLE GAS INDICATOR	FOR PPM MULTIPLY VALUE BY:	FOR LEL, MULTIPLY VALUE BY:
GASTECH 1314	2	3
GASTECH 1314SMPN	2	3
GASTECH GT SERIES	2	3

Table 202

BOEING PROPRIETARY - Copyright (C) - Unpublished Work - See title page for details.

S 492-264

WARNING: DO NOT USE A HEATER/AIR BLOWER UNTIL THE FUEL VAPOR CONCENTRATION IS 10% OR LESS OF THE LOWER EXPLOSIVE LIMIT AS SHOWN BY A COMBUSTIBLE GAS INDICATOR. IF THE FUEL VAPOR CONCENTRATION IS NOT 10% OR LESS OF THE LOWER EXPLOSIVE LIMIT, IGNITION OF THE FUEL VAPORS COULD OCCUR.

(7) When the combustible gas indicator shows the fuel vapor concentration is 10% or less of the lower explosive limit, you can put warm or cool air in the fuel tank through the tank access opening with an explosion-proof heater/air blower.

NOTE: The use of warm or cool air is for the comfort of persons in the fuel tank. It is not part of the purging procedure.

S 492-110

WARNING: DO NOT STOP OR START THE HEATER/AIR BLOWER WHILE THE AIR DUCT IS IN THE FUEL TANK. THE FUEL VAPOR FROM THE FUEL TANK COULD CAUSE AN EXPLOSION AT THE HEATER OR BLOWER MOTOR. A FIRE OR EXPLOSION CAN CAUSE SERIOUS INJURY OR DEATH TO PERSONS AND CAN CAUSE DAMAGE TO EQUIPMENT.

(8) Start the heater/air blower before you put the air duct in the fuel tank.

S 492-111

(9) Put the air duct for the heater/air blower in the fuel tank through the tank access opening.

S 492-112

(10) Bond the air duct to the airplane structure.

S 942-114

(11) Continue to have a good flow of air through the fuel tank with the air mover until you prepare to the close the fuel tank.
(a) Read the combustible gas indicator values every half hour or less.

S 942-265

(12) If fuel vapors get into the fuel tank that was in a fire-safe condition, get all persons out of the fuel tank until you make sure the air in the fuel tank is in a fire-safe condition again.

S 942-266

(13) Go into the fuel tank per the "Fuel Tank Entry" procedure to do maintenance.

BOEING PROPRIETARY - Copyright (C) - Unpublished Work - See title page for details.

I. Fuel Tank Entry

S 912-267

WARNING: OBEY THE PURGING AND FUEL TANK ENTRY PRECAUTIONS. FAILURE TO OBEY THE PURGING AND FUEL TANK ENTRY PRECAUTIONS CAN CAUSE SERIOUS INJURY OR DEATH TO PERSONS AND DAMAGE TO EQUIPMENT.

(1) Read and obey the precautions in this task: Purging and Fuel Tank Entry Precautions.

S 972-268
(2) Complete the confined space entry permit (if it is a requirement).

S 972-269
(3) Use the pre-entry checklist (an example is given in Figure 206).

S 492-270
(4) Do these steps to prepare the respirators for fuel tank entry:
(a) Use Table 203 to find out what level of respiratory protection is necessary.
(b) If the fuel tank is in a fire-safe condition, wear a full-face respirator with an attached breathing-air supply.

WARNING: PUT ON AN APPROVED RESPIRATOR WITH ATTACHED BREATHING-AIR SUPPLY BEFORE YOU GO INTO A FUEL TANK THAT WAS FILLED WITH JP-4/JET-B FUEL. THERE IS NO HEALTH-SAFE LIMIT FOR JP-4 /JET-B WHICH CAN CONTAIN BENZENE. IT IS POSSIBLE THAT BENZENE CAUSES CANCER.

(c) If the fuel tank contained JP-4 or Jet B, wear a full-face respirator with an attached breathing-air supply.

NOTE: There is not a health-safe limit for JP-4 or Jet B.

(d) If the fuel tank is in a health-safe condition, wear a full face respirator with an attached breathing-air supply, or at a minimum, a half-face respirator with an organic vapor filter.
(e) Connect the subsequent respirators to the air supply (Fig. 204):
1) One respirator for the person who goes into the fuel tank.
2) Two emergency rescue respirators.
(f) Make sure air gets to the respirators.
(g) Make sure the respirator system (regulator, mask etc.) is clean.

NOTE: When you use the respirator, you should regularly drain moisture from the filter on the regulator. If you drain dirt or oil from the filter, or if the air in the respirator smells bad, replace the filter.

BOEING PROPRIETARY - Copyright (C) - Unpublished Work - See title page for details.

(h) Make sure the emergency air supply and respirators operate correctly.

FIRE-SAFE CONDITION

A FIRE-SAFE CONDITION OCCURS WHEN THE VAPOR CONCENTRATION IS LESS THAN 10% OF THE LEL.

HEALTH-SAFE CONDITION

A HEALTH-SAFE CONDITION OCCURS WHEN THE OXYGEN CONTENT IS A MINIMUM OF 19.5% TO A MAXIMUM OF 23.5% BY VOLUME AT SEA LEVEL, AND THE VAPOR CONCENTRATIONS ARE BELOW THESE PERMISSIBLE EXPOSURE LIMITS:

Fuel	Permissible Exposure Level Total Hydrocarbons TWA *[1] (ppm)	Lower Explosive Level (percent)
Aviation Gasoline	300	1.0
Jet A Jet A-1 JP-5 JP-8	160	0.7

*[1] TWA - Time Weighted Average

Table 203

BOEING PROPRIETARY - Copyright (C) - Unpublished Work - See title page for details.

S 942-272

(5) Remove these items before you go into a fuel tank:
   (a) all jewelry - rings, bracelets, wrist watches etc.
   (b) matches
   (c) pocket warmers
   (d) Hearings aid devices or other battery operated equipment.

S 942-273

(6) Remove any clothes made of this material:
   (a) wool
   (b) silk
   (c) nylon
   (d) synthetic clothing.

S 942-274

(7) Put on these approved protective clothes (Fig. 202):
   (a) cotton or SARANEX 23P coveralls (non-sparking zippers or buttons)
   (b) clean cotton head cover
   (c) approved cotton or rubber gloves
   (d) safety glasses or face shield

   CAUTION: DO NOT PUT ON COTTON SOCKS UNTIL YOU ARE TO GO INTO THE FUEL TANK. IF THE COTTON SOCKS ARE NOT CLEAN, YOU CAN CAUSE DAMAGE TO THE FUEL TANK.

   (e) 100% cotton socks and/or fuel cell boots
   (f) Put rubber bands around your wrists and ankles to hold clothes tight.

S 492-117

(8) Attach a safety line to the person who goes into the fuel tank.

S 942-118

(9) Make sure the person who goes into the fuel tank and the person who watches agree on safety signals.

BOEING PROPRIETARY - Copyright (C) - Unpublished Work - See title page for details.

S 942-135
(10) If a confined space communication system is used, attach the system.
(a) Do a check to make sure the system operates correctly.

S 492-119
(11) Put on the necessary respiration protection.

S 282-120
(12) Make sure the respirator operates.

S 912-316
(13) Do these steps if you are the observer:
(a) Make sure the confined space entry permit is complete and approved (if this is a requirement).
(b) Make a record that shows the time and who is inside the fuel tank.
(c) Attach this sign at the fuel tank entry location where it can be seen:
1) CAUTION - PERSONNEL INSIDE - MOVE NO EQUIPMENT
(d) Make sure you and the person(s) who will go into the tank agree that the checklist items are complete.
(e) Make sure you and the person(s) who will go into the tank agree on communication signals and set a communication time interval.
(f) Look at the filter-regulator to make sure the supplied air system operates correctly.
(g) Keep visual contact with the fuel tank entry location.
(h) Keep constant communication with the person(s) in the fuel tank.
(i) Look at the combustible gas indicator to make sure the air in the fuel tank is at 10% or less of the lower explosive limit.
(j) Do not put your head in the fuel tank access hole unless you have the correct respirator on for the condition of the tank, and there is another observer to watch you.

NOTE: This is considered the same as a fuel tank entry.

BOEING PROPRIETARY - Copyright (C) - Unpublished Work - See title page for details.

(k) Look out for any changes which could cause a dangerous condition.
(l) Make sure person(s) in the fuel tank get out if there is a dangerous condition.

S 942-123
(14) Persons with respirators must touch the identified airplane ground to release static electricity before they go into the fuel tank.

S 492-275
(15) Go into the fuel tank.

S 482-276
(16) As an alternate procedure, you can take an additional combustible gas indicator into the fuel tank to monitor the environment where you will do the maintenance.

S 492-277
(17) If it is necessary for your air ventilation system, route the air duct to the maintenance area (Fig. 204).
(a) Bond the air duct to the airplane structure.

BOEING PROPRIETARY - Copyright (C) - Unpublished Work - See title page for details.

S 942-124

WARNING: MAKE SURE TO WEAR THE CORRECT RESPIRATION PROTECTION FOR THE CONDITION OF THE FUEL TANK. PERSONS WHO BREATHE HIGH CONCENTRATIONS OF FUEL VAPOR CAN GET HEADACHES, FEEL SLEEPY OR FAINT. IF A PERSON'S BREATH SLOWS OR STOPS, SEND A PERSON FOR MEDICAL ASSISTANCE. GET THE PERSON OUT OF THE TANK IMMEDIATELY. START ARTIFICIAL RESPIRATION AT ONCE IF A PERSON'S BREATH STOPS. CONTINUE THE ARTIFICIAL RESPIRATION. PERSONS WITH HEADACHES, OR IRRITATION OF THE EYES OR SKIN SHOULD GET OUT OF THE FUEL TANK AT ONCE. JET FUELS CONTAIN SMALL QUANTITIES OF CHEMICAL ANTIOXIDANTS, METAL DEACTIVATORS AND CORROSION INHIBITORS. THESE CHEMICALS ARE IRRITANTS. IF SPLASHED INTO THE EYES, FLUSH THE EYES WITH WATER FOR A MINIMUM OF 15 MINUTES. LIFT THE UPPER AND LOWER EYELIDS FREQUENTLY TO REMOVE CHEMICALS. GET MEDICAL ASSISTANCE IMMEDIATELY.

WARNING: MAKE SURE THE TEMPERATURE IN THE FUEL TANK DOES NOT GET TOO HOT. IF THE FUEL TANK TEMPERATURE GETS TOO HOT, A PERSON IN THE FUEL TANK CAN HAVE HEAT-RELATED DISORDERS. IF A PERSON BECOMES TOO HOT, GET THE PERSON OUT OF THE FUEL TANK. FIND OUT IF MEDICAL ASSISTANCE IS NECESSARY.

WARNING: COVERALLS THAT ARE COATED WITH SARANEX 23P WILL KEEP BODY HEAT IN. CLOSELY MONITOR A PERSON IN SARANEX 23P COVERALLS FOR SIGNS OF HEAT-RELATED DISORDERS. IF A PERSON BECOMES TOO HOT, GET THE PERSON OUT OF THE FUEL TANK. FIND OUT IF MEDICAL ASSISTANCE IS NECESSARY.

(18) The observer must keep in communication with person(s) in the tank and watch for changes in conditions or a signal of danger.

S 682-339

WARNING: USE ONLY COTTON WIPERS, (BMS15-5) TO ABORB FUEL. OTHER MATERIALS CAN CAUSE STATIC ELECTRICITY. STATIC ELECTRICITY CAN CAUSE AN EXPLOSION IN THE FUEL TANK.

WARNING: MAKE SURE THAT THERE IS A GOOD FLOW OF AIR WHEN YOU ARE IN THE FUEL TANK. DO NOT REMOVE THE RESPIRATOR WHILE YOU ARE IN THE FUEL TANK. DO NOT DO MAINTENANCE IN THE FUEL TANK UNTIL YOU REMOVE ALL FUEL. FUEL FUMES CAN KILL YOU.

(19) Do these steps to remove any fuel that remains in the fuel tank:
(a) Put cotton wipers (BMS15-5) on the bottom of the fuel tank to absorb any fuel that remains in the tank.
(b) Count the number of cotton wipers (BMS15-5) as they are put into the fuel tank.

BOEING PROPRIETARY - Copyright (C) - Unpublished Work - See title page for details.

(c) Remove the cotton wipers (BMS15-5) when they are soaked.
(d) Count the number of sponges and cotton wipers (BMS15-5) as they are removed from the fuel tank.
(e) Make sure the counts agree.
(f) Make sure you remove all cotton wipers (BMS15-5) from the fuel tank.

WARNING: OBEY THE APPROVED PROCEDURES FOR FUEL-SOAKED COTTON WIPERS. PUT FUEL-SOAKED COTTON WIPERS IN APPROVED BARRELS ONLY. COTTON WIPERS THAT YOU USE TO CLEAN THE FUEL TANK CAN CAUSE FIRES. FIRES CAN CAUSE INJURIES TO PERSONNEL AND DAMAGE TO EQUIPMENT.

(g) Follow approved procedures to dispose of or clean the fuel soaked cotton wipers (BMS15-5).

S 362-340
(20) Do the necessary repair or maintenance procedures.

S 092-341
(21) After you complete the maintenance, do this task: Fuel Tank Closure.

TASK 28-11-00-582-342
4. Fuel Tank Closure
A. General
(1) After you do the maintenance, do this task to close the fuel tank.
(2) Make sure you read and obey the precautions in this task: Purging and Fuel Tank Entry Precautions.
B. References
(1) AMM 24-31-01/401, Main Battery
(2) AMM 24-31-04/401, APU Battery
(3) AMM 27-51-00/201, Trailing Edge Flaps
(4) AMM 27-81-00/201, Leading Edge Slats
(5) AMM 28-11-01/401, Main Tank Access Door

BOEING PROPRIETARY - Copyright (C) - Unpublished Work - See title page for details.

(6) AMM 28-11-02/401, Auxiliary Tank Access Door
(7) AMM 28-11-03/401, Surge Tank Access Door
(8) AMM 32-00-15/201, Landing Gear Door Locks

C. Equipment
(1) Air Source, Regulated, Dry Filtered, 0-150 psig (commercially available)
(2) Air Hose - (commercially available)
(3) Vacuum - industrial type, pneumatically powered, with attachments for cleaning the fuel tank interior (ATI Industries, 2425 West Vineyard Ave., Escondido, CA 92029) or equivalent

D. Consumable Materials
(1) G00034 Cotton Wiper - Process Cleaning Absorbent Wiper (cheesecloth, gauze) BMS15-5

E. Access
(1) Location Zones

133	Wing Center Section (Left)
134	Wing Center Section (Right)
531	Center Auxiliary Tank (Left)
532	Main Tank - Inboard of Rib No. 10 (Left)
541	Main Tank - Outboard of Rib No. 10 (Left)
542	Surge Tank (Left)
631	Center Auxiliary Tank (Right)
632	Main Tank - Inboard of Rib No. 10 (Right)
641	Main Tank - Outboard of Rib No. 10 (Right)
642	Surge Tank (Right)

F. Clean the Fuel Tank

S 212-348

WARNING: REMOVE ALL MAINTENANCE ITEMS, AND UNWANTED MATERIAL FROM THE FUEL TANK BEFORE YOU CLOSE IT. EQUIPMENT, TOOLS, LOOSE HARDWARE, OR CONTAMINATION CAN CAUSE DAMAGE TO THE FUEL SYSTEM. METAL ITEMS ARE POSSIBLE IGNITION SOURCES. AN IGNITION SOURCE IN A FUEL TANK CAN CAUSE A FIRE OR AN EXPLOSION.

(1) Each time you go into a fuel tank you must examine the fuel tank very carefully before you close it.

S 092-351
(2) Remove all of the equipment used to perform the maintenance (for example; tools, solvents, containers, plugs, brushes, and other equipment).

NOTE: Keep a written record of all the tools, equipment, material, and persons when they go into and go out of the fuel tank. Before you close the fuel tank, make sure the record shows there are no unwanted items in the tank.

BOEING PROPRIETARY - Copyright (C) - Unpublished Work - See title page for details.

S 092-346

(3) Use a cotton wiper, (BMS 15-5) to clean any unwanted solvents, liquids or grease.

S 162-352

WARNING: GROUND ALL OF THE EQUIPMENT AND THE HOSES USED IN THE FUEL TANK OR ADJACENT TO THE OPEN FUEL TANK. IF YOU DO NOT GROUND ALL OF THE EQUIPMENT AND HOSES, AN EXPLOSION CAN OCCUR.

WARNING: ONLY USE SHOP AIR OR BOTTLED AIR AS THE SOURCE OF GAS TO POWER AIR DRIVEN EQUIPMENT. GASES OTHER THAN SHOP OR BOTTLED AIR CAN REMOVE OXYGEN FROM A CLOSED AREA. IF YOU GO INTO A CLOSED AREA WITHOUT ENOUGH OXYGEN, YOU CAN BECOME UNCONSCIOUS OR IT CAN KILL YOU.

(4) Only use shop air or bottled air as a gas source for air-driven tools. Do not use nitrogen, oxygen, carbon dioxide or any other non-air source of gas.

S 162-353

(5) Use an air-driven vacuum to remove unwanted particles and pieces of used sealant.

G. Inspect the Fuel Tank

S 092-332

(1) Examine all the repairs, sealant and finishes to make sure they are correct and complete.

S 212-356

WARNING: MAKE SURE YOU REMOVE ALL UNWANTED PARTICLES AND MATERIALS FROM THE FUEL TANK. UNWANTED MATERIALS CAN COLLECT IN THE FUEL TANK, WHICH CAN CAUSE BLOCKAGE OR INCORRECT SYSTEM OPERATION, OR CREATE A POTENTIAL IGNITION SOURCE.

(2) Make sure these components are free from unwanted material or objects:
   (a) Fuel and water drain holes and paths.

BOEING PROPRIETARY - Copyright (C) - Unpublished Work - See title page for details.

(b) Fuel scavenge system components.

S 212-357

(3) Check the areas of the tank that were accessed for any damage to in-tank components, bonding jumpers, wiring and structure.
(a) Repair any problem that you find.

S 092-335

(4) Do a final inspection of the fuel tank to make sure you removed all tools, unwanted materials and equipment.

NOTE: Make sure the necessary approved persons do an inspection of the tank before you close it.

S 092-336

(5) Do a check of the record to make sure no unwanted items remain in the tank.

H. Close the Fuel Tank

S 092-278

(1) If an air duct was used at the maintenance area, remove the air duct to the access door opening.

S 942-280

(2) Go out of the fuel tank.

S 972-281

(3) If you are the observer, do these steps:
(a) Make a report that states the time and that all persons are out of the tank.
(b) Remove the sign that states:
CAUTION - PERSONNEL INSIDE TANK - MOVE NO EQUIPMENT.

S 092-283

WARNING: DO NOT STOP OR START THE HEATER/AIR BLOWER OR VENTILATION BLOWER WHILE THE AIR DUCT IS IN THE FUEL TANK. THE FUEL VAPOR FROM THE FUEL TANK COULD CAUSE AN EXPLOSION AT THE HEATER/AIR OR VENTILATION BLOWER MOTOR. AN EXPLOSION CAN CAUSE SERIOUS INJURY OR DEATH TO PERSONS AND CAN CAUSE DAMAGE TO EQUIPMENT.

(4) If a heater or ventilation blower was used, remove the air duct from the fuel tank.

BOEING PROPRIETARY - Copyright (C) - Unpublished Work - See title page for details.

S 092-284
(5) Turn the air duct 180 degrees away from the open fuel tank.

S 092-128
(6) Stop the heater/air and ventilation blower if used.

S 092-129
(7) Stop the air compressor.

S 092-130
(8) Disconnect the air supply hose from the air mover or blower(s).

S 092-131
(9) VENTURI TYPE VENTILATION EQUIPMENT;
Do these steps to remove the air mover equipment:
(a) For the main tanks do these steps:
1) Remove the air mover from the overwing fill port (Fig. 203).
2) Remove the ground from the air mover.
3) Remove the air mover adapter assembly from the overwing fill port.
4) Install the cap on the overwing fill port.
5) Install the applicable main tank access doors (AMM 28-11-01/401).
(b) For the surge tanks, do these steps:
1) Remove the air mover from the adapter base (Fig. 203).
2) Remove the ground from the air mover.
3) Remove the tank adapter assembly from the opening of the surge tank access door.
4) Install the surge tank access doors (AMM 28-11-03/401).
(c) For the auxiliary fuel tanks, do these steps:
1) Remove the air mover from the adapter base (Fig. 203).
2) Remove the ground from the air mover.
3) Remove the tank adapter assembly from the opening of the auxiliary tank access door, 531BB or 631BB.
4) Install the auxiliary tank access doors (AMM 28-11-02/401).

BOEING PROPRIETARY - Copyright (C) - Unpublished Work - See title page for details.

S 092-285

(10) AIR BLOWER TYPE VENTILATION EQUIPMENT;
Do these steps to remove the air blower equipment:
(a) For the main tanks do these steps:
1) Remove the ground from the airplane to the ventilation blower.
2) Install the applicable main tank access doors (AMM 28-11-01/401).
(b) For the surge tank access doors, do these steps:
1) Remove the ground from the airplane to the ventilation blower.
2) Install the surge tank access doors (AMM 28-11-03/401).
(c) For the auxiliary tank, do these steps:
1) Remove the ground from the airplane to the ventilation blower.
2) Install the auxiliary tank access doors (AMM 28-11-02/401).

S 092-132

(11) Follow approved procedures to clean and return all respiratory equipment.

S 092-286

WARNING: USE THE PROCEDURE IN AMM 32-00-15/201 TO REMOVE THE DOOR LOCKS. DOORS OPEN AND CLOSE QUICKLY AND CAN CAUSE INJURY TO PERSONS OR DAMAGE TO EQUIPMENT.

(12) Remove the door locks from the landing gear doors and close the doors (AMM 32-00-15/201).

S 092-287

WARNING: DO THE ACTIVATION PROCEDURE FOR THE TRAILING EDGE FLAPS. ACCIDENTAL OPERATION OF THE TRAILING EDGE FLAPS COULD CAUSE INJURY TO PERSONS.

(13) Do the activation procedure for the trailing edge flaps (AMM 27-51-00/201).

S 092-288

WARNING: MAKE SURE NO PERSONS ARE IN THE SLAT AREA WHEN YOU DO THE ACTIVATION OF THE LEADING EDGE SLAT PROCEDURE. IF PERSONS ARE IN THE SLAT AREA, INJURY CAN OCCUR.

(14) Do the activation of the leading edge slat procedure (AMM 27-81-00/201).

BOEING PROPRIETARY - Copyright (C) - Unpublished Work - See title page for details.

S 862-289
(15) Close these circuit breakers on the overhead circuit breaker panel, P11, and remove DO-NOT-CLOSE tags:
(a) 11M15, FUEL PUMPS L CTR
(b) 11M16, FUEL PUMPS R FWD L AFT
(c) 11M24, FUEL PUMPS R CTR
(d) 11M25, FUEL PUMPS L FWD R AFT

S 862-290
(16) Close these circuit breakers on the overhead circuit breaker panel, P6, and remove DO-NOT-CLOSE tags:
(a) 6F15, L FUEL OVRD PUMP
(b) 6F21, R FUEL OVRD PUMP
(c) 6G15, L AFT FUEL BOOST PUMP
(d) 6G18, R FWD FUEL BOOST PUMP
(e) 6G21, R AFT FUEL BOOST PUMP
(f) 6G24, L FWD FUEL BOOST PUMP

S 412-291
(17) Connect these airplane batteries:
(a) MAIN (AMM 24-31-01/401)
(b) APU (AMM 24-31-04/401).

S 942-237
(18) Remove all precautionary signs and placards.

S 092-343
(19) Remove all support equipment, stands, ladders, ropes, etc.

BOEING PROPRIETARY - Copyright (C) - Unpublished Work - See title page for details.

FUEL TANKS - INSPECTION/CHECK

1. General
   A. This procedure has these tasks:
      (1) Analysis of Fuel Leak Type
      (2) Analysis of Fuel Leak Cause
      (3) Fuel Leak Detection Procedures
      (4) Helitest Leak Detection Procedure
      (5) Fuel Tank Closure
      (6) External Wires Over the Auxiliary Tank Inspection
   B. After you have identified the leaks, refer to these procedures to repair the fuel tanks:
      (1) To make sealant repairs in the fuel tank, refer to AMM 28-11-00/801.
      (2) For cleaning and painting of the fuel tank, refer to AMM 28-11-00/701.
   C. If there is indication of damage to the secondary fuel barrier, you must find and repair the leakage in the fuel tank and in the secondary fuel barrier (AMM 28-11-00/801) before the airplane can be released for flight.

      NOTE: The most usual indication of such damage is a report of fuel fumes in the passenger cabin.

   D. If you find fuel near one of the drain tubes for the slat track housing, it is possible that there is a leak in the drain tube. There is a procedure to do a temporary repair of fuel leakage in the drain tubes for the slat track housing in AMM 28-11-00/801.
   E. If the cause of the fuel leak is a result of structural damage, do the structural repair. Refer to the Structural Repair Manual before you apply the sealant.

TASK 28-11-00-306-098

2. Analysis of the Fuel Leak Type (Fig. 605)
   A. Access
      (1) Location Zones

133	Wing Center Section (Left)
134	Wing Center Section (Right)
531	Center Auxiliary Tank (Left)
532	Main Tank Inboard of Rib No. 10 (Left)
541	Main Tank - OUtboard of Rib No. 10 (Left)
542	Surge Tank (Left)
631	Center Auxiliary Tank (Right)
632	Main Tank - Inboard of Rib No. 10 (Right)
641	Main Tank - Outboard of Rib No. 10 (Right)
642	Surge Tank (Right)

BOEING PROPRIETARY - Copyright (C) - Unpublished Work - See title page for details.

B. Procedure

S 796-099
(1) Fuel leakage is divided into four groups to calculate flight safety.

NOTE: The dimension patterns of fuel leaks are based on an examination made 15 minutes after you rubbed the leak area to dry it.

S 226-100
(2) The four groups are stain, seep, heavy seep, and running leak and are defined as follows.
(a) A stain is a leak where the wetted area is not more than 1 1/2 inches wide after the time interval noted above.
(b) A seep is a leak where the wetted area is not more than 4 inches wide after the time interval noted above.
(c) A heavy seep is a leak where the wetted area is not larger than 6 inches wide after the time interval noted above.
(d) A running leak is all fuel leaks that are larger than 6 inches wide after the time interval noted above.

NOTE: Fuel will usually come into view again immediately after being wiped dry and can run or drip from the surface.

S 796-101
(3) Examine the wet area around the leak source to find the group of the fuel leak.

S 796-102
(4) After you examine the leak area, rub the area clean and examine the leak area again.

TASK 28-11-00-206-103
3. Analysis of Fuel Leak Cause (Figs. 601, 602, 603, 604, 604A)
A. General
(1) This task lists the causes of the fuel leaks and discusses leak path analysis.
(2) The cause of fuel tank leaks is usually incorrect fitting installations, damaged sealant, incorrectly installed or damaged O-rings, or loose fasteners.
(3) Before you defuel a fuel tank which has a leak, try to find all of the leaks in the fuel tank.
(4) Repair all leaks each time a fuel tank is defueled to repair leaks.
(5) The causes of most of the fuel leaks in the fuel tank structure are:
(a) Surfaces are prepared incorrectly
(b) Sealants are mixed or kept incorrectly
(c) Sealants are applied incorrectly
(d) Fasteners are loose
(e) Fittings and connections are installed incorrectly.

BOEING PROPRIETARY - Copyright (C) - Unpublished Work - See title page for details.

B. References
(1) AMM 28-11-00/801, Fuel Tanks
C. Access
(1) Location Zones
133 Wing Center Section (Left)
134 Wing Center Section (Right)
531 Center Auxiliary Tank (Left)
532 Main Tank Inboard of Rib No. 10 (Left)
541 Main Tank - OUtboard of Rib No. 10 (Left)
542 Surge Tank (Left)
631 Center Auxiliary Tank (Right)
632 Main Tank - Inboard of Rib No. 10 (Right)
641 Main Tank - Outboard of Rib No. 10 (Right)
642 Surge Tank (Right)

D. Procedure - Fuel Leak Causes

S 286-104
(1) Surfaces are prepared incorrectly.
(a) The surfaces must not contain unwanted materials such as grease, metal particles, hair, loose paint or wax.
(b) Unwanted materials can cause the sealant not to bond correctly.

S 286-105
(2) Sealants are mixed or kept incorrectly (AMM 28-11-00/801).
(a) Synthetic rubber makes the base for most sealing compounds.

NOTE: The manufacturer adds ingredients to control strength, cure time, plasticity, usable life, and fuel resistance.

(b) Sealants are supplied in two parts; base material and accelerator.

NOTE: You must be very careful to make sure the correct proportions of the base material and the accelerator recommended by the manufacturer are used. If you do not obey the manufacturer's instructions, you can change the physical properties of the mixture which can cause a seal failure and a fuel tank leak.

(c) Sealing compounds have a specified shelf life.

NOTE: After the specified time, you must do a test of the sealing compounds to find out if you can use them.

(d) You can keep some sealants in refrigeration for a short time after they are mixed with the accelerator.

NOTE: You must discard these sealants after the specified time.

BOEING PROPRIETARY - Copyright (C) - Unpublished Work - See title page for details.

S 286-106

(3) Sealants are applied incorrectly (AMM 28-11-00/801).

(a) If you do not do the subsequent steps, fuel leaks can occur:

1) Follow all manufacturer's instructions.
2) Use a brush to apply precoat when recommended.
3) Do all the steps to apply the sealant.
4) Make sure there are no air bubbles in the sealant.
5) Make sure you fill all the spaces completely with sealant.
6) Make sure you do not make an overlap with the sealants.
7) Make sure the sealant touches all the surfaces.

S 796-108

(4) The fasteners are loose.

(a) Loose fasteners start fuel leaks because they let attached surfaces move.

(b) Faying surface seals get cracks and let fuel leak through the seal plane (AMM 28-11-00/801).

(c) Loose rivets are not self-sealing.

(d) Sealant or metal seal covers do not bond with loose fasteners.

S 796-109

(5) Fittings and connections are installed incorrectly.

(a) Fittings and connections attached to or that go through the fuel tank structure are sealed with O-rings.

NOTE: Damaged or incorrectly installed O-rings can cause fuel leaks.

E. Leak Path Analysis

S 216-107

(1) After you find the external leak point and the internal leak source, find the point where fuel goes through the seal plane.

(a) The internal area where you see the bubble or dye usually shows the point where fuel goes through the seal plane.

(b) If there is an injection, prepack or hidden seal failure, the fuel can move along the tank structure and leak at a point far from the leak source.

(c) If you repair the internal area where you see the bubble or dye and do not repair the injection, prepack or hidden seal failure, you can only temporarily repair the leak.

(d) You must find all possible leak paths between the external leak point and internal leak source to repair the seal failure.

NOTE: You can raise the seal plane as an alternative to a repair of the seal (AMM 28-11-00/801).

BOEING PROPRIETARY - Copyright (C) - Unpublished Work - See title page for details.

S 216-110

(2) The seal plane stops the fuel leaks from the fuel tank.

(a) When there is a seal plane failure, the mating surfaces of the fuel tank structure, external to the seal plane, get wet.

NOTE: The area that gets wet extends in all directions from the point fuel goes through until it finds an injection, faying surface, prepack or hidden seal. The seal plane stops the release of fuel from the fuel tank.

(b) There are no seals on the external side of the seal plane and fuel that goes through the seal plane follows the path of least resistance.

1) For example, a row of fasteners in a groove are wet but only one fastener has a leak.

2) If the fastener with the leak is sealed, then the fastener with the next least resistance leaks.

(c) If you find the leak path you can see how fuel gets from the internal leak source to the external leak point.

(d) To understand the leak, examine the fuel tank structure and sealant.

TASK 28-11-00-796-111

4. Fuel Tank Leak Detection Procedures

A. General

(1) This task contains procedures used to find a leak as follows:

NOTE: The procedures recommended to find the leak and the leak paths are "Find the External Leaks with Talcum Powder" and the "Air Pressure and Bubble Solution (Backblowing)" procedures.

(a) Find the External Leaks with Talcum Powder

(b) Air Pressure and Bubble Solution (Backblowing) procedure

(c) Air Bubble Hollow Bolt procedure

NOTE: This procedure finds the leaks in areas with complex structure.

(d) Dye Injection with Hollow Bolt

NOTE: This procedure finds leaks in areas with complex structure.

(e) Dye Injection procedure

NOTE: This procedure puts dye into the leak from outside the fuel tank and looks for dye inside the fuel tank.

BOEING PROPRIETARY - Copyright (C) - Unpublished Work - See title page for details.

(f) Internal Pressure procedure

NOTE: This procedure pressurizes the fuel tank to help find leaks on the outside of the fuel tank with soap solution. After the leaks are found, the backblowing procedure can be used to find the internal leaks. This procedure can help find leaks after the other procedures have been tried and when there is no fuel in the fuel tanks.

(g) Fuel Tank Access Doors

NOTE: This procedure gives fuel quantities to find access doors that leak.

(h) Engine Dry Bay

NOTE: This procedure does a check for fuel leaks in the engine dry bay (between ribs 6 and 9 in the forward part of the fuel tank) and finds the leaks.

(2) Before you defuel a fuel tank which has a leak, try to find all of the leaks in the fuel tank. Repair all leaks each time a fuel tank is defueled to repair leaks.
(3) If you find fuel near one of the drain tubes for the slat track housing, it is possible that there is a leak in the drain tube. There is a procedure to do a temporary repair of fuel leakage in the drain tubes for the slat track housing in AMM 28-11-00/801.

B. Equipment
(1) ST8744 - vacuum cup, to find bad fasteners (optional)
(2) Brushes - to apply the talcum powder
(3) Markers - non-lead, Berol filmograph to mark in the tank, Berol hydromarker to mark out of the tank (or equivalent)
(4) Source - vacuum, 10 psi (optional)
(5) Flashlight - Explosion-proof
(6) Pads - unsterilized, gauze, must have less than 0.75 percent oil
(7) Gloves - neoprene or rubber (commercially available)
(8) Tracing Device - Integral Fuel Tank Leak F71329
(9) Adapter Assembly - Fuel Leak Tracing Hollow Bolt F70206-1
(10) Pressure Plug Equipment - B28005-41 (Recommended), B28005-2 (Optional)
(11) Water Manometer Assembly - F72951-1

BOEING PROPRIETARY - Copyright (C) - Unpublished Work - See title page for details.

(12) Pressure Gauge - 0-10 PSIG (commercially available)
(13) Console - Shop Air Supply, Wing Access Door Pressure Test - J28010-1 (optional)

NOTE: This may be used instead of other equipment to regulate tank pressure.

(14) Plugs, stoppers - commercially available
(15) Equipment - Pressurization Wing Dry Bay - J28007-1, or locally made test equipment (Fig. 609)
(16) Air pressure capable of 4 psig (commercially available).
(17) Air pressure capable of 90 to 100 psig (commercially available).

C. Consumable Materials
(1) G00835 - soap solution for leak detection (or equivalent)
(2) C00069 Dye, Automate Red BSF
(3) G00034 Cotton Wiper, Process Cleaning Absorbent Wiper (cheesecloth, gauze)-BMS15-5.
(4) G00091 - Leak Detection Compound (or equivalent)
(5) G00270 - Masking tape, general purpose, A-A-883 (or equivalent)
(6) G00252 - Plastic sheeting (polyethylene) (or equivalent)

D. References
(1) AMM 06-44-00/201, Wings (Major Zones 500 and 600) Access Doors and Panels
(2) AMM 27-51-00/201, Trailing Edge Flap System
(3) AMM 27-81-00/201, Leading Edge Slat System
(4) AMM 28-11-00/201, Fuel Tanks
(5) AMM 28-11-00/801, Fuel Tanks
(6) AMM 28-11-01/401, Main Tank Access Door
(7) AMM 28-11-02/401, Auxiliary Tank Access Door
(8) AMM 28-11-03/401, Surge Tank Access Doors
(9) AMM 28-11-06/401, Engine Dry Bay Access Door
(10) AMM 28-26-00/201, Defueling
(11) AMM 51-31-01/201, Seals and Sealing

E. Access
(1) Location Zones

133	Wing Center Section (Left)
134	Wing Center Section (Right)
531	Center Auxiliary Tank (Left)
532	Main Tank Inboard of Rib No. 10 (Left)
533	Inboard Dry Bay (Left)
541	Main Tank - OUtboard of Rib No. 10 (Left)
542	Surge Tank (Left)
631	Center Auxiliary Tank (Right)
632	Main Tank - Inboard of Rib No. 10 (Right)
633	Inboard Dry Bay (Right)
641	Main Tank - Outboard of Rib No. 10 (Right)
642	Surge Tank (Right)

(2) Access Panels
136KZ Auxiliary Tank Access Door (Center)

BOEING PROPRIETARY - Copyright (C) - Unpublished Work - See title page for details.

531BB	Auxiliary Tank Access Door (Left)
532BB	Main Tank Access Door (Left)
532DB	Main Tank Access Door (Left)
532EB	Main Tank Access Door (Left)
532FB	Main Tank Access Door (Left)
533AB	Dry Bay - Inboard (Left)
541AB	Main Tank Access Door (Left)
541BB	Main Tank Access Door (Left)
541CB	Main Tank Access Door (Left)
541DB	Main Tank Access Door (Left)
541EB	Main Tank Access Door (Left)
541FB	Main Tank Access Door (Left)
541GB	Main Tank Access Door (Left)
541HB	Main Tank Access Door (Left)
541JB	Main Tank Access Door (Left)
541KB	Main Tank Access Door (Left)
541LB	Main Tank Access Door (Left)
541MB	Main Tank Access Door (Left)
541NB	Main Tank Access Door (Left)
541PB	Main Tank Access Door (Left)
541QB	Main Tank Access Door (Left)
541SB	Main Tank Access Door (Left)
541TB	Main Tank Access Door (Left)
541UB	Main Tank Access Door (Left)
541VB	Main Tank Access Door (Left)
541WB	Main Tank Access Door (Left)
541XB	Main Tank Access Door (Left)

BOEING PROPRIETARY - Copyright (C) - Unpublished Work - See title page for details.

631BB Auxiliary Tank Access Door (Right)
632BB Main Tank Access Door (Right)
632DB Main Tank Access Door (Right)
632EB Main Tank Access Door (Right)
632FB Main Tank Access Door (Right)
633AB Dry Bay - Inboard (Right)
641AB Main Tank Access Door (Right)
641BB Main Tank Access Door (Right)
641CB Main Tank Access Door (Right)
641DB Main Tank Access Door (Right)
641EB Main Tank Access Door (Right)
641FB Main Tank Access Door (Right)
641GB Main Tank Access Door (Right)
641HB Main Tank Access Door (Right)
641JB Main Tank Access Door (Right)
641KB Main Tank Access Door (Right)
641LB Main Tank Access Door (Right)
641MB Main Tank Access Door (Right)
641NB Main Tank Access Door (Right)
641PB Main Tank Access Door (Right)
641QB Main Tank Access Door (Right)
641SB Main Tank Access Door (Right)
641TB Main Tank Access Door (Right)
641UB Main Tank Access Door (Right)
641VB Main Tank Access Door (Right)
641WB Main Tank Access Door (Right)
641XB Main Tank Access Door (Right)

F. Find External Leaks with Talcum Powder

S 286-002

(1) Find the exact location of the leak on the airplane skin (Fig. 601, 602).

NOTE: If the tank is defueled when you start this procedure, refuel the tank and continue this procedure. It is also possible to transfer fuel into the tank with the leak to get more data about the external leak location. If it is not possible to refuel the tank, refer to the procedure: "Internal Pressure and Bubble Procedure" in the task "Alternative Procedures for Fuel Tank Leak Detection".

(a) Find the area of the skin that is wet with the fuel.

WARNING: DO THE DEACTIVATION PROCEDURE FOR THE LEADING EDGE SLATS. IF YOU DO NOT DO THE DEACTIVATION PROCEDURE FOR THE LEADING EDGE SLATS, INJURY TO PERSONS OR DAMAGE TO EQUIPMENT CAN OCCUR.

(b) If the leak is near the front spar, extend the leading edge slats and do the deactivation procedure (AMM 27-81-00/201).

BOEING PROPRIETARY - Copyright (C) - Unpublished Work - See title page for details.

(c) If you are sure that the source of the leak is one of the drain tubes for the slat track housing, you can do this task: "Temporary Repair of Leakage in the Drain Tubes for the Slat Track Housing" (AMM 28-11-00/801).

WARNING: DO THE DEACTIVATION PROCEDURE FOR THE TRAILING EDGE FLAPS. IF YOU DO NOT DO THE DEACTIVATION PROCEDURE FOR THE TRAILING EDGE FLAPS, INJURY TO PERSONS OR DAMAGE TO EQUIPMENT CAN OCCUR.

(d) If the leak is near the rear spar, extend the trailing edge flaps to get access to the area with the leak and do the deactivation procedure (AMM 27-51-00/201).
(e) If the leak is near the engine dry bay, remove the dry bay access panel (AMM 28-11-06/401) to get access to the dry bay.
(f) If the leak is near the side-of-body rib, remove the necessary panels to get access to the external part of the fuel tank.
(g) If there is leakage from the upper surface of the wing center section, look for leakage in the fillet seals in the upper surface of the wing center section, and for leakage through the secondary fuel barrier on top of the wing center section.

S 156-112
(2) If you find the external leak in a location that has aerodynamic smoother, remove some aerodynamic smoother around the area of the leak (AMM 51-31-01/201).

NOTE: It is a good procedure if the hole in the smoother is approximately the same as the dimensions of the nozzle that you use for the backblowing procedure.

S 166-113
(3) Rub the area that has the leak with a cotton wiper (BMS15-5) to dry it.

S 366-115
(4) Use a camel hair brush or a squeeze bottle to apply talcum powder to the area of the skin that contains the leak.

S 216-116
(5) Monitor the talcum powder continuously to see where it changes color.

BOEING PROPRIETARY - Copyright (C) - Unpublished Work - See title page for details.

S 216-117
(6) Compare the dimensions of the leak with the dimensions shown in Fig. 605 to find the type of leak.

NOTE: Monitor the leak area with the talcum powder for fifteen minutes to make sure you have the correct leak type and the correct leak position.

(a) If the talcum powder starts to change color at the edge of the area where you applied it, apply more talcum powder at that edge.

S 936-114
(7) Make a mark on each leak and do the same procedure again until each external leak is found.

S 286-004
(8) Do not defuel the fuel tanks until you know the exact location of all leaks on the airplane skin.

G. Prepare to Find the Leaks

S 656-005
(1) Defuel the applicable fuel tank(s) (AMM 28-26-00/201).

S 016-006

WARNING: CAREFULLY DO ALL OF THE SAFETY PROCEDURES IN THE PURGING AND ENTRY PROCEDURE FOR THE FUEL TANK. INJURY TO PERSONS AND DAMAGE TO EQUIPMENT CAN OCCUR.

(2) Do this task: "Fuel Tank Purging and Entry" for the tank that has the leak (AMM 28-11-00/201).

S 016-118
(3) Remove the applicable main tank access doors (AMM 28-11-01/401) (Fig. 608).

S 016-119
(4) Remove the applicable auxiliary tank access doors (AMM 28-11-02/401).

S 016-120
(5) Remove the applicable surge tank access doors (AMM 28-11-03/401).

BOEING PROPRIETARY - Copyright (C) - Unpublished Work - See title page for details.

S 706-121

(6) Visual Procedure

(a) Examine the area you think contains a leak for seal defects such as cracked or loose fillets, pinholes, or loose fasteners.

NOTE: If it is necessary, use mirrors to examine seals which are difficult to see.

CAUTION: HOLD THE AIR HOSE 1/2 INCH MINIMUM FROM THE AIRPLANE STRUCTURE. IF YOU DO NOT HOLD THE AIR HOSE 1/2 INCH MINIMUM FROM THE AIRPLANE STRUCTURE, DAMAGE TO THE SEALS CAN OCCUR.

(b) Do a check of the fillet seals that you think have a bad bond.

(c) Rub the edges with a pencil eraser, or supply air at a maximum of 100 psig and at least 1/2 inch from seal.

(d) Look at the tank structure for cracks or distortion.

H. Air Pressure and Bubble Solution (Backblowing) Procedure

NOTE: This procedure gives good results for leak detection.

S 946-007

(1) Two persons are necessary to do this task:

(a) One person must be out of the tank at the external location of the leak.

(b) One person must go into the tank and find the internal location of the leak.

(c) The person that goes into the tank must have these items:

1) An explosion-proof flashlight

2) Non-corrosive soap solution (bubble bath)

3) Marking pen (Berol Filmograph or equivalent)

(d) If the external leak location is near the side-of-body rib, the leak can be in the center tank or the wing tank.

NOTE: It is a faster procedure to put a person in the center tank and in the wing tank at the same time to look for the internal leak.

S 946-008

(2) The two persons must agree on a procedure to communicate.

(a) The person that is out of the fuel tank can knock on the airplane skin to make it easier for the person in the fuel tank to find the correct location.

(b) The person in the fuel tank must tell the person out of the fuel tank when to blow air through the external leak.

BOEING PROPRIETARY - Copyright (C) - Unpublished Work - See title page for details.

(c) Agree on a system of knocks.

NOTE: For example, the person in the fuel tank can knock one time to start blowing air, two times if he finds a leak, and three times if the leak is not found.

S 286-010

(3) The person in the tank must apply the soap solution to a large area near the external location of the leak.

NOTE: The internal leak can easily be as far as three feet or more from the external location of the leak that you found before. Examine the internal surface of the tank for loose sealant or bad sealant or a bad fastener. This can help you make a decision about where to look for the internal leak. If the external leak location is a fastener, find the fastener on the internal surface of the tank. Examine this fastener before you try to find the leak in a different location.

(a) If the external leak location is a skin joint (Fig. 603), examine the fillet seal on the nearest splice stringer (Fig. 601, 602).

NOTE: Splice stringers are stringers that cover the joints of the airplane skin. There are three splice stringers in each of the wing tanks: Number 6, number 10, and number 15 (Fig. 601, 602). Faying surface seals ("isolation seals") are applied at intervals of 30 inches along the splice stringers. These seals are applied between the splice stringers and the airplane skin. Their purpose is to keep the length of a leak path along a splice stringer to a limit of approximately 30 inches. Leak paths and backblowing paths do not usually go through these isolation seals.

(b) If the external leak location is the front or the rear spar, examine the fillet seals on the internal surface of that spar.

BOEING PROPRIETARY - Copyright (C) - Unpublished Work - See title page for details.

(c) If the external leak location is rib 3, the main tank wall, look for internal leaks in the auxiliary tank (Zone 531 or 631) and the main tank (Zone 532 or 632) (Fig. 601).

NOTE: It is a good procedure to put one person on each side of rib 3. Thus, one person is in the auxiliary tank, and one person is in the main tank. These two persons must look for internal leaks in the fillet seals on each side of the rib. Examine the full length of all of the fillet seals. It is possible for the head pressure of the fuel in the tank to cause fuel to show at an external location that is higher than the internal leak location.

S 286-097

CAUTION: HOLD THE AIR HOSE 1/2 INCH MINIMUM FROM THE AIRPLANE STRUCTURE. IF YOU DO NOT HOLD THE AIR HOSE 1/2 INCH MINIMUM FROM THE AIRPLANE STRUCTURE, DAMAGE TO THE SEALS CAN OCCUR.

(4) The person out of the tank must use an air supply with a nozzle to blow air through the external leak location (Fig. 606).

NOTE: The external leak location can be a hole in the aerodynamic smoother, a bad fastener, or an open seam in one of the spars, the side-of-body rib, or the dry bay.

(a) If the leak is small, it can be necessary to use the maximum pressure (100 psi).
(b) If the leak is larger, it is easier to find the leak with less pressure (for example, 50 psi or less).

S 286-122

(5) Have the person(s) in the fuel tank look for bubbles.
(a) Look for bubbles that show the location of the leak.
(b) It is also possible to feel for blowing air to find the leak.
(c) Find all leak locations on the internal surface of the fuel tank.

NOTE: It is possible that three or four internal leaks are related to one external leak location. Make a signal to the person out of the tank to stop the backblowing procedure when you find all of the leaks.

BOEING PROPRIETARY - Copyright (C) - Unpublished Work - See title page for details.

(d) Make a mark on these leak locations with the marking pen.

NOTE: If you are not sure you found the correct leak path, you can apply the bubble solution to the external leak location and blow air through the internal leaks. If air blows through the external leak location, you found the correct leak path.

S 286-123

(6) After you do a check on the full area, do a check again on the areas where you saw bubbles to make sure you isolate the leaks.

S 166-124

(7) Clean the bubble solution in the fuel tank.

S 366-125

(8) Repair the leaks that you find (AMM 28-11-00/801).

(a) If you find a leak in a self-sealing fastener, refer to AMM 28-11-00/801 for procedures to do a temporary repair of self-sealing fasteners with leaks.

NOTE: Self-sealing fasteners are frequently used in the fuel tank. These fasteners have a plastic collar that prevents fuel flow. They are not covered with sealant. Do not put sealant on these fasteners unless you find one with a leak. The only permanent repair of a self-sealing fastener with a leak is to remove the used fastener and install a new one (Ref Structural Repair Manual).

I. Air Bubble with Hollow Bolt Method

S 026-126

(1) Remove a fastener.

BOEING PROPRIETARY - Copyright (C) - Unpublished Work - See title page for details.

S 486-127
(2) Install the hollow bolt.

S 796-128
(3) Apply the noncorrosive soap solution to the area in the fuel tank that you think contains the leak.

S 486-129
(4) Connect the integral fuel tank leak tracer, F71329, to the hollow bolt.

S 486-130

CAUTION: MAKE SURE THE FUEL TANK VENTS ARE OPEN AND NOT BLOCKED. IF THE FUEL TANK IS CLOSED (ACCESS DOORS INSTALLED AND VENTS BLOCKED), THE FUEL TANK PRESSURE CAN INCREASE AND CAUSE DAMAGE TO EQUIPMENT.

(5) Supply air pressure with an air source, to the tracer, F71329 and look for air bubbles in the fuel tank.

NOTE: Use a lower pressure (1-5 psi) to look for leaks.

S 936-131
(6) Make a mark at the locations where you see air bubbles in the fuel tank.

S 086-132
(7) Remove the hollow bolt.

S 426-133
(8) Install the fastener.

S 166-134
(9) Clean the bubble solution from in the fuel tank.

BOEING PROPRIETARY - Copyright (C) - Unpublished Work - See title page for details.

J. Dye Injection with Hollow Bolt Method

NOTE: Use this method only after you use the Air Bubble with Hollow Bolt Method.

You can use Red Automate dye in maximum concentrations of 2 fluid ounces per 100 gallons of fuel.

S 026-135
(1) Remove a fastener.

S 486-136
(2) Install the hollow bolt.

S 486-137
(3) Connect the integral fuel tank leak tracing device to the hollow bolt.

S 486-138
(4) Add dye through the hollow bolt.

S 086-139
(5) Remove the integral fuel tank leak tracing device.

S 086-140
(6) Remove the hollow bolt.

S 426-141
(7) Install the fastener.

S 936-142
(8) Make a mark at the location where you first see the dye.

S 166-143
(9) Use a cotton wiper (BMS15-5) and remove all the dye.

K. Dye Injection Method

NOTE: This method injects dyed fuel through the external leak point to find the internal leak source.

You can use Red Automate dye in maximum concentrations of 2 fluid ounces per 100 gallons of fuel.

S 486-144
(1) Put the integral fuel tank leak tracing device in position near the external leak.

BOEING PROPRIETARY - Copyright (C) - Unpublished Work - See title page for details.

S 796-145
(2) Use the integral fuel tank leak tracing device to add dye through the external leak.

S 796-146
(3) Continue dye pressure until dye shows in the fuel tank.

S 936-147
(4) Make a mark at the point where dye is first seen.

S 086-148
(5) Remove the integral fuel tank leak tracing device.

S 166-149
(6) Use a cotton wiper (BMS15-5) and remove all the dye.

L. Internal Pressure and Bubble Procedure

NOTE: Use this procedure only if it is not possible to use the talcum powder procedure to find the external leaks. For example, you can use this procedure if the airplane is defueled. But the recommended procedure to find external fuel leaks is the talcum powder procedure with fuel in the tanks.

S 486-150
(1) Install the pressure plug equipment as follows:

NOTE: A pressure gauge should be used with pressure plug equipment B28005-41.

(a) Install the vent cover assembly in the surge tank vent.
(b) Install the tank cover assembly in the door opening of the pressure relief valve in the surge tank (AMM 28-11-03/401).
(c) Install plugs in the fuel vent at each wing tip.

S 416-151
(2) Install all other fuel tank access doors removed (AMM 28-11-01/401, AMM 28-11-02/401, AMM 28-11-03/401).

S 486-152

WARNING: BLOW INTO THE MANOMETER HOSE AND MAKE SURE THE WATER LEVEL CHANGES TO MAKE SURE THE WATER MANOMETER ASSEMBLY OPERATES SAFELY. MAKE SURE THE OPEN END OF THE MANOMETER IS COMPLETELY FREE OF ALL OBSTRUCTIONS. IF THE MANOMETER IS NOT CLEAR, INJURY TO PERSONS OR DAMAGE TO EQUIPMENT COULD OCCUR.

(3) Connect the water manometer assembly to the adapter on the tank cover assembly.

BOEING PROPRIETARY - Copyright (C) - Unpublished Work - See title page for details.

S 486-154

WARNING: DO NOT GO INTO A FUEL TANK THAT IS PRESSURIZED. DO NOT USE MORE THAN THE MAXIMUM SAFE PRESSURE OF 5.20 PSIG. IF YOU GO INTO A PRESSURIZED FUEL TANK OR USE MORE THAN THE MAXIMUM SAFE PRESSURE, YOU COULD CAUSE INJURY TO PERSONS OR DAMAGE TO EQUIPMENT.

(4) Supply 4.0 psig air pressure to the fuel tank.

S 796-155

(5) Apply the bubble solution to the area out of the fuel tank that you think contains the leak.

S 796-156

(6) Watch the area you think contains the leak for bubbles.

NOTE: The size of the leak may be such that bubbles form very slowly. It is necessary to watch constantly to find the leak.

S 936-157

(7) Make a mark at the locations where you see bubbles.

S 166-158

(8) Use a moist cotton wiper (BMS15-5) to remove the bubble solution from the external surface of the fuel tank.

S 086-159

(9) Remove the pressure from the fuel tank.

S 086-160

(10) Remove the pressure plug equipment from the surge tank vent and the door opening of the pressure relief valve in the surge tank.

BOEING PROPRIETARY - Copyright (C) - Unpublished Work - See title page for details.

S 086-161
(11) Remove the plugs from the fuel vent at each wing tip.

S 086-162
(12) Disconnect the water manometer assembly from the adapter on the tank cover assembly.

S 796-163
(13) Use one of the procedures given to find the internal leak source (the "Air pressure and Bubble Solution Procedure" is recommended).

M. Find the Leaks at the Tank Access Doors (Fig. 608)

S 656-067
(1) Fill the applicable fuel tank to a level which will cover the tank access door that you think has a fuel leak (Table 601).

NOTE: Data calculated at an airplane attitude of zero degree pitch, zero degree roll.

BOEING PROPRIETARY - Copyright (C) - Unpublished Work - See title page for details.

Fuel Necessary to Cover the Tank Access Door Table 601	
TANK ACCESS DOOR	FUEL NECESSARY TO COVER THE TANK ACCESS DOOR IN POUNDS (KILOGRAMS)
136KZ	6800 LBS (3100 KGS)
531BB / 631BB	16300 LBS (7400 KGS)
532BB / 632BB	2200 LBS (1000 KGS)
532DB / 632DB	3700 LBS (1700 KGS)
532EB / 632EB	5500 LBS (2500 KGS)
532FB / 632FB	7600 LBS (3500 KGS)
541AB / 641AB	11500 LBS (5300 KGS)
541BB / 641BB	13800 LBS (6300 KGS)
541CB / 641CB	16200 LBS (7400 KGS)
541DB / 641DB	18700 LBS (8500 KGS)
541EB / 641EB	21000 LBS (9600 KGS)
541FB / 641FB	23300 LBS (10600 KGS)
541GB / 641GB	25200 LBS (11500 KGS)
541HB / 641HB	26900 LBS (12200 KGS)
541JB / 641JB	28600 LBS (13000 KGS)
541KB / 641KB	30200 LBS (13800 KGS)
541LB / 641LB	31700 LBS (14400 KGS)
541MB / 641MB	33100 LBS (15100 KGS)
541NB / 641NB	34800 LBS (15800 KGS)
541PB / 641PB	35500 LBS (16100 KGS)
541QB / 641QB	36600 LBS (16600 KGS)

BOEING PROPRIETARY - Copyright (C) - Unpublished Work - See title page for details.

Fuel Necessary to Cover the Tank Access Door Table 601	
TANK ACCESS DOOR	FUEL NECESSARY TO COVER THE TANK ACCESS DOOR IN POUNDS (KILOGRAMS)
541SB / 641SB	37600 LBS (17100 KGS)
541TB / 641TB	38400 LBS (17500 KGS)
541UB / 641UB	39200 LBS (17900 KGS)
541VB / 641VB	40000 LBS (18200 KGS)
541WB / 641WB	40600 LBS (18500 KGS)
541XB / 641XB	FILL TO MAXIMUM SHUTOFF LEVEL

S 796-210

(2) Examine the access door for leaks using the "Find External Leaks with Talcum Powder" procedure.

S 966-211

(3) Repair or replace the access door as applicable (AMM 28-11-01/401, AMM 28-11-02/401).

N. Find the Leaks in the Engine Dry Bay

NOTE: This procedure does a check for fuel leaks in the engine dry bay (between ribs 6 and 9 in the forward part of the fuel tank) and finds the leaks.

S 866-078

(1) Prepare to find the leaks.

BOEING PROPRIETARY - Copyright (C) - Unpublished Work - See title page for details.

WARNING: CAREFULLY DO ALL OF THE SAFETY PROCEDURES IN THE PURGING AND ENTRY PROCEDURE FOR THE FUEL TANK. INJURY TO PERSONS AND DAMAGE TO EQUIPMENT CAN OCCUR.

(a) Do this task: "Fuel Tank Purging and Entry" for the applicable engine dry bay (AMM 28-11-00/201).
(b) Remove the applicable engine dry bay access panel, 533AB or 633AB (AMM 28-11-06/401).
(c) Go into the applicable dry bay and do a visual check for indications of leakage.
(d) If you see indications of leakage, note the location to help with subsequent leak detection.
(e) Seal the penetration on the front spar immediately outboard of rib 6 with the plastic sheet and masking tape.

NOTE: This penetration is for the outboard track of slat number 5. It is not possible to pressurize the dry bay if you do not seal it off.

(f) If there is a penetration in Rib 9 for the drain tube for the slat track housing, seal that penetration with the plastic sheet and masking tape.
(g) Defuel the applicable left or right main tank (AMM 28-26-00/201).

WARNING: CAREFULLY DO ALL OF THE SAFETY PROCEDURES IN THE PURGING AND ENTRY PROCEDURE FOR THE FUEL TANK. INJURY TO PERSONS AND DAMAGE TO EQUIPMENT CAN OCCUR.

(h) Do this task: "Fuel Tank Purging and Entry" for the applicable right or left main tank (AMM 28-11-00/201).
(i) Remove the applicable fuel tank access doors (AMM 28-11-01/401).
(j) Install again the applicable dry bay access door, 533AB or 633AB (AMM 28-11-06/401).

BOEING PROPRIETARY - Copyright (C) - Unpublished Work - See title page for details.

S 486-079

CAUTION: DO NOT PUT THE VENT HOSE TOO FAR INTO THE VENT HOLE. DAMAGE TO THE FLAME ARRESTOR CAN OCCUR.

(2) Attach the pressure check equipment to one vent hole in the dry bay

NOTE: (Use Wing Dry Bay Pressurization Kit J28007-1, or a locally manufactured pressurization kit Fig. 609).

S 496-080

(3) Put a stopper in the other vent hole in the dry bay.

S 866-081

WARNING: DO NOT GO INTO A FUEL TANK THAT IS PRESSURIZED. IF YOU GO INTO A PRESSURIZED FUEL TANK, YOU COULD CAUSE INJURY TO PERSONS.

WARNING: DO NOT APPLY MORE THAT 2.0 PSIG TO THE DRY BAY. IF YOU APPLY MORE THAT 2.0 PSIG TO THE DRY BAY YOU COULD CAUSE DAMAGE TO (RUPTURE) THE DRY BAY BARRIER PANELS.

(4) Do these steps to supply pressure to the dry bay:
   (a) Carefully adjust the pressure regulator to increase the pressure slowly to the dry bay.
   (b) Monitor the pressure gage to make sure you do not exceed 2psig.
      1) If you exceed 2 psig, you can damage the dry bay barrier panels.

S 016-082

(5) Go into the applicable right or left main fuel tank.

S 286-083

(6) Apply leak detection compound to the panels between the dry bay and the main fuel tank.

S 286-084

(7) Look for bubbles in the area you think contains the leak.

NOTE: Bubbles come from some leaks very slowly because they are very small. It is necessary to look constantly to find the leak.

NOTE: If you found indications of leakage during the visual inspection, use that data to help you find the leak on the outer side of the dry bay.

BOEING PROPRIETARY - Copyright (C) - Unpublished Work - See title page for details.

S 936-085
(8) Make a mark in the fuel tank at the locations you see bubbles.

S 286-086
(9) After you do a check of the full area, do a check again on the areas where you saw bubbles to make sure you isolate the leaks.

S 166-087
(10) Use a moist cotton wiper (BMS15-5) to remove the bubble solution from the internal surface of the fuel tank.

S 866-088
(11) Remove the pressure from the dry bay.

S 086-089
(12) Remove the pressure check equipment from the vent hole in the dry bay.

S 086-090
(13) Remove the stopper in the other vent hole in the dry bay.

S 866-095

WARNING: CAREFULLY DO ALL OF THE SAFETY PROCEDURES IN THE PURGING AND ENTRY PROCEDURE FOR THE FUEL TANK. INJURY TO PERSONS AND DAMAGE TO EQUIPMENT CAN OCCUR.

(14) Do this task: "Fuel Tank Purging and Entry" for the applicable engine dry bay (AMM 28-11-00/201).

S 016-096
(15) Remove the applicable dry bay access panel, 533AB or 633AB (AMM 28-11-06/401).

S 096-094

CAUTION: MAKE SURE YOU REMOVE ALL MATERIAL USED TO SEAL DRY BAY PENETRATIONS. DAMAGE TO THE SLAT TRACKS CAN OCCUR.

(16) Remove the masking tape and the plastic sheet that you installed to seal the dry bay penetrations.
(a) Remove the masking tape and plastic sheet that you used to seal the penetration in the front spar immediately outboard of rib 6.

BOEING PROPRIETARY - Copyright (C) - Unpublished Work - See title page for details.

(b) If you installed masking tape and a plastic sheet to seal the penetration in rib 9, remove the masking tape and plastic sheet.

S 366-091

(17) Repair the leaks (AMM 28-11-00/801).

S 416-093

(18) Install the applicable dry bay access panel, 533AB or 633AB (AMM 28-11-06/401).

TASK 28-11-00-706-219

5. Helitest Leak Detection Procedure

A. Consumable Materials

(1) B01002 Solvent, General Cleaning of Solvent Resistant Organic Coatings - Series 82 (AMM 20-30-82/201)

(2) G50004 Tape, vacuum - SM5126 or SM5127

(3) G00252 Material, Plastic Sheeting (polyethylene) - L-P-512

(4) G02329 Tape, high-speed - 3M #434

B. References

(1) AMM 20-30-82/201, Airplane Structure Cleaning Solvents (Series 82)

(2) AMM 28-11-00/801, Fuel Tanks

(3) AMM 28-26-00/201, Fuel Tank Defueling

C. Equipment

(1) HeliTest Wing Kit -
AEROWING, INC.
2006 Gladstone Ave
Nashville, TN 37211-2010
Phone: 702-203-1633
Fax: 702-447-7040

(2) Scissors - razor knife

(3) Helium - compressed, industrial grade, standard cylinder

(4) Regulator - pressure, and gage for helium cylinder

(5) Ventilation equipment - positive and negative to control and evacuate helium

(6) Source - compressed air, to blow areas dry

D. Procedure

S 796-220

(1) Do these steps to find the external leaks and to make a map of them:

NOTE: You must make a precise map of the leaks for this procedure to find the leakage.

(a) Clean the external wing surface around the area where you think the leak is.

BOEING PROPRIETARY - Copyright (C) - Unpublished Work - See title page for details.

(b) Use solvent to remove the grease from the area.
(c) Dry the area.
(d) Apply a mapping agent to the area.
1) Use talcum powder or a similar powder for a mapping agent.
(e) For running leaks, do these steps:
1) Find the origin of the leak.
2) Stop the fuel flow with mastic or tape to make sure that there are no other paths for fuel flow.
(f) When the leak is found, remove the seal from the leak site and find the origin of the leak precisely within the seal.

S 656-221
(2) Defuel the tank that has the leak. To do this, do this task: Pressure Defueling (AMM 28-26-00/201) or do this task: Tank to Tank Transfer (AMM 28-26-00/201).

S 656-222
(3) For the tank with the leak, do this task: Purging and Fuel Tank Entry (AMM 28-11-00/201).

S 796-223
(4) Apply compressed air to the external leak point to force back the fuel faster and to dry the area.

S 796-224
(5) Completely clean and dry the external leak point with solvent, Series 82 (AMM 20-30-82/201) to supply the best adhesion of tape.

NOTE: This step is important for successful leak detection.

S 796-225
(6) Do one of these two steps:
(a) Build a custom compression chamber around the external leak point with a plastic film.
(b) If it is possible, install one of the pressure cups supplied in the HeliTest Wing Kit to contain the pressure of helium on the outer surface of the tank.

S 796-226
(7) Install tape, SM5126 or SM5127 around the leak area or the pressure cup.
(a) Work the tape to stick it to the surface.

S 796-227
(8) If you build a custom chamber, do these steps:
(a) Cut a piece of material, L-P-512 to the size of the chamber formed by the tape, SM5126 or SM5127.
(b) Set the plastic over the vacuum tape.

BOEING PROPRIETARY - Copyright (C) - Unpublished Work - See title page for details.

(c) Work the plastic to make sure it sticks well to the vacuum tape.
(d) Make sure the chamber is as small as possible.

NOTE: A small chamber can contain more helium pressure than a larger one.

(e) Trim the plastic with a razor knife to follow the outline of the vacuum tape.

S 796-228
(9) Do these steps to connect the helium supply to the custom chamber:
(a) Wrap the helium injection tube with vacuum tape to form a 2-inch (5 cm) diameter flange 1 to 2 inches (2.5 to 5 cm) from the end of the tube.
(b) Slice a small hole in the plastic chamber and put the helium tube in the hole.
(c) Work the vacuum tape flange on the injection tube so it sticks well and seals the plastic chamber.

S 796-229
(10) If you use a pressure cup, attach the helium injection tube to the cup with the fittings supplied with the kit.

S 796-230
(11) Apply tape, 3M #434 or equivalent, over the plastic chamber or pressure cup and work it well for the best adhesion.
(a) Use a sufficiently large quantity of tape, 3M #434 to reinforce the plastic helium chamber so it can handle more pressure.

S 796-231
(12) Set up the HeliTest Wing Kit and purge the lines with helium to remove air.

NOTE: Refer to the instructions supplied with the kit.

S 796-232
(13) Carefully and slowly apply about 0.2 psig helium pressure to the chamber.

NOTE: Start with low pressure and then slowly increase the pressure. Less helium is necessary for larger leaks than for smaller leaks. Too much helium will flood the fuel tank. Inspect the chamber or rubber cup to make sure there is no leakage. If it leaks too much, rebuild the chamber because the helium can interfere with the detector.

BOEING PROPRIETARY - Copyright (C) - Unpublished Work - See title page for details.

S 796-233

(14) Put negative ventilation around the helium chamber to draw away leaking helium to make sure it does not interfere with the detector by drifting into the tank.

NOTE: This step is important for successful leak detection. Use positive pressure if negative pressure is not available, but make sure the helium is removed from the area and does not go into the tank where the detector probe is used.

S 796-234

(15) Permit the helium to soak into the leak path for 10 to 15 minutes before you go into the tank.

NOTE: Time is necessary to push the remaining fuel out of the tank path and start the flow of helium from the external leak point to the internal leak point.

S 796-235

WARNING: KEEP THE DETECTOR AND THE PUMP AWAY FROM THE TANK. INJURY TO PERSONS AND DAMAGE TO EQUIPMENT CAN OCCUR.

(16) Keep the HeliTest detector and the auxiliary pump away from the open fuel tank at all times.

S 796-236

(17) Go into the tank with the HeliTest Visual Probe (intrinsically safe for Class I, Div I areas).

S 796-237

(18) Slowly interrogate the inside of the tank around the area where you expect to find the leak.

NOTE: Patience is important. With a systematic approach, slowly move away from the area where you expect to find the leak until you find the exact location of the leak.

S 796-238

CAUTION: DO NOT PUT THE PROBE INTO FUEL PUDDLES. IT CAN CAUSE DAMAGE TO THE INSTRUMENT.

(19) If there is a puddle of fuel in the area where you expect to find the leak, use compressed air to dry the area.
(a) Build cotton wiper (BMS15-5) dams to soak up additional running fuel.

BOEING PROPRIETARY - Copyright (C) - Unpublished Work - See title page for details.

(b) Completely dry hidden areas.
(c) If fuel is drawn into the HeliTest probe, immediately remove it to a safe area and permit it to operate until all the fuel is vaporized.
1) Disconnect the Visual Probe gas line and permit it to run dry also.
2) Replace the wet filter on the visual probe tip with a dry filter.
3) Do not shut the HeliTest off while it is contaminated with fuel because permanent damage can occur.

S 796-239
(20) If you do not find the leak, increase the helium pressure to 0.6 psig, and then 1.2 psig.
(a) Continue to increase the helium pressure in similar increments until the leak is found.

NOTE: The compression chamber can hold 2 to 5 psig maximum. The maximum pressure depends on the size of the chamber. A smaller chamber can hold a larger pressure.

S 396-240
(21) When you find the leak, repair it with the applicable repair procedure (AMM 28-11-00/801).

S 796-241
(22) After the leak repair, do another test of the leak with the HeliTest equipment before you remove the helium chamber from the outside of the tank.

NOTE: This procedure makes sure the leak was repaired correctly.

S 796-242
(23) Do these steps to put the area back to its usual condition:
(a) Remove the pressure chamber or pressure cup and the tape.
(b) Clean the area around the leak with solvent, Series 82 (AMM 20-30-82/201).

S 796-243
(24) Do this same procedure with the HeliTest equipment for other leaks.

BOEING PROPRIETARY - Copyright (C) - Unpublished Work - See title page for details.

TASK 28-11-00-206-212

6. Fuel Tank Closure

A. References

(1) AMM 12-11-01/301, Fuel - Servicing
(2) AMM 28-11-00/201, Fuel Tanks
(3) AMM 28-11-00/801, Fuel Tanks
(4) AMM 28-11-01/401, Main Tank Access Doors
(5) AMM 28-11-02/401, Auxiliary Tank Access Doors
(6) AMM 28-11-03/401, Surge Tanks Access Doors
(7) AMM 28-11-06/401, Engine Dry Bay Access Door
(8) AMM 51-31-01/201, Seals and Sealing

B. Access

(1) Location Zones

133	Wing Center Section (Left)
134	Wing Center Section (Right)
531	Center Auxiliary Tank (Left)
532	Main Tank Inboard of Rib No. 10 (Left)
533	Inboard Dry Bay (Left)
541	Main Tank - Outboard of Rib No. 10 (Left)
542	Surge Tank (Left)
631	Center Auxiliary Tank (Right)
632	Main Tank - Inboard of Rib No. 10 (Right)
633	Inboard Dry Bay (Right)
641	Main Tank - Outboard of Rib No. 10 (Right)
642	Surge Tank (Right)

(2) Access Panels

136KZ	Auxiliary Tank Access Door (Center)

BOEING PROPRIETARY - Copyright (C) - Unpublished Work - See title page for details.

531BB	Auxiliary Tank Access Door (Left)
532BB	Main Tank Access Door (Left)
532DB	Main Tank Access Door (Left)
532EB	Main Tank Access Door (Left)
532FB	Main Tank Access Door (Left)
533AB	Dry Bay - Inboard (Left)
541AB	Main Tank Access Door (Left)
541BB	Main Tank Access Door (Left)
541CB	Main Tank Access Door (Left)
541DB	Main Tank Access Door (Left)
541EB	Main Tank Access Door (Left)
541FB	Main Tank Access Door (Left)
541GB	Main Tank Access Door (Left)
541HB	Main Tank Access Door (Left)
541JB	Main Tank Access Door (Left)
541KB	Main Tank Access Door (Left)
541LB	Main Tank Access Door (Left)
541MB	Main Tank Access Door (Left)
541NB	Main Tank Access Door (Left)
541PB	Main Tank Access Door (Left)
541QB	Main Tank Access Door (Left)
541SB	Main Tank Access Door (Left)
541TB	Main Tank Access Door (Left)
541UB	Main Tank Access Door (Left)
541VB	Main Tank Access Door (Left)
541WB	Main Tank Access Door (Left)
541XB	Main Tank Access Door (Left)

BOEING PROPRIETARY - Copyright (C) - Unpublished Work - See title page for details.

631BB Auxiliary Tank Access Door (Right)
632BB Main Tank Access Door (Right)
632DB Main Tank Access Door (Right)
632EB Main Tank Access Door (Right)
632FB Main Tank Access Door (Right)
633AB Dry Bay - Inboard (Right)
641AB Main Tank Access Door (Right)
641BB Main Tank Access Door (Right)
641CB Main Tank Access Door (Right)
641DB Main Tank Access Door (Right)
641EB Main Tank Access Door (Right)
641FB Main Tank Access Door (Right)
641GB Main Tank Access Door (Right)
641HB Main Tank Access Door (Right)
641JB Main Tank Access Door (Right)
641KB Main Tank Access Door (Right)
641LB Main Tank Access Door (Right)
641MB Main Tank Access Door (Right)
641NB Main Tank Access Door (Right)
641PB Main Tank Access Door (Right)
641QB Main Tank Access Door (Right)
641SB Main Tank Access Door (Right)
641TB Main Tank Access Door (Right)
641UB Main Tank Access Door (Right)
641VB Main Tank Access Door (Right)
641WB Main Tank Access Door (Right)
641XB Main Tank Access Door (Right)

C. Close the Repaired Fuel Tank

NOTE: If leakage was found in the upper surface of the wing center section, you must also repair the secondary fuel barrier (AMM 28-11-00/801) before you release the airplane for flight.

S 946-213

WARNING: OBEY THE PURGING AND FUEL TANK ENTRY PROCEDURE. FAILURE TO OBEY THE PURGING AND FUEL TANK ENTRY PROCEDURE COULD CAUSE INJURY TO PERSONS OR DAMAGE TO EQUIPMENT.

(1) Do this task: Purging and Fuel Tank Entry (AMM 28-11-00/201).

BOEING PROPRIETARY - Copyright (C) - Unpublished Work - See title page for details.

S 416-214

(2) Do the steps that follow to close the repaired fuel tank:

(a) Remove all coverplates, plugs, and equipment used in leak isolation tests.

(b) Remove all tools, solvent containers, cotton wipers (BMS15-5), and brushes used for sealant repairs.

NOTE: Keep a written record of all tools, equipment, material, and persons as they go into and go out of the fuel tank. Make sure the list matches before you close the fuel tank.

WARNING: GROUND ALL EQUIPMENT AND HOSES USED IN OR NEAR THE OPEN FUEL TANK. IF YOU DO NOT GROUND ALL THE EQUIPMENT AND HOSES, AN EXPLOSIVE SITUATION COULD OCCUR.

(c) Clean the repaired fuel tank fully to remove unwanted particles and pieces of the used sealant.

(d) If the fuel tank is wet, rub the wet area clean with a cotton wiper (BMS15-5).

(e) Examine all the repair sealant and topcoat to make sure you applied it correctly.

(f) Replace all the rib braces or the structure removed for access.

CAUTION: MAKE SURE YOU REMOVE ALL UNWANTED PARTICLES AND MATERIALS FROM THE FUEL TANK. IF THE UNWANTED MATERIALS COLLECT IN THE FUEL TANK, THEY CAN CAUSE A BLOCKAGE OF THE PUMPS.

(g) Make sure there is no blockage in the fuel and water drain holes and paths.

(h) Do a final inspection of the fuel tank to make sure you removed all unwanted materials and equipment.

NOTE: Make sure the necessary approved persons do an inspection of the tank before you close it.

(i) Install all of the fuel tank access doors that you removed (AMM 28-11-01/401, AMM 28-11-02/401, AMM 28-11-03/401) (Fig. 608).

D. Leak Check Procedure

S 216-217

(1) Do not refuel the fuel tanks that were repaired and topcoat was applied to until the topcoat is cured.

NOTE: Under normal conditions it is necessary to wait 12 hours at a minimum of 65 degrees F to cure the topcoat.

BOEING PROPRIETARY - Copyright (C) - Unpublished Work - See title page for details.

S 656-218
(2) If the fuel tank is repaired and no topcoat is applied, you can refuel the fuel tank when all layers of the new sealant are tack-free.

NOTE: If BMS 5-45 Class A sealant is used as a precoat, the precoat layer must also be tack-free. This is true even if the fillet seal completely covers the precoat.

(a) Do not point the fuel flow against the new sealant.

S 656-026
(3) Refuel the fuel tanks (AMM 12-11-01/301).

S 166-027
(4) Examine the external leak area regularly for one hour.

NOTE: You can monitor the leak area for a longer time to make sure the leak repair is OK.

S 796-031
(5) If you repaired a fastener, you can use the vacuum cup, ST8744, to make sure it does not have a leak (Fig. 607).
(a) Attach a vacuum source (10 psi) to the vacuum cup.
(b) Put the vacuum cup on the fastener that you repaired.
(c) Apply the vacuum pressure (10 psi).
(d) If no bubbles or other leak indications occur, you repaired the fastener correctly.

S 166-028
(6) Make sure there are no fuel leaks.

S 396-029
(7) If you removed aerodynamic smoother to find the external leak, repair the hole (AMM 51-31-01/201).

S 416-030
(8) If you removed some skin panels to get access to the external leaks, install them again.

BOEING PROPRIETARY - Copyright (C) - Unpublished Work - See title page for details.

TASK 28-11-00-206-258

7. External Wires Over the Auxiliary Tank Inspection

A. General

(1) ALI - Refer to the task: Airworthiness Limitation Precautions (AMM 28-00-00/201), for important information on airworthiness limitation instructions (ALIs).

(2) Do this task to do the requirements of 28-AWL-01.

B. References

(1) AMM 24-22-00/201, Control (Supply Power)

(2) AMM 25-25-01/201, Passenger Seats

(3) AMM 25-24-04/401, Partitions

(4) AMM 25-27-01/401, Floor Covering

(5) AMM 25-27-09/401, Passenger Seat Raceways

(6) AMM 53-01-01/401, Floor Panel

(7) SWPM 20-10-11, Wiring Assembly and Installation

C. Access

(1) Location Zones

131 Area above Wing Center Section (Left)

132 Area above Wing Center Section (Right)

D. Prepare for the Inspection

S 016-261

(1) To get access to the top the center auxiliary tank from Station 785.9 to Station 955.1, do these steps:

(a) Remove the seats (AMM 25-25-01/201).

(b) If applicable, remove the partitions (AMM 25-24-04/401).

(c) Remove the floor covering (AMM 25-27-01/401).

(d) If applicable, remove the passenger seat raceways (AMM 25-27-09/401).

(e) Remove the floor panels (AMM 53-01-01/401).

E. External Wires Over the Auxiliary Tank Inspection

S 216-262

(1) Do a detailed inspection of the wire bundles routed on the main deck over the auxiliary fuel tank and under the floor beams between Station 785.9 and Station 955.1.

(a) Look for these items:

1) Damaged clamps,

2) Wire chafing,

3) Wire bundles that are in contact with the surface of the auxiliary fuel tank.

BOEING PROPRIETARY - Copyright (C) - Unpublished Work - See title page for details.

S 216-263
(2) If you found a problem, do these steps:
(a) Remove electrical power from the airplane (AMM 24-22-00/201).
(b) Do the applicable repair (SWPM 20-10-11).

F. Put the Airplane Back to Its Usual Condition

S 416-264
(1) Install the floor panels (AMM 53-01-01/401).

S 416-265
(2) If applicable, install the passenger seat raceways (AMM 25-27-09/401).

S 416-266
(3) Install the floor covering (AMM 25-27-01/401).

S 416-267
(4) If applicable, install the partitions (AMM 25-24-04/401).

S 416-268
(5) Install the seats (AMM 25-25-01/201).

S 866-270
(6) Supply electrical power if it is necessary (AMM 24-22-00/201).

BOEING PROPRIETARY - Copyright (C) - Unpublished Work - See title page for details.

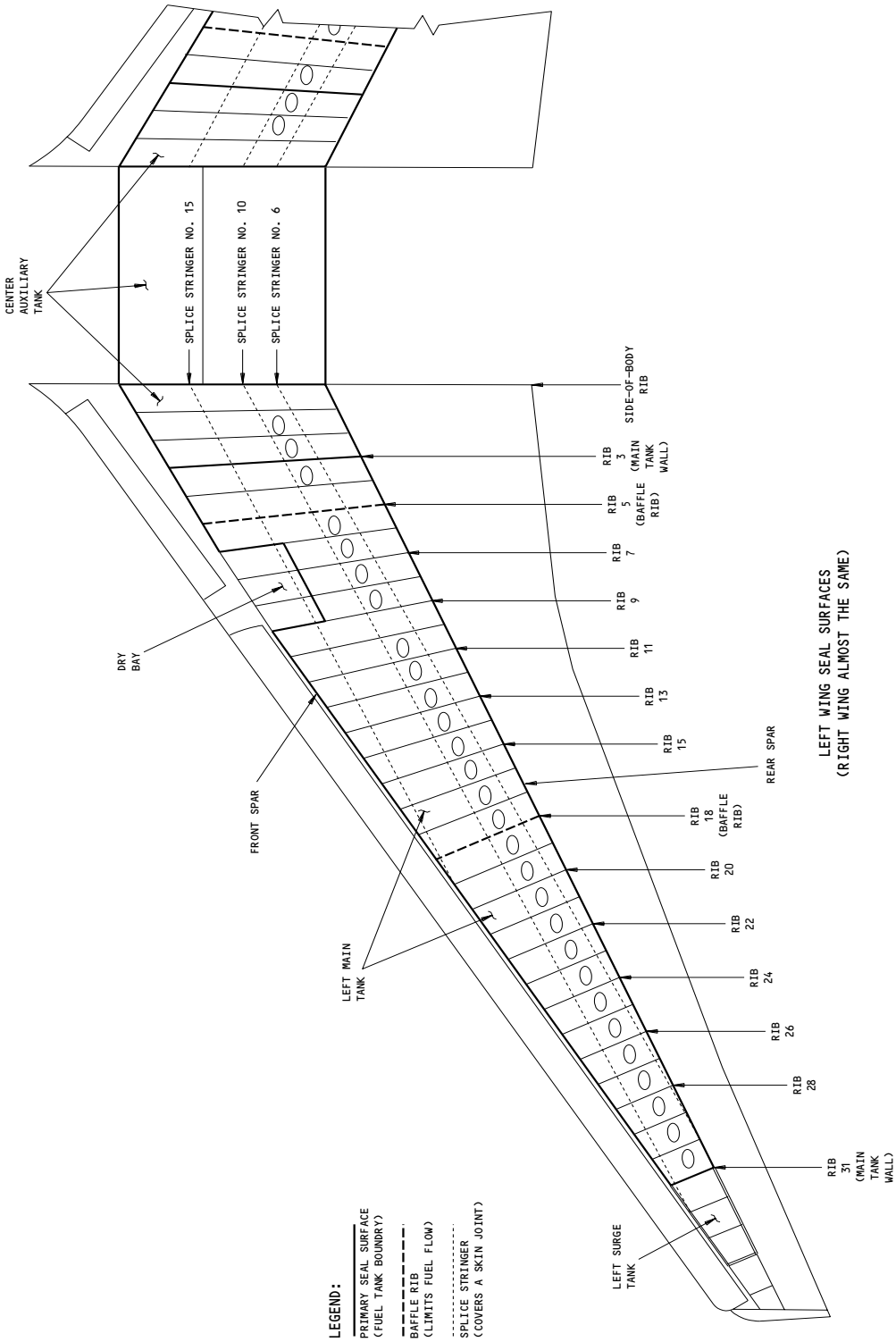

LEFT WING SEAL SURFACES
(RIGHT WING ALMOST THE SAME)

Seal Surfaces on the Wing and Center Wing Section
Figure 601

BOEING PROPRIETARY - Copyright (C) - Unpublished Work - See title page for details.

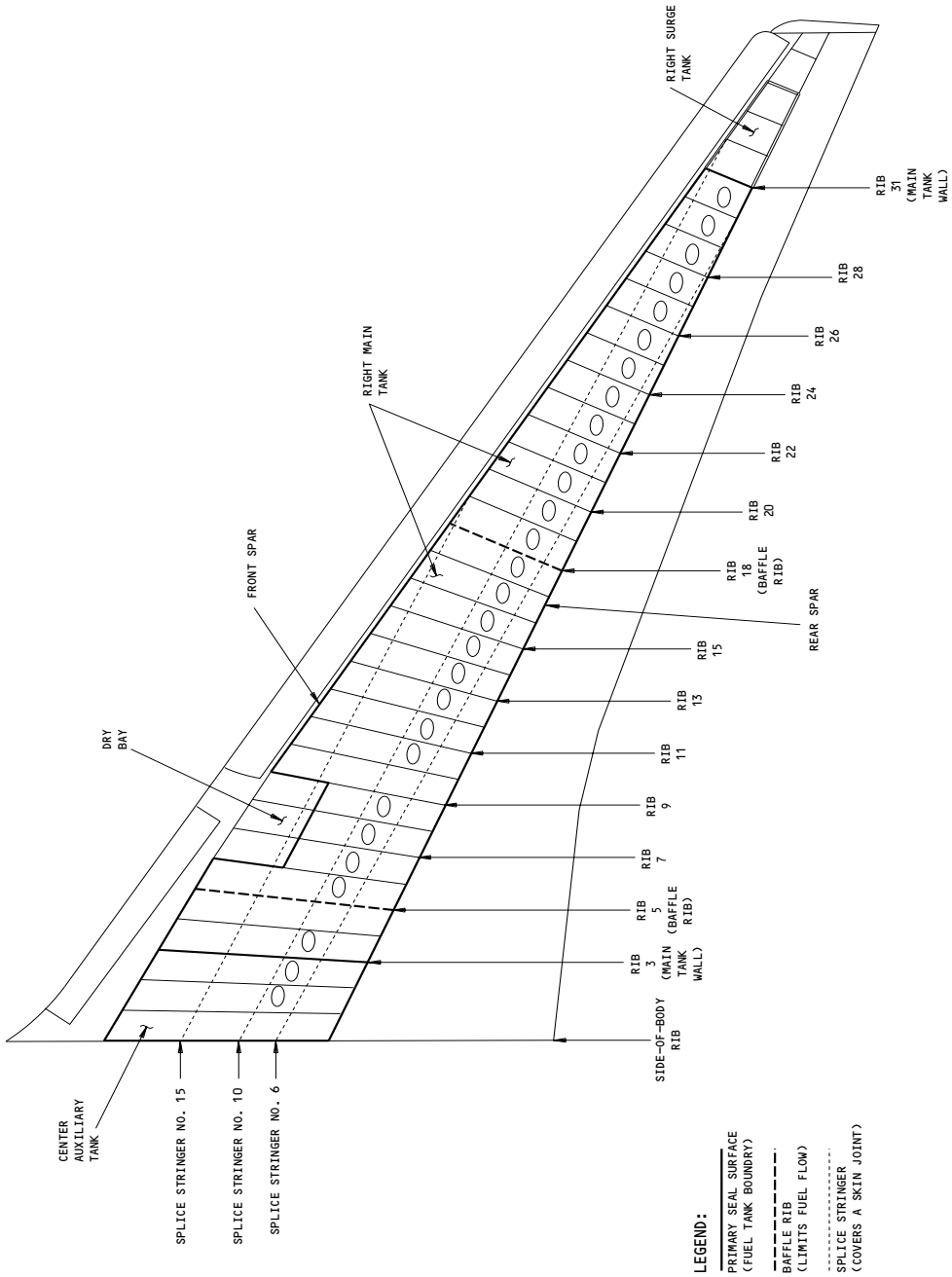

Seal Surfaces on the Right Wing
Figure 602

BOEING PROPRIETARY - Copyright (C) - Unpublished Work - See title page for details.

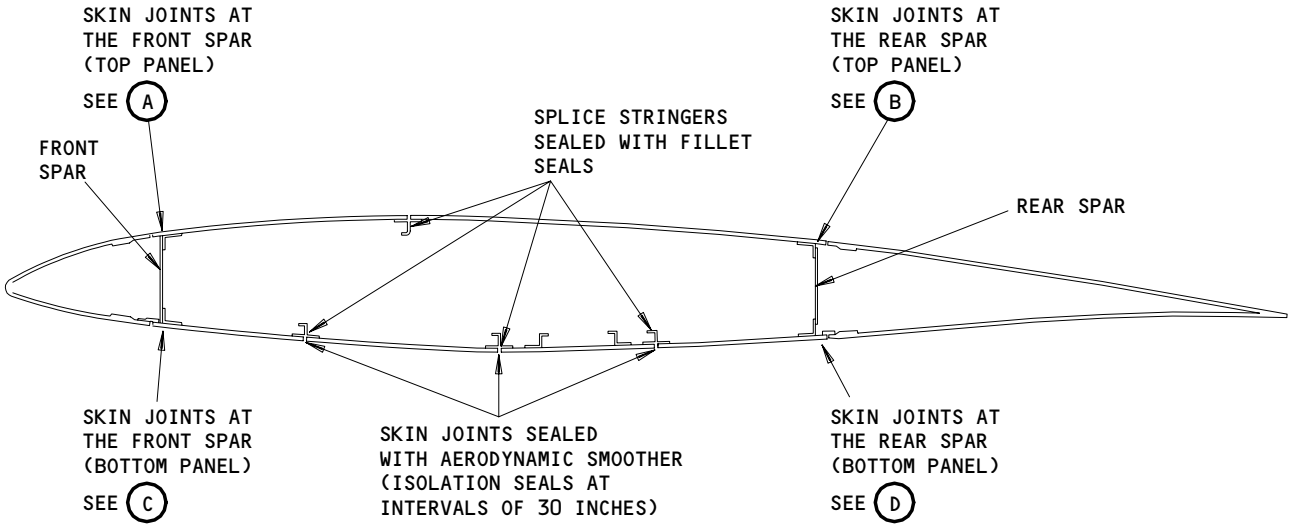

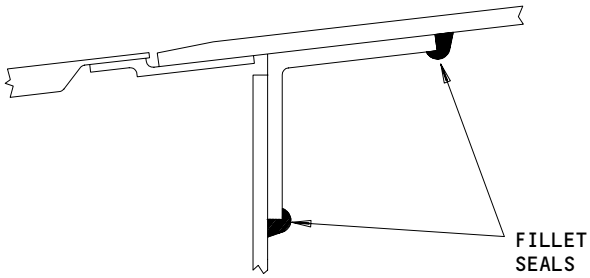

SKIN JOINTS AT THE FRONT SPAR
(TOP PANEL)

A

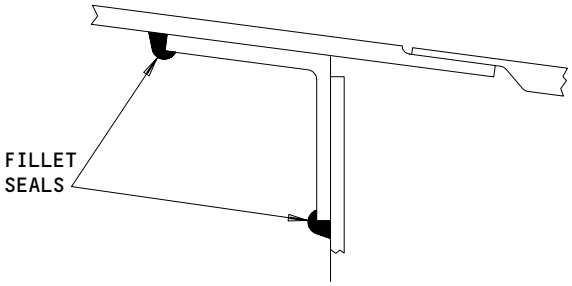

SKIN JOINTS AT THE REAR SPAR
(TOP PANEL)

B

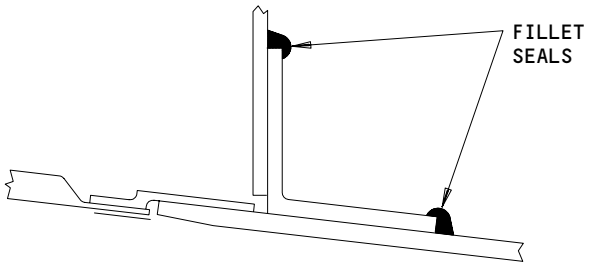

SKIN JOINTS AT THE FRONT SPAR
(BOTTOM PANEL)

C

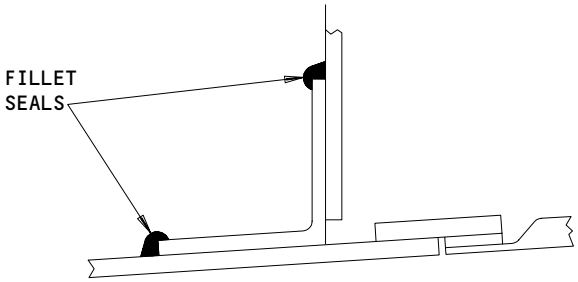

SKIN JOINTS AT THE REAR SPAR
(BOTTOM PANEL)

D

Skin Joints and Fillet Seals of the Wing
Figure 603

BOEING PROPRIETARY - Copyright (C) - Unpublished Work - See title page for details.

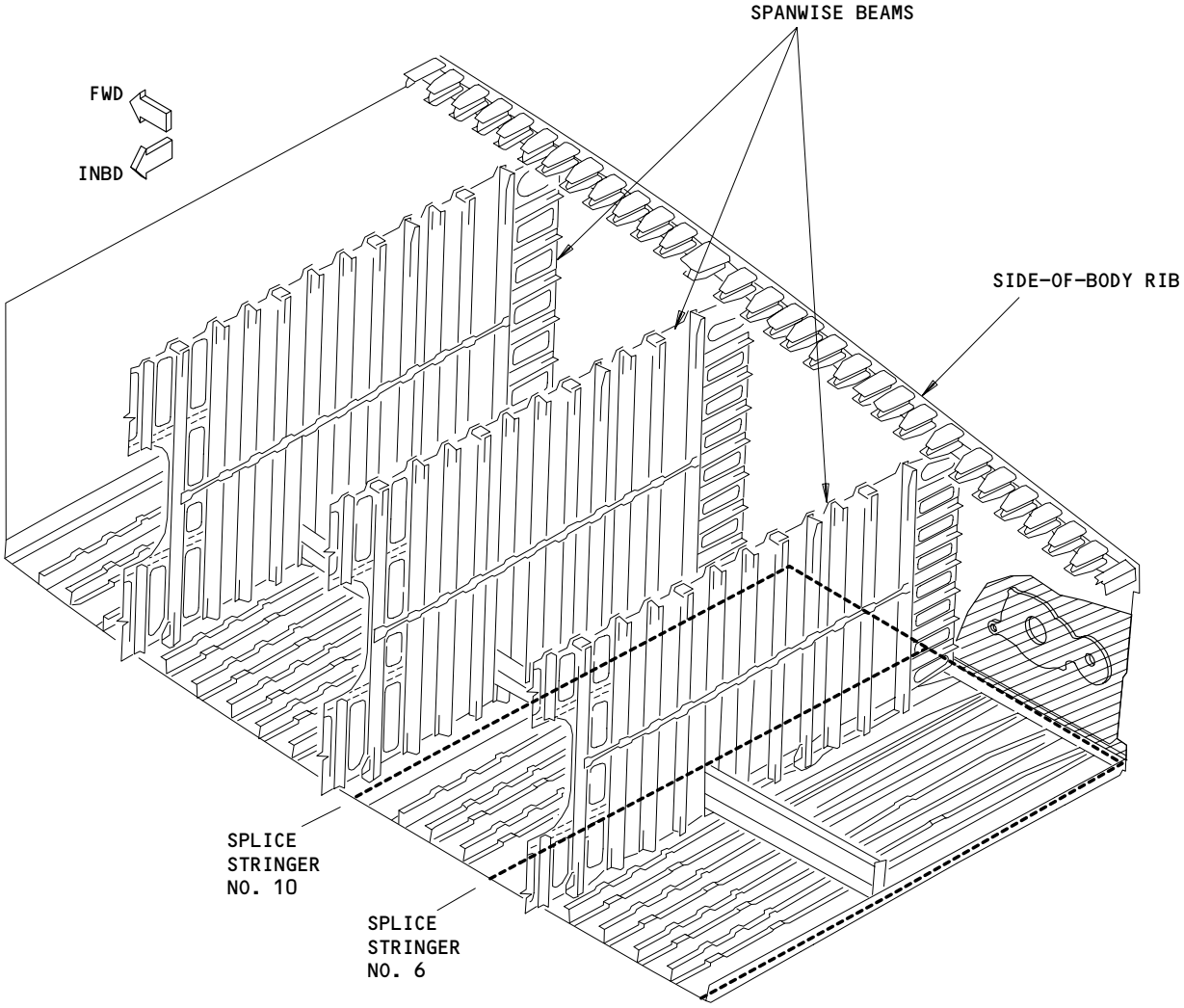

Structure of the Center Wing Section
Figure 604

BOEING PROPRIETARY - Copyright (C) - Unpublished Work - See title page for details.

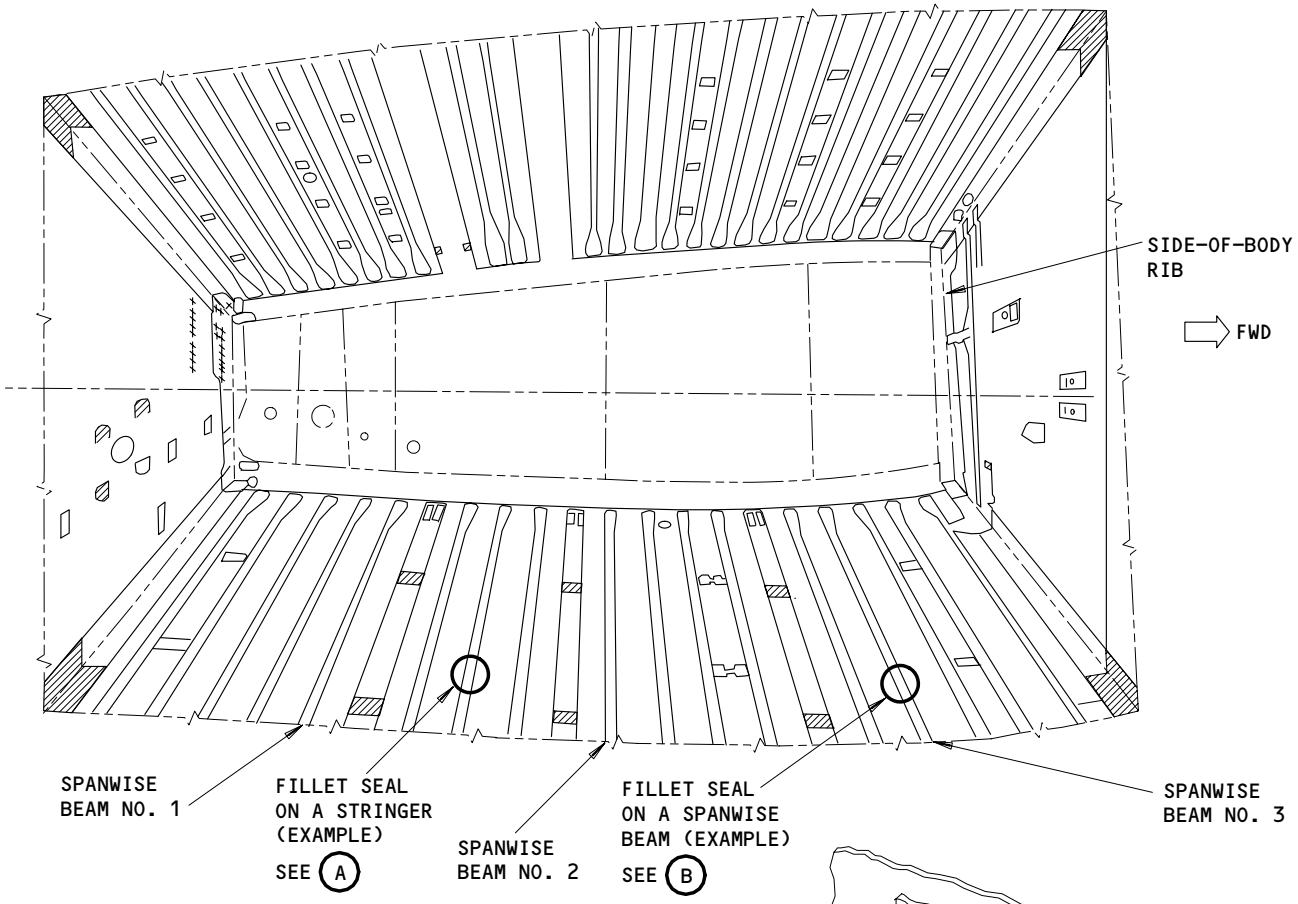

LEGEND:

FILLET SEAL

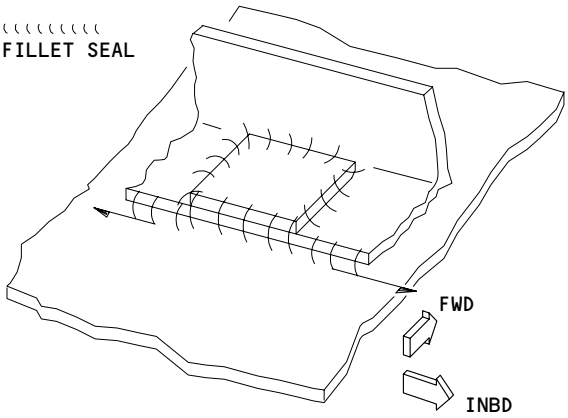

FILLET SEAL ON A STRINGER (EXAMPLE)

A

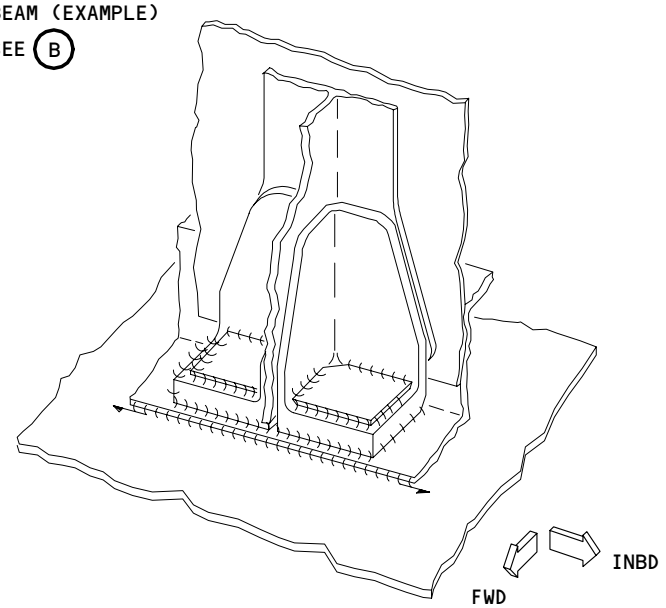

FILLET SEAL ON A SPANWISE BEAM (EXAMPLE)

B

Seal Surfaces on the Center Wing Section
Figure 604A

BOEING PROPRIETARY - Copyright (C) - Unpublished Work - See title page for details.

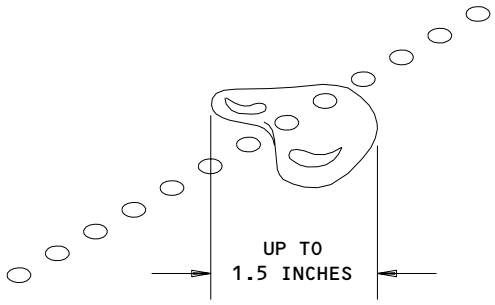

STAIN

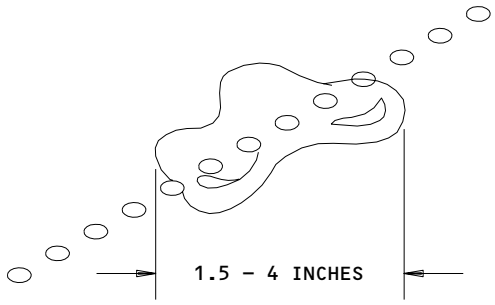

SEEP

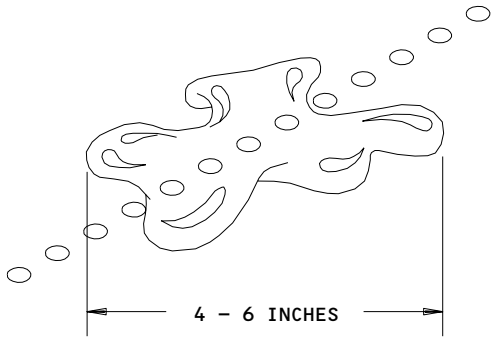

HEAVY SEEP

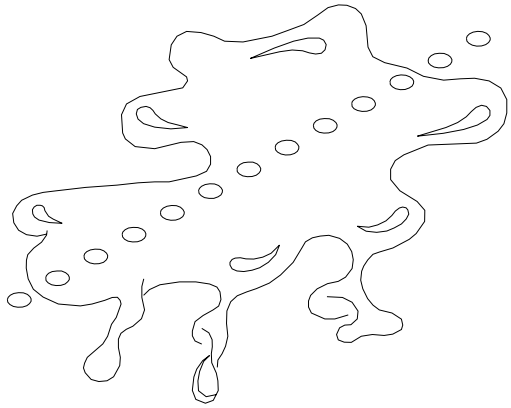

RUNNING LEAK

NOTE: THIS DOES NOT APPLY TO FUEL LEAKS FROM THE DRY BAY HOLES.

Fuel Leak Evaluation
Figure 605 (Sheet 1)

BOEING PROPRIETARY – Copyright (C) – Unpublished Work – See title page for details.

LEAKAGE LOCATION	STAIN	SEEP	HEAVY SEEP	RUNNING LEAK
Open areas with a good flow of air where fuel leakage cannot move to a possible fire source. Example: upper and lower wing surfaces that do not have the fairings.	1	1	2	3
Areas that are not fully closed and do not have a good flow of air. Example: rear spar at the trailing edge flaps, front spar at the leading edge flaps or slats, and the wheel wells.	1	2 Two locations maximum	3	3
Wing dry bay/drain holes.	5	4	4	4
The fueling station on the front spar.	1	2 Two locations maximum	3	3
Closed areas without a flow of air. Example: wing lower surface with fairings, air conditioning bay, wing/body fairings, and front and rear spars with fairings or panels.	2	3	3	3
Exterior empty space of the fuel boost pump. Remove the applicable access cover to find the leakage location.	1	2 One location maximum	3	3
Conduits for the main tank boost pumps and auxiliary tank override/jettison pumps, inside the pump housing and at the rear spar.	6	6	6	6
Pressurized area of the auxiliary fuel tank.	4	4	4	4

Fuel Leak Evaluation
Figure 605 (Sheet 2)

BOEING PROPRIETARY - Copyright (C) - Unpublished Work - See title page for details.

1 No repair procedure is necessary; examine the fuel leak frequently to make sure it does not get larger.

2 It is not necessary to repair the fuel leak immediately. Examine the fuel leak frequently to make sure it does not get larger. Do the necessary repairs during the next applicable scheduled maintenance.

3 Repair the fuel leak immediately to a minimum of 1 or 2 classification.

4 Repair the fuel leak immediately. No fuel leakage is permitted.

5 Do an inspection of the dry bay drain holes after each flight. If no fuel drops are seen 15 minutes after you wipe away the fuel, the airplane can be released for the subsequent flight. If fuel drops are seen 15 minutes after you wipe away the fuel, repair the leak immediately. (The leak is at least a seep).

6 Repair the fuel leak immediately. Fuel leakage is not permitted. Do an inspection of the pump wiring and conduit (AMM 28-22-15/601). Repair or replace the wiring and conduit per the requirements of AMM 28-22-15/601.

Fuel Leak Evaluation
Figure 605 (Sheet 3)

BOEING PROPRIETARY - Copyright (C) - Unpublished Work - See title page for details.

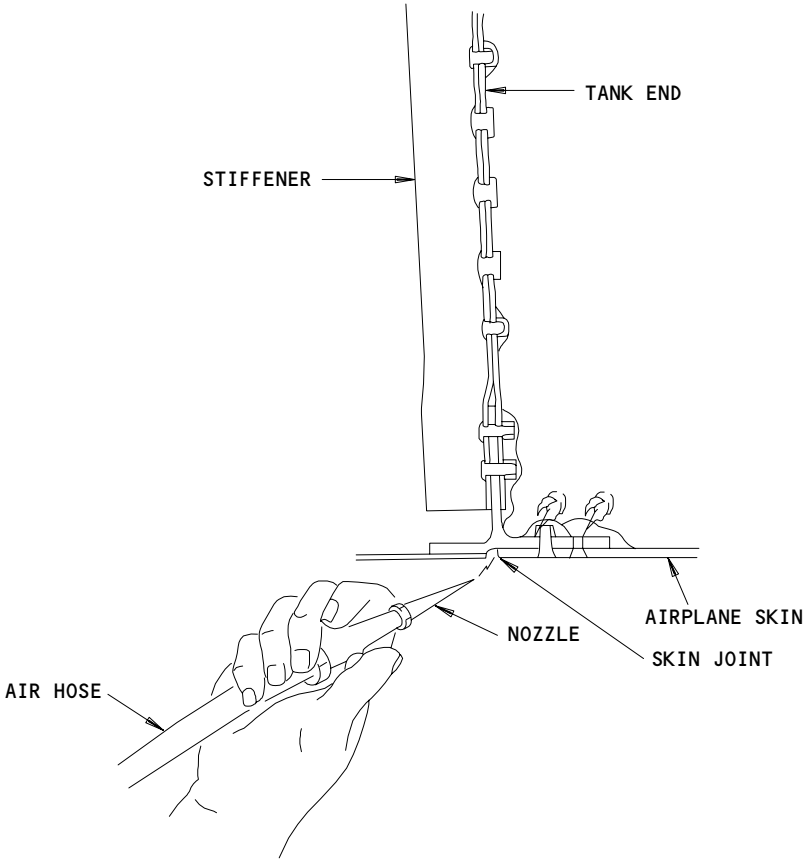

Backblowing Procedure (Example)
Figure 606

BOEING PROPRIETARY - Copyright (C) - Unpublished Work - See title page for details.

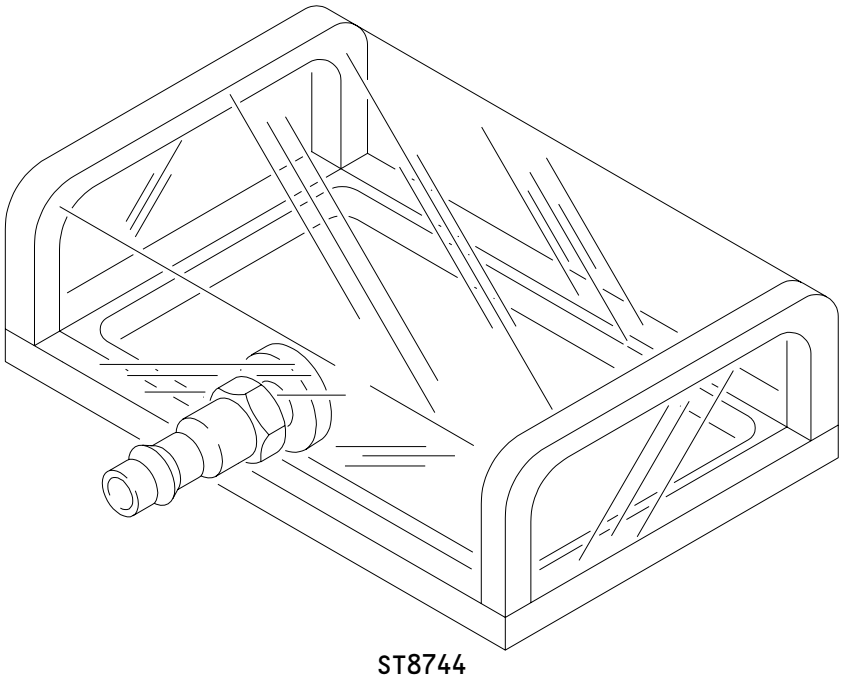

ST8744
(TO DO A CHECK FOR FASTENERS THAT HAVE A LEAK)

Vacuum Cup
Figure 607

BOEING PROPRIETARY - Copyright (C) - Unpublished Work - See title page for details.

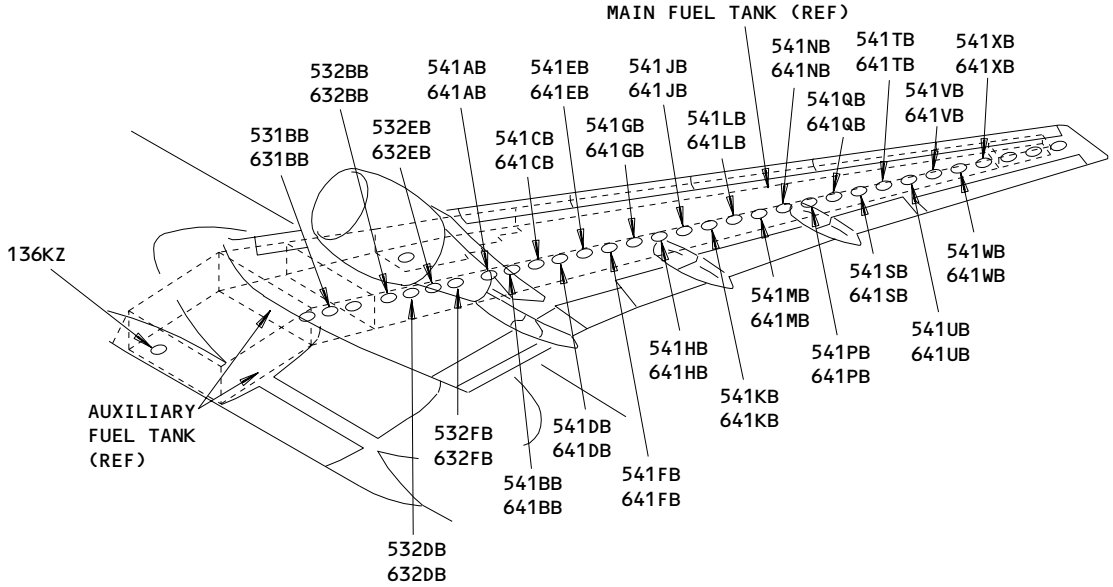

NOTE: 500 SERIES DOORS - LEFT WING
600 SERIES DOORS - RIGHT WING

Fuel Tank Access Doors
Figure 608

BOEING PROPRIETARY - Copyright (C) - Unpublished Work - See title page for details.

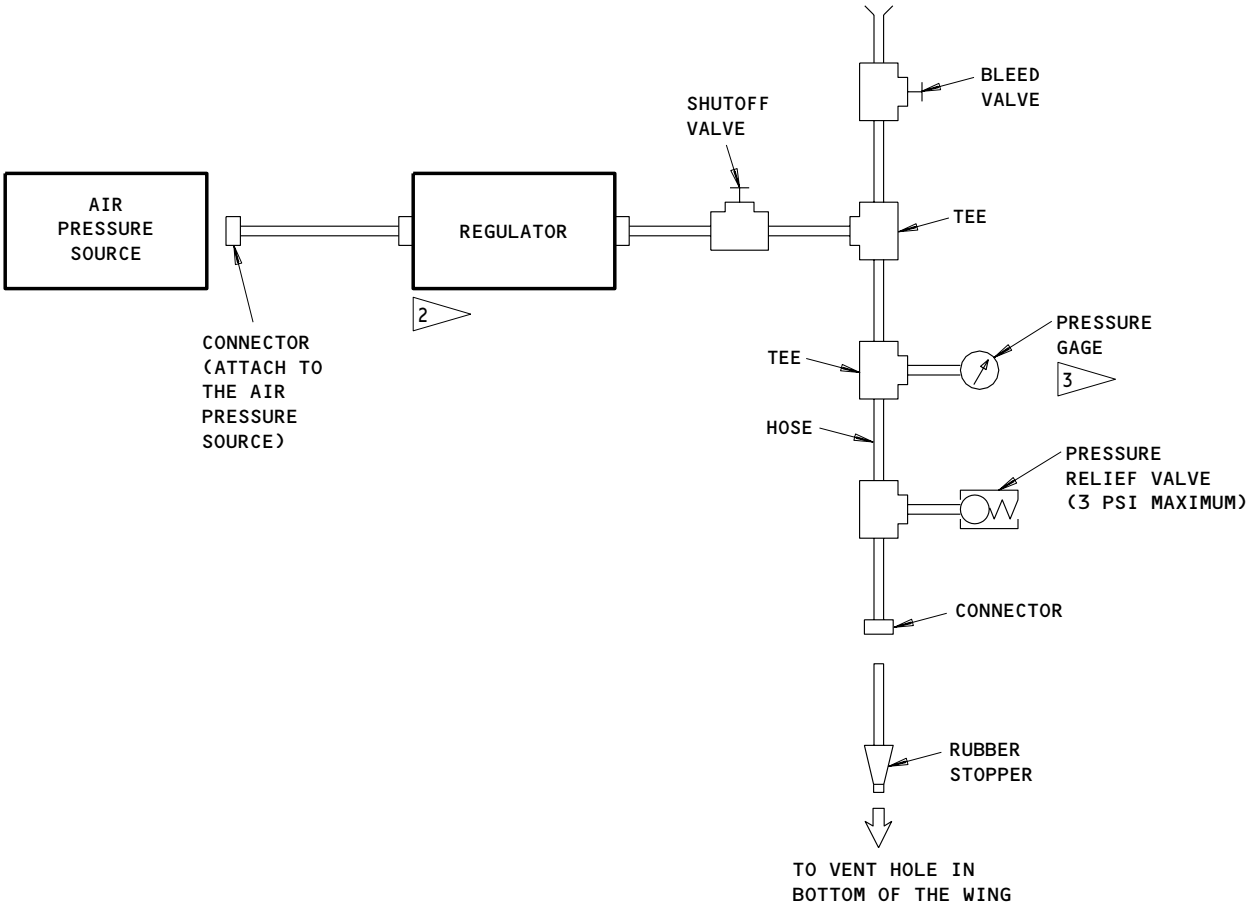

1 MANUFACTURED LOCALLY

2 REGULATOR WHICH CAN DECREASE AIR PRESSURE TO 2 PSIG.

3 CAUTION: MAKE SURE YOU DO NOT EXCEED THE 2 PSIG LIMIT. THE DRY BAY PANELS CAN BE DAMAGED.

Pressure Check Equipment
Figure 609

BOEING PROPRIETARY - Copyright (C) - Unpublished Work - See title page for details.

FUEL TANKS - CLEANING/PAINTING

1. General
   A. This procedure contains these tasks:
      (1) Apply the Corrosion Resistant Finish (Topcoat)

      NOTE: The procedure to apply the corrosion resistant finish on the fuel tank sealant material that was repaired, is contained in 28-11-00/801.

      (2) Clean the Fuel Tanks Contaminated with Red Dye.

TASK 28-11-00-307-024

2. Apply the Corrosion Resistant Finish (Topcoat)
   A. General
      (1) Corrosion resistant finish (topcoat) is applied to prevent corrosion to the internal structural and tubing surfaces, especially the bottom and lower sides, of the fuel tank. BMS 10-20 Type II and AMS-C-27725 are two kinds of corrosion resistant material which are approved for internal fuel tank use. An advantage of BMS 10-20 Type II finish material is that you can make additional BMS 5-45 sealant repairs, if necessary, after you apply the finish material if it is fully heat cured before sealant is applied. The AMS-C-27725 material can only be used as a topcoat after sealant installation is complete.
   B. Equipment

      WARNING: MAKE SURE THE CAPACITY OF THE EXHAUST FAN IS MORE THAN THE CAPACITY OF THE AIR BLOWER. THIS WILL MAKE SURE THERE IS A GOOD FLOW OF AIR. THE CORROSION RESISTANT FINISH IS A POISONOUS AND FLAMMABLE COMPOUND WHICH CAN CAUSE INJURY TO PERSONS OR DAMAGE TO EQUIPMENT.

      (1) Explosionproof air blower, with sufficient flexible hose to reach all areas in the fuel tanks. The capacity must be 90-100 cubic feet per minute (Rhine Air, Inc., 10744 Prospect Avenue, Suite A, Santee, CA 92071)

BOEING PROPRIETARY - Copyright (C) - Unpublished Work - See title page for details.

(2) Explosionproof centrifugal exhaust fan with 125-150 cubic feet per minute capacity and approximately 75 feet of 3-inch diameter flexible suction hose plus sufficient delivery hose to carry exhausted air outside hangar or work area (Rhine Air, Inc., 10744 Prospect Avenue, Suite A, Santee, CA 92071).
(3) Full face supplied air type respirator, U.S. Bureau of Mines approved
(4) Neoprene or rubber gloves (commercially available)
(5) Spray Equipment - DeVilbiss Model MBC or JGA, The DeVilbiss Co., 300 Phillips Ave., Toledo, Ohio (Recommended if you apply corrosion resistant finish to a large area)
(6) Vacuum cleaner - industrial type, pneumatically powered, with attachments for cleaning fuel tank interior (ATI Industries, 2425 West Vineyard Ave., Escondido, CA 92029)

C. Consumable Materials
(1) G00250 Tape, Pressure Sensitive - 1-inch width 3M No. 250, Minnesota Mining and Mfg. Co.
(2) E00017 - Scrapers (for removal of loose paint) - wood or plastic (commercially available)
(3) B00168 Abrasive paper - 600 grit or finer
(4) Cleaning Solvent

WARNING: DO NOT GET CLEANING SOLVENT IN YOUR MOUTH OR EYES OR ON YOUR SKIN. DO NOT BREATHE THE FUMES FROM THE CLEANING SOLVENT. PUT ON A PROTECTIVE SPLASH GOGGLE AND GLOVES WHEN YOU USE THE CLEANING SOLVENT. KEEP THE CLEANING SOLVENT AWAY FROM SPARKS, FLAME AND HEAT. THE CLEANING SOLVENT IS POISONOUS AND FLAMMABLE AND CAN CAUSE INJURY TO PERSONS OR DAMAGE TO EQUIPMENT.

(a) B00184 Cleaning Solvent, Pre-Sealing - BMS 11-7 (recommended)

BOEING PROPRIETARY - Copyright (C) - Unpublished Work - See title page for details.

(b) B00148 and B00153 Methyl Ethyl Ketone/Toluene, 50-50% Mix - TT-M-261/TT-T-548 (1st option)
(c) B00148 Methyl Ethyl Ketone (MEK) - TT-M-261 (2nd option)

(5) G00034 Cotton Wiper, Process Cleaning Absorbent Wiper (cheesecloth, gauze)-BMS15-5

(6) Corrosion resistant finish for integral fuel tanks
(a) C00307 BMS 10-20, Type II Class A (recommended)

NOTE: BMS 10-20, Type II Class A is mutually compatible with recommended fuel tank sealant BMS 5-45.

CAUTION: USE AMS-C-27725 FINISH MATERIAL AS A TOPCOAT ONLY. AMS-C-27725 FINISH MATERIAL IS NOT COMPATIBLE WITH SEALANT BMS 5-45.

(b) C00321 AMS-C-27725

D. References
(1) AMM 20-41-00/201, Static Grounding
(2) AMM 28-11-00/201, Fuel Tanks
(3) AMM 28-11-00/801, Fuel Tanks
(4) AMM 28-11-01/401, Main Tank Access Door
(5) AMM 28-11-02/401, Center Auxiliary Tank Access Door
(6) AMM 28-11-03/401, Surge Tank Access Door
(7) AMM 28-26-00/201, Defueling
(8) SRM 51-20-01, Protective Treatment of Metallic and Graphite Materials

E. Access
(1) Location Zones

133	Wing Center Section (Left)
134	Wing Center Section (Right)
531	Center Auxiliary Tank (Left)
532	Main Tank - Inboard of Rib No. 10 (Left)
541	Main Tank - Outboard of Rib No. 10 (Left)
542	Surge Tank (Left)
631	Center Auxiliary Tank (Right)
632	Main Tank - Inboard of Rib No. 10 (Right)
641	Main Tank - Outboard of Rib No. 10 (Right)
642	Surge Tank (Right)

BOEING PROPRIETARY - Copyright (C) - Unpublished Work - See title page for details.

F. Prepare to Apply the Corrosion Resistant Finish (Topcoat)

S 657-051
(1) Defuel the applicable fuel tank (AMM 28-26-00/201).

S 657-052
(2) Drain and purge the fuel tank (AMM 28-11-00/201).

S 497-053

WARNING: MAKE SURE THERE IS AN ELECTRICAL GROUND FOR ALL VENTILATION EQUIPMENT IN OR NEAR AN OPEN FUEL TANK. SPARKS IN OR NEAR AN OPEN FUEL TANK COULD CAUSE A FIRE OR EXPLOSION.

(3) Set up the air blower and flexible hose to have a good flow of air in the fuel tank.

S 497-025
(4) Connect the hoses and nozzles to an electrical ground (AMM 20-41-00/201).

S 167-026
(5) Use the exhaust fan and hoses to move exhaust air from the fuel tank to an open space away from the work area or hangar.

S 217-027
(6) Examine the internal fuel tank and tubing surfaces for fungus (mildew) and corrosion.

NOTE: A slimy, black layer on the inner surfaces of the fuel tank, soon after defueling, shows fungus contamination. As it drys, the layer becomes solid and turns light brown in color.

(a) If there is fungus or corrosion, clean the fuel tank (AMM 28-10-00/201).

BOEING PROPRIETARY - Copyright (C) - Unpublished Work - See title page for details.

S 147-028

(7) Remove all loose finish with wood or plastic scrapers and sand with aluminum oxide abrasive paper or abrasive disks.

(a) Do a check for loose finish on the surfaces adjacent to those with loose finish and other areas you are not sure about.

1) Apply a strip of pressure sensitive tape to the applicable surface.

2) Push on the pressure sensitive tape with constant and hard pressure.

3) Pull the pressure sensitive tape off the surface with a quick movement, vertical to the surface.

4) Examine the surface and the pressure sensitive tape for signs of loose finish.

a) If there are signs of loose finish, remove the loose finish.

S 127-029

(8) Use wet abrasive paper to make all finish areas and adjacent areas that you will apply a layer to, rough.

S 167-030

(9) Use a cotton wiper (BMS15-5) soaked in cleaning solvent and rub all unwanted materials from the applicable surfaces.

S 167-031

(10) Use a clean cotton wiper (BMS15-5) to make the surfaces dry.

S 167-032

(11) Clean the area with a vacuum cleaner to remove the flakes off the used finish and other unwanted material.

S 377-033

(12) If alodine metal surface treatment is worn or damaged, apply alodine metal surface treatment before you apply the finish.

BOEING PROPRIETARY - Copyright (C) - Unpublished Work - See title page for details.

CAUTION: USE ONLY ALODINE 600 TO REPAIR ALUMINUM WING SURFACES. PRIMER ADHESION PROBLEMS CAN OCCUR IF OTHER ALODINE SOLUTIONS ARE USED.

(a) Apply an alodine layer to the surface with Alodine 600 (SRM 51-20-01).

S 397-034

(13) Apply sealant if it is necessary because of removal of corrosion resistant finish (AMM 28-11-00/801).

S 217-035

WARNING: DO NOT GET SOLVENTS IN YOUR MOUTH, OR YOUR EYES, OR ON YOUR SKIN. DO NOT BREATHE THE FUMES FROM MEK. SOLVENTS ARE HAZARDOUS MATERIALS. SOLVENTS MAY BE FLAMMABLE OR HARMFUL TO THE ENVIRONMENT. REFER TO PRODUCT MATERIAL SAFETY DATA SHEETS (MSDS) AND LOCAL REQUIREMENTS FOR PROPER HANDLING PROCEDURES.

(14) Make sure all equipment used to apply to the corrosion resistant finish is clean.
(a) If you are not sure, clean the equipment in solvent, Series 81 (AMM 20-30-81/201) before you apply the corrosion resistant finish.

S 217-036

(15) Make sure that all surfaces of the fuel tank that you apply corrosion resistant finish to are clean.
(a) If you are not sure, clean the surfaces of the fuel tank with BMS 11-7 solvent before you apply the corrosion resistant finish.

S 217-037

(16) Make sure the storage life of the corrosion resistant compounds that are not mixed is not expired.
(a) The storage life of BMS 10-20, Type II Class A is 12 months at 75 ±15°F (23.9 ±8.4°C) from the date of manufacture.

BOEING PROPRIETARY - Copyright (C) - Unpublished Work - See title page for details.

(b) For AMS-C-27725, see manufactures product description for storage life.
1) Make sure there is sufficient corrosion resistant material to apply the corrosion resistant finish.

S 957-038
(17) Mask all nonstructural equipment areas in the fuel tank which are near the surfaces that you apply the corrosion resistant finish (topcoat) to.

NOTE: Do not apply the corrosion resistant finish (topcoat) to electrical bonding surfaces, clamps, O-rings, valves, measuring sticks, tank units, compensators, wiring, boost pumps, filler caps, or other nonstructural equipment.

S 227-039
(18) Make sure you keep the corrosion resistant finish at 50° to 100°F (10.0° to 37.8°C) with less than 85 percent relative humidity while you apply it (brush or spray gun).

G. Apply the Corrosion Resistant Finish (Topcoat)

S 627-107
(1) Do not use the corrosion resistant finish until a minimum of 1 hour after you mix it.

NOTE: The maximum usable life of the corrosion resistant finish is 8 hours at 75° ●5°F (23.9° ●2.8°C).

BOEING PROPRIETARY - Copyright (C) - Unpublished Work - See title page for details.

S 377-060

WARNING: MAKE SURE YOU HAVE A GOOD FLOW OF AIR IN THE AREA THAT YOU APPLY THE CORROSION RESISTANT FINISH (TOPCOAT). DO NOT GET THE CORROSION RESISTANT FINISH IN YOUR MOUTH OR EYES, OR ON YOUR SKIN. PUT ON A PROTECTIVE SPLASH GOGGLE AND GLOVES WHEN YOU USE THE CORROSION RESISTANT FINISH. KEEP AWAY FROM SPARKS, FLAME AND HEAT. THE CORROSION RESISTANT FINISH IS A POISONOUS AND FLAMMABLE COMPOUND WHICH CAN CAUSE INJURY TO PERSONS OR DAMAGE TO EQUIPMENT.

(2) To apply the corrosion resistant finish, use the brush procedure or spray gun procedure as follows:

(a) For the brush procedure (applicable for small areas), do the steps that follow:

NOTE: The sealant must be tack-free (AMM 28-11-00/801).

1) Apply a thin layer of corrosion resistant finish (approximately 0.0005 inch) with a soft bristle paint brush.

NOTE: Move the brush in one direction as much as possible.

a) To prevent air bubbles, spaces and removal of finish already applied, do not move the brush quickly or too many times when you apply the corrosion resistant finish.

2) Let the corrosion resistant finish dry for a minimum of 30 minutes.

3) Apply a second thin layer like the first layer.

4) Make sure the corrosion resistant finish you applied makes an overlap with all adjacent topcoat applied before.

(b) For the spray gun procedure (recommended for large areas), do the steps that follow:

1) Set the spray gun to 40 psi (276 kPa) air pressure and 5 to 10 psi (34 to 69 kPa) fluid pressure.

2) Apply the corrosion resistant finish with a spray gun on the surface.

3) Let the corrosion resistant finish dry for a minimum of 30 minutes.

4) Apply the second layer like the first layer.

5) Make sure the corrosion resistant finish you applied before makes an overlap with all adjacent topcoat applied before.

S 117-043

(3) Clean the equipment and tools after you apply the corrosion resistant finish (topcoat).

BOEING PROPRIETARY - Copyright (C) - Unpublished Work - See title page for details.

WARNING: DO NOT GET SOLVENTS IN YOUR MOUTH, OR YOUR EYES, OR ON YOUR SKIN. DO NOT BREATHE THE FUMES FROM SOLVENTS. SOLVENTS ARE HAZARDOUS MATERIALS. SOLVENTS MAY BE FLAMMABLE OR HARMFUL TO THE ENVIRONMENT. REFER TO PRODUCT MATERIAL SAFETY DATA SHEETS (MSDS) AND LOCAL REQUIREMENTS FOR PROPER HANDLING PROCEDURES.

(a) Clean the equipment with solvent, Series 81 (AMM 20-30-81/201) immediately after use.
(b) Soak the brushes in solvent, Series 81 (AMM 20-30-81/201) immediately after use.

NOTE: Discard the brushes when the bristles become rigid.

S 377-044
(4) Cure the corrosion resistant finish.

NOTE: See manufactures product description for dry (cure) times.

(a) Do the fuel (JP-4) or solvent (MEK) resistance check that follows to make sure the cure is complete.

WARNING: DO NOT GET METHYL ETHYL KETONE (MEK) IN YOUR MOUTH OR EYES, OR ON YOUR SKIN. DO NOT BREATHE THE FUMES FROM MEK. PUT ON A PROTECTIVE SPLASH GOGGLE AND GLOVES WHEN YOU USE MEK. KEEP MEK AWAY FROM SPARKS, FLAME, AND HEAT. MEK IS A POISONOUS AND FLAMMABLE SOLVENT WHICH CAN CAUSE INJURY TO PERSONS OR DAMAGE TO EQUIPMENT.

1) Soak a 4-inch square pad of cotton wiper (BMS15-5) with MEK or JP-4 as applicable.
2) Apply the pad to the surface you check and let the solvent or fuel soak the area.
   a) Use hard pressure and rub the area 100 strokes.

   NOTE: Count each movement in one direction as a stroke.

3) Look and see if the corrosion resistant finish is removed.

   NOTE: If you can see metal, the corrosion resistant finish is removed.

   a) If no bare metal is seen, the cure is satisfactory.

H. Return Airplane to Its Usual Configuration

BOEING PROPRIETARY - Copyright (C) - Unpublished Work - See title page for details.

S 957-045

CAUTION: REMOVE ALL MASKING TAPE AFTER YOU APPLY THE CORROSION RESISTANT FINISH. FAILURE TO REMOVE ALL THE MASKING TAPE COULD BLOCK THE SUCTION INLETS OF THE FUEL BOOST PUMPS.

(1) Make sure all masking tape is removed from the fuel tank and fuel tank equipment.

S 417-046

(2) Install all substructure, support brackets, and fuel tank equipment removed for access.

S 217-047

(3) Make sure all tools, cotton wipers (BMS15-5), air movers, hoses, and other equipment is removed from the fuel tank.

S 417-048

(4) Install the applicable main, auxiliary or surge tank access doors (AMM 28-11-01/401, AMM 28-11-02/401, AMM 28-11-03/401).

S 657-049

(5) Refuel the applicable fuel tank (AMM 12-11-01/301).

S 217-050

(6) Make sure there are no fuel leaks (AMM 28-11-00/601).

TASK 28-11-00-107-081

3. Clean the Fuel Tanks Contaminated with Red Dye

A. General

(1) The service criteria and reporting requirements for red dye concentrations can be found in the Boeing service letter 767-SL-28-032, Aircraft Use of Fuels Contaminated with Dye.

(2) Do the procedure that follows if:

(a) The concentration of red dye is more than 0.28 milligrams per liter as shown by the JT-100s analyzer or equivalent.

B. References

(1) AMM 12-11-01/301, Pressure Refueling
(2) AMM 12-11-03/301, Fuel Tank Sump Draining
(3) AMM 28-11-00/201, Fuel Tanks
(4) AMM 28-26-00/201, Defueling
(5) AMM 49-11-00/201, APU Starting and Operation
(6) AMM 71-00-00/201, Start the Engine Procedure

BOEING PROPRIETARY - Copyright (C) - Unpublished Work - See title page for details.

(7) AMM 73-11-02/401, Fuel Pump Filter Element

C. Procedure

S 287-063

(1) Do not start or operate the engines or APU.

S 657-064

(2) Defuel the fuel tanks to the fuel tank sump levels (AMM 28-26-00/201).

S 687-065

(3) Drain the fuel tank sumps, leaving only trapped fuel (AMM 12-11-03/301).

S 907-066

(4) Remove the fuel filter element (AMM 73-11-02/401)

S 207-069

(5) Do a check of the engine fuel filters and bowl for signs of contamination of the fuel.
   (a) Replace the filters if there is contamination.
   (b) If there is no contamination, install the same filter (AMM 73-11-02/401).

S 657-070

(6) Refuel the fuel tanks with new clean fuel (AMM 12-11-01/301).

NOTE: For most airplane fuel tanks, this will give a dilution ratio of new fuel to trapped fuel fuel in the range of 1000:1 to 10,000:1.

S 217-082

(7) Take a fuel sample from the tank sumps (AMM 12-11-03/301).

S 217-083

(8) If you see signs of continued contamination, repeat the defueling and refueling steps above.
   (a) If the contamination continues, remove all fuel from the tank, including trapped fuel (AMM 28-11-00/201).

BOEING PROPRIETARY - Copyright (C) - Unpublished Work - See title page for details.

S 867-084
(9) If the samples from the fuel tank sumps do not show signs of contamination, do the subsequent steps:
(a) Start the APU (AMM 49-11-00/201).
(b) Start the engines (AMM 71-00-00/201).
(c) Let them operate approximately 5-8 minutes or until the dirty fuel is flushed from the fuel system.
(d) Make sure that the engine and its controls operate correctly in all standard power settings.
(e) Stop the APU (AMM 49-11-00/201).
(f) Stop the engines (AMM 71-00-00/201).
(g) Speak to the engine and APU manufacturers about more inspections or tests.

S 207-074
(10) After you operate the engine and APU, remove the fuel filter (AMM 73-11-02/401).

S 207-076
(11) Do a check of the engine fuel filter and the fuel filter bowl for signs of contamination of the fuel.

S 207-077
(12) If you see no signs of contamination, do these steps:
(a) Install the fuel filter (AMM 73-11-02/401).
(b) Operate the airplane as usual.

S 207-078
(13) If you see signs of contamination, do these steps:
(a) Clean the filter bowl.
(b) Replace the fuel filter (AMM 73-11-02/401).
(c) Apply the full procedure described above again.

S 867-086
(14) If the engines do not operate correctly, or if contamination continues, you will possibly have to do more engine inspections and tests.

NOTE: Speak to the engine and APU manufacturer for more procedures for their equipment.

BOEING PROPRIETARY - Copyright (C) - Unpublished Work - See title page for details.

S 207-080

(15) If you operated the engine for a long time with contaminated fuel, you must fully examine the engine fuel system, its components, and the turbine blades.

NOTE: Speak to the engine and APU manufacturer for the appropriate procedures for their equipment.

BOEING PROPRIETARY - Copyright (C) - Unpublished Work - See title page for details.

FUEL TANKS - APPROVED REPAIRS

1. General
   A. This procedure contains these tasks:
      (1) Repair of sealant leaks in the fuel tank structure
      (2) Repair of fuel tank corrosion
      (3) Approved repairs of nonsealant leaks
      (4) Approved repairs of the secondary fuel barrier sealant.
      (5) Temporary repair of leakage in the slat drain tubes in the main fuel tanks.
   B. This procedure contains data on how to prepare, use and cure the sealant and finish materials. This procedure also contains data on how to apply the corrosion resistant finishes in the fuel tank. The sealant and recommended finish materials in this procedure can be used with each other. For example, you can use fully cured corrosion resistant finish as a primer layer (before you apply the sealant) or as a topcoat (that you can apply with a spray gun or brush) over the sealant. Remove the topcoats that you applied before (to the bare metal) in the area of sealant repair unless you know you can use the topcoat with the new sealant.
   C. Before you repair a leak, make an analysis of the source and cause of the leak with the Fuel Leak Detection procedure (AMM 28-11-00/601).
   D. If the cause of the fuel leak is a result of structural damage, do the structural repair. Refer to the Structural Repair Manual before you apply the sealant.

TASK 28-11-00-308-013

2. Repair of Sealant Leaks in the Fuel Tank Structure
   A. General
      (1) It is necessary to use materials that are poisonous and flammable when you repair the sealant. You must have a good flow of air in the area. You must obey all fire safety precautions.
   B. Equipment
      (1) Sealant removal and fairing tools (Fig. 801, Fig. 802)

      NOTE: All equipment used to apply the sealing compound must be clean. All equipment used must be cleaned fully after each sealing task. Two-part compounds, those mixed with activator, become hard. It is not easy to clean the hard sealing compound from the equipment.

BOEING PROPRIETARY - Copyright (C) - Unpublished Work - See title page for details.

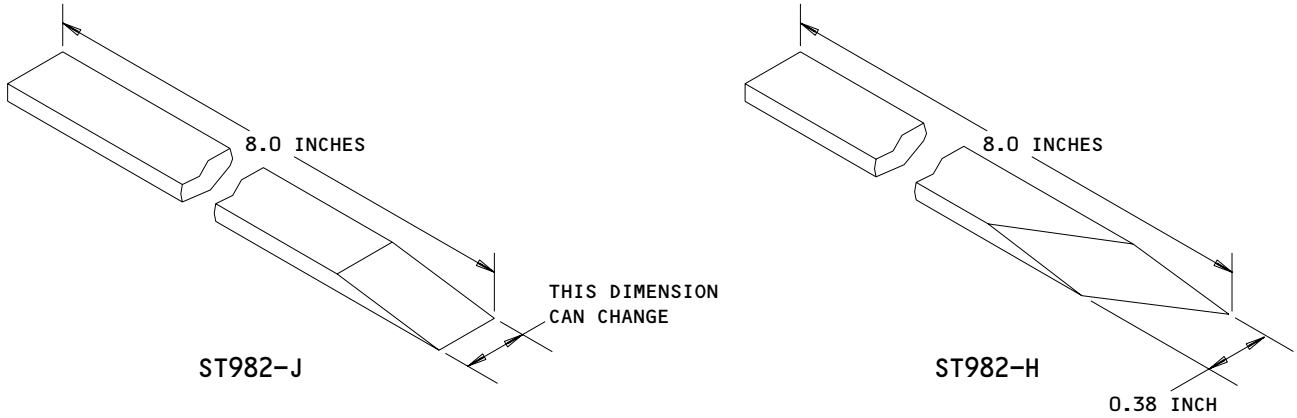

TOOLS TO CUT THE SEALANT

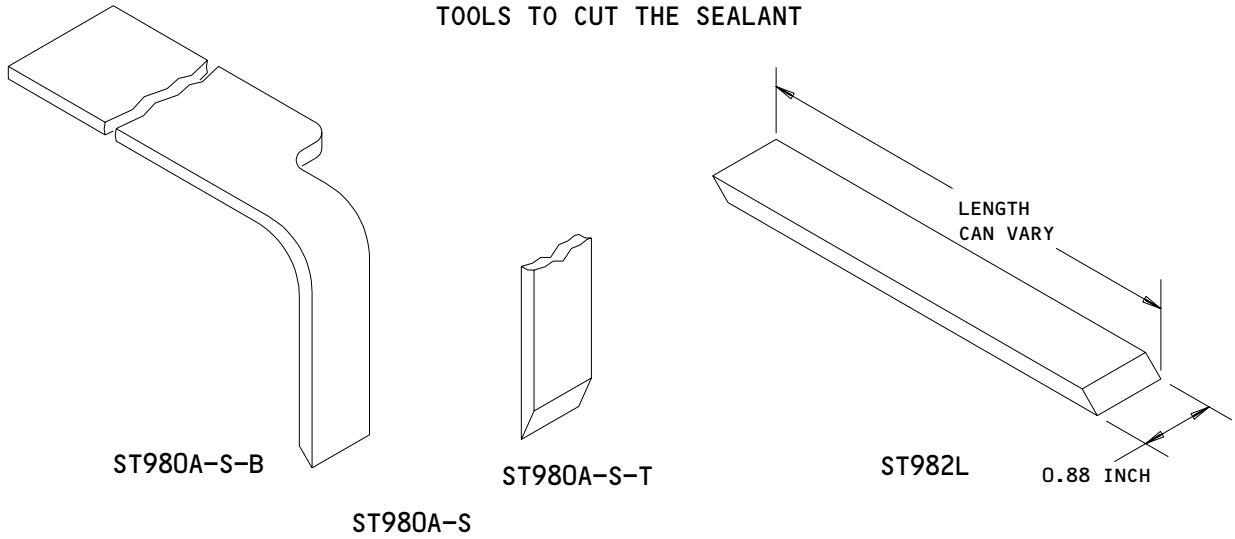

NOTE: THESE TOOLS SHOULD BE MADE OF PLASTIC, HARDWOOD OR METAL NO HARDER THAN 2024-T3 ALUMINUM TO REDUCE THE POSSIBILITY OF DAMAGE TO THE STRUCTURE (PLASTIC AND HARDWOOD ARE RECOMMENDED).

TOOLS TO REMOVE UNWANTED SEALANT
(SCRAPERS)

Sealant Removal Tools
Figure 801

BOEING PROPRIETARY - Copyright (C) - Unpublished Work - See title page for details.

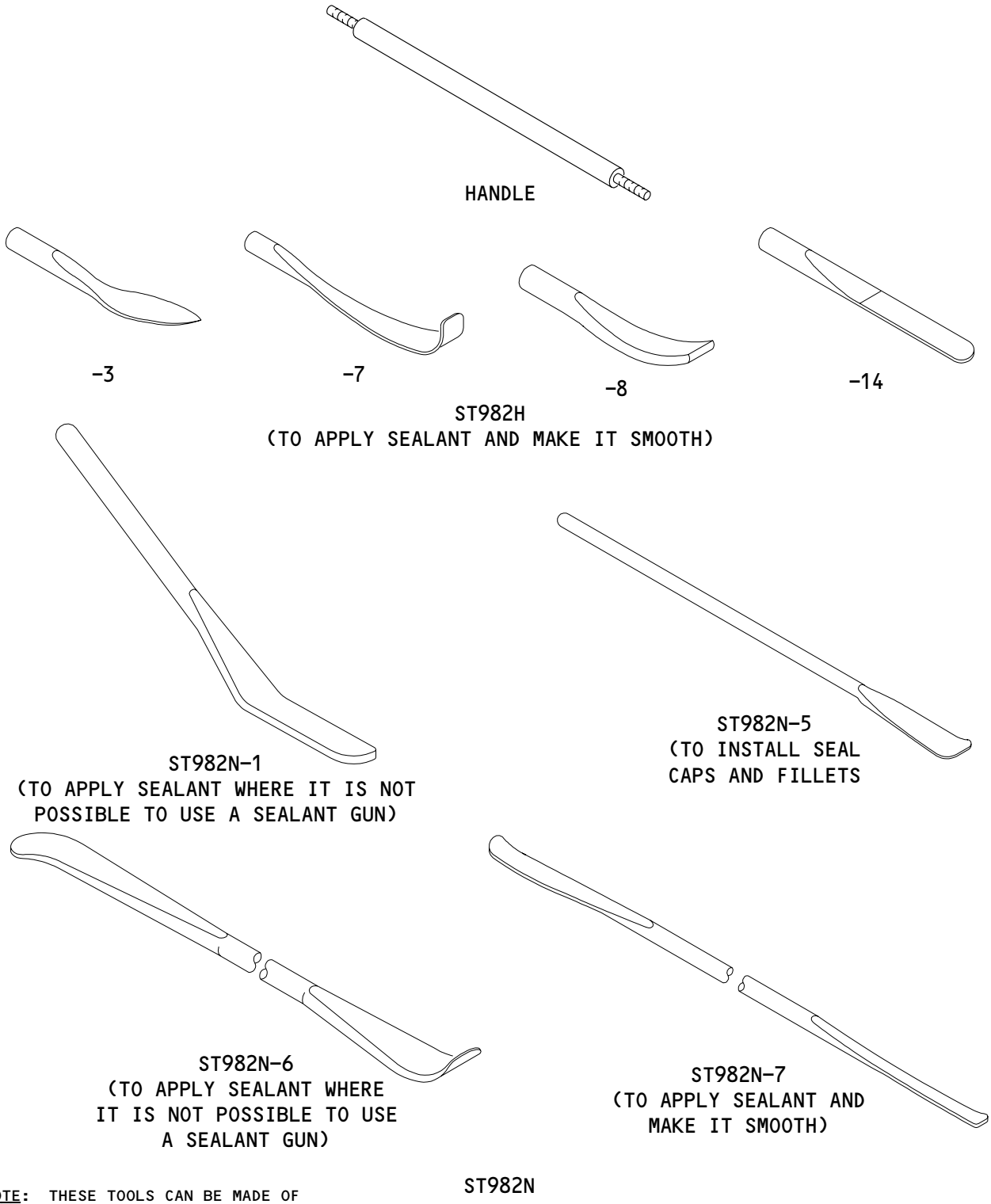

NOTE: THESE TOOLS CAN BE MADE OF 1/4-INCH DIAMETER BRONZE OR STEEL WELDING ROD AND CAN BE PLATED TO IMPROVE THE SMOOTHNESS.

Sealant Application Tools (Spatulas)
Figure 802

BOEING PROPRIETARY - Copyright (C) - Unpublished Work - See title page for details.

(2) Paint brushes - (commercially available)
(3) Neoprene or rubber gloves - (commercially available)
(4) G00034 Cotton Wiper, Process Cleaning Absorbent Wiper (cheesecloth, gauze) BMS15-5
(5) Pipe cleaners - (commercially available)
(6) Funnel brush - (commercially available)
(7) Polyethylene wash bottles, nozzles, cartridges, and plungers - (commercially available)
(8) Sealing gun - (commercially available)
(9) J28006-1 Sealing tool (Fig. 809)
(10) F70230 Temporary Repair Tool (Fig. 811)
(11) Click Patch Kit - SEMCO, 5454 San Fernando Rd., Glendale, CA 91203
(12) Semkit - SEMCO, 5454 San Fernando Rd., Glendale, CA 91203

WARNING: MAKE SURE THE CAPACITY OF THE EXHAST FAN IS MORE THAN THE CAPACITY OF THE AIR BLOWER. THIS WILL MAKE SURE THERE IS A GOOD FLOW OF AIR. THE CORROSION RESISTANT FINISH IS A POISONOUS AND FLAMMABLE COMPOUND WHICH CAN CAUSE INJURY TO PERSONS OR DAMAGE TO EQUIPMENT.

(13) Explosionproof air blower, with sufficient flexible hose to reach all areas in the fuel tanks. The capacity must be 90 to 100 cubic feet per minute.
(14) Explosionproof centrifugal exhaust fan, capacity to be 125 to 150 cubic feet per minute. With approximately 75 feet of 3-inch diameter flexible suction hose, and sufficient delivery hose to remove exhaust air out of the hangar or work area.

BOEING PROPRIETARY - Copyright (C) - Unpublished Work - See title page for details.

(15) Full Face Supplied Air Type Respirator, U.S. Bureau of Mines Approved
(16) Spray Equipment - DeVilbiss Model MBC or JGA, The DeVilbiss Co., 300 Phillips Ave., Toledo, Ohio (Recommended if you apply corrosion resistant finish to a large area)

C. Consumable Materials
(1) Abrasive pad
(a) B00105 Aluminum oxide abrasive - Scotch Brite Sheet
(b) B00101 Aluminum oxide nylon pad, TYPE F
(c) B00102 Aluminum oxide - Bear-Tex
(d) B00103 Aluminum oxide - Microlon
(2) B00168 Abrasive Paper - 320 grit or finer (commercially available)
(3) B00148 Methyl Ethyl Ketone (MEK) - TT-M-261
(4) B00184 Cleaning Solvent - BMS 11-7
(5) Sealant

NOTE: BMS 5-45 Class B sealants are used for fuel tank sealing on this airplane. Class A sealant is a brush-on sealant used as a precoat for the class B sealant. The Class B sealant is used for surface, injections, and fillet seals. The Class C sealant is used for a faying surface when a long squeeze-out life is required. It is important that sealants are mixed with the correct quantities of matched accelerators to get satisfactory results.

Other sealants are not recommended because they cannot be used with the paint primer used in the fuel tanks.

Use one of the sealants that follow:

(a) A00908 Pro-Seal 860, B 1/6

BOEING PROPRIETARY - Copyright (C) - Unpublished Work - See title page for details.

(b) A00767 - Sealant - BMS 5-45

NOTE: Class B is used for sealing gun and spatula applications. Class A is used as a precoat and is brushed on.

(c) A00707 - PR-1826, Class B-1/2

NOTE: Use with PR-1826 primer.

(6) A00057 Cement and Catalyst - Eastman 910

D. References

(1) AMM 28-11-00/201, Fuel Tanks
(2) AMM 28-11-00/601, Fuel Tanks
(3) AMM 28-26-00/201, Defueling
(4) SRM 51-20-01, Protective Treatment of Metallic and Graphite Materials

E. Access

(1) Location Zones

133	Wing Center Section (Left)
134	Wing Center Section (Right)
531	Center Auxiliary Tank (Left)
532	Main Tank - Inboard of Rib No. 10 (Left)
541	Main Tank - Outboard of Rib No. 10 (Left)
542	Surge Tank (Left)
631	Center Auxiliary Tank (Right)
632	Main Tank - Inboard of Rib No. 10 (Right)
641	Main Tank - Outboard of Rib No. 10 (Right)
642	Surge Tank (Right)

F. Prepare for Fuel Tank Repair

S 658-014

(1) Defuel the applicable fuel tank (AMM 28-26-00/201).

S 658-015

(2) Drain and purge the applicable fuel tank (AMM 28-11-00/201).

BOEING PROPRIETARY - Copyright (C) - Unpublished Work - See title page for details.

S 948-016

WARNING: OBEY THE FUEL TANK ENTRY PRECAUTIONS. FAILURE TO OBEY THE FUEL TANK ENTRY PRECAUTIONS COULD CAUSE INJURY TO PERSONS OR DAMAGE TO EQUIPMENT.

(3) Obey the fuel tank entry precautions (AMM 28-11-00/201).

S 158-017

(4) Use the sealant cutting tools (Fig. 801) to remove the bad sealant.
   (a) Cut the bad section away from the fillet seal (Fig. 803).

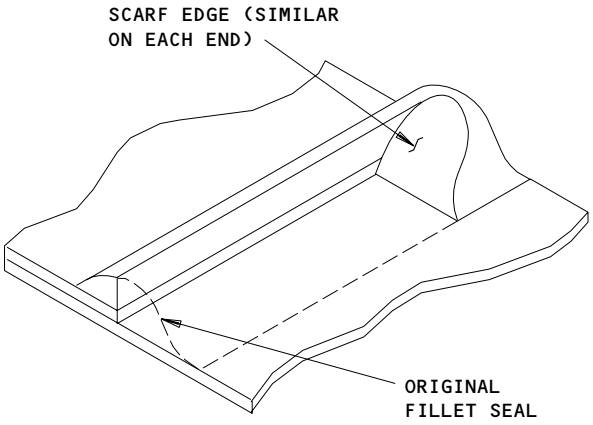

Fillet Seal Removal
Figure 803

BOEING PROPRIETARY - Copyright (C) - Unpublished Work - See title page for details.

1) Cut the ends of the bad sealant at a slope such that the new sealant makes an overlap with the remaining sealant.
2) Make sure you cut the sealant smoothly.

(b) If the fillet seal bond is good, it is not necessary to cut the sealant to the bare metal.
1) Make sure you remove all the loose sealant.

(c) If the bad sealant includes fasteners with fillet seals, do the steps that follow:
1) Cut around the base of the fastener with a sealant cutting tool (Fig. 801).
2) Use pliers and pull the sealant from the fastener.

NOTE: It is not necessary to remove small quantities of the sealant that bond to the fastener.

(d) If an injection seal is bad, do these steps:
1) Remove the bad sealant from short injection channels with hooked wire and small cutting tools.

NOTE: You must disassemble long injection channels (Ref Structural Repair Manual). You can repair bad injection seals if you raise the seal plane to isolate the bad seal from the fuel.

2) Make sure the injection channel is fully clear.

NOTE: If air is caught in the injection channel, the new sealant cannot fully fill the channel.

3) Be careful not to cause damage to the tank structure.

S 368-018

(5) For bad prepack or faying surface sealant, do these steps:
(a) Disassemble the structure around the bad sealant (Ref Structural Repair Manual).
1) If you do not want to disassemble the structure, you can repair the leak if you raise the new seal plane above the old seal plane to isolate the bad sealant from the fuel.

NOTE: The area of bad sealant must be small.

BOEING PROPRIETARY - Copyright (C) - Unpublished Work - See title page for details.

(b) Remove the bad sealant with cutting tools and scrapers.

S 158-019

(6) If there is topcoat on the surface, remove all the topcoat from the sealant repair area unless you know the topcoat is BMS 10-20, Type II finish material.

S 158-089

(7) If the surface has a finish layer (topcoat) on the top of the sealant, remove all of the finish from the sealant repair area.

WARNING: DO NOT GET SOLVENTS IN YOUR MOUTH, OR YOUR EYES, OR ON YOUR SKIN. DO NOT BREATHE THE FUMES FROM SOLVENTS. SOLVENTS ARE HAZARDOUS MATERIALS. SOLVENTS MAY BE FLAMMABLE OR HARMFUL TO THE ENVIRONMENT. REFER TO PRODUCT MATERIAL SAFETY DATA SHEETS (MSDS) AND LOCAL REQUIREMENTS FOR PROPER HANDLING PROCEDURES.

(a) Use a clean cotton wiper (BMS15-5) soaked with solvent, Series 93 (AMM 20-30-93/201) to clean all the surfaces, also the sealant, from which you removed the topcoat.
(b) Rub the surfaces dry with a clean cotton wiper (BMS15-5).
(c) Continue to clean and dry the surfaces until the dry cotton wiper (BMS15-5) stays clean.

S 158-020

(8) Remove all the used sealant precoat from the repair area unless you know that the precoat is BMS 5-45 material in good condition.

WARNING: DO NOT GET SOLVENTS IN YOUR MOUTH, OR YOUR EYES, OR ON YOUR SKIN. DO NOT BREATHE THE FUMES FROM SOLVENTS. SOLVENTS ARE HAZARDOUS MATERIALS. SOLVENTS MAY BE FLAMMABLE OR HARMFUL TO THE ENVIRONMENT. REFER TO PRODUCT MATERIAL SAFETY DATA SHEETS (MSDS) AND LOCAL REQUIREMENTS FOR PROPER HANDLING PROCEDURES.

CAUTION: FULLY CLEAN THE FUEL TANK AREA AFTER YOU USE ABRASIVE MATERIALS IN MAINTENANCE OPERATIONS. DAMAGE TO THE BOOST PUMPS AND OTHER EQUIPMENT CAN OCCUR IF THE FUEL TANK AREA IS NOT CLEAN.

(a) Remove the used precoat with an abrasive pad and solvent, Series 88 (AMM 20-30-88/201).

BOEING PROPRIETARY - Copyright (C) - Unpublished Work - See title page for details.

(b) Clean the surface with a clean brush and a cotton wiper (BMS15-5) soaked with solvent, Series 88 (AMM 20-30-88/201).

NOTE: The area you clean must make an overlap with the adjacent area. The total area must be a minimum of two times larger than the area you apply the sealant.

(c) Rub the area dry with a clean, dry cotton wiper (BMS15-5).
(d) Continue to clean and dry the surface until the dry cotton wiper (BMS15-5) stays clean.

S 218-021
(9) Make sure that all fasteners in the sealant repair area are installed and tightened unless you must install the fastener after you apply the faying surface sealant.

NOTE: You cannot install and tighten most fasteners after you apply the sealant.

S 378-022
(10) If the alodine metal surface treatment is worn or damaged, you must alodize the metal surface before you apply the new sealant or finish material.

CAUTION: USE ONLY ALODINE 600 TO REPAIR ALUMINUM WING SURFACES. PRIMER ADHESION PROBLEMS CAN OCCUR IF OTHER ALODINE SOLUTIONS ARE USED.

(a) Apply an alodine layer to the surface with Alodine 600 (SRM 51-20-01).

S 118-023
(11) Immediately before you apply the sealant, clean the surface with BMS 11-7 solvent and rub dry.

NOTE: Do not let the solvent dry on the surface. Do not touch the area with your fingers.

BOEING PROPRIETARY - Copyright (C) - Unpublished Work - See title page for details.

G. Prepare, Apply, and Cure Sealants

NOTE: It is very important to mix, use and keep sealants correctly.

You must follow approved procedures to prevent damage to equipment or injury to persons.

Fully mix all components per manufacturer's instructions.

Do not mix sealants that you apply with a brush until you use them.
Do not put thinners in the sealant.

Keep the sealants covered when not in use.

S 398-024

CAUTION: DISCARD ALL SEALANT THAT DOES NOT APPLY SMOOTHLY. INCORRECTLY APPLIED SEALANT OR TOPCOAT COULD CAUSE DAMAGE TO EQUIPMENT.

(1) Storage of Sealant Compound that is not Mixed

NOTE: You should keep sealant at temperatures between 50° to 80°F (10°C to 26.7°C).

(a) Do a test of sealant that is kept for 6 months or more.
(b) Mix a sample of the sealant base material and the curing compound in a container, at room temperature.
(c) Apply a fillet seal to a sample piece of structure to find the time necessary before a sample of the sealant is not tacky.
(d) Compare this time with maximum permitted tack-free time given in the applicable sealant specification.

BOEING PROPRIETARY - Copyright (C) - Unpublished Work - See title page for details.

(e) If this time is more than the maximum permitted time, discard the sealant.
(f) Storage life may be extended only once by a maximum of 3 months.

S 398-025
(2) Mix the Sealant Compound

WARNING: MAKE SURE THERE IS A GOOD FLOW OF AIR IN THE AREA THAT YOU MIX THE SEALANT COMPOUNDS. SEALANT COMPOUNDS ARE POISONOUS.

(a) Mix only the quantity of sealant necessary for the task to be done.

NOTE: Identify the necessary sealant for the repair before you mix it.

The use of premeasured Semkits, purchased from the vendor, is recommended, especially for small repairs.

(b) Make sure all equipment used to mix the sealant is clean.
(c) Mix the sealant compounds per the manufacturer's instructions.

NOTE: Always use the curing compound with the base compound from the same repair kit. Do not mix the contents of one repair kit with that of another kit. Do not mix the sealant too much or the time you can apply the sealant will decrease.

The mixing of BMS 5-45 sealant may be modified using an accelerator-to-base ratio range of 8.4:100 to 16.8:100 by volume or 10:100 to 20:100 by weight. The 10:100 ratio is standard for B-2 sealant. The 20:100 ratio results in a material with an application time of approximately 1/2 hour or a tack-free time of 6 hours, and a cure time of approximately 24 hours at 77°F and 50% relative humidity. The purchase of premeasured kits from the vendor is recommended to prevent errors when you mix the sealant.

CAUTION: MAKE SURE NO AIR BUBBLES ARE IN THE SEALANT WHEN YOU MIX IT. IF THERE ARE AIR BUBBLES IN THE SEALANT, IT WILL NOT BOND CORRECTLY.

(d) Mix the curing compound and base compound until the sealant is of a constant, equal color.
1) If a mixing machine is not available, use a clean spatula.

BOEING PROPRIETARY - Copyright (C) - Unpublished Work - See title page for details.

(e) Put the sealant in a container cleaned with solvent, Series 93 (AMM 20-30-93/201).

S 398-026

(3) Storage of mixed BMS 5-45 sealant compound

CAUTION: DO NOT REFRIGERATE MIXED SEALANT AFTER YOU THAW IT. THE SEALANT IS NOT USABLE IF IT IS FROZEN MORE THAN ONCE.

(a) If you do not use the mixed BMS 5-45 sealant immediately, you can keep the sealant for a longer time if it is refrigerated.
  1) Put the sealant in a sealed container.
  2) Write the date you mix the sealant, sealant type, class, supplier, and date when the sealant cannot be used.
  3) Discard all sealant kept more than 21 days at -40°F (-40°C).
  4) Discard all sealant kept more than 7 days at -20°F (-28.9°C).

S 398-027

(4) Sealant application time
  (a) The time in which you can apply the mixed BMS 5-45 sealant is 2 hours at 77°F (25°C) and 50% relative humidity.
  (b) The time in which you can apply the mixed Pro-Seal 860, B 1/6 is 10 minutes at 77°F (25°C) and 50% relative humidity.
  (c) The time in which you can apply the mixed PR-1826, Class B-1/2 is 1/2 hour at 77°F (25°C) and 50% relative humidity.

S 398-028

(5) BMS 5-45 (recommended) sealant squeeze-out life
  (a) Squeeze-out life is the maximum length of time you can use the sealant for structure assembly when you apply faying surface seals.
  (b) The time, shown in Fig. 804, is the maximum time between when you start to thaw the sealant or mix the sealant that is not frozen and the final attachment of the mating surfaces.

S 398-029

(6) Sealant curing
  (a) You must let the BMS 5-45 sealant cure until is tack-free (Fig. 804) before you continue maintenance operations in the fuel tank or refuel the fuel tank.
    1) Both the BMS 5-45 fillet seal and the BMS 5-45 precoat must be in a tack-free condition (Fig. 804).
    2) The sealant will not bond correctly if fuel is added before the precoat is in a tack-free condition.

BOEING PROPRIETARY - Copyright (C) - Unpublished Work - See title page for details.

3) Because there is no quick-cure for BMS 5-45 sealant, it is recommended that a sealant that does not require a precoat be used for quick repairs (Fig. 804).

(b) Pro-Seal 860, B 1/6 can touch fuel after the sealant is not tacky and a minimum of 2 hours after you applied the sealant.

(c) PR-1826, Class B-1/2 can touch fuel after 2-1/2 hours and has a cure time of 3 hours.

WARNING: DO NOT START OR STOP THE AIR BLOWER WITH THE AIR HOSE IN IN THE FUEL TANK. OBEY ALL SAFETY PRECAUTIONS WHEN YOU USE WARM AIR. FAILURE TO OBEY ALL SAFETY PRECAUTIONS COULD CAUSE INJURY TO PERSONS OR DAMAGE TO EQUIPMENT.

CAUTION: DO NOT APPLY SEALANT WHEN THE STRUCTURE TEMPERATURE IS LESS THAN 50°F (10°C) OR MORE THAN 140°F (60°C) . THE SEALANT WILL NOT CURE CORRECTLY IF THE STRUCTURE TEMPERATURE IS OUT OF RANGE.

(d) The best conditions to cure the sealant area are at an ambient temperature of 77°F (25°C) and a relative humidity of 50 ±5 percent, with a good flow of air in the area.

1) Relative humidity is an important factor in the cure time for sealants.

a) You must know the relative humidity at all times during the sealant operations.

b) If the relative humidity is less than 40 percent it slows the cure of the sealant.

c) To increase the relative humidity, let moist, warm air, at a temperature of less than 120°F (49°C), flow over the repair area.

NOTE: In hot, dry climates if you put a pan of water in the fuel tank near the repair area it could add the necessary humidity.

d) Make sure the water added to the air contains less than 100 parts per million of total solids and less than 10 parts per million of chlorides.

BOEING PROPRIETARY - Copyright (C) - Unpublished Work - See title page for details.

SEALANT	CLASS	APPLICATION TIME (MAXIMUM) HOURS [1]	TACK-FREE TIME (MINIMUM) HOURS [1]	SQUEEZE-OUT LIFE (MAXIMUM) HOURS [1]	CURING TIME (MINIMUM) HOURS [1]
PROSEAL 860 [3]	B-1/6	1/6	1.5 [2]	--	4
PR-1826 [4]	B-1/2	1/2	2.5	--	3
BMS 5-45	A-2 (GRADE 1)	2	36	--	72
	A-2 (GRADE 2)	2	24	--	48
	B-1/2 [6]	1/2	10	--	12
	B-2	2	12	6	24
	C-24 [5]	8	--	24	168
	C-48 [5]	12	--	48	336
	C-168 [5]	48	--	168	1,344

[1] AT 77°F (25°C) AND 50% RELATIVE HUMIDITY AMBIENT CONDITIONS. OTHER TEMPERATURE AND RELATIVE HUMIDITY CONDITIONS WILL CHANGE THE TIMES.

[2] DO NOT LET FUEL TOUCH THE SEALANT UNTIL IT IS NOT TACKY FOR A MINIMUM OF 2 HOURS.

[3] WHEN YOU USE PROSEAL 860, DO NOT USE A PRECOAT. PROSEAL 860 IS RECOMMENDED FOR SMALL REPAIRS ONLY, DUE TO ITS SHORT APPLICATION TIME. AVAILABLE FROM COURTAULDS AEROSPACE, BERKELEY, CALIFORNIA.

[4] USED TO REPAIR FILLET SEALS OF BMS 5-45. AVAILABLE FROM COURTAULDS AEROSPACE, BERKELEY, CALIFORNIA. PR-1826 PRIMER IS REQUIRED BEFORE THE USE OF PR-1826 SEALANT.

[5] USED WITH FAYING SURFACE SEALS THAT HAVE A LONG SQUEEZE-OUT LIFE.

[6] MIX BMS 5-45, CLASS B-2 SEALANT WITH A 20:100 ACCELERATOR/BASE RATIO BY WEIGHT, OR GET THIS SEALANT PRE-MIXED. IF THE SEALANT IS MIXED WITH A 20:100 ACCELERATOR/BASE RATIO, THE TACK-FREE TIME IS CHANGED TO N/A AND THE CURING TIME IS CHANGED TO 6 HOURS.

Sealant Usable Time
Figure 804

BOEING PROPRIETARY - Copyright (C) - Unpublished Work - See title page for details.

2) If warm, moist air, at a temperature of less than 120°F (48.9°C), flows over the sealant, it decreases the curing time.
3) If you increase the temperature of the tank structure, but not more than 120°F (48.9°C), it decreases the curing time.

CAUTION: MAKE SURE THE TEMPERATURE OF THE TANK SURFACE THAT YOU APPLY THE SEALANT TO IS AT A TEMPERATURE MORE THAN THE AMBIENT TEMPERATURE. IF THE RELATIVE HUMIDITY IS LARGE, CONDENSATION FORMS IF THE TEMPERATURE OF THE METAL SURFACE IS LESS THAN THE AMBIENT TEMPERATURE. THE TANK SURFACE MUST BE DRY TO APPLY THE SEALANT.

4) For BMS 5-45 sealant, if you keep the humidity constant, the times, shown in Fig. 804, change as follows for each 20°F (11.1°C) change in temperature:
   a) Tack-free times are approximately one-half as long for each 20°F (11.1°C) increase in temperature.
   b) Tack-free times are approximately double for each 20°F (11.1°C) decrease in temperature.

S 368-033
(7) To apply a new fillet seal, do the steps that follow:
(a) BMS 5-45 sealant is used to apply all fillet seals after a precoat of BMS 5-45 sealant.

NOTE: Precoat is optional when you use Pro-Seal 860, B 1/6 sealant, a special adhesion promoter is recommended before the use of Pro-Seal 860, B 1/6 sealant. PR-1826 primer is required before the use of PR-1826 sealant. Obey the instructions from the manufacturer.

1) Examine the seal area to make sure you have the correct selection of tools for the job.
(b) Apply a thin layer (precoat) of correctly accelerated BMS 5-45 sealant to the surface with a stiff bristled brush (Fig. 805).
1) Make sure you apply precoat into all crevices and the full length of the area that you will apply sealant to.
2) Apply the precoat at a width of 1/2 inch on each side of the seams.

BOEING PROPRIETARY - Copyright (C) - Unpublished Work - See title page for details.

3) Make sure the precoat is applied smoothly.

NOTE: If you let the precoat fully cure, clean with solvent, Series 93 (AMM 20-30-93/201) before you apply the fillet seal. It is not necessary to let the precoat cure unless the precoat and the sealant you use for a fillet seal are from different manufacturer product lines. For example, do not use a precoat of BMS 5-45 with a fillet seal of PR-1826.

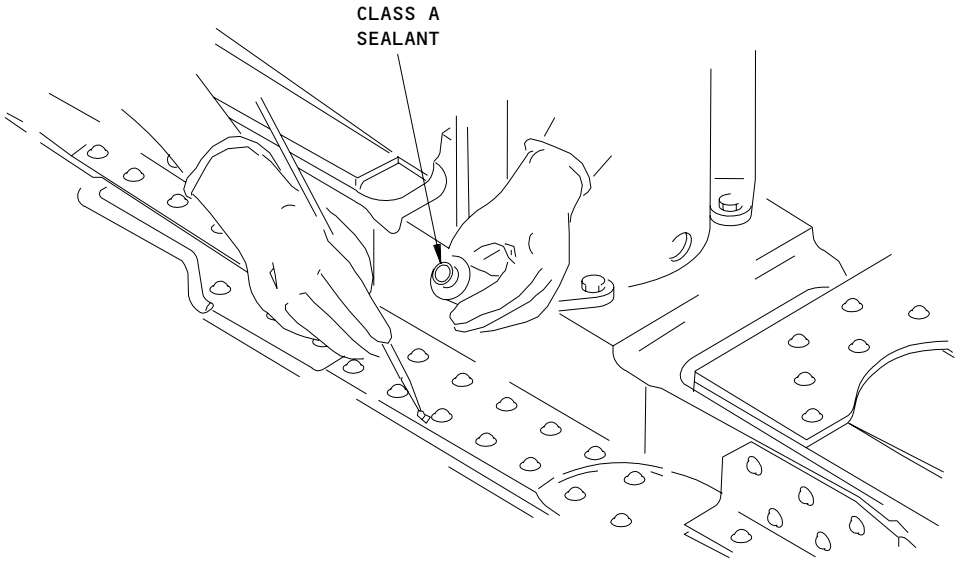

Apply the Precoat
Figure 805

BOEING PROPRIETARY - Copyright (C) - Unpublished Work - See title page for details.

WARNING: DO NOT GET SOLVENTS IN YOUR MOUTH, OR YOUR EYES, OR ON YOUR SKIN. DO NOT BREATHE THE FUMES FROM SOLVENTS. SOLVENTS ARE HAZARDOUS MATERIALS. SOLVENTS MAY BE FLAMMABLE OR HARMFUL TO THE ENVIRONMENT. REFER TO PRODUCT MATERIAL SAFETY DATA SHEETS (MSDS) AND LOCAL REQUIREMENTS FOR PROPER HANDLING PROCEDURES.

(c) If you let the precoat cure, clean with solvent, Series 93 (AMM 20-30-93/201) before you apply the fillet seal.

NOTE: It is not necessary to let the precoat cure. You can apply the fillet seal any time after you apply the precoat, if they are from the same manufacturer product lines.

(d) If you use PR-1826, Class B-1/2 sealant, let the PR-1826 primer have a minimum tack-free time of 30 minutes.

1) If the PR-1826 primer becomes contaminated or sealant is not applied within 24 hours, it is necessary to re-prime

WARNING: DO NOT GET SOLVENTS IN YOUR MOUTH, OR YOUR EYES, OR ON YOUR SKIN. DO NOT BREATHE THE FUMES FROM SOLVENTS. SOLVENTS ARE HAZARDOUS MATERIALS. SOLVENTS MAY BE FLAMMABLE OR HARMFUL TO THE ENVIRONMENT. REFER TO PRODUCT MATERIAL SAFETY DATA SHEETS (MSDS) AND LOCAL REQUIREMENTS FOR PROPER HANDLING PROCEDURES.

a) Remove the used primer with an abrasive pad and series 93 solvent (AMM 20-30-93/201).

b) Clean the surface with a clean brush and cotton wiper (BMS15-5), soaked with series 93 solvent (AMM 20-30-93/201).

NOTE: The area you clean must overlap with the adjacent area. Make the total area a minimum of two times as large as the area you apply sealant to.

BOEING PROPRIETARY - Copyright (C) - Unpublished Work - See title page for details.

c) Rub dry with a clean, dry cotton wiper (BMS15-5).
d) Continue to clean and dry the surface until the dry cotton wiper (BMS15-5), stays clean.
e) Re-prime the surface.

CAUTION: MAKE SURE YOU APPLY THE FILLET SEAL CAREFULLY TO PREVENT AIR BUBBLES IN THE SEALANT. THE FILLET SEAL WILL NOT BOND CORRECTLY IF THERE ARE AIR BUBBLES IN THE SEALANT.

(e) Apply a small fillet seal of BMS 5-45 or Pro-Seal 860, B 1/6 sealant with the sealing gun (Fig. 806).
1) When you use a nozzle tip, point the nozzle tip into the seam, almost perpendicular to the direction of travel.

NOTE: Keep a bead of sealant in front of the nozzle tip.

(f) Use a sealant fairing tool and push the first fillet seals tightly into position (Fig. 807).
1) Apply all the first fillet seals.
2) Make sure all sealant fairing tools are clean.
3) Do not use solutions or lubricants to help the fairing tools move on the sealant.
4) Clean the fairing tools frequently with the clean gauze.

(g) If the first fillet seal has cured but is not clean, then you must clean it before you apply the second fillet seal.

(h) Apply BMS 5-45 or Pro-Seal 860, B 1/6 sealant a second time to make a full bodied fillet seal.

NOTE: Use a larger nozzle for the second fillet seal.

1) If you use an extruded nozzle, do the steps that follow:
a) Cut the nozzle to make a fit of the dimensions shown in Fig. 808.
b) Push the nozzle head against the surfaces such that the fillet seal you apply is thickest in the middle of the surfaces.

NOTE: Keep the nozzle of the sealing gun near the surface to prevent air bubbles.

2) If you do not use an extruded nozzle, use a sealant fairing tool to make a full bodied fillet seal.
a) Remove all air bubbles and re-entrant fillet seal edges.

BOEING PROPRIETARY - Copyright (C) - Unpublished Work - See title page for details.

(i) If it is necessary, do this Task: Apply the Corrosion Resistant Finish (Topcoat) (AMM 28-11-00/701).

NOTE: A layer of corrosion resistant finish is necessary only to protect bare (anodized) metal. It is not necessary to apply a layer of corrosion resistant finish on sealant. Corrosion resistant finish can be applied on sealant, but it is not necessary. Usually topcoat is applied to sealant only when it must be applied to protect adjacent bare metal.

S 368-034

(8) Repair of the fastener seals (Ref Structural Repair Manual).

(a) Repair self-sealing rivets.

1) Self-sealing rivets are used a lot in skin panels in the fuel tank area. If you find a leak at a rivet, you must replace the rivet to make a permanent repair. You can make a temporary repair if you make a permanent repair the next time you go into a the fuel tank per the structural repair manual.

2) To make a temporary repair of a self-sealing rivet, use one of the procedures that follows:

a) Apply the sealant to a self-sealing rivet with a sealing tool (Fig. 810)

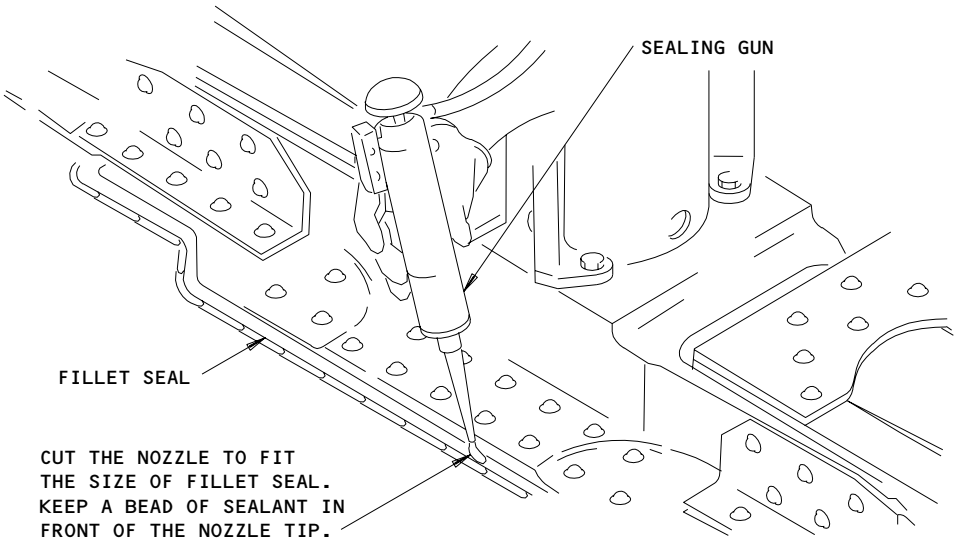

Apply a Fillet Seal
Figure 806

BOEING PROPRIETARY - Copyright (C) - Unpublished Work - See title page for details.

b) Apply the sealant to a self-sealing rivet with a temporary repair tool (Fig. 811)
c) Install a Click Patch

3) Apply the sealant to a self-sealing rivets with a sealing tool (Fig. 809, 810).

NOTE: Use this procedure for fuel leaks at mechanically sealed rivets only.

a) Clean the surface of the adapter with the emery cloth if it is necessary.

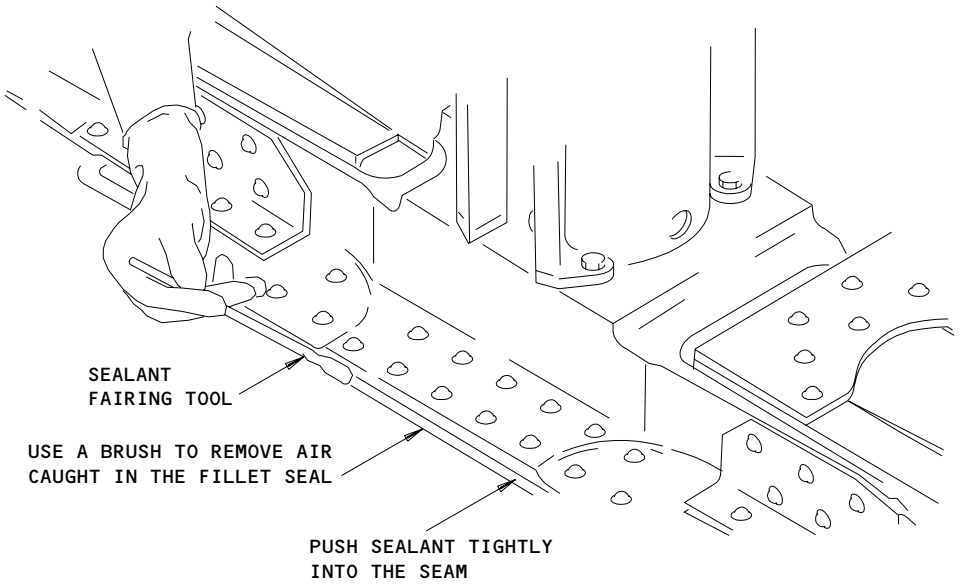

Push the First Fillet Seal into the Seam
Figure 807

BOEING PROPRIETARY - Copyright (C) - Unpublished Work - See title page for details.

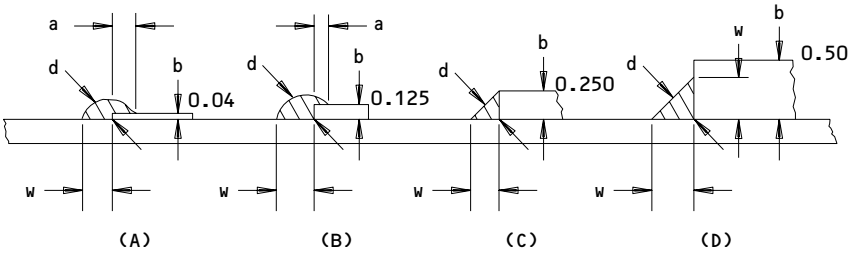

d = 0.15 INCH (MINIMUM)
w = 0.25-0.50 INCH
a+b = w, EXCEPT a=ZERO WHEN b=0.25 INCH OR MORE

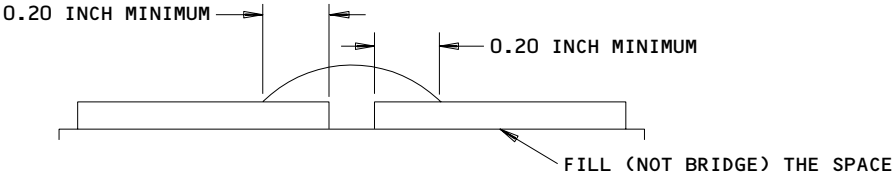

Re-Entrants Fillet Seal and Dimensions of Full Bodied Fillet Seals
Figure 808

BOEING PROPRIETARY - Copyright (C) - Unpublished Work - See title page for details.

b) Remove the paint from around the rivet that leaks.

WARNING: DO NOT GET SOLVENTS IN YOUR MOUTH, OR YOUR EYES, OR ON YOUR SKIN. DO NOT BREATHE THE FUMES FROM SOLVENTS. SOLVENTS AR HAZARDOUS MATERIALS. SOLVENTS MAY BE FLAMMABLE OR HARMFUL TO THE ENVIRONMENT. REFER TO PRODUCT MATERIAL SAFETY DATA SHEETS (MSDS) AND LOCAL REQUIREMENTS FOR PROPER HANDLING PROCEDURES.

c) Clean the surface with solvent, Series 93 (AMM 20-30-93/201)

NOTE: Do not touch the surface with your fingers after you clean it.

WARNING: DO NOT LET THE ADHESIVE TOUCH YOUR SKIN. THE ADHESIVE CAUSES INJURY TO SKIN.

d) Use a cotton-tipped stick to apply a thin layer of Eastman 910 adhesive to the surface of the adapter (Step 1, Fig. 810).
e) Put the adapter over the center of the rivet and tightly push against the wing surface for 10 seconds (Step 2, Fig. 810).
f) Release your hold on the adapter.
g) Do not touch the adapter for 15 minutes.
h) Remove the screw from the sealant loading port (Fig. 809).
i) Turn the screw in the sealant bleed port until only one turn will remove it.
j) Remove the pressure bolt.
k) Drain all collected fuel.
l) Install the pressure bolts (approximately 12 turns or 1/2 inch).
m) Put BMS 5-45 sealant in the sealant loading port until it comes out of the sealant bleed port (Step 3, Fig. 810).
n) Install the screw in the sealant loading port.
o) Tighten the screw in the sealant bleed port.
p) Tighten the pressure bolt to 5 pound-inches.
q) Hold the pressure bolt at 5 pound-inches for 5 minutes.
r) Hit the sides of the adapter lightly with a small hammer or a mallet (Step 4, Fig. 810) to remove the adapter.
s) Examine the repair for fuel leaks.
t) If the fuel leak continues, do the procedure again.
u) If you must replace the self-sealing rivet, refer to the structural repair manual.

BOEING PROPRIETARY - Copyright (C) - Unpublished Work - See title page for details.

WARNING: DO NOT GET SOLVENTS IN YOUR MOUTH, OR YOUR EYES, OR ON YOUR SKIN. DO NOT BREATHE THE FUMES FROM SOLVENTS. SOLVENTS ARE HAZARDOUS MATERIALS. SOLVENTS MAY BE FLAMMABLE OR HARMFUL TO THE ENVIRONMENT. REFER TO PRODUCT MATERIAL SAFETY DATA SHEETS (MSDS) AND LOCAL REQUIREMENTS FOR PROPER HANDLING PROCEDURES.

v) Clean the sealant from the wing surface and the adapter with solvent, Series 93 (AMM 20-30-93/201)
w) Do not try to clean the adhesive from the wing surface.

NOTE: The adhesive wears off in 1 to 2 weeks.

4) Apply the sealant to a self-sealing rivet with a temporary repair tool (Fig. 811).
a) Remove the paint from around the rivet that leaks with emery cloth that is approved to remove chemical paint.

WARNING: DO NOT GET SOLVENTS IN YOUR MOUTH, OR YOUR EYES, OR ON YOUR SKIN. DO NOT BREATHE THE FUMES FROM SOLVENTS. SOLVENTS ARE HAZARDOUS MATERIALS. SOLVENTS MAY BE FLAMMABLE OR HARMFUL TO THE ENVIRONMENT. REFER TO PRODUCT MATERIAL SAFETY DATA SHEETS (MSDS) AND LOCAL REQUIREMENTS FOR PROPER HANDLING PROCEDURES.

b) Clean the temporary repair tool and the wing surface with solvent, Series 93 (AMM 20-30-93/201).

NOTE: Do not touch the wing surface with your fingers after you clean it.

c) Make a mark on the wing surface to show the position of the temporary repair tool when you use it.
d) Fill the temporary repair tool with mixed BMS 5-45 sealant.
e) Put the temporary repair tool into a small rivet gun.
f) Put the O-ring of the temporary repair tool on the wing surface at the identified location.

CAUTION: ALWAYS KEEP THE TEMPORARY REPAIR TOOL PERPENDICULAR TO THE WING SURFACE. IF YOU DO NOT KEEP THE TEMPORARY REPAIR TOOL PERPENDICULAR TO THE WING SURFACE, DAMAGE TO THE WING SURFACE COULD OCCUR.

g) Operate the rivet gun until sealant is applied around the rivet that leaks.
h) Examine the repair for fuel leaks.

BOEING PROPRIETARY - Copyright (C) - Unpublished Work - See title page for details.

i) If the fuel leak continues, do the procedure again.
j) If you must replace the self-sealing rivet, refer to the structural repair manual.
k) Clean the sealant from the temporary repair tool and the wing surface with solvent, Series 93 (AMM 20-30-93/201).

NOTE: Make sure you do not touch the area with the new sealant.

5) Install a Click Patch.
a) You can use a Click Patch kit to repair fuel leaks through Class C (Heavy Seep) (AMM 28-11-00/601).
b) Click Patch kits contain flat disks (for fasteners that do not come out of the surface) and hatted discs (for rivets or bolts that are above the wing surface). The discs are put on the fasteners that leak.
c) The subsequent limits apply to Click Patch repairs:
1 You can install a Click Patch only after you make sure there are no structural cracks in the area of the fuel leak.
2 The maximum size of a Click Patch is 1.25 inches in diameter.
3 A Click Patch is a temporary repair and you must make a permanent repair when possible.

(b) Apply a fillet seal to a sealed fastener.
1) Apply a precoat of correctly accelerated BMS 5-45 sealant to the fastener and the area 1/2 inch in width in all directions from the fastener.

NOTE: Precoat is optional when you use Pro-Seal 860, B 1/6 sealant, a special adhesion promoter is recommended before the use of Pro-Seal 860, B 1/6 sealant. PR-1826 primer is required before the use of PR-1826 sealant. Obey the instructions from the manufacturer.

a) Use a stiff, bristled brush to apply the precoat on the surfaces and into the crevices.

BOEING PROPRIETARY - Copyright (C) - Unpublished Work - See title page for details.

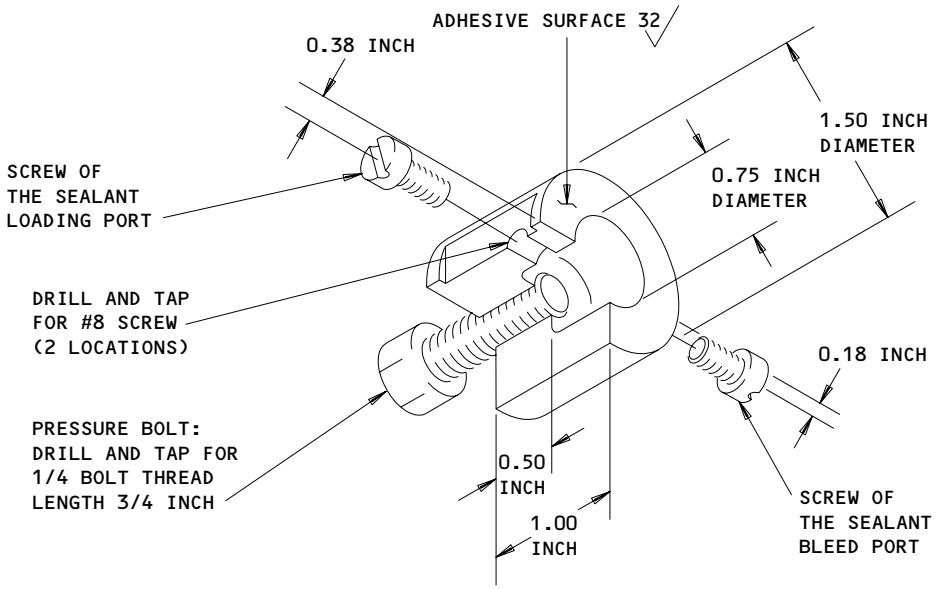

NOTE: MATERIAL - MILD STEEL
CADMIUM PLATED

Sealing Tool (J28006) for Rivets that Leak
Figure 809

BOEING PROPRIETARY - Copyright (C) - Unpublished Work - See title page for details.

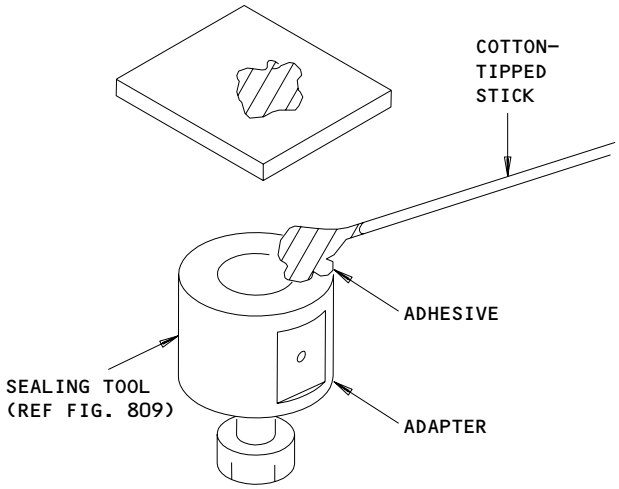

STEP 1

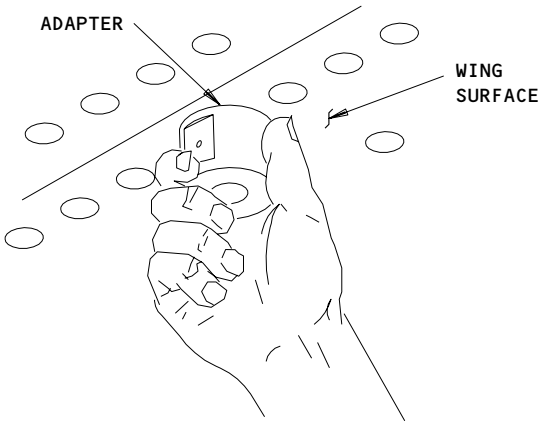

STEP 2

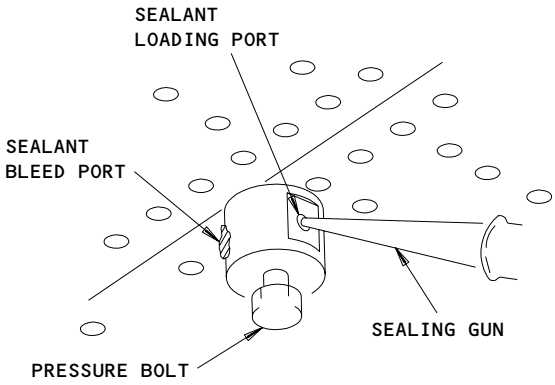

STEP 3

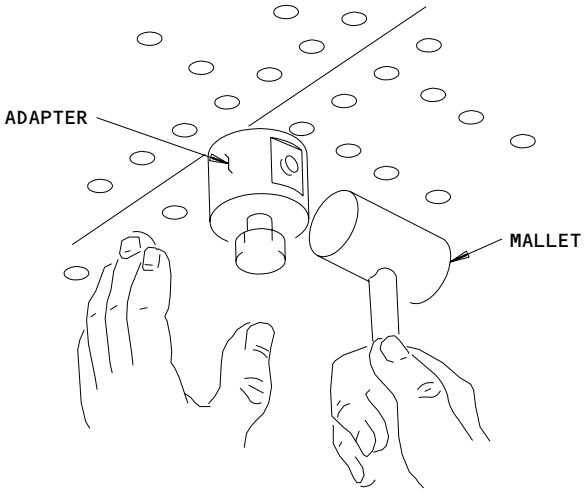

STEP 4

Temporary Repair of Self-Sealing Rivets
Figure 810

BOEING PROPRIETARY - Copyright (C) - Unpublished Work - See title page for details.

b) Let the precoat cure until it is not tacky.

NOTE: It is not necessary to let the precoat cure. But, for the class A-2 precoat, if you let it cure for a minimum of 30 minutes the class B-2 sealant will bond better. If the precoat is fully cured make sure you clean the precoat with solvent, Series 93 (AMM 20-30-93/201) before you apply the class B sealant.

2) If you use PR-1826, Class B-1/2 sealant, let the PR-1826 primer have a minimum tack-free time of 30 minutes.
3) If the PR-1826 primer becomes contaminated or sealant is not applied within 24 hours, it is necessary to re-prime

WARNING: DO NOT GET SOLVENTS IN YOUR MOUTH, OR YOUR EYES, OR ON YOUR SKIN. DO NOT BREATHE THE FUMES FROM SOLVENTS. SOLVENTS ARE HAZARDOUS MATERIALS. SOLVENTS MAY BE FLAMMABLE OR HARMFUL TO THE ENVIRONMENT. REFER TO PRODUCT MATERIAL SAFETY DATA SHEETS (MSDS) AND LOCAL REQUIREMENTS FOR PROPER HANDLING PROCEDURES.

a) Remove the used primer with an abrasive pad and series 93 solvent (AMM 20-30-93/201).

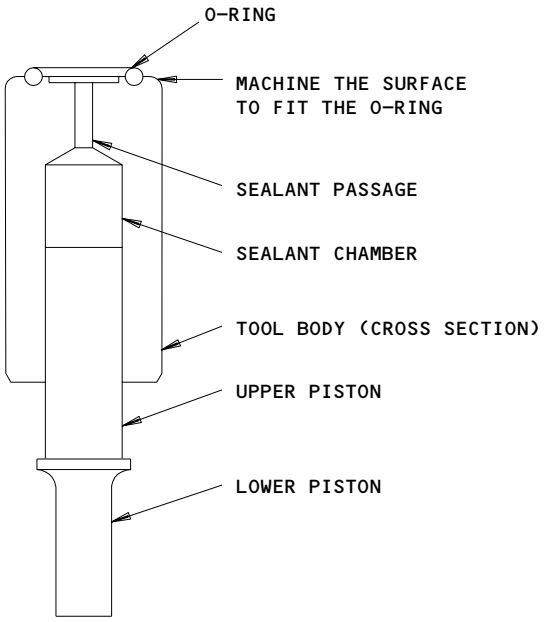

Temporary Repair Tool (F70230) for Self-Sealing Rivets
Figure 811

BOEING PROPRIETARY - Copyright (C) - Unpublished Work - See title page for details.

b) Clean the surface with a clean brush and cotton wiper (BMS15-5), soaked with series 93 solvent (AMM 20-30-93/201).

NOTE: The area you clean must overlap with the adjacent area. Make the total area a minimum of two times as large as the area you apply sealant to.

c) Rub dry with a clean, dry cotton wiper (BMS15-5).
d) Continue to clean and dry the surface until the dry cotton wiper (BMS15-5), stays clean.
e) Re-prime the surface.

4) Use a sealing gun or spatula and apply a layer of BMS 5-45, Pro-Seal 860, B 1/6 or PR-1826 Class B-1/2 sealant around and on the fastener.
5) Move the sealant with a sealant fairing tool until you get the dimensions shown in Fig. 812 for the fillet seal.

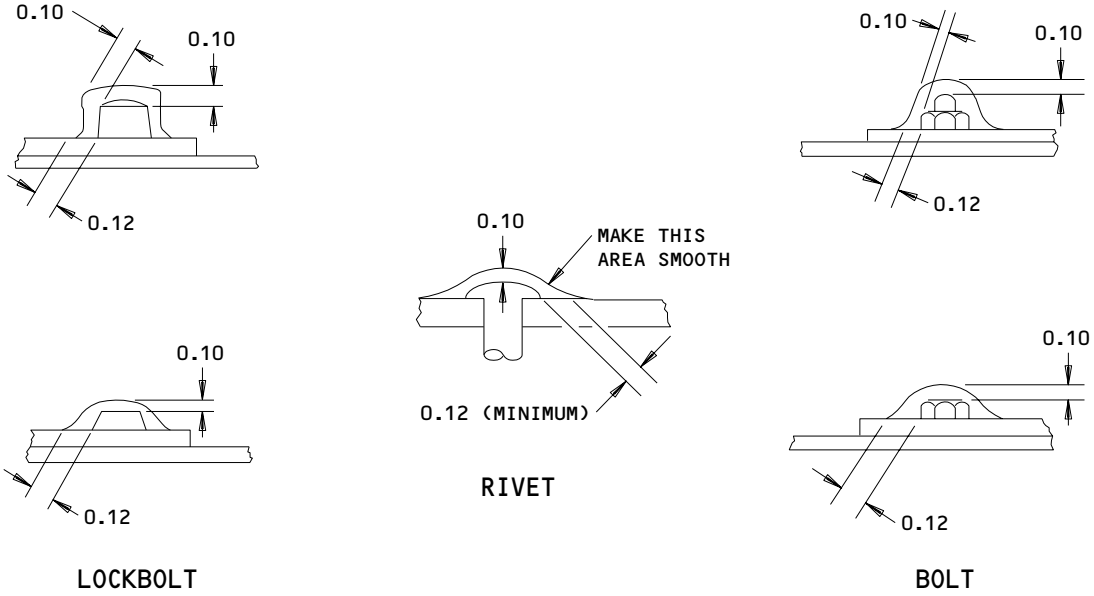

NOTE: ALL DIMENSIONS ARE IN INCHES.

Dimensions of Fillet Seals (Inches) for Fasteners
Figure 812

BOEING PROPRIETARY - Copyright (C) - Unpublished Work - See title page for details.

6) Examine the sealant for holes, bubbles, or spaces.
   a) If there are holes, bubbles or spaces, do the procedure again.
7) Apply the corrosion resistant finish (topcoat).

   NOTE: Follow the procedure in the Apply the Corrosion Resistant Finish (Topcoat) procedure.

(c) Repair fasteners with metal seal covers.
1) Use a sealant cutting tool to cut around and below the metal seal cover and to move the sealant apart from the structure.
2) Hold the metal seal cover with pliers and pull away from the fastener.

   NOTE: This should remove most of the sealant.

3) Cut and remove the remaining sealant.

   NOTE: You do not have to remove small quantities of sealant that bond tightly to the fastener.

4) Clean the metal seal covers, fastener ends, and structure area with cleaning solvent.
5) Apply precoat to the area with BMS 5-45 sealant.

   NOTE: Precoat is optional when you use Pro-Seal 860, B 1/6 sealant, a special adhesion promoter is recommended before the use of Pro-Seal 860, B 1/6 sealant.

   a) Apply the precoat smoothly and equally into all the crevices.
   b) Let the precoat cure until it is not tacky.

      NOTE: It is not necessary to let the precoat cure. But, for the class A-2 precoat if you let the precoat cure for a minimum of 30 minutes the class B-2 sealant will bond better. If the precoat is fully cured make sure you clean the precoat with solvent, Series 93 (AMM 20-30-93/201) before you apply the class B sealant.

6) Fill a metal seal cover, of the correct size and shape, two-thirds full of BMS 5-45 or Pro-Seal 860, B 1/6 sealant with a sealing gun or a clean spatula (Fig. 813).
7) Make sure there is sufficient sealant to be extruded around the base and through the hole in the top of the metal seal cover.
8) Push the sealant in the metal seal cover to make sure there are no holes left.

BOEING PROPRIETARY - Copyright (C) - Unpublished Work - See title page for details.

9) Push the metal seal cover on the fastener until the metal seal cover touches the structure (Fig. 813).
10) Move the extruded sealant around the top of the metal seal cover.
11) Remove unwanted sealant.

NOTE: Use clean cheesecloth to rub the sealant fairing tool.

12) Hold the metal seal cover in position and move the extruded sealant around the base.
    a) Keep the metal seal cover on the center of the fastener.
    b) Do not let the metal seal cover move.
    c) If there is not sufficient clearance with adjacent metal seal covers, structures, or fillet seals, you can remove 25 percent or less of the area around the metal seal cover.
    d) Make sure the metal seal cover has the dimensions shown in Fig. 814.
13) If it is necessary, do this Task: Apply the Corrosion Resistant Finish (Topcoat) (AMM 28-11-00/701).

NOTE: A layer of corrosion resistant finish is necessary only to protect bare (anodized) metal. It is not necessary to apply a layer of corrosion resistant finish on sealant. Corrosion resistant finish can be applied on sealant, but it is not necessary. Usually topcoat is applied to sealant only when it must be applied to protect adjacent bare metal.

S 368-035

(9) Apply an injection seal.

NOTE: You could raise the seal plane to isolate the faulty seal from the fuel as an alternative to a new injection seal.

(a) Make sure you have these tools: pipe cleaners, a sealant fairing tool, and a sealing gun with an injection nozzle attached.
(b) Make sure the channel is fully clean.
(c) Apply a precoat of BMS 5-45 sealant to the channel surfaces with pipe cleaners or a long, bristled pencil brush.

NOTE: If the channel cross-section is 0.07 inch or less, it is not necessary to apply the precoat.

1) Make sure you do not seal the channel with the precoat of BMS 5-45 sealant.

BOEING PROPRIETARY - Copyright (C) - Unpublished Work - See title page for details.

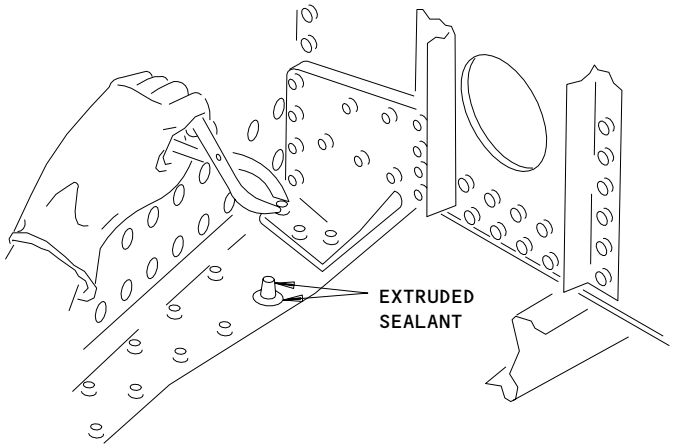

PUSH THE METAL SEAL COVER INTO POSITION

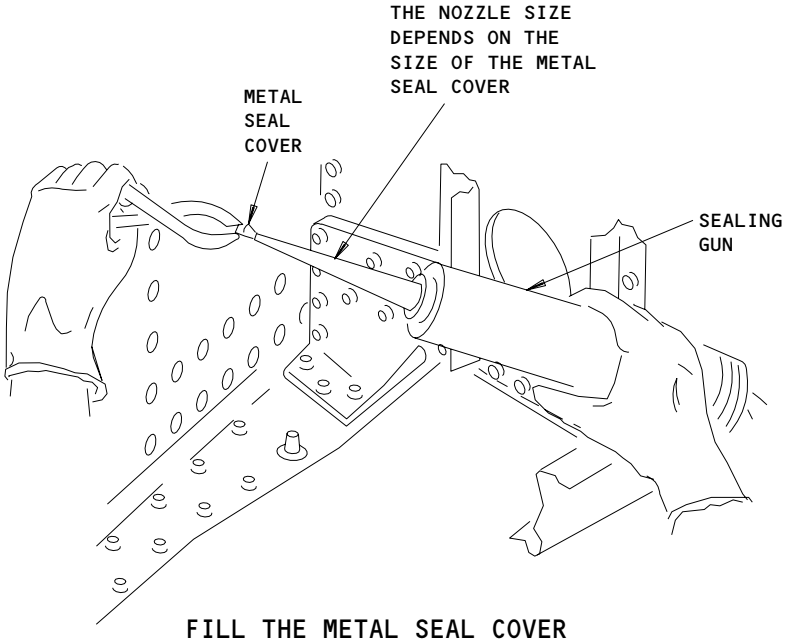

FILL THE METAL SEAL COVER

Metal Seal Cover Installation
Figure 813

BOEING PROPRIETARY - Copyright (C) - Unpublished Work - See title page for details.

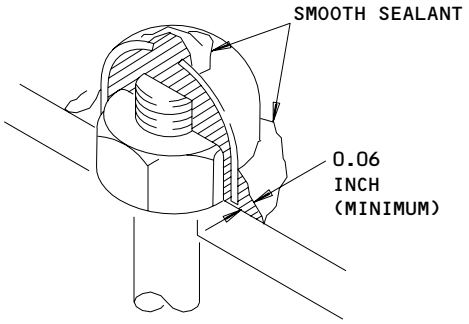

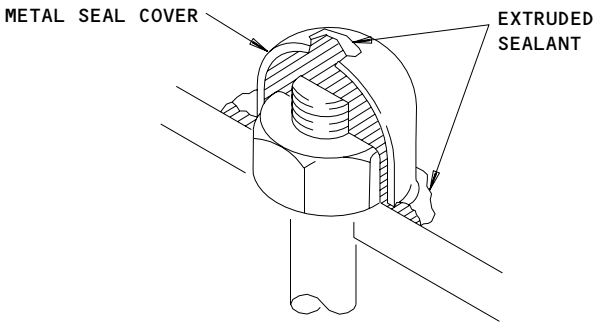

Installed Metal Seal Cover
Figure 814

BOEING PROPRIETARY - Copyright (C) - Unpublished Work - See title page for details.

2) If you seal the channel, it will prevent the flow of the sealant into the channel.

(d) Put BMS 5-45 sealant into one end of the channel and fill until sealant comes out of all other openings (Fig. 815).

(e) Fill all slots, joggles and channels where continuity of a seal or a block-off seal is necessary.

CAUTION: MAKE SURE THERE IS SUFFICIENT SEALANT IN THE SEALING GUN FOR A COMPLETE SEAL. IF YOU STOP AND START WHEN YOU APPLY THE SEAL, AIR BUBBLES CAN GET INTO THE SEAL AND IT WILL NOT BOND CORRECTLY.

(f) Slowly and continuously move the sealant into the area that you apply a fillet seal.

(g) Remove unwanted sealant with the sealant fairing tool.

(h) Make the ends of the seal smooth.

(i) Examine the seal for a bad bond or air bubbles.

1) If the seal has a bad bond or air bubbles, do the procedure again.

(j) If it is necessary, do this Task: Apply the Corrosion Resistant Finish (Topcoat) (AMM 28-11-00/701).

NOTE: A layer of corrosion resistant finish is necessary only to protect bare (anodized) metal. It is not necessary to apply a layer of corrosion resistant finish on sealant. Corrosion resistant finish can be applied on sealant, but it is not necessary. Usually topcoat is applied to sealant only when it must be applied to protect adjacent bare metal.

S 368-036

(10) Apply a prepack seal.

(a) Apply a layer of BMS 5-45 sealant to one of the parts (Fig. 816).

(b) Use a sealant fairing tool to move the sealant such that it is in the shape of the cavity.

(c) Make sure you apply sufficient sealant to completely fill the cavity.

BOEING PROPRIETARY - Copyright (C) - Unpublished Work - See title page for details.

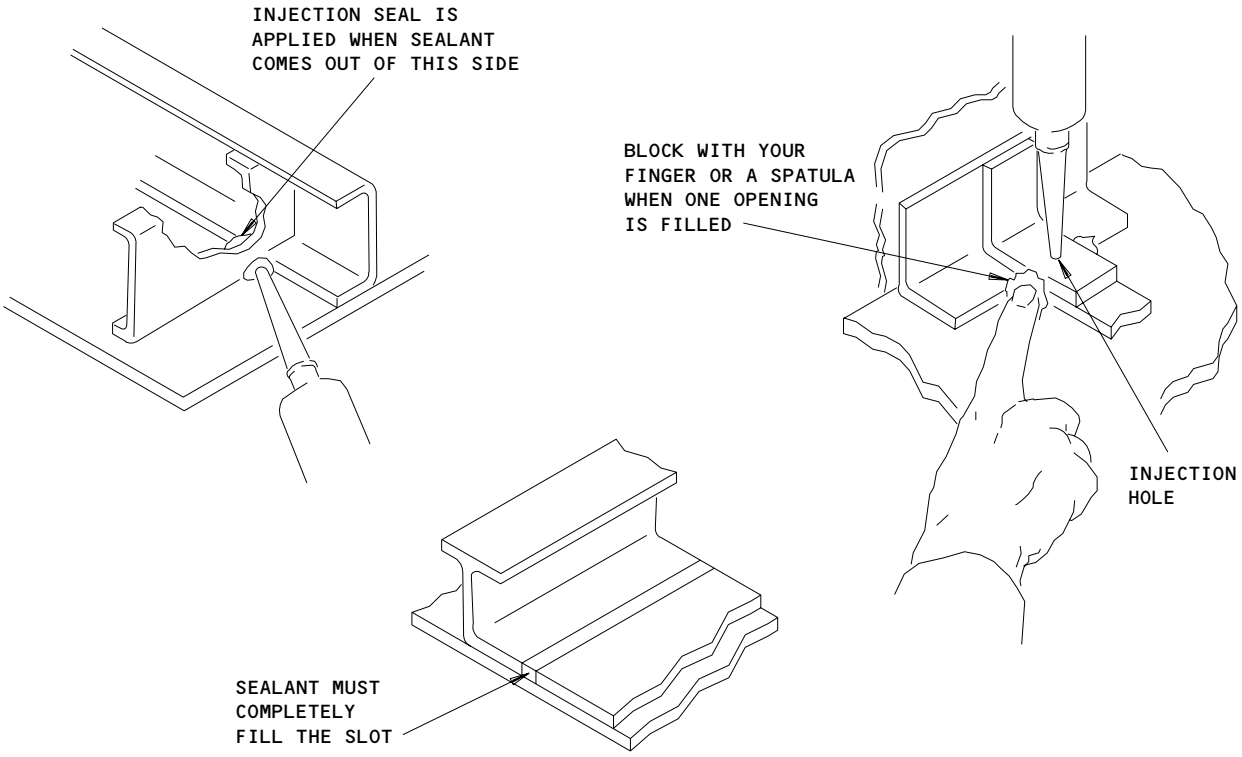

Apply an Injection Seal
Figure 815

BOEING PROPRIETARY - Copyright (C) - Unpublished Work - See title page for details.

(d) Assemble the parts in the sealant usable time (Fig. 804).
(e) If it is necessary, do this Task: Apply the Corrosion Resistant Finish (Topcoat) (AMM 28-11-00/701).

NOTE: A layer of corrosion resistant finish is necessary only to protect bare (anodized) metal. It is not necessary to apply a layer of corrosion resistant finish on sealant. Corrosion resistant finish can be applied on sealant, but it is not necessary. Usually topcoat is applied to sealant only when it must be applied to protect adjacent bare metal.

S 368-037
(11) Apply a faying surface seal.
(a) Apply a layer of BMS 5-45 sealant to one faying surface with a sealing gun or spatula (Fig. 802, Fig. 817).
(b) Move the sealant on all of the surface to get an equal layer approximately 0.03 inch thick (Fig. 817).
(c) Assemble the parts in the sealant usable time.
(d) Make the extruded sealant smooth along the joint.

NOTE: You must apply sufficient sealant to make sure there is continous extruded sealant on the two sides of the joint.

(e) If it is necessary, do this Task: Apply the Corrosion Resistant Finish (Topcoat) (AMM 28-11-00/701).

NOTE: A layer of corrosion resistant finish is necessary only to protect bare (anodized) metal. It is not necessary to apply a layer of corrosion resistant finish on sealant. Corrosion resistant finish can be applied on sealant, but it is not necessary. Usually topcoat is applied to sealant only when it must be applied to protect adjacent bare metal.

S 368-038
(12) Raise the seal plane (Fig. 818).
(a) You can replace an injection, prepack, or faying surface seal, or you can raise the seal plane to isolate a bad seal from the fuel.

NOTE: Because you add a large quantity of sealant when you raise the seal plane, it is better to replace the bad seal.

1) Examine the structure around the bad seal to find where to raise the seal plane.

BOEING PROPRIETARY - Copyright (C) - Unpublished Work - See title page for details.

2) Apply a new fillet seal around the structure with the applicable seals and fasteners to raise the seal plane.
3) If it is necessary, do this Task: Apply the Corrosion Resistant Finish (Topcoat) (AMM 28-11-00/701).

H. Put the Airplane Back to Its Usual Condition

S 418-133

(1) Do the task: Fuel Tank Closure (AMM 28-11-00/601).

TASK 28-11-00-308-040

3. Repair of Fuel Tank Corrosion

A. General

(1) To repair fuel tank corrosion, the applicable surfaces in the fuel tank must be cleaned and treated with etchant and alodine. Corrosion resistant finish (topcoat) is then applied to the surfaces to prevent more corrosion. Be careful to clean and treat all corners, crevices and other limited access areas.

B. Consumable Materials

(1) B00184 Cleaning Solvent - BMS 11-7
(2) G00011 Etchant - TEC 361

C. References

(1) AMM 28-11-00/201, Fuel Tanks
(2) AMM 28-11-00/601, Fuel Tanks
(3) AMM 28-11-00/701, Fuel Tanks
(4) SRM 51-20-01, Protective Treatment of Metallic and Graphite Materials

D. Access

(1) Location Zones

133	Wing Center Section (Left)
134	Wing Center Section (Right)
531	Center Auxiliary Tank (Left)
532	Main Tank - Inboard of Rib No. 10 (Left)
541	Main Tank - Outboard of Rib No. 10 (Left)
542	Surge Tank (Left)
631	Center Auxiliary Tank (Right)
632	Main Tank - Inboard of Rib No. 10 (Right)
641	Main Tank - Outboard of Rib No. 10 (Right)
642	Surge Tank (Right)

BOEING PROPRIETARY - Copyright (C) - Unpublished Work - See title page for details.

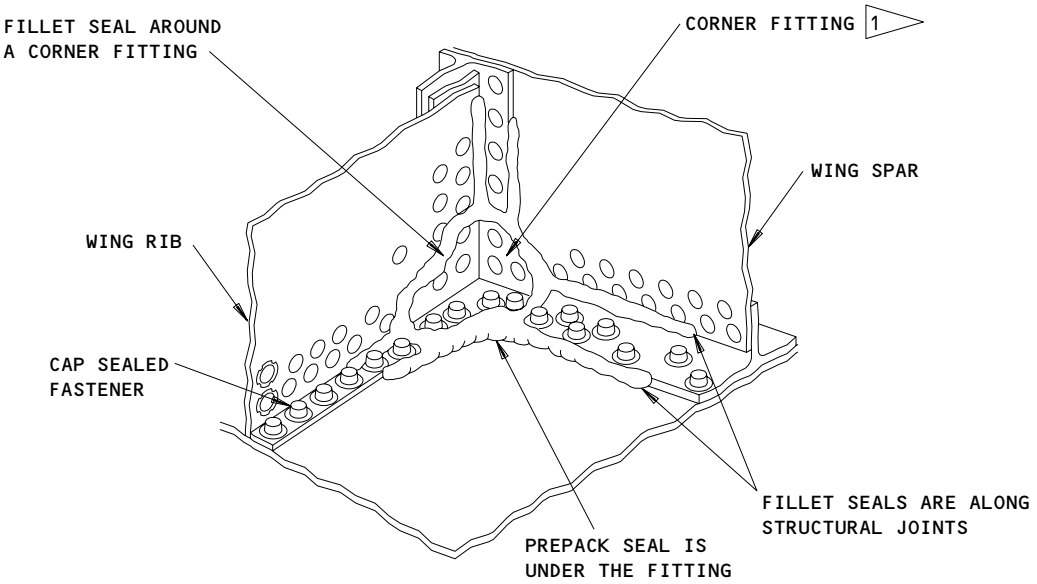

1 THE FITTING MUST BE TEMPORARILY REMOVED AND CLEANED OF USED SEALANT BEFORE YOU APPLY A NEW PREPACK SEAL

Example of a Combination of Prepack Seal and Fillet Seals
Figure 816

BOEING PROPRIETARY - Copyright (C) - Unpublished Work - See title page for details.

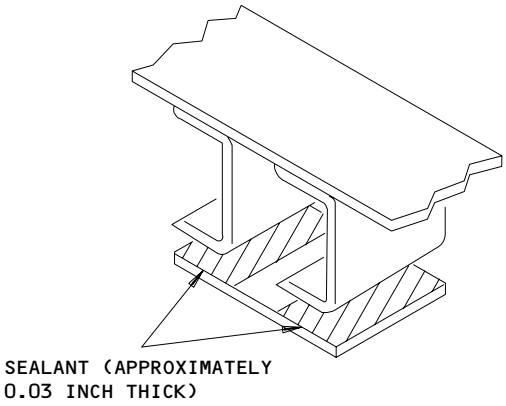

BEFORE ASSEMBLY

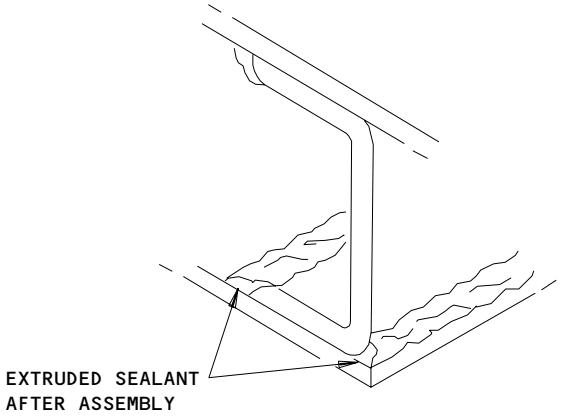

AFTER ASSEMBLY

Faying Surface Seal
Figure 817

BOEING PROPRIETARY - Copyright (C) - Unpublished Work - See title page for details.

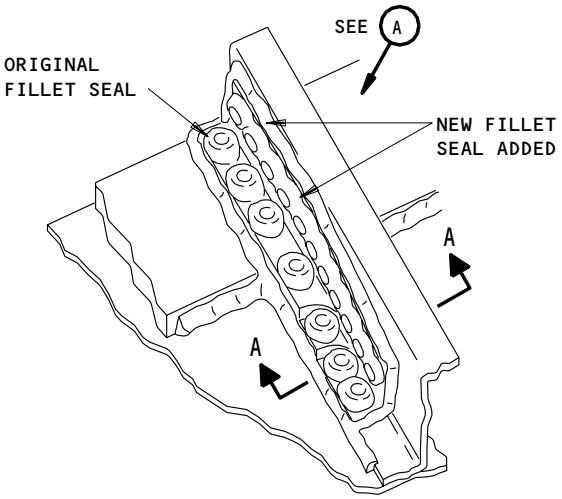

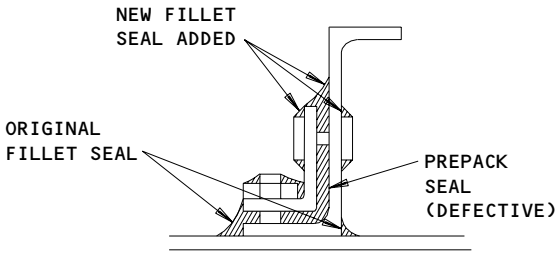

A-A

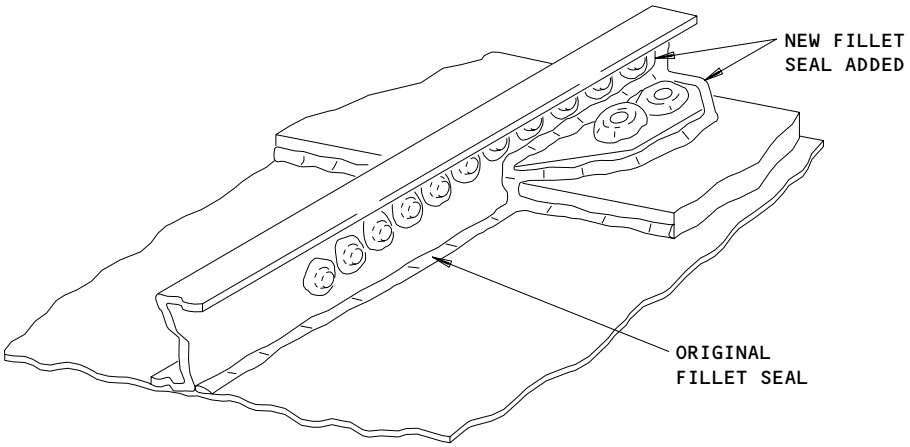

A

Raising the Seal Plane to Repair a Defective Prepack Seal
Figure 818

BOEING PROPRIETARY - Copyright (C) - Unpublished Work - See title page for details.

E. Repair of the Fuel Tank Corrosion

S 948-131

WARNING: OBEY THE PURGING AND FUEL TANK ENTRY PROCEDURE. FAILURE TO OBEY THE PURGING AND FUEL TANK ENTRY PROCEDURE COULD CAUSE INJURY TO PERSONS OR DAMAGE TO EQUIPMENT.

(1) Do this task: Purging and Fuel Tank Entry (AMM 28-11-00/201).

S 218-129

CAUTION: REFER TO THE STRUCTURAL REPAIR MANUAL TO CALCULATE IF THE STRUCTURE IS WEAK. CORROSION CAN MAKE THE STRUCTURE WEAK.

(2) Look for corrosion on all structural surfaces of the fuel tank.

S 118-041
(3) Clean the fuel tank surfaces that have corrosion with BMS 11-7 solvent.

S 158-042
(4) Apply etchant on the cleaned fuel tank surfaces with corrosion.

S 158-043
(5) Keep the etchant on the fuel tank surfaces for 3 to 5 minutes.

S 178-044
(6) Flush the surface with water.

S 378-132

CAUTION: USE ONLY ALODINE 600 TO REPAIR ALUMINUM WING SURFACES. PRIMER ADHESION PROBLEMS CAN OCCUR IF OTHER ALODINE SOLUTIONS ARE USED.

(7) Apply an alodine layer to the surface with Alodine 600 (SRM 51-20-01).

S 398-046
(8) Repair all sealant damaged or removed when you remove corrosion.

NOTE: Follow the procedure in the Repair of Sealant Leaks in the Fuel Tank Structure paragraph.

S 378-047
(9) Do this task: Apply the Corrosion Resistant Finish (Topcoat) (AMM 28-11-00/701).

BOEING PROPRIETARY - Copyright (C) - Unpublished Work - See title page for details.

S 868-130
(10) Do the Fuel Tank Close procedure (AMM 28-11-00/601).

TASK 28-11-00-308-057

4. Approved Repairs of Nonsealant Leaks

A. General

(1) Nonsealant leaks are leaks around plumbing fittings that you can remove, primary tension bolts, tank access doors and fuel system components that go through the fuel tank surfaces. These components are sealed by O-rings or by molded rubber seals. Replace the O-rings or molded rubber seals when they are damaged or fuel leaks through them. You must realodize all surfaces of the tank structure that are damaged before you install new O-rings or molded rubber seals.

B. References

(1) AMM 20-10-19/401, O-rings

C. Access

(1) Location Zones

133	Wing Center Section (Left)
134	Wing Center Section (Right)
531	Center Auxiliary Tank (Left)
532	Main Tank - Inboard of Rib No. 10 (Left)
541	Main Tank - Outboard of Rib No. 10 (Left)
542	Surge Tank (Left)
631	Center Auxiliary Tank (Right)
632	Main Tank - Inboard of Rib No. 10 (Right)
641	Main Tank - Outboard of Rib No. 10 (Right)
642	Surge Tank (Right)

D. Repair of Nonsealant Leaks

S 968-058
(1) If the molded rubber seal on a tank access door leaks, replace the tank access door.

S 968-059
(2) If an O-ring on a fuel system component leaks, do the steps that follow to replace the O-ring:
(a) Get the correct replacement O-ring.

BOEING PROPRIETARY - Copyright (C) - Unpublished Work - See title page for details.

(b) Make sure the cure date of the replacement O-ring is less than 48 months ago.
(c) Remove the used O-ring from the component.

WARNING: DO NOT GET SOLVENTS IN YOUR MOUTH, OR YOUR EYES, OR ON YOUR SKIN. DO NOT BREATHE THE FUMES FROM SOLVENTS. SOLVENTS ARE HAZARDOUS MATERIALS. SOLVENTS MAY BE FLAMMABLE OR HARMFUL TO THE ENVIRONMENT. REFER TO PRODUCT MATERIAL SAFETY DATA SHEETS (MSDS) AND LOCAL REQUIREMENTS FOR PROPER HANDLING PROCEDURES.

(d) Clean the O-ring groove and the flat surfaces that the O-ring is between with MEK, Acetone, isopropyl alcohol, or ethyl alcohol.
(e) Rub the surfaces dry with the clean gauze.
(f) Examine the O-ring groove and the adjacent fuel surface for cuts, scratches, dents, distortions, and unwanted material.
(g) Repair or replace all bad components.
(h) Examine the new O-ring for defects.
(i) Discard the O-ring if it is bad.
(j) Make a mark on the component that you install the O-ring on of the cure date.
(k) Make sure the O-ring fits in the groove.
(l) Install the O-ring (AMM 20-10-19/401).
(m) Assemble the component.

TASK 28-11-00-308-060

5. Approved Repair of the Secondary Fuel Barrier Sealant

A. General
(1) If there is leakage in the secondary fuel barrier, the leakage must be repaired before the airplane is released for flight.
(2) Secondary fuel barrier sealant is a polyurethane (Type II) material applied to the upper exterior surface of center auxiliary fuel tank.

B. Equipment
(1) Brush - Paint

BOEING PROPRIETARY - Copyright (C) - Unpublished Work - See title page for details.

(2) Instrument - Dualscope Thickness Measurement, Model MP20
9U437 Fischer Technology Inc.
750 Marshall Phelps Road, Windsor CT 06095-2199
(3) Probe - Thickness Measurement, Pencil - Type, Model ETA3.3H
9U437 Fischer Technology Inc.
750 Marshall Phelps Road, Windsor CT 06095-2199

C. Consumable Materials
(1) G02088 Abrasive, silicon carbide, waterproof paper - P-P-101
(2) G00034 Cotton Wiper, Process Cleaning Absorbent Wiper (cheesecloth, gauze)-BMS15-5
(3) B00184 Cleaning Solvent - BMS 11-7
(4) C00259 Primer - BMS 10-11, Type I (yellow)
(5) A00015 Sealant, secondary fuel barrier - BMS 5-81, Type II
(6) A00767 Sealant, Integral Fuel Tank BMS5-45
(7) G00215 Flat, bristle brush

D. References
(1) AMM 51-21-02/701, Prepaint Cleaning and Treatment

E. Access
(1) Location Zones

133	Wing Center Section (Left)
134	Wing Center Section (Right)
531	Center Auxiliary Tank (Left)
532	Main Tank - Inboard of Rib No. 10 (Left)
541	Main Tank - Outboard of Rib No. 10 (Left)
542	Surge Tank (Left)
631	Center Auxiliary Tank (Right)
632	Main Tank - Inboard of Rib No. 10 (Right)
641	Main Tank - Outboard of Rib No. 10 (Right)
642	Surge Tank (Right)

F. Repair of the Secondary Fuel Barrier Sealant

S 128-061
(1) Lightly sand the damaged area with, 180 grit or finer, abrasive paper.

NOTE: Do not sand to the bare metal if possible.

S 118-062

CAUTION: THOROUGHLY CLEAN THE FUEL TANK AREA AFTER YOU USE ABRASIVE MATERIALS IN MAINTENANCE OPERATIONS. DAMAGE TO THE PUMPS AND OTHER EQUIPMENT CAN OCCUR IF THE FUEL TANK AREA IS NOT CLEAN.

(2) Remove all contamination with a clean cotton wiper (BMS15-5) soaked with BMS 11-7 cleaning solvent.

BOEING PROPRIETARY - Copyright (C) - Unpublished Work - See title page for details.

S 168-063
(3) Rub the area dry with a clean, dry cotton wiper (BMS15-5).

S 378-064
(4) Refinish all bare metal (AMM 51-21-02/701).

S 378-135
(5) Apply sealant, BMS5-45 to make areas smooth that have sharp edges.

S 378-065
(6) Apply the primer BMS 10-11, Type I (yellow) until it makes an overlap with the adjacent area that is not damaged.

S 398-066
(7) Let the primer dry for 30 minutes to 4 hours before applying BMS/5-81.

S 368-067
(8) Prepare the secondary fuel barrier sealant (BMS 5-81, Type II) as follows:
(a) Make sure the base and accelerator are each homogeneous, free from lumps or gelled particles.
(b) Make sure the base component is clear. If the base component becomes cloudy, do these steps:
1) Heat the material in an oven at a temperature between 120 and 130 degrees F for 60 - 70 minutes.
2) At the end of the exposure time, take the material out of the oven.
3) Let the material cool to a temperature between 60 and 80 degrees F before you use it.
4) At any time when a base container is opened, purge it with dry nitrogen before you close it.

NOTE: Purging with dry nitrogen prevents cloudiness in the the base.

CAUTION: BE CAREFUL WHEN YOU MIX AND MAKE THE SEALANT SMOOTH TO KEEP AIR BUBBLES TO A MINIMUM. AIR BUBBLES CAN MAKE THE SEALANT DIFFICULT TO APPLY.

(c) Before you mix the sealant, stir each component in its container to make sure each is homogeneous.

BOEING PROPRIETARY - Copyright (C) - Unpublished Work - See title page for details.

(d) Carefully mix the total contents of the base and accelerator containers or mix at a measured ratio of 100 parts of base to 90 parts of accelerator by weight or by volume.

NOTE: The material is normally supplied in premeasured kits to give the correct ratio.

(e) Stir slowly until you get a homogeneous mixture.

S 398-068

WARNING: DO NOT BREATHE THE FUMES FROM THE SECONDARY FUEL BARRIER SEALANT (BMS 5-81, TYPE II). KEEP THE SEALANT AWAY FROM SPARKS, FLAME OR HEAT. THE SEALANT IS POISONOUS AND FLAMMABLE AND CAN CAUSE INJURY TO PERSONS OR DAMAGE TO EQUIPMENT.

CAUTION: DO NOT APPLY THE SECONDARY FUEL BARRIER SEALANT (BMS 5-81, TYPE II IF THE AIR TEMPERATURE IS LESS THAN 60°F (15°C) OR THE RELATIVE HUMIDITY IS MORE THAN 95 PERCENT. THE SEALANT WILL NOT CURE CORRECTLY IF THE TEMPERATURE AND RELATIVE HUMIDITY CONDITIONS ARE NOT IN THE LIMITS.

(9) Apply two layers of BMS 5-81, Type II sealant with a flat, bristle brush.

NOTE: At 77 +/- 5 degree F (25 +/- 2.8C) and 50 +/- 5 percent relative humidity, the approximate application time of sealant, BMS5-81 Type II, Class I is 120 minutes. The approximate application time of sealant, BMS5-81, Type II, Class 2 is 30 minutes. Higher temperatures make the application time shorter. Lower temperatures make the application time longer.

CAUTION: DO NOT PERMIT THE THICKNESS OF THE APPLIED SEALANT TO BE MORE THAN 0.020 INCHES (0.5MM). DAMAGE TO EQUIPMENT CAN OCCUR.

(a) Make sure the total thickness of the two layers of applied sealant is 0.005 to 0.010 inch (0.13mm to 0.25mm).
(b) For horizontal surfaces, let the sealant dry a minimum of 1/2 hour between layers.
(c) For vertical surfaces, let the sealant dry a minimum of 2 hours between layers.

BOEING PROPRIETARY - Copyright (C) - Unpublished Work - See title page for details.

(d) THICKNESS MEASUREMENT INSTRUMENT, 602-816 AND THICKNESS MEASUREMENT PROBE, 602-128 can be used to make sure the sealant has the correct thickness.

S 398-069

(10) Cure the sealant.

(a) The cure rates of the sealant are as follows:

NOTE: A cure temperature of more than 80°F (26.7°C) is recommended for the best results.

TABLE I BMS 5-81 CURE RATES

CURE TEMPERATURE	CURE CONDITIONS			
	DRY HARD (HOURS) *[1]		DRY THROUGH (HOURS) *[2]	
	TYPE II, CLASS 1	TYPE II, CLASS 2	TYPE II, CLASS 1	TYPE II, CLASS 2
75 ±5°F 23.8 ±2.8°C	50	8	96	24
100 ±5°F 37.8 ±2.8°C	18	2.5	36	3.5
125 ±5°F 51.7 ±2.8°C	7.5	1.5	15	2.5
150 ±5°F 65.6 ±2.8°C	2.5	1.5	5	2

*[1] Condition where metal particles do not bond to the sealant.
*[2] Condition where sealant is sufficiently hard to prevent damage when walked on with boot socks.

TASK 28-11-00-368-070

6. Temporary Repair of Leakage in the Drain Tubes for the Slat Track Housing

A. General

(1) The slat track housing goes through the front spar at nine locations in each wing. A drain tube is attached to the slat track housing in the main fuel tank to permit collected fluids to fall out of the slat track housing. The opening of the drain tube is in the bottom surface of the wing behind the front spar (Fig. 819). This task gives a temporary repair of fuel leakage in the drain tube. You can use this temporary repair until you can do a permanent repair of the drain tube.

BOEING PROPRIETARY - Copyright (C) - Unpublished Work - See title page for details.

B. Equipment
(1) Tubing - flexible, plastic (tygon), with an outer diameter of 0.375 inches, a minimum inner diameter of 0.25 inches, to make the sealing tube shown in Fig. 820. The tubing can be purchased from:

SAINT GOBIN PERFORMANCE PLASTICS
2664 Gilchrist RD
Akron, OH, 44305, USA

Phone: (800) 798-1554, or (330) 798-9240
FAX: (800) 488-9466
Web Access: www.tygon.com

Part Number: AAG00017 for Tygon F4040A Tubing or equivalent

(2) Pipe cleaner - to clean the inner surface of the drain tube
(3) Hose clamp

C. Consumable Materials
(1) A00706 - PR1826 Sealant, B-1/2 integral fuel tank
(2) B00148 - Solvent, Methyl Ethyl Ketone

D. References
(1) AMM 12-11-01/301, Pressure Fueling
(2) AMM 28-11-00/201, Fuel Tanks
(3) AMM 28-11-11/401, Slat Track Drain Tube
(4) AMM 28-26-00/201, Defueling

E. Access
(1) Location Zones
532 Main Tank - Inboard of Rib No. 10 (Left)
541 Main Tank - Outboard of Rib No. 10 (Left)
641 Main Tank - Inboard of Rib No. 10 (Right)
642 Main Tank - Outboard of Rib No. 10 (Right)

F. Procedure

S 658-071
(1) Defuel the applicable fuel tank to a level below the bottom of the applicable drain tube (AMM 28-26-00/201).

NOTE: The fuel quantities necessary to cover each access door for the main fuel tanks is given in AMM 28-11-00/201 in this task: "Fuel Tank Leak Detection".

BOEING PROPRIETARY - Copyright (C) - Unpublished Work - See title page for details.

S 118-072

WARNING: DO NOT GET SOLVENTS IN YOUR MOUTH, OR YOUR EYES, OR ON YOUR SKIN. DO NOT BREATHE THE FUMES FROM SOLVENTS. SOLVENTS ARE HAZARDOUS MATERIALS. SOLVENTS MAY BE FLAMMABLE OR HARMFUL TO THE ENVIRONMENT. REFER TO PRODUCT MATERIAL SAFETY DATA SHEETS (MSDS) AND LOCAL REQUIREMENTS FOR PROPER HANDLING PROCEDURES.

(2) Clean the inner surface of the drain tube with MEK, Acetone, ethyl alcohol, or isopropyl alcohol and a dry cotton wiper (BMS15-5).
  (a) It is necessary to go into the wing dry bay to get access to the end of the drain tube.

S 368-091
(3) Refer to Fig. 820 to prepare the special repair tube with the tygon tubing.
  (a) Melt one end of the tygon tubing to seal it.
    1) Form the tube into a cone shape when you seal it.
  (b) Put holes in the tygon tubing at the applicable location for the drain tube with the leak (Table A).
    1) Put one hole for every 0.10 square inch of external tube surface.

S 368-092
(4) Fill a sealant tube with PR 1826, B-1/2 sealant.

S 368-093
(5) Cut the end of the nozzle on the tube of sealant to put it easily into the open end of the special repair tube that you prepared.

S 368-094
(6) Put the sealant nozzle into the open end of the repair tube.

S 368-095
(7) Tighten the hose clamp to attach the sealant nozzle to the special repair tube.

S 368-096
(8) Inject the sealant into the special repair tube until sealant starts to come out of the holes (perforations).

S 368-097
(9) Put the sealant repair tube into the slat drain tube until the hose clamp touches the flange for the slat drain tube in the bottom of the wing.

S 368-098
(10) Pump the seal gun until the sealant seeps from the lower wing skin.

BOEING PROPRIETARY - Copyright (C) - Unpublished Work - See title page for details.

S 368-102
(11) Turn the repair tube 360 degrees (one full turn) in the drain tube.

S 368-103
(12) Pump the sealant gun one more time.

S 368-099
(13) Hold the special repair tube in the drain tube for 10 minutes more than the application time (working life) of the sealant.

NOTE: For example, hold the repair tube in the drain tube for 40 minutes if you use PR1826 B-1/2 sealant.

S 368-100
(14) Remove the special repair tube from the slat drain tube with a turning motion.

S 398-075
(15) Permit the sealant to dry for the applicable curing time (Fig. 804).

NOTE: Do not put more fuel in the tank until after the applicable curing time (3 hours for PR1826 B - 1/2).

S 658-076
(16) Refuel the applicable fuel tank (AMM 12-11-01/301).

S 218-078

CAUTION: MAKE SURE THE FLEXIBLE TUBE IS OPEN TO A MINIMUM DIAMETER OF 0.25 INCHES ALONG THE FULL LENGTH OF THE TUBE. FLUID WILL COLLECT IN THE SLAT AND CAUSE DAMAGE IF THE DRAINAGE IS NOT SUFFICIENT.

(17) Carefully put a flexible piece of tygon tubing (0.25 inch maximum outer diameter) through the repaired part of the tube to make sure the tube is not blocked with sealant.

S 218-101
(18) Examine the drain tube opening to make sure there is no more fuel leakage.

S 418-126
(19) For the inboard drain tube, if the dry bay access door was removed to get access, install the dry bay access door.

BOEING PROPRIETARY - Copyright (C) - Unpublished Work - See title page for details.

S 398-088

(20) It is recommended that the drain tube be replaced with the newest available replacement part to make a permanent repair at the next scheduled maintenance (AMM 28-11-11/401).

BOEING PROPRIETARY - Copyright (C) - Unpublished Work - See title page for details.

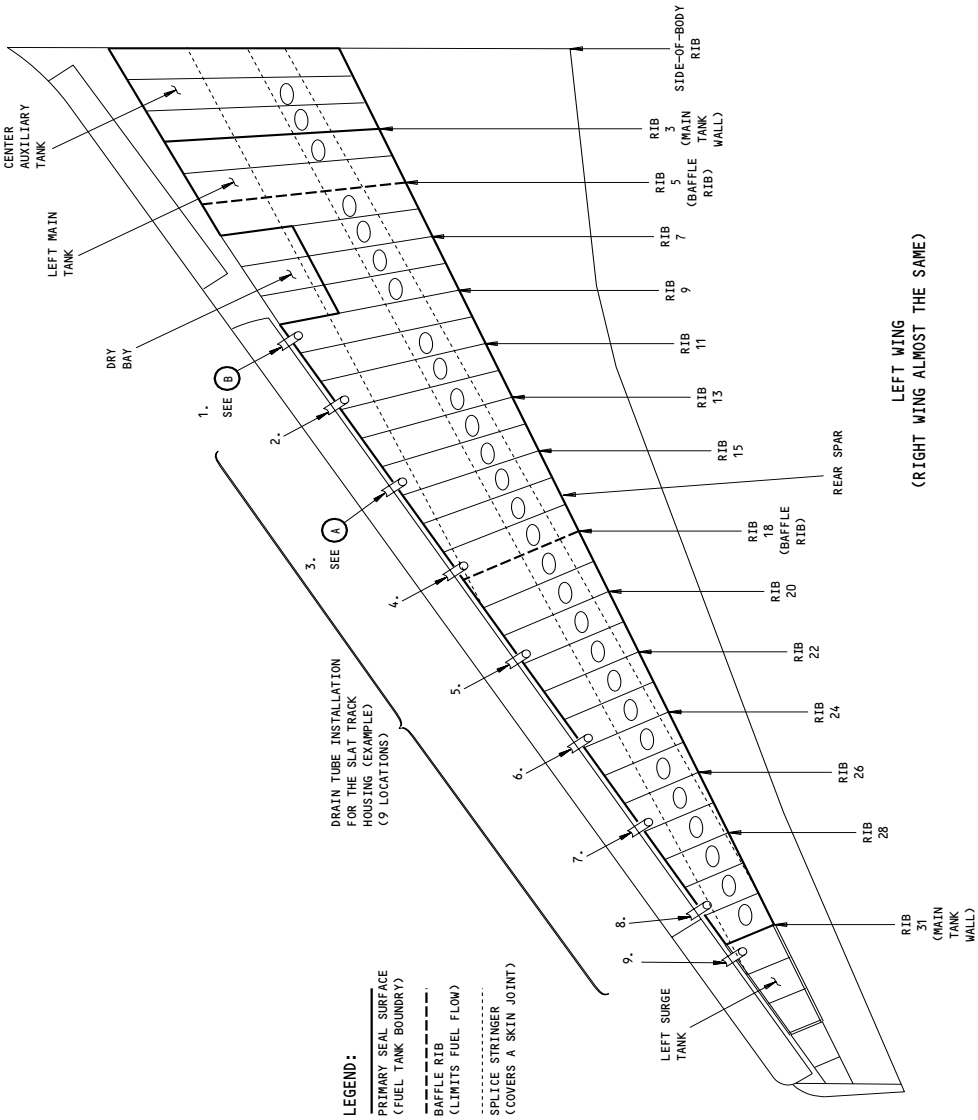

Drain Tube Installations for the Slat Track Housing
Figure 819 (Sheet 1)

C12489

BOEING PROPRIETARY - Copyright (C) - Unpublished Work - See title page for details.

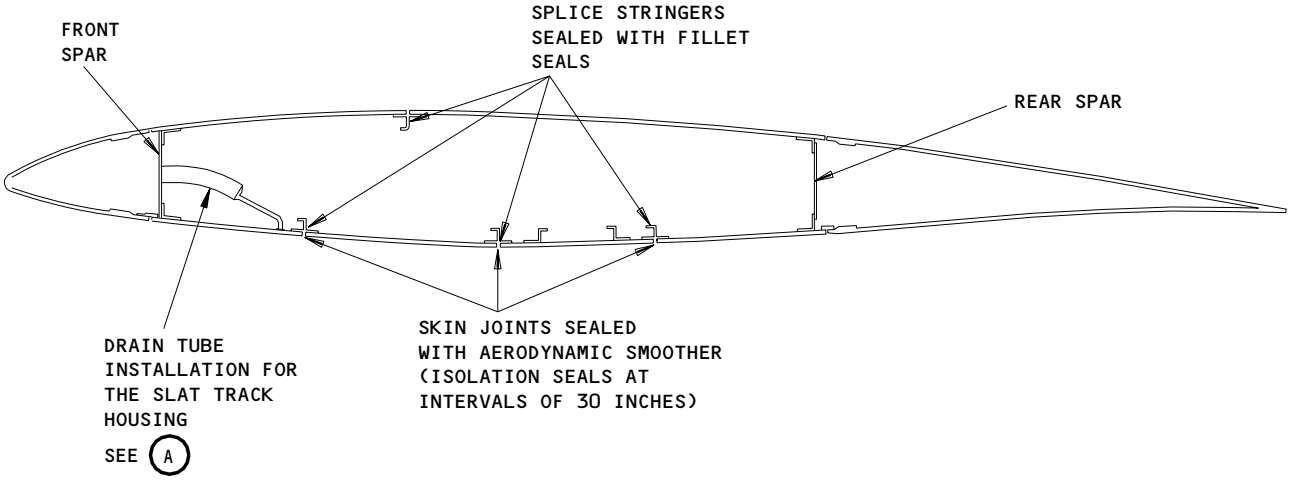

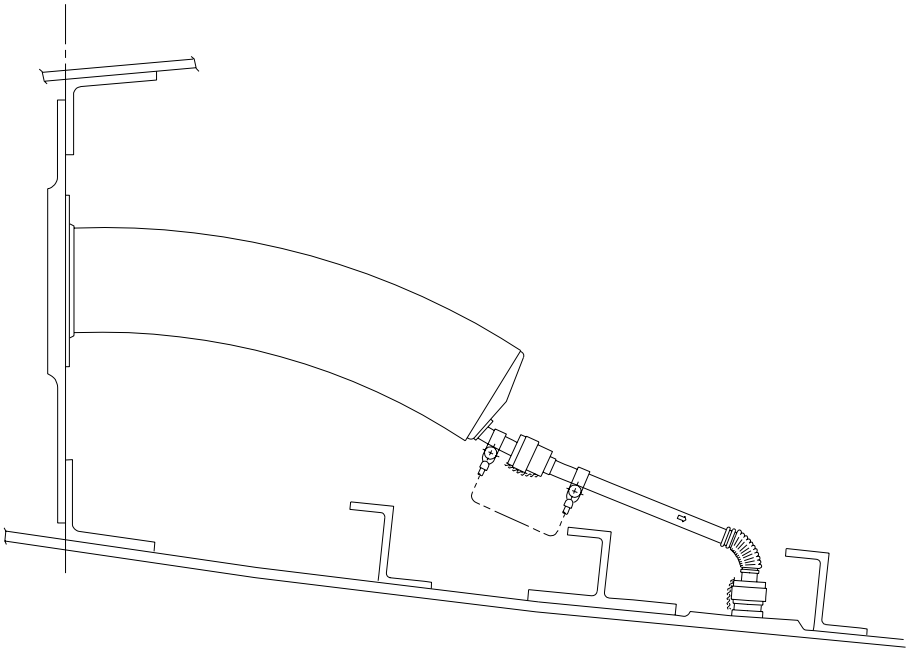

DRAIN TUBE INSTALLATION FOR THE SLAT TRACK HOUSING

A

Drain Tube Installations for the Slat Track Housing
Figure 819 (Sheet 2)

BOEING PROPRIETARY - Copyright (C) - Unpublished Work - See title page for details.

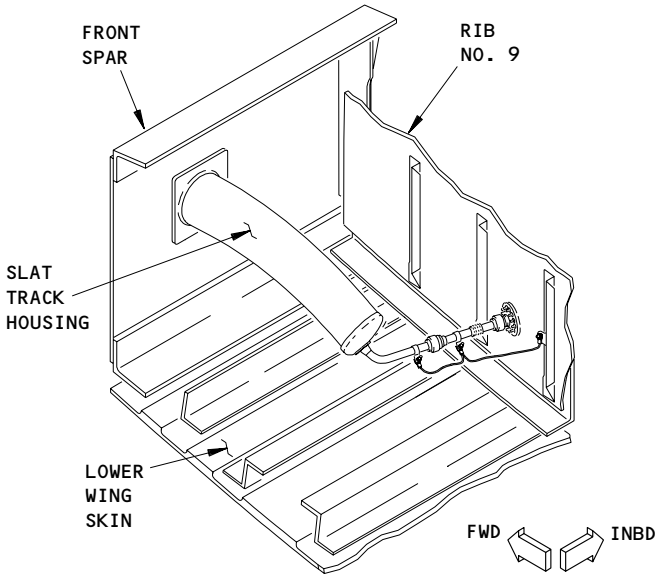

DRAIN TUBE INSTALLATION NO. 1

B

Drain Tube Installations for the Slat Track Housing
Figure 819 (Sheet 3)

BOEING PROPRIETARY - Copyright (C) - Unpublished Work - See title page for details.

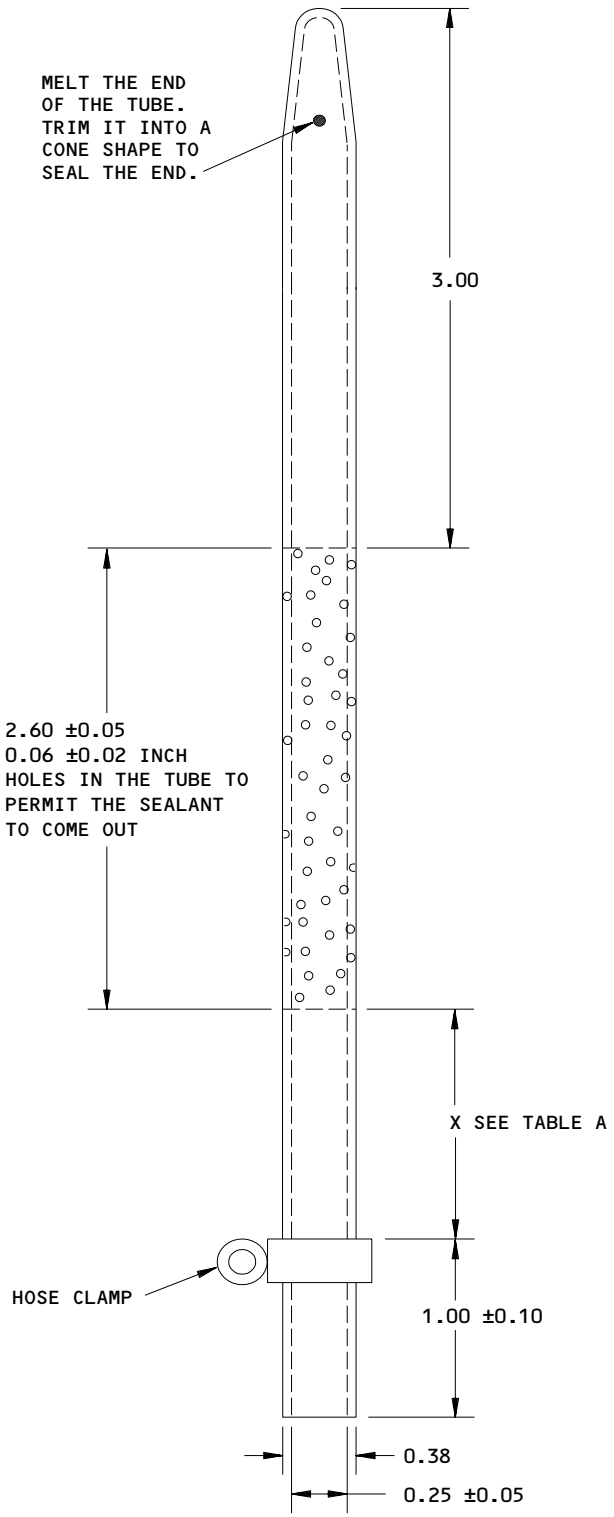

SLAT DRAIN TUBE NUMBER (FIG. 819)	X ±0.05 INCHES
1.	1.57
2.	1.57
3.	1.57
4.	1.57
5.	1.41
6.	1.41
7.	1.30
8.	1.30
9.	1.30

TABLE A

NOTE: ALL DIMENSIONS ARE IN INCHES

Temporary Repair Tool for Fuel Leakage
in the Slat Track Housing
Figure 820

BOEING PROPRIETARY - Copyright (C) - Unpublished Work - See title page for details.

MAIN TANK ACCESS DOOR - REMOVAL/INSTALLATION

1. General
   A. Each main fuel tank has 25 elliptical access doors found on the lower wing surface (AMM 06-44-00/201, Wing Access Doors and Panels).
      (1) Each main tank access door is 10 x 18 inches in size; this does not include the subsequent main tank access doors which are 8 x 18 inches:

LEFT WING	RIGHT WING
541XB	641XB
541WB	641WB

      (2) These main tank access doors have fuel measuring sticks attached to the inner surface:

LEFT WING	RIGHT WING
541VB	641VB
541TB	641TB
541PB	641PB
541LB	641LB
541GB	641GB
541BB	641BB

   B. This procedure contains two tasks. The first task removes the main tank access door. The second task installs the main tank access door.
   C. BMS 3-38 is now the preferred anti-corrosion compound for access door gasket installations. BMS 3-38 provides an anti-corrosion compound, Cor-Ban 27L, with improved corrosion protection between the access door, mesh gasket and wing surfaces. Anti-corrosion grease, MIL-G-25537, can still be used for access door gaskets, but should be replaced with BMS 3-38 as soon as practical.

BOEING PROPRIETARY - Copyright (C) - Unpublished Work - See title page for details.

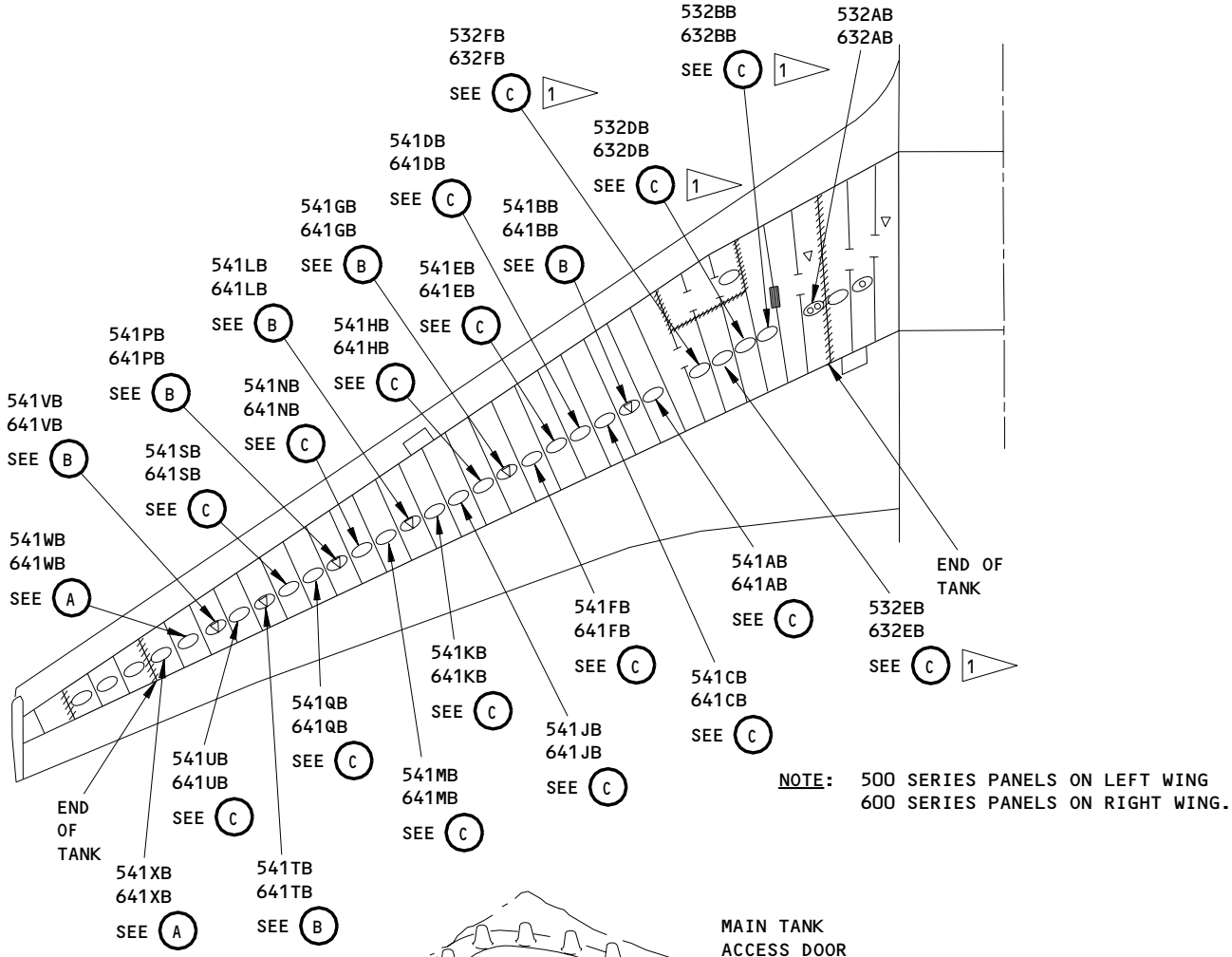

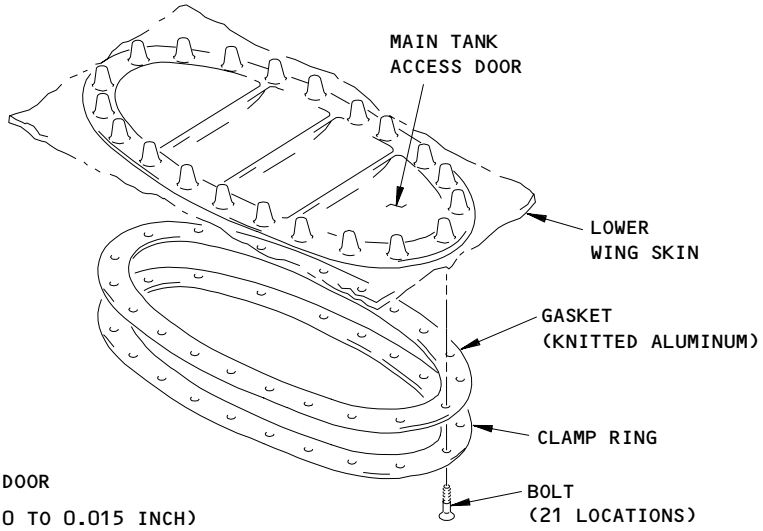

1 IMPACT RESISTANT ACCESS DOOR

2 APPLY A THIN LAYER (0.010 TO 0.015 INCH) OF ANTI-CORROSION COMPOUND TO THE LOWER SURFACE OF THE WING SKIN THAT TOUCHES THE ALUMINUM GASKET. (REFER TO THE TEXT)

A

Main Tank Access Door Installation
Figure 401 (Sheet 1)

BOEING PROPRIETARY - Copyright (C) - Unpublished Work - See title page for details.

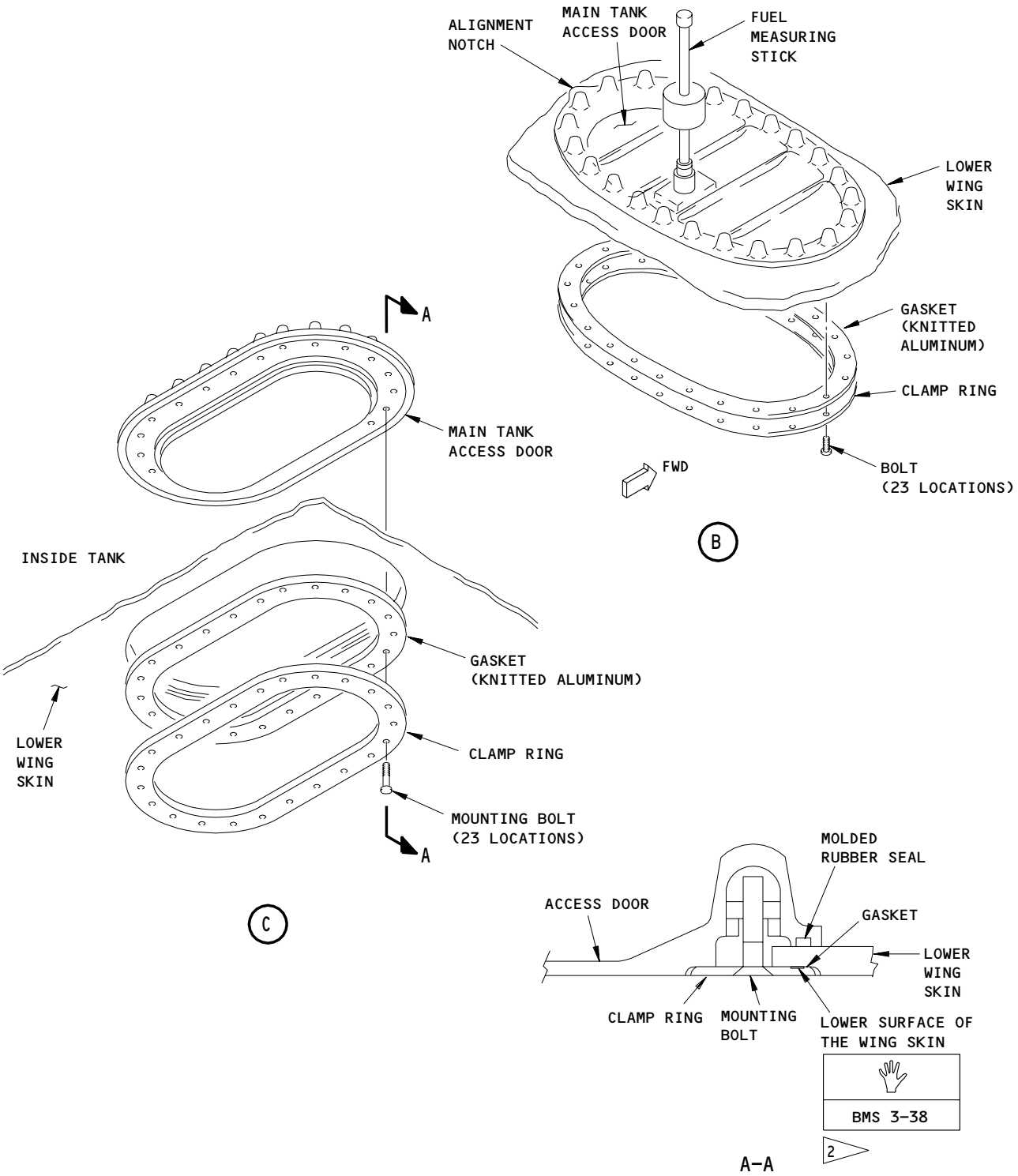

Main Tank Access Door Installation
Figure 401 (Sheet 2)

BOEING PROPRIETARY - Copyright (C) - Unpublished Work - See title page for details.

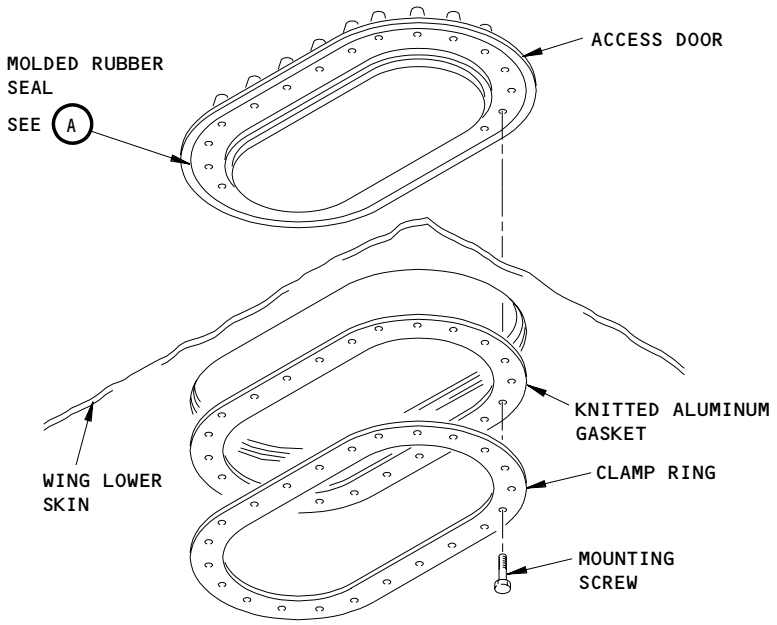

FUEL TANK ACCESS DOOR

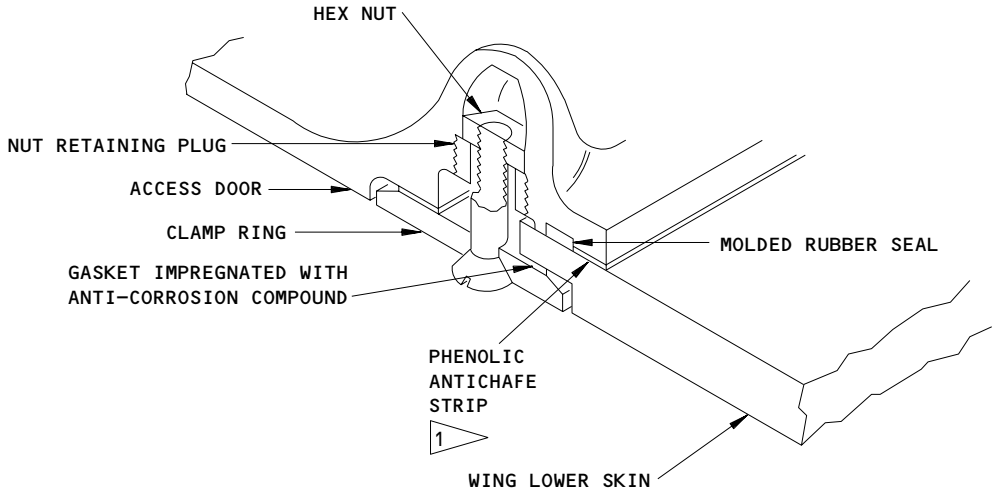

MOLDED RUBBER SEAL

A

1 NOT INSTALLED ON MOLDED ALUMINUM HONEYCOMB DOOR

Fuel Tank High Impact Access Door Repair
Figure 402

BOEING PROPRIETARY - Copyright (C) - Unpublished Work - See title page for details.

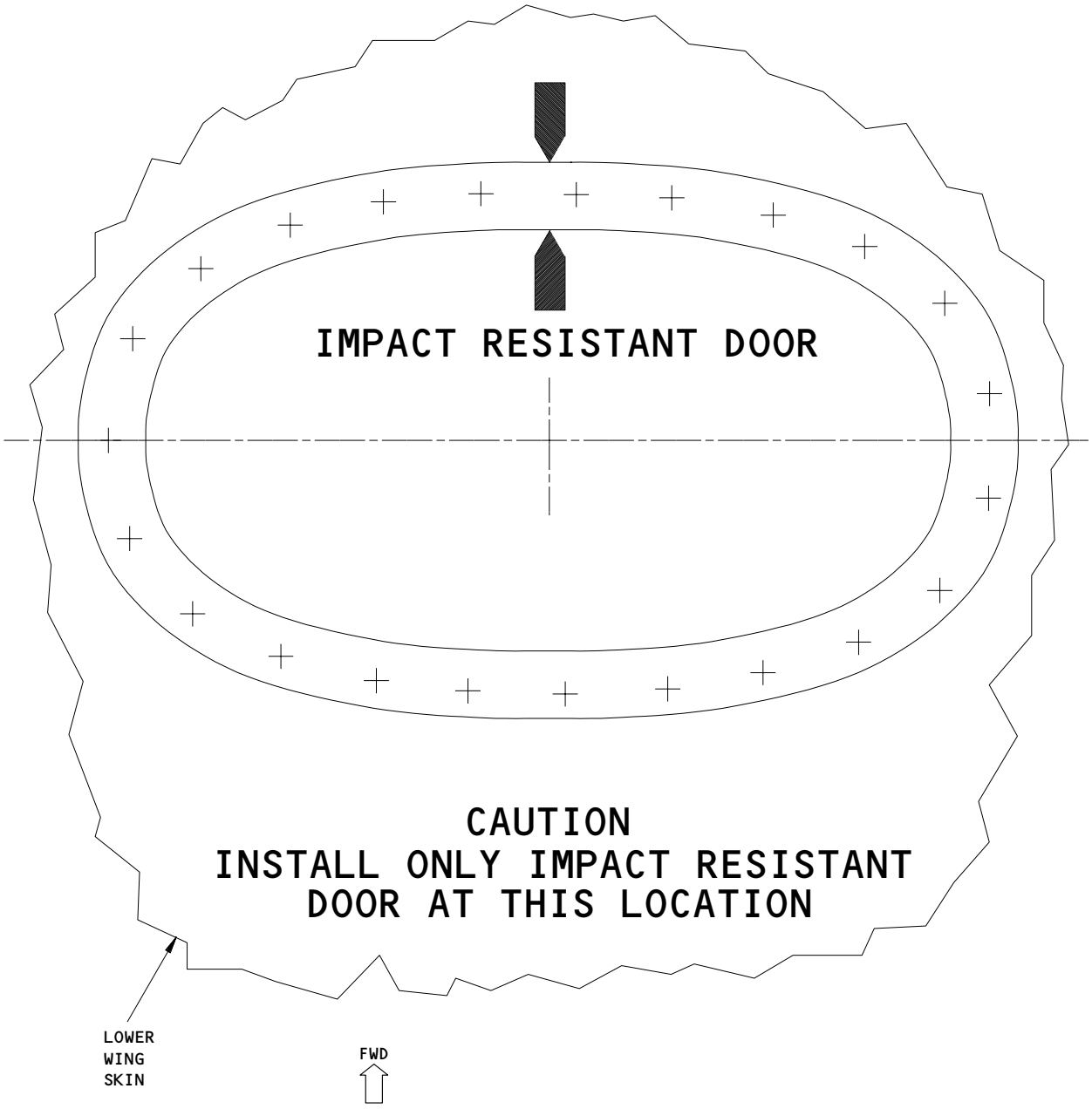

Identification of Impact Resistant Access Doors
Figure 403

BOEING PROPRIETARY - Copyright (C) - Unpublished Work - See title page for details.

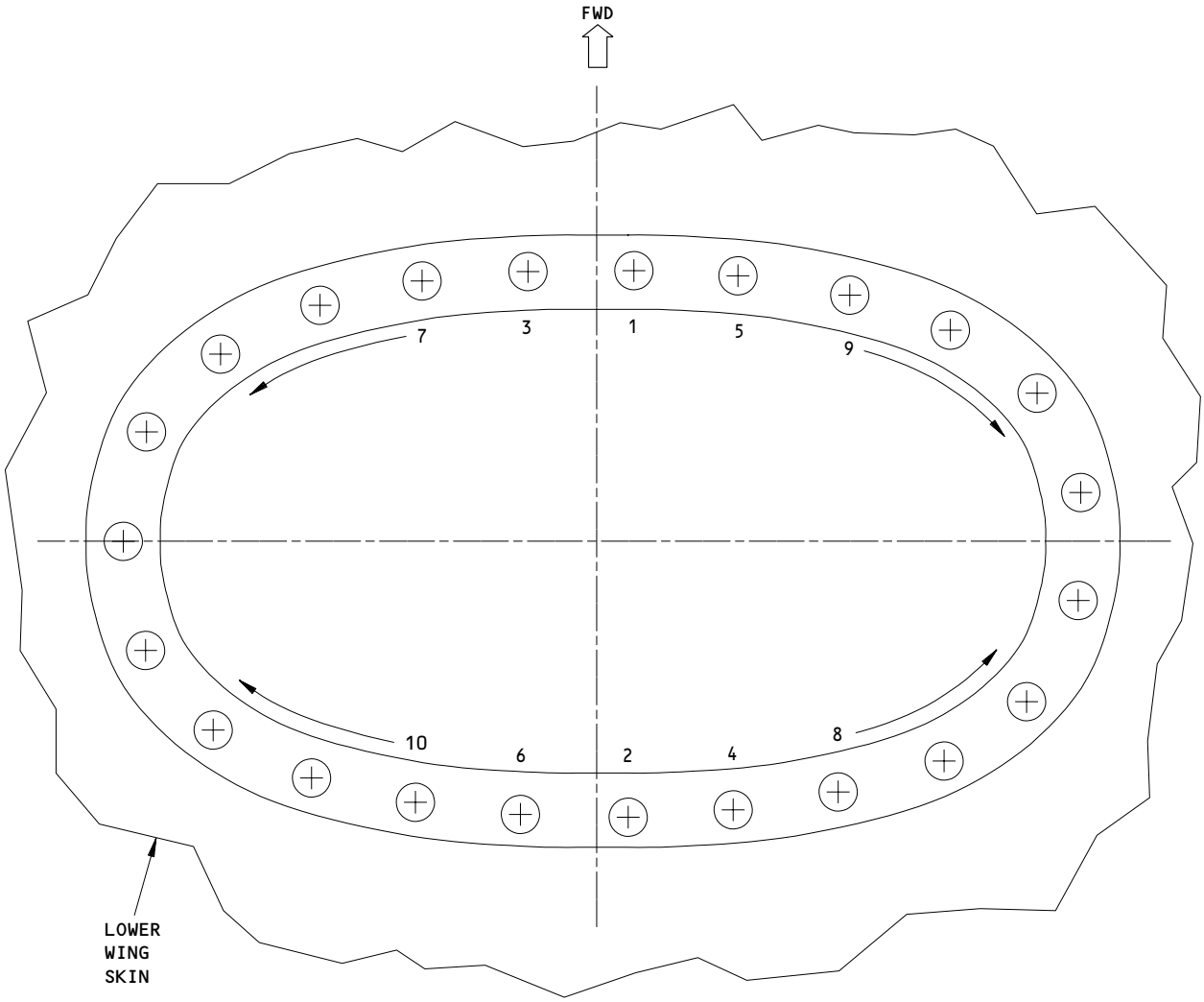

NOTE: TORQUE THE MOUNT BOLTS IN THE SEQUENCE SHOWN BY THE NUMBERS. THIS WILL MAKE SURE FUEL DOES NOT LEAK AROUND THE ACCESS DOOR.

Access Door Mount Bolt Torque Pattern
Figure 404

BOEING PROPRIETARY - Copyright (C) - Unpublished Work - See title page for details.

D. Do not mix the anti-corrosion compound and grease, BMS 3-38 and MIL-G-25537. If you replaced MIL-G-25537 filled gasket with BMS 3-38 filled gasket, remove all MIL-G-25537 grease from the clamp ring and the access door structure on the airplane.

TASK 28-11-01-004-013

2. Remove the Main Tank Access Door (Fig. 401)

A. Equipment

(1) PRE 65-41320-1 plastic ring, to give protection to an opened fuel tank access door, or equivalent

JBW Enterprise,
10008 Rainier Ave S
Seattle, WA 98178
Phone (206) 772-2221

B. References

(1) AMM 28-11-00/201, Fuel Tanks
(2) AMM 28-26-00/201, Defueling

C. Access

(1) Location Zones

532	Main Tank-Inboard of Rib No. 10 (Left)
541	Main Tank-Outboard of Rib No. 10 (Left)
632	Main Tank-Inboard of Rib No. 10 (Right)
641	Main Tank-Outboard of Rib No. 10 (Right)

(2) Access Panels

532BB	Main Tank Access Door (Left)
532DB	Main Tank Access Door (Left)
532EB	Main Tank Access Door (Left)
532FB	Main Tank Access Door (Left)
541AB	Main Tank Access Door (Left)
541BB	Main Tank Access Door (Left)
541CB	Main Tank Access Door (Left)
541DB	Main Tank Access Door (Left)
541EB	Main Tank Access Door (Left)
541FB	Main Tank Access Door (Left)
541GB	Main Tank Access Door (Left)
541HB	Main Tank Access Door (Left)
541JB	Main Tank Access Door (Left)
541KB	Main Tank Access Door (Left)
541LB	Main Tank Access Door (Left)
541MB	Main Tank Access Door (Left)
541NB	Main Tank Access Door (Left)
541PB	Main Tank Access Door (Left)

BOEING PROPRIETARY - Copyright (C) - Unpublished Work - See title page for details.

541QB Main Tank Access Door (Left)
541SB Main Tank Access Door (Left)
541TB Main Tank Access Door (Left)
541UB Main Tank Access Door (Left)
541VB Main Tank Access Door (Left)
541WB Main Tank Access Door (Left)
541XB Main Tank Access Door (Left)
632BB Main Tank Access Door (Right)
632DB Main Tank Access Door (Right)
632EB Main Tank Access Door (Right)
632FB Main Tank Access Door (Right)
641AB Main Tank Access Door (Right)
641BB Main Tank Access Door (Right)
641CB Main Tank Access Door (Right)
641DB Main Tank Access Door (Right)
641EB Main Tank Access Door (Right)
641FB Main Tank Access Door (Right)
641GB Main Tank Access Door (Right)
641HB Main Tank Access Door (Right)
641JB Main Tank Access Door (Right)
641KB Main Tank Access Door (Right)
641LB Main Tank Access Door (Right)
641MB Main Tank Access Door (Right)
641NB Main Tank Access Door (Right)
641PB Main Tank Access Door (Right)
641QB Main Tank Access Door (Right)
641SB Main Tank Access Door (Right)
641TB Main Tank Access Door (Right)
641UB Main Tank Access Door (Right)
641VB Main Tank Access Door (Right)
641WB Main Tank Access Door (Right)
641XB Main Tank Access Door (Right)

D. Procedure

S 654-001
(1) Defuel the applicable main fuel tank (AMM 28-26-00/201).

S 914-014

WARNING: OBEY THE FUEL TANK ENTRY PRECAUTIONS. FAILURE TO OBEY THE FUEL TANK ENTRY PRECAUTIONS CAN CAUSE INJURY OR DAMAGE.

(2) Obey the fuel tank entry precautions (AMM 28-11-00/201).

S 034-002
(3) Hold the clamp ring and remove the mounting bolts.

S 034-003
(4) Remove the clamp ring and the gasket.
(a) Discard the gasket.

BOEING PROPRIETARY - Copyright (C) - Unpublished Work - See title page for details.

S 024-015

CAUTION: DO NOT USE A LEVER (PRY) ON THE MAIN TANK ACCESS DOOR. IF THE MAIN TANK ACCESS DOOR DOES NOT MOVE FREELY, USE A RUBBER MALLET AND HIT LIGHTLY AROUND THE MAIN TANK ACCESS DOOR. IF YOU ARE NOT CAREFUL, SCRATCHES OR DAMAGE TO THE SEAL SURFACE CAN OCCUR.

(5) Push up on the main tank access door.

S 024-004

(6) Remove the main tank access door from the main fuel tank.

S 494-032

(7) Install a plastic ring around the opened fuel tank access door to protect the access door.

NOTE: It is necessary to supply protection to the surface in the fuel tank immediately around the opening to keep a good seal surface and to prevent fuel leaks.

TASK 28-11-01-404-005

3. Install the Main Tank Access Door (Fig. 401)

A. General

(1) Anti-corrosion compound BMS3-38 (Cor-Ban 27L) is the recommended for access door gasket installations. BMS3-38 gives improved corrosion protection between the access door, mesh gasket and wing surfaces. Grease, MIL-G-25537 (Aero Shell No. 14), can still be used for access door gaskets, but should be replaced with BMS3-38 as soon as practical.

(2) Do not mix the anti-corrosion compound and grease, BMS 3-38 and MIL-G-25537. If you replaced MIL-G-25537 filled gasket with BMS 3-38 filled gasket, remove all MIL-G-25537 grease from the clamp ring and the access door structure on the airplane.

BOEING PROPRIETARY - Copyright (C) - Unpublished Work - See title page for details.

(3) The subsequent main tank access door panels are high impact resistant panels, these panels must not be replaced with standard access panels:

LEFT WING	RIGHT WING
532BB	632BB
532DB	632DB
532EB	632EB
532FB	632FB

B. Consumable Materials
(1) Anti-corrosion Compound or Grease - Use one of these (BMS3-38 is recommended):
(a) G50237 Non-drying Corrosion Inhibiting Compound, BMS3-38
(b) D00020 Grease, Anti-corrosion - Aero Shell No. 14, MIL-G-25537 (AMM 20-30-03/201)
(2) B00068 Solvent - Denatured Alcohol
(3) G00034 Cotton Wiper, Process Cleaning Absorbent Wiper (cheesecloth, gauze) BMS15-5
(4) G02353 Lubricant-Petrolatum, VV-P-236

C. References
(1) AMM 12-11-01/301, Fuel Tank Pressure Fueling
(2) AMM 28-11-00/201, Fuel Tanks
(3) AIPC 28-11-01, Fig. 1
(4) SRM 57-20-01

D. Access
(1) Location Zones
532 Main Tank-Inboard of Rib No. 10 (Left)
541 Main Tank-Outboard of Rib No. 10 (Left)
632 Main Tank-Inboard of Rib No. 10 (Right)
641 Main Tank-Outboard of Rib No. 10 (Right)

(2) Access Panels
532BB Main Tank Access Door (Left)
532DB Main Tank Access Door (Left)
532EB Main Tank Access Door (Left)
532FB Main Tank Access Door (Left)
541AB Main Tank Access Door (Left)
541BB Main Tank Access Door (Left)
541CB Main Tank Access Door (Left)
541DB Main Tank Access Door (Left)

BOEING PROPRIETARY - Copyright (C) - Unpublished Work - See title page for details.

541EB Main Tank Access Door (Left)
541FB Main Tank Access Door (Left)
541GB Main Tank Access Door (Left)
541HB Main Tank Access Door (Left)
541JB Main Tank Access Door (Left)
541KB Main Tank Access Door (Left)
541LB Main Tank Access Door (Left)
541MB Main Tank Access Door (Left)
541NB Main Tank Access Door (Left)
541PB Main Tank Access Door (Left)
541QB Main Tank Access Door (Left)
541SB Main Tank Access Door (Left)
541TB Main Tank Access Door (Left)
541UB Main Tank Access Door (Left)
541VB Main Tank Access Door (Left)
541WB Main Tank Access Door (Left)
541XB Main Tank Access Door (Left)
632BB Main Tank Access Door (Right)
632DB Main Tank Access Door (Right)
632EB Main Tank Access Door (Right)
632FB Main Tank Access Door (Right)
641AB Main Tank Access Door (Right)
641BB Main Tank Access Door (Right)
641CB Main Tank Access Door (Right)
641DB Main Tank Access Door (Right)
641EB Main Tank Access Door (Right)
641FB Main Tank Access Door (Right)
641GB Main Tank Access Door (Right)
641HB Main Tank Access Door (Right)
641JB Main Tank Access Door (Right)
641KB Main Tank Access Door (Right)
641LB Main Tank Access Door (Right)
641MB Main Tank Access Door (Right)
641NB Main Tank Access Door (Right)
641PB Main Tank Access Door (Right)
641QB Main Tank Access Door (Right)
641SB Main Tank Access Door (Right)
641TB Main Tank Access Door (Right)
641UB Main Tank Access Door (Right)
641VB Main Tank Access Door (Right)
641WB Main Tank Access Door (Right)
641XB Main Tank Access Door (Right)

E. Prepare to Install the Access Door

S 914-018

WARNING: OBEY THE FUEL TANK ENTRY PRECAUTIONS. FAILURE TO OBEY THE FUEL TANK ENTRY PRECAUTIONS CAN CAUSE INJURY OR DAMAGE.

(1) Obey the fuel tank entry precautions (AMM 28-11-00/201).

BOEING PROPRIETARY - Copyright (C) - Unpublished Work - See title page for details.

S 014-065
(2) Remove the rubber protector from the access opening if one is installed.

S 114-066
(3) Thoroughly clean these surfaces:

NOTE: Use a cotton wiper (BMS 15-5) moistened with solvent.

(a) Access door
(b) Access door opening
(c) Sealing surfaces of the access door opening.

S 214-067
(4) Examine the inner wing surface and the wing surface near the access door opening for corrosion.
(a) If you find corrosion, refer to the Structural Repair Manual (SRM 57-20-01).

F. Prepare the Molded Rubber Seal for Installation

S 214-035
(1) Examine the rubber seal for deterioration.

NOTE: You can remove the rubber seal on all high impact-resistant access doors and all new replacement access doors (Fig. 401).

S 114-068
(2) Do these steps to clean the molded rubber seal:
(a) Dampen a cotton wiper (BMS15-5) with denatured alcohol.
(b) Lightly wipe the seals with the cotton wiper (BMS15-5).

S 214-069
(3) Examine the molded rubber seal for these signs of deterioration:
(a) Cuts
(b) Delaminations from the access door
(c) Chafing
(d) Flat spots
(e) Any condition which will not let the rubber seal form a fuel-tight seal.

BOEING PROPRIETARY - Copyright (C) - Unpublished Work - See title page for details.

(f) Replace the rubber seal if it is necessary (AMM 28-11-10/801).
1) If it is not possible to replace the rubber seal, replace the access door.

S 644-034
(4) Apply a thin layer of petrolatum to the rubber seal.

NOTE: This will prevent damage to the rubber seal during subsequent access door removal. It will also be easier to remove the access door.

G. Prepare the Knitted Aluminum Gasket for Installation

S 164-047
(1) Clean the clamp ring with a cotton wiper (BMS15-5) and solvent.

S 624-048
(2) Make sure both sides of the new gasket are filled with the correct anti-corrosion compound or grease.

NOTE: CDCCL - Refer to the task: Airworthiness Limitation Precautions (AMM 28-00-00/201), for important information on Critical Design Configuration Control Limitations (CDCCLs).

NOTE: This is applicable to Airworthiness Limitation 28-AWL-14.

(a) Do not mix MIL-G-25537 and BMS3-38.

S 214-049
(3) Do a check of the manufacturing date (shelf-life) information on the replacement gasket container.
(a) If the gasket is more than five years old, do these steps:
1) Remove the old anti-corrosion compound or grease from the gasket.
2) Refill both sides of the gasket with new anti-corrosion compound or grease.

NOTE: CDCCL - Refer to the task: Airworthiness Limitation Precautions (AMM 28-00-00/201), for important information on Critical Design Configuration Control Limitations (CDCCLs).

NOTE: This is applicable to Airworthiness Limitation 28-AWL-14.

BOEING PROPRIETARY - Copyright (C) - Unpublished Work - See title page for details.

(b) If the gasket is less than five years old, it is not necessary to remove the old anti-corrosion compound or grease.

S 434-050
(4) Put a new aluminum gasket carrier tray package face up on a flat surface.

S 434-051
(5) Remove the paper cover from the carrier tray.

S 434-052
(6) Since the hole locations are not symmetrical, carefully put the clamp ring over the gasket (countersunk end of holes face up) so that the clamp ring and gasket holes align.

S 434-053
(7) Push the clamp ring on the gasket until the clamp ring firmly touches the gasket.

S 434-054
(8) Remove the clamp ring, gasket, and release strip from the carrier tray as a unit.

S 434-055
(9) Put the unit, gasket side up, on a flat surface.

S 084-056
(10) Remove the release strip from the gasket.

H. Install the Access Door

S 214-071
(1) Make sure the molded rubber seal is installed on the access door.

NOTE: CDCCL - Refer to the task: Airworthiness Limitation Precautions (AMM 28-00-00/201), for important information on Critical Design Configuration Control Limitations (CDCCLs).

NOTE: This is applicable to Airworthiness Limitation 28-AWL-14.

BOEING PROPRIETARY - Copyright (C) - Unpublished Work - See title page for details.

S 624-058

(2) Do not mix MIL-G-25537 and BMS3-38.

S 624-057

CAUTION: DO NOT APPLY TOO MUCH ANTI-CORROSION COMPOUND OR GREASE TO THE LOWER SURFACE OF THE WING. YOU CAN CAUSE DAMAGE TO THE ACCESS DOOR WITH HYDRAULIC PRESSURE FROM THE ANTI-CORROSION COMPOUND OR GREASE WHEN YOU INSTALL THE MOUNTING BOLTS.

(3) Apply a very thin layer of BMS 3-38 compound (recommended) or MIL-G-25537 grease to the external area of the access opening (the area where the gasket contacts wing skin).

S 434-059

(4) Put the main tank access door in the opening in the main fuel tank.

S 434-061

CAUTION: MAKE SURE THE ALIGNMENT INSERT ON THE ACCESS DOOR IS ON THE CORRECT SIDE OF THE ACCESS OPENING. FUEL LEAKAGE CAN OCCUR IF THE ACCESS DOOR IS NOT INSTALLED IN THE CORRECT DIRECTION.

(5) On the main tank access doors with the fuel measuring sticks, make sure the alignment insert in the access door is in the same position as the alignment notch in the wing skin (Fig. 401).

S 434-062

(6) On access doors which are impact resistant, make sure the applicable warning statement and index mark are on the access door and on the adjacent airplane skin (Fig. 403).

S 434-063

(7) Put the access door inside the tank and put it over the opening.

S 434-016

(8) Set and hold the gasket and the clamp ring in the opening of the main fuel tank.

BOEING PROPRIETARY - Copyright (C) - Unpublished Work - See title page for details.

S 214-072
(9) Make sure the gasket is correctly installed between the outer face of the door and the wing skin.

NOTE: CDCCL - Refer to the task: Airworthiness Limitation Precautions (AMM 28-00-00/201), for important information on Critical Design Configuration Control Limitations (CDCCLs).

NOTE: This is applicable to Airworthiness Limitation 28-AWL-14.

S 634-017
(10) Install the mounting bolts in the clamp ring and the gasket.

S 034-010
(11) Tighten the mounting bolts to 30-40 pound-inches (3.4-4.5 Nm).

NOTE: Start to tighten the mounting bolts from the centerline to the outboard direction and equally in both directions (Fig. 404).

(a) If the access door is new (never installed), do these steps to tighten the mounting bolts:

CAUTION: DO NOT EXCEED 40 POUNDS-INCHES (4.5 Nm) OF TORQUE, UNLESS THE ACCESS DOOR IS NEW (NEVER INSTALLED). DAMAGE TO THE ACCESS DOOR CAN OCCUR.

1) If it is necessary, use a torque of 50-75 pound-inches (5.6-8.5 Nm) to install the mounting bolts.
2) If you use a torque of more than 40 pound-inches (4.5 Nm), back out the mounting bolts and re-install the mounting bolts with a torque of 30-40 pound-inches (3.4-4.5 Nm).

S 654-011
(12) Refuel the applicable main fuel tank (AMM 12-11-01/301).

S 214-012
(13) Make sure there are no fuel leaks.

BOEING PROPRIETARY - Copyright (C) - Unpublished Work - See title page for details.

BOEING PROPRIETARY - Copyright (C) - Unpublished Work - See title page for details.

AUXILIARY TANK ACCESS DOOR - REMOVAL/INSTALLATION

1. General
   A. There is one access door for the left compartment and one access door for the right compartment of the auxiliary fuel tank. Each auxiliary tank access door is elliptical with maximum dimensions of 10 x 18 inches, and is found in the lower wing surface.
   B. To get access to the center compartment of the auxiliary fuel tank, the pressure relief panel, 194HR, must be removed. The center compartment of the auxiliary fuel tank contains an access door and three two-piece baffle doors. In the center compartment of the auxiliary, the three two-piece baffle doors must be removed for access.
   C. BMS 3-38 is now the preferred anti-corrosion compound for access door gasket installations. BMS 3-38 provides an anti-corrosion compound, Cor-Ban 27L, with improved corrosion protection between the access door, mesh gasket and wing surfaces. Anti-corrosion grease, MIL-G-25537, can still be used for access door gaskets, but should be replaced with BMS 3-38 as soon as practical.

TASK 28-11-02-004-001

2. Remove the Auxiliary Tank Access Door (Fig. 401)
   A. Equipment
      (1) PRE 65-41320-1 plastic ring, to give protection to an opened fuel tank access door, or equivalent

          JBW Enterprise,
          10008 Rainier Avenue South
          Seattle, WA 98178
          Phone (206) 722-2221

   B. References
      (1) AMM 06-41-00/201, Fuselage Access Doors and Panels
      (2) AMM 28-11-00/201, Fuel Tanks
      (3) AMM 28-26-00/201, Defueling
   C. Access
      (1) Location Zones

136	Environmental Control System Bay (Right)
194	Wing to Body - Forward Lower Half (Right)
531	Center Auxiliary Tank (Left)
631	Center Auxiliary Tank (Right)

      (2) Access Panels

136KZ	Auxiliary Tank Access Door (Center)
194HR	Pressure Relief Door (Right)
531BB	Auxiliary Tank Access Door (Left)
631BB	Auxiliary Tank Access Door (Right)

   D. Procedure

      S 654-002
      (1) Drain and purge the auxiliary fuel tank (AMM 28-26-00/201).

BOEING PROPRIETARY - Copyright (C) - Unpublished Work - See title page for details.

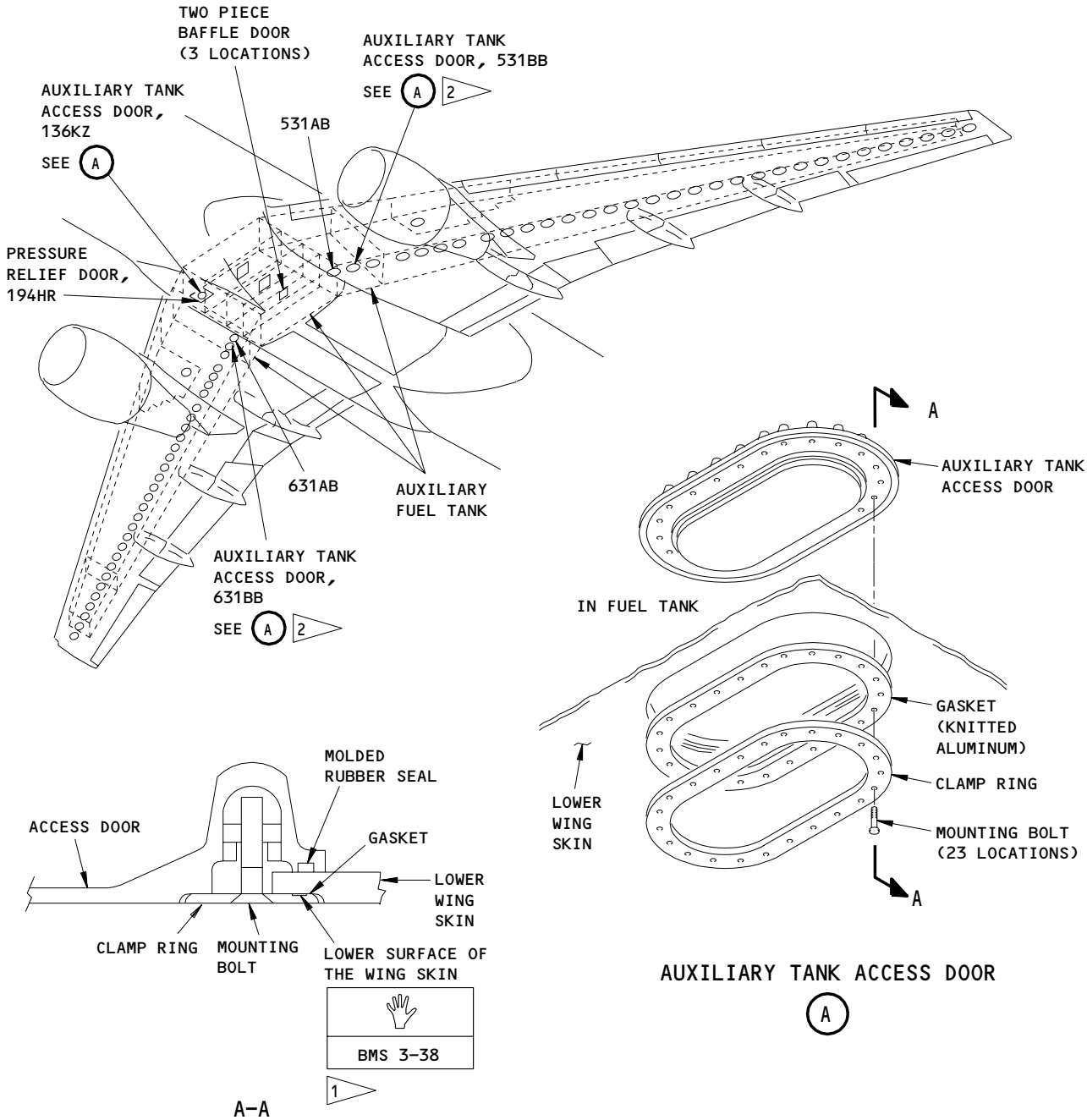

1 APPLY A THIN LAYER (0.010 TO 0.015 INCH) (0.254 TO 0.381 mm) OF ANTI-CORROSION COMPOUND TO THE LOWER SURFACE OF THE WING SKIN THAT TOUCHES THE ALUMINUM GASKET. (REFER TO THE TEXT)

2 IMPACT RESISTANT ACCESS DOOR

Auxiliary Tank Access Door Installation
Figure 401

BOEING PROPRIETARY - Copyright (C) - Unpublished Work - See title page for details.

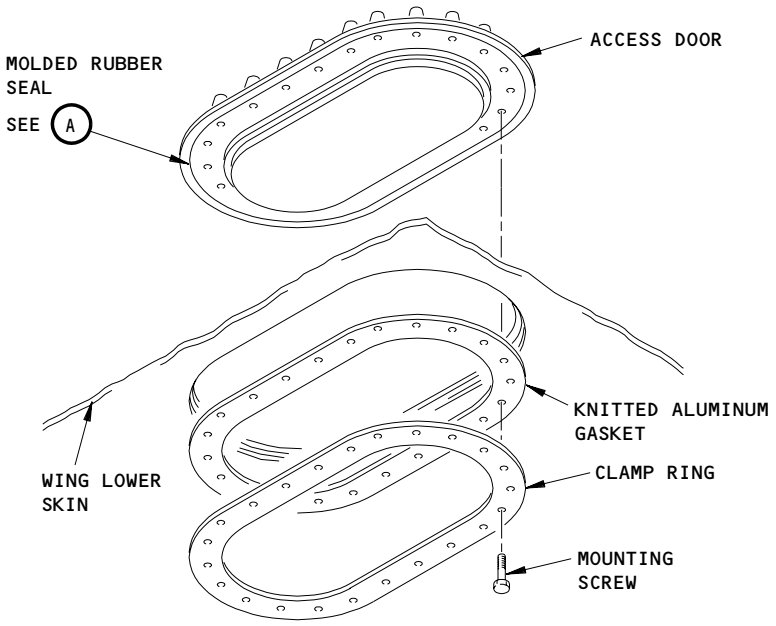

FUEL TANK ACCESS DOOR

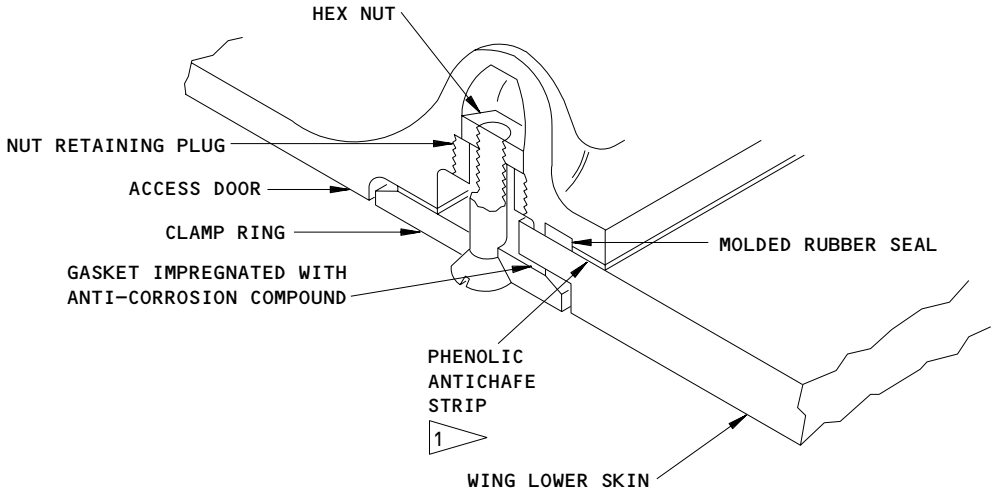

MOLDED RUBBER SEAL

A

1 NOT INSTALLED ON MOLDED ALUMINUM HONEYCOMB DOOR

Fuel Tank High Impact Access Door Repair
Figure 402

BOEING PROPRIETARY - Copyright (C) - Unpublished Work - See title page for details.

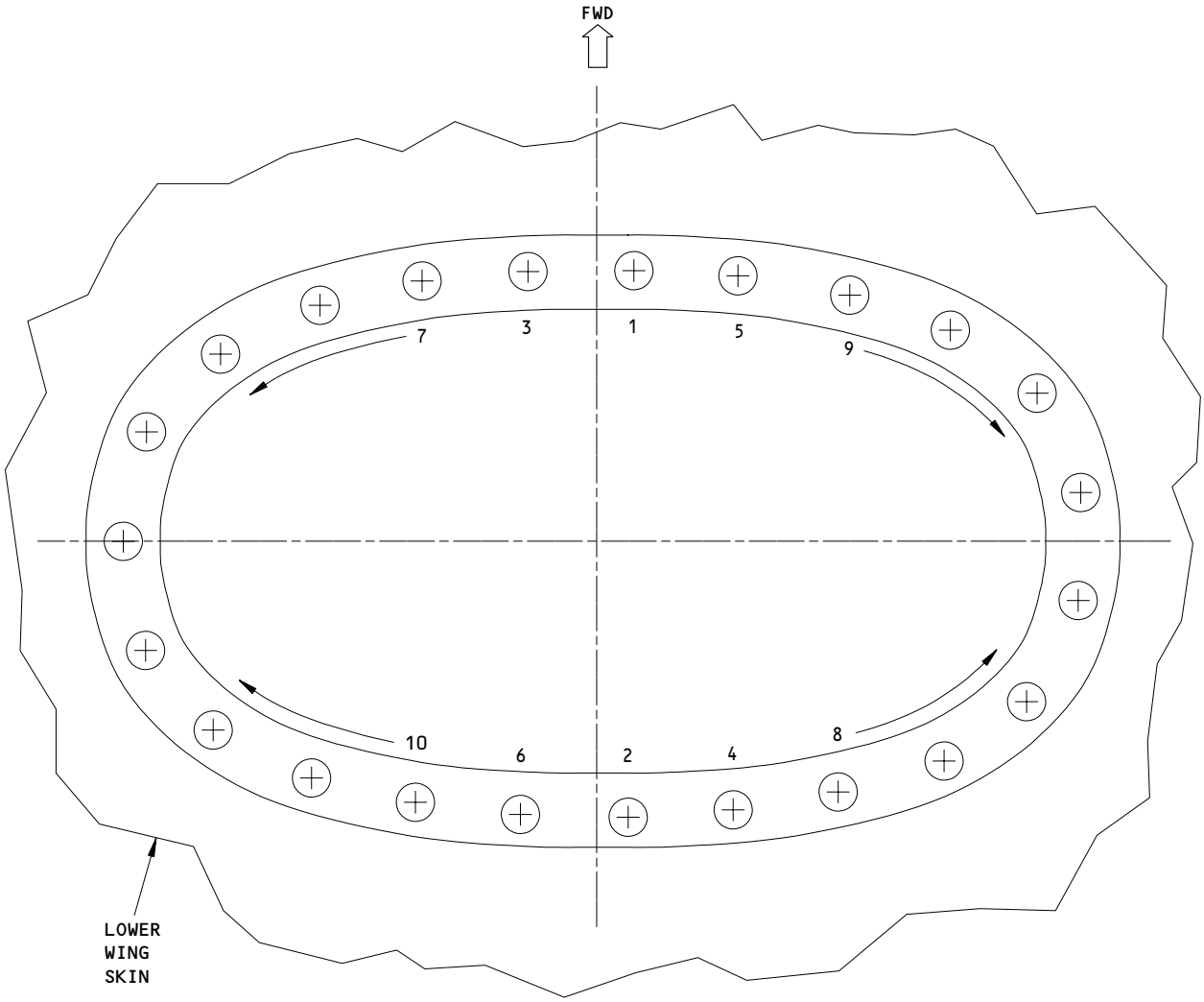

NOTE: TORQUE THE MOUNT BOLTS IN THE SEQUENCE SHOWN BY THE NUMBERS. THIS WILL MAKE SURE FUEL DOES NOT LEAK AROUND THE ACCESS DOOR.

Access Door Mount Bolt Torque Pattern
Figure 403

BOEING PROPRIETARY - Copyright (C) - Unpublished Work - See title page for details.

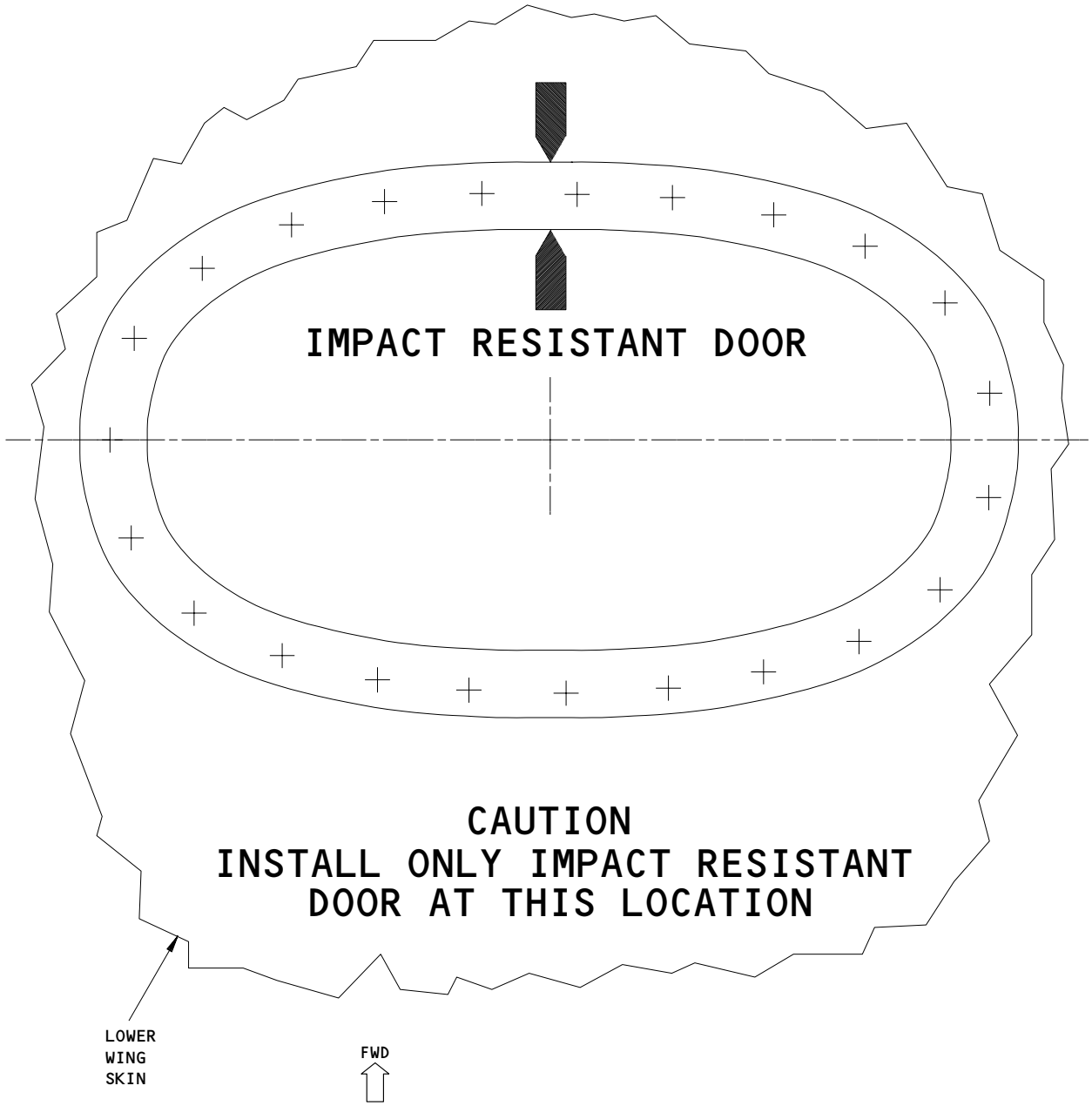

Identification of Impact Resistant Access Doors
Figure 404

BOEING PROPRIETARY - Copyright (C) - Unpublished Work - See title page for details.

S 014-051

WARNING: OBEY THE FUEL TANK ENTRY PRECAUTIONS. FAILURE TO OBEY THE FUEL TANK ENTRY PRECAUTIONS CAN CAUSE INJURY OR DAMAGE.

(2) Obey the fuel tank entry precautions (AMM 28-11-00/201).

S 034-004

(3) To get access to the auxiliary tank access door 136KZ, open the pressure relief door, 194HR (AMM 06-41-00/201).

S 034-006

(4) Hold the clamp ring and remove the mounting bolts.

S 034-005

(5) Remove the clamp ring and the gasket.
(a) Discard the gasket.

S 024-052

CAUTION: DO NOT USE A LEVER (PRY) ON THE AUXILIARY TANK ACCESS DOOR. IF THE AUXILIARY TANK ACCESS TANK DOES NOT MOVE FREELY, USE A RUBBER MALLET AND HIT LIGHTLY AROUND THE AUXILIARY TANK ACCESS DOOR. IF YOU ARE NOT CAREFUL, SCRATCHES OR DAMAGE TO THE SEAL SURFACE CAN OCCUR.

(6) Push up on the auxiliary tank access door.

S 024-007

(7) Remove the auxiliary tank access door from the fuel tank.

S 014-008

(8) For the center compartment of the auxiliary fuel tank, remove the three two-piece baffle doors if it is necessary for access.

S 494-082

(9) Install a plastic ring around the opened fuel tank access door to protect the access door.

NOTE: It is necessary to supply protection to the surface in the fuel tank immediately around the opening to keep a good seal surface and to prevent fuel leaks.

BOEING PROPRIETARY - Copyright (C) - Unpublished Work - See title page for details.

TASK 28-11-02-404-013

3. Install the Auxiliary Tank Access Door (Fig. 401)

A. General

(1) Anti-corrosion compound, BMS3-38 (Cor-Ban 27L), is recommended for access door gasket installations. BMS3-38 gives improved corrosion protection between the access door, mesh gasket and wing surfaces. Anti-corrosion grease, MIL-G-25537 (Aero Shell No. 14), can still be used for access door gaskets, but should be replaced with BMS3-38 as soon as practical.

(2) Do not mix the anti-corrosion compound and grease, BMS 3-38 and MIL-G-25537. If you replaced MIL-G-25537 filled gasket with BMS 3-38 filled gasket, remove all MIL-G-25537 grease from the clamp ring and the access door structure on the airplane.

(3) The subsequent auxiliary tank access door panels are high impact resistant panels, these panels must not be replaced with standard access panels:

LEFT WING	RIGHT WING
531BB	631BB

B. Consumable Materials

(1) Anti-corrosion Compound - Use one of these (BMS3-38 preferred):

(a) G50237 Non-drying Corrosion Inhibiting Compound, BMS3-38

(b) D00020 Grease, Anti-corrosion - Aero Shell No. 14, MIL-G-25537 (AMM 20-30-03/201)

(2) B00786 Solvent - Denatured Alcohol

(3) G02353 Lubricant-Petrolatum, VV-P-236

(4) G00034 Cotton Wiper, Process Cleaning Absorbent Wiper (cheesecloth, gauze) BMS15-5

C. References

(1) AMM 06-41-00/201, Fuselage Access Doors and Panels

(2) AMM 12-11-01/301, Fuel Tank Pressure Fueling

(3) AMM 28-11-00/201, Fuel Tanks

(4) SRM 57-20-01

D. Access

(1) Location Zones

136 Environmental Control System Bay (Right)
194 Wing to Body - Forward Lower Half (Right)
531 Center Auxiliary Tank (Left)
631 Center Auxiliary Tank (Right)

(2) Access Panels

136KZ Auxiliary Tank Access Door (Center)
194HR Pressure Relief Door (Right)
531BB Auxiliary Tank Access Door (Left)
631BB Auxiliary Tank Access Door (Right)

BOEING PROPRIETARY - Copyright (C) - Unpublished Work - See title page for details.

E. Prepare to Install the Access Door

S 014-053

WARNING: OBEY THE FUEL TANK ENTRY PRECAUTIONS. FAILURE TO OBEY THE FUEL TANK ENTRY PRECAUTIONS CAN CAUSE INJURY OR DAMAGE.

(1) Obey the fuel tank entry precautions (AMM 28-11-00/201).

S 014-132

(2) Remove the rubber protector from the access opening if one is installed.

S 414-014

(3) For the center compartment of the auxiliary fuel tank, install the three two piece-baffle doors if necessary.

S 114-133

(4) Thoroughly clean these surfaces:

NOTE: Use a cotton wiper (BMS15-5) moistened with solvent.

(a) Access door
(b) Access door opening
(c) Sealing surfaces of the access door opening.

S 214-134

(5) Examine the inner wing surface and the wing surface near the access door opening for corrosion.
(a) If you find corrosion, refer to the Structural Repair Manual (SRM 57-20-01).

F. Prepare the Molded Rubber Seal for Installation

S 114-135

(1) Do these steps to clean the molded rubber seal:
(a) Dampen a cotton wiper (BMS15-5) with denatured alcohol.
(b) Lightly wipe the seals with the cotton wiper (BMS15-5).

S 214-136

(2) Examine the molded rubber seal for these signs of deterioration:
(a) Cuts
(b) Delaminations from the access door
(c) Chafing
(d) Flat spots
(e) Any condition which will not let the rubber seal form a fuel-tight seal.

BOEING PROPRIETARY - Copyright (C) - Unpublished Work - See title page for details.

(f) If there is a problem with the molded rubber seal, replace the seal (AMM 28-11-00/801) or the access door.

NOTE: You can replace the rubber seal ring on all high impact-resistant access doors and all new replacement access doors.

S 644-083

(3) Apply a thin layer of petrolatum to the rubber seal.

NOTE: This will prevent damage to the rubber seal during subsequent access door removal. It will also be easier to remove the access door.

S 424-021

(4) Put the auxiliary tank access door in the opening in the fuel tank.

G. Prepare the New Knitted Aluminum Gasket for Installation

S 164-111

(1) Clean the clamp ring with a cotton wiper (BMS 15-5) and solvent.

S 624-112

(2) Make sure both sides of the new gasket is filled with the correct anti-corrosion compound or grease.

NOTE: CDCCL - Refer to the task: Airworthiness Limitation Precautions (AMM 28-00-00/201), for important information on Critical Design Configuration Control Limitations (CDCCLs).

NOTE: This is applicable to Airworthiness Limitation 28-AWL-14.

(a) Do not mix MIL-G-25537 and BMS 3-38.

S 214-113

(3) Do a check of the manufacturing date (shelf-life) information on the replacement gasket container.

(a) If the gasket is more than five years old, do these steps:

1) Remove the old anti-corrosion compound or grease from the gasket.

BOEING PROPRIETARY - Copyright (C) - Unpublished Work - See title page for details.

2) Refill both sides of the gasket with new anti-corrosion compound or grease.

NOTE: CDCCL - Refer to the task: Airworthiness Limitation Precautions (AMM 28-00-00/201), for important information on Critical Design Configuration Control Limitations (CDCCLs).

NOTE: This is applicable to Airworthiness Limitation 28-AWL-14.

(b) If the gasket is less than five years old, it is not necessary to remove the old anti-corrosion compound or grease.

S 434-114
(4) Put a new aluminum gasket carrier tray package face up on a flat surface.

S 434-115
(5) Remove the paper cover from the carrier tray.

S 434-116
(6) Since the hole locations are not symmetrical, carefully put the clamp ring over the gasket (countersunk end of holes face up) so that the clamp ring and gasket holes align.

S 434-117
(7) Push the clamp ring on the gasket until the clamp ring firmly touches the gasket.

S 434-118
(8) Remove the clamp ring, gasket, and release strip from the carrier tray as a unit.

S 434-119
(9) Put the unit, gasket side up, on a flat surface.

S 084-120
(10) Remove the release strip from the gasket.

H. Install the Access Door

S 214-137
(1) Make sure the molded rubber seal is installed on the access door.

NOTE: CDCCL - Refer to the task: Airworthiness Limitation Precautions (AMM 28-00-00/201), for important information on Critical Design Configuration Control Limitations (CDCCLs).

NOTE: This is applicable to Airworthiness Limitation 28-AWL-14.

BOEING PROPRIETARY - Copyright (C) - Unpublished Work - See title page for details.

S 624-121
(2) Do not mix MIL-G-25537 and BMS 3-38.

S 624-122

CAUTION: DO NOT APPLY TOO MUCH ANTI-CORROSION COMPOUND OR GREASE TO THE LOWER SURFACE OF THE WING. YOU CAN CAUSE DAMAGE TO THE ACCESS DOOR WITH HYDRAULIC PRESSURE FROM THE ANTI-CORROSION COMPOUND OR GREASE WHEN YOU INSTALL THE MOUNTING BOLTS.

(3) Apply a very thin layer of BMS 3-38 compound (recommended) or MIL-G-25537 grease to the external area of the access opening (the area where the gasket contacts wing skin).

S 434-153
(4) On access doors which are impact resistant, make sure the applicable warning statement and index mark are on the access door and on the adjacent airplane skin (Fig. 404).

S 434-127
(5) Put the access door inside the tank and put it over the opening.

S 434-023
(6) Put and hold the gasket and the clamp ring in the opening in the lower wing skin.

S 214-138
(7) Make sure the gasket is correctly installed between the outer face of the door and the wing skin.

NOTE: CDCCL - Refer to the task: Airworthiness Limitation Precautions (AMM 28-00-00/201), for important information on Critical Design Configuration Control Limitations (CDCCLs).

NOTE: This is applicable to Airworthiness Limitation 28-AWL-14.

S 434-024
(8) Install the mounting bolts in the gasket and clamp ring.

S 434-025
(9) Tighten the mounting bolts to 30-40 pound-inches. Start at the centerline and tighten the mounting bolts equally in both directions (Figure 403).

S 414-026
(10) For the auxiliary tank access door 136KZ, close the pressure relief door, 194HR (AMM 06-41-00/201).

BOEING PROPRIETARY - Copyright (C) - Unpublished Work - See title page for details.

S 654-027
(11) Refuel the fuel tank (AMM 12-11-01/301).

S 794-145
(12) Make sure there are no fuel leaks.

BOEING PROPRIETARY - Copyright (C) - Unpublished Work - See title page for details.

SURGE TANK ACCESS DOOR - REMOVAL/INSTALLATION

1. General
   A. Each fuel surge tank has three access doors found in the wing lower skin. Each door is elliptical in shape with maximum dimensions of 8 x 18 inches. A pressure relief valve is attached to the inside of the surge tank access doors 542AB and 642AB.
   B. This procedure contains two tasks. The first task removes the surge tank access door. The second task installs the surge tank access door.
   C. BMS 3-38 is now the preferred anti-corrosion compound for access door gasket installations. BMS 3-38 provides an anti-corrosion compound, Cor-Ban 27L, with improved corrosion protection between the access door, mesh gasket and wing surfaces. Anti-corrosion grease, MIL-G-25537, can still be used for access door gaskets, but should be replaced with BMS 3-38 as soon as practical.
   D. Do not mix the anti-corrosion compound and grease, BMS 3-38 and MIL-G-25537. If you replaced MIL-G-25537 filled gasket with BMS 3-38 filled gasket, remove all MIL-G-25537 grease from the clamp ring and the access door structure on the airplane.

TASK 28-11-03-004-001

2. Remove the Surge Tank Access Door (Fig. 401)
   A. References
      (1) AMM 12-11-03/301 Fuel Sump Draining
      (2) AMM 28-11-00/201, Fuel Tanks
   B. Access
      (1) Location Zones
          542 Surge Tank (Left)
          642 Surge Tank (Right)

      (2) Access Panels
          542AB Surge Tank Access Door (Left)
          542BB Surge Tank Access Door (Left)
          542CB Surge Tank Access Door (Left)
          642AB Surge Tank Access Door (Right)
          642BB Surge Tank Access Door (Right)
          642CB Surge Tank Access Door (Right)

   C. Procedure

      S 914-002

      WARNING: OBEY THE FUEL SUMP DRAINING PROCEDURE. IF YOU DO NOT OBEY THE FUEL SUMP DRAINING PROCEDURE, INJURY OR DAMAGE CAN OCCUR.

      (1) Drain the surge tank at the sump drain valve (AMM 12-11-03/301).

BOEING PROPRIETARY - Copyright (C) - Unpublished Work - See title page for details.

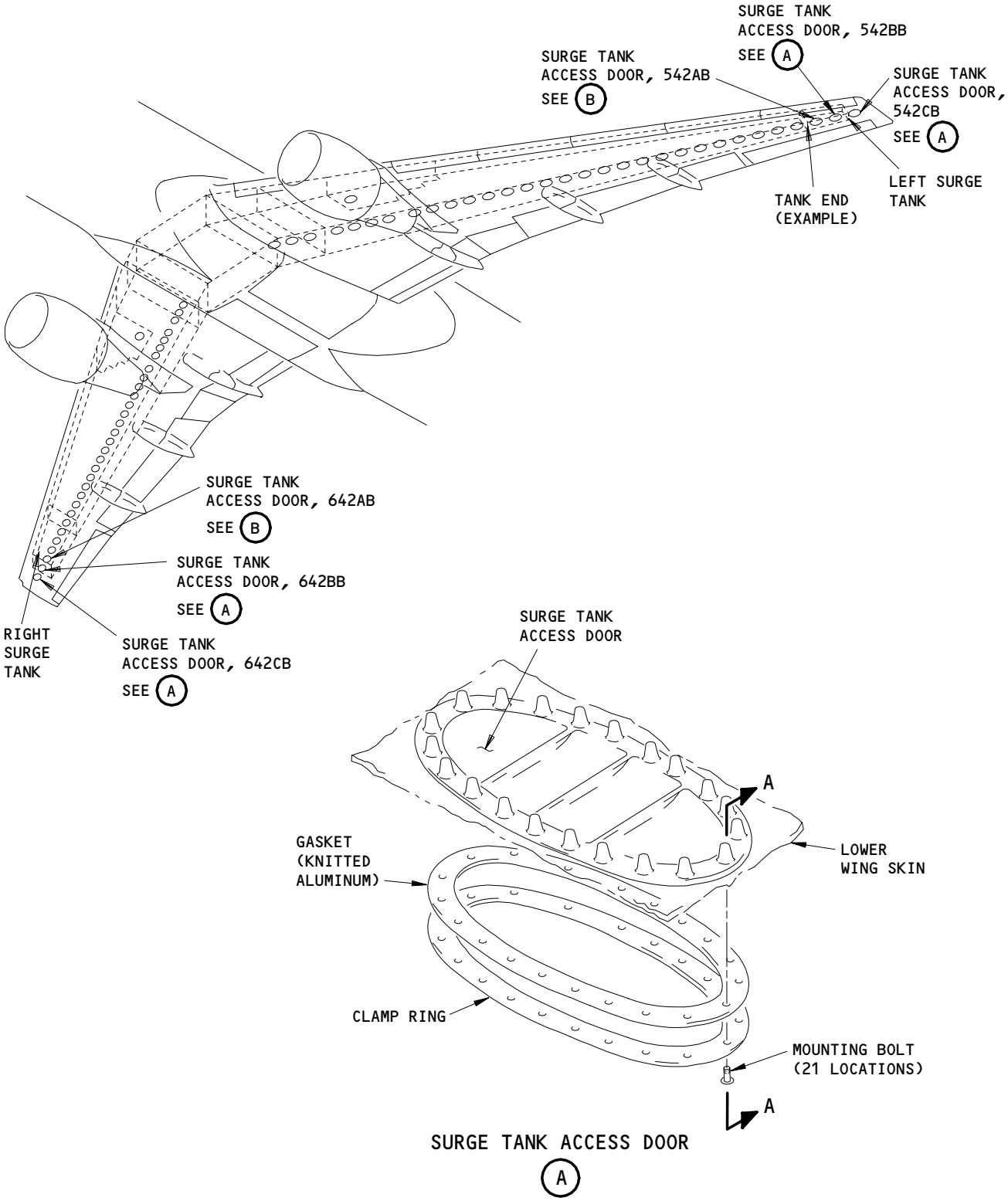

Surge Tank Access Door Installation
Figure 401 (Sheet 1)

BOEING PROPRIETARY - Copyright (C) - Unpublished Work - See title page for details.

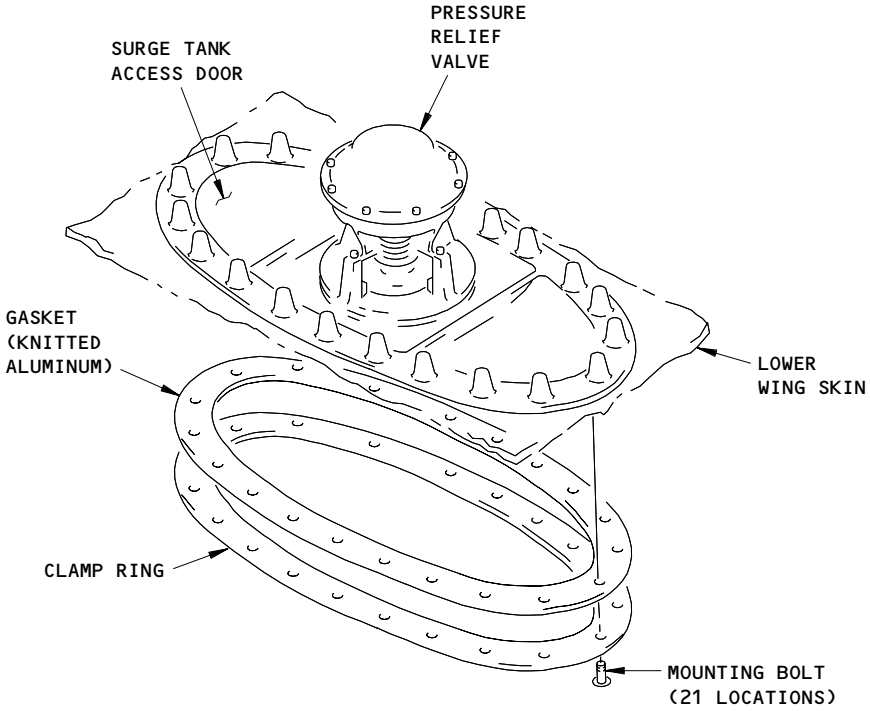

SURGE TANK ACCESS DOOR

B

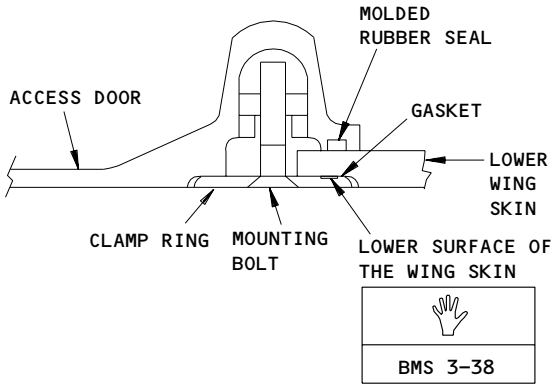

A-A

1 APPLY A THIN LAYER (0.010 TO 0.015 INCH) OF ANTI-CORROSION COMPOUND TO THE LOWER SURFACE OF THE WING SKIN THAT TOUCHES THE ALUMINUM GASKET. (REFER TO THE TEXT)

Surge Tank Access Door Installation
Figure 401 (Sheet 2)

BOEING PROPRIETARY - Copyright (C) - Unpublished Work - See title page for details.

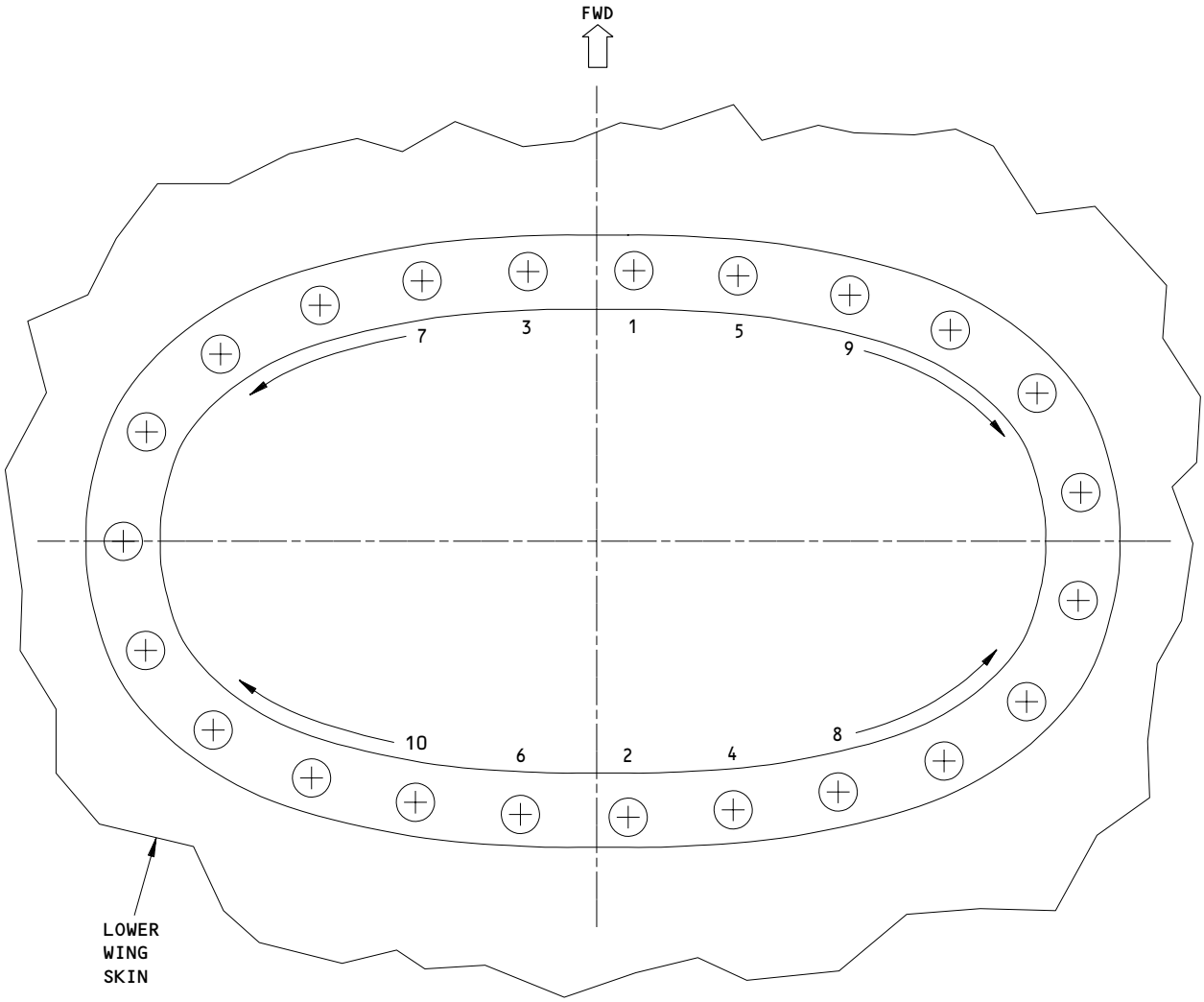

NOTE: TORQUE THE MOUNT BOLTS IN THE SEQUENCE SHOWN BY THE NUMBERS. THIS WILL MAKE SURE FUEL DOES NOT LEAK AROUND THE ACCESS DOOR.

Access Door Mount Bolt Torque Pattern
Figure 402

BOEING PROPRIETARY - Copyright (C) - Unpublished Work - See title page for details.

S 914-003

WARNING: OBEY THE FUEL TANK ENTRY PRECAUTIONS. FAILURE TO OBEY THE FUEL TANK ENTRY PRECAUTIONS CAN CAUSE INJURY OR DAMAGE.

(2) Obey the fuel tank entry precautions (AMM 28-11-00/201).

S 034-009

(3) Hold the clamp ring and remove the mounting bolts.

S 034-010

(4) Remove the clamp ring and the gasket.
   (a) Discard the gasket.

S 024-004

CAUTION: DO NOT USE A LEVER ON (PRY) THE SURGE TANK ACCESS DOOR. IF THE SURGE TANK ACCESS DOOR DOES NOT MOVE FREELY, USE A RUBBER MALLET AND HIT LIGHTLY AROUND THE SURGE TANK ACCESS DOOR. IF YOU ARE NOT CAREFUL, SCRATCHES OR DAMAGE TO THE SEAL SURFACE CAN OCCUR.

(5) Push up on the surge tank access door.

S 024-005

(6) Remove the surge tank access door from the surge tank.

TASK 28-11-03-404-011

3. Install the Surge Tank Access Door (Fig. 401)
   A. Consumable Materials
      (1) Anti-corrosion Compound - Use one of these (BMS3-38 preferred):
         (a) G50237 Non-drying Corrosion Inhibiting Compound, BMS3-38
         (b) D00020 Grease, Anti-corrosion - Aero Shell No. 14, MIL-G-25537 (AMM 20-30-03/201)
      (2) B00786 Solvent - Denatured Alcohol

BOEING PROPRIETARY - Copyright (C) - Unpublished Work - See title page for details.

(3) G00034 Cotton Wiper, Process Cleaning Absorbent Wiper (cheesecloth, gauze), BMS15-5

B. References
(1) AMM 28-11-00/201, Fuel Tanks
(2) SRM 57-20-01

C. Access
(1) Location Zones
542 Surge Tank (Left)
642 Surge Tank (Right)

(2) Access Panels
542AB Surge Tank Access Door (Left)
542BB Surge Tank Access Door (Left)
542CB Surge Tank Access Door (Left)
642AB Surge Tank Access Door (Right)
642BB Surge Tank Access Door (Right)
642CB Surge Tank Access Door (Right)

D. Prepare to Install the Access Door

S 914-006

WARNING: OBEY THE FUEL TANK ENTRY PRECAUTIONS. FAILURE TO OBEY THE FUEL TANK ENTRY PRECAUTIONS CAN CAUSE INJURY OR DAMAGE.

(1) Obey the fuel tank entry precautions (AMM 28-11-00/201).

S 014-049
(2) Remove the rubber protector from the access opening if one is installed.

S 114-047
(3) Thoroughly clean these surfaces:

NOTE: Use a cotton wiper (BMS15-5) moistened with solvent.

(a) Access door
(b) Access door opening
(c) Sealing surfaces of the access door opening.

S 214-048
(4) Examine the inner wing surface and the wing surface near the access door opening for corrosion.
(a) If you find corrosion, refer to the Structural Repair Manual (SRM 57-20-01).

BOEING PROPRIETARY - Copyright (C) - Unpublished Work - See title page for details.

E. Prepare the Molded Rubber Seal for Installation

S 114-050
(1) Do these steps to clean the molded rubber seal:
(a) Dampen a cotton wiper (BMS15-5) with denatured alcohol.
(b) Lightly wipe the seals with the cotton wiper (BMS15-5).

S 214-051
(2) Examine the molded rubber seal for these signs of deterioration:
(a) Cuts
(b) Delaminations from the access door
(c) Chafing
(d) Flat spots
(e) Any condition which will not let the rubber seal form a fuel-tight seal.
(f) If there is a problem with the molded rubber seal, replace the seal (AMM 28-11-00/801) or the access door.

NOTE: You can remove the rubber seal on all high impact-resistant access doors and all new replacement access doors (Fig. 402).

S 644-052
(3) Apply a thin layer of petrolatum to the molded rubber seal.

NOTE: This will prevent damage to the rubber seal during subsequent access door removal. It will also be easier to remove the access door.

F. Prepare the New Knitted Aluminum Gasket for Installation

S 164-026
(1) Clean the clamp ring with a cotton wiper (BMS 15-5) and solvent.

S 624-027
(2) Make sure both sides of the new gasket is filled with the correct anti-corrosion compound or grease.

NOTE: CDCCL - Refer to the task: Airworthiness Limitation Precautions (AMM 28-00-00/201), for important information on Critical Design Configuration Control Limitations (CDCCLs).

NOTE: This is applicable to Airworthiness Limitation 28-AWL-14.

(a) Do not mix MIL-G-25537 and BMS 3-38.

BOEING PROPRIETARY - Copyright (C) - Unpublished Work - See title page for details.

S 214-028

(3) Do a check of the manufacturing date (shelf-life) information on the replacement gasket container.

(a) If the gasket is more than five years old, do these steps:

1) Remove the anti-corrosion compound or grease from the gasket.

2) Fill the two sides of the gasket with new anti-corrosion compound or grease.

NOTE: CDCCL - Refer to the task: Airworthiness Limitation Precautions (AMM 28-00-00/201), for important information on Critical Design Configuration Control Limitations (CDCCLs).

NOTE: This is applicable to Airworthiness Limitation 28-AWL-14.

(b) If the gasket is less than five years old, it is not necessary to remove the anti-corrosion compound or grease.

S 434-029

(4) Put a new aluminum gasket carrier tray package face up on a flat surface.

S 434-030

(5) Remove the paper cover from the carrier tray.

S 434-031

(6) Since the hole locations are not symmetrical, carefully put the clamp ring over the gasket (countersunk end of holes face up) so that the clamp ring and gasket holes align.

S 434-032

(7) Push the clamp ring on the gasket until the clamp ring firmly touches the gasket.

S 434-033

(8) Remove the clamp ring, gasket, and release strip from the carrier tray as a unit.

BOEING PROPRIETARY - Copyright (C) - Unpublished Work - See title page for details.

S 434-034
(9) Put the unit, gasket side up, on a flat surface.

S 084-035
(10) Remove the release strip from the gasket.

G. Install the Access Door

S 214-054
(1) Make sure the molded rubber seal is installed on the access door.

NOTE: CDCCL - Refer to the task: Airworthiness Limitation Precautions (AMM 28-00-00/201), for important information on Critical Design Configuration Control Limitations (CDCCLs).

NOTE: This is applicable to Airworthiness Limitation 28-AWL-14.

S 624-036
(2) Do not mix MIL-G-25537 and BMS 3-38.

S 624-037

CAUTION: DO NOT APPLY TOO MUCH ANTI-CORROSION COMPOUND OR GREASE TO THE LOWER SURFACE OF THE WING. YOU CAN CAUSE DAMAGE TO THE ACCESS DOOR WITH HYDRAULIC PRESSURE FROM THE ANTI-CORROSION COMPOUND OR GREASE WHEN YOU INSTALL THE MOUNTING BOLTS.

(3) Apply a very thin layer of BMS 3-38 compound (recommended) or MIL-G-25537 grease to the external area of the access opening (the area where the gasket contacts wing skin).

NOTE: Do not mix MIL-G-25537 grease and BMS 3-38 compounds.

S 424-018

CAUTION: MAKE SURE THE ALIGNMENT INSERT ON THE ACCESS DOOR IS ON THE CORRECT SIDE OF THE ACCESS OPENING. FUEL LEAKAGE CAN OCCUR IF THE ACCESS DOOR IS NOT INSTALLED IN THE CORRECT DIRECTION.

(4) Put the access door inside the tank and put it over the opening.

BOEING PROPRIETARY - Copyright (C) - Unpublished Work - See title page for details.

S 424-053
(5) On the surge tank access doors with the pressure relief valve, make sure the alignment insert in the access door is in the same position as the alignment notch in the wing skin.

S 434-007
(6) Set and hold the gasket and clamp ring in the opening of the surge tank.

S 214-055
(7) Make sure the gasket is correctly installed between the outer face of the door and the wing skin.

NOTE: CDCCL - Refer to the task: Airworthiness Limitation Precautions (AMM 28-00-00/201), for important information on Critical Design Configuration Control Limitations (CDCCLs).

NOTE: This is applicable to Airworthiness Limitation 28-AWL-14.

S 434-008
(8) Install the mounting bolts in the clamp ring and the gasket.

S 434-016
(9) Tighten the mounting bolts to 30-40 pound-inches from centerline outboard equally in both directions (Figure 402).

S 864-019
(10) Make sure the pressure relief valve is closed.

S 794-020

WARNING: MAKE SURE YOU INSTALL THE SURGE TANK ACCESS DOORS CORRECTLY. FUEL CAN ENTER THE SURGE TANKS DURING SOME GROUND OR FLIGHT MANEUVERS. IF THE SURGE TANK ACCESS DOOR(S) ARE NOT INSTALLED CORRECTLY, AN OVERBOARD FUEL SPILL CAN OCCUR. AN OVERBOARD FUEL SPILL IS A FIRE HAZARD.

(11) Use one of these methods to check the surge tank access door installation:
- (a) Do a visual check to make sure the access door installation is fluid tight.
- (b) Do a fuel leak check for the surge tank access doors.
  - 1) Do this task: Pressure Fueling System - Overfill Test (AMM 28-21-00/501).

BOEING PROPRIETARY - Copyright (C) - Unpublished Work - See title page for details.

OVERWING FILL PORT - REMOVAL/INSTALLATION

1. General
   A. There are two overwing fill ports, one in each main fuel tank (Fig. 401). Each overwing fill port is found on the upper surface of the wing between Rib No. 23 and Rib No. 24.
   B. This procedure contains two tasks. The first task removes the overwing fill port. The second task installs the overwing fill port.

TASK 28-11-04-004-001

2. Remove the Overwing Fill Port (Fig. 401)
   A. Equipment
      (1) Torque Spanner - ST2580-302
      (2) Maintenance Mats - for wing upper surface
   B. References
      (1) AIPC 28-11-05-01, Fig. 1
      (2) AMM 28-11-00/201, Fuel Tanks (Purging and Entry)
      (3) AMM 28-11-01/401, Main Tank Access Door
      (4) AMM 28-26-00/201, Defueling
   C. Access
      (1) Location Zones
          541 Main Tank (Outboard of Rib No. 10) (Left)
          641 Main Tank (Outboard of Rib No. 10) (Right)

      (2) Access Panels
          541PB Main Tank Access Door (Left)
          641PB Main Tank Access Door (Right)

   D. Procedure

      S 654-010
      (1) Defuel the applicable fuel tank (AMM 28-26-00/201).

      S 654-029

      WARNING: OBEY THE PURGING AND FUEL TANK ENTRY PRECAUTIONS. FAILURE TO OBEY THE PURGING AND FUEL TANK ENTRY PRECAUTIONS CAN CAUSE SERIOUS INJURY OR DEATH TO PERSONS AND CAN CAUSE DAMAGE TO EQUIPMENT.

      (2) Do the Purging and Fuel Tank Entry procedure (AMM 28-11-00/201).

BOEING PROPRIETARY - Copyright (C) - Unpublished Work - See title page for details.

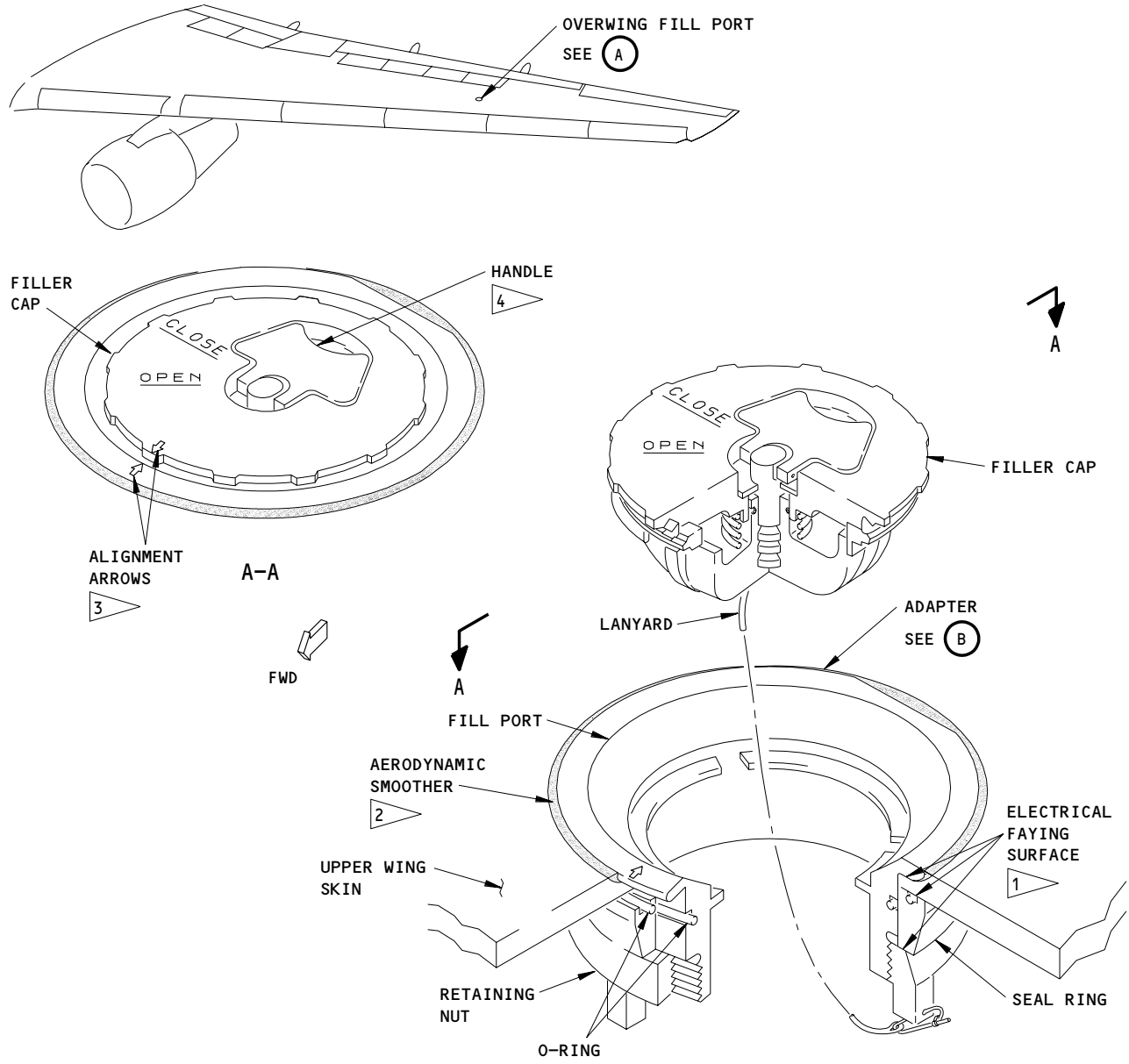

OVERWING FILL PORT
(FILLER CAP SHOWN REMOVED)
A

1 PREPARE THE FAYING SURFACES OF THE RETAINING NUT, SEAL RING, ADAPTER, AND UPPER WING SKIN FOR AN ELECTRICAL FAYING SURFACE BOND (SWPM 20-20-00).

2 FILL CAVITY (FLUSH WITH UPPER SURFACE) AROUND ADAPTER WITH AERODYNAMIC SMOOTHER.

3 MAKE SURE THE ARROW ON THE ADAPTER POINTS IN THE AFT DIRECTION AND THE ARROW ON THE CAP POINTS IN THE FORWARD DIRECTION WITH THE TWO ARROWS IN ALIGNMENT.

4 MAKE SURE THE HANDLE CLOSES IN THE AFT DIRECTION. RAM AIR CAN CAUSE THE HANDLE TO RELEASE IF THE CAP IS INSTALLED IN THE WRONG DIRECTION.

Overwing Fill Port Installation
Figure 401 (Sheet 1)

BOEING PROPRIETARY - Copyright (C) - Unpublished Work - See title page for details.

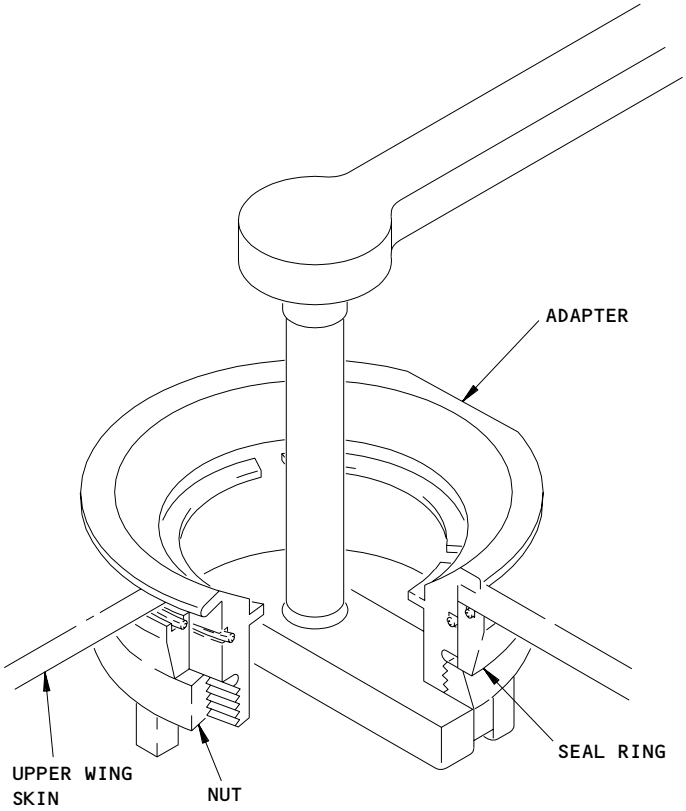

ADAPTER
B

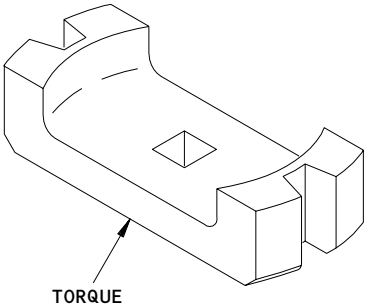

Overwing Fill Port Installation
Figure 401 (Sheet 2)

BOEING PROPRIETARY - Copyright (C) - Unpublished Work - See title page for details.

S 014-011
(3) Remove the left or right main tank access door, 541PB or 641PB (AMM 28-11-01/401).

S 494-013

CAUTION: PUT MAINTENANCE MATS IN THE AREAS WHERE PERSONS WORK. THE MAINTENANCE MATS PREVENT DAMAGE TO THE WING PANELS.

(4) Put maintenance mats in the areas you will work.

S 034-015
(5) Disconnect the filler cap lanyard from the lug on the retaining nut.

S 024-002
(6) Remove the filler cap from the overwing fill port.

S 034-016
(7) Remove the lockwire between the retaining nut and the adapter.

S 034-017
(8) Use the torque spanner and remove the retaining nut from the adapter.

S 034-018
(9) Remove the seal ring from the adapter.
(a) Discard the O-ring.

S 024-030
(10) Carefully remove the aerodynamic smoother from around the adapter.

S 024-003
(11) Lift and remove the adapter through the opening in the upper wing skin.
(a) Discard the O-ring.

TASK 28-11-04-404-019
3. Install the Overwing Fill Port (Fig. 401)
A. Consumable Materials
(1) D00128 Petrolatum -- Technical, VV-P-236
(2) Aerodynamic Smoother (BAC 5030)
B. Equipment
(1) Torque Spanner - ST2580-302
(2) Maintenance Mats - for wing upper surface
C. References
(1) AIPC 28-11-05-01, Fig. 1
(2) AMM 12-11-01/301, Fuel Servicing
(3) AMM 28-11-00/201, Fuel Tanks (Purging and Entry)
(4) AMM 28-11-01/401, Main Tank Access Door
(5) SWPM 20-20-00, Electrical Bonds and Grounds

BOEING PROPRIETARY - Copyright (C) - Unpublished Work - See title page for details.

D. Access

(1) Location Zones

541 Main Tank (Outboard of Rib No. 10) (Left)
641 Main Tank (Outboard of Rib No. 10) (Right)

(2) Access Panels

541PB Main Tank Access Door (Left)
641PB Main Tank Access Door (Right)

E. Procedure

S 434-031

(1) Prepare these faying surfaces for an electrical faying surface bond (SWPM 20-20-00):
   (a) Upper surface of Retaining Nut
   (b) Upper and lower surfaces of Seal Ring
   (c) Lip/flange of Adapter (horizontal surface that mates with upper wing skin)
   (d) Mating surfaces of the upper wing skin adjacent to the adapter (outside the tank) and the seal ring (inside the tank)
   (e) Apply Alodine 600 to the above bared surfaces.

S 434-020

(2) Do these steps to install the O-rings:
   (a) Apply petrolatum to the new O-rings.
   (b) Install a new O-ring in the groove on the adapter.
   (c) Install a new O-ring in the groove on the seal ring.
   (d) Make sure the faying surfaces adjacent to the O-ring groove on the seal ring are free from petrolatum.

S 424-032

CAUTION: MAKE SURE THE ADAPTER AND CAP ARE INSTALLED IN THE CORRECT DIRECTION. IF THE ADAPTER AND CAP ARE NOT INSTALLED IN THE CORRECT DIRECTION, RAM AIR CAN CAUSE THE CAP TO RELEASE DURING FLIGHT.

(3) Put and hold the adapter in the opening in the upper wing skin.
   (a) Make sure the arrow on the adapter points in the aft direction.
   (b) Make sure that the filler cap can be installed in the adapter with the handle locked aft and down (Fig. 401). The arrow on the cap should point in the forward direction and align with the arrow on the adapter.

BOEING PROPRIETARY - Copyright (C) - Unpublished Work - See title page for details.

S 014-004

WARNING: OBEY THE PURGING AND FUEL TANK ENTRY PRECAUTIONS. FAILURE TO OBEY THE PURGING AND FUEL TANK ENTRY PRECAUTIONS CAN CAUSE SERIOUS INJURY OR DEATH TO PERSONS AND CAN CAUSE DAMAGE TO EQUIPMENT.

(4) Obey the purging and fuel tank entry precautions (AMM 28-11-00/201).

S 434-022
(5) Put the seal ring on the adapter.

S 434-006
(6) Install the retaining nut onto the adapter with the torque spanner.
(a) Tighten the retaining nut to 30-40 foot-pounds (41-54 newton-meters).

S 434-033
(7) Measure the bonding resistance across these surfaces:

NOTE: The resistance across each bond must not be more than 0.010 ohm (10 milliohms).

(a) Retaining nut and airplane structure (inside the tank)
(b) Adapter and airplane structure (outside the tank).

S 434-023
(8) Install lockwire between the lug on the retaining nut and the adapter.

S 434-024
(9) Attach the lanyard on the filler cap to the lug on the retaining nut.

S 434-034
(10) Do the Prepare to Go Out of and Close the Fuel Tank procedure (AMM 28-11-00/201).

S 434-035
(11) Apply aerodynamic smoother (BAC 5030) around the periphery of the adapter.

NOTE: Make sure the aerodynamic smoother is flush with the upper surface of the wing skin.

BOEING PROPRIETARY - Copyright (C) - Unpublished Work - See title page for details.

S 424-036

WARNING: MAKE SURE THE FILLER CAP IS FULLY CLOSED. IF THE FILLER CAP IS NOT FULLY CLOSED, FUEL CAN LEAK THROUGH THE FILL PORT IN FLIGHT.

(12) Install and fully close the filler cap on the overwing fill port.

S 094-007
(13) Remove the maintenance mats.

S 654-027
(14) Refuel the fuel tank (AMM 12-11-01/301).

S 214-009
(15) Make sure there are no fuel leaks.

BOEING PROPRIETARY - Copyright (C) - Unpublished Work - See title page for details.

OVERWING FILL PORT - INSPECTION/CHECK

1. General
   A. There are two overwing fill ports, one in each main fuel tank (Fig. 401). Each overwing fill port is found on the upper surface of the wing between Rib No. 23 and Rib No. 24.
   B. This procedure contains a task to do a bonding resistance check of the Overwing Fill Port.

TASK 28-11-04-766-029

2. Overwing Fill Port - Bonding Resistance Check (Fig. 601)
   A. Equipment
      (1) Maintenance Mats - for wing upper surface
      (2) Bonding Meter - Use one of these:
         (a) Bonding Meter - T477W
             Avtron Manufacturing Co.
             Cleveland, OH
         (b) Bonding Meter - Model M1
             (Serial Number A000012 and subsequent)
             BCD Electronics Ltd.
             Vancouver, Canada
   B. References
      (1) SWPM 20-20-00, Electrical Bonds and Grounds
   C. Access
      (1) Location Zones
          541 Main Tank (Outboard of Rib No. 10) (Left)
          641 Main Tank (Outboard of Rib No. 10) (Right)

   D. Procedure

      S 496-005

      CAUTION: PUT MAINTENANCE MATS IN THE AREAS WHERE PERSONS WORK. THE MAINTENANCE MATS PREVENT DAMAGE TO THE WING PANELS.

      (1) Put maintenance mats in the areas you will work.

      S 766-030
      (2) Measure the electrical bonding resistance between the overwing fill port adapter and the upper wing skin (SWPM 20-20-00).
         (a) Make sure the electrical bonding resistance is 0.010 ohm (10 milliohms) or less.

      S 026-031
      (3) Remove the maintenance mats.

BOEING PROPRIETARY - Copyright (C) - Unpublished Work - See title page for details.

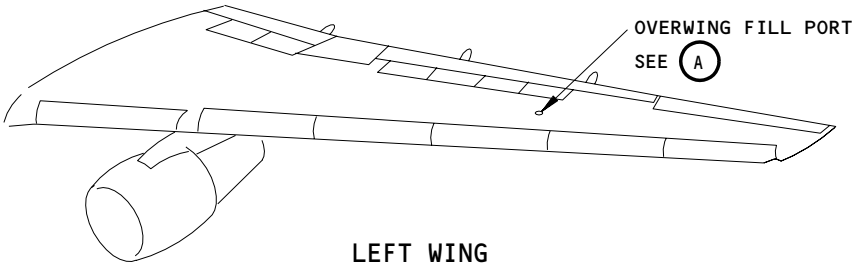

LEFT WING
(RIGHT WING IS OPPOSITE)

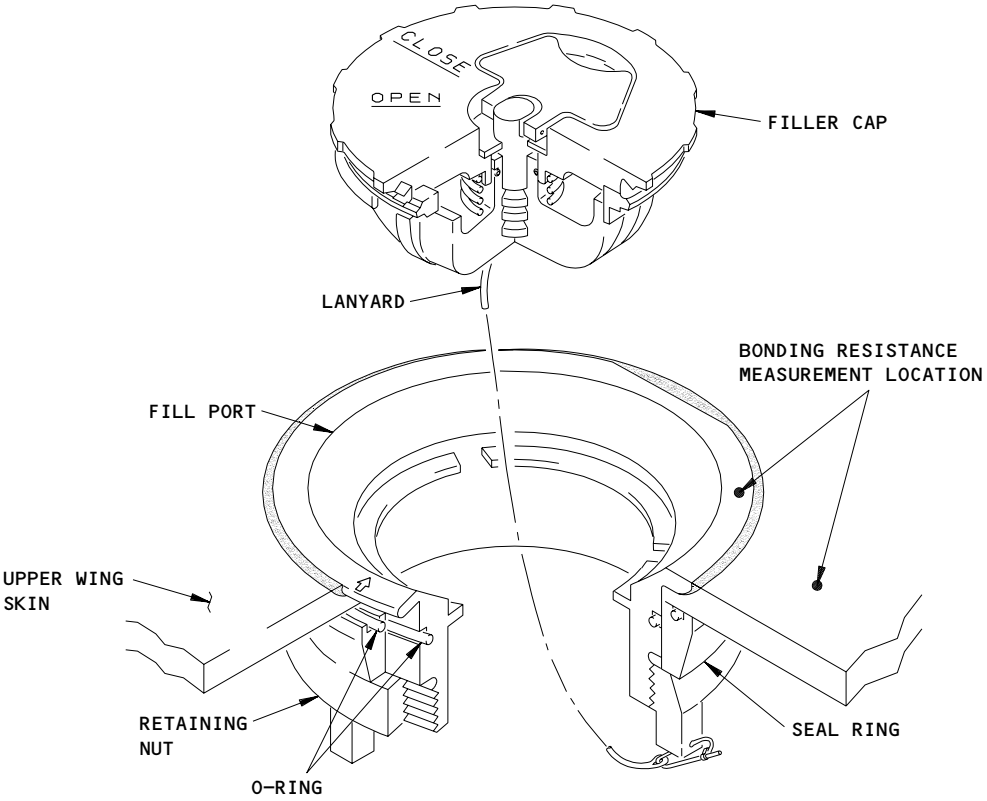

OVERWING FILL PORT
(FILLER CAP SHOWN REMOVED)

A

Overwing Fill Port Inspection
Figure 601

BOEING PROPRIETARY - Copyright (C) - Unpublished Work - See title page for details.

FUEL SUMP DRAIN VALVE - REMOVAL/INSTALLATION

1. General
   A. A sump drain valve is installed at the low point of each fuel tank and surge tank. The sump drain valve drains water collected in the fuel tanks and drains the fuel left in the fuel tanks after defueling.
   B. This procedure contains four tasks. The first task removes the sump drain valve. The second task installs the sump drain valve. The third task removes the primary poppet of the sump drain valve. The fourth task installs the primary poppet of the sump drain valve.

TASK 28-11-05-004-010

2. Remove the Sump Drain Valve (Fig. 401)
   A. General
      (1) It is necessary to have two persons to remove the sump drain valve.
   B. Equipment
      (1) Spanner Wrench - A28012-1 (Recommended),
                A28010-1, -2 (Optional)
      (2) Adapter, Center Tank - B28001-5
   C. References
      (1) AMM 06-41-00/201, Fuselage Access Doors and Panels
      (2) AMM 28-11-00/201, Fuel Tanks (Purging and Entry)
      (3) AMM 28-11-01/401, Main Tank Access Door
      (4) AMM 28-11-02/401, Auxiliary Tank Access Door
      (5) AMM 28-11-03/401, Surge Tank Access Door
      (6) AMM 28-11-07/401, Fuel Tank Baffle Door
      (7) AMM 28-26-00/201, Defueling
   D. Access
      (1) Location Zones

136	Environmental Control System Bay (Right)
193	Wing to Body - Forward Lower Half (Left)
194	Wing to Body - Forward Lower Half (Right)
531	Center Auxiliary Tank (Left)
532	Main Tank - Inboard of Rib No. 10 (Left)
542	Surge Tank (Left)
631	Center Auxiliary Tank (Right)
632	Main Tank - Inboard of Rib No. 10 (Right)
642	Surge Tank (Right)

BOEING PROPRIETARY - Copyright (C) - Unpublished Work - See title page for details.

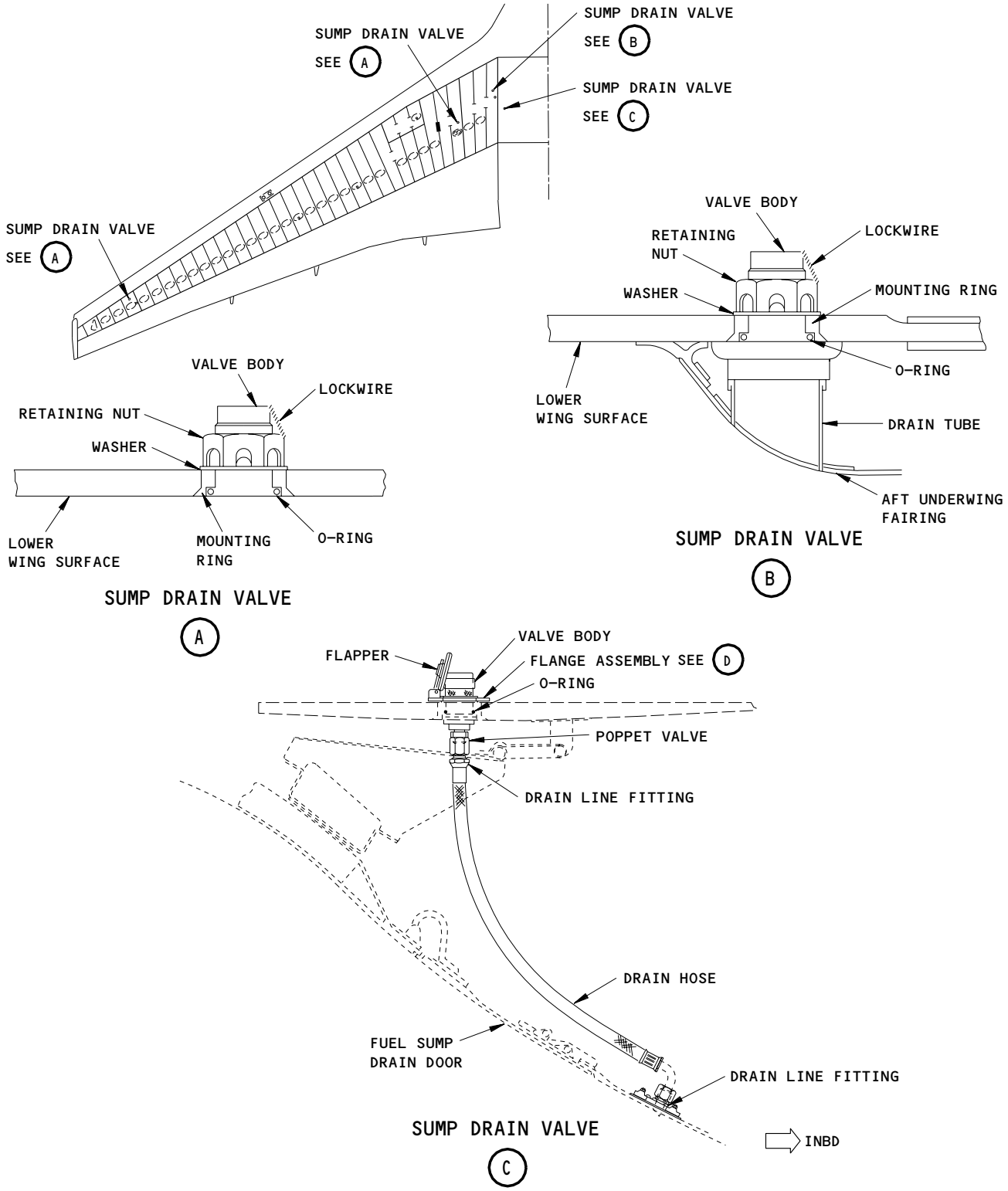

Sump Drain Valve Installation
Figure 401 (Sheet 1)

BOEING PROPRIETARY - Copyright (C) - Unpublished Work - See title page for details.

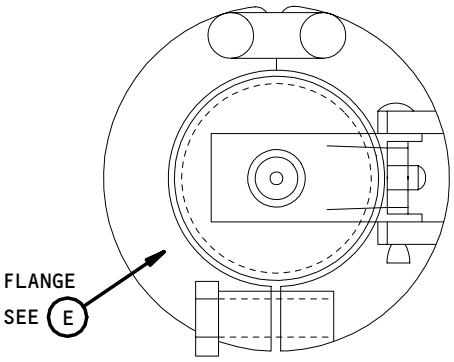

FLANGE ASSEMBLY

D

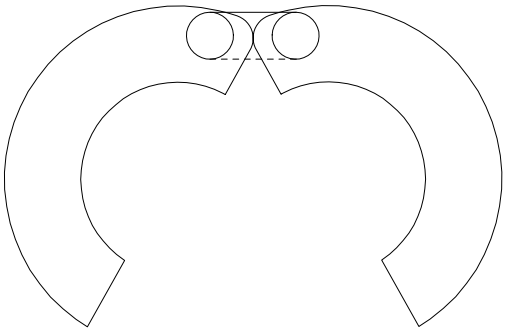

FLANGE (OPEN POSITION)

E

Sump Drain Valve Installation
Figure 401 (Sheet 2)

BOEING PROPRIETARY - Copyright (C) - Unpublished Work - See title page for details.

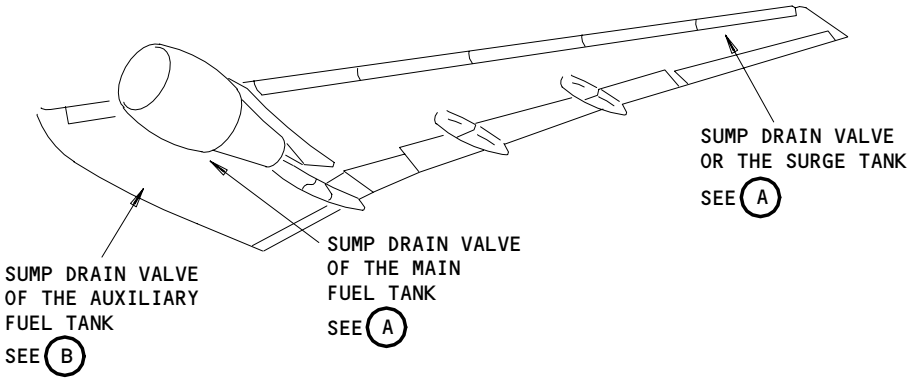

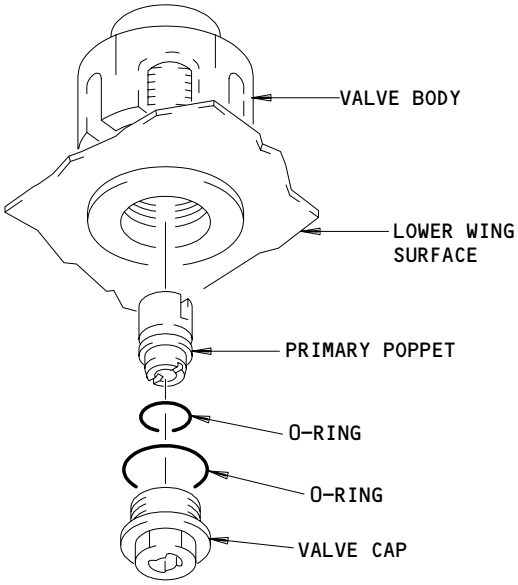

SUMP DRAIN VALVE OF THE MAIN
FUEL TANK OR SURGE TANK
A

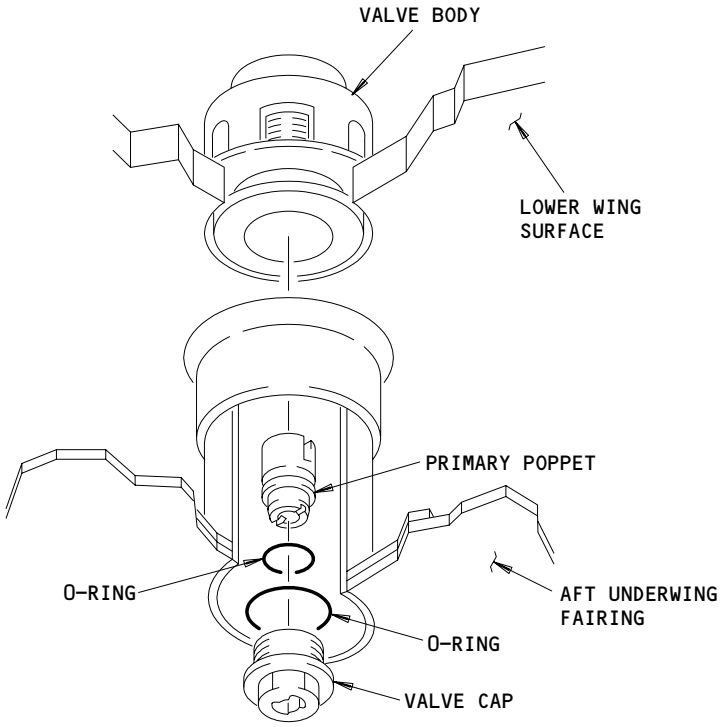

SUMP DRAIN VALVE OF THE AUXILIARY FUEL TANK
B

Primary Poppet of the Sump Drain Valve Installation
Figure 402

BOEING PROPRIETARY - Copyright (C) - Unpublished Work - See title page for details.

(2) Access Panels

136KZ	Auxiliary Tank Access Door (Center)
193SLX	Fuel Sump Drain Door (Left)
194HR	Pressure Relief Door (Right)
194QRX	Fuel Sump Drain Door (Right)
531BB	Auxiliary Tank Access Door (Left)
532AZ	Fuel Tank Baffle Door (Left)
532BB	Main Tank Access Door (Left)
542AB	Surge Tank Access Door (Left)
631BB	Auxiliary Tank Access Door (Right)
632AZ	Fuel Tank Baffle Door (Right)
632BB	Main Tank Access Door (Right)
642AB	Surge Tank Access Door (Right)

E. Remove the Sump Drain Valve in the Main Fuel Tanks, Surge Tanks or the Left or Right Auxiliary Fuel Tank

S 654-001
(1) Defuel the applicable fuel tank (AMM 28-26-00/201).

S 654-018
(2) Drain and purge the applicable fuel tank (AMM 28-11-00/201).

S 014-015
(3) For the sump drain valve in the left or right main fuel tank, remove the left or right main tank access door, 532BB or 632BB (AMM 28-11-01/401).

S 014-014
(4) For the sump drain valve in the left or right surge tank, remove the left or right surge tank access door, 542AB or 642AB (AMM 28-11-03/401).

S 014-013
(5) For the sump drain valve in the left or right auxiliary fuel tank, remove the left or right auxiliary tank access door, 531BB or 631BB (AMM 28-11-02/401).

S 014-012
(6) For the sump drain valve in the left or right auxiliary fuel tank, remove the left or right aft underwing fairing panel, 193PL or 194ML (AMM 06-41-00/201).

S 944-019

WARNING: OBEY THE FUEL TANK ENTRY PRECAUTIONS. FAILURE TO OBEY THE FUEL TANK ENTRY PRECAUTIONS COULD CAUSE INJURY OR DAMAGE.

(7) Obey the fuel tank entry precautions (AMM 28-11-00/201).

BOEING PROPRIETARY - Copyright (C) - Unpublished Work - See title page for details.

S 014-040
(8) For the sump drain valve in the left or right main fuel tank, remove the left or right baffle door, 532AZ or 632AZ, inside the fuel tank to get access to the sump drain valve (AMM 28-11-07/401).

S 034-003
(9) Go into the fuel tank and remove the lockwire between the retaining nut and the valve body.

S 494-004
(10) Install the spanner wrench on the mounting ring of the sump drain valve from out of the fuel tank.

S 024-005
(11) Remove the retaining nut and the washer from in the fuel tank.

S 024-006
(12) Remove the valve body and the mounting ring through the opening hole in the wing lower surface.

F. Remove the Sump Drain Valve in the Left Center or Right Center Auxiliary Fuel Tank

S 014-021
(1) Open the applicable left or right fuel sump drain door, 193SLX or 194QRX (AMM 06-41-00/201).

S 034-022
(2) Disconnect the drain line from the poppet valve of the fuel tank sump.

S 024-023
(3) Use the adapter, B28001-5, to remove the valve body from the lower surface of the wing.

S 024-024
(4) To remove the flapper of the sump drain valve, do the steps that follow:
(a) Defuel the auxiliary fuel tank (AMM 28-26-00/201).
(b) Drain and purge the auxiliary fuel tank (AMM 28-11-00/201).
(c) Open the pressure relief door, 194HR (AMM 06-41-00/201).

WARNING: OBEY THE FUEL TANK ENTRY PRECAUTIONS (AMM 28-11-00/201). FAILURE TO OBEY THE FUEL TANK ENTRY PRECAUTIONS COULD CAUSE INJURY TO PERSONS OR DAMAGE TO EQUIPMENT.

(d) Obey the fuel tank entry precautions (AMM 28-11-00/201).
(e) Remove the center auxiliary tank access door, 136KZ (AMM 28-11-02/401).
(f) Remove the screw to open the flange on the sump drain valve.
(g) Remove the flange with the flapper attached.

BOEING PROPRIETARY - Copyright (C) - Unpublished Work - See title page for details.

TASK 28-11-05-404-007

3. Install the Sump Drain Valve (Fig. 401)
   A. General
      (1) It is necessary to have two persons to install the sump drain valve.
   B. Equipment
      (1) Spanner Wrench - A28012-1 (Recommended),
                A28010-1, -2 (Optional)
      (2) Adapter, Center Tank - B28001-5
   C. Consumable Materials
      (1) G02353 - Petrolatum grease (VV-P-236)
   D. References
      (1) AMM 06-41-00/201, Fuselage Access Doors and Panels
      (2) AMM 12-11-01/301, Fuel Tank Pressure Fueling
      (3) AMM 20-10-23/401, Lockwires
      (4) AMM 28-11-00/201, Fuel Tanks (Purging and Entry)
      (5) AMM 28-11-01/401, Main Tank Access Door
      (6) AMM 28-11-02/401, Auxiliary Tank Access Door
      (7) AMM 28-11-03/401, Surge Tank Access Door
      (8) AMM 28-11-07/401, Fuel Tank Baffle Door
   E. Access
      (1) Location Zones

136	Environmental Control System Bay (Right)
193	Wing to Body - Forward Lower Half (Left)
194	Wing to Body - Forward Lower Half (Right)
531	Center Auxiliary Tank (Left)
532	Main Tank - Inboard of Rib No. 10 (Left)
542	Surge Tank (Left)
631	Center Auxiliary Tank (Right)
632	Main Tank - Inboard of Rib No. 10 (Right)
642	Surge Tank (Right)

      (2) Access Panels

136KZ	Auxiliary Tank Access Door (Center)
193SLX	Fuel Sump Drain Door (Left)
194HR	Pressure Relief Door (Right)
194QRX	Fuel Sump Drain Door (Right)
531BB	Auxiliary Tank Access Door (Left)
532AZ	Fuel Tank Baffle Door (Left)
532BB	Main Tank Access Door (Left)
542AB	Surge Tank Access Door (Left)
631BB	Auxiliary Tank Access Door (Right)
632AZ	Fuel Tank Baffle Door (Right)
632BB	Main Tank Access Door (Right)
642AB	Surge Tank Access Door (Right)

   F. Install the Sump Drain Valve in the Main Fuel Tanks, Surge Tanks or Left or Right Auxiliary Tank

BOEING PROPRIETARY - Copyright (C) - Unpublished Work - See title page for details.

S 944-020

WARNING: OBEY THE FUEL TANK ENTRY PRECAUTIONS (AMM 28-11-00/201). FAILURE TO OBEY THE FUEL TANK ENTRY PRECAUTIONS CAN CAUSE INJURY OR DAMAGE.

(1) Obey the fuel tank entry precautions (AMM 28-11-00/201).

S 214-016
(2) Make sure the seal areas of the sump drain valve and the wing lower surface are clean and not damaged.

S 644-036
(3) Put a thin layer of petrolatum grease on the new O-ring.

S 434-015
(4) Install a new O-ring on the sump drain valve.

S 424-014
(5) Put and hold the valve body and the mounting ring in the opening of the wing lower surface.

S 494-013
(6) Install and hold the spanner wrench on the valve body and the mounting ring external to the fuel tank.

S 434-012
(7) Go into the fuel tank and install the washer and the retaining nut on the valve body.

S 434-017
(8) Tighten the retaining nut to 168-192 pound-inches (19.0-21.6 newton-meters).

S 094-011
(9) Remove the spanner wrench from the valve body and the mounting ring.

S 434-010
(10) Install lockwire between the retaining nut and the valve body (AMM 20-10-23/401).

BOEING PROPRIETARY - Copyright (C) - Unpublished Work - See title page for details.

S 414-041
(11) For the left or right main fuel tanks, install the left or right baffle door, 532AZ or 632AZ, inside the tank (AMM 28-11-07/401).

S 414-021
(12) For the left or right main fuel tanks, install the left or right main tank access door, 532BB or 632BB (AMM 28-11-01/401).

S 414-020
(13) For the left or right surge tank, install the left or right surge tank access door, 542AB or 642AB (AMM 28-11-03/401).

S 414-019
(14) For the left or right auxiliary fuel tank, install the left or right auxiliary tank access door, 531BB or 631BB (AMM 28-11-02/401).

S 414-018
(15) For the left or right auxiliary fuel tank, install the left or right aft underwing fairing panel, 193PL or 194ML (AMM 06-41-00/201).

S 654-009
(16) Refuel the applicable fuel tank (AMM 12-11-01/301).

S 214-022
(17) Make sure there are no fuel leaks.

S 684-008
(18) Drain a small quantity of fuel from the applicable fuel tank to make sure the sump drain valve operates correctly.

G. Install the Sump Drain Valve in the Left Center or Right Center Auxiliary Fuel Tank

S 424-025
(1) To install the flapper of the sump drain valve, do the steps that follow:

WARNING: OBEY THE FUEL TANK ENTRY PRECAUTIONS (AMM 28-11-00/201). FAILURE TO OBEY THE FUEL TANK ENTRY PRECAUTIONS COULD CAUSE INJURY TO PERSONS OR DAMAGE TO EQUIPMENT.

(a) Obey the fuel tank entry precautions (AMM 28-11-00/201).
(b) Make sure the areas of the sump drain valve and the lower surface of the fuel tank that touch are clean and not damaged.
(c) Put the flange of the sump drain valve in the groove of the lower surface of the fuel tank.
(d) Install the screw to close the flange and flapper.
1) Tighten the screw to a torque of 16-18 pound-inches (1.9-2.0 newton-meters).
(e) Install the center auxiliary tank access door, 136KZ (AMM 28-11-02/401).

BOEING PROPRIETARY - Copyright (C) - Unpublished Work - See title page for details.

(f) Install the right pressure relief door, 194HR (AMM 06-41-00/201).

S 644-037
(2) Put a thin layer of petrolatum grease on the new O-ring.

S 434-026
(3) Install a new O-ring on the sump drain valve.

S 424-027
(4) Use the adapter, B28001-5, to install the valve body on the lower surface of the fuel tank.

S 434-032
(5) Tighten the valve body to 200 pound-inches (22.6 newton-meters).

S 434-033
(6) Connect the drain line to the drain valve.

S 654-034
(7) Refuel the center auxiliary fuel tank (AMM 12-11-01/301).

S 214-035
(8) Make sure there are no fuel leaks.

S 684-030
(9) Drain a small quantity of fuel from the applicable sump drain to make sure the sump drain valve operates correctly.

S 414-031
(10) Install the applicable left or right fuel sump drain door, 193SLX or 194QRX (AMM 06-41-00/201).

TASK 28-11-05-004-023
4. Remove the Primary Poppet of the Sump Drain Valve (Fig. 402)
A. Access
(1) Location Zones

193	Wing to Body - Forward Lower Half (Left)
194	Wing to Body - Forward Lower Half (Right)
532	Main Tank - Inboard of Rib No. 10 (Left)
542	Surge Tank (Left)
632	Main Tank - Inboard of Rib No. 10 (Right)
642	Surge Tank (Right)

B. Procedure

S 014-009
(1) Get access to the primary poppet of the sump drain valve.

BOEING PROPRIETARY - Copyright (C) - Unpublished Work - See title page for details.

S 034-008
(2) Use a 5/8 inch socket wrench to remove the valve cap and the O-ring from the valve body.

S 024-007
(3) Remove the primary poppet and the O-ring from the valve body.

TASK 28-11-05-404-006
5. Install the Primary Poppet of the Sump Drain Valve (Fig. 402)
A. Consumable Materials
(1) G02353 - Petrolatum grease (VV-P-236)
B. References
(1) AMM 20-10-19/401, O-rings
C. Access
(1) Location Zones

193	Wing to Body - Forward Lower Half (Left)
194	Wing to Body - Forward Lower Half (Right)
532	Main Tank - Inboard of Rib No. 10 (Left)
542	Surge Tank (Left)
632	Main Tank - Inboard of Rib No. 10 (Right)
642	Surge Tank (Right)

D. Procedure

S 644-038
(1) Put a thin layer of petrolatum grease on the new O-ring.

S 434-005
(2) Install a new O-ring on the primary poppet (AMM 20-10-19/401).

S 424-004
(3) Install the primary poppet in the valve body and align with the secondary poppet.

NOTE: A small quantity of fuel leakage can occur.

S 644-039
(4) Put a thin layer of petrolatum grease on the new O-ring.

S 424-003
(5) Install a new O-ring on the valve cap (AMM 20-10-19/401).

BOEING PROPRIETARY - Copyright (C) - Unpublished Work - See title page for details.

S 424-028

CAUTION: DO NOT TIGHTEN THE VALVE CAP TO A TORQUE OF MORE THAN 120 POUND-INCHES (13.5 NEWTON-METERS). TOO MUCH TORQUE ON THE VALVE CAP CAUSES THE VALVE BODY TO LOOSEN. THIS CAN CAUSE FUEL LEAKAGE.

(6) Use a 5/8 inch socket wrench to install the valve cap in the valve body.
   (a) Tighten the valve cap to a torque of 96-120 pound-inches (10.8-13.5 newton-meters).

BOEING PROPRIETARY - Copyright (C) - Unpublished Work - See title page for details.

ENGINE DRY BAY ACCESS DOOR - REMOVAL/INSTALLATION

1. General
   A. Each engine dry bay has one access door found in the wing lower skin (between ribs 6 and 9 in the forward part of the fuel tank). Each door is elliptical in shape with maximum dimensions of 10 x 18 inches.
   B. This procedure has two tasks. The first task removes the engine dry bay access door. The second task installs the engine dry bay access door.
   C. BMS3-38 is now the recommended anticorrosion compound for access door gasket installations. BMS3-38 lists an anticorrosion compound, Cor-Ban 27L, with improved corrosion protection between the access door, mesh gasket and wing surfaces. Anticorrosion compound, MIL-G-25537 (Aeroshell No. 14), can still be used for access door gaskets, but should be replaced with BMS3-38 as soon as practical.
   D. Do not mix the anti-corrosion compound and grease, BMS 3-38 and MIL-G-25537. If you replaced MIL-G-25537 filled gasket with BMS 3-38 filled gasket, remove all MIL-G-25537 grease from the clamp ring and the access door structure on the airplane.

TASK 28-11-06-004-001

2. Remove the Engine Dry Bay Access Door (Fig. 401)
   A. References
      (1) AMM 28-11-00/201, Fuel Tanks
   B. Access
      (1) Location Zones
          533 Inboard Dry Bay (Left)
          633 Inboard Dry Bay (Right)

      (2) Access Panels
          533AB Engine Dry Bay Access Door (Left)
          633AB Engine Dry Bay Access Door (Right)

   C. Procedure

      S 914-003

      WARNING: OBEY THE FUEL TANK ENTRY PRECAUTIONS. FAILURE TO OBEY THE FUEL TANK ENTRY PRECAUTIONS CAN CAUSE INJURY OR DAMAGE.

      (1) Obey the fuel tank entry precautions (AMM 28-11-00/201).

      S 034-004
      (2) Hold the clamp ring and remove the mounting bolts.

      S 034-005
      (3) Remove the clamp ring and the gasket.
          (a) Discard the gasket.

BOEING PROPRIETARY - Copyright (C) - Unpublished Work - See title page for details.

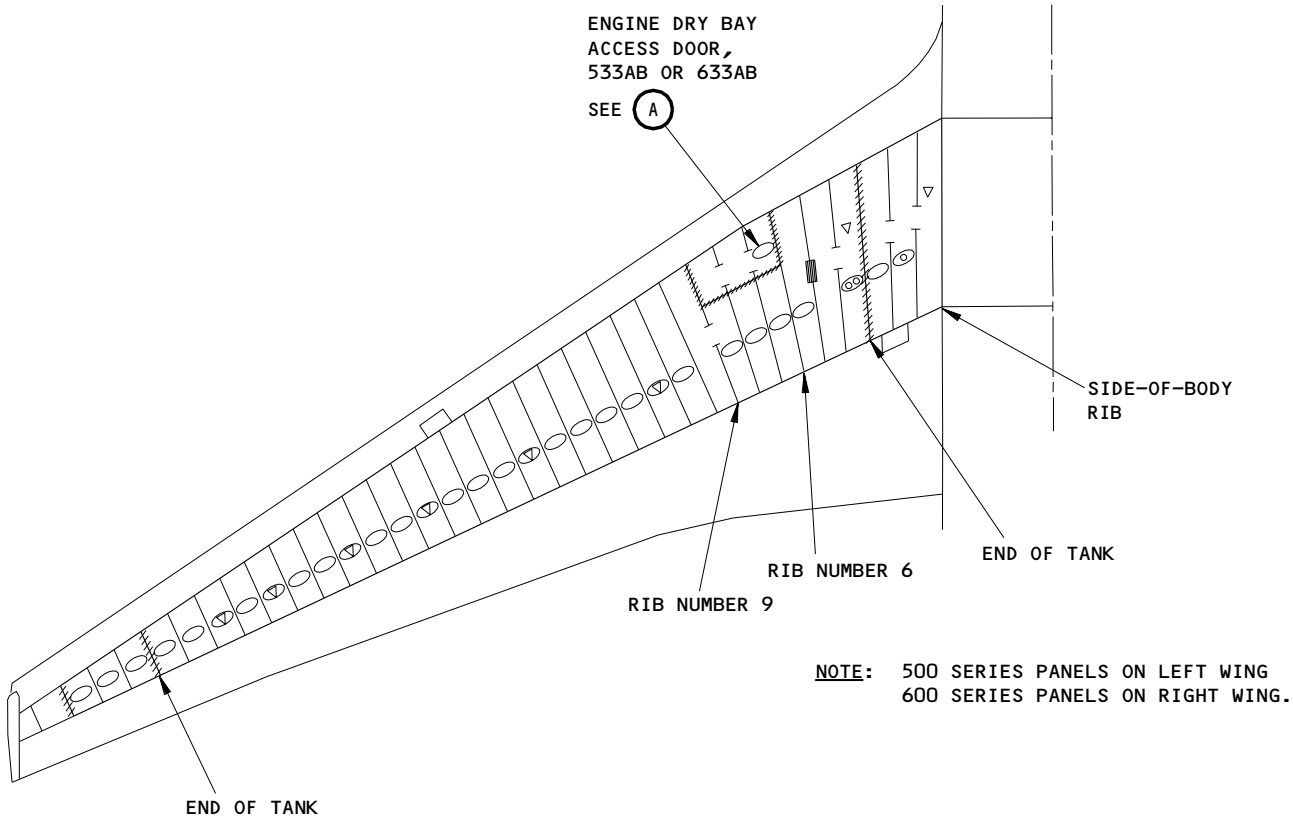

NOTE: 500 SERIES PANELS ON LEFT WING
600 SERIES PANELS ON RIGHT WING.

1 APPLY A THIN LAYER 0.010 TO 0.015 INCH (0.254 TO 0.381 mm) OF GREASE TO THE LOWER SURFACE OF THE WING SKIN THAT TOUCHES THE ALUMINUM GASKET. (REFER TO THE TEXT)

Engine Dry Bay Access Door Installation
Figure 401 (Sheet 1)

BOEING PROPRIETARY - Copyright (C) - Unpublished Work - See title page for details.

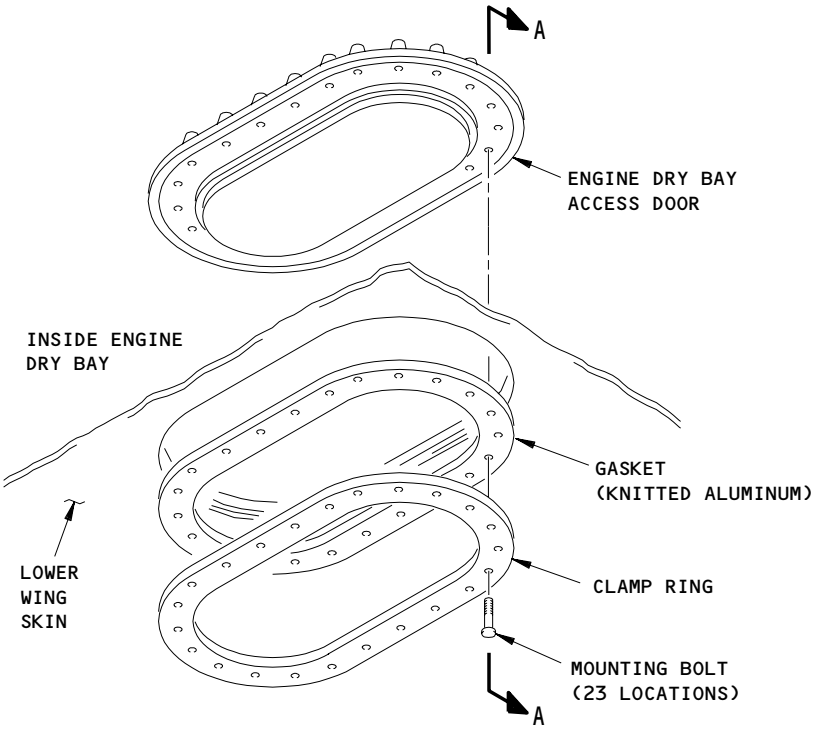

ENGINE DRY BAY ACCESS DOOR,
533AB OR 633AB

A

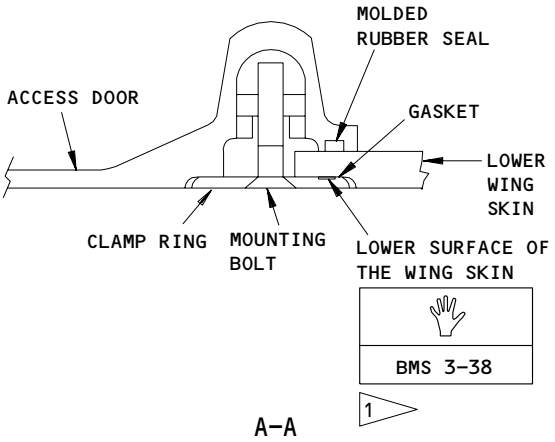

A-A

Engine Dry Bay Access Door Installation
Figure 401 (Sheet 2)

BOEING PROPRIETARY - Copyright (C) - Unpublished Work - See title page for details.

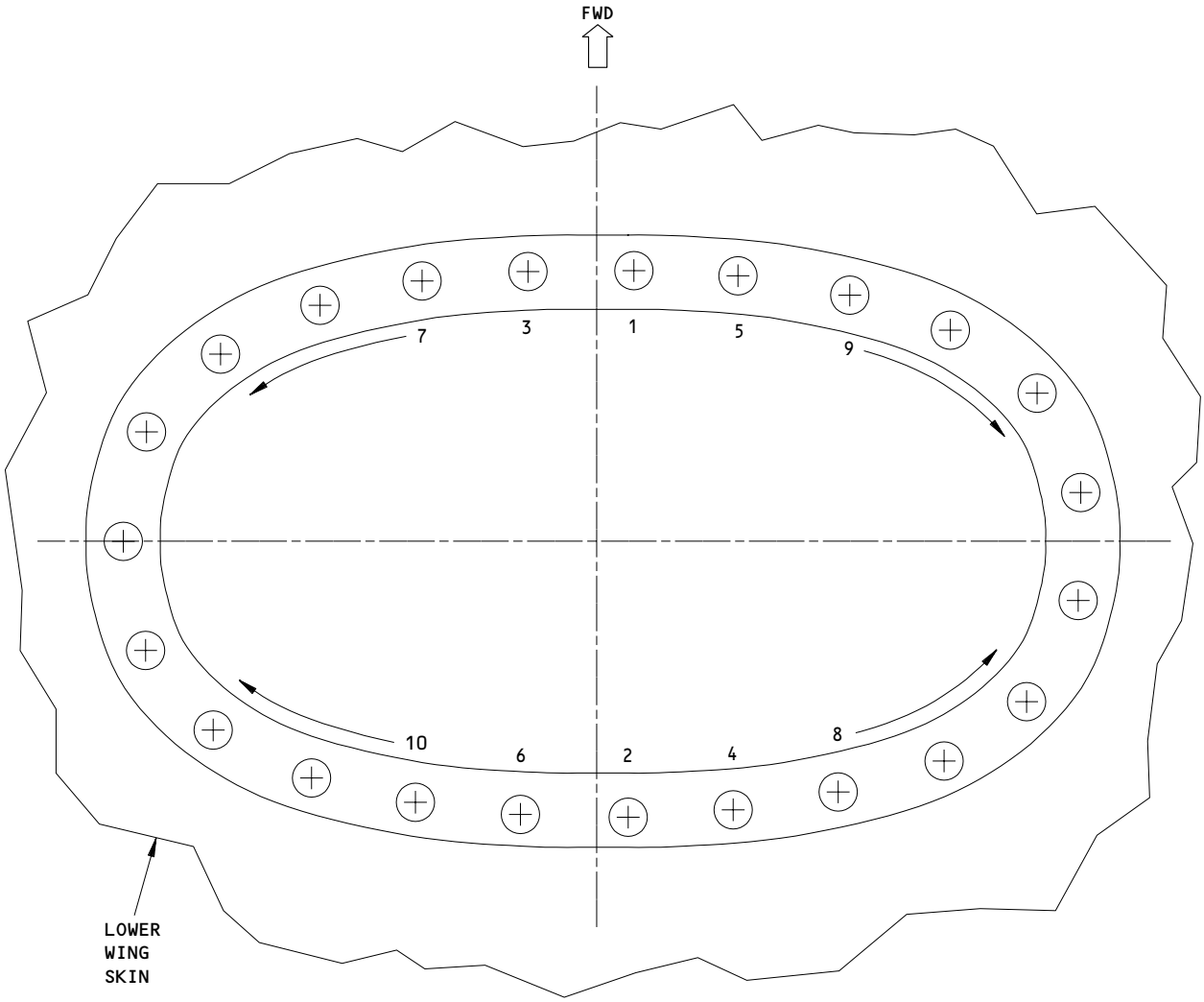

NOTE: TORQUE THE MOUNT BOLTS IN THE SEQUENCE SHOWN BY THE NUMBERS. THIS WILL MAKE SURE FUEL DOES NOT LEAK AROUND THE ACCESS DOOR.

Access Door Mount Bolt Torque Pattern
Figure 402

BOEING PROPRIETARY - Copyright (C) - Unpublished Work - See title page for details.

S 024-006

CAUTION: DO NOT USE A LEVER ON (PRY) THE ENGINE DRY BAY ACCESS DOOR. IF THE ENGINE DRY BAYSURGE TANK ACCESS DOOR DOES NOT MOVE FREELY, USE A RUBBER MALLET AND HIT LIGHTLY AROUND THE ENGINE DRY BAY ACCESS DOOR. IF YOU ARE NOT CAREFUL, SCRATCHES OR DAMAGE TO THE SEAL SURFACE CAN OCCUR.

(4) Push up on the engine dry bay access door.

S 024-007

(5) Remove the engine dry bay access door from the engine dry bay.

TASK 28-11-06-404-008

3. Install the Engine Dry Bay Access Door (Fig. 401)

A. Consumable Materials

(1) Anti-corrosion Compound - Use one of these (BMS3-38 recommended):

(a) G50237 Non-drying Corrosion Inhibiting Compound, BMS3-38

(b) D00020 Grease, Anti-corrosion - Aero Shell No. 14 (AMM 20-30-03/201)

(2) G00034 Cotton Wiper, Process Cleaning Absorbent Wiper (cheesecloth, gauze) BMS15-5

B. References

(1) AMM 28-11-00/201, Fuel Tanks

C. Access

(1) Location Zones

533 Inboard Dry Bay (Left)
633 Inboard Dry Bay (Right)

(2) Access Panels

533AB Engine Dry Bay Access Door (Left)
633AB Engine Dry Bay Access Door (Right)

D. Procedure

S 914-009

WARNING: OBEY THE FUEL TANK ENTRY PRECAUTIONS. FAILURE TO OBEY THE FUEL TANK ENTRY PRECAUTIONS CAN CAUSE INJURY OR DAMAGE.

(1) Obey the fuel tank entry precautions (AMM 28-11-00/201).

S 214-010

(2) Make sure the seal surfaces on the engine dry bay access door and the wing skin are clean.

BOEING PROPRIETARY - Copyright (C) - Unpublished Work - See title page for details.

S 214-011
(3) Make sure the molded rubber seal in the engine dry bay access door is clean and not damaged.

S 434-012
(4) Put the engine dry bay access door in the opening of the engine dry bay.

S 424-013

CAUTION: MAKE SURE THE ALIGNMENT INSERT ON THE ACCESS DOOR IS ON THE CORRECT SIDE OF THE ACCESS OPENING.

(5) On the engine dry bay access doors, make sure the alignment insert in the access door is in the same position as the alignment notch in the wing skin.

E. Prepare the New Knitted Aluminum Gasket for Installation

S 164-020
(1) Clean the clamp ring with a cotton wiper (BMS 15-5) and solvent.

S 624-021
(2) Make sure that both sides of the new gasket is filled with the correct anti-corrosion compound.
(a) Do not mix MIL-G-25537 and BMS3-38 anti-corrosion compounds.

S 214-022
(3) Do a check of the manufacturing date (shelf-life) information on the replacement gasket container.
(a) If the gasket is more than five years old, do these steps:
1) Remove the old anti-corrosion compound from the gasket.
2) Refill the gasket with new anti-corrosion compound.
(b) If the gasket is less than five years old, it is not necessary to remove the old anti-corrosion compound.

BOEING PROPRIETARY - Copyright (C) - Unpublished Work - See title page for details.

S 434-023
(4) Put a new aluminum gasket carrier tray package face up on a flat surface.

S 434-024
(5) Remove the paper cover from the carrier tray.

S 434-025
(6) Since the hole locations are not symmetrical, carefully put the clamp ring over the gasket (countersunk end of holes face up) so that the clamp ring and gasket holes align.

S 434-026
(7) Push the clamp ring on the gasket until the clamp ring firmly touches the gasket.

S 434-027
(8) Remove the clamp ring, gasket, and release strip from the carrier tray as a unit.

S 434-028
(9) Put the unit, gasket side up, on a flat surface.

S 084-029
(10) Remove the release strip from the gasket.

F. Install the Access Door

S 624-030
(1) Do not mix MIL-G-25537 and BMS3-38 anti-corrosion compounds.

S 624-031

CAUTION: DO NOT APPLY TOO MUCH GREASE TO THE LOWER SURFACE OF THE WING. YOU CAN CAUSE DAMAGE TO THE ACCESS DOOR WITH HYDRAULIC PRESSURE FROM THE GREASE WHEN YOU INSTALL THE MOUNTING BOLTS.

(2) Apply a very thin layer of BMS 3-38 compound (recommended) or MIL-G-25537 grease to the external area of the access opening (the area where the gasket contacts wing skin).

BOEING PROPRIETARY - Copyright (C) - Unpublished Work - See title page for details.

S 434-032
(3) Put the access door inside the tank and put it over the opening.

S 434-033
(4) Set and hold the gasket and clamp ring in the opening of the engine dry bay.

S 434-034
(5) Install the mounting bolts in the clamp ring and the gasket.

S 434-039
(6) Tighten the mounting bolts to 30-40 inch-pounds (3.4-4.5 Nm) from centerline outboard equally in both directions (Fig. 402).

S 214-038
(7) Do a visual check to make sure the access door installation is installed correctly.

BOEING PROPRIETARY - Copyright (C) - Unpublished Work - See title page for details.

FUEL TANK BAFFLE DOOR - REMOVAL/INSTALLATION

1. General
   A. A fuel tank baffle door is installed in rib 5 of each main fuel tank. The fuel tank baffle door gives access through the rib and does not let fuel move outboard.
   B. This procedure contains two tasks. The first task removes the fuel tank baffle door. The second task installs the fuel tank baffle door.

TASK 28-11-07-004-001

2. Remove the Fuel Tank Baffle Door (Fig. 401)
   A. References
      (1) AMM 28-11-00/201 Fuel Tanks
      (2) AMM 28-11-01/401 Main Tank Access Door
   B. Access
      (1) Location Zones
          532 Main Tank - Inboard of Rib No. 10 (Left)
          632 Main Tank - Inboard of Rib No. 10 (Right)

      (2) Access Panels
          532AZ Fuel Tank Baffle Door (Left)
          532BB Main Tank Access Door (Left)
          632AZ Fuel Tank Baffle Door (Right)
          632BB Main Tank Access Door (Right)

   C. Procedure

      S 914-008
      (1) Drain and purge the applicable main fuel tank (AMM 28-11-00/201).

      S 014-009
      (2) Remove the applicable left or right main tank access door, 532BB or 632BB (AMM 28-11-01/401).

      S 014-002
      (3) Get access to the applicable left or right fuel tank baffle door, 532AZ or 632AZ.

      S 034-010
      (4) Remove the bolts from along the sides of the fuel tank baffle door (10 locations).

      S 034-011
      (5) If it is necessary, loosen the bolts along the bottom edge of the fuel tank baffle door.

      S 034-012
      (6) Use the handle to push the fuel tank baffle door inboard.

BOEING PROPRIETARY - Copyright (C) - Unpublished Work - See title page for details.

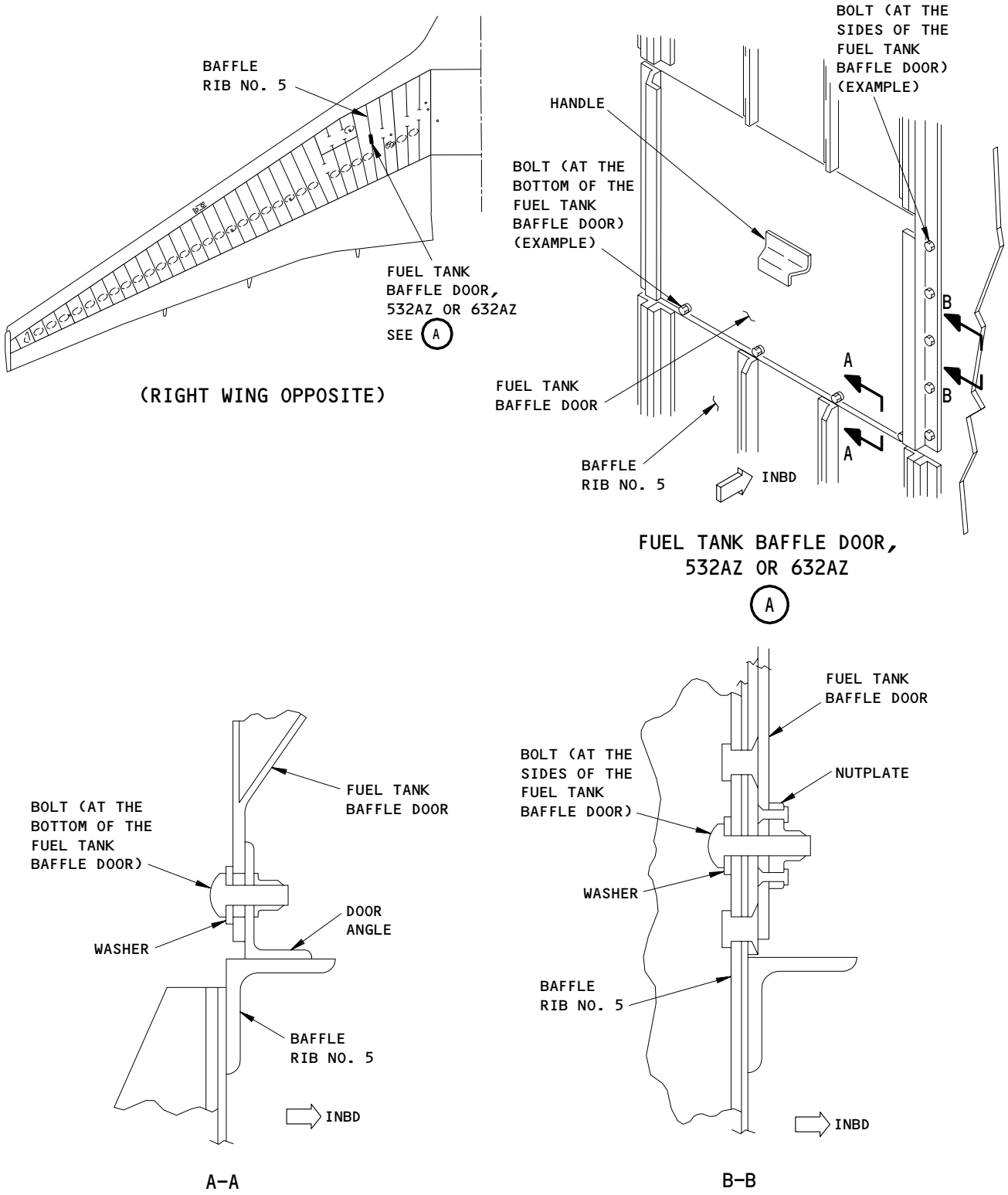

Fuel Tank Baffle Door Installation
Figure 401

BOEING PROPRIETARY - Copyright (C) - Unpublished Work - See title page for details.

S 024-003

(7) Turn and remove the fuel tank baffle door through the opening of the fuel tank baffle door.

TASK 28-11-07-404-013

3. Install the Fuel Tank Baffle Door (Fig. 401)

A. Equipment

(1) Bonding Meter - Model T-477W Avtron Manufacturing Inc., Cleveland, Ohio

B. References

(1) AMM 28-11-00/201 Fuel Tanks

(2) AMM 28-11-01/401 Main Tank Access Door

C. Access

(1) Location Zones

532 Main Tank - Inboard of Rib No. 10 (Left)
632 Main Tank - Inboard of Rib No. 10 (Right)

(2) Access Panels

532AZ Fuel Tank Baffle Door (Left)
532BB Main Tank Access Door (Left)
632AZ Fuel Tank Baffle Door (Right)
632BB Main Tank Access Door (Right)

D. Procedure

S 944-023

WARNING: OBEY THE FUEL TANK ENTRY PRECAUTIONS. FAILURE TO OBEY THE FUEL TANK ENTRY PRECAUTIONS CAN CAUSE INJURY OR DAMAGE.

(1) Obey the fuel tank entry precautions (AMM 28-11-00/201).

S 434-014

(2) If the door angle at the bottom edge of the fuel tank baffle door is loose, tighten the bolts until the door angle can hold the fuel tank baffle door.

BOEING PROPRIETARY - Copyright (C) - Unpublished Work - See title page for details.

S 424-015
(3) Put the fuel tank baffle door, 532AZ or 632AZ, through the opening in the rib.

S 424-004
(4) Set the fuel tank baffle door against the inboard side of the rib.

S 214-005
(5) Make sure the door angle is in the correct position.

S 434-016
(6) Install the bolts and washers along the sides of the fuel tank baffle door (10 locations), but do not tighten.

S 424-017
(7) Push the fuel tank baffle door up until the top edge is tight against the edge of the rib.

S 434-018
(8) Tighten the bolts along the sides of the fuel tank baffle door.

S 434-019
(9) Loosen the bolts along the bottom of the fuel tank baffle door.

S 824-020
(10) Adjust the door angle until it touches the rib for the full length of the door angle.

S 434-006
(11) Tighten the bolts along the bottom of the fuel tank baffle door.

S 224-021
(12) Use the bonding meter to make sure the bonding resistance between the fuel tank baffle door and the rib is not more than 0.010 ohms.

S 414-022
(13) Install the main tank access door, 532BB or 632BB (AMM 28-11-01/401).

BOEING PROPRIETARY - Copyright (C) - Unpublished Work - See title page for details.

FUEL TANK ACCESS DOORS - APPROVED REPAIRS

1. General

A. This procedure contains two tasks. The first task replaces the molded rubber door seal for the access doors. You can use this procedure to replace all the rubber seals on high impact resistant access doors. All new replacement cast aluminum access doors will also have molded rubber seals you can remove and replace. The second task replaces the nuts and the nut retainers for the fuel access doors.

TASK 28-11-10-908-001

2. Replacement of the Molded Rubber Door Seal

A. Equipment
(1) G00034 Cotton Wiper, Process Cleaning Absorbent Wiper (cheesecloth, gauze)-BMS15-5
(2) Sealant removal tool - wood or plastic

B. Consumable Materials
(1) A00767 Sealant - Integral Fuel Tank BMS 5-45
(2) A50052 Sealant - PR-1826 Class B Rapid Curing Fuel Tank Sealant, SAE AMS3277, Class B
(3) A50084 Sealant - Polysulfide Pro Seal 860 Class B, AMS-S-83318A
(4) B00068 Alcohol - Ethyl (Denatured), AMS 3002F, MIL-E-51454, Type II
(5) G00624 Bag - Plastic, General Purpose
(6) G50078 Sandpaper - Aluminum Oxide, 320 Grit

C. References
(1) AMM 28-11-00/801, Fuel Tanks
(2) AMM 28-11-01/401, Main Tank Access Door
(3) AMM 28-11-02/401, Auxiliary Tank Access Door
(4) AMM 28-11-03/401, Surge Tank Access Door
(5) AIPC 28-11-01, Fig. 1

D. Access
(1) Location Zones

134	Wing Center Section (Right)
194	Wing to Body - Forward Lower Half (Right)
531	Center Wing Tank (Left)
631	Center Wing Tank (Right)
541	Main Tank - rib No. 5 to rib No. 17 (Left)
542	Main Tank - rib No. 17 to rib No. 21 (Left)
641	Main Tank - rib No. 5 to rib No. 17 (Right)
642	Main Tank - rib No. 17 to rib No. 21 (Right)

E. Prepare for the Replacement of the Rubber Door Seal

S 018-020
(1) Remove the appliable access door (AMM 28-11-01/401, AMM 28-11-02/401, or AMM 28-11-03/401).

BOEING PROPRIETARY - Copyright (C) - Unpublished Work - See title page for details.

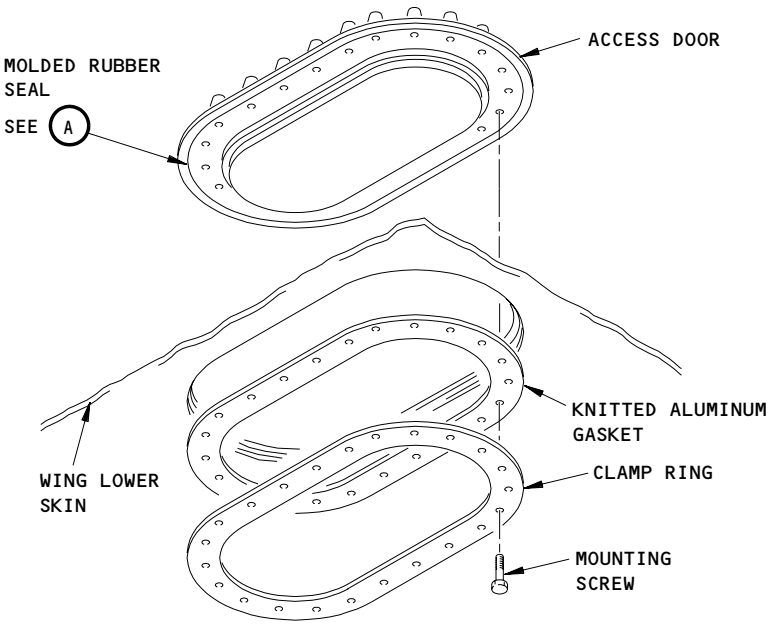

FUEL TANK ACCESS DOOR
(VIEW IN THE UP DIRECTION)

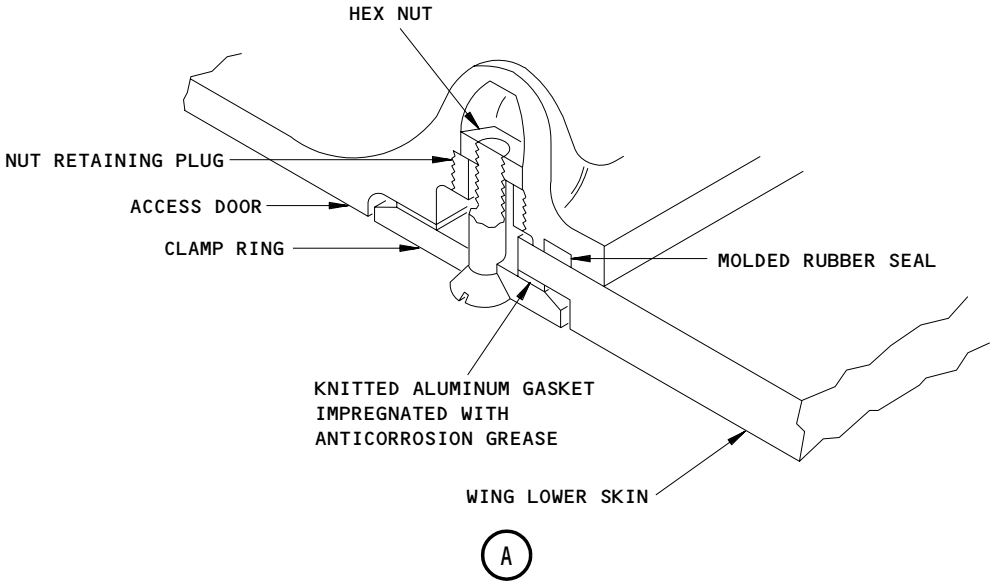

Fuel Tank Access Door Repair
Figure 801

BOEING PROPRIETARY - Copyright (C) - Unpublished Work - See title page for details.

S 028-002

(2) Remove the seal from the door fully.

NOTE: If the seal cannot be removed from a cast aluminum access door, the access door does not have a molded rubber seal that you can remove and replace. You must replace the full access door. Only newer versions of the cast aluminum access doors have molded rubber seals you can remove and replace.

S 148-003

CAUTION: DO NOT CAUSE DAMAGE TO THE FINISH WHEN YOU REMOVE THE SEALANT. TOO MUCH FORCE CAN REMOVE THE PAINT OR PRIMER.

(3) Remove the remaining sealant from the seal groove with the sealant removal tool.

F. Prepare the New Rubber Door Seal

S 918-021

(1) Put on rubber gloves.

NOTE: Wear rubber gloves during this procedure to prevent contamination to the rubber door seal.

S 128-022

(2) Abrade the bottom surface of the rubber door seal with a 320 grit or finer abrasive sandpaper, G50078, to remove the parting agent.

S 868-023

(3) Obey all safety precautions when using solvents, special cleaning compounds, paint strippers (strong alkalies or acids), etchants (corrosion removers that contain acids) or conversion coating chemicals.

S 398-008

WARNING: DO NOT GET SOLVENTS IN YOUR MOUTH, OR YOUR EYES, OR ON YOUR SKIN. DO NOT BREATHE THE FUMES FROM SOLVENTS. SOLVENTS ARE HAZARDOUS MATERIALS. SOLVENTS MAY BE FLAMMABLE OR HARMFUL TO THE ENVIRONMENT. REFER TO PRODUCT MATERIAL SAFETY DATA SHEETS (MSDS) AND LOCAL REQUIREMENTS FOR PROPER HANDLING PROCEDURES.

(4) Remove the unwanted material from the rubber door seal with a clean cotton wiper, G00034 (BMS 15-5), moist with denatured alcohol, B00068.

BOEING PROPRIETARY - Copyright (C) - Unpublished Work - See title page for details.

S 558-024
(5) Keep the rubber door seal in a clean plastic bag, G00624, or a clean sealed plastic container, to prevent contamination of the rubber seal.

S 428-025
(6) Install the rubber door seal in 60 minutes or less.

NOTE: Do the alcohol cleaning procedure if the rubber door seal is not installed in 1 hour.

G. Prepare the Seal Groove on the Door

S 118-026
(1) Clean the surface of the door groove with a clean, dry cotton wiper, G00034 (BMS15-5), to remove wax, dirt, grease, oil or unwanted material.

S 118-027

WARNING: DO NOT GET THE DENATURED ALCOHOL IN YOUR MOUTH OR EYES, OR ON YOUR SKIN. DO NOT BREATHE THE FUMES FROM DENATURED ALCOHOL. PUT ON A PROTECTIVE SPLASH GOGGLE FROM THE SPARKS, FLAME AND HEAT. THE DENATURED ALCOHOL IS A POISONOUS AND FLAMMABLE SOLVENT WHICH CAN CAUSE INJURY OR DAMAGE.

WARNING: DENATURED ETHYL ALCOHOL IS FLAMMABLE AND TOXIC. AVOID PROLONGED BREATHING OF VAPOR AND PROLONGED OR REPEATED CONTACT WITH SKIN. AVOID CONTACT WITH EYES. CLEAN PARTS IN WELL-VENTILATED AREA AND USE APPROVED SAFETY EQUIPMENT.

(2) Clean the seal groove with a clean cotton wiper, G00034, moist with denatured alcohol, B00068.
(a) Let the denatured alcohol dry, B00068.

H. Rubber Door Seal Replacement

S 648-028
(1) Apply the (BMS 5-45, Class A) sealant, A00767, to the full width of the seal groove with a stiff bristle non-metallic brush (AMM 28-11-00/801).

NOTE: An alternative to BMS 5-45, Class A sealant, A00767, is (AMS-S-83318A) sealant, A50084, or (SAE AMS 3277, Class B) sealant, A50052.

BOEING PROPRIETARY - Copyright (C) - Unpublished Work - See title page for details.

S 428-007
(2) Install the seal and make sure it is tightly against the seal groove in all positions.

NOTE: CDCCL - Refer to the task: Airworthiness Limitation Precautions (AMM 28-00-00/201), for important information on Critical Design Configuration Control Limitations (CDCCLs).

S 118-029
(3) Clean off the unwanted sealant with a clean cotton wiper, G00034 (BMS 15-5), and denatured alcohol, B00068.

S 498-030
(4) Apply sufficient clamp pressure to make sure that the rubber door seal is fully installed in the seal groove.

S 498-031
(5) Continue to apply clamp pressure for a minimum of 2 hours at room temperature or 1 hour at 120°F (48.9°C).

S 788-032
(6) Do not stress the bond line until the sealant is fully cured.

NOTE: Sealant is fully cured at a minimum of 72 hours at 75 ±5°F (23.9 ±2.8°C) and 45-55 percent relative humidity.

I. Put the Airplane Back to Its Usual Condition

S 418-033
(1) Install the applicable fuel access door (AMM 28-11-01/401, AMM 28-11-02/401, or AMM 28-11-03/401).

TASK 28-11-10-908-010
3. Replacement of the Access Door Nuts and Retainers
A. References
(1) AMM 28-11-01/401, Main Tank Access Door

BOEING PROPRIETARY - Copyright (C) - Unpublished Work - See title page for details.

(2) AMM 28-11-02/401, Auxiliary Tank Access Door
(3) AMM 28-11-03/401, Surge Tank Access Door

B. Access
(1) Location Zones
531 Aux Tank Access Door (Left)
532 Main Tank Inboard Rib 10 (Left)
541 Main Tank Outboard Rib 10 (Left)
542 Surge Tank Access Door (Left)
631 Aux Tank Access Door (Right)
632 Main Tank Inboard Rib 10 (Right)
641 Main Tank Outboard Rib 10 (Right)
642 Surge Tank Access Door (Right)

C. Procedure

S 038-011
(1) Remove the applicable fuel access door (AMM 28-11-01/401, AMM 28-11-02/401, AMM 28-11-03/401).

S 038-012
(2) Remove the applicable nut retaining plug (Fig. 801).
(a) Make sure the break away torque for the nut retainer plug is 6 pound-inches (0.68 Nm) or more.
(b) If the breakaway torque is less than 6 pound-inches (0.68 Nm), replace the nut retainer plug.

S 038-013
(3) Remove the hex nut.

S 218-015
(4) Inspect the access door for damage where the hex nut and nut retaining plug are installed.
(a) Replace the access door if there are cracks in the hex nut recess area or if the nut has damaged the walls of the hex nut recess area.

S 438-016
(5) Install the hex nut in the hex nut recess.

S 438-017
(6) Install the nut retaining plug into the access door.

S 438-018
(7) Torque the nut retaining plug to 30 to 40 pound-inches (3.4-4.5 Nm).

BOEING PROPRIETARY - Copyright (C) - Unpublished Work - See title page for details.

S 418-019

(8) Install the applicable fuel access door (AMM 28-11-01/401, AMM 28-11-02/401, AMM 28-11-03/401).

BOEING PROPRIETARY - Copyright (C) - Unpublished Work - See title page for details.

SLAT TRACK DRAIN TUBE - REMOVAL/INSTALLATION

1. General
   A. The slat track housing goes through the front spar at nine locations in each wing. There is one slat track housing in the surge tank and eight in the main tank. A drain tube is attached to the slat track housing in the tank to permit collected fluids to fall out of the slat track housing.
   B. This procedure has two tasks. The first removes the slat track drain tube. The second installs the slat track drain tube.

TASK 28-11-11-004-023

2. Remove the Slat Track Drain Tube (Fig. 401)
   A. References
      (1) AIPC 57-12-58
      (2) AMM 28-11-00/201, Fuel Tanks
      (3) AMM 28-11-01/401, Main Tank Access Doors
      (4) AMM 28-11-03/401, Surge Tank Access Doors
      (5) AMM 28-26-00/201, Defueling
   B. Access
      (1) Location Zones
         532 Main Tank - Inboard of Rib No. 10 (Left)
         541 Main Tank - Outboard of Rib No. 10 (Left)
         542 Surge Tank (Left)
         632 Main Tank - Inboard of Rib No. 10 (Right)
         641 Main Tank - Outboard of Rib No. 10 (Right)
         642 Surge Tank (Right)

      (2) Access Panels
         532FB Main Tank Access Door (Left)
         541BB Main Tank Access Door (Left)
         541EB Main Tank Access Door (Left)
         541HB Main Tank Access Door (Left)
         541LB Main Tank Access Door (Left)
         541PB Main Tank Access Door (Left)
         541TB Main Tank Access Door (Left)
         541WB Main Tank Access Door (Left)
         542AB Surge Tank Access Door (Left)
         632FB Main Tank Access Door (Right)
         641BB Main Tank Access Door (Right)
         641EB Main Tank Access Door (Right)
         641HB Main Tank Access Door (Right)
         641LB Main Tank Access Door (Right)
         641PB Main Tank Access Door (Right)
         641TB Main Tank Access Door (Right)
         641WB Main Tank Access Door (Right)
         642AB Surge Tank Access Door (Right)

BOEING PROPRIETARY - Copyright (C) - Unpublished Work - See title page for details.

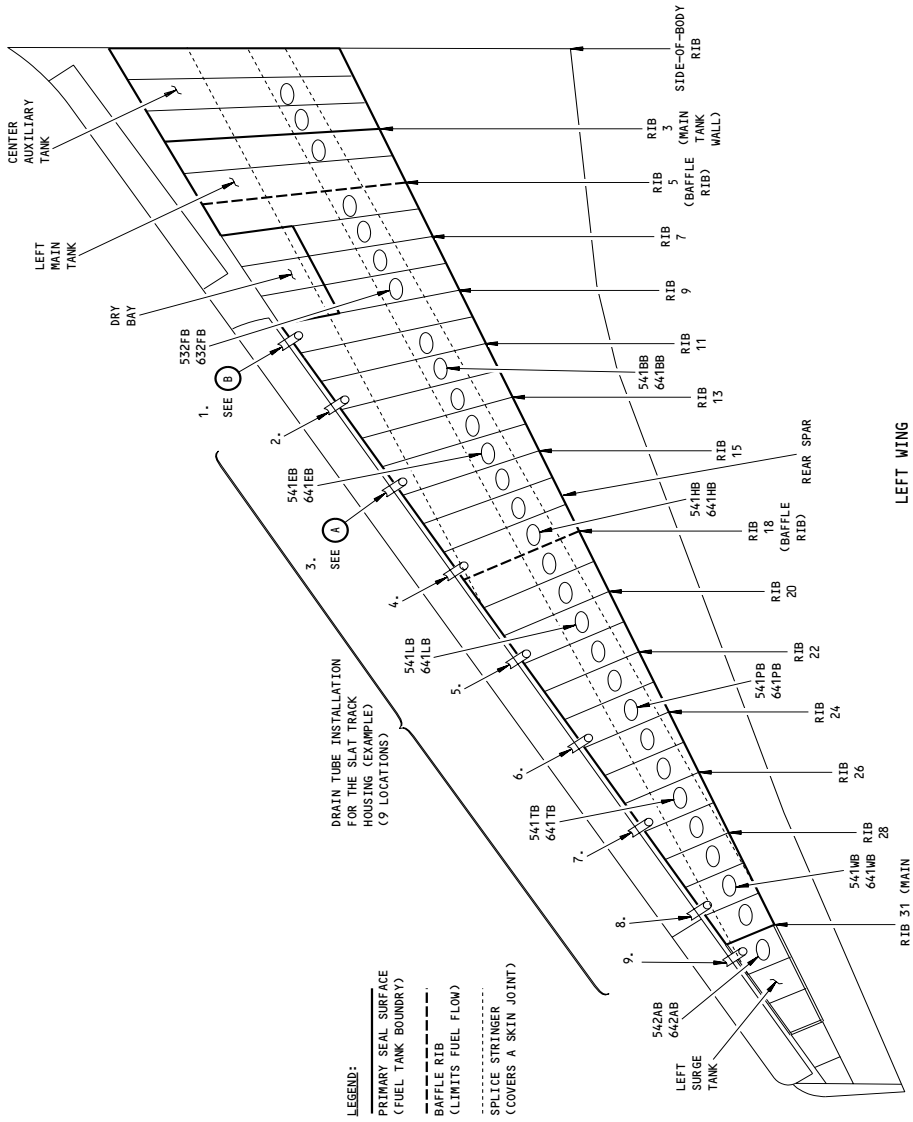

Slat Track Drain Tube Installation
Figure 401 (Sheet 1)

BOEING PROPRIETARY - Copyright (C) - Unpublished Work - See title page for details.

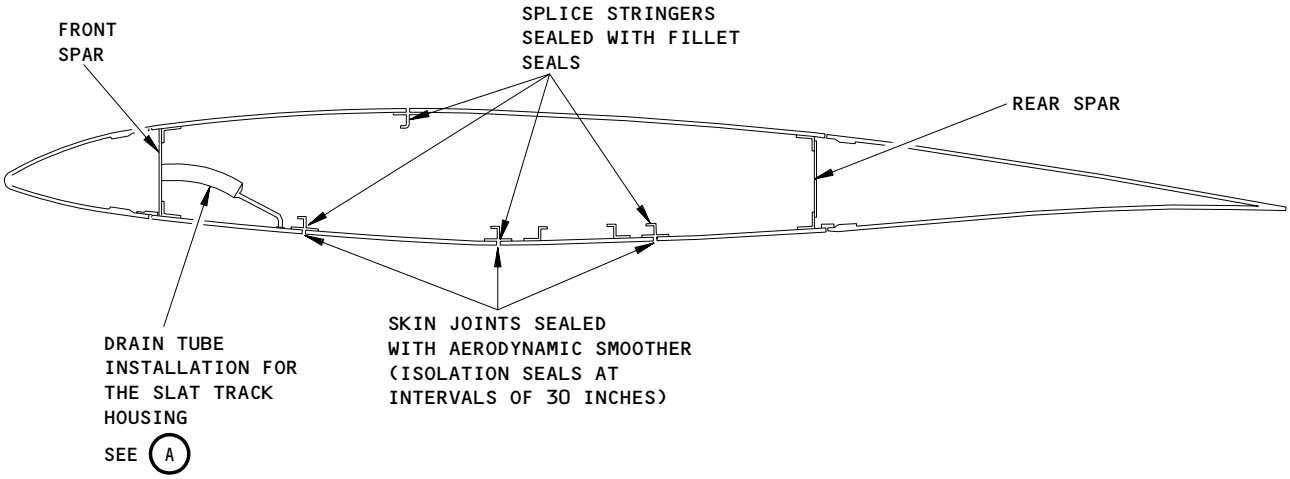

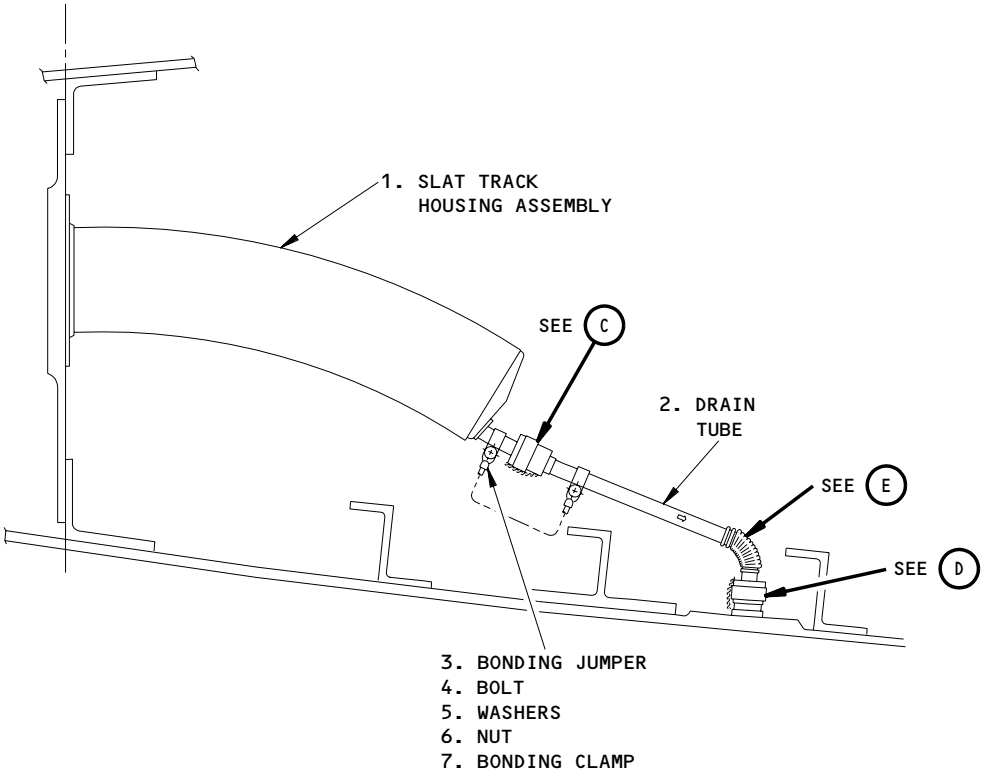

DRAIN TUBE INSTALLATION FOR THE SLAT TRACK HOUSING

A

Slat Track Drain Tube Installation
Figure 401 (Sheet 2)

BOEING PROPRIETARY - Copyright (C) - Unpublished Work - See title page for details.

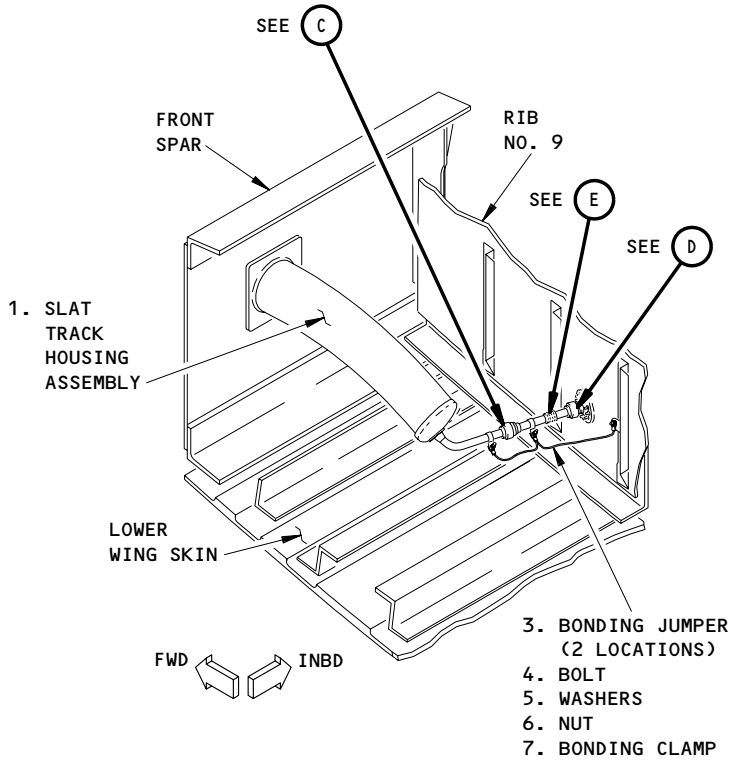

DRAIN TUBE INSTALLATION NO. 1

B

Slat Track Drain Tube Installation
Figure 401 (Sheet 3)

BOEING PROPRIETARY - Copyright (C) - Unpublished Work - See title page for details.

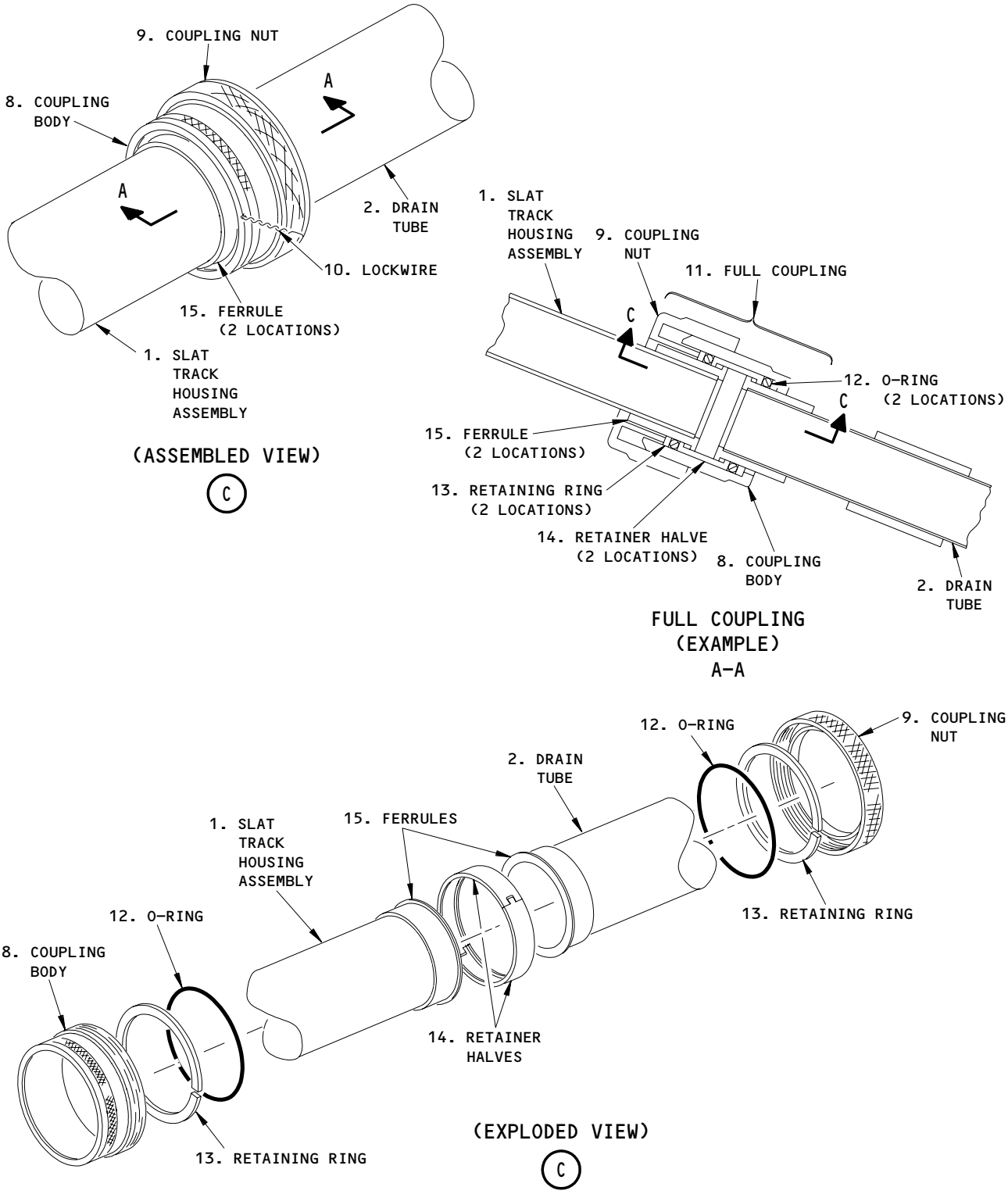

Slat Track Drain Tube Installation
Figure 401 (Sheet 4)

BOEING PROPRIETARY - Copyright (C) - Unpublished Work - See title page for details.

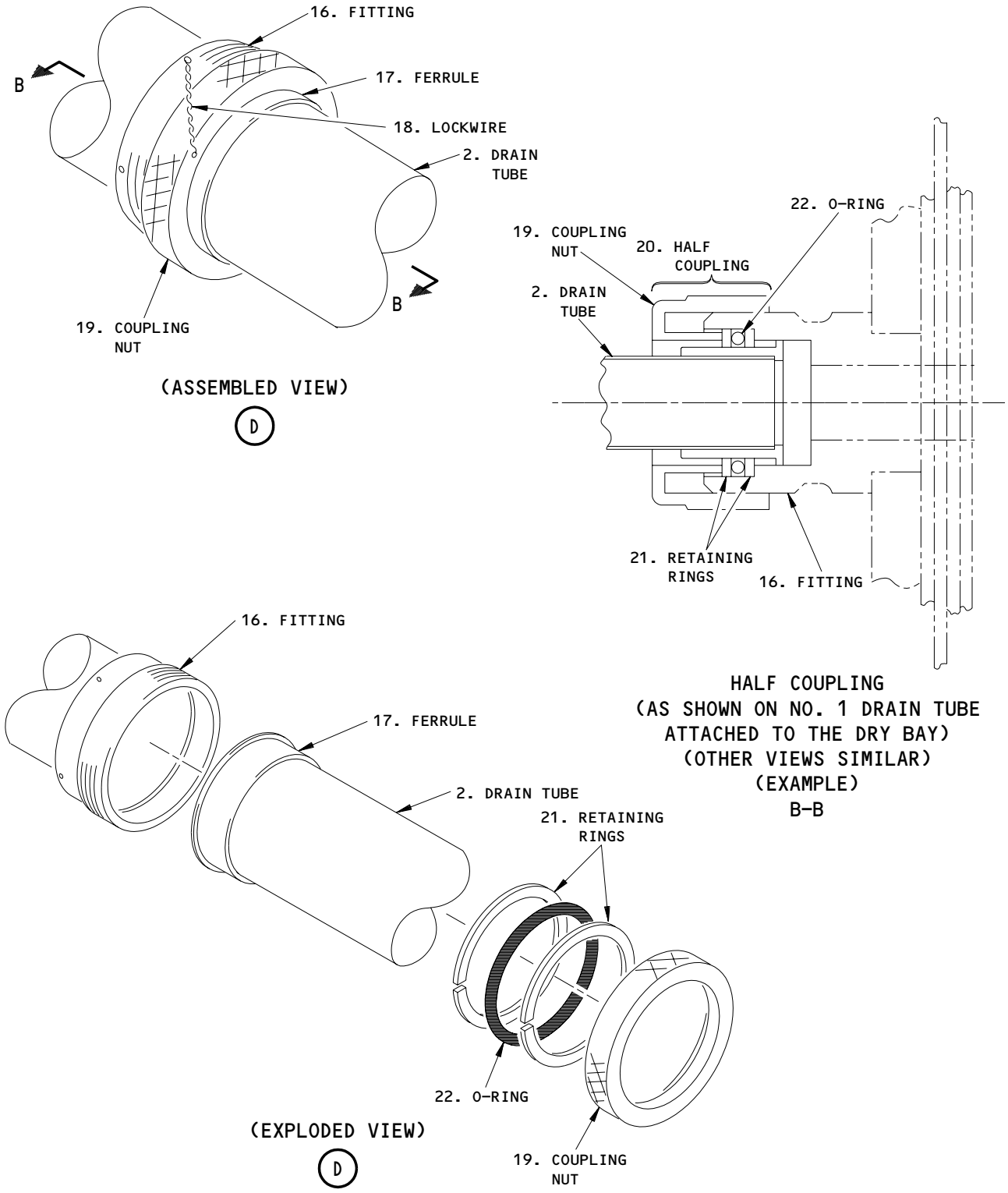

Slat Track Drain Tube Installation
Figure 401 (Sheet 5)

BOEING PROPRIETARY - Copyright (C) - Unpublished Work - See title page for details.

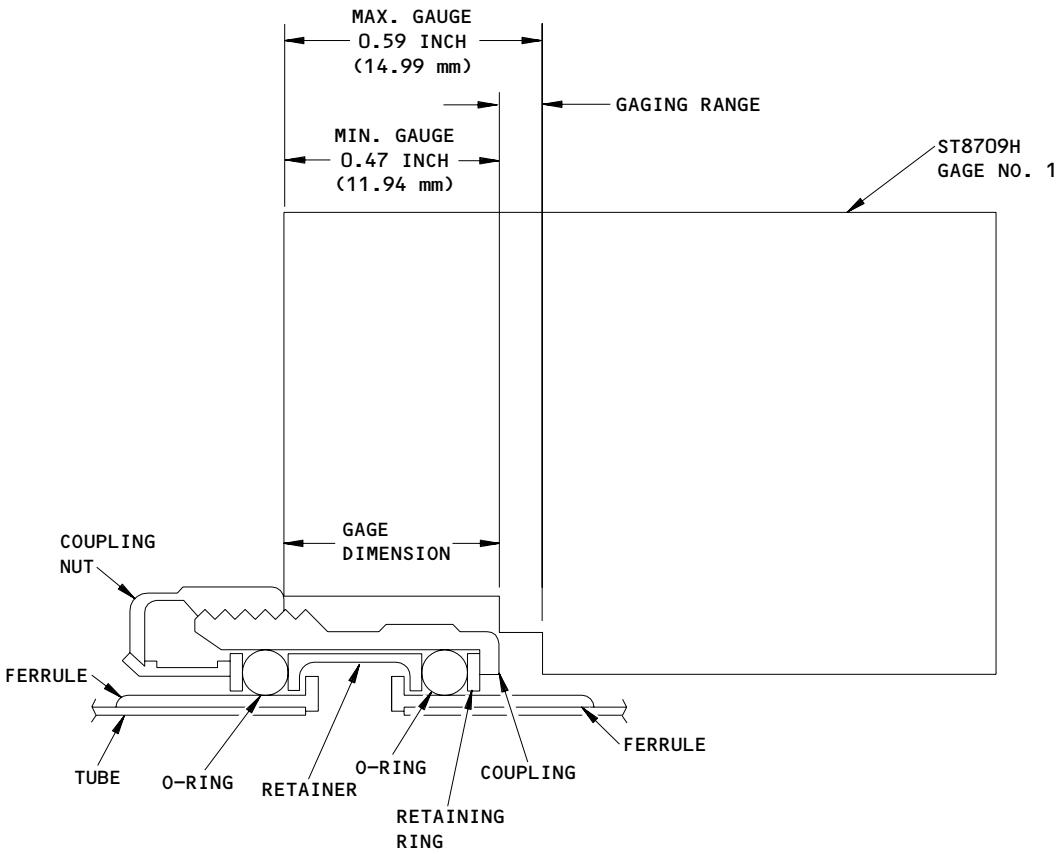

FULL COUPLING WITH COUPLING GAGE
C-C

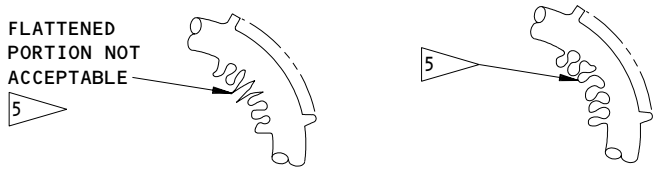

NOT ACCEPTABLE ACCEPTABLE

E 4

4 IF INSTALLED FOR SLAT TRACK DRAIN TUBE NO. 1 PRE-SB 57A94

5 MINIMUM INSIDE BEND RADII OF FLEXIBLE SECTION OF DRAIN TUBE IS 0.75 INCH (19.05 mm) FLATTENING OF FLEXIBLE SECTION IS NOT ACCEPTABLE

Slat Track Drain Tube Installation
Figure 401 (Sheet 6)

BOEING PROPRIETARY - Copyright (C) - Unpublished Work - See title page for details.

C. Procedure

S 654-024

(1) For slat track drain tubes in the main tank, defuel the applicable main fuel tank (AMM 28-26-00/201).

S 944-028

WARNING: OBEY THE FUEL SUMP DRAINING PROCEDURE. IF YOU DO NOT OBEY THE FUEL SUMP DRAINING PROCEDURE, INJURY TO PERSONS OR DAMAGE TO EQUIPMENT CAN OCCUR.

(2) For the slat track housing in the surge tank, drain the surge tank at the sump drain valve (AMM 12-11-03/301).

S 014-029

(3) For slat track drain tubes in the main fuel tank, remove the applicable main tank access door to get access to the slat track drain tube (AMM 28-11-01/401).

S 014-030

(4) For the slat track drain tube installed in the surge tank, open surge tank access door 542AB (642AB) (AMM 28-11-03/401).

S 944-026

WARNING: OBEY THE PURGING AND FUEL TANK ENTRY PRECAUTIONS. FAILURE TO OBEY PRECAUTIONS COULD CAUSE INJUSRY TO PERSONS OR DAMAGE TO EQUIPMENT.

(5) Do the Purging and Fuel Tank Entry procedure for the applicable tank to get access to the drain tube (2) near the front spar (AMM 28-11-00/201).

S 024-031

(6) Disconnect the bolt (4), washers (5), nut (6), and bonding jumper(s) (3) from the bonding clamp (7).
   (a) If it is necessary, remove the bonding clamp (7) from the drain tube (2).

S 024-032

(7) Do the steps that follow to disconnect the full coupling (11) (Fig. 401, View C):
   (a) Remove the lockwire (10).
   (b) Loosen the coupling nut (9) and the coupling body (8).
   (c) Discard the two o-rings (12).

BOEING PROPRIETARY - Copyright (C) - Unpublished Work - See title page for details.

(d) Inspect the coupling body (8), coupling nut (9), retainer halves (14), and retaining rings (13) for wear.
1) Replace these components if it is necessary.

S 024-033

(8) Do the steps that follow to disconnect the half coupling (20) (Fig. 401, View D):
(a) Remove the lockwire (18).
(b) Loosen the coupling nut (19) and the fitting (16).
(c) Discard the o-ring (22).
(d) Inspect the coupling nut (9) and retaining rings (21) for wear.
1) Replace these components if it is necessary.

S 024-035

(9) Remove the drain tube (2).

TASK 28-11-11-404-036

3. Install the Slat Track Drain Tube (Fig. 401)

A. Equipment
(1) Coupling gage - ST8709 H (optional)
(2) Bonding Meter - Use one of these:
(a) Bonding Meter - T477W
Avtron Manufacturing Co.
Cleveland, OH
(b) Bonding Meter - Model M1
(Serial Number A000012 and subsequent)
BCD Electronics Ltd.
Vancouver, Canada

B. Consumable Materials
(1) D00015 Grease - Corrosion Preventative, BMS 3-24
(2) G02353 Lubricant - Petrolatum, VV-P-236

C. References
(1) AIPC 57-12-58
(2) AMM 12-11-01/301, Fuel Tank Pressure Fueling
(3) AMM 20-10-21/401, Electrical Bonding
(4) AMM 20-10-23/401, Lockwire
(5) AMM 28-11-00/201, Fuel Tanks
(6) AMM 28-11-01/401, Main Tank Access Doors
(7) AMM 28-11-03/401, Surge Tank Access Doors
(8) SWPM 20-20-00

BOEING PROPRIETARY - Copyright (C) - Unpublished Work - See title page for details.

D. Access

(1) Location Zones

532 Main Tank - Inboard of Rib No. 10 (Left)
541 Main Tank - Outboard of Rib No. 10 (Left)
542 Surge Tank (Left)
632 Main Tank - Inboard of Rib No. 10 (Right)
641 Main Tank - Outboard of Rib No. 10 (Right)
642 Surge Tank (Right)

(2) Access Panels

532FB Main Tank Access Door (Left)
541BB Main Tank Access Door (Left)
541EB Main Tank Access Door (Left)
541HB Main Tank Access Door (Left)
541LB Main Tank Access Door (Left)
541PB Main Tank Access Door (Left)
541TB Main Tank Access Door (Left)
541WB Main Tank Access Door (Left)
542AB Surge Tank Access Door (Left)
632FB Main Tank Access Door (Right)
641BB Main Tank Access Door (Right)
641EB Main Tank Access Door (Right)
641HB Main Tank Access Door (Right)
641LB Main Tank Access Door (Right)
641PB Main Tank Access Door (Right)
641TB Main Tank Access Door (Right)
641WB Main Tank Access Door (Right)
642AB Surge Tank Access Door (Right)

E. Procedure

S 944-037

WARNING: OBEY THE PURGING AND FUEL TANK ENTRY PRECAUTIONS. FAILURE TO OBEY PRECAUTIONS COULD CAUSE INJUSRY TO PERSONS OR DAMAGE TO EQUIPMENT.

(1) Obey the fuel tank entry precautions (AMM 28-11-00/201).

S 424-038

(2) Do the steps that follow to install the full coupling (11) (Fig. 401, View C):

(a) Lightly coat the coupling body (8), retaining rings (13), retainer halves (14), ferrules (15), and coupling nut (9) with BMS 3-24 Grease.

BOEING PROPRIETARY - Copyright (C) - Unpublished Work - See title page for details.

(b) Install coupling nut (9) over the ferrule (15) installed on the end of the slat track housing assembly (1) or the drain tube (2).
(c) Install coupling body (8) over the other ferrule (15) installed on the end of the slat track housing assembly (1) or the drain tube (2).

CAUTION: DO NOT TWIST THE RETAINING RING OUT OF SHAPE. IF THE RETAINING RING IS DAMAGED, LEAKS AT THE FITTING COULD OCCUR.

(d) Install one retaining ring (13) over each ferrule (15) on the slat track housing assembly (1) and the drain tube (2).
(e) Lubricate the two new o-rings (12) with petrolatum.
(f) Install a new o-ring (12) over the ferrule (15) on the slat track housing assembly (1).
(g) Install a new o-ring (12) over the ferrule (15) installed on the drain tube (2).
(h) Align the ends of the drain tube (2) and the slat track housing assembly (1) with a 0.15 +/- 0.05 inch (3.81 +/- 1.27 mm) clearance between the ferrules (15).
(i) Install the retainer halves (14) over both ferrules (15).
(j) Manually tighten the coupling nut (9) to the necessary dimension (Fig. 401, View C-C).

NOTE: Use the coupling gage to measure the dimension.

(k) Install the lockwire (11) between the coupling nut (9) and the coupling body (8) (AMM 20-10-23/401).

S 424-039
(3) Do the steps that follow to install the half coupling (20) (Fig. 401, View D):
(a) Lightly coat coupling nut (19), retaining rings (21), and fitting (16) with BMS 3-24 grease.
(b) Install the coupling nut (19) over the ferrule (17).

CAUTION: DO NOT TWIST THE RETAINING RING OUT OF SHAPE. IF THE RETAINING RING IS DAMAGED, LEAKS AT THE FITTING COULD OCCUR.

(c) Install one retaining ring over the ferrule (17).
(d) Lubricate the new o-ring (22) with petrolatum.
(e) Install the o-ring (22) over the ferrule (17).

BOEING PROPRIETARY - Copyright (C) - Unpublished Work - See title page for details.

CAUTION: DO NOT TWIST THE RETAINING RING OUT OF SHAPE. IF THE RETAINING RING IS DAMAGED, LEAKS AT THE FITTING COULD OCCUR.

(f) Install the second retaining ring (21) over the ferrule (17).
(g) Do the steps that follow to align the drain tube (2) and the fitting (16):
  1) Make sure the end of the drain tube (2) is offset from the fitting by less than 0.06 inch (1.52 mm).
  2) For flexible drain tubes (2), make sure the flexible portion does not flatten and that the inside bend radius is more than 0.75 inches (1.90 cm) (Fig. 401, View E).
(h) Manually tighten the coupling nut (19).
(i) Install the lockwire (18) between the coupling nut (19) and the fitting (16) (AMM 20-10-23/401).

S 424-040
(4) Do the steps that follow to connect the bonding jumper(s) (3) to the drain tube (2):
(a) If it is necessary, do the steps that follow to install the bonding clamp (7):
  1) Prepare the surfaces of the bonding clamp (7) and the drain tube (2) for a faying surface bond (SWPM 20-20-00).
  2) Install the bonding clamp (7).
  3) Use a bonding meter to measure the resistance between the bonding clamp tab and the drain tube (2) (SWPM 20-20-00).
    a) Make sure the resistance is less than 0.005 ohm (5 milliohms).
(b) Install the bolt (4), washers (5), bonding jumper(s) (3), and nut (6) (AMM 20-10-21/401).
(c) Use a bonding meter to measure the resistance between the bonding jumper (3) and the slat track housing assembly (1) (SWPM 20-20-00).
  1) Make sure the resistance is less than 0.010 ohm (10 milliohms).
(d) If it is installed on drain tube number 1, use a bonding meter to measure the resistance between the bonding jumper (3) and the stiffener on rib number 9 (SWPM 20-20-00).
  1) Make sure the resistance is less than 0.010 ohm (10 milliohms).

S 414-041
(5) Do the task: Fuel Tank Closure (AMM 28-11-00/201).

BOEING PROPRIETARY - Copyright (C) - Unpublished Work - See title page for details.

S 414-042
(6) If it is removed, install the applicable access door for the main tank (AMM 28-11-01/401).

S 414-043
(7) If it is removed, install the surge tank access door 542AB (642AB) (AMM 28-11-03/401).

S 654-044
(8) If it is necessary, refuel the fuel tank (AMM 12-11-01/301).

BOEING PROPRIETARY - Copyright (C) - Unpublished Work - See title page for details.

FUEL TANK VENT SYSTEM - DESCRIPTION AND OPERATION

1. General (Fig. 1)
   A. The fuel tank vent system (referred to as "the fuel vent system") prevents positive or negative pressures from building up in the fuel tanks. It also provides venting for fuel fumes.
   B. Fuel Vent System Description
      (1) The fuel vent system lets fuel fumes escape to ambient. This prevents an explosive environment from developing within the fuel tanks. Three hat section wing stringers form vent channels. Each channel opens into the wing's surge tank. The fuel vent float valves (referred to as "the float valves"), mounted on each channel, prevent fuel overflow through the channel into the surge tank.
      (2) Vent tubes mount to each vent channel. The vent tubes provide venting during climb or descent when the float valves are closed. Float drain valves mounted to each vent tube allow trapped fuel to drain back into the fuel tank.
      (3) A surge tank, located at the end of each wing, collects fuel fumes and any overflow fuel passed through the vent channels. Overflow fuel drains to the center auxiliary fuel tank through a drain tube and check valve. A vent scoop on the wing's lower surface creates a positive pressure during flight. Fuel fumes in the surge tank are drawn through a flame arrestor and exhausted through the vent scoop. A pressure relief valve provides backup venting if the vent scoop becomes plugged.
   C. Main Tank Venting
      (1) Each main tank uses two vent channels. A float valve prevents fuel from entering one channel. The second vent channel permits free flow into the surge tank without any valve or obstructions. This vent channel prevents tank overpressurization in case of a fueling system problem.
      (2) A float valve mounted on baffle rib 18 permits air movement from the inboard section of the wing to the outboard section during fueling. This prevents a trapped air bubble from forming in the inner section of the tank.
   D. Auxiliary Fuel Tank Venting
      (1) The third wing vent channel provides venting for the auxiliary fuel tank. Each outer compartment of the fuel tank is connected to the opposite side surge tank. This assures proper venting if one surge tank vent scoop is plugged.
      (2) A series of one inch diameter holes through the side-of-body ribs connect the center and outer compartments.

BOEING PROPRIETARY - Copyright (C) - Unpublished Work - See title page for details.

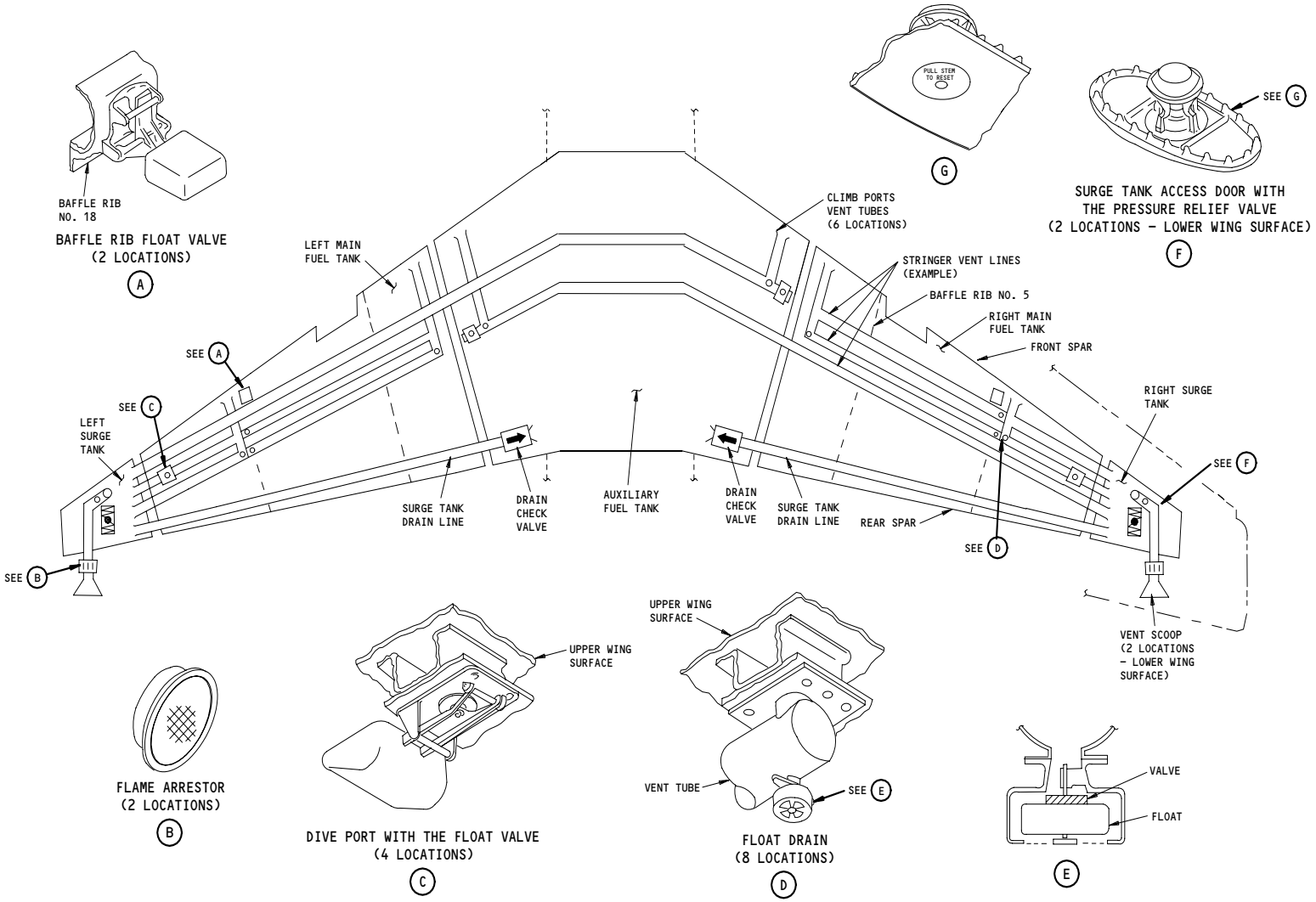

Fuel Vent System
Figure 1

BOEING PROPRIETARY – Copyright (C) – Unpublished Work – See title page for details.

287886

2. Component Details
   A. Fuel Vent Float Valve (Installed on Rib 18) (Fig. 2)
      (1) The fuel vent float valve is a float actuated vent valve. The float valve is installed on the top forward portion of each baffle rib 18 with the float on the inboard side. The vertically installed float valve opens when the float is not immersed in fuel. When the fuel level increases, immersing the float, the float valve closes.
      (2) The float valve permits the free flow of air between the inboard and outboard section of the main fuel tank. This prevents a trapped air bubble from forming inboard of the baffle rib during fueling operations. The float valve also helps prevent the outboard flow of fuel during an airplane roll maneuver.

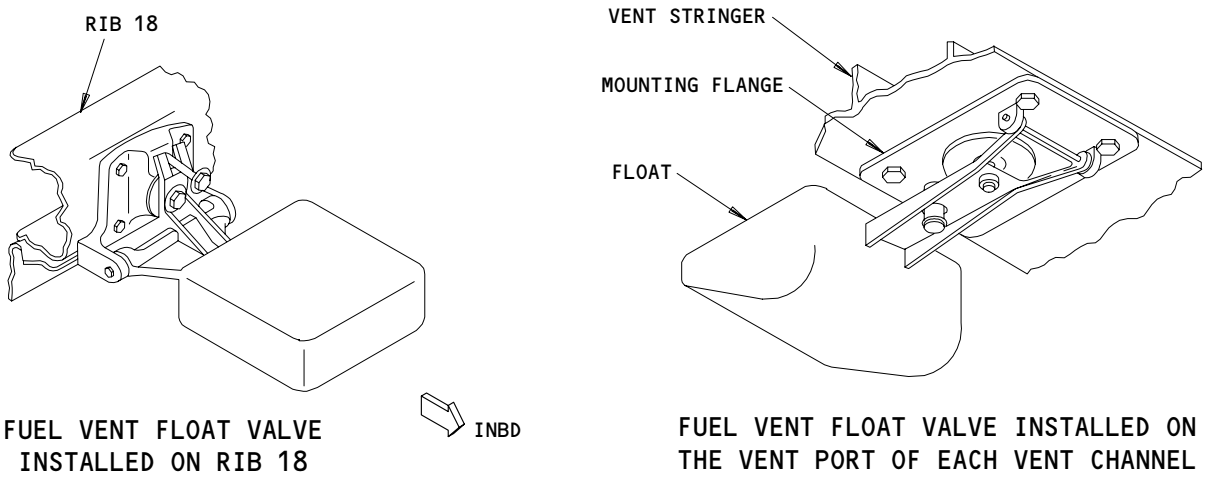

Fuel Vent Float Valves
Figure 2

BOEING PROPRIETARY - Copyright (C) - Unpublished Work - See title page for details.

B. Fuel Vent Float Valve (Installed on the Vent Port of Each Vent Channel) (Fig. 2)

(1) The fuel vent float valve, installed on the vent channel, prevents fuel from entering the vent channels. The valves are installed horizontally on the lower surface of the vent channel. One float valve is supplied in each main fuel tank and each compartment of the auxiliary fuel tank. The float valve closes when fuel immerses the float. The valve opens to permit venting when the float hangs free.

C. Float Drain Valve (Fig. 3)

(1) The float drain valve is a 3/4-inch diameter, float actuated drain valve. The drain float valve attaches to the lower aft section of each vent tube. An additional drain valve is installed on each surge tank standpipe tube.

(2) The float drain valve opens to permit fuel to drain from each vent tube back into the fuel tank. The float drain valve opens when the float is not immersed in fuel. As the fuel level increases, immersing the float, the float pushes the valve against the valve seat. This prevents fuel from entering the drain tube and vent channel.

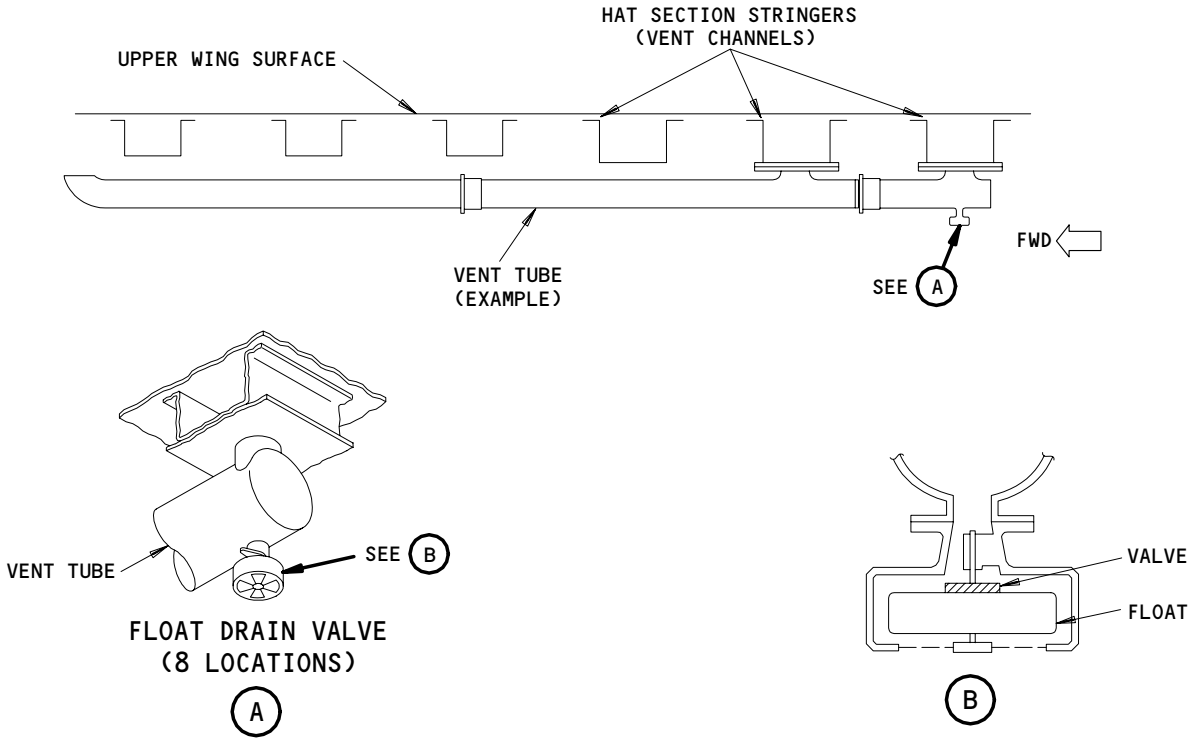

Float Drain Valve (Fuel Vent)
Figure 3

BOEING PROPRIETARY - Copyright (C) - Unpublished Work - See title page for details.

D. Pressure Relief Valve (Fig. 4)
   (1) A pressure relief valve supplies backup pressure venting in each surge tank. Positive or negative pressure can open the valve. The two way pressure relief valve attaches to the inner surface of the surge tank access door. The door is found between ribs 31 and 32.
   (2) The pressure relief valve ("the valve") is mechanically actuated by either fuel or air pressure. Normally spring loaded closed, the valve opens at a positive surge tank pressure of 2.5 psi. The valve also opens if a negative pressure of 1.0 psi develops in the surge tank. Once opened, the valve stays open until manually reset. This assures continued venting of each surge tank if a vent scoop becomes plugged. Pulling the valve stem resets the valve.
E. Surge Tank Drain Check Valve
   (1) A drain check valve for the surge tank just inboard of each inboard main tank end rib permits surge tank drainage into the auxiliary fuel tank while preventing fuel flow in the opposite direction. The check valve is a flapper type of check valve.
F. Vent Flame Arrestor (Fig. 5)
   (1) A vent flame arrestor is installed in each vent line between the surge tank and the vent scoop. The 4.0 inch diameter vent flame arrestor has a 1.25 inch thick stainless steel honeycomb core surrounded by a mounting ring. The honeycomb core acts as a heat sink, cooling the fuel fumes below their ignition point. The vent flame arrestor also prevents all external flames from entering the surge tank.

BOEING PROPRIETARY - Copyright (C) - Unpublished Work - See title page for details.

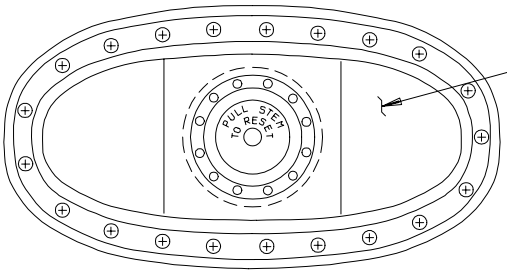

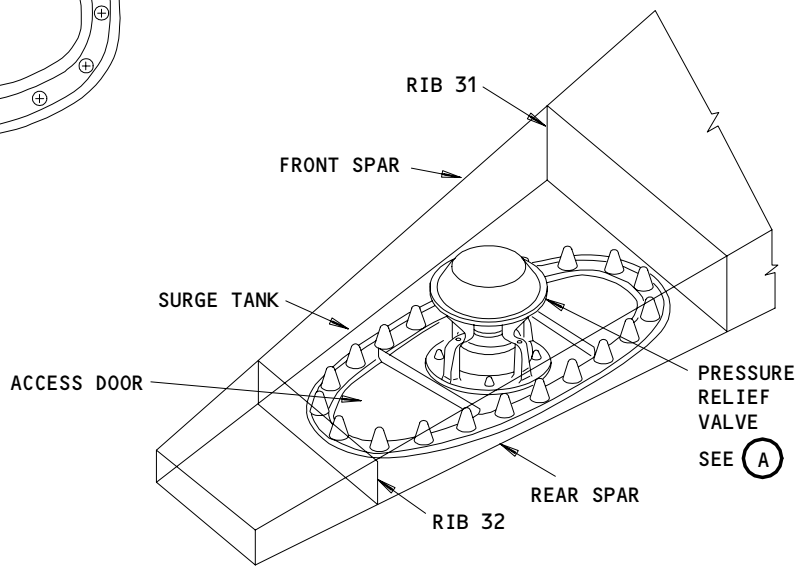

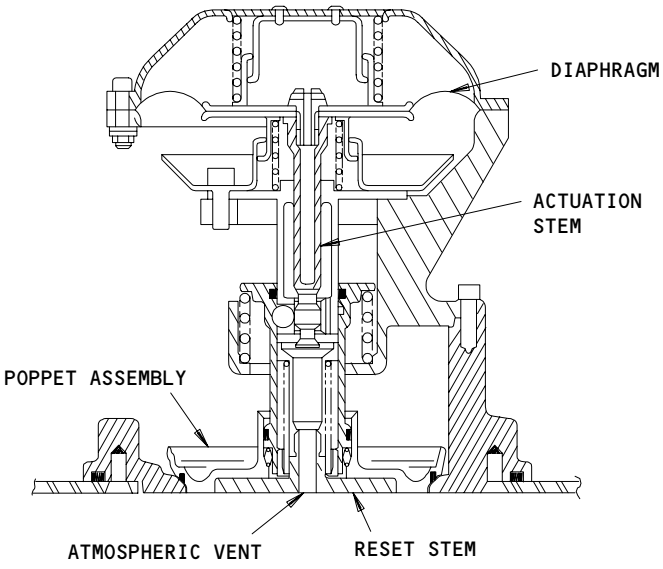

PRESSURE RELIEF VALVE

A

Pressure Relief Valve
Figure 4

BOEING PROPRIETARY - Copyright (C) - Unpublished Work - See title page for details.

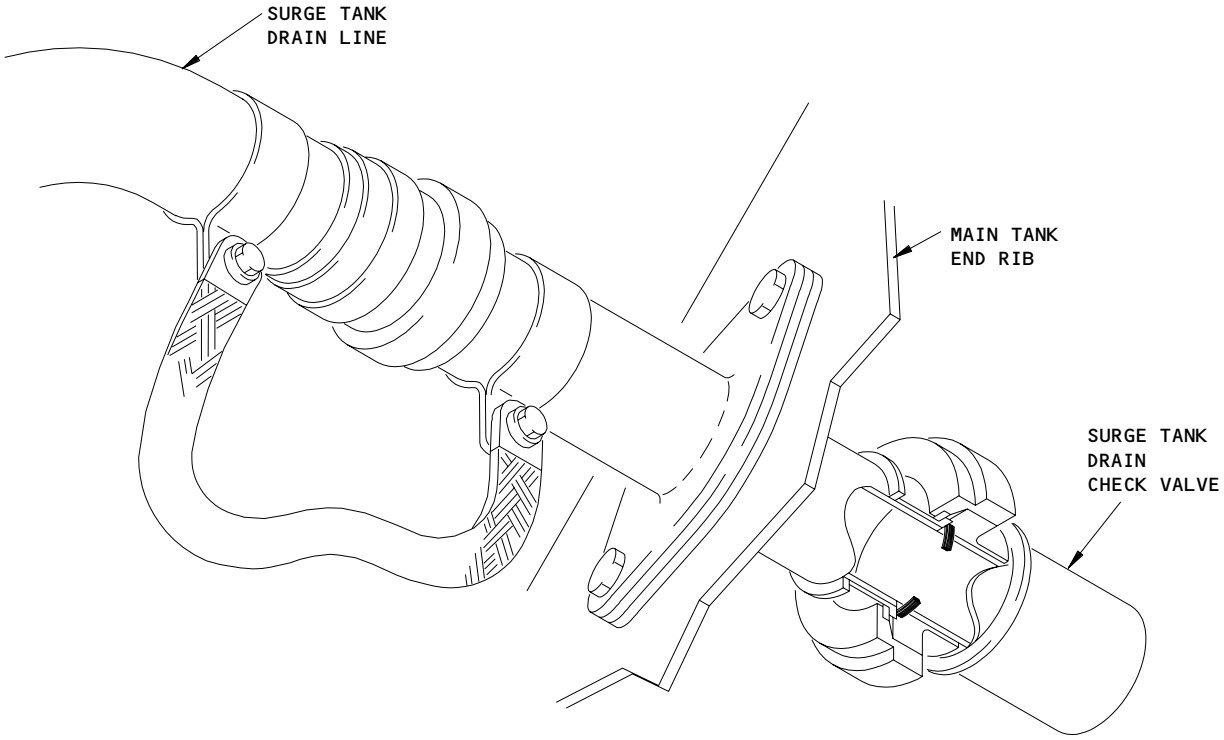

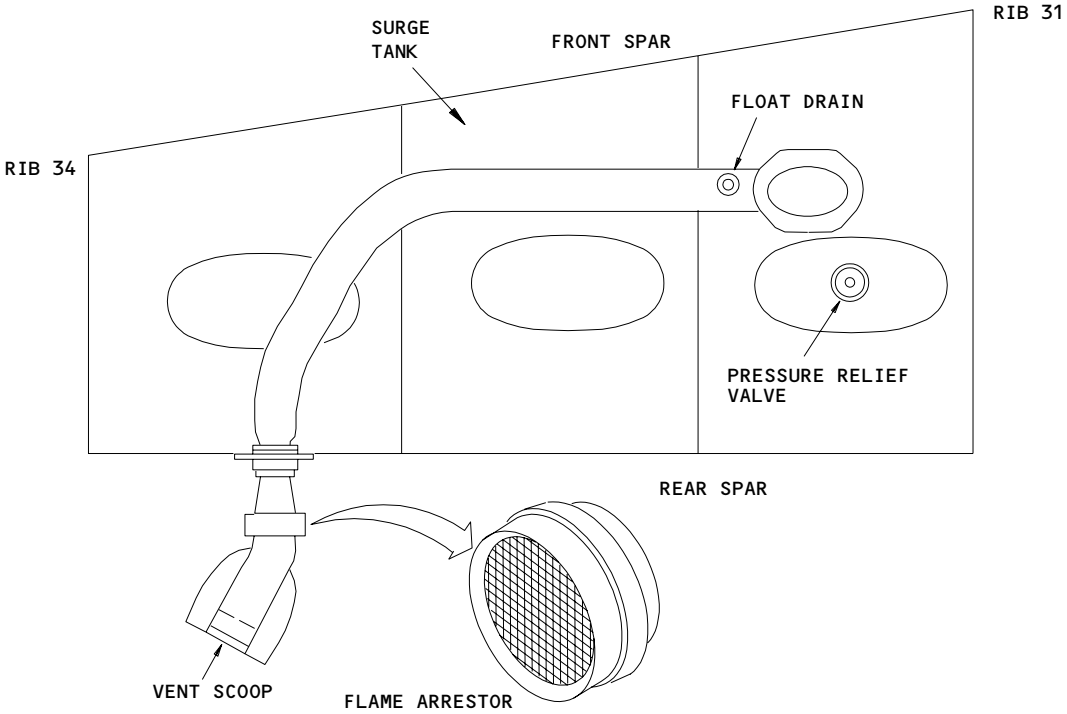

Surge Tank Drain Check Valve and Vent Flame Arrestor
Figure 5

BOEING PROPRIETARY - Copyright (C) - Unpublished Work - See title page for details.

FUEL VENT SYSTEM

COMPONENT	FIG. 102 SHT	QTY	ACCESS/AREA	REFERENCE
ARRESTOR - LEFT SURGE TANK FLAME	2	1	561PB, LEFT SURGE TANK REAR SPAR	28-13-05
ARRESTOR - RIGHT SURGE TANK FLAME	2	1	661PB, RIGHT SURGE TANK REAR SPAR	28-13-05
VALVE - LEFT FLOAT	1	2	541XB, 531BB, LEFT MAIN FUEL TANK	28-13-01
VALVE - LEFT FLOAT	1	1	541HB, LEFT MAIN FUEL TANK	28-13-01
VALVE - LEFT FLOAT DRAIN	2	3	542AB, 541JB, 532BB, LEFT MAIN FUEL TANK	28-13-03
VALVE - LEFT FLOAT DRAIN	2	1	531BB, LEFT AUX FUEL TANK	28-13-03
VALVE - LEFT SURGE TANK DRAIN CHECK	2	1	531BB, LEFT AUX FUEL TANK	28-13-06
VALVE - LEFT SURGE TANK PRESSURE RELIEF	1	1	542AB, LEFT SURGE TANK	28-13-04
VALVE - RIGHT FLOAT	1	2	641XB, 631BB, RIGHT MAIN FUEL TANK	28-13-01
VALVE - RIGHT FLOAT	1	1	641HB, RIGHT MAIN FUEL TANK	28-13-01
VALVE - RIGHT FLOAT DRAIN	2	3	642AB, 641JB, 632BB, RIGHT MAIN FUEL TANK	28-13-03
VALVE - RIGHT FLOAT DRAIN	2	1	631BB, RIGHT AUX FUEL TANK	28-13-03
VALVE - RIGHT SURGE TANK PRESSURE RELIEF	1	1	642AB, RIGHT SURGE TANK	28-13-06
VALVE - RIGHT SURGE TANK DRAIN CHECK	2	1	631BB, RIGHT AUX FUEL TANK	28-13-04

Fuel Vent System - Component Index
Figure 101

BOEING PROPRIETARY - Copyright (C) - Unpublished Work - See title page for details.

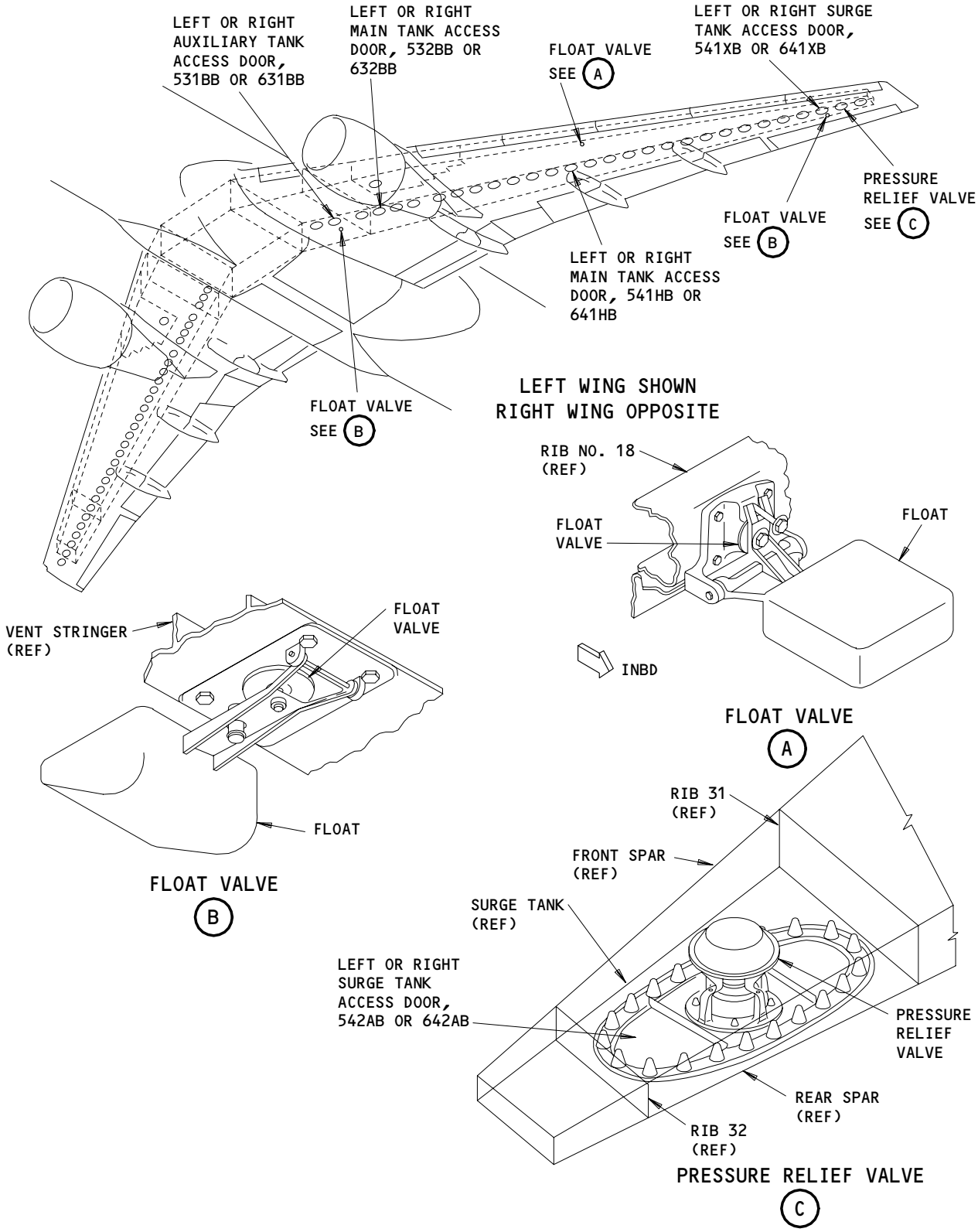

Fuel Vent System - Component Location
Figure 102 (Sheet 1)

BOEING PROPRIETARY - Copyright (C) - Unpublished Work - See title page for details.

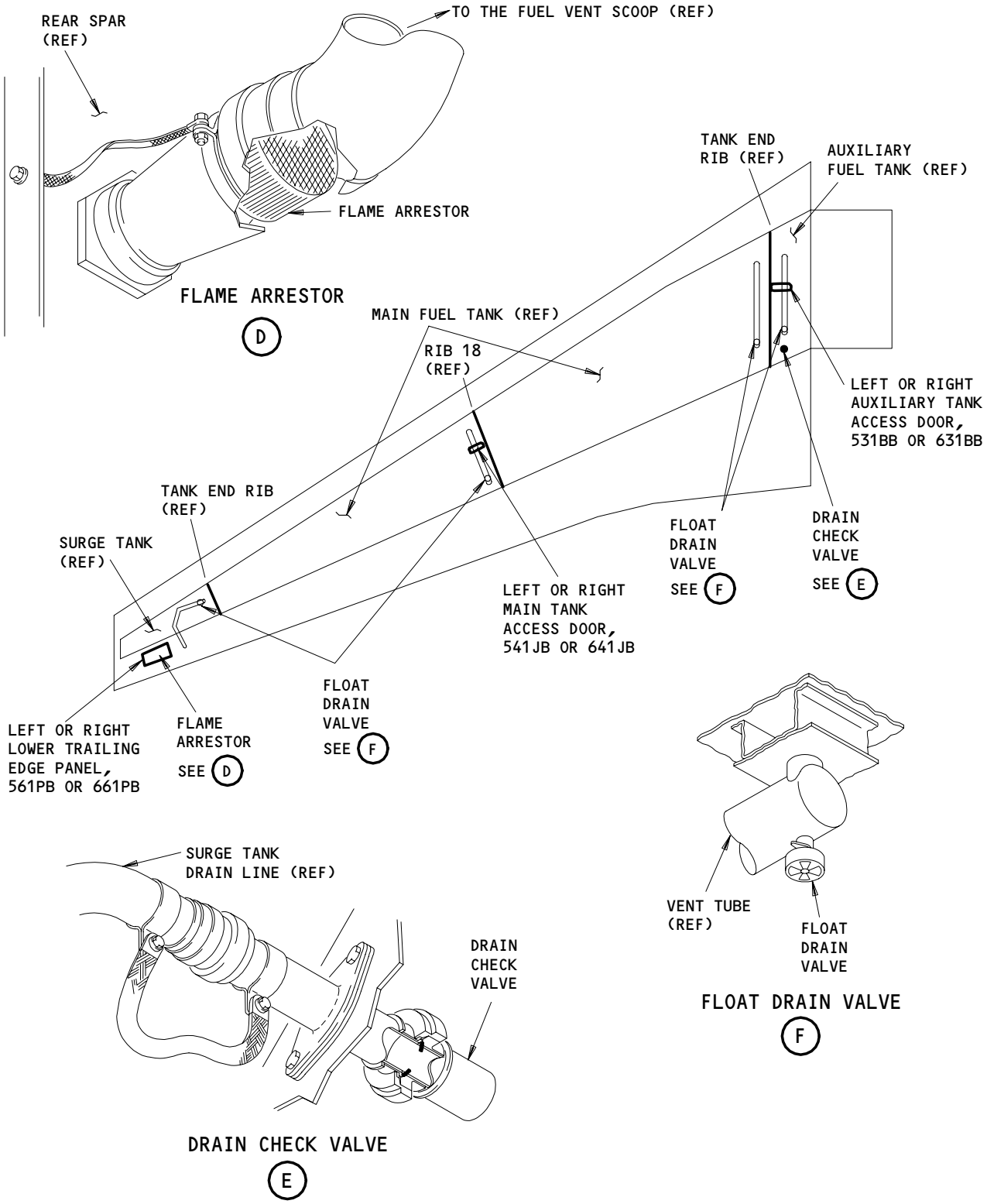

Fuel Vent System - Component Location
Figure 102 (Sheet 2)

BOEING PROPRIETARY - Copyright (C) - Unpublished Work - See title page for details.

FUEL VENT FLOAT VALVE - REMOVAL/INSTALLATION

1. General
   A. There are two types of float valves in the fuel vent system. One type is installed horizontally over the vent port of the vent channel in each main and auxiliary fuel tank. The second type is installed vertically on the baffle rib 18 in the main fuel tanks (Fig. 401).
   B. This procedure contains two tasks. The first task removes the float valve. The second task installs the float valve.

TASK 28-13-01-004-012

2. Remove the Float Valve (Fig. 401)
   A. References
      (1) AMM 28-11-01/401, Main Tank Access Door
      (2) AMM 28-11-02/401, Auxiliary Tank Access Door
      (3) AMM 28-26-00/201, Defueling
   B. Access
      (1) Location Zones
          531 Center Auxiliary Tank (Left)
          541 Main Tank - Outboard of Rib No. 10 (Left)
          631 Center Auxiliary Tank (Right)
          641 Main Tank - Outboard of Rib No. 10 (Right)

      (2) Access Panels
          531BB Auxiliary Tank Access Door (Left)
          541HB Main Tank Access Door (Left)
          541XB Main Tank Access Door (Left)
          631BB Auxiliary Tank Access Door (Right)
          641HB Main Tank Access Door (Right)
          641XB Main Tank Access Door (Right)

   C. Procedure

      S 654-013
      (1) Defuel the applicable fuel tank (AMM 28-26-00/201).

      S 014-001
      (2) For the float valves in the auxiliary fuel tanks, remove the applicable left or right auxiliary tank access door, 531BB or 631BB (AMM 28-11-02/401).

BOEING PROPRIETARY - Copyright (C) - Unpublished Work - See title page for details.

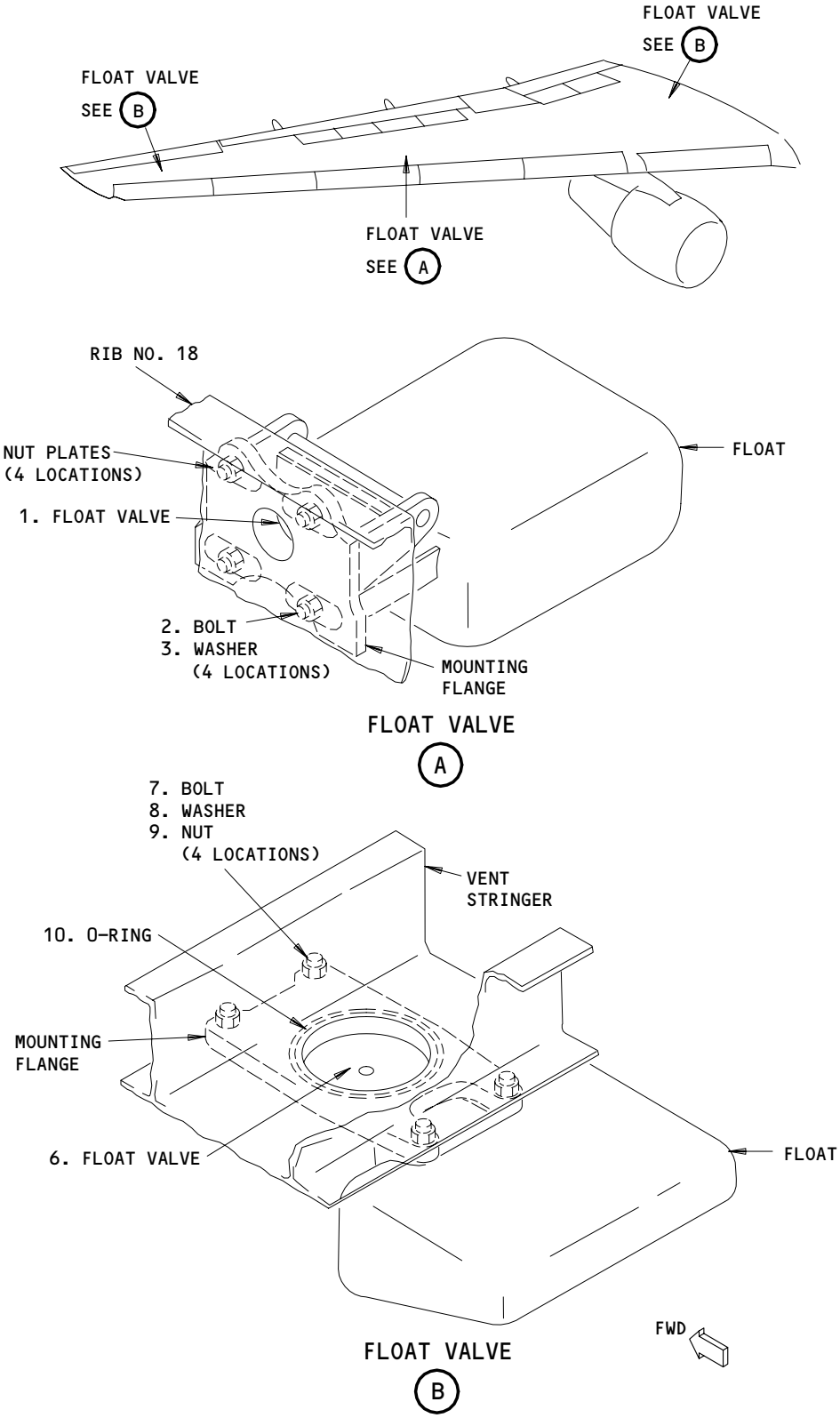

Fuel Vent Float Valve Installation
Figure 401

BOEING PROPRIETARY - Copyright (C) - Unpublished Work - See title page for details.

S 014-002
(3) For the float valves in the left main fuel tank, remove the applicable left main tank access door, 541HB or 541XB (AMM 28-11-01/401).

S 014-003
(4) For the float valves in the right main fuel tank, remove the applicable right main tank access door, 641HB or 641XB (AMM 28-11-01/401).

S 914-004

WARNING: OBEY THE PURGING AND FUEL TANK ENTRY PRECAUTIONS. FAILURE TO OBEY THE FUEL TANK ENTRY PRECAUTIONS CAN CAUSE INJURY OR DAMAGE.

(5) Do the Purging and Fuel Tank Entry procedure (AMM 28-11-00/201).

S 034-014
(6) Remove the bolts (2, 7), washers (3, 8), and the nuts (9) from the float valve (1, 6).

S 024-015
(7) Remove the float valve (1, 6).

S 034-005
(8) For the float valves (6) that are installed horizontally, remove the O-ring (10).

TASK 28-13-01-404-016
3. Install the Float Valve (Fig. 401)

A. References
(1) AMM 12-11-01/301, Fuel Tank Pressure Fueling

BOEING PROPRIETARY - Copyright (C) - Unpublished Work - See title page for details.

(2) AMM 28-11-00/201, Fuel Tanks
(3) AMM 28-11-01/401, Main Tank Access Door
(4) AMM 28-11-02/401, Auxiliary Tank Access Door

B. Access

(1) Location Zones

531	Center Auxiliary Tank (Left)
541	Main Tank - Outboard of Rib No. 10 (Left)
631	Center Auxiliary Tank (Right)
641	Main Tank - Outboard of Rib No. 10 (Right)

(2) Access Panels

531BB	Auxiliary Tank Access Door (Left)
541HB	Main Tank Access Door (Left)
541XB	Main Tank Access Door (Left)
631BB	Auxiliary Tank Access Door (Right)
641HB	Main Tank Access Door (Right)
641XB	Main Tank Access Door (Right)

C. Procedure

S 914-006

WARNING: OBEY THE PURGING AND FUEL TANK ENTRY PRECAUTIONS. FAILURE TO OBEY THE FUEL TANK ENTRY PRECAUTIONS CAN CAUSE INJURY OR DAMAGE.

(1) Obey the fuel tank entry precautions (AMM 28-11-00/201).

S 434-017

(2) For the float valves (6) that are installed horizontally, install a new O-ring (10) in the groove on the mounting flange of the float valve (6).

S 424-007

(3) Set and hold the float valve (1, 6) into position.

BOEING PROPRIETARY - Copyright (C) - Unpublished Work - See title page for details.

S 424-018
(4) Install the bolts (2, 7), washers (3, 8), and nuts (9) on the float valve (1, 6).

S 214-019
(5) Make sure the float and the float valve (1, 6) move freely between the open and closed positions.

S 414-008
(6) For the auxiliary fuel tanks, install the applicable left or right auxiliary tank access door, 531BB or 631BB (AMM 28-11-02/401).

S 414-009
(7) For the left main fuel tank, install the applicable left main tank access door, 541HB or 541XB (AMM 28-11-01/401).

S 414-010
(8) For the right main fuel tank, install the applicable right main tank access door 641HB or 641XB (AMM 28-11-01/401).

S 654-020
(9) Refuel the fuel tank (AMM 12-11-01/301).

S 214-011
(10) Make sure there are no fuel leaks.

BOEING PROPRIETARY - Copyright (C) - Unpublished Work - See title page for details.

FUEL VENT FLOAT DRAIN VALVE - REMOVAL/INSTALLATION

1. General
   A. There are eight float drain valves in the fuel vent system. Each float drain valve is found at the lowest point in the vent tube of each fuel tank when airplane is at usual altitude (Fig. 401).
   B. This procedure contains two tasks. The first task removes the float drain valve. The second task installs the float drain valve.

TASK 28-13-03-004-001

2. Remove the Float Drain Valve (Fig. 401)
   A. References
      (1) AMM 28-11-00/201, Fuel Tank
      (2) AMM 28-11-01/401, Main Tank Access Door
      (3) AMM 28-11-02/401, Auxiliary Tank Access Door
      (4) AMM 28-11-03/401, Surge Tank Access Door
      (5) AMM 28-26-00/201, Defueling
   B. Access
      (1) Location Zones

531	Center Auxiliary Tank (Left)
532	Main Tank - Inboard of Rib No. 10 (Left)
541	Main Tank - Outboard of Rib No. 10 (Left)
542	Surge Tank (Left)
631	Center Auxiliary Tank (Right)
632	Main Tank - Inboard of Rib No. 10 (Right)
641	Main Tank - Outboard of Rib No. 10 (Right)
642	Surge Tank (Right)

      (2) Access Panels

531BB	Auxiliary Tank Access Door (Left)
532BB	Main Tank Access Door (Left)
541JB	Main Tank Access Door (Left)
542AB	Surge Tank Access Door (Left)
631BB	Auxiliary Tank Access Door (Right)
632BB	Main Tank Access Door (Right)
641JB	Main Tank Access Door (Right)
642AB	Surge Tank Access Door (Right)

BOEING PROPRIETARY - Copyright (C) - Unpublished Work - See title page for details.

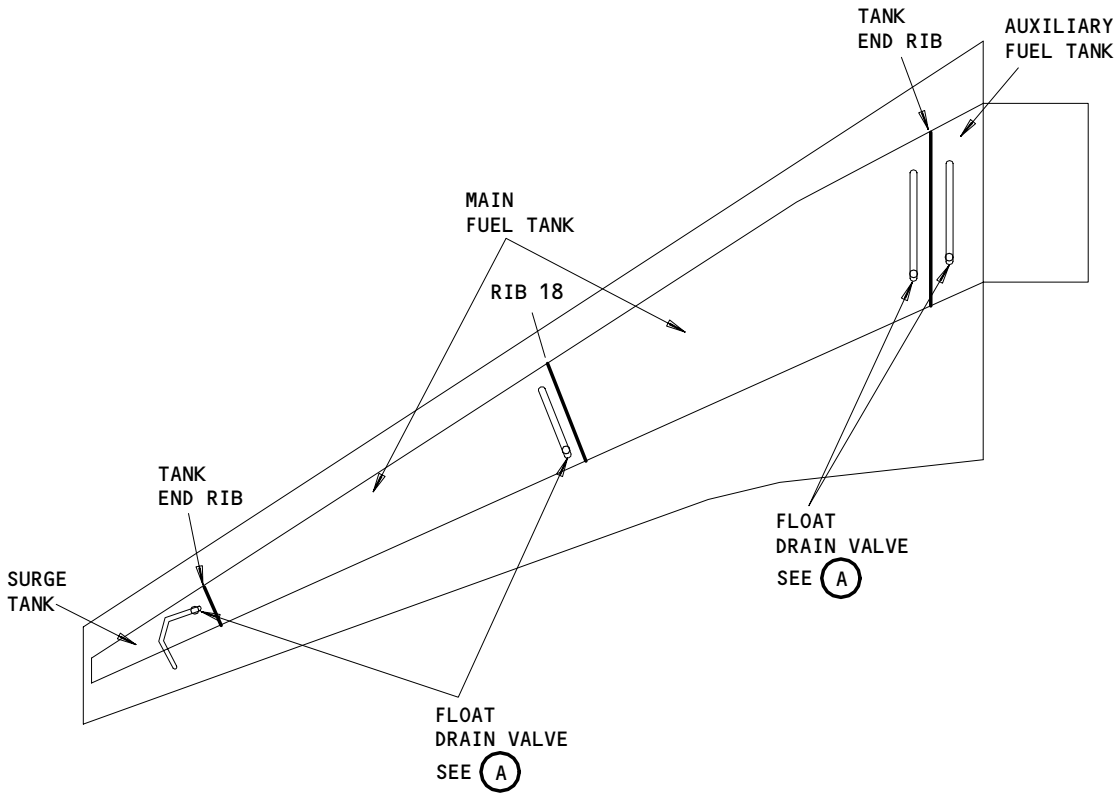

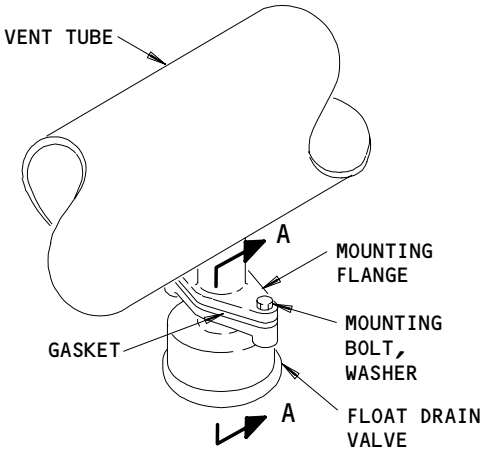

FLOAT DRAIN VALVE
(EXAMPLE)
A

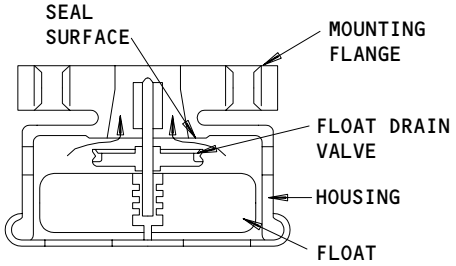

A-A

Fuel Vent Float Drain Valve Installation
Figure 401

BOEING PROPRIETARY - Copyright (C) - Unpublished Work - See title page for details.

C. Procedure

S 654-011
(1) Defuel the applicable fuel tank (AMM 28-26-00/201).

S 014-012
(2) To get access to the float drain valve in the left main fuel tank, remove the applicable left main tank access door, 541JB or 532BB (AMM 28-11-01/401).

S 014-013
(3) To get access to the float drain valve in the right main fuel tank, remove the applicable right main tank access door, 641JB or 632BB (AMM 28-11-01/401).

S 014-014
(4) To get access to the float drain valve in the left or right auxiliary fuel tank, remove the applicable left or right auxiliary tank access door, 531BB or 631BB (AMM 28-11-02/401).

S 014-015
(5) To get access to the float drain valve in the left or right surge tank, remove the applicable left or right surge tank access door, 542AB or 642AB (AMM 28-11-03/401).

S 914-002

WARNING: OBEY THE FUEL TANK ENTRY PRECAUTIONS. FAILURE TO OBEY THE FUEL TANK ENTRY PRECAUTIONS CAN CAUSE INJURY OR DAMAGE.

(6) Obey the fuel tank entry precautions (AMM 28-11-00/201).

S 034-016
(7) Remove the mounting bolts and washers that attach the float drain valve to the vent tube.

BOEING PROPRIETARY - Copyright (C) - Unpublished Work - See title page for details.

S 024-017
(8) Remove the float drain valve and the gasket.

TASK 28-13-03-404-018
3. Install the Float Drain Valve (Fig. 401)
A. References
(1) AMM 12-11-01/301, Fuel Tank Pressure Fueling
(2) AMM 28-11-00/201, Fuel Tank
(3) AMM 28-11-01/401, Main Tank Access Door
(4) AMM 28-11-02/401, Auxiliary Tank Access Door
(5) AMM 28-11-03/401, Surge Tank Access Door
B. Access
(1) Location Zones

531	Center Auxiliary Tank (Left)
532	Main Tank - Inboard of Rib No. 10 (Left)
541	Main Tank - Outboard of Rib No. 10 (Left)
542	Surge Tank (Left)
631	Center Auxiliary Tank (Right)
632	Main Tank - Inboard of Rib No. 10 (Right)
641	Main Tank - Outboard of Rib No. 10 (Right)
642	Surge Tank (Right)

(2) Access Panels

531BB	Auxiliary Tank Access Door (Left)
532BB	Main Tank Access Door (Left)
541JB	Main Tank Access Door (Left)
542AB	Surge Tank Access Door (Left)
631BB	Auxiliary Tank Access Door (Right)
632BB	Main Tank Access Door (Right)
641JB	Main Tank Access Door (Right)
642AB	Surge Tank Access Door (Right)

C. Procedure

S 914-003

WARNING: OBEY THE FUEL TANK ENTRY PRECAUTIONS. FAILURE TO OBEY THE FUEL TANK ENTRY PRECAUTIONS CAN CAUSE INJURY OR DAMAGE.

(1) Obey the fuel tank entry precautions (AMM 28-11-00/201).

S 434-019
(2) Put a seal on the mounting flange on the float valve.

BOEING PROPRIETARY - Copyright (C) - Unpublished Work - See title page for details.

S 424-004
(3) Put the gasket and float drain valve in position and hold.

S 434-020
(4) Install the mounting bolts and washers to attach the float drain valve to the vent tube.

S 214-021
(5) Make sure the float moves freely.

S 414-005
(6) For the left main fuel tank, install the applicable left main tank access door, 532BB or 541JB (AMM 28-11-01/401).

S 414-006
(7) For the right main fuel tank, install the applicable right main tank access door 632BB or 641JB (AMM 28-11-01/401).

S 414-007
(8) For the auxiliary fuel tank, install the left or right auxiliary tank access door, 531BB or 631BB (AMM 28-11-02/401).

S 414-008
(9) For the surge tank, install the left or right surge tank access door, 542AB or 642AB (AMM 28-11-03/401).

S 654-009
(10) Refuel the airplane if it is necessary (AMM 12-11-01/301).

S 214-010
(11) Make sure there are no fuel leaks.

BOEING PROPRIETARY - Copyright (C) - Unpublished Work - See title page for details.

SURGE TANK PRESSURE RELIEF VALVE - MAINTENANCE PRACTICES

1. General
   A. A pressure relief valve of the surge tank is installed on access door 542AB and 642AB in each surge tank.
   B. This procedure contains four tasks. The first task removes the pressure relief valve. The second task installs the pressure relief valve. The third task is a check of the pressure relief settings of the pressure relief valve. The fourth task manually operates the pressure relief valve.

TASK 28-13-04-002-002

2. Remove the Pressure Relief Valve (Fig. 201)
   A. References
      (1) AMM 28-11-03/401, Surge Tank Access Door
   B. Access
      (1) Location Zones
          542 Surge Tank (Left)
          642 Surge Tank (Right)

      (2) Access Panels
          542AB Surge Tank Access Door (Left)
          642AB Surge Tank Access Door (Right)

   C. Procedure

      S 012-003
      (1) Remove the left or right surge tank access door, 542AB or 642AB (AMM 28-11-03/401).

      S 032-004

      WARNING: BE CAREFUL WITH A CLOSED PRESSURE RELIEF VALVE. IF THE PRESSURE RELIEF VALVE MOVES QUICKLY, IT CAN CAUSE INJURY.

      (2) Remove the eight mounting bolts that hold the pressure relief valve to the surge tank access door.

      S 022-005
      (3) Remove the pressure relief valve.

TASK 28-13-04-402-006

3. Install the Pressure Relief Valve (Fig. 201)
   A. References
      (1) AMM 28-11-03/401, Surge Tank Access Door
   B. Access
      (1) Location Zones
          542 Surge Tank (Left)
          642 Surge Tank (Right)

BOEING PROPRIETARY - Copyright (C) - Unpublished Work - See title page for details.

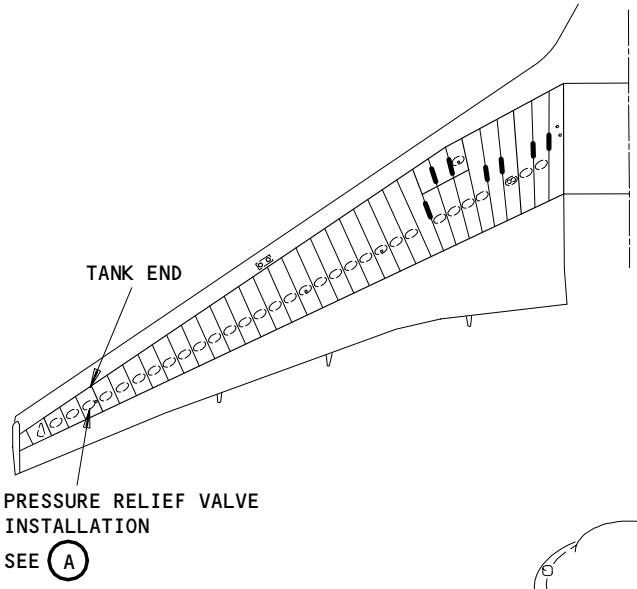

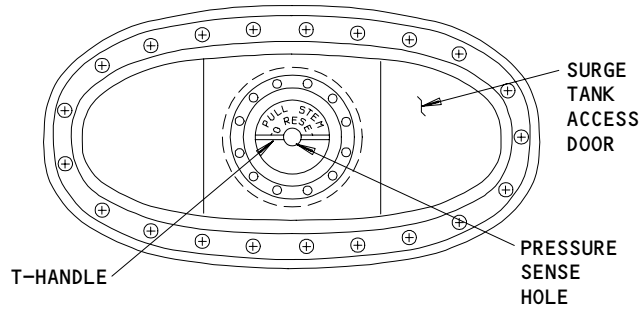

SURGE TANK ACCESS DOOR, 542AB OR 642AB

B

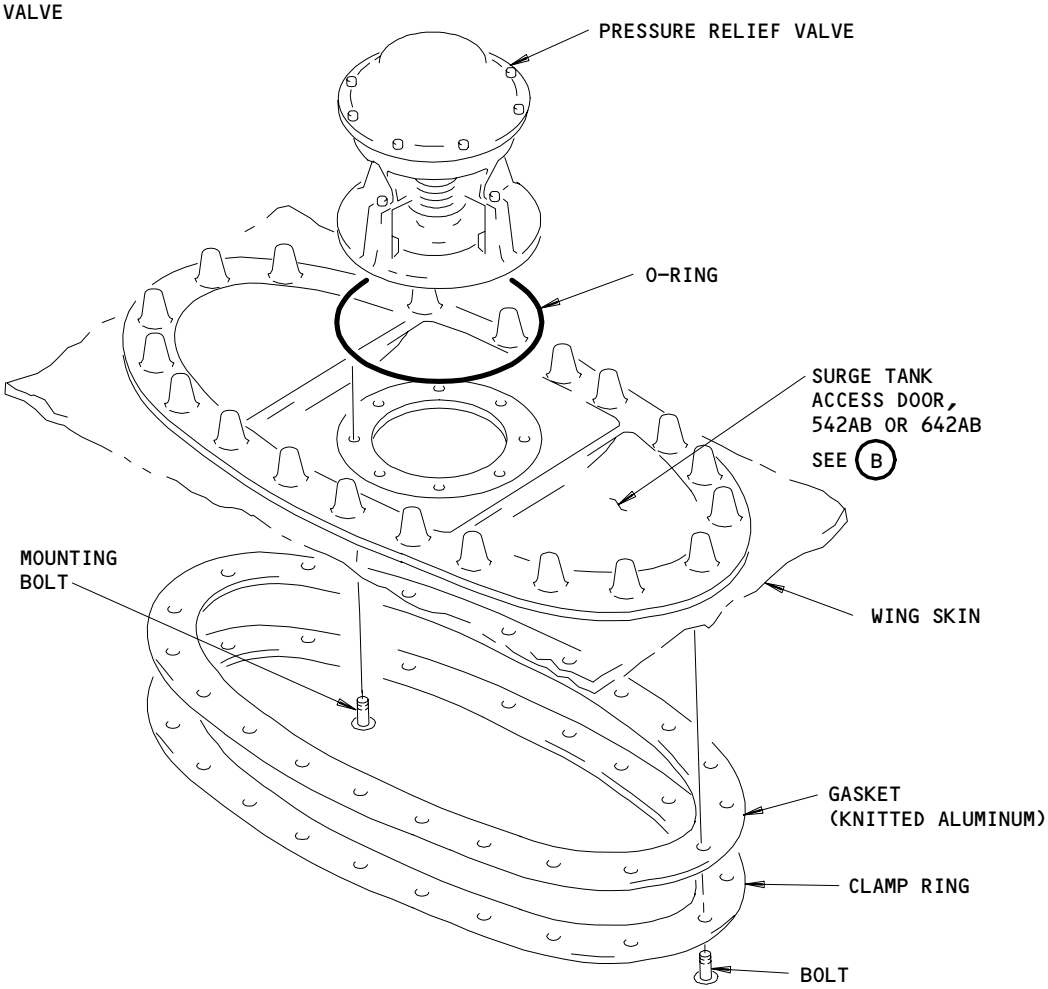

PRESSURE RELIEF VALVE INSTALLATION

A

Surge Tank Pressure Relief Valve
Figure 201

BOEING PROPRIETARY - Copyright (C) - Unpublished Work - See title page for details.

(2) Access Panels
542AB Surge Tank Access Door (Left)
642AB Surge Tank Access Door (Right)

C. Procedure

S 212-007
(1) Make sure the surfaces on the pressure relief valve and the surge tank access door that the O-ring touches are clean and not damaged.

S 432-008
(2) Install a new O-ring.

S 422-009

WARNING: BE CAREFUL WITH A CLOSED PRESSURE RELIEF VALVE. IF THE PRESSURE RELIEF VALVE MOVES QUICKLY, IT CAN CAUSE INJURY.

(3) Align the pressure relief valve on the surge tank access door.

S 432-010
(4) Install the eight mounting bolts on the pressure relief valve.

S 412-011
(5) Install the surge tank access door, 542AB or 642AB (AMM 28-11-03/401).

TASK 28-13-04-782-041
4. Check of the Pressure Relief Settings of the Pressure Relief Valve
A. Equipment
(1) Pressure source - range 0 to +1.5 psig, commercially available.
(2) Vacuum source - range of 0 to -3.00 psig, commercially available.
(3) Check Fixture - Surge Tank Pressure Relief Valve, G28005-29 Recommended, (-14, -18, -23 optional)
B. Access
(1) Location Zones
542 Surge Tank (Left)
642 Surge Tank (Right)

(2) Access Panels
542AB Surge Tank Access Door (Left)
642AB Surge Tank Access Door (Right)

C. Check of the Pressure Relief Settings of the Pressure Relief Valve

S 032-013
(1) Remove the four bolts from the left or right surge tank access door, 542AB or 642AB.

BOEING PROPRIETARY - Copyright (C) - Unpublished Work - See title page for details.

S 482-014
(2) Put and hold the check fixture on the exit of the pressure relief valve.

S 482-015
(3) Install the check fixture bolts.

S 492-016
(4) Connect the pressure source to the check fixture.

S 862-017
(5) Slowly and continuously supply a positive pressure of more than 1.00 psig.

S 222-018
(6) Make sure the pressure relief valve opens between 1.00 and 1.25 psig.

S 862-019
(7) Put the pressure to 0 psig.

S 092-020
(8) Remove the pressure source.

S 082-021
(9) Hold the check fixture and remove the check fixture bolts.

S 082-022
(10) Remove the check fixture.

S 822-023
(11) Pull the T-handle down until the pressure relief valve sets again.

S 082-024
(12) Put and hold the check fixture on the exit of the pressure relief valve.

S 082-025
(13) Install the check fixture bolts.

S 092-026
(14) Install the vacuum source on the check fixture.

S 862-027
(15) Slowly and continuously supply a vacuum pressure of more than -2.50 psig.

S 222-028
(16) Make sure the pressure relief valve opens between -2.50 and -2.75 psig.

BOEING PROPRIETARY - Copyright (C) - Unpublished Work - See title page for details.

S 862-029
(17) Put the pressure to 0 psig.

S 092-030
(18) Remove the vacuum source.

S 082-031
(19) Hold onto the check fixture and remove the check fixture bolts.

S 082-032
(20) Remove the check fixture.

S 432-033
(21) Install the four bolts on the surge tank access door.

S 432-034
(22) Tighten the bolts to 30-40 pound-inches.

S 222-035
(23) Pull the T-handle down until the pressure relief valve sets again.

TASK 28-13-04-982-040

5. Manually Operate the Pressure Relief Valve

A. Access

(1) Location Zones

542 Surge Tank (Left)
642 Surge Tank (Right)

(2) Access Panels

542AB Surge Tank Access Door (Left)
642AB Surge Tank Access Door (Right)

B. Manually Operate the Pressure Relief Valve

S 092-036
(1) Put a screwdriver into the pressure sense hole on the left or right surge tank access door, 542AB or 642AB.

S 982-037
(2) Push up on the screwdriver.

S 212-038
(3) Make sure the pressure relief valve opens.

NOTE: There is a loud noise and the pressure relief valve moves away from the screwdriver, when the pressure relief valve opens.

BOEING PROPRIETARY - Copyright (C) - Unpublished Work - See title page for details.

S 822-039

(4) Pull the T-handle down until the pressure relief valve sets again.

BOEING PROPRIETARY - Copyright (C) - Unpublished Work - See title page for details.

SURGE TANK PRESSURE RELIEF VALVE - INSPECTION/CHECK

TASK 28-13-04-706-044

1. Pressure Relief Valve - Bonding Resistance Check (Fig. 601)
   A. General
      (1) This procedure contains a functional check of the bonding resistance between the pressure relief valve and the surge tank access door.
   B. References
      (1) AMM 28-11-03/401, Surge Tank Access Door
      (2) SWPM 20-20-00, Electrical Bonds and Grounds
   C. Equipment
      (1) Bonding Meter - Use one of these:
         (a) Bonding Meter - T477W
             Avtron Manufacturing Co.
             Cleveland, OH
         (b) Bonding Meter - Model M1
             (Serial Number A000012 and subsequent)
             BCD Electronics Ltd.
             Vancouver, Canada
   D. Access
      (1) Location Zones
          542 Surge Tank (Left)
          642 Surge Tank (Right)

      (2) Access Panels
          542AB Surge Tank Access Door (Left)
          642AB Surge Tank Access Door (Right)

   E. Prepare for the Procedure

      S 016-002
      (1) Remove the left or right surge tank access door, 542AB or 642AB (AMM 28-11-03/401).
   F. Electrical Bonding Measurement

      S 766-041
      (1) Measure the electrical bonding resistance between the surge tank pressure relief valve and the access door (SWPM 20-20-00).
         (a) Make sure the electrical bonding resistance is 0.010 ohm (10 milliohms) or less.

BOEING PROPRIETARY - Copyright (C) - Unpublished Work - See title page for details.

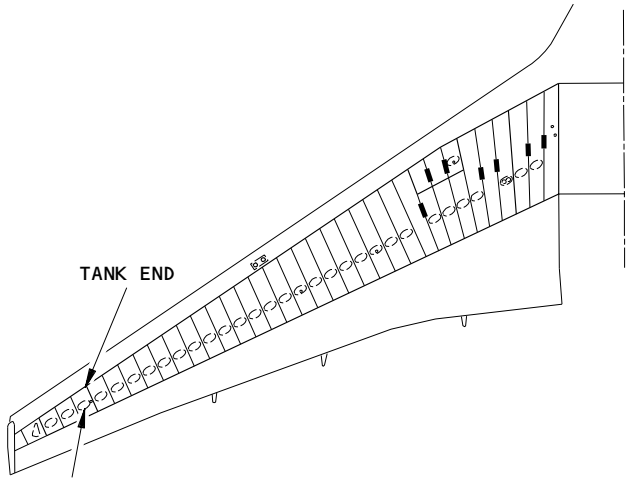

LEFT WING
(RIGHT WING IS OPPOSITE)

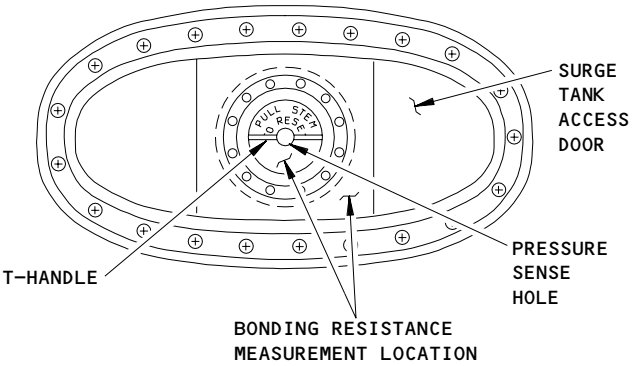

LEFT (RIGHT) SURGE TANK
ACCESS DOOR, 542AB (642AB)

B

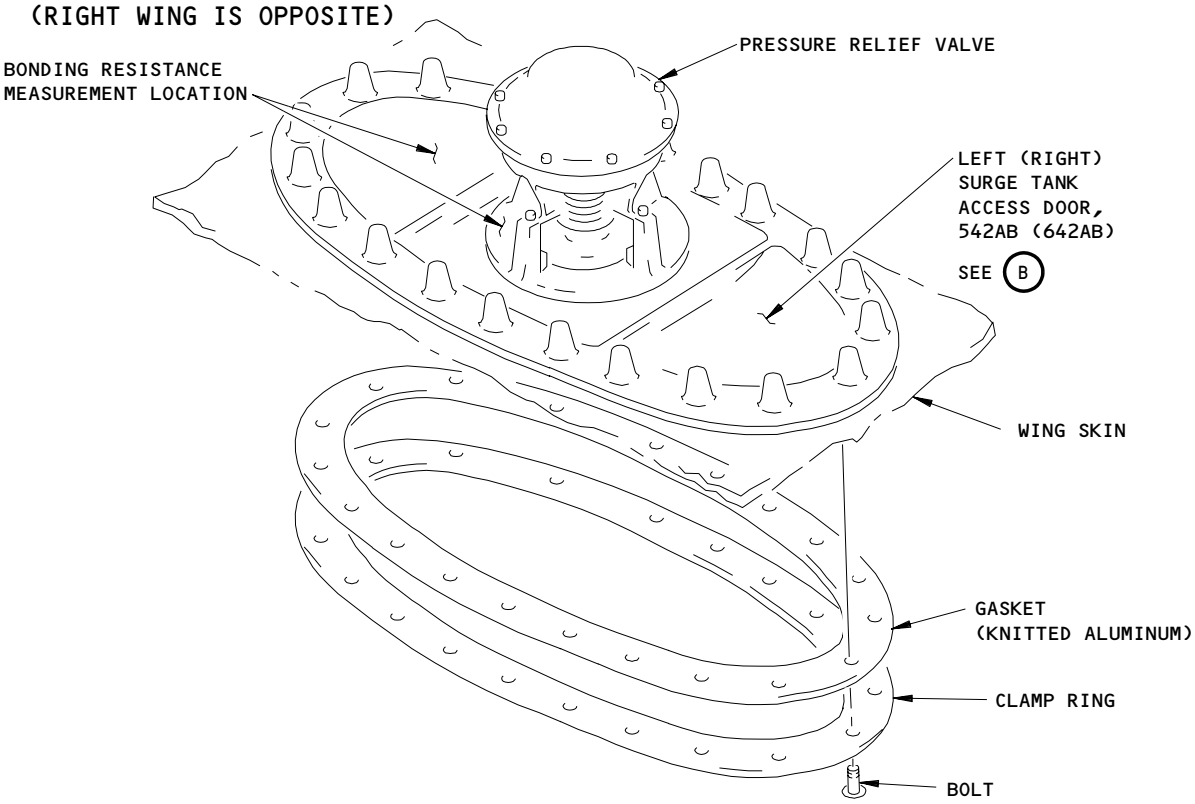

PRESSURE RELIEF VALVE

A

Surge Tank Pressure Relief Valve Inspection
Figure 601

BOEING PROPRIETARY - Copyright (C) - Unpublished Work - See title page for details.

S 766-043

(2) Measure the electrical bonding resistance between the surge tank access door and the poppet face (SWPM 20-20-00).

(a) Make sure the electrical bonding resistance is 1.0 ohm (1000 milliohms) or less.

G. Put the Airplane Back to Its Usual Condition

S 416-042

(1) Install the left or right surge tank access door, 542AB or 642AB (AMM 28-11-03/401).

BOEING PROPRIETARY - Copyright (C) - Unpublished Work - See title page for details.

SURGE TANK VENT FLAME ARRESTOR - REMOVAL/INSTALLATION

1. General
   A. A stainless steel flame arrestor is installed in each fuel vent of the surge tank (Fig. 401).
   B. This procedure contains two tasks. The first task removes the flame arrestor. The second task installs the flame arrestor.

TASK 28-13-05-004-001

2. Remove the Flame Arrestor (Fig. 401)
   A. References
      (1) AMM 06-44-00/201, Wing Access Doors and Panels
      (2) AMM 12-11-03/301, Fuel Sump Draining
      (3) AMM 20-41-00/201, Static Grounding
      (4) AMM 24-22-00/201, Electrical Power Control
   B. Access
      (1) Location Zones
          561 Rear Spar to Trailing Edge (Left)
          661 Rear spar to Trailing Edge (Right)

      (2) Access Panels
          561PB Lower Trailing Edge Panel (Left)
          661PB Lower Trailing Edge Panel (Right)

   C. Procedure

      S 214-008
      (1) Make sure the airplane is grounded to an approved ground (AMM 20-41-00/201).

      S 914-009
      (2) Remove electrical power from the airplane (AMM 24-22-00/201).

      S 494-010
      (3) Disconnect the airplane battery and attach a OPEN FUEL TANKS - DO NOT CONNECT sign.

      S 494-011
      (4) Put ropes around the outboard area of the wing and install DANGER - OPEN FUEL TANKS signs.

BOEING PROPRIETARY - Copyright (C) - Unpublished Work - See title page for details.

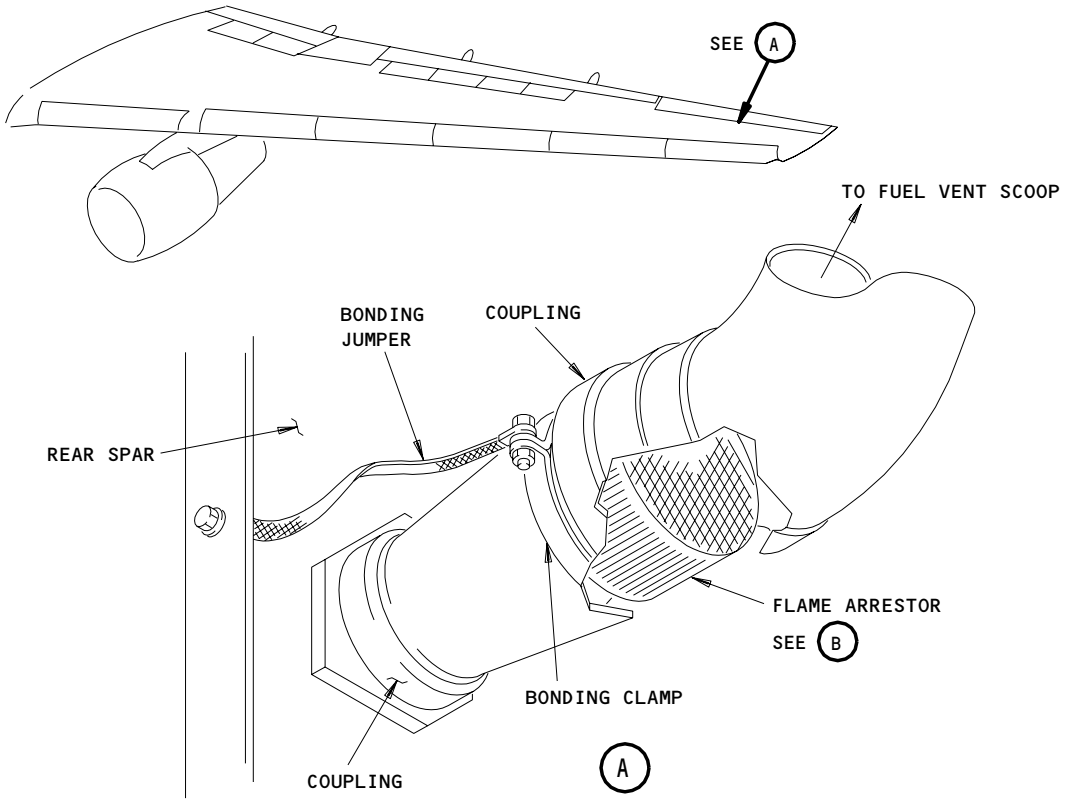

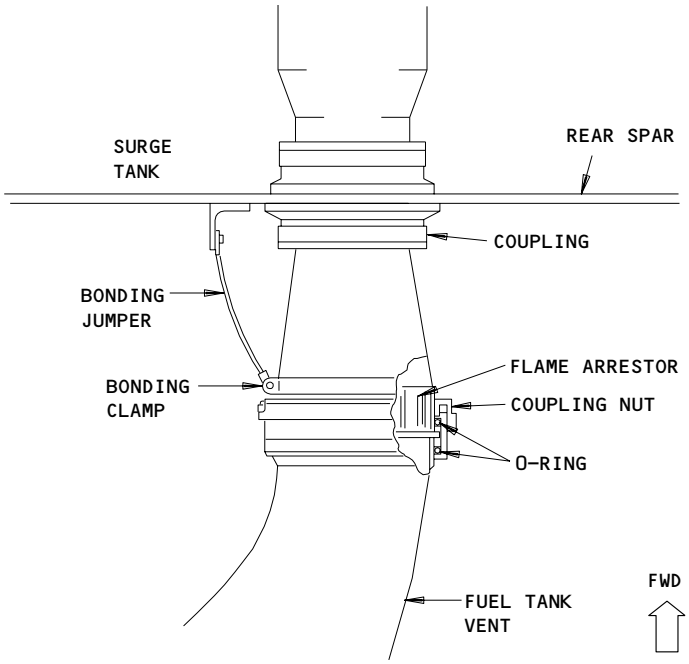

FLAME ARRESTOR

B

Surge Tank Flame Arrestor Installation
Figure 401

BOEING PROPRIETARY - Copyright (C) - Unpublished Work - See title page for details.

S 914-002
(5) For the applicable surge tank, open the sump drain valve and drain the fuel tank sump (AMM 12-11-03/301).

S 014-012
(6) Remove the left or right lower trailing edge access panel, 561PB or 661PB (AMM 06-44-00/201).

S 034-013
(7) Remove the bonding jumper and the bonding clamp from the fuel tank vent.

S 034-014
(8) Loosen the coupling at the rear spar.

S 024-015
(9) Remove the fuel tank vent.

S 034-027
(10) Remove and discard the o-ring.

S 034-016
(11) Remove the coupling on the fuel tank vent.

S 034-017
(12) Remove the part of the fuel tank vent that contains the flame arrestor.

S 034-028
(13) Remove and discard the two o-rings.

S 024-018
(14) Remove the flame arrestor from the fuel tank vent.

TASK 28-13-05-404-019
3. Install the Flame Arrestor (Fig. 401)
A. References
(1) AMM 06-44-00/201, Wing Access Doors and Panels
(2) AMM 20-10-21/601, Electrical Bonding
(3) AMM 24-22-00/201, Electrical Power Control

BOEING PROPRIETARY - Copyright (C) - Unpublished Work - See title page for details.

(4) AMM 28-22-07/401, Fuel Lines and Fittings

B. Access

(1) Location Zones

561 Rear Spar to Trailing Edge (Left)
661 Rear spar to Trailing Edge (Right)

(2) Access Panels

561PB Lower Trailing Edge Panel (Left)
661PB Lower Trailing Edge Panel (Right)

C. Procedure

S 424-003

CAUTION: BE CAREFUL WHEN YOU INSTALL THE FLAME ARRESTOR IN THE FUEL TANK VENT. CAREFULLY PUSH THE FLAME ARRESTOR INTO THE FUEL TANK VENT. IF YOU ARE NOT CAREFUL, DAMAGE TO THE HONEYCOMB CORE OF THE FLAME ARRESTOR CAN OCCUR.

(1) Install the flame arrestor into the fuel tank vent.

NOTE: The arrestor should be a tight fit. Push the arrestor into the fuel tank vent tube until the flange on the arrestor touches the ferrule on the tube.

S 434-030

(2) Install two new o-rings on the the fuel tank vent coupling.

S 434-020

(3) Install the coupling on the fuel tank vent (Fig. 401). See Flexible Full Coupling Installation, AMM 28-22-07/401.

S 434-004

(4) Install lockwire on the coupling.

S 434-031

(5) Install one new o-ring on the vent tube end that connects to the spar.

S 434-021

(6) Connect the fuel tank vent to the coupling at the rear spar (Fig. 401). See Rigid Coupling Installation, AMM 28-22-07/401.

S 434-022

(7) Install lockwire on the coupling at the rear spar.

S 434-023

(8) Install the bonding jumper and the bonding clamp.

BOEING PROPRIETARY - Copyright (C) - Unpublished Work - See title page for details.

S 224-024
(9) Make sure the bonding resistance between the bonding jumper and the airplane structure is not more than 0.01 ohms (AMM 20-10-21/601).

S 414-025
(10) Install the left or right lower trailing edge access panel, 561PB or 661PB (AMM 06-44-00/201).

S 094-005
(11) Remove the ropes and signs from around the outboard area of the wing.

S 094-006
(12) Remove the sign and connect the airplane battery.

S 914-007
(13) Supply electrical power (AMM 24-22-00/201).

BOEING PROPRIETARY - Copyright (C) - Unpublished Work - See title page for details.

SURGE TANK DRAIN CHECK VALVE

1. General
   A. A drain check valve for each surge tank is installed inboard of each end rib in the main fuel tank. The drain check valve lets the surge tank drain into the auxiliary fuel tank and prevents fuel flow in the opposite direction.
   B. This procedure contains two tasks. The first task removes the drain check valve. The second task installs the drain check valve.

TASK 28-13-06-004-001

2. Remove the Drain Check Valve (Fig. 401)
   A. References
      (1) AMM 28-11-02/401, Auxiliary Tank Access Door
   B. Access
      (1) Location Zones
          531 Center Auxiliary Tank (Left)
          631 Center Auxiliary Tank (Right)

      (2) Access Panels
          531BB Auxiliary Tank Access Door (Left)
          631BB Auxiliary Tank Access Door (Right)

   C. Procedure

      S 014-008
      (1) Remove the auxiliary tank access door, 531BB or 631BB (AMM 28-11-02/401).

      S 014-007
      (2) Get access to the drain check valve, which is aft of the auxiliary tank access door and inboard of the end rib of the main fuel tank.

      S 034-006
      (3) Loosen the coupling nut and ring.

BOEING PROPRIETARY - Copyright (C) - Unpublished Work - See title page for details.

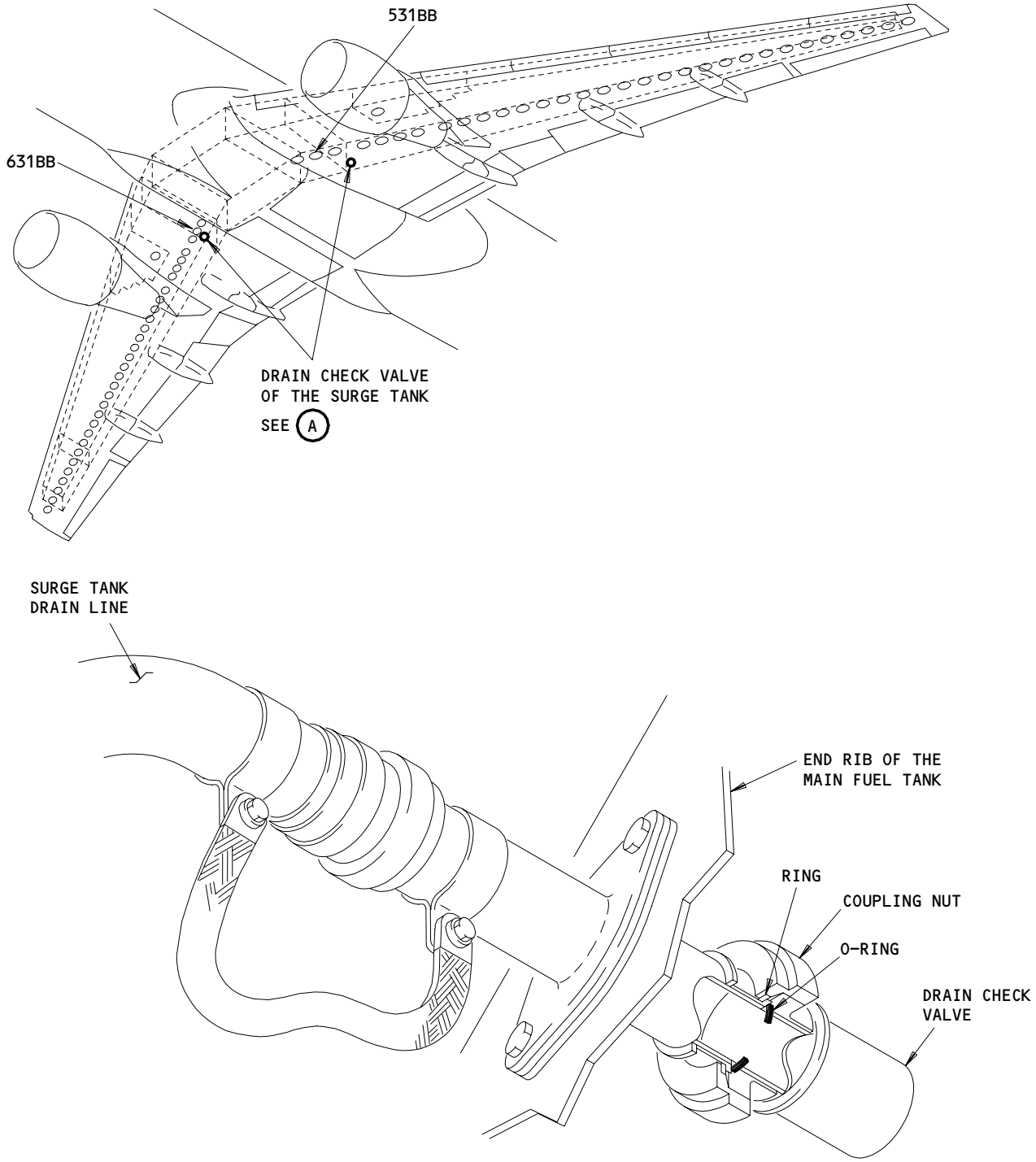

DRAIN CHECK VALVE OF THE SURGE TANK

A

Surge Tank Drain Check Valve Installation
Figure 401

BOEING PROPRIETARY - Copyright (C) - Unpublished Work - See title page for details.

S 024-009
(4) Remove the drain check valve from the coupling nut.

TASK 28-13-06-404-005
3. Install the Drain Check Valve (Fig. 401)
A. References
(1) AMM 28-11-02/401, Auxiliary Tank Access Door
B. Access
(1) Location Zones
531 Center Auxiliary Tank (Left)
631 Center Auxiliary Tank (Right)

(2) Access Panels
531BB Auxiliary Tank Access Door (Left)
631BB Auxiliary Tank Access Door (Right)

C. Procedure

S 434-004
(1) Install a new O-ring.

S 424-003
(2) Install the drain check valve in the coupling nut.

S 414-002
(3) Install the auxiliary tank access door, 531BB or 631BB (AMM 28-11-02/401).

BOEING PROPRIETARY - Copyright (C) - Unpublished Work - See title page for details.

SURGE TANK DRAIN LINE - INSPECTION/CHECK

1. General
   A. This procedure has one task, to do a check for leaks in the drain line for the surge tank.

TASK 28-13-07-796-001

2. Surge Tank Drain Line Leak Check
   A. Equipment
      (1) F72951-1 - Manometer, water safety relief or equivalent (Fig. 601)
      (2) Source - Air pressure, 0 to 10 psi, with regulator and shutoff valve
      (3) Plugs - rubber, to close the surge tank drain line
      (4) Adapter - to connect the air source to the drain line
      (5) T-fitting - to attach the air pressure source and water manometer to the drain line for the surge tank
   B. Consumable Materials
      (1) G00835 - Leak Check, Bubble Type
   C. References
      (1) AMM 28-11-00/201, Integral Fuel Tanks
      (2) AMM 28-11-01/401, Main Tank Access Door
      (3) AMM 28-11-02/401, Center Auxiliary Tank Access Door
      (4) AMM 28-22-07/401, Fuel Lines and Fittings
   D. Access
      (1) Location Zones
          531 Center Auxiliary Tank (Left)
          541 Main Tank - Outboard of Rib No. 10 (Left)
          631 Center Auxiliary Tank (Right)
          641 Main Tank - Outboard of Rib No. 10 (Right)

      (2) Access Panels
          531BB Auxiliary Tank Access Door (Left)
          541XB Main Tank Access Door (Left)
          631BB Auxiliary Tank Access Door (Right)
          641XB Main Tank Access Door (Right)

   E. Procedure (Fig. 602)

      S 016-002

      WARNING: OBEY ALL OF THE SAFETY PRECAUTIONS WHEN YOU DO THE PURGING AND ENTRY PROCEDURE. INJURY TO PERSONS AND DAMAGE TO EQUIPMENT CAN OCCUR.

      (1) Do this procedure: "Purging and Fuel Tank Entry" for the applicable main tank and the auxiliary tank (AMM 28-11-00/201).

BOEING PROPRIETARY - Copyright (C) - Unpublished Work - See title page for details.

S 016-003
(2) Remove the applicable access panel (AMM 28-11-02/401) to get access to the check valve for the surge tank drain line (Fig. 602).

NOTE: Remove the access panel, 531BB, for the left drain line.
Remove the access panel, 631BB, for the right drain line.

S 496-004
(3) Put a rubber plug in the check valve for the drain line to close it.

S 016-005
(4) Remove the applicable access panel (AMM 28-11-01/401) to get access to the fitting on the drain line immediately inboard of the surge tank wall.

NOTE: Remove the access panel, 541XB, for the left drain line.
Remove the access panel, 641XB, for the right drain line.

S 486-007
(5) Connect the pressure source (10 psi) to the T-fitting.

S 486-008
(6) Connect the water manometer or the pressure gage to the T-fitting (Fig. 603).

S 036-009
(7) Disconnect the drain line at the Wiggins fitting in the main tank adjacent to rib 31 (the outboard wall of the main tank) (AMM 28-22-07/401).

S 486-010
(8) Use the adapter to connect the remaining end of the T-fitting to the open end of the drain line (Fig. 603).

S 016-006
(9) If you are scheduled to do a check of the left drain line, remove the access panel, 541HB, (AMM 28-11-01/401) to get access to the relief port valve.
(a) Install a rubber plug on the relief port valve.

BOEING PROPRIETARY - Copyright (C) - Unpublished Work - See title page for details.

S 796-011

CAUTION: DO NOT PRESSURIZE THE DRAIN LINE TO MORE THAN A MAXIMUM OF 11 PSI. DAMAGE TO THE DRAIN LINE CAN OCCUR.

(10) Carefully pressurize the drain line to 10 psi +/- 1 psi.
  (a) If it is not possible to pressurize the drain line to 10 psi, the drain line has a leak.

S 976-012
(11) Monitor the pressure on the gage for five minutes to make sure the pressure is stable.

S 976-013
(12) Close the shutoff valve on the pressure source and record the pressure on the gage.

S 976-014
(13) Monitor the pressure gage for 15 minutes.

S 796-015
(14) If the pressure decreases by more than 0.05 psi (1.75 inches of water), the drain line has a leak.
  (a) With the drain line pressurized to 10 psi, use bubble solution to find the fitting or the section that has the leak.
  (b) Repair the fitting that has the leak or replace the section of the line that has the leak (AMM 28-22-07/401).

S 796-016
(15) If the pressure decreases by less than 0.05 psi (1.75 inches of water), the drain line does not have a leak.

S 796-017
(16) Decrease the pressure in the drain line to 0 psi.

F. Put the Airplane Back to Its Usual Condition

S 096-018

CAUTION: MAKE SURE YOU REMOVE THE PLUGS THAT YOU INSTALLED. DAMAGE TO THE AIRPLANE CAN OCCUR IF YOU DO NOT REMOVE THE PLUGS.

(1) Remove the plug in the check valve for the drain line.

BOEING PROPRIETARY - Copyright (C) - Unpublished Work - See title page for details.

S 416-023
(2) Install the access panel (531BB for the left, 631BB for the right) (AMM 28-11-02/401) that you removed to get access to the check valve.

S 086-019
(3) Disconnect the air pressure source and the water manometer from the drain line at the fitting adjacent to rib 31 (the outboard wall of the main tank).

S 436-020
(4) Connect the drain line to the Wiggins fitting adjacent to rib 31 again (AMM 28-22-07/401).

S 416-021
(5) Install the access panel (541XB for the left, 641XB for the right) (AMM 28-11-01/401) that you removed to get access to the Wiggins fitting.

S 416-022
(6) Do these steps if you did a pressure test of the left drain line:
    (a) Remove the plug in the relief port valve if you installed one.
    (b) Install the access panel, 541HB, (AMM 28-11-01/401) that you removed to get access to the relief port valve.

BOEING PROPRIETARY - Copyright (C) - Unpublished Work - See title page for details.

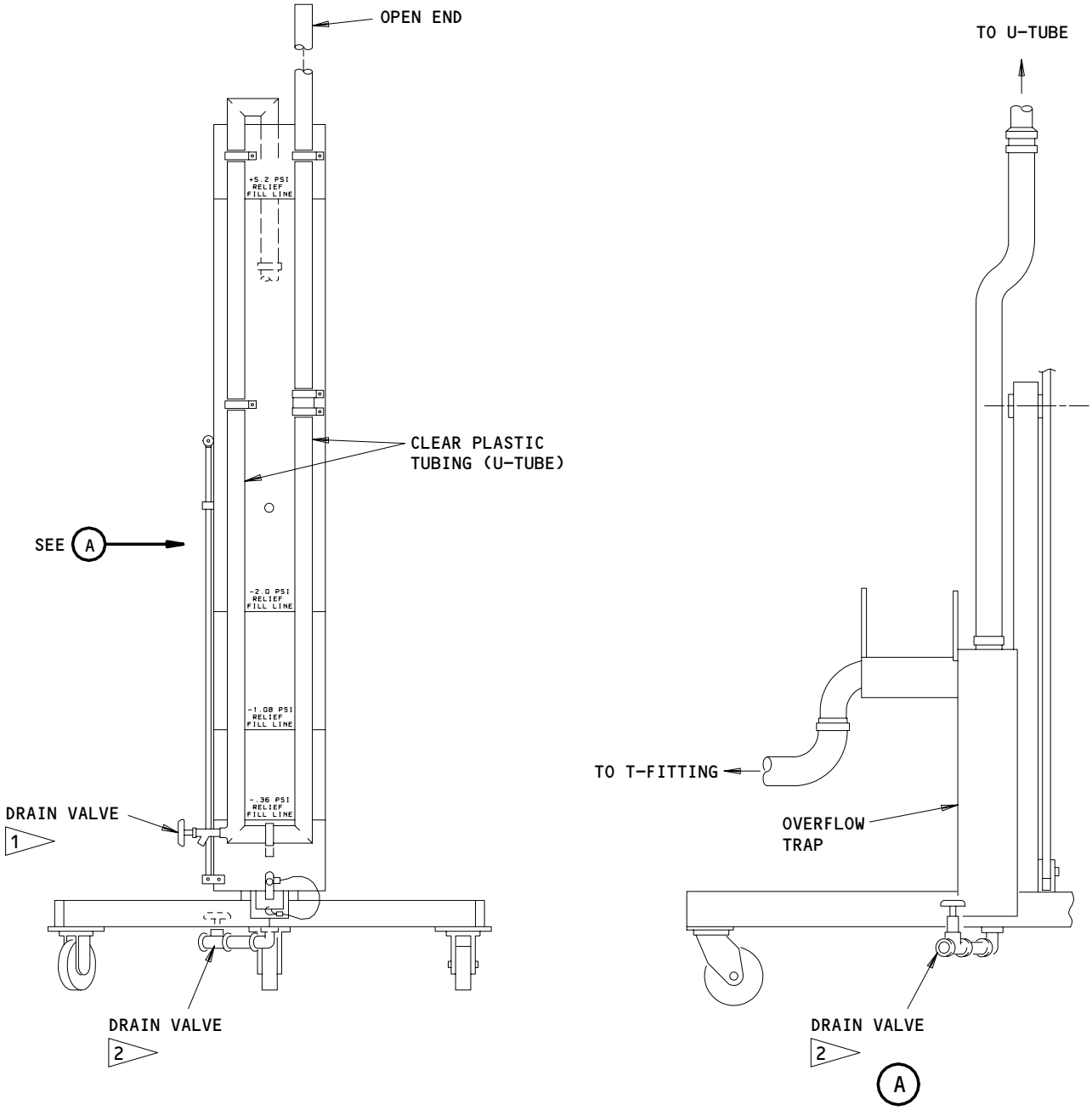

NOTE: DRAIN MANOMETER
WHEN NOT IN USE
TO PREVENT FREEZING.

1 USE VALVE TO ADJUST FILL LEVEL AND TO DRAIN TUBING

2 USE VALVE TO DRAIN OVERFLOW TRAP

Water Safety Relief Manometer Assembly
Figure 601

BOEING PROPRIETARY - Copyright (C) - Unpublished Work - See title page for details.

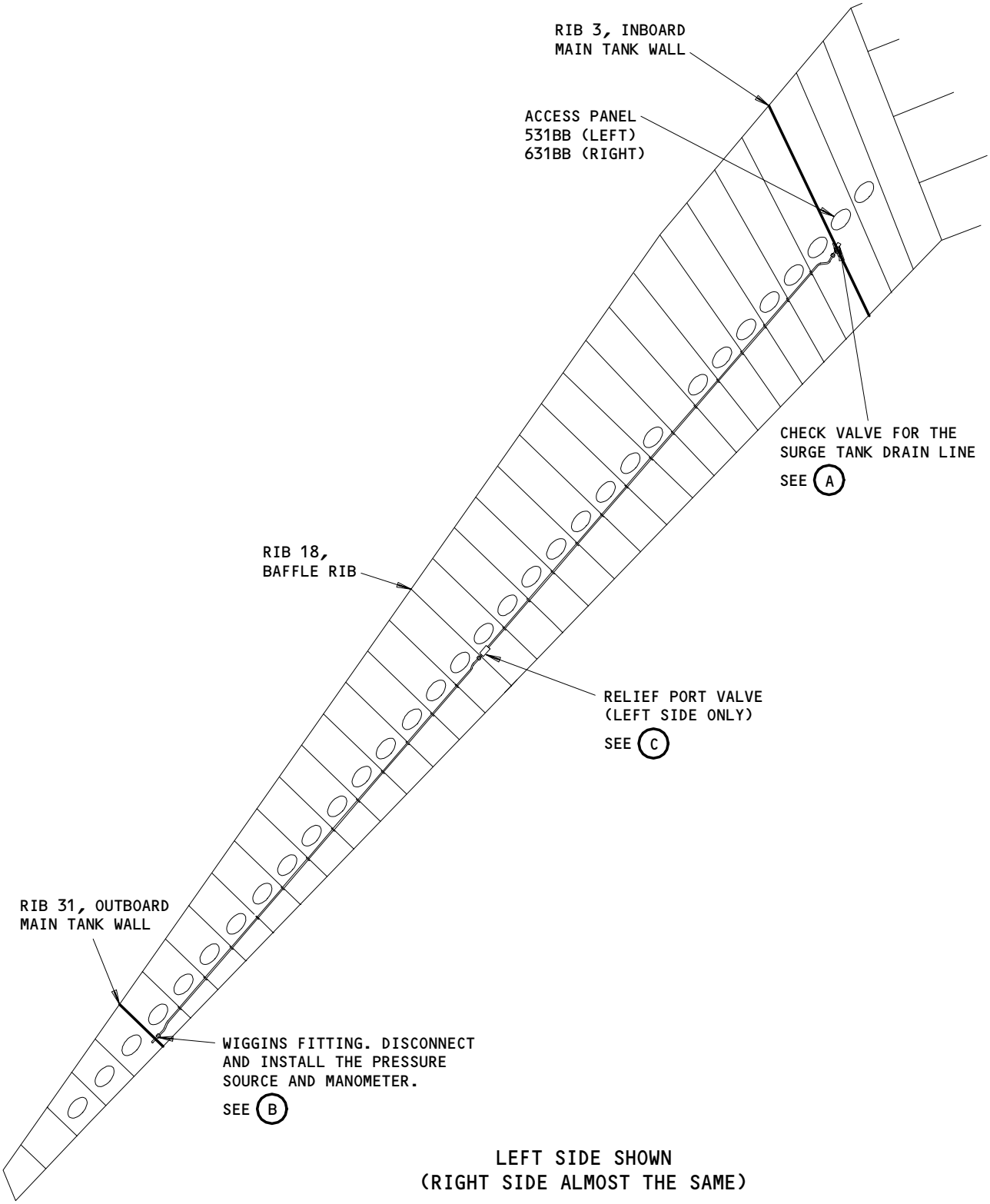

LEFT SIDE SHOWN
(RIGHT SIDE ALMOST THE SAME)

Surge Tank Drain Line
Figure 602 (Sheet 1)

BOEING PROPRIETARY - Copyright (C) - Unpublished Work - See title page for details.

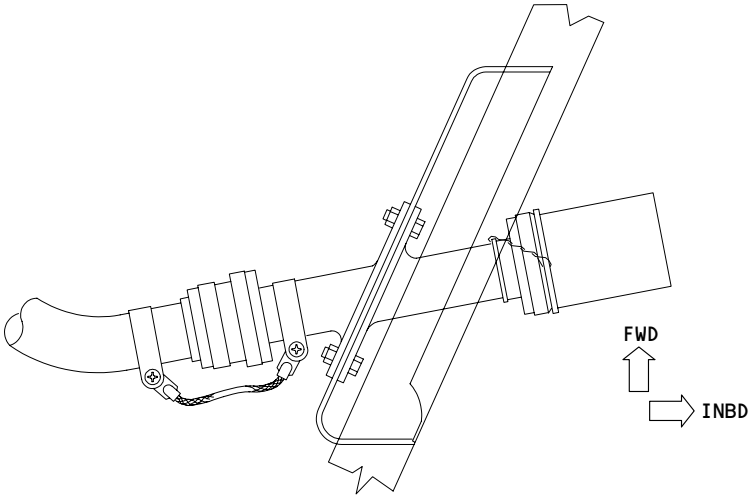

CHECK VALVE FOR THE
SURGE TANK DRAIN LINE

A

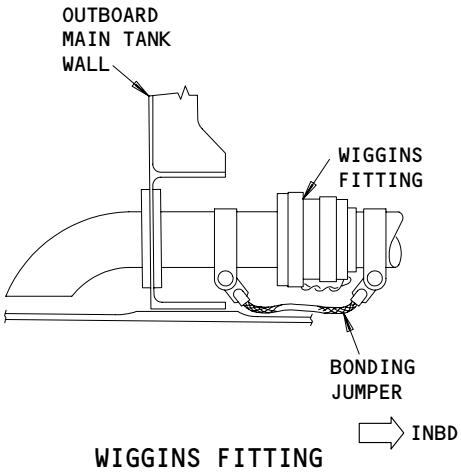

WIGGINS FITTING

B

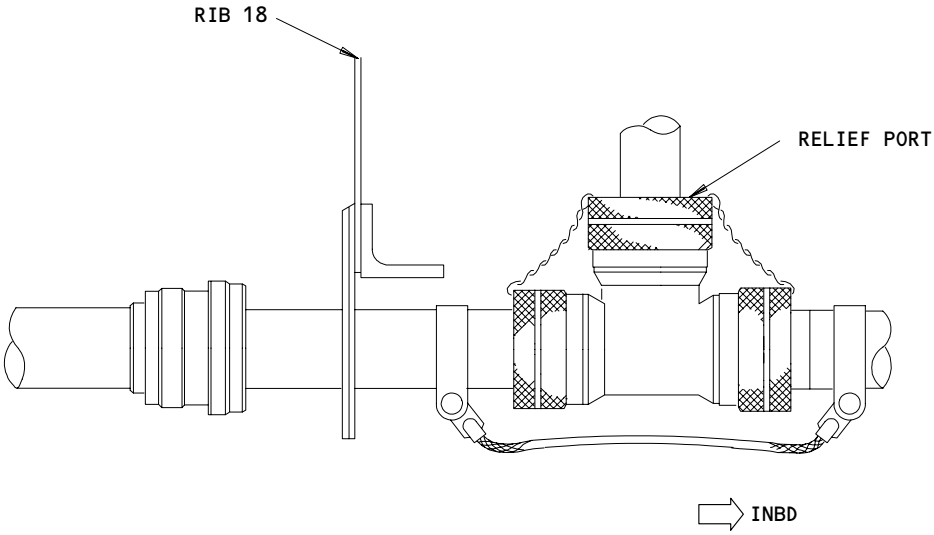

RELIEF PORT VALVE
(LEFT SIDE ONLY)

C

Surge Tank Drain Line
Figure 602 (Sheet 2)

BOEING PROPRIETARY - Copyright (C) - Unpublished Work - See title page for details.

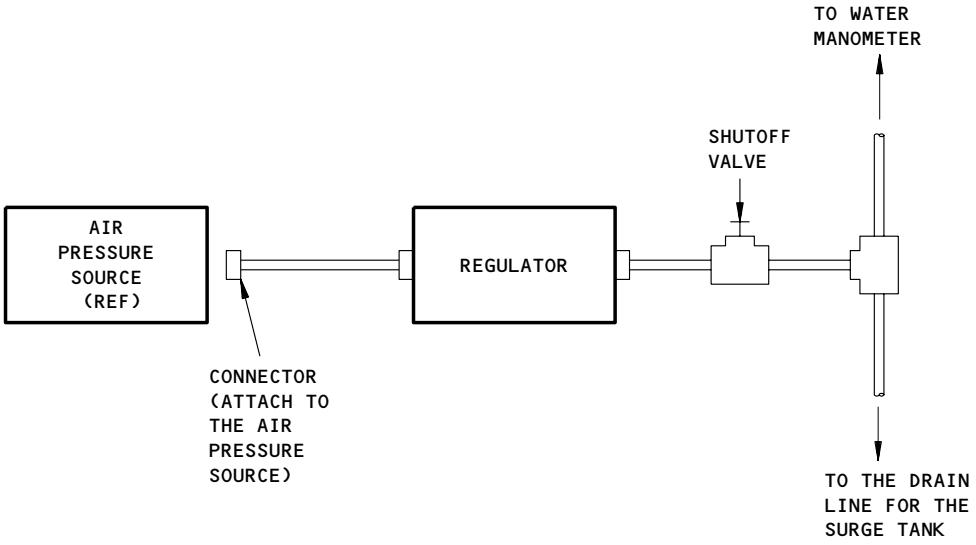

Pressure Check Equipment
Figure 603

BOEING PROPRIETARY - Copyright (C) - Unpublished Work - See title page for details.

PRESSURE FUELING SYSTEM - DESCRIPTION AND OPERATION

1. General (Fig. 1)
   A. The pressure fueling system provides a rapid means of filling the fuel tanks in the airplane. The fuel quantity indicating system (FQIS) processor controls the fueling operation of the automatic mode but the fueling crew can operate the system manually if necessary.
   B. The system distributes fuel from the fueling station, through the fueling manifold and fueling shutoff valves to the tanks.
   C. The fueling station, located on the leading edge of the left wing, contains a fueling control panel and two fueling adapters. The fueling adapters are installed on the front spar and connect to the fueling manifold. The fueling adapters provide fuel inlet into the fueling manifold.
   D. A fueling manifold extends from the fueling station to the rear spar and across the two main fuel tanks. Fuel flows from the fueling station through the fueling manifold, then through the fueling shutoff valves into the main and auxiliary fuel tanks.
   E. MTH 276-999;
      SAS 150-154 POST-SB 28-27;
      SAS 050-149, 155-999;
      The fueling manifold is part of the fuel jettison manifold.
   F. A drain check valve is installed on the fueling manifold in each outer compartment of the auxiliary fuel tank. The drain check valve permits fuel to drain out of the fueling manifold into the auxiliary fuel tank after fueling.
   G. A vacuum valve is installed between the fueling manifold and the surge tank drain line in the left main fuel tank. The manifold vacuum valve permits air to go into the fueling manifold from the surge tank drain line. This makes sure that the fueling manifold will drain after the fueling operations.
   H. Six fueling shutoff valves connect between the main fueling manifold and its branch lines. The branch lines direct fuel into each of the fuel tanks. The fueling shutoff valves control the flow of fuel from the main fueling manifold into the branch lines.
   I. Swing check valves are installed into the branch lines. They prevent back flow of fuel from the tanks into the fueling manifold during suction defueling.
   J. The wetting sense lines connect the outflow side of the inboard fueling shutoff valve in each main fuel tank with the fuel boost pumps. The fuel boost pumps prime during the pressure fueling operation.
   K. Defueling valves connect the pressure fueling system to the engine fuel feed system (AMM 28-26-00/001).
   L. The fueling control panel, P28, found at the fueling station, controls the pressure fueling system. The panel contains all the switches and indicators needed to perform the fueling operation.

BOEING PROPRIETARY - Copyright (C) - Unpublished Work - See title page for details.

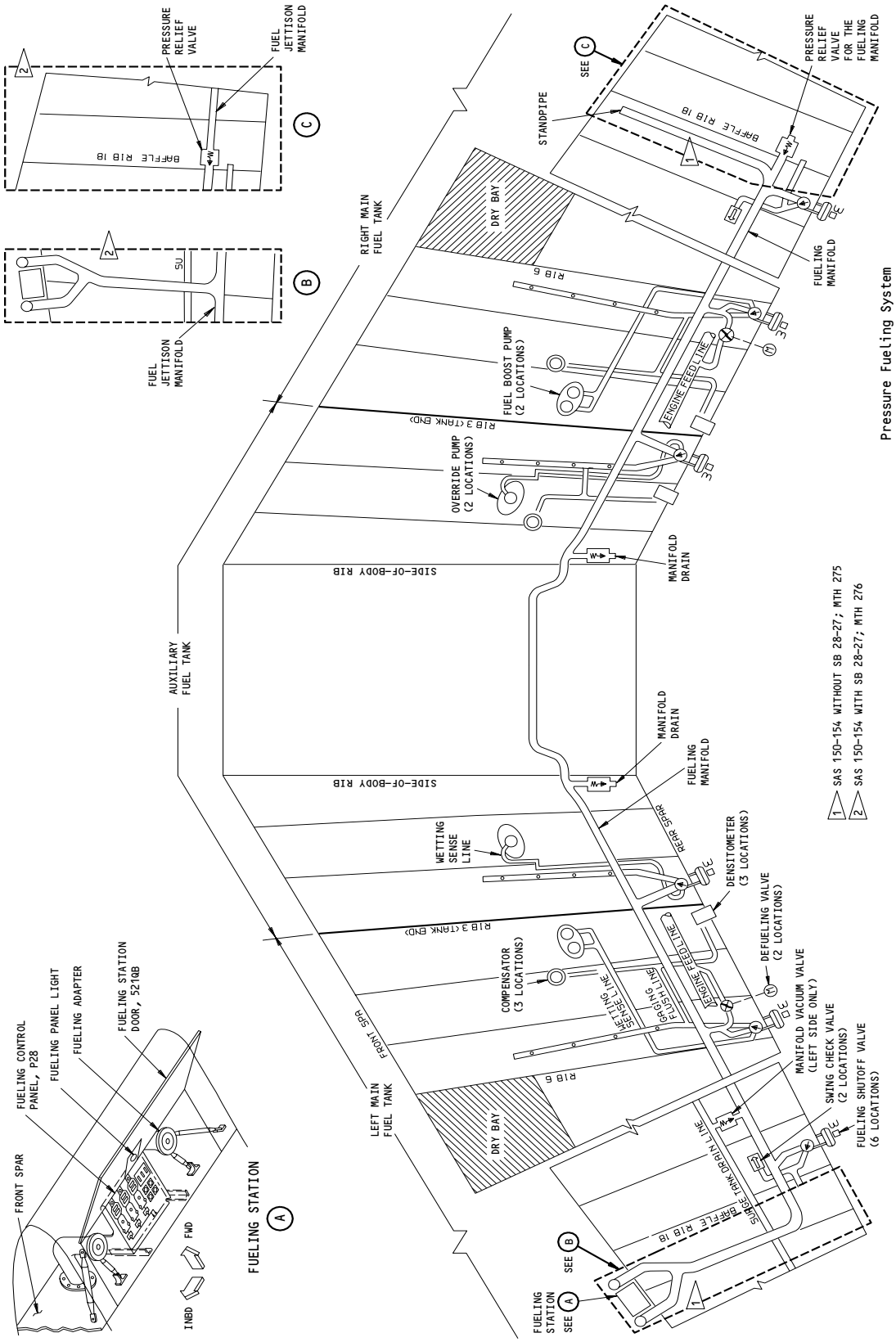

Pressure Fueling System
Figure 1 (Sheet 1)

BOEING PROPRIETARY - Copyright (C) - Unpublished Work - See title page for details.

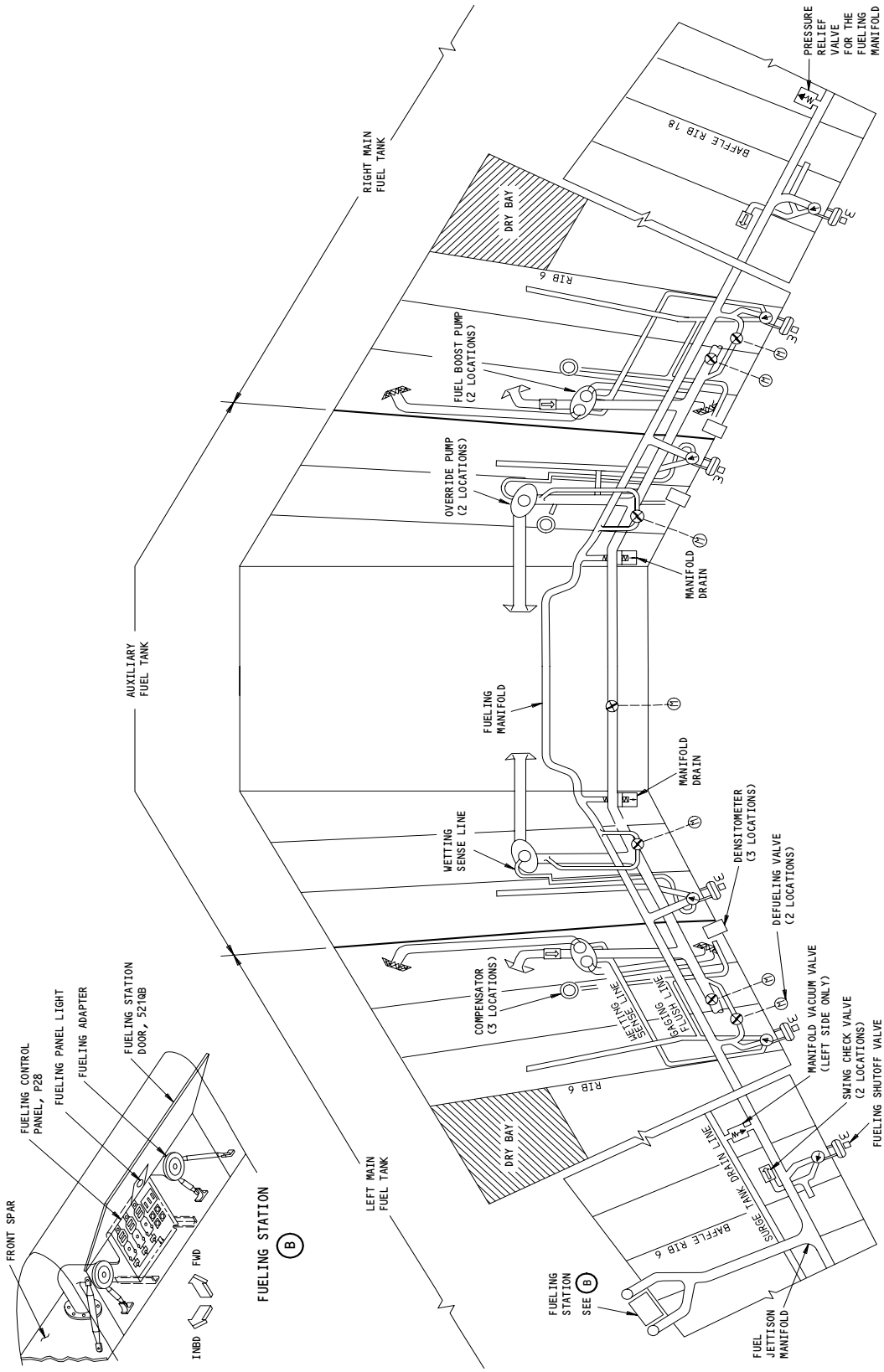

Pressure Fueling System
Figure 1 (Sheet 2)

697304

BOEING PROPRIETARY - Copyright (C) - Unpublished Work - See title page for details.

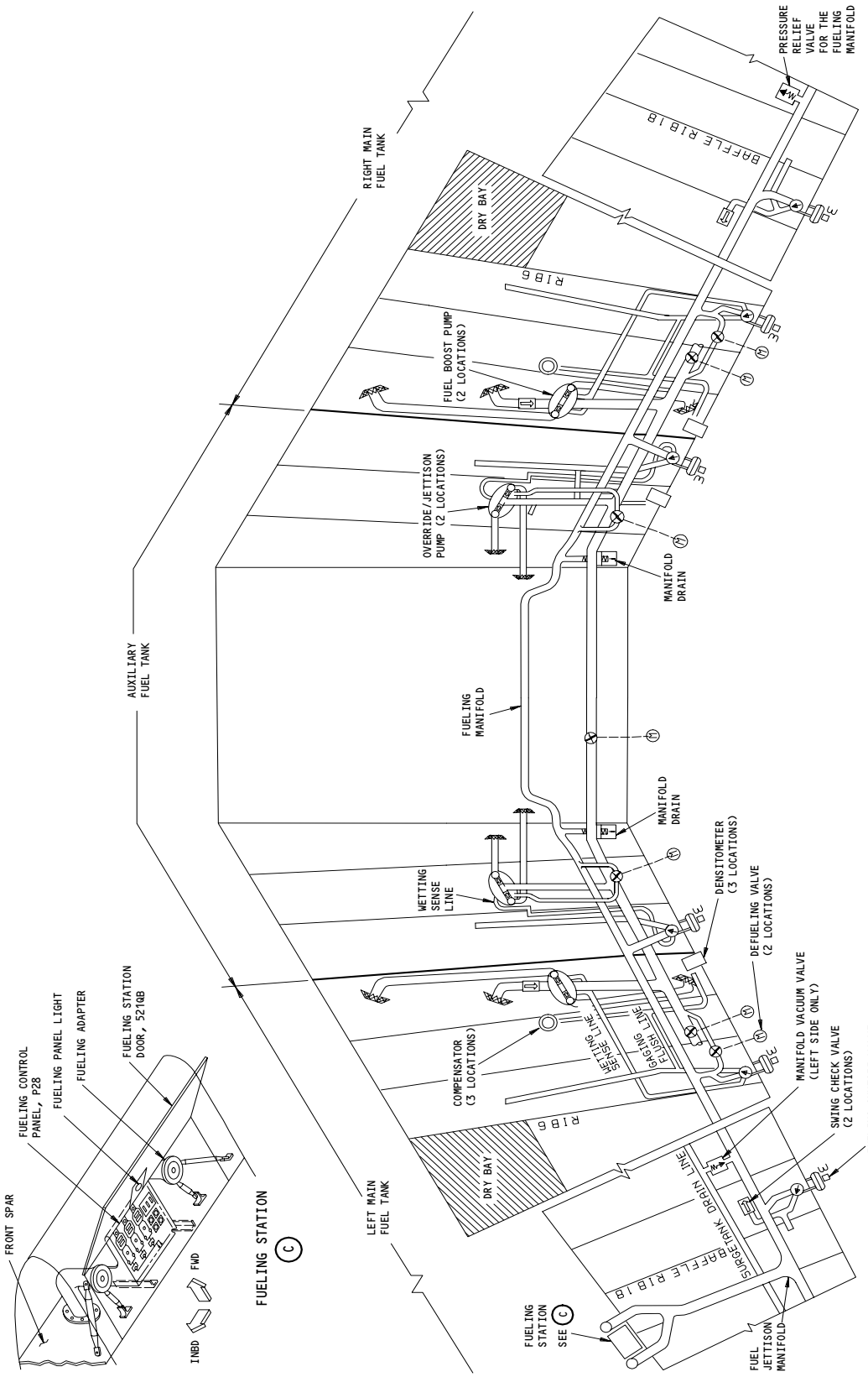

Pressure Fueling System
Figure 1 (Sheet 3)

719402

BOEING PROPRIETARY - Copyright (C) - Unpublished Work - See title page for details.

M. An overfill system prevents fuel spills.

2. Component Details

A. Fueling Adapter (Fig. 2)

(1) Two fueling adapters found at the fueling station are installed on the forward face of the front spar. The fueling adapter consists of a housing which contains a primary poppet, a sliding valve, a FUEL/DEFUEL cam. The housing connects to the fueling manifold. The adapter flange permits connection to any standard MS29520 type fueling nozzle.

(2) With the fueling vehicle nozzle disconnected, the primary poppet and the sliding valve remain in the closed position.

(3) Connecting the fueling vehicle nozzle to the adapter opens the primary poppet. Setting the FUEL/DEFUEL cam to FUEL and applying fuel pressure with the fueling vehicle opens the sliding valve. This allows fuel to flow into the fueling manifold. With no fuel pressure applied by the fueling vehicle the sliding valve remains closed preventing any backflow from the fueling manifold into the fueling adapter. With the FUEL/DEFUEL cam set to DEFUEL, pins lock the plug valve and the sliding valve together. The cam then lifts and opens both valves to allow defueling.

B. Fueling Shutoff Valve Assembly (Fig. 3)

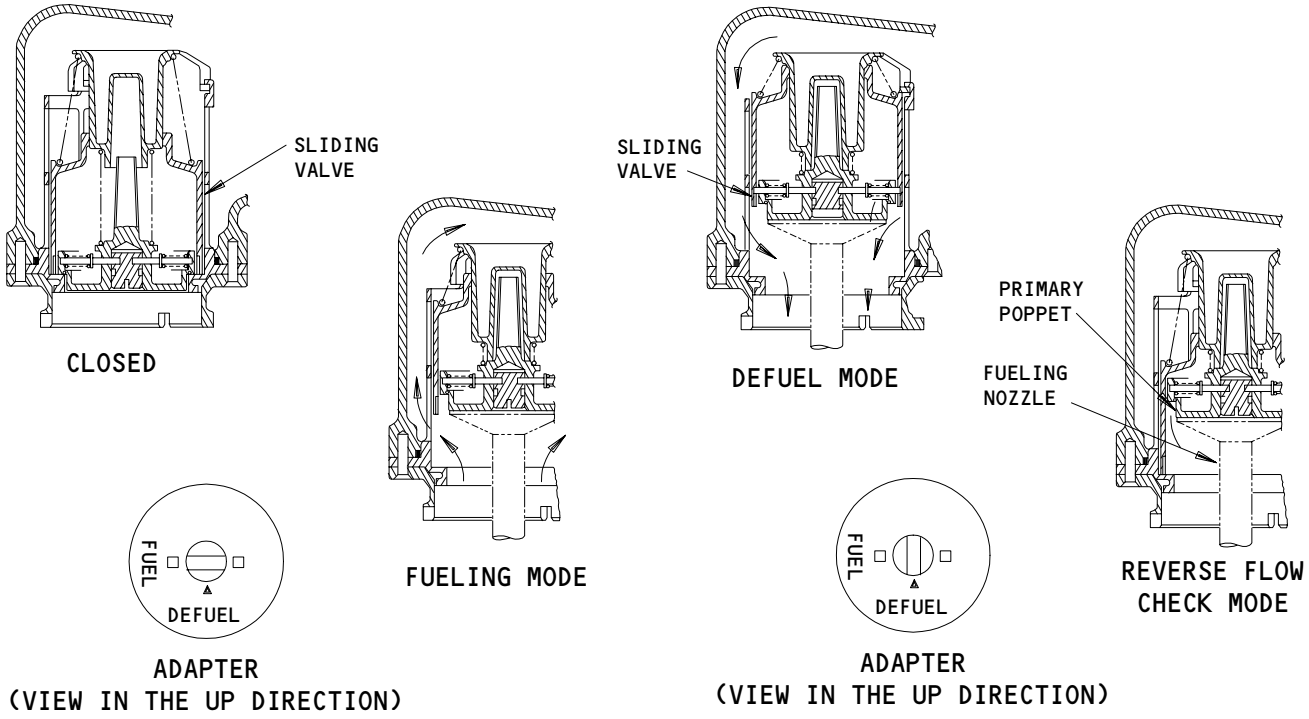

Fueling Adapter
Figure 2

BOEING PROPRIETARY - Copyright (C) - Unpublished Work - See title page for details.

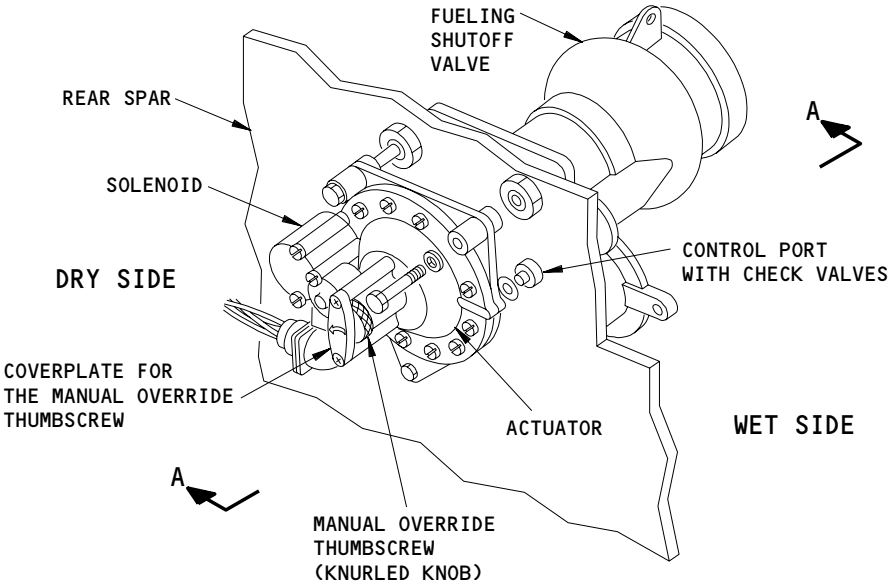

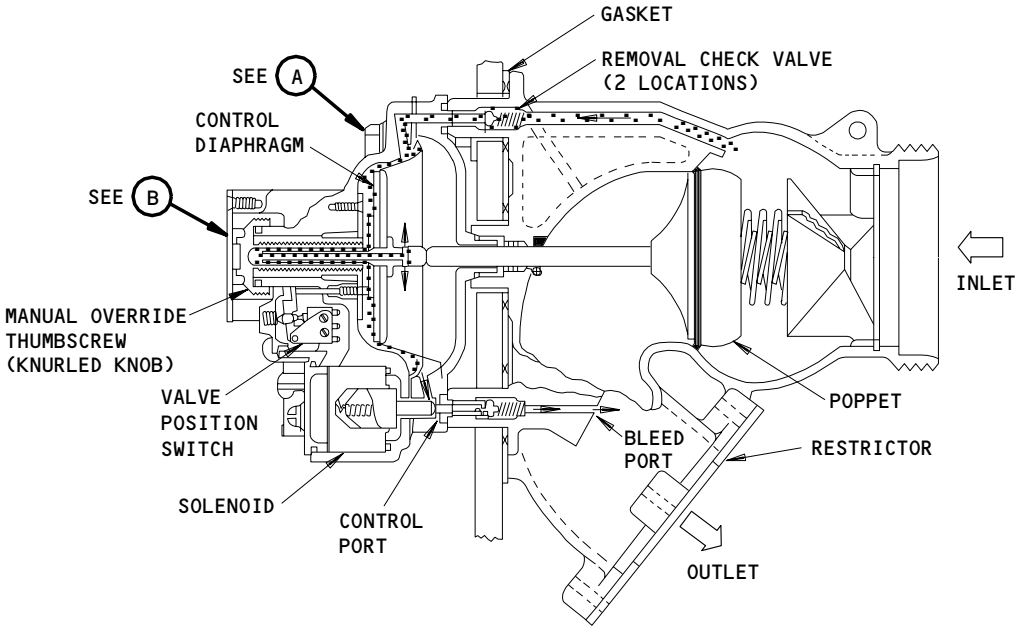

FUELING SHUTOFF VALVE AND ACTUATOR

A–A

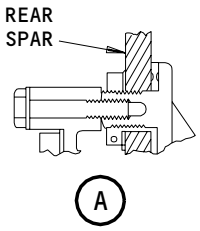

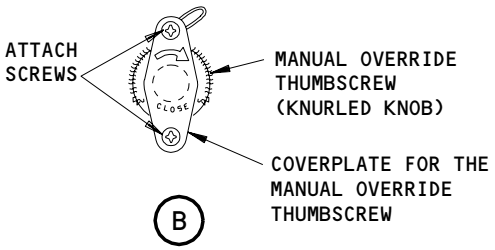

NOTE: DO NOT REMOVE THE COVERPLATE LOCKWIRE, SCREWS, OR THE COVERPLATE. FUEL LEAK CAN OCCUR IF YOU REMOVE THESE SCREWS.

Fueling Shutoff Valve Assembly
Figure 3

BOEING PROPRIETARY - Copyright (C) - Unpublished Work - See title page for details.

(1) The fueling shutoff valve assembly unit consists of two components: the fueling shutoff valve and the actuator. The two components connect through an opening in the rear spar.

(2) The fueling shutoff valve is a poppet type valve, which connects the fueling manifold and the fuel tank. The fueling shutoff valve is installed on the front of the spar. Studs pass through an opening in the spar and lock into position by retaining nuts. Two control ports pass through the spar to connect with passages in the actuator leading to the actuator control diaphragm. Removable check valves fit in the control ports. It is necessary to defuel the applicable fuel tank to replace the fueling shutoff valve.

(3) The actuator for the fueling shutoff valve is installed on the rear of the rear spar. The actuator engages with the two control ports which protrude through the rear spar. The actuator is held in position by three bolts which screw into threaded holes in the valve mounting studs. The actuator houses a control diaphragm, fuel passages for diaphragm control, a solenoid operated pilot valve, valve position switch, and the override screw. Actuator replacement does not require defueling.

(4) Operation of the Fueling Shutoff Valve Assembly

(a) Fueling Shutoff Valve

1) When fuel under pressure enters the valve inlet, fuel pressure and spring tension keep the valve in its closed position.

(b) Actuator for the Fueling Shutoff Valve

1) When fuel under pressure enters the valve inlet with the valve closed, fuel flows through a passage to the solenoid side of the control diaphragm. A passage through the shaft connects cavities on both sides of the control diaphragm. Actuating the solenoid controlled pilot valve opens a larger outlet passage on the tank side of the control diaphragm. The difference in fuel pressure moves the control diaphragm in a direction that forces the poppet open.

2) To close the valve with pressure in the fueling manifold, de-energize the solenoid valve. With the flow stopped, pressures equalize on both sides of the control diaphragm, allowing the spring loaded poppet to close. Spring pressure holds the poppet closed with pressure removed from the fueling manifold.

3) The valve position light provides the fueling station with an indication of the position of the fueling shutoff valve.

BOEING PROPRIETARY - Copyright (C) - Unpublished Work - See title page for details.

(c) Manual Operation

1) The fueling valve shutoff opens or closes manually by turning the manual override thumbscrew (knurled knob) 10 to 13 complete revolutions. Clockwise rotation closes the valve. Counterclockwise movement opens it. A lockwire secures the manual override thumbscrew in the closed position.

NOTE: The manual override thumbscrew turns easier if the fueling manifold is unpressurized.

Do not remove the cover plate lockwire, screws, or the cover plate. Fuel leaks can occur if you remove these screws.

C. Drain Check Valves and Vacuum Valve for the Fueling Manifold (Fig. 4)

(1) The drain check valve and the vacuum valve are similar except for plug valve operating pressures.

(2) The drain check valves are found at low points in the fueling manifold. One drain check valve is found in each outer compartment of the auxiliary fuel tank. Each drain check valve connects to the fueling manifold outboard of the side-of-body rib.

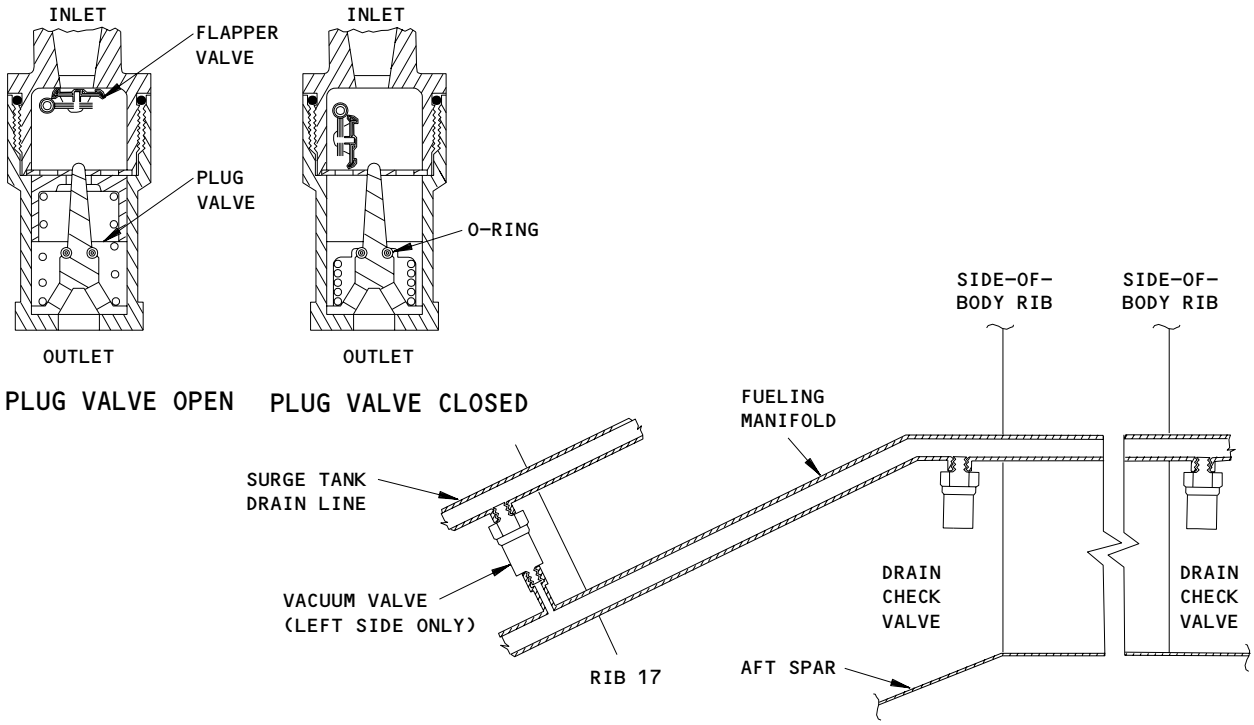

Drain Check Valves for the Fueling Manifold
Figure 4

BOEING PROPRIETARY - Copyright (C) - Unpublished Work - See title page for details.

(3) A vacuum valve is found in the left main fuel tank. It connects the fueling manifold and the surge tank drain line outboard of rib 17.
   (a) The vacuum valve is a double action check valve. It prevents flow in either direction under certain conditions. Applying high pressure at the valve inlet forces a spring loaded piston, or plug valve, inside the valve against a seat. This closes the vacuum valve. Removing pressure from the valve inlet allows spring pressure to open the vacuum valve. A flapper valve assembly inside the vacuum valve is spring loaded closed. This prevents a reverse flow through the vacuum valve.
(4) Vacuum Valve
   (a) The vacuum valve allows air to enter the fueling manifold from the surge tank drain line after pressure fueling. This allows the manifold to drain. The plug valve closes at 2.5 psi of vacuum, allowing suction defueling without drawing air through the valve.
(5) Drain Check Valve
   (a) The drain check valve allows fuel to drain from the fueling manifold into the auxiliary fuel tank after pressure fueling. The plug valve closes when inlet manifold pressure exceeds outlet pressure by 8.5 psi. This prevents fuel flow through the drain check valve during pressure fueling.
   (b) The maximum permitted leakage with a pressure in the fueling manifold of 55 psi is 500 cc/minute (0.132 gallons/minute) for each valve.

D. Fueling Swing Check Valves (Fig. 5)

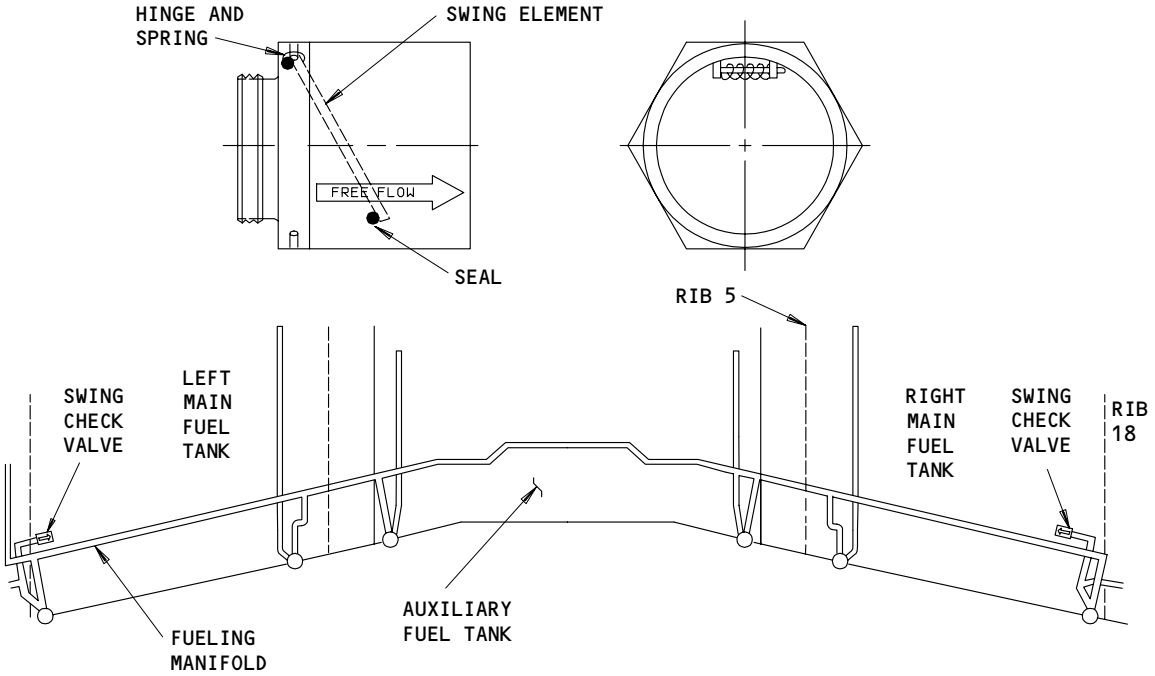

Fueling Swing Check Valves
Figure 5

BOEING PROPRIETARY - Copyright (C) - Unpublished Work - See title page for details.

(1) A swing check valve is installed on the outflow side of the two outboard fueling shutoff valves. The swing check valve attaches to the branch lines of the fueling manifold, inboard of rib 18 in each main fuel tank.

(2) The swing check valves are flapper type valves spring loaded to the closed position. The swing check valves permit 27 gallons per minute of fuel flow at a pressure of 10 inches of water. The swing check valve prevents backflow of fuel into the fueling manifold during suction defueling.

E. Fueling Station (Fig. 6)

(1) The fueling station consists of: two fueling adapters, a fueling control panel, grounding lugs, fueling panel light, interphone jack, and an access door with door operated switch.

(2) The fueling station mounts on the lower left wing leading edge, outboard of rib 18, forward of the front spar.

(3) The fueling station controls fueling and defueling operations. Load select indicators monitor fuel quantity, and system tests are performed at the control panel.

F. Fueling Control Panel (Fig. 7)

(1) The fueling control panel contains all the switches and indicators required for operation of the pressure fueling system.

(2) The fueling control panel mounts between the two fuel adapters at the fueling station. The panel is shock mounted to brackets attached to the front spar. Bonding jumpers prevent buildup of static electricity. Panel mounted components include three load select indicators, a load select control, indicator lights, and switches.

(3) The battery power switch, located in the top right corner of the panel provides the choice of two power sources. In the NORM position, 28 volt dc power comes from the ground handling bus. In the BATT position power comes from the hot battery bus.

(4) The two switches for the defueling valves control the position of the defueling valves. In the guarded position the switch is closed. With the switch in the OPEN position, the defueling valve opens and the blue indicator light comes on. The access door returns the switches to the CLOSE position when the access door is closed.

BOEING PROPRIETARY - Copyright (C) - Unpublished Work - See title page for details.

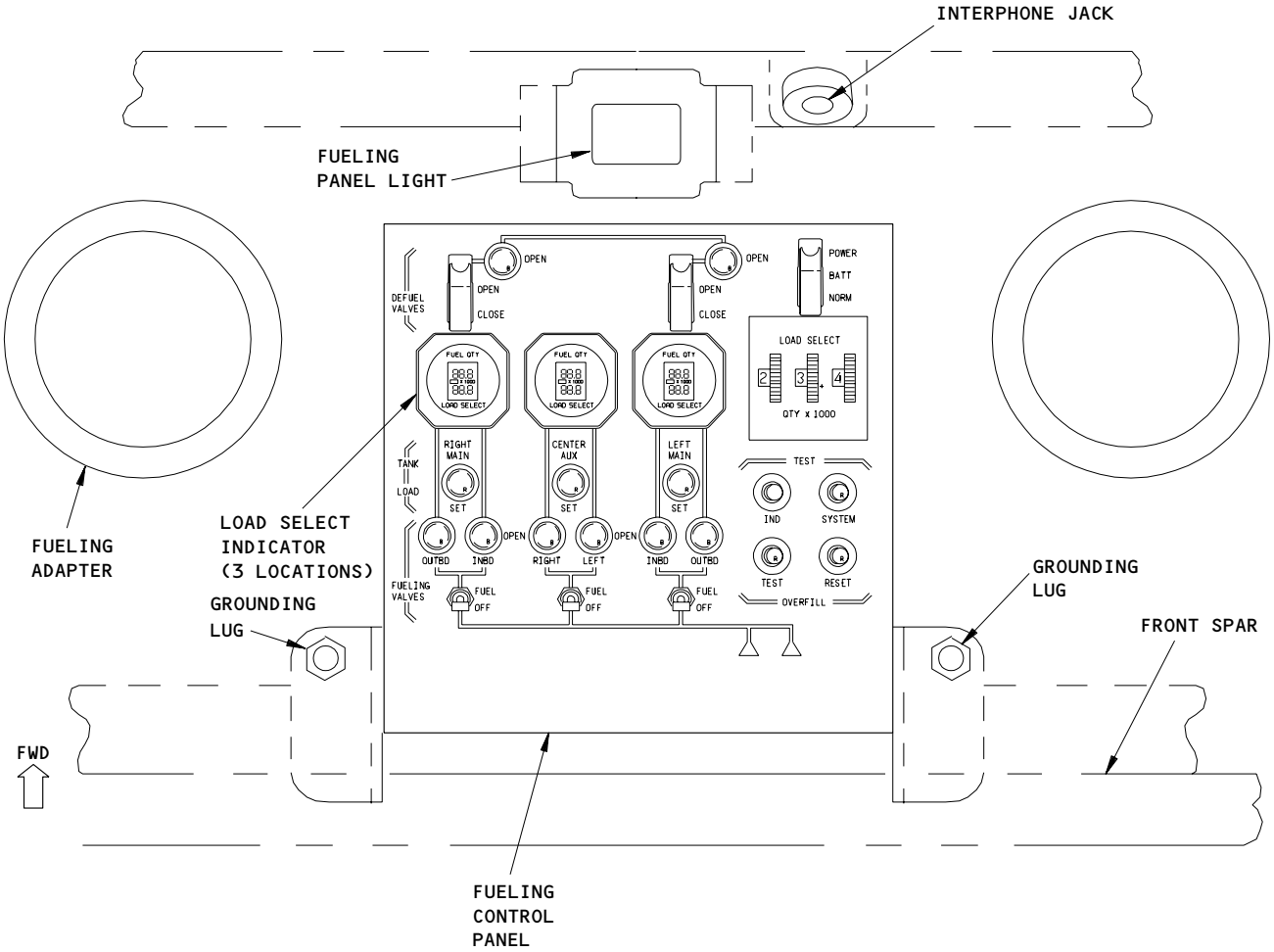

Fueling Station
Figure 6

BOEING PROPRIETARY - Copyright (C) - Unpublished Work - See title page for details.

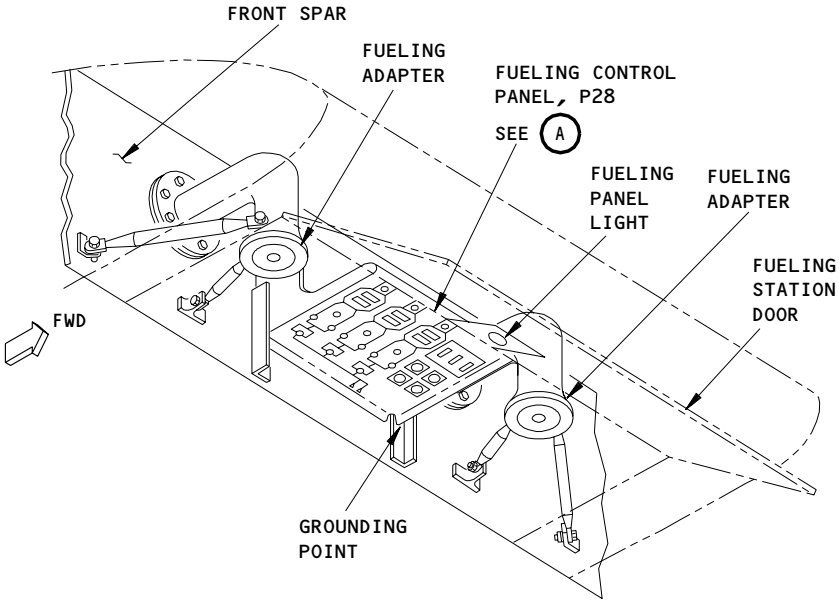

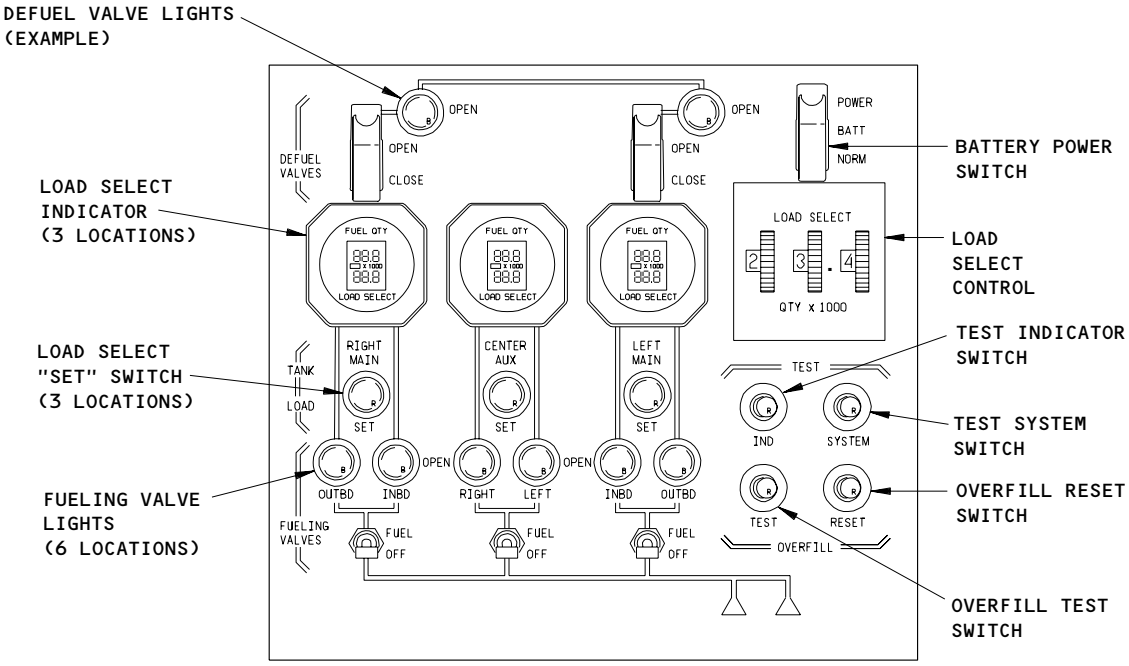

FUELING CONTROL PANEL, P28

A

Fueling Control Panel
Figure 7

BOEING PROPRIETARY - Copyright (C) - Unpublished Work - See title page for details.

(5) Three load select indicators, one for each fuel tank, are installed on the fueling control panel. Each load select indicator has two digital, liquid crystal displays (LCD). The top display shows the quantity of fuel in the fuel tank in LBS (KGS) x 1,000. The bottom display shows the set quantity of fuel. The load select indicators are also part of the fuel quantity indicating system (AMM 28-41-00/001).

(6) The load select control uses a three digit thumbwheel switch to select the fuel load for each tank. The selected fuel load is transferred to the lower digital readout on the load select indicator when the appropriate SET switch, located below the indicator, is pressed. This permits automatic closing of the fueling shutoff valve at the selected load. Pressing the SET switch a second time returns the system to manual operation.

(7) The three switches for the fueling shutoff valves control both fueling shutoff valves for the applicable tank. With the switch in the FUEL position and pressure in the fueling manifold, the valves open and the blue indicator lights come on. With the switch in the OFF position the fueling shutoff valves close. The access door returns the switches to the OFF position when the door closes.

(8) Four pushbutton switches mount on the lower right of the panel.

(a) The TEST IND switch test all load select indicator displays. If the indicators are operational, eights will appear on all displays.

(b) The TEST SYSTEM switch performs a load select functional test and a full tank shutoff test.

(c) The OVERFILL TEST switch checks the overfill sensor system circuit.

(d) The OVERFILL RESET switch allows reset of overfill sensor system.

G. Pressure Relief Valve for the Fueling Manifold (Fig. 7A)

(1) A pressure relief valve for the fueling manifold is installed in the fueling manifold near the right main tank baffle rib 18. This pressure relief valve has a diameter of 1 inch and gives pressure surge protection for the fueling manifold and fueling shutoff valves. The pressure relief valve is spring loaded to keep it closed. It opens at a pressure of 110 +/- 5 psi.

3. Operation (Fig. 8)

A. Functional Description

(1) Fueling

(a) The pressure fueling system operates with 28 volts dc power applied to the fueling shutoff valves and the fuel quantity indicating system (FQIS).

BOEING PROPRIETARY - Copyright (C) - Unpublished Work - See title page for details.

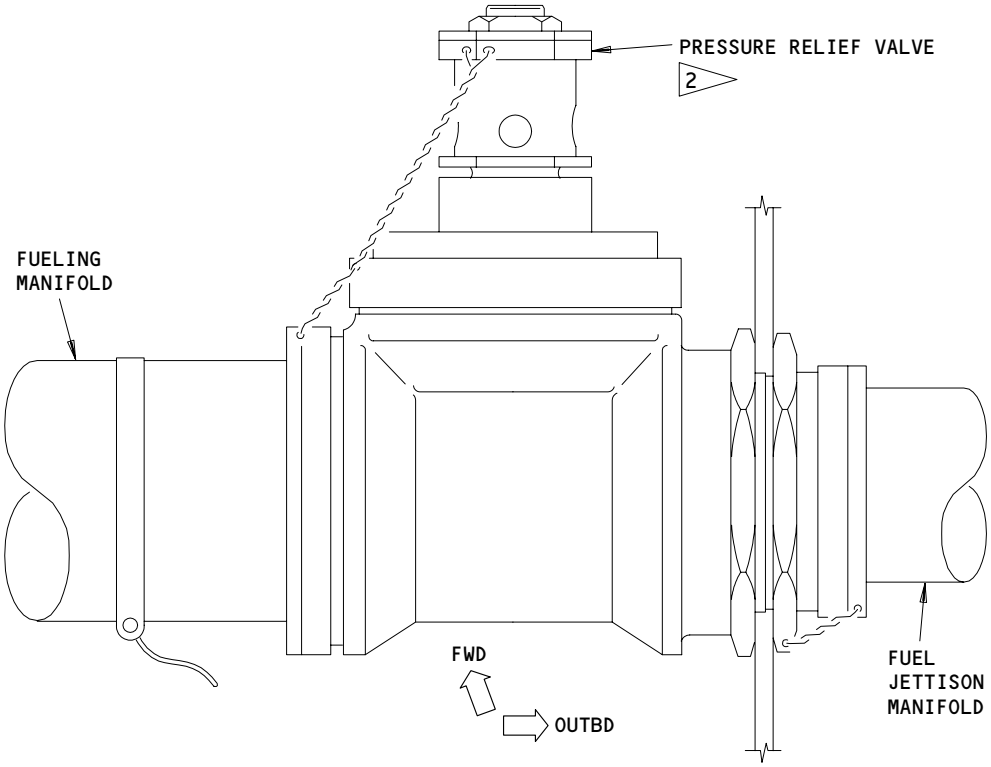

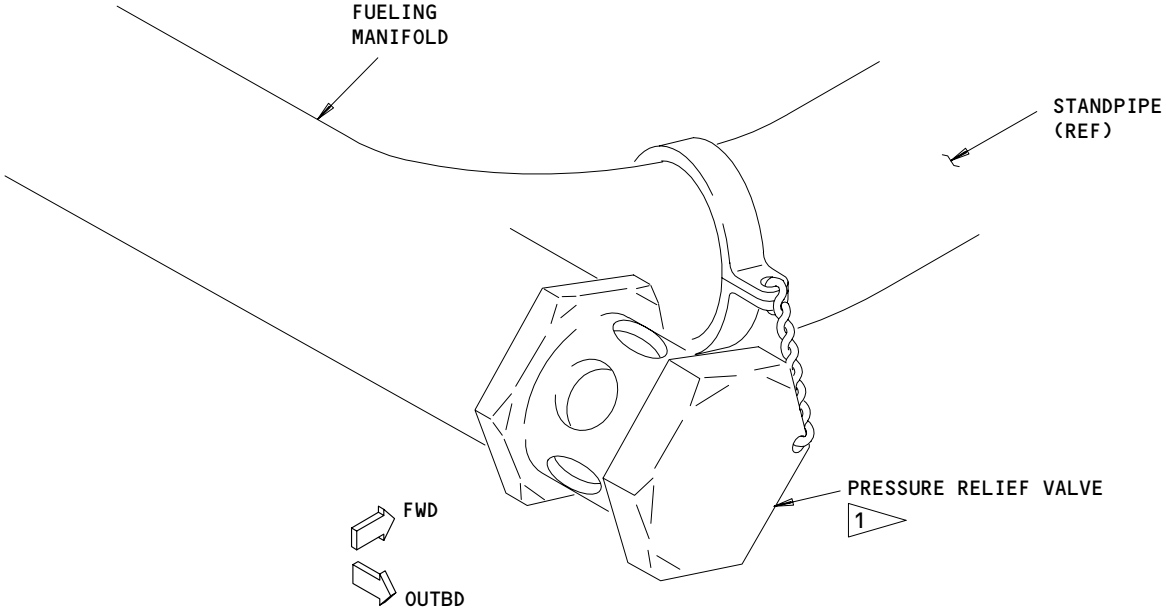

1 SAS 150-154; MTH 275

2 MTH 276-999; SAS 050-149,155-999

Pressure Relief Valve for the Fueling Manifold
Figure 7A

BOEING PROPRIETARY - Copyright (C) - Unpublished Work - See title page for details.

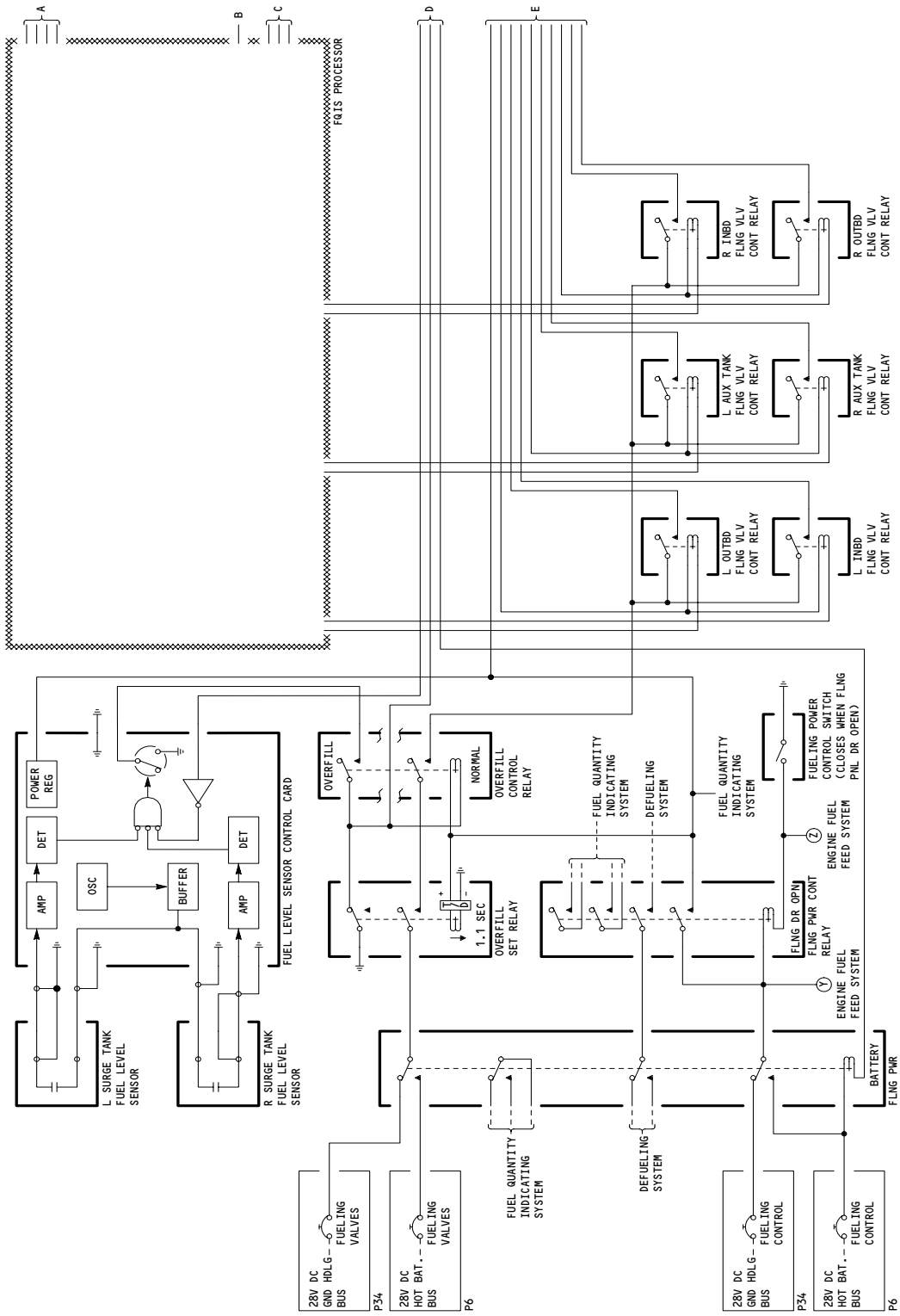

Pressure Fueling System Schematic
Figure 8 (Sheet 1)

BOEING PROPRIETARY - Copyright (C) - Unpublished Work - See title page for details.

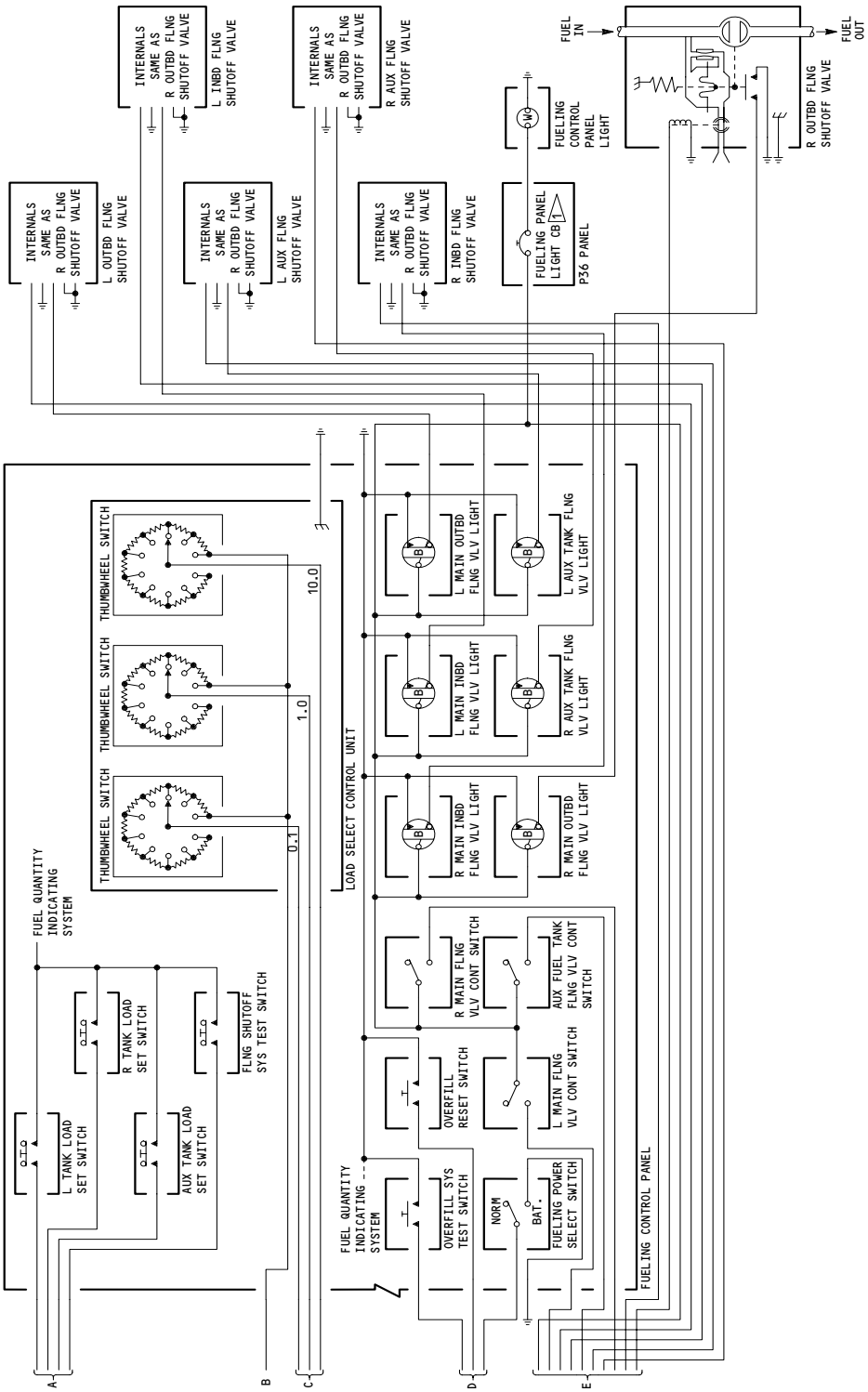

Pressure Fueling System Schematic
Figure 8 (Sheet 2)

IF INSTALLED

BOEING PROPRIETARY - Copyright (C) - Unpublished Work - See title page for details.

(b) Two modes of operation use electrical power, automatic and manual. Modes are changed between manual and automatic by pressing the appropriate SET switch on the fueling control panel. Fueling without electrical power requires manual opening of the fueling shutoff valves and provides no automatic shutdown or overfill protection.

(2) Fueling Modes

(a) Automatic Mode (electric)

1) During the automatic mode the FQIS processor controls the fueling operation by providing an internal ground for the fueling shutoff valve relays. The FQIS processor monitors the amount of fuel in each tank constantly. The FQIS processor stops the fueling operation, by removing the internal ground to the fueling shutoff valve relays, when the tanks are full, have reached the selected fuel quantity, or if an unknown accuracy condition is detected by the FQIS processor.

2) Problems with one or more tank units (or contamination of two or more tank units) in a single tank constitutes an unknown accuracy condition. During this unknown accuracy condition, the fuel quantity display (upper digital readout) for that tank will be blank and the load select display (lower digital readout) will continue to display the selected fuel quantity. The FQIS processor will remove the ground for both of the fueling shutoff valves in the affected tank and fueling of that tank will stop. (If that tank's SET switch is then actuated, the fueling mode will be changed from automatic (electric) to manual (electric) and one fueling shutoff valve will open and remain open until the toggle switch for the fueling shutoff valve is set to OFF or fuel spills into the surge tank and the overfill system shuts fueling off.)

3) In addition, the failure of a single channel of the FQIS processor constitutes an unknown accuracy condition and will result in the removal of the ground for one fueling shutoff valve in each tank, the valve controlled by the failed channel. Thus, fueling would continue using only one fueling shutoff valve in each tank, for those tanks which have two fueling shutoff valves.

4) To commence the fueling procedure, select the amount of fuel required for each tank using the load select control and the SET switches on the fueling control panel. The load select indicators display the amount selected in the lower digital readout. Set the toggle switches for the fueling shutoff valves to the FUEL position.

NOTE: A blank lower display indicates that the system is in the manual mode.

BOEING PROPRIETARY - Copyright (C) - Unpublished Work - See title page for details.

5) The FQIS processor will signal the fueling shutoff valves closed when the tanks are full as soon as an unknown accuracy condition has been detected, as described in 1) above.
6) With the fueling shutoff valves open and the FQIS processor switched on, fuel flows from the fuel truck, through the fueling adapters, to the fueling manifold. The fueling manifold distributes fuel to the tanks through the applicable fueling shutoff valves.
7) The FQIS processor closes the fueling shutoff valves automatically when the preselected quantity of fuel is reached or the tanks are full.
8) To stop automatic fueling at any time during the procedure, on the fueling control panel, return the toggle switch(es) for the fueling shutoff valves to OFF.

(b) Manual Mode (electric)

1) During the manual mode the fueling crew controls the fueling operation. However, at full volume(s) the FQIS processor will provide automatic shutdown. The upper display of the load select indicators displays the fuel in each applicable tank (the lower display will be blank). Three toggle switches, located at the bottom of the fueling control panel, control the fueling shutoff valves. In the OFF position the fueling shutoff valves close. In the FUEL position, the fueling shutoff valves open, and the valve open indicator (blue) lights come on.
2) To start the manual fueling procedure, set the switches for the fueling shutoff valves to the FUEL position. Fuel flows through the open fueling shutoff valves into the fuel tanks. When the load select indicators display the desired amount of fuel, set the switches for the fueling shutoff valves to the OFF position.

   NOTE: The FQIS processor closes the valve(s) automatically when the tanks are full. Overfill protection is available in this manual (electric) mode.

3) A problem with one or more tank units (or contamination of two or more tank units) in a single tank constitutes an unknown accuracy condition. During this unknown accuracy condition, the fuel quantity display (upper digital readout) for that tank will be blank and the FQIS processor will remove the ground for one fueling shutoff valve.
4) The failure of a single channel of the FQIS processor constitutes an unknown accuracy condition and will result in the removal of the ground for one fueling shutoff valve in each tank, the fueling shutoff valve controlled by the bad channel. Thus, fueling would continue using only one fueling shutoff valve in each tank (for those tanks which have two fueling shutoff valves).

BOEING PROPRIETARY - Copyright (C) - Unpublished Work - See title page for details.

(c) Fueling Without Electrical Power (manual)
1) Care must be taken when fueling without 28 volts dc power or with bad electrical components. No automatic shutdown or overfill protection exists.
2) To accomplish fueling, get access to the fueling shutoff valves. Close or open the fueling shutoff valves manually, using the thumbwheel screw on the valve actuator.

NOTE: It is anticipated that this (manual/manual) fueling mode would be used very infrequently. Provided 28 volts dc power is available, this mode is considered to be almost an emergency procedure since at least one valve in each tank can be opened and controlled electrically, even when an unknown accuracy condition exists.

(3) Pressure Surge Protection.
(a) SAS 150-154;
MTH 275;
The pressure relief valve and standpipe installed in the fueling manifold give pressure surge protection. The standpipe, found on the end of the fueling manifold in the right main tank, helps to release pressure surges when the fueling shutoff valves are closed. The pressure relief valve opens if pressure in the fueling manifold is more than 110 ±5 psi. The valve automatically closes when the fueling manifold pressure decreases.
(b) MTH 276-999;
SAS 050-149, 155-999;
Pressure surge protection is given by the pressure relief valve in the fueling manifold. The pressure relief valve opens if the pressure in the fueling manifold is more than 110 ±5 psi. The valve closes automatically when the fueling manifold pressure decreases.
(4) Power to the Solenoids for the Fueling Shutoff Valves
(a) The schematic diagram shows two 28 volt dc power sources: the ground handling bus, and the hot battery bus. To transfer from one power source to the other power source, use the battery power switch, found on the fueling control panel, P28, at the fueling station.
(b) Normally power comes from the ground handling bus. Placing the battery power switch in the BATT position energizes the fueling power relay and power is available from the hot battery bus.
(c) To get access to the fueling power control switch, open the fueling station door. This actuates the fueling power control door switch, energizing the fueling power control relay. The fueling power control relay makes power available to the fueling control panel (P28).

BOEING PROPRIETARY - Copyright (C) - Unpublished Work - See title page for details.

(d) With power available at the fueling control panel (P28), and the fueling valve control switch placed in the FUEL position, current flows through the coil of the right outboard fueling valve relay to ground via the fuel quantity processor. This energizes the fueling shutoff valve relay.

(e) With the outboard fueling shutoff valve energized and the overfill relays energized, power flows from the selected source to the fueling shutoff valve. The blue "valve open" indicator light also comes on (when the valve mechanically opens).

B. Overfill Sensor System

(1) An overfill sensor unit, located in each surge tank, is part of a backup system to prevent fuel spills, should problems occur when fueling the airplane. The sensor consists of two concentric aluminum tubes, which function as a capacitor, with air or fuel as the dielectric.

(2) The fuel level sensor control card mounts in the P50 panel card file. The card contains the electronic circuits that control the overfill sensor system.

(3) The 28 volt dc required to power the system comes from two sources: the ground handling bus and the hot battery bus. If the fueling power transfer relay is energized, power comes from the hot battery bus. If de-energized, power is supplied by the ground handling bus.

(4) Opening the fueling station access door actuates the fueling power control switch. This puts a ground on the fuel power control relay. Power passes through the relay contacts to the fuel level sensor control cards and overfill relays.

(5) Initially the coil of the overfill control relay energizes via overfill set relay contacts to ground. After a time delay, the coil of the overfill set relay energizes and the relay contacts open, breaking the path to ground of the coil of the overfill control relay. The overfill control relay stays energized using an alternative ground, via its own contacts and transister Q1 on the fuel level sensor control card.

(6) While the overfill relays remain energized, the fueling shutoff valves operate as required.

(7) With power applied to the fuel level sensor card, the card sends a signal to the sensor in the surge tank. If the sensor becomes immersed in fuel to the trip level, the AND gate loses an input from the affected tank sensor control card. The Q1 transistor stops conducting and the overfill control relay loses its ground. The overfill control relay becomes de-energized and the fueling shutoff valves close.

(8) Loss of power, loss of sensor signal, or failure of control card causes all fueling shutoff valves to close.

(9) Pushing and holding the OVERFILL RESET button will override a faulty overfill system, retaining the capability of pressure fueling.

C. Control

(1) Check for 28 volt dc power (AMM 24-22-00/001).

BOEING PROPRIETARY - Copyright (C) - Unpublished Work - See title page for details.

(2) Close circuit breakers FUELING CONTROL, FUELING VALVES, and FUEL QTY REFUEL on P34 panel, and P6 panel. Close FUEL QTY 1 and FUEL QTY 2 on P11 panel.
(3) Open the fueling station door and make sure the panel light comes on to show the 28 volt dc power is available.
(4) Connect the grounding cable at fueling station.
(5) Connect the fueling nozzles to one of the two fueling adapters.
(6) Select power source using the battery power switch on the fueling control panel.
(7) Push the TEST IND switch to do a test of the load select indicators.
    (a) 88.8 must show on the upper and lower LCD displays.
(8) Push the indicator light ("press-to-test") for the fueling shutoff valve to make sure it operates correctly.
(9) Do these steps:
    (a) At the load select control, set the thumbwheel switches to the necessary quantity of fuel.
    (b) Push the selected tank SET switch and hold it for a minimum of one second.
    (c) Do this procedure again for each tank.
    (d) If you make an error during the selection process, push the applicable SET switch and do the procedure again.

        NOTE: A blank lower display indicates that the system is in the manual mode.

        1) The FQIS processor will signal the fueling shutoff valves closed when the tanks are full or as soon as an unknown accuracy condition is found.
        2) Problems with one or more tank units in a single tank (or contamination of two or more tank units) or failure of a single processor channel constitutes an unknown accuracy condition. If a single channel problem occurs, the FQIS processor will only remove the ground for one fueling shutoff valve in each tank. Thus fueling would continue using only one fueling shutoff valve in each tank.
(10) Pressurize the pressure fueling system.
(11) Set the switches for the fueling shutoff valve to FUEL. The blue "valve open" indicator lights must come on (when the fueling shutoff valves mechanically open).
(12) The pressure fueling starts. The the FQIS processor monitors the operation. The fueling shutoff valves close automatically if a problem occurs or when the specified quantity of fuel is in the tank.
(13) Put the switches for the fueling shutoff valves back to OFF.
(14) To stop automatic fueling at any time during the procedure, return the switches for the fueling shutoff valves to OFF.
(15) To refuel the airplane in a manual (electric) mode, do not use load select control and make sure the lower display of the indicator is blank.
(16) Set the switches for the fueling shutoff valves to the OPEN position.

BOEING PROPRIETARY - Copyright (C) - Unpublished Work - See title page for details.

(17) Monitor the load select indicators for the quantity of fuel in the fuel tanks. Set the switches for the fueling shutoff valves to OFF to close the fueling shutoff valves.
(18) Put the airplane back to its usual condition.

BOEING PROPRIETARY - Copyright (C) - Unpublished Work - See title page for details.

PRESSURE FUELING SYSTEM

COMPONENT	FIG. 102 SHT	QTY	ACCESS/AREA	AMM REFERENCE
ADAPTER - PRESSURE FUELING	1	2	521QB, FUELING STATION, P28, LEFT WING	28-21-01
CARD - SURGE TANK FUEL LEVEL SENSOR CONTROL, M586	5	1	119AL, MAIN EQUIP CTR, P50	28-21-04
CIRCUIT BREAKER -	5		FLT COMPT, P6,P11	
FUEL QTY 1, C1048		1	11C34	*
FUEL QTY 2, C1053		1	11M19	*
FUELING CONTROL, C1043		1	6E5	*
FUELING VALVES, C1046		1	6E6	*
CIRCUIT BREAKER -	5		119AL, MAIN EQUIP CTR, P34	
FLNG CONT, C1041		1	34L3	*
FLNG VALVES, C1047		1	34L5	*
FUEL QTY REFUEL, C1040		1	34L2	*
CIRCUIT BREAKER -	5		119AL, MAIN EQUIP CTR, P36	
FUELING PANEL, C94		1	36D2 OR 36E6	*
CONTROL - LOAD SELECT, M638	1	1	521QB, FUELING STATION, P28, LEFT WING	28-41-07
LIGHT - CENTER AUX LEFT FUELING VALVES, L174	1	1	521QB, FUELING STATION, P28, LEFT WING	*
LIGHT - CENTER AUX RIGHT FUELING VALVES, L175	1	1	521QB, FUELING STATION, P28, LEFT WING	*
LIGHT - FUELING PANEL, L62	1	1	521QB, FUELING STATION, P28, LEFT WING	*
LIGHT - LEFT MAIN INBD FUELING VALVES, L64	1	1	521QB, FUELING STATION, P28, LEFT WING	*
LIGHT - LEFT MAIN OUTBD FUELING VALVES, L63	1	1	521QB, FUELING STATION, P28, LEFT WING	*
LIGHT - RIGHT MAIN INBD FUELING VALVES, L65	1	1	521QB, FUELING STATION, P28, LEFT WING	*
LIGHT - RIGHT MAIN OUTBD FUELING VALVES, L66	1	1	521QB, FUELING STATION, P28, LEFT WING	*
LUG - GROUNDING	1	2	521QB, FUELING STATION, P28, LEFT WING	28-21-00
RELAY - (FIM 31-01-36/101)				
FUEL OVERFILL CONTROL, K181				
FUEL OVERFILL SET, K180				
FUELING POWER CONTROL, K179				
FUELING POWER TRANSFER, K357				
FUELING VALVE CONTROL L AUX, K45				
FUELING VALVE CONTROL L INBD, K184				
FUELING VALVE CONTROL L OUTBD, K183				
FUELING VALVE CONTROL R AUX, K46				
FUELING VALVE CONTROL R INBD, K185				
FUELING VALVE CONTROL R OUTBD, K186				
SENSOR - LEFT SURGE TANK FUEL LEVEL, TS195	2	1	542AB, SURGE TANK, LEFT WING	28-21-03
SENSOR - RIGHT SURGE TANK FUEL LEVEL, TS196	2	1	642AB, SURGE TANK, RIGHT WING	28-21-03

* SEE THE WDM EQUIPMENT LIST

Pressure Fueling System - Component Index
Figure 101 (Sheet 1)

BOEING PROPRIETARY - Copyright (C) - Unpublished Work - See title page for details.

COMPONENT	FIG. 102 SHT	QTY	ACCESS/AREA	REFERENCE
SWITCH - CENTER AUX FUELING VALVES, S417	1	1	521QB, FUELING STATION, P28, LEFT WING	*
SWITCH - CENTER AUX TANK LOAD SET, S420	1	1	521QB, FUELING STATION, P28, LEFT WING	*
SWITCH - BATTERY POWER, S345	1	1	521QB, FUELING STATION, P28, LEFT WING	*
SWITCH - FUELING POWER CONTROL, S346	1	1	521QB, FUELING STATION, P28, LEFT WING	28-21-09
SWITCH - LEFT MAIN FUELING VALVES, S348	1	1	521QB, FUELING STATION, P28, LEFT WING	*
SWITCH - LEFT MAIN TANK LOAD SET, S418	1	1	521QB, FUELING STATION, P28, LEFT WING	*
SWITCH - OVERFILL RESET, S347	1	1	521QB, FUELING STATION, P28, LEFT WING	*
SWITCH - OVERFILL TEST, S416	1	1	521QB, FUELING STATION, P28, LEFT WING	*
SWITCH - RIGHT MAIN FUELING VALVES, S349	1	1	521QB, FUELING STATION, P28, LEFT WING	*
SWITCH - RIGHT MAIN TANK LOAD SET, S419	1	1	521QB, FUELING STATION, P28, LEFT WING	*
SWITCH - TEST INDICATOR, S457	1	1	521QB, FUELING STATION, P28, LEFT WING	*
SWITCH - TEST SYSTEM, S421	1	1	521QB, FUELING STATION, P28, LEFT WING	*
UNIT - L AUX FUELING SHUTOFF VALVE CONTROL, V121	2	1	LEFT WHEEL WELL, REAR SPAR	28-21-12
UNIT - L INBD FUELING SHUTOFF VALVE CONTROL, V21	2	1	551TB, REAR SPAR, LEFT WING	28-21-12
UNIT - L OUTBD FUELING SHUTOFF VALVE CONTROL, V20	2	1	561GB, REAR SPAR, LEFT WING	28-21-12
UNIT - R AUX FUELING SHUTOFF VALVE CONTROL, V122	2	1	RIGHT WHEEL WELL, REAR SPAR	28-21-12
UNIT - R INBD FUELING SHUTOFF VALVE CONTROL, V22	2	1	651TB, REAR SPAR, RIGHT WING	28-21-12
UNIT - R OUTBD FUELING SHUTOFF VALVE CONTROL, V23	2	1	661GB, REAR SPAR, RIGHT WING	28-21-12
VALVE - FUELING MANIFOLD DRAIN CHECK	3	2	531BB,631BB, LEFT WING, RIGHT WING	28-21-05
VALVE - FUELING MANIFOLD VACUUM	3	1	541HB, LEFT WING	28-21-05
VALVE - L AUX FUELING SHUTOFF, V121	2	1	531BB, LEFT WING	28-21-02
VALVE - L INBD FUELING SHUTOFF, V21	2	1	532BB, LEFT WING	28-21-02
VALVE - L OUTBD FUELING SHUTOFF, V20	2	1	541HB, LEFT WING	28-21-02
VALVE - R AUX FUELING SHUTOFF, V122	2	1	631BB, RIGHT WING	28-21-02
VALVE - R INBD FUELING SHUTOFF, V22	2	1	632BB, RIGHT WING	28-21-02
VALVE - R OUTBD FUELING SHUTOFF, V23	2	1	641HB, RIGHT WING	28-21-02
VALVE - SWING CHECK	3	2	541HB,641HB	28-21-06

* SEE THE WDM EQUIPMENT LIST

Pressure Fueling System - Component Index
Figure 101 (Sheet 2)

BOEING PROPRIETARY - Copyright (C) - Unpublished Work - See title page for details.

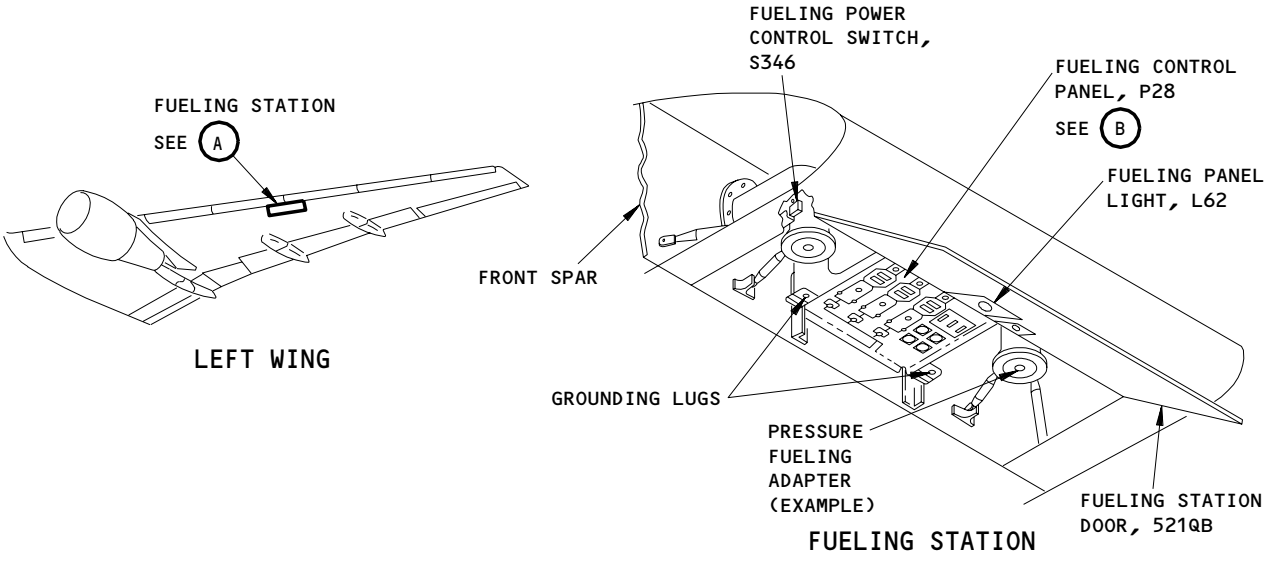

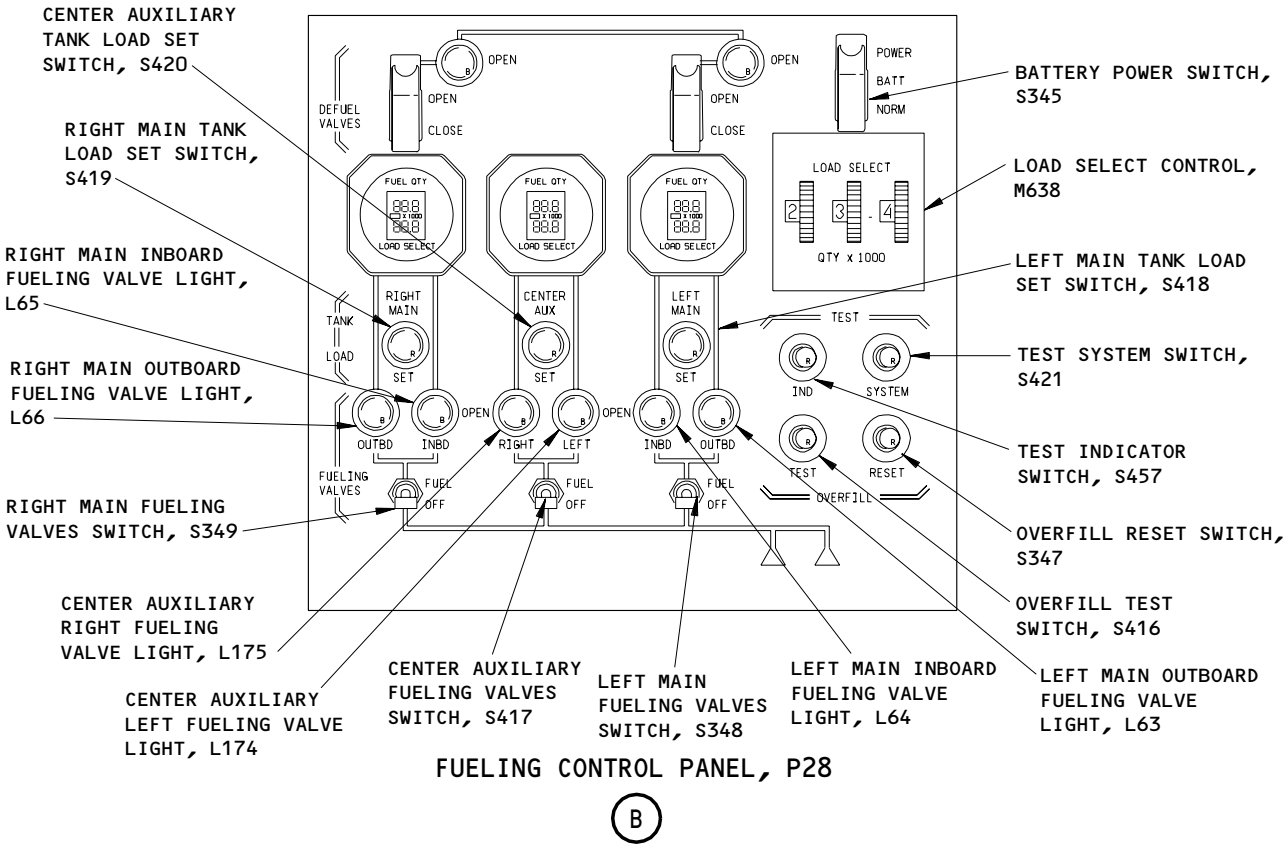

FUELING CONTROL PANEL, P28

B

Pressure Fueling System - Component Location
Figure 102 (Sheet 1)

BOEING PROPRIETARY - Copyright (C) - Unpublished Work - See title page for details.

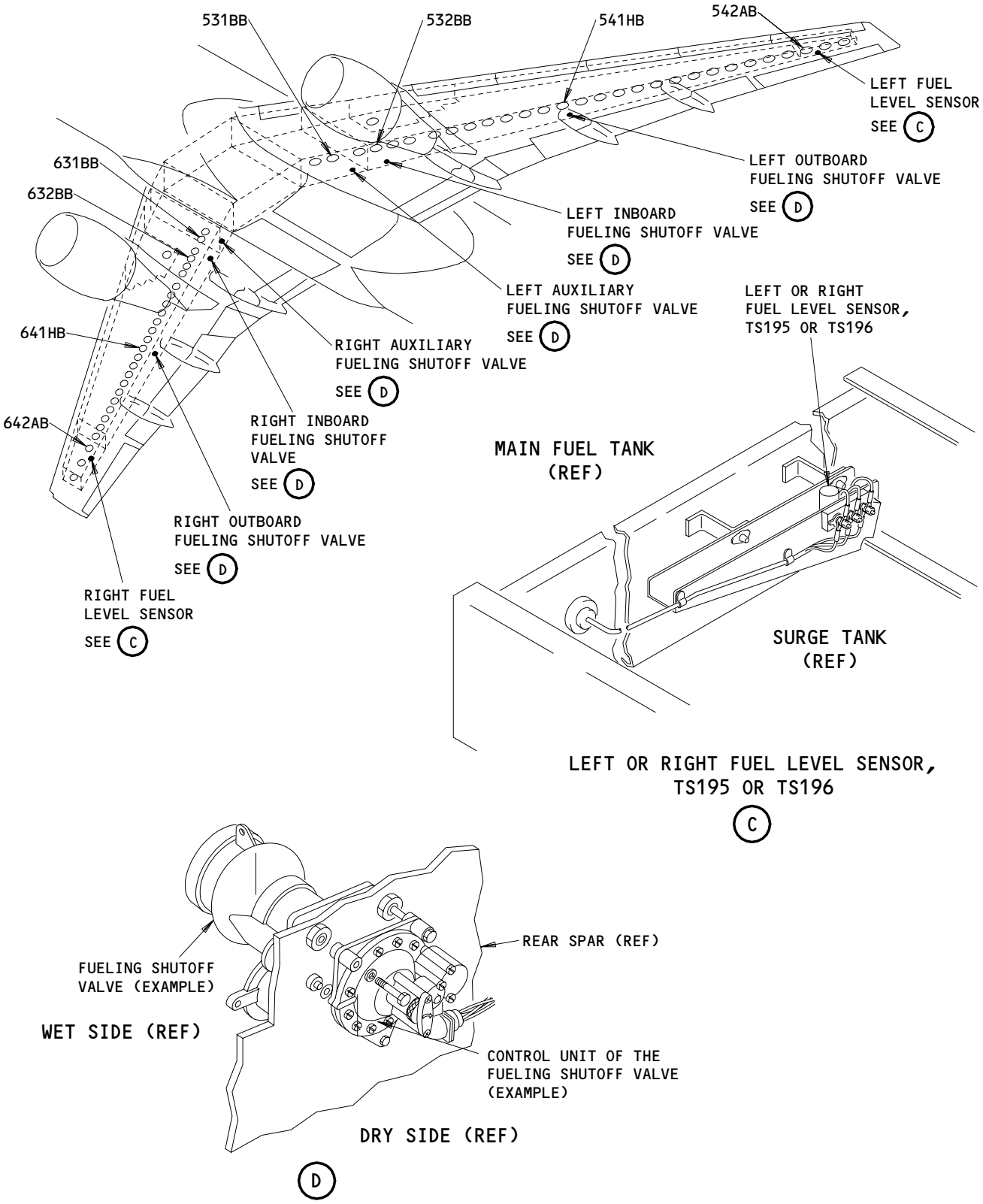

Pressure Fueling System - Component Location
Figure 102 (Sheet 2)

BOEING PROPRIETARY - Copyright (C) - Unpublished Work - See title page for details.

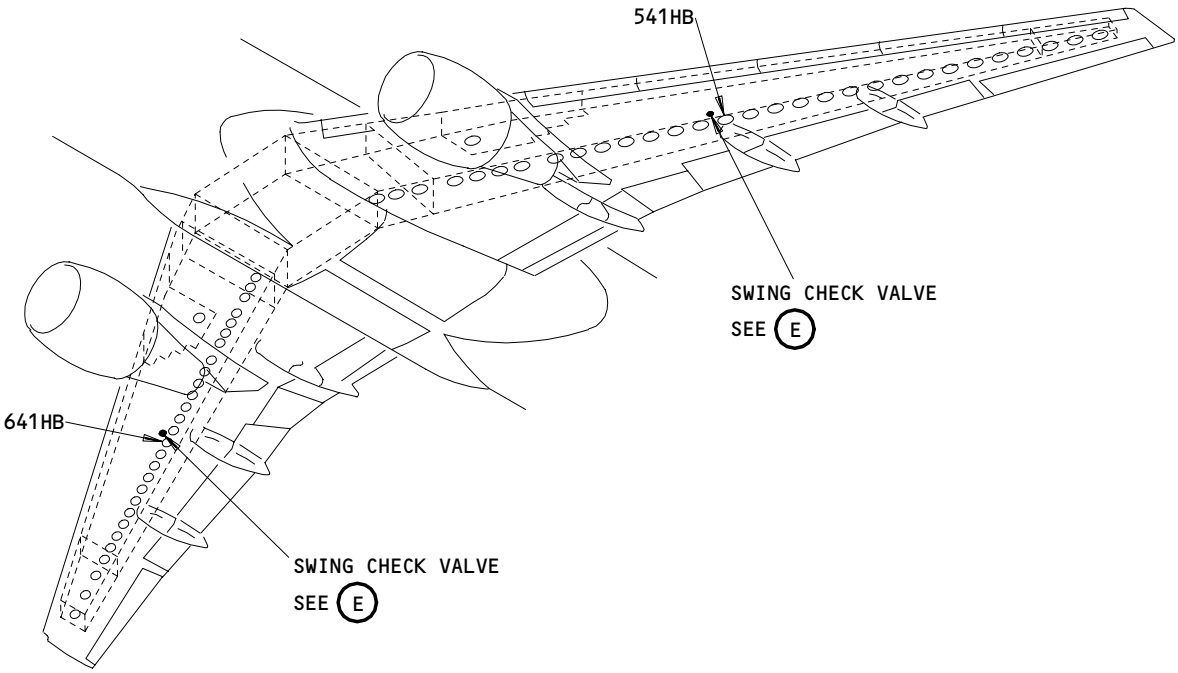

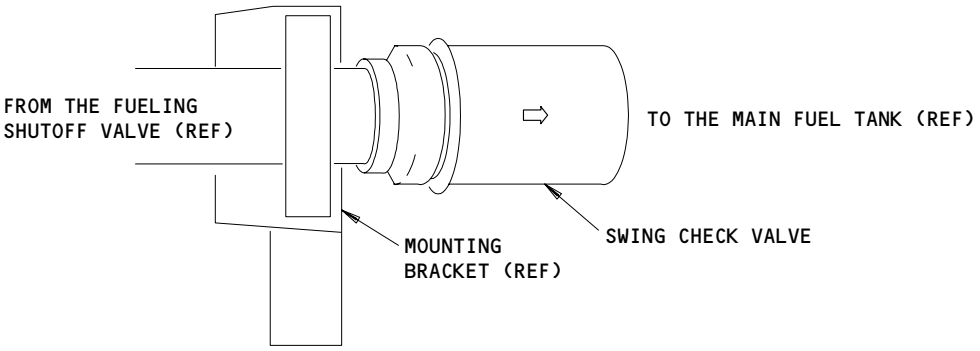

SWING CHECK VALVE

E

Pressure Fueling System - Component Location
Figure 102 (Sheet 3)

BOEING PROPRIETARY - Copyright (C) - Unpublished Work - See title page for details.

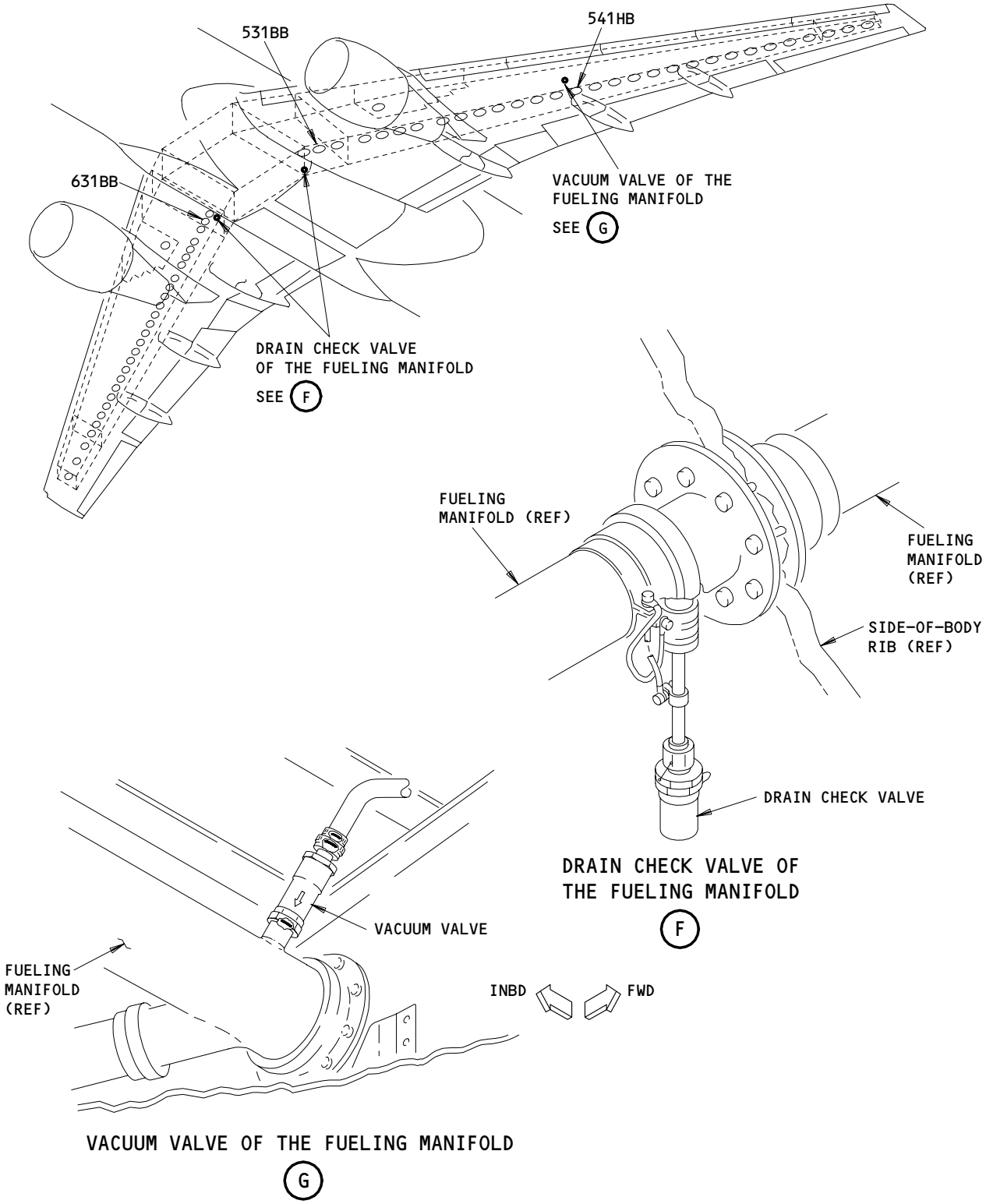

Pressure Fueling System - Component Location
Figure 102 (Sheet 4)

BOEING PROPRIETARY - Copyright (C) - Unpublished Work - See title page for details.

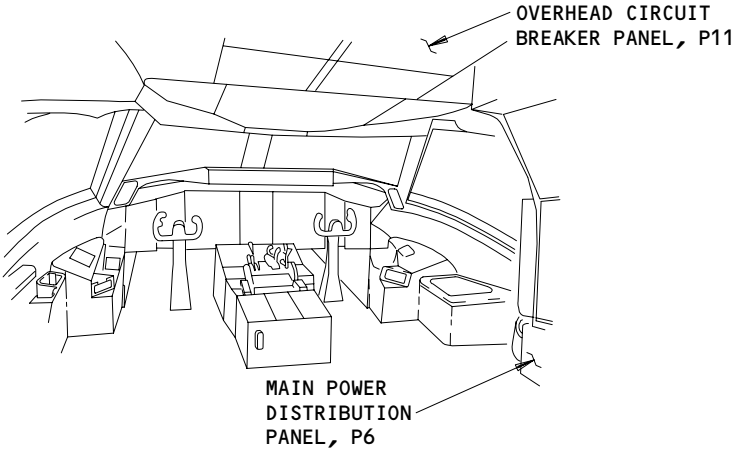

FLIGHT COMPARTMENT

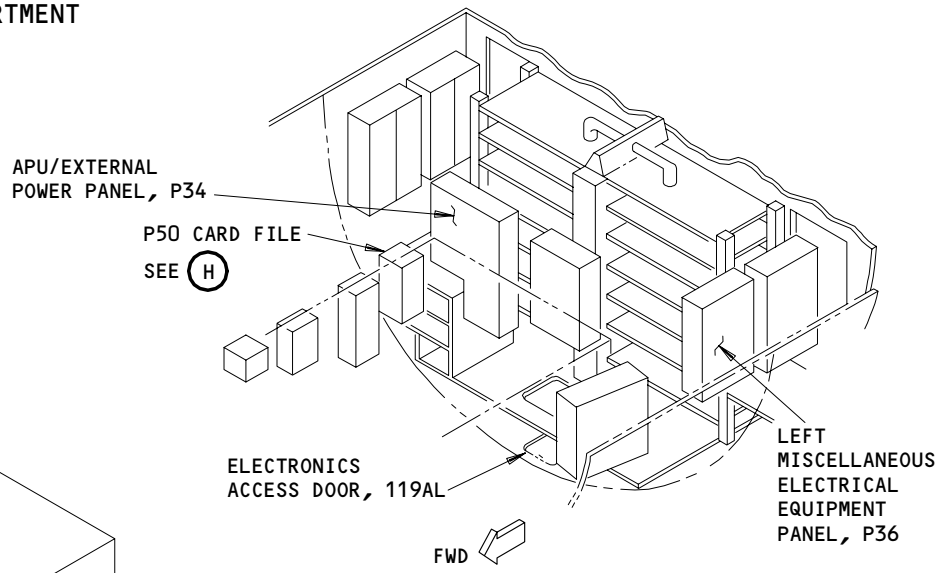

MAIN EQUIPMENT CENTER

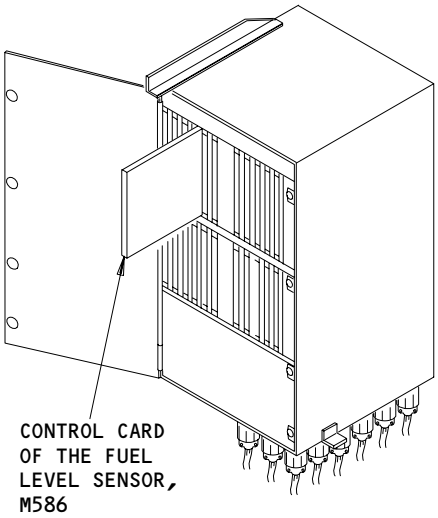

P50 CARD FILE

H

Pressure Fueling System - Component Location
Figure 102 (Sheet 5)

BOEING PROPRIETARY - Copyright (C) - Unpublished Work - See title page for details.

PRESSURE FUELING SYSTEM - ADJUSTMENT/TEST

1. General
   A. This procedure contains the system test for the pressure fueling system.
   B. The system test makes sure that the fueling shutoff valves open when electrical power and fuel pressure are applied; and that the fueling shutoff valves close when the fuel tanks are full or at the set fuel quantity.
   C. Do the steps in sequence.

TASK 28-21-00-735-001

2. System Test - Pressure Fueling System (Fig. 501)
   A. Equipment
      (1) FOR AIRPLANES WITH 43 PIN CONNECTOR (P36,CONNECTOR D4942P) USE:

          Test Box - Fuel Level Sensors Surge Tank - A28006-1
      (2) FOR AIRPLANES WITH 61 PIN CONNECTOR (P36,CONNECTOR D4942P) USE:

          Test Box - Fuel Level Sensors Surge Tank - A28006-22
   B. References
      (1) AMM 06-44-00/201, Wings, Access Doors and Panels
      (2) AMM 12-11-01/301, Fuel Tank Pressure Fueling
      (3) AMM 20-41-00/201, Static Grounding
      (4) AMM 24-22-00/201, Electric Power Control
      (5) AMM 27-51-00/201, Trailing Edge Flap System
      (6) AMM 27-61-00/201, Spoiler/Speedbrake Control System
      (7) AMM 27-81-00/201, Leading Edge Slat System
      (8) AMM 28-26-00/201, Defueling
   C. Access
      (1) Location Zone
          211 Control Cabin (Left)
          212 Control Cabin (Right)
          521 Leading Edge to Front Spar (Left)

      (2) Access Panel
          521QB Fueling Station Door (Left)

   D. Prepare for Test

          S 865-165
      (1) Supply electrical power (AMM 24-22-00/201).

          S 865-232
      (2) Do the deactivation procedure for the trailing edge flaps (AMM 27-51-00/201).

BOEING PROPRIETARY - Copyright (C) - Unpublished Work - See title page for details.

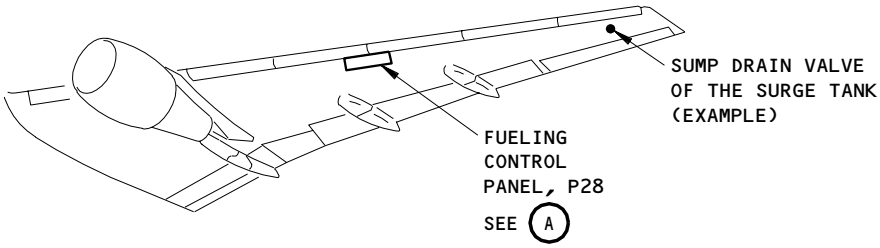

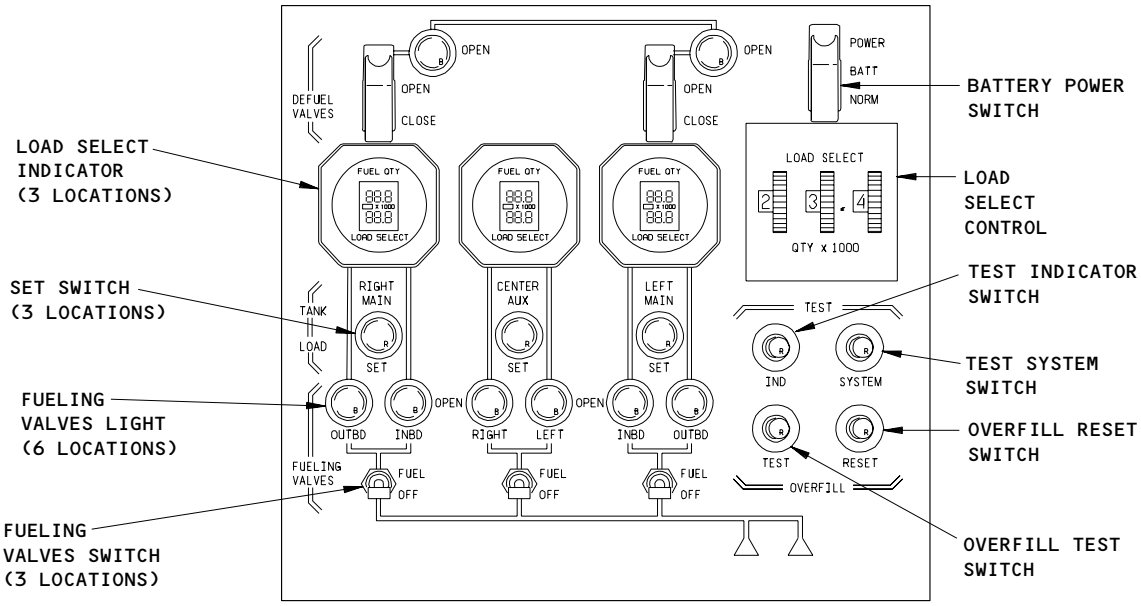

FUELING CONTROL PANEL, P28

A

Pressure Fueling System Test
Figure 501

BOEING PROPRIETARY - Copyright (C) - Unpublished Work - See title page for details.

S 865-014

WARNING: DO THE DEACTIVATION PROCEDURE FOR THE LEADING EDGE SLATS. FAILURE TO DO THE DEACTIVATION PROCEDURE FOR THE LEADING EDGE SLATS COULD CAUSE INJURY TO PERSONS OR DAMAGE TO EQUIPMENT.

(3) Do the deactivation procedure for the leading edge slats (AMM 27-81-00/201).

S 495-231

WARNING: MAKE SURE THE AIRPLANE AND THE FUELING SOURCE ARE ELECTRICALLY BONDED BEFORE YOU DO THE FUELING PROCEDURE OR THE DEFUELING PROCEDURE. MAKE SURE THE AIRPLANE AND ALL WORK STANDS IN USE ARE GROUNDED AND BONDED BEFORE YOU DO MAINTENANCE ON THE FUEL TANK OR FUEL SYSTEM. REFER TO THE PARAGRAPHS ON STATIC GROUNDING PROCEDURE. CORRECT ELECTROSTATIC GROUNDING AND BONDING PREVENTS STATIC ELECTRICITY DISCHARGES AND POSSIBLE FIRE OR EXPLOSION.

(4) Make sure the airplane is grounded correctly (AMM 20-41-00/201).

S 495-229

(5) Connect a grounding cable from the fueling source and other fuel equipment being used for tank maintenance to an approved and identified static ground.

S 495-230

(6) Connect a bonding cable from the fueling vehicle to an approved electrical grounding or bonding connection on the airplane.

NOTE: If the fueling vehicle has a permanently attached V or Y grounding cable, connect one part of the V or Y to an approved identified ground. Then connect the other part of the V or Y cable to an approved electrical bonding or grounding point on the airplane.

S 015-002

(7) Open the fueling station door, 521QB (AMM 06-44-00/201).

S 215-005

(8) Make sure these circuit breakers on the main power distribution panel, P6, are closed:
(a) 6E5, FUELING CONTROL
(b) 6E6, FUELING VALVES

BOEING PROPRIETARY - Copyright (C) - Unpublished Work - See title page for details.

S 215-006
(9) Make sure these circuit breakers on the overhead circuit breaker panel, P11, are closed:
(a) 11C34, FUEL QTY 1
(b) 11M19, FUEL QTY 2

S 215-007
(10) Make sure these circuit breakers on the APU external power panel, P34, are closed:
(a) 34L2, FUEL QTY REFUEL
(b) 34L5, FLNG VALVES

S 215-008
(11) Make sure the six EICAS circuit breakers on the P11 panel are closed.

S 865-010
(12) Put the BATT POWER switch on the fueling control panel, P28, to the NORM position.

S 655-015
(13) Defuel the main fuel tanks completely (AMM 28-26-00/201).

S 655-096
(14) Defuel the auxiliary fuel tank completely (AMM 28-26-00/201).

S 215-016
(15) Make sure the FUEL CONFIG light on the overhead panel, P5, is off.

S 215-097
(16) Make sure the EICAS message, LOW FUEL, shows on the top display.

S 655-017
(17) Connect the fueling nozzles to the fueling adapters (AMM 12-11-01/301).

E. Test of the Right Main Fuel Tank

S 865-170
(1) Set the LOAD SELECT control on the fueling control panel to a fuel quantity of 20000 pounds (9100 kilograms).

NOTE: Set the LOAD SELECT to "20.0" for an airplane that measures fuel quantity in pounds. Set the LOAD SELECT to "9.1" for an airplane that measures fuel quantity in kilograms. The numerals on the LOAD SELECT control and display are multiplied by 1000 to get the fuel quantity.

BOEING PROPRIETARY - Copyright (C) - Unpublished Work - See title page for details.

S 865-020
(2) Push the RIGHT MAIN SET switch.

S 215-172
(3) Make sure the lower display of the RIGHT MAIN LOAD SELECT indicator shows a fuel quantity of 20000 pounds (9100 kilograms).

NOTE: The RIGHT MAIN LOAD SELECT indicator shows "20.0" for an airplane that measures fuel quantity in pounds. The RIGHT MAIN LOAD SELECT shows "9.1" for an airplane that measures fuel quantity in kilograms.

S 865-021
(4) Put the RIGHT MAIN FUELING VALVES switch to the FUEL position.

S 215-100
(5) After fueling starts, make sure the RIGHT MAIN INBD and OUTBD FUELING VALVES lights come on.

S 865-022
(6) Push the TEST SYSTEM switch for 1 second and release.

S 655-101
(7) Make sure the fuel flow stops.

NOTE: Fueling will automatically start approximately 10 seconds after you push the TEST SYSTEM switch.

S 215-102
(8) Make sure the RIGHT MAIN INBD and INBD FUELING VALVES lights go off.

S 655-103
(9) Continue fueling until the load select fuel shutoff occurs.

S 215-173
(10) Make sure the fuel quantity shown on the RIGHT MAIN LOAD SELECT indicator is between 19800 and 22000 pounds (9000 and 9200 kilograms)

NOTE: The numerals shown on the display are multiplied by 1000 to get the fuel quantity.

S 215-025
(11) Make sure the FUEL CONFIG light on the P5 panel comes on.

S 215-104
(12) Make sure the EICAS message, LOW FUEL, shows on the top display.

BOEING PROPRIETARY - Copyright (C) - Unpublished Work - See title page for details.

S 865-105
(13) Move the COMPUTER switch on the EICAS DISPLAY select panel to the L position.

S 215-106
(14) Make sure the EICAS message, LOW FUEL, shows on the top display.

S 865-107
(15) Move the COMPUTER switch on the EICAS DISPLAY select panel to the R position.

S 215-108
(16) Make sure the EICAS message, LOW FUEL, shows on the top display.

S 865-026
(17) Put the RIGHT MAIN FUELING VALVES switch to the OFF position.

F. Test of the Left Main Fuel Tank

S 865-266
(1) Set the LOAD SELECT control on the fueling control panel to a fuel quantity of 20000 pounds (9100 kilograms).

NOTE: Set the LOAD SELECT to "20.0" for an airplane that measures fuel quantity in pounds. Set the LOAD SELECT to "9.1" for an airplane that measures fuel quantity in kilograms. The numerals on the LOAD SELECT control and display are multiplied by 1000 to get the fuel quantity.

S 865-029
(2) Push the LEFT MAIN SET switch.

S 215-267
(3) Make sure the lower display of the LEFT MAIN LOAD SELECT indicator shows a fuel quantity of 20000 pounds (9100 kilograms).

NOTE: The LEFT MAIN LOAD SELECT indicator shows "20.0" for an airplane that measures fuel quantity in pounds. The LEFT MAIN LOAD SELECT shows "9.1" for an airplane that measures fuel quantity in kilograms.

S 865-030
(4) Put the LEFT MAIN FUELING VALVES switch to the FUEL position.

S 215-111
(5) After fueling starts, make sure the LEFT MAIN INBD and OUTBD FUELING VALVES lights come on.

BOEING PROPRIETARY - Copyright (C) - Unpublished Work - See title page for details.

S 865-031
(6) Push the TEST SYSTEM switch for 1 second and release.

S 655-112
(7) Make sure the fuel flow stops.

NOTE: Fueling will automatically start approximately 10 seconds after you push the TEST SYSTEM switch.

S 215-113
(8) Make sure the LEFT MAIN INBD and OUTBD FUELING VALVES lights go off.

S 655-114
(9) Continue fueling until the load select fuel shutoff occurs.

S 215-268
(10) Make sure the fuel quantity shown on the LEFT MAIN LOAD SELECT indicator is between 19800 and 22000 pounds (9000 and 9200 kilograms)

NOTE: The numerals shown on the display are multiplied by 1000 to get the fuel quantity.

S 215-034
(11) Make sure the FUEL CONFIG light on the P5 panel goes off.

S 215-115
(12) Make sure the EICAS message, LOW FUEL, does not show on the top display.

S 865-116
(13) Put the LEFT MAIN FUELING VALVES switch to the OFF position.

G. Test of the Auxiliary Fuel Tank

S 865-176
(1) Set the LOAD SELECT control on the fueling control panel to a fuel quantity of 28000 pounds (12700 kilograms).

NOTE: Set the LOAD SELECT to "28.0" for an airplane that measures fuel quantity in pounds. Set the LOAD SELECT to "12.7" for an airplane that measures fuel quantity in kilograms. The numerals on the LOAD SELECT control and display are multiplied by 1000 to get the fuel quantity.

S 865-043
(2) Push the CENTER AUX SET switch.

BOEING PROPRIETARY - Copyright (C) - Unpublished Work - See title page for details.

S 215-117
(3) Make sure the set quantity shows on the lower display of the LOAD SELECT Indicator.

S 865-044
(4) Put the CENTER AUX FUELING VALVES switch to the FUEL position.

S 215-118
(5) After fueling starts, make sure the CENTER AUX LEFT and RIGHT FUELING VALVES lights come on.

S 865-045
(6) Push the TEST SYSTEM switch for 1 second and release.

S 655-119
(7) Make sure the fuel flow stops.

NOTE: Fueling will automatically start approximately 10 seconds after you push the TEST SYSTEM switch.

S 215-120
(8) Make sure the CENTER AUX LEFT and RIGHT FUELING VALVES lights go off.

S 655-121
(9) Continue fueling until the load select fuel shutoff occurs.

S 215-177
(10) Make sure the fuel quantity shown on the CENTER AUX LOAD SELECT indicator is between 27700 and 28200 pounds (12600 and 12800 kilograms)

NOTE: The numerals shown on the display are multiplied by 1000 to get the fuel quantity.

S 215-052
(11) Make sure the FUEL CONFIG light on the P5 panel comes on.

S 215-122
(12) Make sure the EICAS message, FUEL CONFIG, shows on the top display.

S 865-054
(13) Put the CENTER AUX FUELING VALVES switch to the OFF position.

BOEING PROPRIETARY - Copyright (C) - Unpublished Work - See title page for details.

H. Overfill Test

S 865-291

CAUTION: PUT CONTAINERS AT THE VENT SCOOP IN EACH SURGE TANK TO CATCH FUEL WHEN THE OVERFILL SYSTEM IS INOPERABLE. FUEL LEAKAGE COULD CAUSE DAMAGE TO EQUIPMENT.

(1) Set the LOAD SELECT control on the fueling control panel to a fuel quantity of 30000 pounds (13600 kilograms).

NOTE: Set the LOAD SELECT to "30.0" for an airplane that measures fuel quantity in pounds. Set the LOAD SELECT to "13.6" for an airplane that measures fuel quantity in kilograms. The numerals on the LOAD SELECT control and display are multiplied by 1000 to get the fuel quantity.

S 865-057
(2) Push the RIGHT MAIN SET switch.

S 215-180
(3) Make sure the lower display of the RIGHT MAIN LOAD SELECT indicator shows a fuel quantity of 30000 pounds (13600 kilograms).

NOTE: The RIGHT MAIN LOAD SELECT indicator shows "30.0" for an airplane that measures fuel quantity in pounds. The RIGHT MAIN LOAD SELECT shows "13.6" for an airplane that measures fuel quantity in kilograms.

S 865-058
(4) Put the RIGHT MAIN FUELING VALVES switch to the FUEL position.

S 865-059
(5) Push the OVERFILL TEST switch.

S 655-125
(6) Make sure the fuel flow stops.

S 215-126
(7) Make sure the RIGHT MAIN INBD and OUTBD FUELING VALVES lights go off.

S 865-060
(8) Push the OVERFILL RESET switch.

BOEING PROPRIETARY - Copyright (C) - Unpublished Work - See title page for details.

S 215-127
(9) Make sure the RIGHT MAIN INBD and OUTBD FUELING VALVES lights come on.

S 655-061
(10) Continue fueling until the load select fuel shutoff occurs.

S 865-062
(11) Put the RIGHT MAIN FUELING VALVES switch to the OFF position.

S 865-269
(12) Set the LOAD SELECT control on the fueling control panel to a fuel quantity of 30000 pounds (13600 kilograms).

NOTE: Set the LOAD SELECT to "30.0" for an airplane that measures fuel quantity in pounds. Set the LOAD SELECT to "13.6" for an airplane that measures fuel quantity in kilograms. The numerals on the LOAD SELECT control and display are multiplied by 1000 to get the fuel quantity.

S 865-130
(13) Push the LEFT MAIN SET switch.

S 215-270
(14) Make sure the lower display of the LEFT MAIN LOAD SELECT indicator shows a fuel quantity of 30000 pounds (13600 kilograms).

NOTE: The LEFT MAIN LOAD SELECT indicator shows "30.0" for an airplane that measures fuel quantity in pounds. The LEFT MAIN LOAD SELECT shows "13.6" for an airplane that measures fuel quantity in kilograms.

S 865-131
(15) Put the LEFT MAIN FUELING VALVES switch to the FUEL position.

S 865-132
(16) Push the OVERFILL TEST switch.

S 655-133
(17) Make sure the fuel flow stops.

S 215-134
(18) Make sure the LEFT MAIN INBD and OUTBD FUELING VALVES lights go off.

S 865-135
(19) Push the OVERFILL RESET switch.

BOEING PROPRIETARY - Copyright (C) - Unpublished Work - See title page for details.

S 215-136
(20) Make sure the LEFT MAIN INBD and OUTBD FUELING VALVES lights come on.

S 655-137
(21) Continue fueling until the load select fuel shutoff occurs.

S 865-138
(22) Put the LEFT MAIN FUELING VALVES switch to the OFF position.

S 865-182
(23) Set the LOAD SELECT control on the fueling control panel to a fuel quantity of 41800 pounds (19000 kilograms).

NOTE: Set the LOAD SELECT to "41.8" for an airplane that measures fuel quantity in pounds. Set the LOAD SELECT to "19.0" for an airplane that measures fuel quantity in kilograms. The numerals on the LOAD SELECT control and display are multiplied by 1000 to get the fuel quantity.

S 865-069
(24) Push the CENTER AUX SET switch.

S 215-139
(25) Make sure the set quantity shows on the bottom display of the CENTER AUX LOAD SELECT indicator.

S 865-070
(26) Put the CENTER AUX FUELING VALVES switch to the FUEL position.

S 865-071
(27) Push the OVERFILL TEST switch.

S 655-140
(28) Make sure the fuel flow stops.

BOEING PROPRIETARY - Copyright (C) - Unpublished Work - See title page for details.

S 215-141
(29) Make sure the CENTER AUX LEFT and RIGHT FUELING VALVES lights go off.

S 865-072
(30) Push the OVERFILL RESET switch.

S 215-142
(31) Make sure the CENTER AUX LEFT and RIGHT FUELING VALVES lights go off.

S 865-143
(32) Push the LEFT MAIN, CENTER AUX and RIGHT MAIN SET switches.

S 215-073
(33) Make sure the LEFT MAIN, CENTER AUX and RIGHT MAIN LOAD SELECT indicators are off.

NOTE: The fueling operation for each fuel tank is now in the manual mode. Fueling will continue until manually stopped or until the auto full level is reached.

S 865-074
(34) Put the LEFT MAIN, CENTER AUX and RIGHT MAIN FUELING VALVES switches to the FUEL position.

S 655-075
(35) Continue fueling until the auto full signal stops the fueling.

S 865-076
(36) Put the LEFT MAIN, CENTER AUX and RIGHT MAIN FUELING VALVES switches to the OFF position.

S 485-077
(37) Supply a ground for the fueling valve relays with the A28006 Test Box.
(a) Disconnect the D4942 connector (position 03) from the Left Miscellaneous Electrical Equipment Panel, P36.

BOEING PROPRIETARY - Copyright (C) - Unpublished Work - See title page for details.

(b) Connect the A28006 Test Box connectors between the P36 electrical equipment panel (position 03) and D4942 connector.

S 865-144
(38) Put the switches on the A28006 Test Box to the overfill position.

NOTE: With the switches in the overfill position, the fueling shutoff valves stay open at fuel quantities more than the auto full shutoff quantity.

S 655-078
(39) Decrease the fueling nozzle pressure to 20 psig.

S 865-079
(40) Hold the sump drain valves in the surge tanks open.

S 495-145
(41) Put containers below the sump drain valves to collect fuel.

S 865-080
(42) Put the CENTER AUX FUELING VALVES switch to the FUEL position.

NOTE: The overfill sensors will stop the fueling.

(a) If fueling does not stop 6 seconds after fuel goes into the surge tank, put the CENTER AUX FUELING VALVES switch to the OFF position to manually stop fueling.

S 865-081
(43) Put the CENTER AUX FUELING VALVES switch to the OFF position.

S 865-082
(44) Push the OVERFILL RESET switch.

S 865-146
(45) Put the LEFT MAIN FUELING VALVES switch to the FUEL position.

NOTE: The overfill sensors will stop the fueling.

(a) If fueling does not stop 6 seconds after fuel goes into the surge tank, put the LEFT MAIN FUELING VALVES switch to the OFF position to manually stop fueling.

S 865-147
(46) Put the LEFT MAIN FUELING VALVES switch to the OFF position.

S 865-148
(47) Push the OVERFILL RESET switch.

BOEING PROPRIETARY - Copyright (C) - Unpublished Work - See title page for details.

S 865-149
(48) Put the RIGHT MAIN FUELING VALVES switch to the FUEL position.

NOTE: The overfill sensors will stop the fueling.

(a) If fueling does not stop 6 seconds after fuel goes into the surge tank, put the RIGHT MAIN FUELING VALVES switch to the OFF position to manually stop fueling.

S 865-150
(49) Put the RIGHT MAIN FUELING VALVES switch to the OFF position.

S 865-151
(50) Push the OVERFILL RESET switch.

S 865-083
(51) Close the sump drain valves of the surge tank.

S 865-084
(52) Push and hold the OVERFILL RESET switch.

NOTE: This cancels the overfill system and lets fuel overflow through the fuel vent system.

S 865-085
(53) Put the RIGHT MAIN FUELING VALVES switch to the FUEL position.

S 215-152
(54) Make sure fuel goes out of the fuel vent in the surge tank.

S 865-086
(55) Put the RIGHT MAIN FUELING VALVES switch to the OFF position.

S 865-153
(56) Release the OVERFILL RESET switch.

S 865-169
(57) Push and hold the OVERFILL reset switch.

NOTE: This cancels the overfill system and lets fuel overflow through the fuel vent system.

S 865-154
(58) Put the LEFT MAIN FUELING VALVES switch to the FUEL position.

S 215-155
(59) Make sure fuel goes out of the fuel vent in the surge tank.

BOEING PROPRIETARY - Copyright (C) - Unpublished Work - See title page for details.

S 865-156
(60) Put the LEFT MAIN FUELING VALVES switch to the OFF position.

S 865-157
(61) Release the OVERFILL RESET switch.

S 865-158
(62) Push and hold the OVERFILL RESET switch.

NOTE: This cancels the overfill system and lets fuel overflow through the fuel vent system.

S 865-159
(63) Put the CENTER AUX FUELING VALVES switch to the FUEL position.

S 215-160
(64) Make sure fuel goes out of the fuel vent in the surge tank.

S 865-161
(65) Put the CENTER AUX FUELING VALVES switch to the OFF position.

S 865-162
(66) Release the OVERFILL RESET switch.

I. Put the Airplane Back to Its Usual Condition

S 865-087
(1) Put the switches on the A28006 Test Box to the normal position.

S 085-163
(2) Remove the A28006 Test Box.

S 095-227
(3) Disconnect the fueling nozzle from the fueling adapter (AMM 12-11-01/301).

S 095-226
(4) Disconnect the bonding cable that you connected from the airplane to the fueling source.

S 415-090
(5) Close the fueling station door, 521QB (AMM 06-44-00/201).

BOEING PROPRIETARY - Copyright (C) - Unpublished Work - See title page for details.

S 865-164

WARNING: MOVE ALL PERSONS AND EQUIPMENT AWAY FROM THE SLATS. INJURY TO PERSONS OR DAMAGE TO EQUIPMENT COULD OCCUR IF THEY ARE IN THE SLAT AREA WHEN YOU DO THE ACTIVATION PROCEDURE.

(6) Do the activation procedure for the leading edge slat (AMM 27-81-00/201).

S 865-094

(7) Do the activation procedure for the trailing edge flaps (AMM 27-51-00/201).

S 865-095

(8) Remove electrical power if it is not necessary (AMM 24-22-00/201).

BOEING PROPRIETARY - Copyright (C) - Unpublished Work - See title page for details.

PRESSURE FUELING SYSTEM - INSPECTION/CHECK

1. General
   A. This procedure has instructions to do a check of the fueling receptacle adapter.
   B. If there is fuel leakage or damage at the fueling receptacle adapter, it must be replaced.

TASK 28-21-00-756-001

2. Fueling Receptacle Adapter Check (Fig. 601)
   A. Parts
      (1) Wear Gage, part number 61657-2, JC Carter Company, Inc., 671 W. 17th Street, Costa Mesa, California 92627
   B. References
      (1) AMM 28-21-01/401, Fueling Receptacle
   C. Access
      (1) Location Zone
          521 Leading Edge to Front Spar (Left)

      (2) Access Panel
          521QB Fueling Station Door (Left)

   D. Procedure

      S 016-002
      (1) Open the access door, 521QB, for the refuel station.

      S 866-003
      (2) Make sure the manual defuel lever is closed.

      S 016-005
      (3) Remove the fueling receptacle cap (if it is installed).

      S 216-006
      (4) Do these steps to make sure the fueling receptacle adapter is clean and does not have any damage:
          (a) Examine the adapter to make sure each of the screws that attach the adapter is not loose or damaged.
          (b) Do a detailed visual examination of the cylinder area within 0.5 inch (13 mm) circumferentially on each side of each lug for cracks.

              NOTE: The examination area includes the inner and outer surfaces of the adapter from the bottom of the adapter to the shear groove.

BOEING PROPRIETARY - Copyright (C) - Unpublished Work - See title page for details.

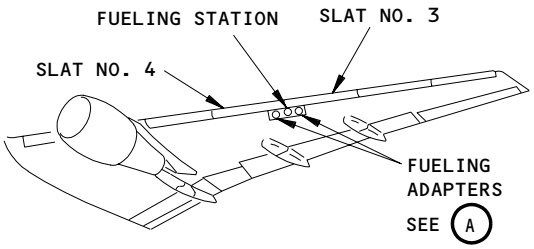

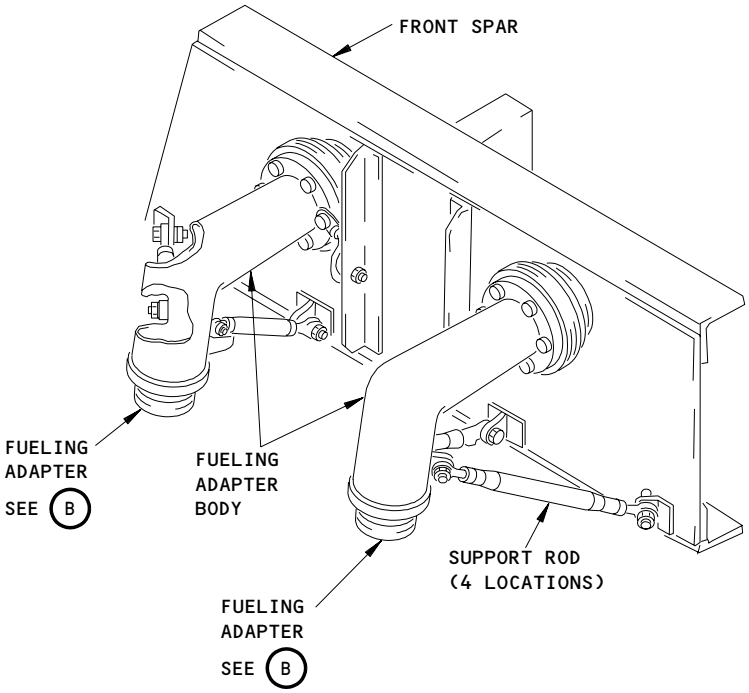

FUELING ADAPTERS

A

Fueling Receptacle Adapter
Figure 601 (Sheet 1)

BOEING PROPRIETARY - Copyright (C) - Unpublished Work - See title page for details.

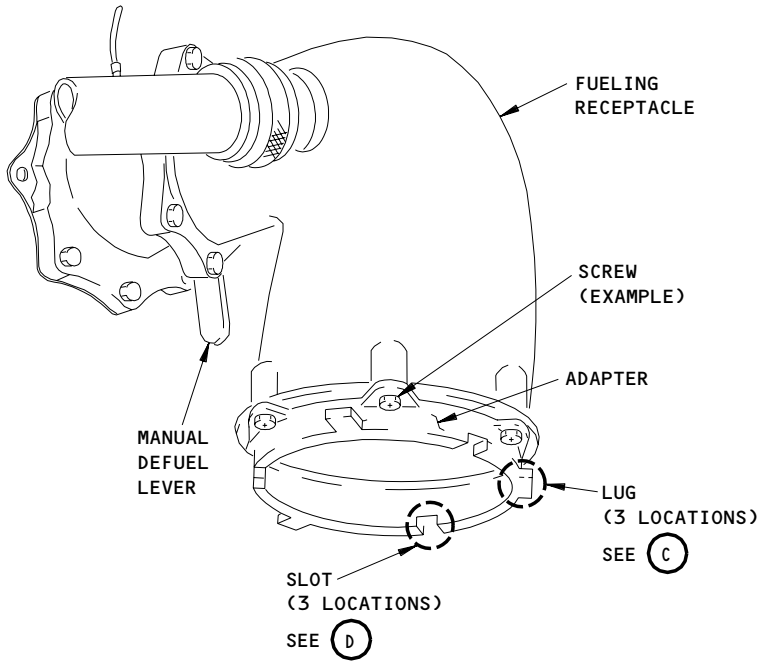

FUELING RECEPTACLE

B

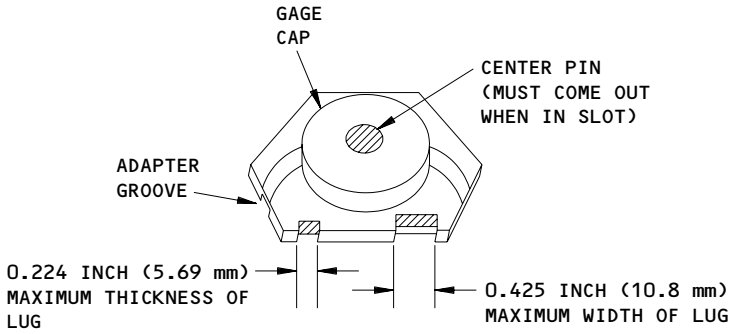

WEAR GAGE

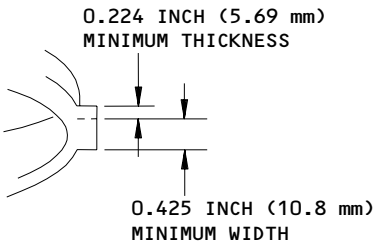

LUG
(3 LOCATIONS)

C

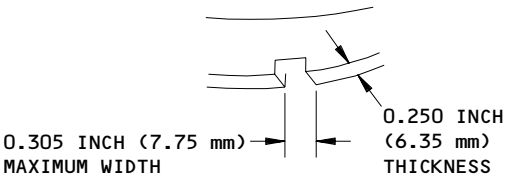

SLOT
(3 LOCATIONS)

D

Fueling Receptacle Adapter
Figure 601 (Sheet 2)

BOEING PROPRIETARY - Copyright (C) - Unpublished Work - See title page for details.

(c) If there are problems with the adapter, replace the adapter (AMM 28-21-01/401).

S 756-007

(5) Make sure the adapter is in these limits:

NOTE: Use of the wear gage is recommended to measure these limits (Fig. 601).

(a) The thickness of the three lugs of the adapter is more than 0.224 inch (5.69 mm) (View C).
(b) The width of the three lugs of the adapter is more than 0.425 inch (10.8 mm) (View C).
(c) The three slots of the adapter must not be worn such that a pin, oblong with full circular ends of 0.305 inch (7.75 mm) width and 0.250 inch (6.35 mm) thickness, can be put into the slots a depth of 0.120 inch (3.05 mm) (View D).

S 216-008

(6) If you use the wear gage to measure the dimensions of the flange, do these steps:
(a) Do these steps to measure the dimensions of the slot:
1) Put the wear gage on the adapter, near one lug so that the gage cap and center pin face away from the adapter, towards you.
2) Make sure the adapter groove in the opposite face of the gage (the face towards the adapter, away from you) fits on the rim of the adapter and moves smoothly along the rim.

NOTE: There are two lines on the face of the wear gage towards you, to help you line up the adapter groove with the adapter rim.

3) Make sure the center pin comes out of the gage cap, towards you.
4) Slide the wear gage around the rim toward the opposite lug until the center pin goes into the slot.
a) If the adapter is okay, you will only hear a slight click and only get a slight feeling of resistance when the center pin touches the slot.

NOTE: The center pin will not move significantly into the slot and will continue to come out from the gage cap.

BOEING PROPRIETARY - Copyright (C) - Unpublished Work - See title page for details.

b) If the adapter is not okay, you will feel more resistance when the center pin goes into the slot.

NOTE: The center pin will be flush (even) with the gage cap or lower than the gage cap.

c) When the center pin is in the slot, do a check to see that the center pin continues to come out from the gage cap, to make sure the center pin has not significantly gone into the slot.
d) If the center pin continues to come out from the gage cap, then the slot is okay.
e) If the center pin is flush (even) with the gage cap or lower than the gage cap, then the slot is not okay.

5) Do this same check for the other two slots on the adapter.

(b) To measure the thickness of the adapter lugs, use the smaller of the two notches on the wear gage.
1) Try to pass the smaller of the two notches across one of the lugs.
2) If the wear gage passes completely across the lug, then the lug has less than the minimum thickness.
a) Replace the adapter (AMM 28-21-01/401).
3) If the wear gage does not pass across the lug, then the lug is okay.
4) Do this same check for the other two lugs.

(c) To measure the thickness of the adapter lugs, use the larger of the two notches on the wear gage.
1) Try to seat the wear gage onto the lug through the larger notch.
2) If you can seat the wear gage onto the lug through the larger notch, then the lug has less than the minimum width.
a) Replace the adapter (AMM 28-21-01/401).
3) If you can not seat the wear gage onto the lug through the larger notch, then the lug is okay.
4) Do this same check for the other two lugs.

S 436-009

(7) If the adapter is not in the correct limits, replace the fueling receptacle adapter (AMM 28-21-01/401).

NOTE: Make sure a new adapter is installed.

BOEING PROPRIETARY - Copyright (C) - Unpublished Work - See title page for details.

E. Put the Airplane Back to the Usual Condition

S 866-010
(1) Make sure the manual defuel lever is correctly positioned closed in the recess for fueling receptacle adapter.

S 436-012
(2) Install the fueling receptacle cap (if applicable).

S 416-013
(3) Close the access door, 521QB, for the refuel station.

BOEING PROPRIETARY - Copyright (C) - Unpublished Work - See title page for details.

FUELING ADAPTER AND POPPET ASSEMBLY - REMOVAL/INSTALLATION

1. General
   A. Two fueling adapters are installed in the left wing, forward of the front spar, between slats No. 3 and 4. Access to the fueling adapters is through the fueling station door. There is a poppet assembly installed in each fueling adapter.
   B. This procedure contains four tasks. The first task removes the fueling adapter. The second task installs the fueling adapter. The third task removes the poppet assembly of the fueling adapter. The fourth task installs the poppet assembly of the fueling adapter.

TASK 28-21-01-004-035

2. Remove the Fueling Adapter (Fig. 401)
   A. References
      (1) AMM 06-44-00/201, Wings - Access Doors and Panels
      (2) AMM 24-22-00/201, Electrical Power Control
      (3) AMM 27-81-00/201, Leading Edge Slat System
   B. Equipment
      (1) Container - Fuel Resistant, 2 Gallon (7.57 Liters)
   C. Access
      (1) Location Zone
          521 Leading Edge to Front Spar (Left)

      (2) Access Panel
          521QB Fueling Station Door (Left)

   D. Procedure

          S 214-001
      (1) Make sure the airplane is grounded to an approved ground.

          S 914-002
      (2) Remove electrical power from the airplane (AMM 24-22-00/201).

          S 094-003
      (3) Disconnect the airplane battery and attach OPEN FUEL TANK - DO NOT CONNECT sign.

          S 094-004
      (4) Put ropes around the fueling station area and install DANGER - OPEN FUEL TANKS signs.

          S 864-005

      WARNING: DO THE DEACTIVATION PROCEDURE OF THE LEADING EDGE SLAT (AMM 27-81-00). IF THE LEADING EDGE SLAT OPERATES ACCIDENTALLY, IT CAN CAUSE INJURY.

      (5) Do the deactivation procedure of the leading edge slats (AMM 27-81-00/201).

BOEING PROPRIETARY - Copyright (C) - Unpublished Work - See title page for details.

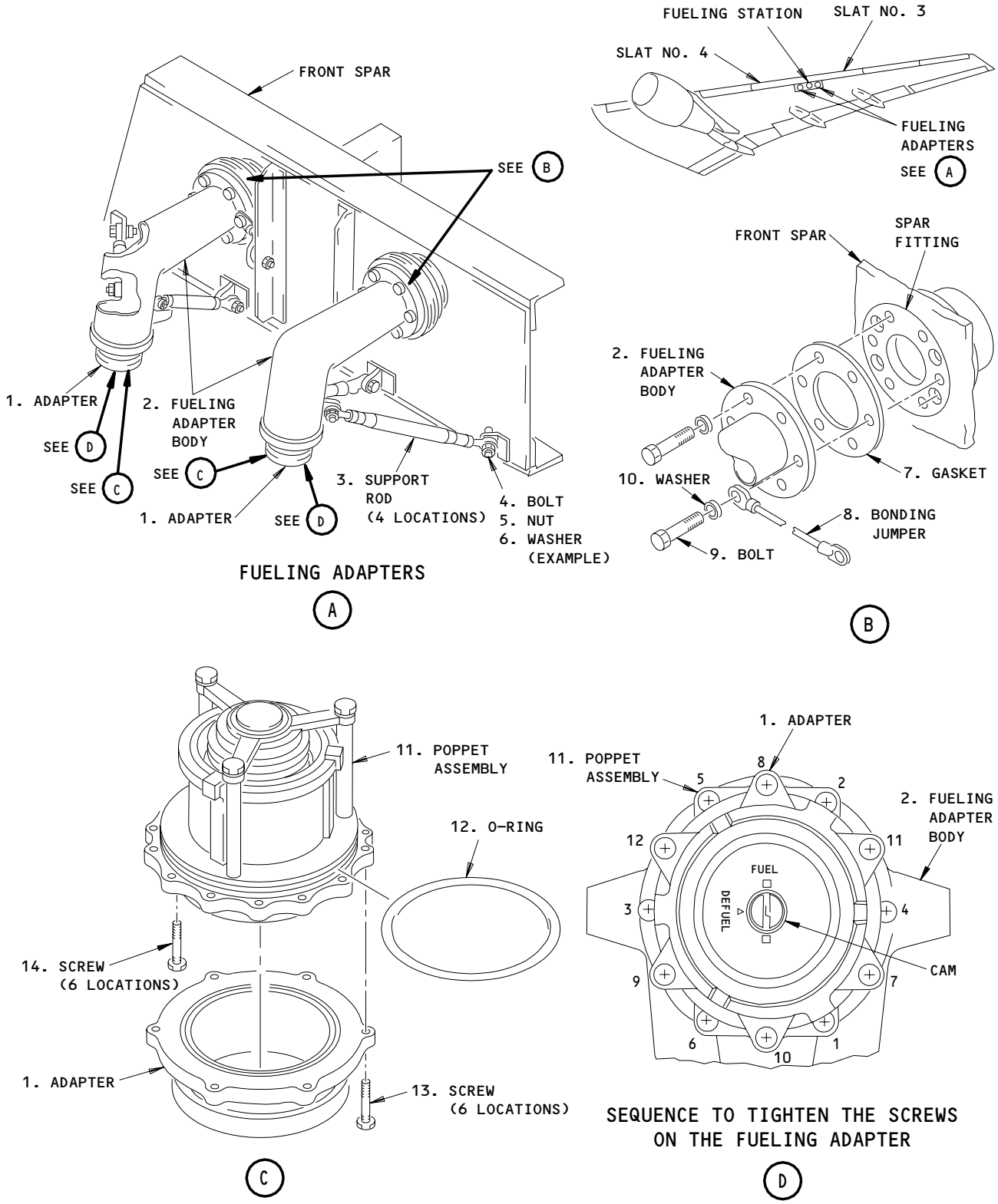

Fueling Adapter and Poppet Assembly Installation
Figure 401

BOEING PROPRIETARY - Copyright (C) - Unpublished Work - See title page for details.

S 014-006
(6) Open the fueling station door, 521QB (AMM 06-44-00/201).

S 014-066

WARNING: WAIT 90 MINUTES AFTER REFUELING THE AIRPLANE BEFORE YOU DRAIN THE REFUELING ADAPTER. IF YOU DRAIN THE REFUELING ADAPTER BEFORE 90 MINUTES, PRESSURIZED FUEL CAN CAUSE AN INJURY OR A FUEL LEAK.

(7) Drain the remaining fuel from the refueling adapter.
(a) Put a container (2 gallon, 7.57 liter) below the refueling adapter to catch the fuel.
(b) Push the poppet valve installed in the refueling adapter in slowly.
(c) Let the fuel drain from the refueling adapter and the refueling manifold.

S 034-007
(8) Remove the bolts (4), nuts (5), and washers (6) that attach the support rods (3) to the fueling adapter body (2) (View A).

S 034-038
(9) Move the support rods (3) away from the fueling adapter body (2).

S 034-008

WARNING: DO NOT REMOVE THE FOUR FLATHEAD BOLTS THAT HOLD THE SPAR FITTING IN THE FUEL TANK. IF YOU REMOVE THE FLATHEAD BOLTS, A FUEL LEAK CAN OCCUR.

(10) Remove the bolts (9) and washers (10) that attach the fueling adapter body (2) to the front spar (View B).

S 024-039
(11) Remove the fueling adapter body (2) and gasket (7).

S 034-040
(12) Discard the gasket (7).

S 434-009
(13) Install the dust cover over the opening in the front spar.

TASK 28-21-01-404-010
3. Install the Fueling Adapter (Fig. 401)

BOEING PROPRIETARY - Copyright (C) - Unpublished Work - See title page for details.

A. References
(1) AMM 06-44-00/201, Wings - Access Doors and Panels
(2) AMM 12-11-01/301, Fuel Tank Pressure Fueling
(3) AMM 20-10-21/601, Electrical Bonding
(4) AMM 24-22-00/201, Electrical Power Control
(5) AMM 27-81-00/201, Leading Edge Slat System

B. Access
(1) Location Zone
521 Leading Edge to Front Spar (Left)

(2) Access Panel
521QB Fueling Station Door (Left)

C. Procedure

S 034-011
(1) Remove the dust cover from the opening in the front spar.

S 214-012
(2) Make sure the seal surface on the front spar is clean.

S 424-013
(3) Use a new gasket (7) and put the fueling adapter body (2) on the front spar.
(a) Align the bolt holes (View B).

S 434-014
(4) Install the bonding jumper (8), washers (10) and bolts (9) that attach the fueling adapter body (2) to the front spar.

NOTE: The bolt that attaches the bonding jumper is longer than the other bolts.

S 224-015
(5) Make sure the bonding resistance between the fueling adapter body (2) and the airplane structure is not more than 0.010 ohms (AMM 20-10-21/601).

BOEING PROPRIETARY - Copyright (C) - Unpublished Work - See title page for details.

S 434-016
(6) Install the bolts (4), nuts (5) and washers (6) that attach the support rods (3) to the fueling adapter body (2).

S 654-017
(7) Refuel the fuel tank if it is necessary (AMM 12-11-01/301).

S 214-042
(8) Make sure there are no fuel leaks at the fueling adapter.

S 414-018
(9) Close the fueling station door, 521QB (AMM 06-44-00/201).

S 864-043

WARNING: MAKE SURE NO PERSONS ARE IN THE SLAT AREA WHEN YOU DO THE ACTIVATION PROCEDURE OF THE LEADING EDGE SLAT. IF PERSONS ARE IN THE SLAT AREA, INJURY CAN OCCUR.

(10) Do the activation procedure of the leading edge slat (AMM 27-81-00/201).

S 094-044
(11) Remove the ropes and DANGER - OPEN FUEL TANKS signs from around the fueling station.

S 494-019
(12) Connect the airplane battery and remove the OPEN FUEL TANK - DO NOT CONNECT signs.

S 914-045
(13) Supply electrical power to the airplane (AMM 24-22-00/201).

TASK 28-21-01-004-053
4. Remove the Poppet Assembly (Fig. 401)
A. References
(1) AMM 06-44-00/201, Wings - Access Doors and Panels
(2) AMM 24-22-00/201, Electrical Power Control
(3) AMM 27-81-00/201, Leading Edge Slat System
B. Access
(1) Location Zone
521 Leading Edge to Front Spar (Left)

BOEING PROPRIETARY - Copyright (C) - Unpublished Work - See title page for details.

(2) Access Panel
521QB Fueling Station Door (Left)

C. Procedure

S 214-020
(1) Make sure the airplane is grounded to an approved ground.

S 914-021
(2) Remove electrical power from the airplane (AMM 24-22-00/201).

S 494-022
(3) Disconnect the airplane battery and attach OPEN FUEL TANK - DO NOT CONNECT sign.

S 494-023
(4) Put ropes around the fueling station area and install DANGER - OPEN FUEL TANKS signs.

S 864-024

WARNING: DO THE DEACTIVATION PROCEDURE OF THE LEADING EDGE SLAT (AMM 27-81-00/201). IF THE LEADING EDGE SLAT OPERATES ACCIDENTALLY, INJURY CAN OCCUR.

(5) Do the deactivation procedure of the leading edge slats (AMM 27-81-00/201).

S 014-025
(6) Open the fueling station door, 521QB (AMM 06-44-00/201).

S 014-067

WARNING: WAIT 90 MINUTES AFTER REFUELING THE AIRPLANE BEFORE YOU DRAIN THE REFUELING ADAPTER. IF YOU DRAIN THE REFUELING ADAPTER BEFORE 90 MINUTES, PRESSURIZED FUEL CAN CAUSE AN INJURY OR A FUEL LEAK.

(7) Drain the remaining fuel from the refueling adapter.
(a) Put a container (2 gallon, 7.57 liter) below the refueling adapter to catch the fuel.
(b) Push the poppet valve installed in the refueling adapter in slowly.
(c) Let the fuel drain from the refueling adapter and the refueling manifold.

S 034-026
(8) Remove the screws (13) that attach the adapter (1) to the fueling adapter body (2) (View C).

BOEING PROPRIETARY - Copyright (C) - Unpublished Work - See title page for details.

S 034-046
(9) Remove the adapter (1) from the fueling adapter body (2).

S 034-027
(10) Remove the screws (14) that attach the poppet assembly (11) to the fueling adapter body (2).

S 024-047
(11) Remove the poppet assembly (11) from the fueling adapter body (2).

S 034-028
(12) Remove the O-ring (12) from the poppet assembly (11) and discard.

TASK 28-21-01-404-029

5. Install the Poppet Assembly (Fig. 401)

A. References
(1) AMM 06-44-00/201, Wings - Access Doors and Panels
(2) AMM 24-22-00/201, Electrical Power Control
(3) AMM 27-81-00/201, Leading Edge Slat System

B. Access
(1) Location Zone
521 Leading Edge to Front Spar (Left)

(2) Access Panel
521QB Fueling Station Door (Left)

C. Procedure

S 644-030
(1) Lubricate the new O-ring (12) with fuel.

S 434-031
(2) Install the O-ring (12) into the groove on the poppet assembly (11).

BOEING PROPRIETARY - Copyright (C) - Unpublished Work - See title page for details.

S 424-031
(3) Put the poppet assembly (11) in the fueling adapter body (2).

S 434-032
(4) Tighten the poppet assembly screws (14) to 28-30 pound-inches in the sequence shown (1 through 6, View D).

S 424-048
(5) Put the adapter (1) in the fueling adapter body (2).

S 434-049
(6) Tighten the adapter screws (13) to 28-30 pound-inches in the sequence shown (7 through 12, View D).

S 414-033
(7) Close the fueling station door, 521QB (AMM 06-44-00/201).

S 864-050

WARNING: MAKE SURE NO PERSONS ARE IN THE SLAT AREA WHEN YOU DO THE ACTIVATION OF THE LEADING EDGE SLAT PROCEDURE. IF PERSONS ARE IN THE SLAT AREA, INJURY CAN OCCUR.

(8) Do the activation of the leading edge slat procedure (AMM 27-81-00/201).

S 094-051
(9) Remove the ropes and DANGER - OPEN FUEL TANKS signs from around the fueling station.

S 494-034
(10) Connect the airplane battery and remove the OPEN FUEL TANK - DO NOT CONNECT signs.

S 864-052
(11) Supply electrical power to the airplane (AMM 24-22-00/201).

BOEING PROPRIETARY - Copyright (C) - Unpublished Work - See title page for details.

FUELING ADAPTER - INSPECTION/CHECK

TASK 28-21-01-006-001

1. Fueling Adapter - Bonding Resistance Check (Fig. 601)
   A. References
      (1) AMM 06-44-00/201, Wings - Access Doors and Panels
      (2) AMM 24-22-00/201, Electrical Power Control
      (3) AMM 27-81-00/201, Leading Edge Slat System
      (4) SWPM 20-20-00, Electrical Bonds and Grounds
   B. Equipment
      (1) Bonding Meter - Use one of these:
         (a) Bonding Meter - T477W
             Avtron Manufacturing Co.
             Cleveland, OH
         (b) Bonding Meter - Model M1
             (Serial Number A000012 and subsequent)
             BCD Electronics Ltd.
             Vancouver, Canada
   C. Access
      (1) Location Zone
          521 Leading Edge to Front Spar (Left)

      (2) Access Panel
          521QB Fueling Station Door (Left)

   D. Prepare for the Procedure

          S 216-002
      (1) Make sure the airplane is grounded to an approved ground.

          S 916-003
      (2) Remove electrical power from the airplane (AMM 24-22-00/201).

          S 866-006

      WARNING: DO THE DEACTIVATION PROCEDURE OF THE LEADING EDGE SLAT (AMM 27-81-00). IF THE LEADING EDGE SLAT OPERATES ACCIDENTALLY, IT CAN CAUSE INJURY.

      (3) Do the deactivation procedure of the leading edge slats (AMM 27-81-00/201).

          S 016-007
      (4) Open the fueling station door, 521QB (AMM 06-44-00/201).

BOEING PROPRIETARY - Copyright (C) - Unpublished Work - See title page for details.

E. Electrical Bonding Measurement

S 766-070

(1) Measure the electrical bonding resistance between the fueling adapter and the structure (SWPM 20-20-00).

(a) Make sure the electrical bonding resistance is 0.010 ohm (10 milliohms) or less.

F. Put the Airplane Back to Its Usual Condition

S 416-026

(1) Close the fueling station door, 521QB (AMM 06-44-00/201).

S 866-027

WARNING: MAKE SURE NO PERSONS ARE IN THE SLAT AREA WHEN YOU DO THE ACTIVATION PROCEDURE OF THE LEADING EDGE SLAT. IF PERSONS ARE IN THE SLAT AREA, INJURY CAN OCCUR.

(2) Do the activation procedure of the leading edge slat (AMM 27-81-00/201).

S 916-030

(3) Supply electrical power to the airplane (AMM 24-22-00/201).

BOEING PROPRIETARY - Copyright (C) - Unpublished Work - See title page for details.

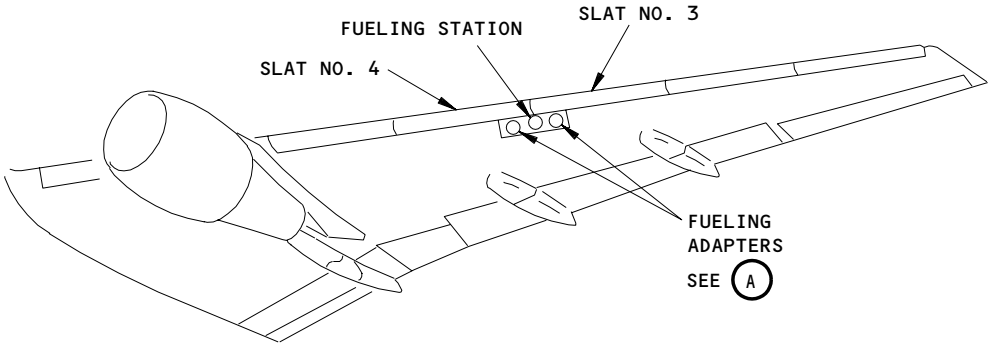

LEFT WING
(RIGHT WING IS OPPOSITE)

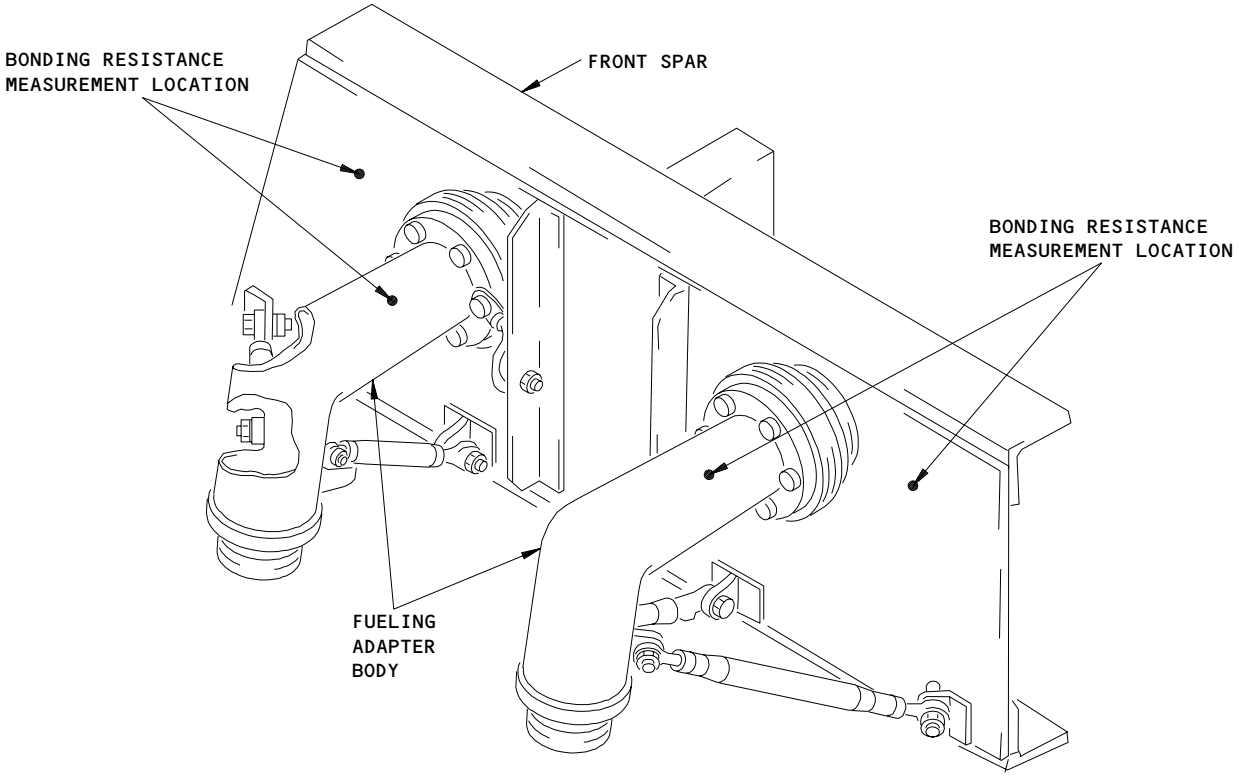

FUELING ADAPTERS

A

Fueling Adapter and Poppet Assembly Inspection
Figure 601

BOEING PROPRIETARY - Copyright (C) - Unpublished Work - See title page for details.

FUELING SHUTOFF VALVE - REMOVAL/INSTALLATION

1. General
   A. There are three fueling shutoff valves installed on the rear spar of each wing. The fueling shutoff valves are found in the fuel tank on the front of the rear spar. The control units of the fueling shutoff valves are installed on the rear spar out of the fuel tank.
   B. It is necessary to remove the control unit before you remove the fueling shutoff valve. Removal/Installation of the control unit of the fueling shutoff valve is found in AMM 28-21-12/401.
   C. This procedure contains two tasks. The first task removes the fueling shutoff valve. The second task installs the fueling shutoff valve.

TASK 28-21-02-004-001

2. Remove the Fueling Shutoff Valve (Fig. 401)
   A. References
      (1) AMM 28-11-00/201, Fuel Tanks (Purging and Entry)
      (2) AMM 28-11-01/401, Main Tank Access Door
      (3) AMM 28-11-02/401, Auxiliary Tank Access Door
      (4) AMM 28-21-12/401, Fueling Shutoff Valve Control Unit
      (5) AMM 28-26-00/201, Defueling
   B. Access
      (1) Location Zones

531	Center Auxiliary Tank (Left)
532	Main Tank - Inboard of Rib No. 10 (Left)
541	Main Tank - Outboard of Rib No. 10 (Left)
631	Center Auxiliary Tank (Right)
632	Main Tank - Inboard of Rib No. 10 (Right)
641	Main Tank - Outboard of Rib No. 10 (Right)

      (2) Access Panels

531BB	Auxiliary Tank Access Door (Left)
532BB	Main Tank Access Door (Left)
541HB	Main Tank Access Door (Left)
631BB	Auxiliary Tank Access Door (Right)
632BB	Main Tank Access Door (Right)
641HB	Main Tank Access Door (Right)

BOEING PROPRIETARY - Copyright (C) - Unpublished Work - See title page for details.

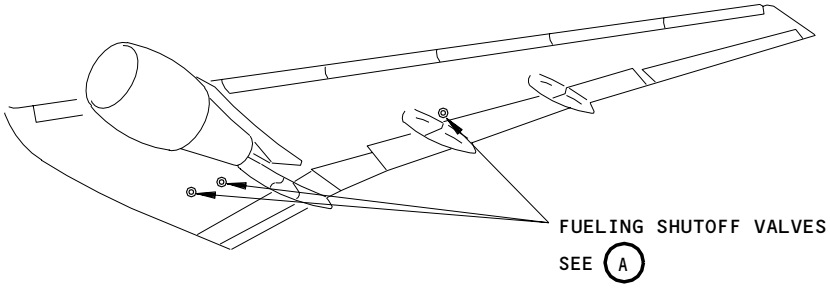

LEFT WING
(RIGHT WING IS OPPOSITE)

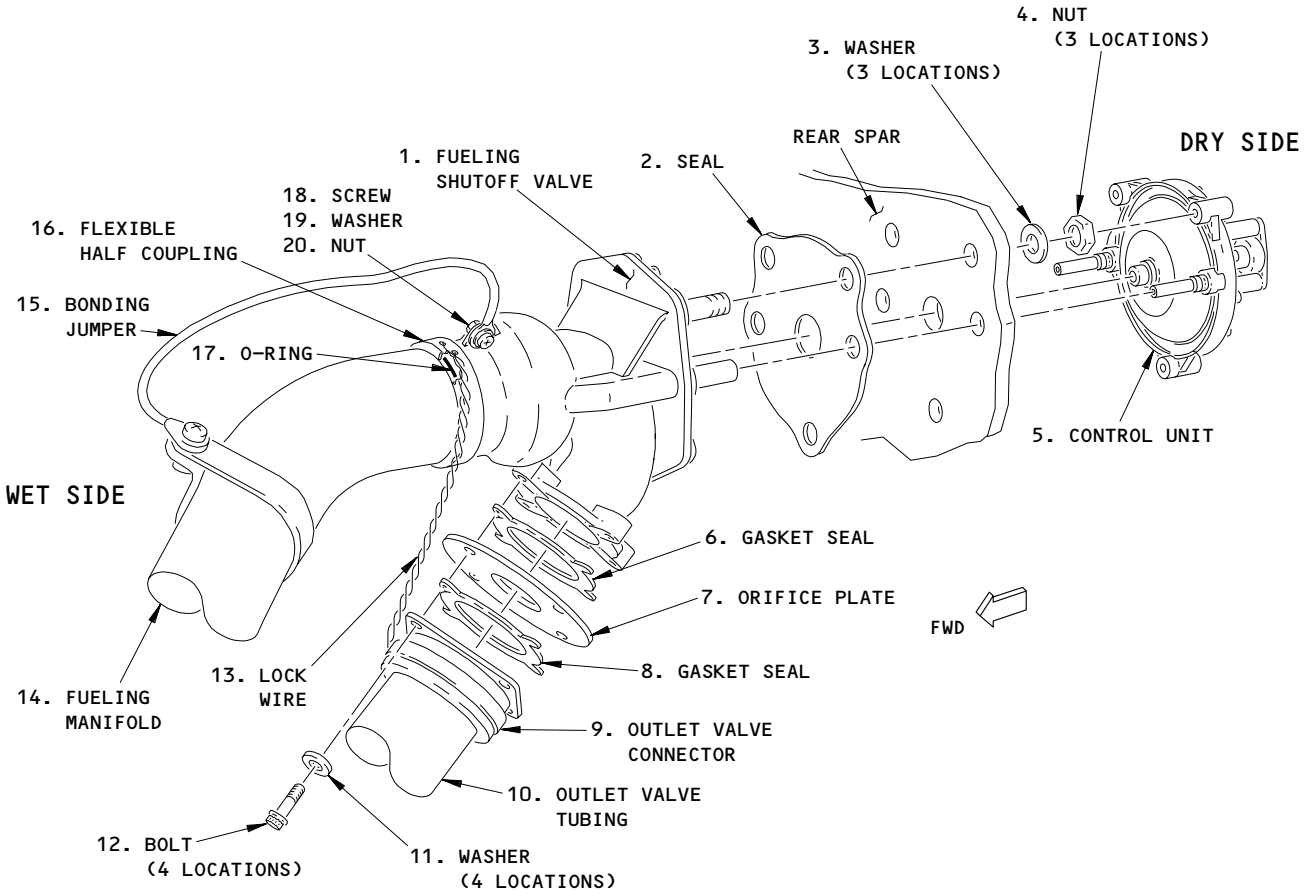

FUELING SHUTOFF VALVE

A

Fueling Shutoff Valve Installation
Figure 401

BOEING PROPRIETARY - Copyright (C) - Unpublished Work - See title page for details.

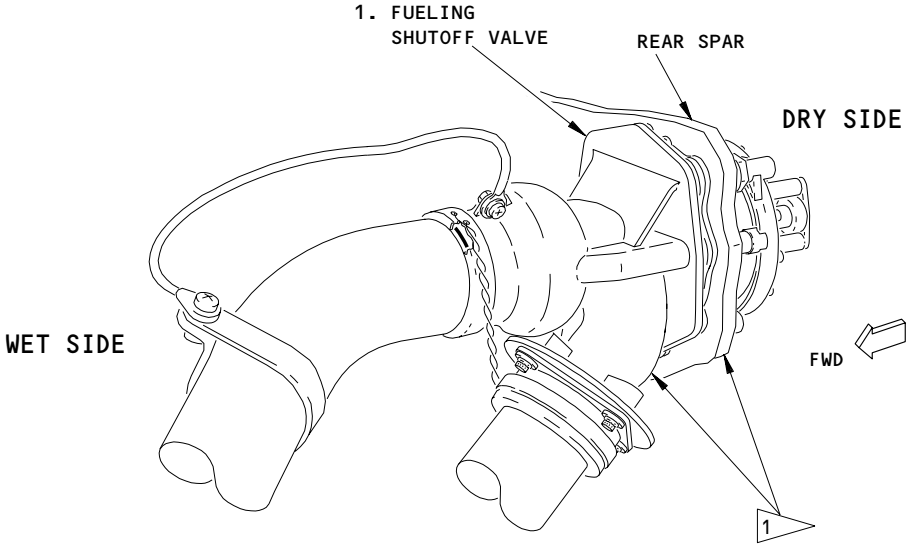

FUELING SHUTOFF VALVE

1 RESISTANCE FROM CENTER TANK FUELING SHUTOFF VALVE TO REAR SPAR NOT TO EXCEED 0.0025 OHM (2.5 MILLIOHMS).

Fueling Shutoff Valve Resistance Measurement
Figure 402

BOEING PROPRIETARY - Copyright (C) - Unpublished Work - See title page for details.

C. Procedure

S 654-036
(1) Defuel the applicable tank (AMM 28-26-00/201).

S 034-053
(2) Remove the applicable control unit (5) of the fueling shutoff valve (AMM 28-21-12/401).

S 014-012
(3) To get access to the fueling shutoff valve in the left or right auxiliary fuel tank, remove the left or right auxiliary tank access door, 531BB or 631BB (AMM 28-11-02/401).

S 014-013
(4) To get access to the inboard fueling shutoff valve in the left or right main fuel tank, remove the left or right main tank access door, 532BB or 632BB (AMM 28-11-01/401).

S 014-014
(5) To get access to the outboard fueling shutoff valve in the left or right main fuel tank, remove the left or right main tank access door, 541HB or 641HB (AMM 28-11-01/401).

S 914-002

WARNING: OBEY THE FUEL TANK ENTRY PRECAUTIONS (AMM 28-11-00/201). FAILURE TO OBEY THE FUEL TANK ENTRY PRECAUTIONS CAN CAUSE INJURY OR DAMAGE.

(6) Obey the fuel tank entry precautions (AMM 28-11-00/201).

S 034-015
(7) Remove the nuts (4) and washers (3) which hold the fueling shutoff valve (1) in position.

S 034-016
(8) Remove the lockwire (13) that attaches the fueling manifold flexible coupling (16) and the valve outlet connector (9).

S 034-017
(9) Remove the screw (18), washer (19) amd nut (20) to disconnect the bonding jumper (15) from the fueling shutoff valve (1).

S 034-018
(10) Hold the fueling shutoff valve (1).

S 344-040
(11) Disconnect the flexible half coupling (16) from fueling manifold (14).

BOEING PROPRIETARY - Copyright (C) - Unpublished Work - See title page for details.

S 344-041
(12) Remove the four bolts (12) and washers (11) from the outlet valve connector (9).

S 344-042
(13) Remove the orifice plate (7) and the two gaskets (6,8) from the fueling shutoff valve (1).

S 344-043
(14) Remove the fueling shutoff valve (1) from the rear spar.

S 034-019
(15) Remove the seal (2).

S 494-044
(16) Put covers on the holes in the outlet valve tubing (10) and the fueling manifold (14) to keep unwanted materials out.

TASK 28-21-02-404-021
3. Install the Fueling Shutoff Valve (Fig. 401)
A. Consumable Materials
(1) A00767 Sealant - Integral Fuel Tank BMS 5-45
B. Parts

BOEING PROPRIETARY - Copyright (C) - Unpublished Work - See title page for details.

AMM			AIPC		
FIG	ITEM	NOMENCLATURE	SUBJECT	FIG	ITEM
401	1	Fueling Shutoff Valve (Valve Unit Assy)	28-21-01	01	190A 475A 705A
			28-21-12	01	75 210
				02	70 350 450
				03	210 520
				05	145 270
	2	Seal	28-21-01	01	199 484 714
			28-21-12	01	105 250
				02	100 475
				03	195 495
				05	175 310

C. References
(1) AMM 12-11-01/301, Fuel Tank Pressure Fueling
(2) AMM 20-10-21/601, Electrical Bonding
(3) AMM 20-10-23/401, Lockwires
(4) AMM 28-11-00/201, Fuel Tanks (Purging and Entry)
(5) AMM 28-11-01/401, Main Tank Access Door
(6) AMM 28-11-02/401, Auxiliary Tank Access Door
(7) AMM 28-21-12/401, Fueling Shutoff Valve Control Unit
(8) AMM 51-31-01/201, Seals and Sealing
(9) SWPM 20-20-00, Standard Wiring Practices Manual

D. Access
(1) Location Zones
531 Center Auxiliary Tank (Left)
532 Main Tank - Inboard of Rib No. 10 (Left)
541 Main Tank - Outboard of Rib No. 10 (Left)
631 Center Auxiliary Tank (Right)
632 Main Tank - Inboard of Rib No. 10 (Right)
641 Main Tank - Outboard of Rib No. 10 (Right)

BOEING PROPRIETARY - Copyright (C) - Unpublished Work - See title page for details.

(2) Access Panels

531BB	Auxiliary Tank Access Door (Left)
532BB	Main Tank Access Door (Left)
541HB	Main Tank Access Door (Left)
631BB	Auxiliary Tank Access Door (Right)
632BB	Main Tank Access Door (Right)
641HB	Main Tank Access Door (Right)

E. Procedure

S 914-003

WARNING: OBEY THE FUEL TANK ENTRY PRECAUTIONS. FAILURE TO OBEY THE FUEL TANK ENTRY PRECAUTIONS CAN CAUSE INJURY OR DAMAGE.

(1) Obey the fuel tank entry precautions (AMM 28-11-00/201).

S 094-045

(2) Remove the covers from the tubing and the fueling manifold.

S 214-022

(3) Make sure the seal surfaces where the fueling shutoff valve (1) and rear spar touch are clean.

S 764-058

(4) Prepare the fay surfaces of the rear spar and the valve body for an electrical bond (SWPM 20-20-00).

NOTE: CENTER TANK FUELING SHUTOFF VALVE ONLY;
CDCCL - Refer to the task: Airworthiness Limitation Precautions (AMM 28-00-00/201), for important information on Critical Design Configuration Control Limitations (CDCCLs).

NOTE: This is applicable to Airworthiness Limitation 28-AWL-10.

S 424-023

(5) Put and hold the valve body (1) and the seal (2) on the rear spar.

S 424-024

(6) Install the washers (3) and the valve mounting nuts (4) on the valve body (1) at the rear spar, external to the fuel tank.

S 424-047

(7) Tighten the nuts (4).

S 914-004

(8) Install lockwire on the valve mounting nuts (4).

BOEING PROPRIETARY - Copyright (C) - Unpublished Work - See title page for details.

S 394-025
(9) Apply sealant around the interface of the fueling shutoff valve and the rear spar and around the center shaft (AMM 51-31-01/201).

S 434-026
(10) Put the gasket seal (6,8) on each side of the orifice plate (7).

S 434-051
(11) Align the orifice plate (7) on the fueling shutoff valve (1).

S 434-005
(12) Install the mounting bolts (12) and the washers (11).

S 434-027
(13) Use a new O-ring (17) and connect the flexible half coupling (16) between the fueling shutoff valve (1) and the fueling manifold (14).

S 914-028
(14) Install lockwire (13) on the fueling manifold flexible half coupling (16) and the valve outlet connector (9) (AMM 20-10-23/401).

S 434-029
(15) Install the screw (18), washer (19) and nut (20) to attach the bonding jumper (15) to the fueling shutoff valve (1).

S 224-030
(16) Measure the bonding resistance between the valve body and the rear spar inside the tank (AMM 20-10-21/601).

NOTE: CENTER TANK FUELING SHUTOFF VALVE ONLY;
CDCCL - Refer to the task: Airworthiness Limitation Precautions (AMM 28-00-00/201), for important information on Critical Design Configuration Control Limitations (CDCCLs).

NOTE: This is applicable to Airworthiness Limitation 28-AWL-10.

(a) Make sure the resistance is 0.0025 ohm (2.5 milliohms) or less.

NOTE: CENTER TANK FUELING SHUTOFF VALVE ONLY;
CDCCL - Refer to the task: Airworthiness Limitation Precautions (AMM 28-00-00/201), for important information on Critical Design Configuration Control Limitations (CDCCLs).

NOTE: This is applicable to Airworthiness Limitation 28-AWL-10.

BOEING PROPRIETARY - Copyright (C) - Unpublished Work - See title page for details.

(b) Apply a fillet seal of BMS 5-45 sealant completely around the gaskoseal and the fueling shutoff valve.

NOTE: CENTER TANK FUELING SHUTOFF VALVE ONLY;
CDCCL - Refer to the task: Airworthiness Limitation Precautions (AMM 28-00-00/201), for important information on Critical Design Configuration Control Limitations (CDCCLs).

NOTE: This is applicable to Airworthiness Limitation 28-AWL-10.

S 414-007
(17) For the fueling shutoff valve in the left or right auxiliary tank, close the left or right auxiliary tank access door, 531BB or 631BB (AMM 28-11-02/401).

S 414-008
(18) For the inboard fueling shutoff valve in the left or right main fuel tank, close the left or right main tank access door, 532BB or 632BB (AMM 28-11-01/401).

S 414-009
(19) For the outboard fueling shutoff valve in the left or right main fuel tank, close the left or right main tank access door, 541HB or 641HB (AMM 28-11-01/401).

S 024-031
(20) Install the control unit (5) of the fueling shutoff valve (AMM 28-21-12/401).

S 434-032
(21) Install the electrical connector.

S 654-033
(22) Refuel the applicable fuel tank (AMM 12-11-01/301).

S 714-054
(23) Make sure the fueling shutoff valve operates correctly.

S 214-034
(24) Make sure the control unit (5) of the fueling shutoff valve does not leak.

BOEING PROPRIETARY - Copyright (C) - Unpublished Work - See title page for details.

SURGE TANK FUEL LEVEL SENSOR - REMOVAL/INSTALLATION

1. General
   A. There are two fuel level sensors, one in each surge tank (Fig. 401).
   B. The fuel level sensor contains a fuel level sensor, sealed rib connection, and sensor wiring. The fuel level sensor is removed and installed as a single unit.
   C. This procedure contains two tasks. The first task removes the fuel level sensor. The second task installs the fuel level sensor.

TASK 28-21-03-004-008

2. Remove the Fuel Level Sensor (Fig. 401)
   A. References
      (1) AMM 28-11-00/201, Fuel Tanks (Purging and Entry)
      (2) AMM 28-11-03/401, Surge Tank Access Door
   B. Access
      (1) Location Zones
          542 Surge Tank (Left)
          642 Surge Tank (Right)

      (2) Access Panels
          542AB Surge Tank Access Door (Left)
          642AB Surge Tank Access Door (Right)

   C. Procedure

      S 864-009
      (1) Open this circuit breaker on the main power distribution panel, P6, and attach a DO-NOT-CLOSE tag:
          (a) 6E5, FUELING CONTROL

      S 864-010
      (2) Open this circuit breaker on the APU external power panel, P34, and attach a DO-NOT-CLOSE tag:
          (a) 34L3, FLNG CONT

      S 014-019
      (3) Remove the left or right surge tank access door, 542AB or 642AB (AMM 28-11-03/401).

      S 654-011

      WARNING: OBEY THE FUEL TANK ENTRY PRECAUTIONS. FAILURE TO OBEY THE FUEL TANK ENTRY PRECAUTIONS CAN CAUSE INJURY OR DAMAGE.

      (4) Obey fuel tank entry precautions (AMM 28-11-00/201).

      S 034-007
      (5) Go into the fuel tank and disconnect the sensor wiring at the terminal block on the mounting bracket.

BOEING PROPRIETARY - Copyright (C) - Unpublished Work - See title page for details.

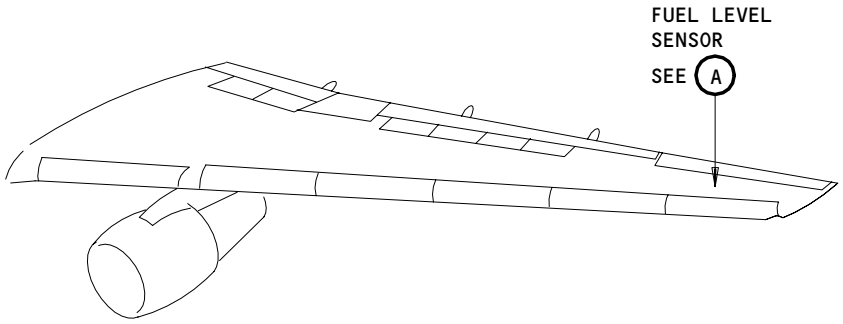

LEFT WING SHOWN
(RIGHT WING OPPOSITE)

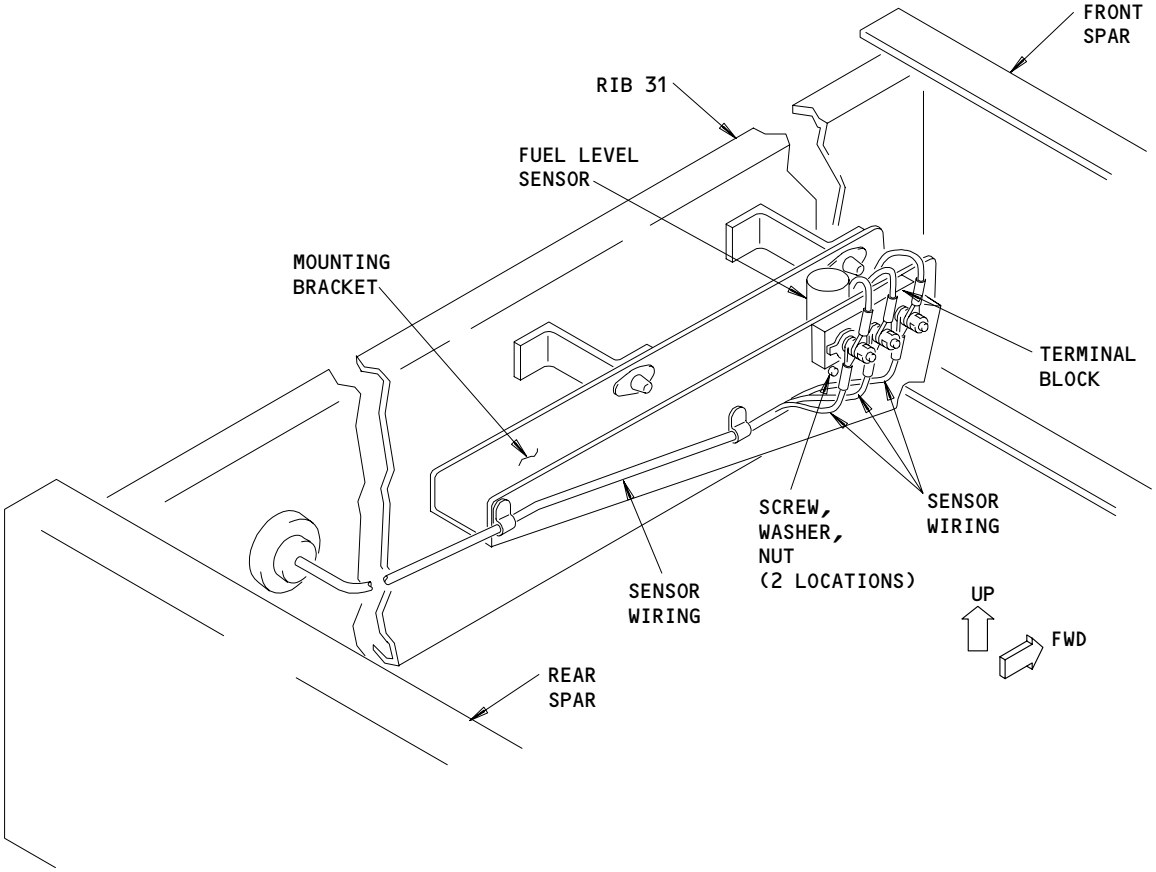

FUEL LEVEL SENSOR
A

Surge Tank Fuel Level Sensor Installation
Figure 401

BOEING PROPRIETARY - Copyright (C) - Unpublished Work - See title page for details.

S 974-012

(6) Make a written record of the sensor wire color codes for installation.

S 034-006

(7) Remove the screws, washers, and nuts that hold the fuel level sensor to the mounting bracket, on the inboard wall of the surge tank.

S 024-005

(8) Remove the fuel level sensor from the fuel tank.

TASK 28-21-03-404-004

3. Install the Fuel Level Sensor (Fig. 401)

A. References

(1) AMM 12-11-01/301, Fuel Tank Pressure Fueling

(2) AMM 28-11-00/201, Fuel Tanks (Purging and Entry)

(3) AMM 28-11-03/401, Surge Tank Access Door

B. Access

(1) Location Zones

542 Surge Tank (Left)

642 Surge Tank (Right)

(2) Access Panels

542AB Surge Tank Access Door (Left)

642AB Surge Tank Access Door (Right)

C. Procedure

S 654-013

WARNING: OBEY THE FUEL TANK ENTRY PRECAUTIONS. FAILURE TO OBEY THE FUEL TANK ENTRY PRECAUTIONS CAN CAUSE INJURY OR DAMAGE.

(1) Obey the fuel tank entry precautions (AMM 28-11-00/201).

BOEING PROPRIETARY - Copyright (C) - Unpublished Work - See title page for details.

S 024-003
(2) Put and hold the fuel level sensor on the mounting bracket.

S 424-014
(3) Install the screws, washers and nuts to attach the fuel level sensor to the mounting bracket.

S 434-002
(4) Connect the sensor wiring at the terminal block.

S 414-001
(5) Install the surge tank access door, 542AB or 642AB (AMM 28-11-03/401).

S 864-018
(6) Remove the DO-NOT-CLOSE tag and close this circuit breaker on the P6 panel:
(a) 6E5, FUELING CONTROL

S 864-017
(7) Remove the DO-NOT-CLOSE tag and close this circuit breaker on the P34 panel:
(a) 34L3, FLNG CONT

BOEING PROPRIETARY - Copyright (C) - Unpublished Work - See title page for details.

SURGE TANK FUEL LEVEL SENSOR CONTROL CARD - REMOVAL/INSTALLATION

1. General
   A. The control card of the fuel level sensor is found in the P50 card file of the right main equipment center.
   B. This procedure contains two tasks. The first task removes the control card of the fuel level sensor. The second task installs the control card of the fuel level sensor.

TASK 28-21-04-004-001

2. Remove the Control Card of the Fuel Level Sensor (Fig. 401)
   A. Equipment
      (1) Safety Barrier - E/E Access Hatch, A53002-5
   B. References
      (1) AMM 06-41-00/201, Fuselage Access Doors and Panels
      (2) AMM 20-41-01/201, Electrostatic Discharge Sensitive Devices
   C. Access
      (1) Location Zone
          119 Main Equipment Center (Left and Right)

      (2) Access Panel
          119AL Electronics Access Door

   D. Procedure

      S 864-002
      (1) Open this circuit breaker on the main power distribution panel, P6, and attach DO-NOT-CLOSE tag:
          (a) 6E5, FUELING CONTROL

      S 864-003
      (2) Open this circuit breaker on the APU external power panel, P34, and attach DO-NOT-CLOSE tag:
          (a) 34L3, FLNG CONT

      S 014-012

      WARNING: MAKE SURE THE ELECTRONICS ACCESS DOOR (119AL) IS IN THE FULL OPEN POSITION. IF THE ELECTRONICS ACCESS DOOR IS NOT IN THE FULL OPEN POSITION, IT CAN ACCIDENTALLY MOVE AND CAUSE INJURY.

      (3) Push the electronics access door (119AL) to the full open position to engage the hold open detent (AMM 06-41-00/201).

      S 014-013
      (4) Go into the main equipment center.

      S 494-014
      (5) Install the safety barrier across the opening of the electronics access door.

BOEING PROPRIETARY - Copyright (C) - Unpublished Work - See title page for details.

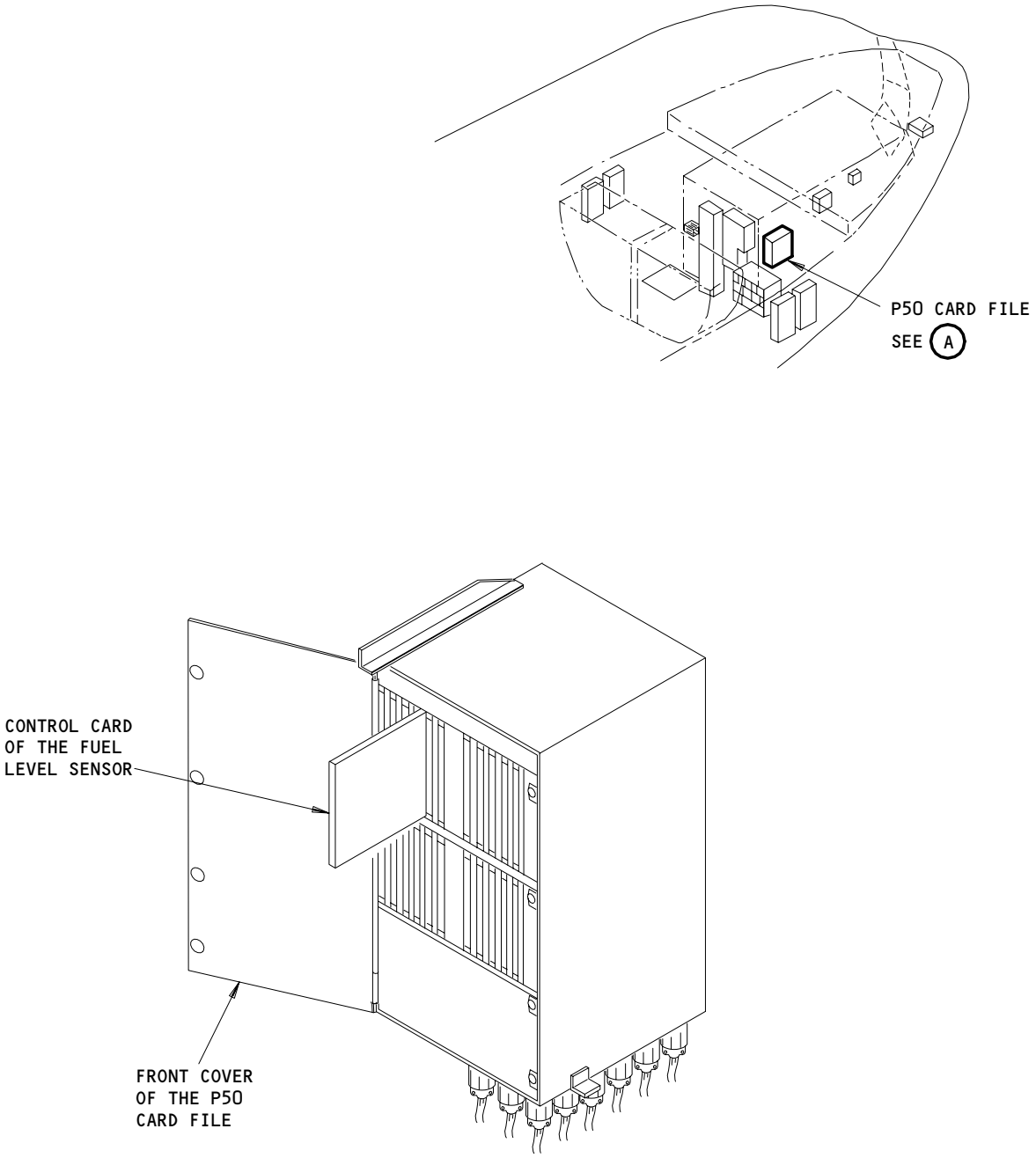

Surge Tank Fuel Level Sensor Control Card Installation
Figure 401

BOEING PROPRIETARY - Copyright (C) - Unpublished Work - See title page for details.

S 914-005

CAUTION: REFER TO AMM 20-41-01/201 FOR REMOVAL OF THE CONTROL CARD. THE CONTROL CARD IS A STATIC SENSITIVE DEVICE. IF YOU ARE NOT CAREFUL, DAMAGE TO THE CONTROL CARD AND P50 CARD FILE CAN OCCUR.

(6) Open the front cover of the P50 card file.

S 024-015

(7) Pull on the two extractors installed on top of the control card to remove the control card from the P50 card file.

TASK 28-21-04-404-016

3. Install the Control Card of the Fuel Level Sensor (Fig. 401)

A. Equipment

(1) Safety Barrier - E/E Access Hatch, A53002-5

B. References

(1) AMM 06-41-00/201, Fuselage Access Doors and Panels

(2) AMM 12-11-01/301, Fuel Tank Pressure Fueling

(3) AMM 20-41-01/201, Electrostatic Discharge Sensitive Devices

C. Access

(1) Location Zone

119 Main Equipment Center (Left and Right)

(2) Access Panel

119AL Electronics Access Door

D. Procedure

S 424-004

CAUTION: REFER TO AMM 20-41-01/201 FOR INSTALLATION OF THE CONTROL CARD. THE CONTROL CARD IS A STATIC SENSITIVE DEVICE. IF YOU ARE NOT CAREFUL, DAMAGE TO THE CONTROL CARD AND THE P50 CARD FILE CAN OCCUR.

(1) Install the control card in the P50 card file.

BOEING PROPRIETARY - Copyright (C) - Unpublished Work - See title page for details.

S 424-006
(2) Push the control card to make sure the two extractors engage.

S 414-007
(3) Close and latch the front cover of the P50 card file.

S 094-017
(4) Remove the safety barrier.

S 414-018
(5) Go out of the main equipment center.

S 414-019
(6) Close the electronics access door, 119AL (AMM 06-41-00/201).

S 864-008
(7) Remove the DO-NOT-CLOSE tag and close this circuit breaker on the P6 panel:
(a) 6E5, FUEL CONTROL

S 864-009
(8) Remove the DO-NOT-CLOSE tag and close this circuit breaker on the P34 panel:
(a) 34L3, FLNG CONT

S 654-010
(9) Refuel the fuel tanks if it is necessary (AMM 12-11-01/301).

S 654-011
(10) Do the Overfill Test procedure (AMM 12-11-01/301).

BOEING PROPRIETARY - Copyright (C) - Unpublished Work - See title page for details.

FUELING MANIFOLD DRAIN CHECK VALVE - REMOVAL/INSTALLATION

1. General
   A. There are two drain check valves, one in the left and one in the right auxiliary fuel tank. The drain check valves are found along the fueling manifold, outboard of the side of body rib.
   B. This procedure contains two tasks. The first task removes the drain check valve of the fueling manifold. The second task installs the drain check valve of the fueling manifold.

TASK 28-21-05-004-001

2. Remove the Drain Check Valve of the Fueling Manifold (Fig. 401)
   A. References
      (1) AMM 12-11-03/301, Fuel Sump Draining
      (2) AMM 28-11-00/201, Fuel Tank (Purging and Entry)
      (3) AMM 28-11-02/401, Auxiliary Tank Access Door
      (4) AMM 28-26-00/201, Defueling
   B. Access
      (1) Location Zones
          531 Center Auxiliary Tank (Left)
          631 Center Auxiliary Tank (Right)

      (2) Access Panels
          531BB Auxiliary Tank Access Door (Left)
          631BB Auxiliary Tank Access Door (Right)

   C. Procedure

      S 654-006
      (1) Defuel the auxiliary fuel tank (AMM 28-26-00/201).

      NOTE: After you defuel the auxiliary fuel tank, the fuel in the fueling manifold drains to the auxiliary fuel tank (30 gallons).

      S 654-007
      (2) Drain the auxiliary fuel tank (AMM 12-11-03/301).

      S 014-008
      (3) Remove the left or right auxiliary fuel tank access door, 531BB or 631BB (AMM 28-11-02/401).

BOEING PROPRIETARY - Copyright (C) - Unpublished Work - See title page for details.

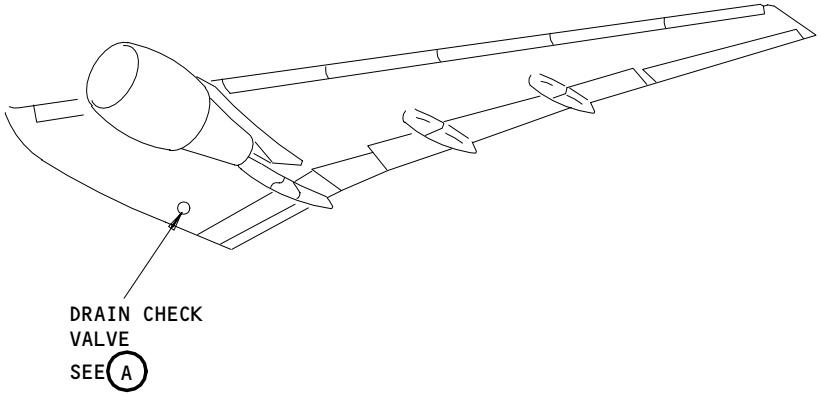

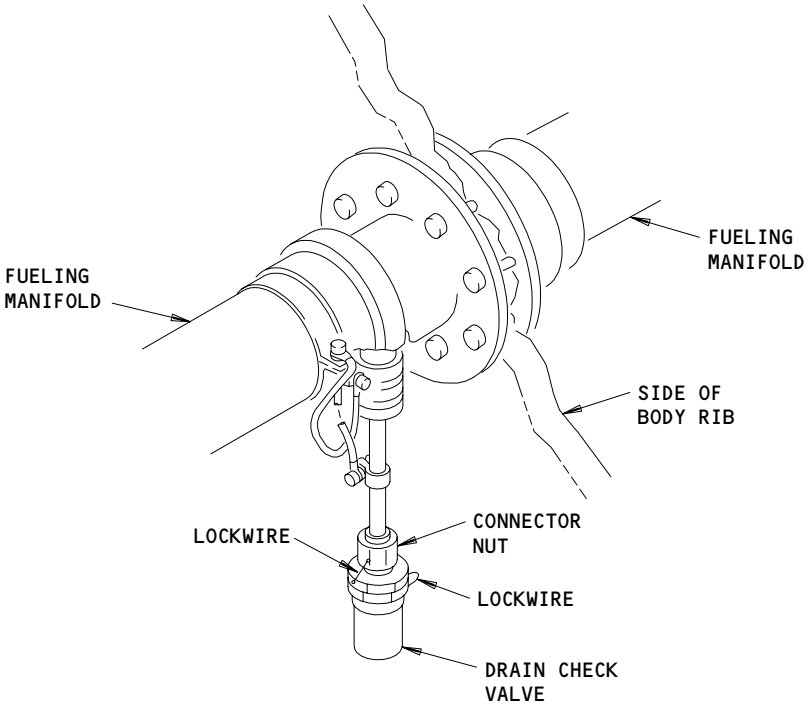

DRAIN CHECK VALVE

A

Fueling Manifold Drain Check Valve Installation
Figure 401

BOEING PROPRIETARY - Copyright (C) - Unpublished Work - See title page for details.

S 014-002

WARNING: OBEY THE FUEL TANK ENTRY PRECAUTIONS. FAILURE TO OBEY THE FUEL TANK ENTRY PRECAUTIONS CAN CAUSE INJURY OR DAMAGE.

(4) Obey the fuel tank entry precautions (AMM 28-11-00/201).

S 034-009

(5) Loosen the connector nut to remove the drain check valve.

S 024-010

(6) Remove the drain check valve.

TASK 28-21-05-404-011

3. Install the Drain Check Valve (Fig. 401)

A. References

(1) AMM 12-11-01/301, Fuel Tank Pressure Fueling
(2) AMM 28-11-00/201, Fuel Tank (Purging and Entry)
(3) AMM 28-11-02/401, Auxiliary Tank Access Door

B. Access

(1) Location Zones

531 Center Auxiliary Tank (Left)
631 Center Auxiliary Tank (Right)

(2) Access Panels

531BB Auxiliary Tank Access Door (Left)
631BB Auxiliary Tank Access Door (Right)

C. Procedure

S 014-003

WARNING: OBEY THE FUEL TANK ENTRY PRECAUTIONS. FAILURE TO OBEY THE FUEL TANK ENTRY PRECAUTIONS CAN CAUSE INJURY OR DAMAGE.

(1) Obey the fuel tank entry precautions (AMM 28-11-00/201).

S 424-012

(2) Install the drain check valve.

BOEING PROPRIETARY - Copyright (C) - Unpublished Work - See title page for details.

S 434-004
(3) Tighten the connector nut to the inlet port of the drain check valve.

S 434-005
(4) Install lockwire on the drain check valve.

S 414-013
(5) Install the fuel tank access door, 531BB or 631BB (AMM 28-11-02/401).

S 654-014
(6) Refuel the fuel tank (AMM 12-11-01/301).

S 214-015
(7) Make sure there are no fuel leaks.

BOEING PROPRIETARY - Copyright (C) - Unpublished Work - See title page for details.

SWING CHECK VALVE - REMOVAL/INSTALLATION

1. General
   A. There are two swing checks installed on the fueling manifold, inboard of rib 18 in the main fuel tanks.
   B. This procedure contains two tasks. The first task removes the swing check valve. The second task installs the swing check valve.

TASK 28-21-06-004-001

2. Remove the Swing Check Valve (Fig. 401)
   A. References
      (1) AMM 28-11-00/201, Fuel Tank (Purging and Entry)
      (2) AMM 28-11-01/401, Main Tank Access Door
      (3) AMM 28-26-00/201, Defueling
   B. Access
      (1) Location Zones
          541 Main Tank - Outboard of Rib No. 10 (Left)
          641 Main Tank - Outboard of Rib No. 10 (Right)

      (2) Access Panels
          541HB Main Tank Access Door (Left)
          641HB Main Tank Access Door (Right)

   C. Procedure

      S 654-002
      (1) Defuel the applicable fuel tank (AMM 28-26-00/201).

      S 014-019
      (2) Remove the applicable left or right main tank access door, 541HB or 641HB (AMM 28-11-01/401).

      S 654-000

      WARNING: OBEY THE FUEL TANK ENTRY PRECAUTIONS. FAILURE TO OBEY THE FUEL TANK ENTRY PRECAUTIONS CAN CAUSE INJURY OR DAMAGE.

      (3) Obey the fuel tank entry precautions (AMM 28-11-00/201).

BOEING PROPRIETARY - Copyright (C) - Unpublished Work - See title page for details.

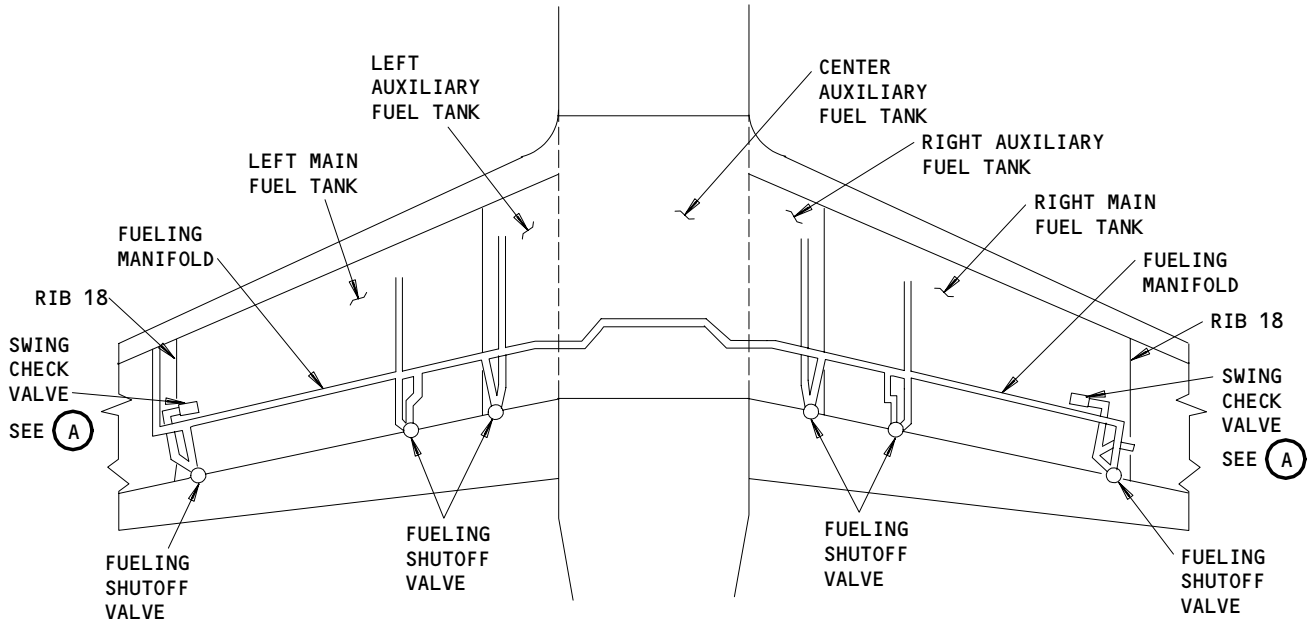

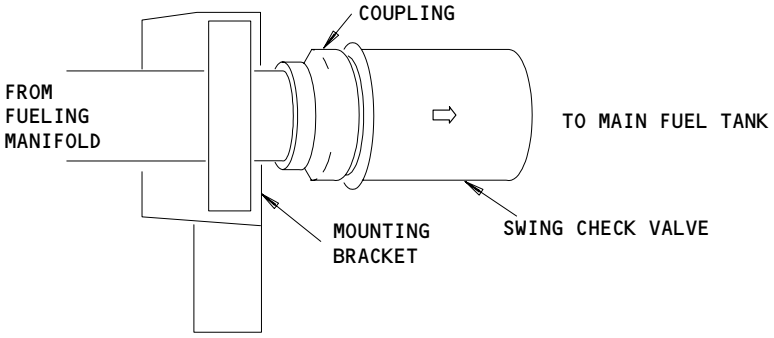

SWING CHECK VALVE
A

Swing Check Valve Installation
Figure 401

BOEING PROPRIETARY - Copyright (C) - Unpublished Work - See title page for details.

S 034-004
(4) Disconnect the bonding jumper from the swing check valve.

S 024-016
(5) Loosen the couplings on the swing check valve.

S 024-017
(6) Remove the swing check valve.

TASK 28-21-06-404-006
3. Install the Swing Check Valve (Fig. 401)
A. References
(1) AMM 12-11-01/301, Fuel Tank Pressure Fueling
(2) AMM 20-10-21/601, Electrical Bonding
(3) AMM 28-11-00/201, Fuel Tank (Purging and Entry)
(4) AMM 28-11-01/401, Main Tank Access Door
B. Access
(1) Location Zones
541 Main Tank - Outboard of Rib No. 10 (Left)
641 Main Tank - Outboard of Rib No. 10 (Right)

(2) Access Panels
541HB Main Tank Access Door (Left)
641HB Main Tank Access Door (Right)

C. Procedure

S 654-013

WARNING: OBEY THE FUEL TANK ENTRY PRECAUTIONS. FAILURE TO OBEY THE FUEL TANK ENTRY PRECAUTIONS CAN CAUSE INJURY OR DAMAGE.

(1) Obey the fuel tank entry precautions (AMM 28-11-00/201).

S 424-007
(2) Install the swing check valve.

BOEING PROPRIETARY - Copyright (C) - Unpublished Work - See title page for details.

S 424-008
(3) Connect the coupling to the swing check valve.

S 434-014
(4) Install lockwire on the coupling and the swing check valve.

S 434-009
(5) Install the bolt, washer and nut to connect the bonding jumpers to the swing check valve.

S 224-010
(6) Make sure the bonding resistance between the bonding jumper and the airplane structure is not more than 0.010 ohms (AMM 20-10-21/601).

S 414-017
(7) Install the applicable left or right main tank access door, 541HB or 641HB (AMM 28-11-01/401).

S 654-011
(8) Refuel the fuel tank (AMM 12-11-01/301).

S 214-015
(9) Make sure there are no fuel leaks.

BOEING PROPRIETARY - Copyright (C) - Unpublished Work - See title page for details.

FUELING MANIFOLD VACUUM VALVE - REMOVAL/INSTALLATION

1. General
   A. A vacuum valve lets air into the fueling manifold as it drains after refueling. It also does not let air into the fueling manifold during suction defueling.
   B. This procedure contains two tasks. The first task removes the vacuum valve of the fueling manifold. The second task installs the vacuum valve of the fueling manifold.

TASK 28-21-07-004-001

2. Remove the Vacuum Valve of the Fueling Manifold (Fig. 401)
   A. References
      (1) AMM 28-11-00/201, Fuel Tank
      (2) AMM 28-11-01/401, Main Tank Access Door
      (3) AMM 28-26-00/201, Defueling
   B. Access
      (1) Location Zone
          541 Main Tank - Outboard of Rib No. 10 (Left)

      (2) Access Panel
          541HB Main Tank Access Door (Left)

   C. Procedure

      S 654-016
      (1) Defuel the left main fuel tank (AMM 28-26-00/201).

      S 654-017
      (2) Drain and purge the left main fuel tank (AMM 28-11-00/201).

      S 014-002
      (3) Remove the left main tank access door, 541HB (AMM 28-11-01/401).

      S 944-018

      WARNING: OBEY THE FUEL TANK ENTRY PRECAUTIONS (AMM 28-11-00/201). FAILURE TO OBEY THE FUEL TANK ENTRY PRECAUTIONS COULD CAUSE INJURY TO PERSONS OR DAMAGE TO EQUIPMENT.

      (4) Obey the fuel tank entry precautions (AMM 28-11-00/201).

      S 024-005
      (5) Find the vacuum valve of the fueling manifold, aft and inboard of the main tank access door.

BOEING PROPRIETARY - Copyright (C) - Unpublished Work - See title page for details.

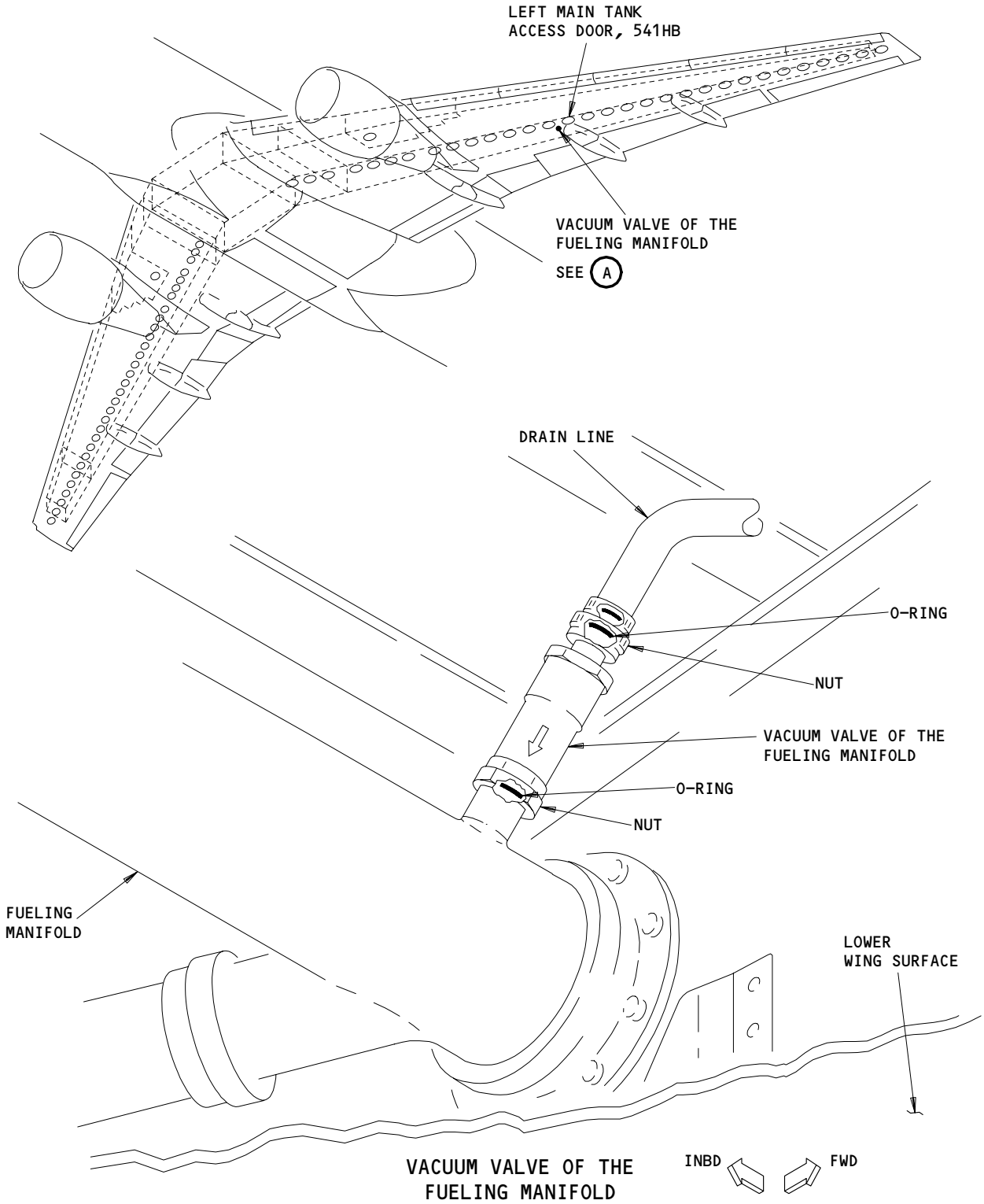

Fueling Manifold Vacuum Valve Installation
Figure 401

BOEING PROPRIETARY - Copyright (C) - Unpublished Work - See title page for details.

S 024-006
(6) Loosen the nuts at each end of the vacuum valve of the fueling manifold.

S 024-019
(7) Remove the vacuum valve of the fueling manifold.

S 034-020
(8) Discard the O-rings in the nuts.

TASK 28-21-07-404-007
3. Install the Vacuum Valve of the Fueling Manifold (Fig. 401)
A. References
(1) AMM 20-10-19/401, O-rings
(2) AMM 28-11-00/201, Fuel Tank
(3) AMM 28-11-01/401, Main Tank Access Door
B. Access
(1) Location Zone
541 Main Tank - Outboard of Rib No. 10 (Left)

(2) Access Panel
541HB Main Tank Access Door (Left)

C. Procedure

S 014-025

WARNING: OBEY THE FUEL TANK ENTRY PRECAUTIONS (AMM 28-11-00/201). FAILURE TO OBEY THE FUEL TANK ENTRY PRECAUTIONS COULD CAUSE INJURY TO PERSONS OR DAMAGE TO EQUIPMENT.

(1) Obey the fuel tank entry precautions (AMM 28-11-00/201).

S 014-027
(2) Go into the fuel tank.

BOEING PROPRIETARY - Copyright (C) - Unpublished Work - See title page for details.

S 914-008
(3) Install a new O-ring in each nut (AMM 20-10-19/401).

S 424-009
(4) Align the vacuum valve of the fueling manifold with the drain line.

S 214-022
(5) Make sure the arrow on the vacuum valve of the fueling manifold points down.

S 424-023
(6) Tighten the nut at each end of the vacuum valve of the fueling manifold.

S 414-010
(7) Install the left main tank access door, 541HB (AMM 28-11-01/401).

BOEING PROPRIETARY - Copyright (C) - Unpublished Work - See title page for details.

FUELING MANIFOLD PRESSURE RELIEF VALVE - REMOVAL/INSTALLATION

1. General
   A. A pressure relief valve attaches to the fueling manifold outboard of the outboard fueling shutoff valve in the right main fuel tank.
   B. MTH 276-999;
      SAS 050-149, 155-999;
      The fueling manifold is also used as the fuel jettison manifold.
   C. This procedure contains two tasks. The first task removes the pressure relief valve. The second task installs the pressure relief valve.

TASK 28-21-08-004-013

2. Remove the Pressure Relief Valve (Fig. 401)
   A. References
      (1) AMM 28-11-00/201, Fuel Tanks
      (2) AMM 28-11-01/401, Main Tank Access Door
   B. Access
      (1) Location Zone
          641 Main Tank - Outboard of Rib No. 10 (Right)

      (2) Access Panels
          641HB Main Tank Access Door (Right)
          641JB Main Tank Access Door (Right)

   C. Procedure

      S 654-014
      (1) Drain and purge the right main fuel tank (AMM 28-11-00/201).

      S 014-016
      (2) SAS 150-154;
          MTH 275;
          Remove the right main tank access door, 641HB (AMM 28-11-01/401).

      S 014-022
      (3) MTH 276-999;
          SAS 050-149, 155-999;
          Remove the right main tank access door, 641JB (AMM 28-11-01/401).

      S 944-047

      WARNING: OBEY THE FUEL TANK ENTRY PRECAUTIONS. FAILURE TO OBEY THE FUEL TANK ENTRY PRECAUTIONS COULD CAUSE INJURY TO PERSONS OR DAMAGE TO EQUIPMENT.

      (4) Obey the fuel tank entry precautions (AMM 28-11-00/201).

BOEING PROPRIETARY - Copyright (C) - Unpublished Work - See title page for details.

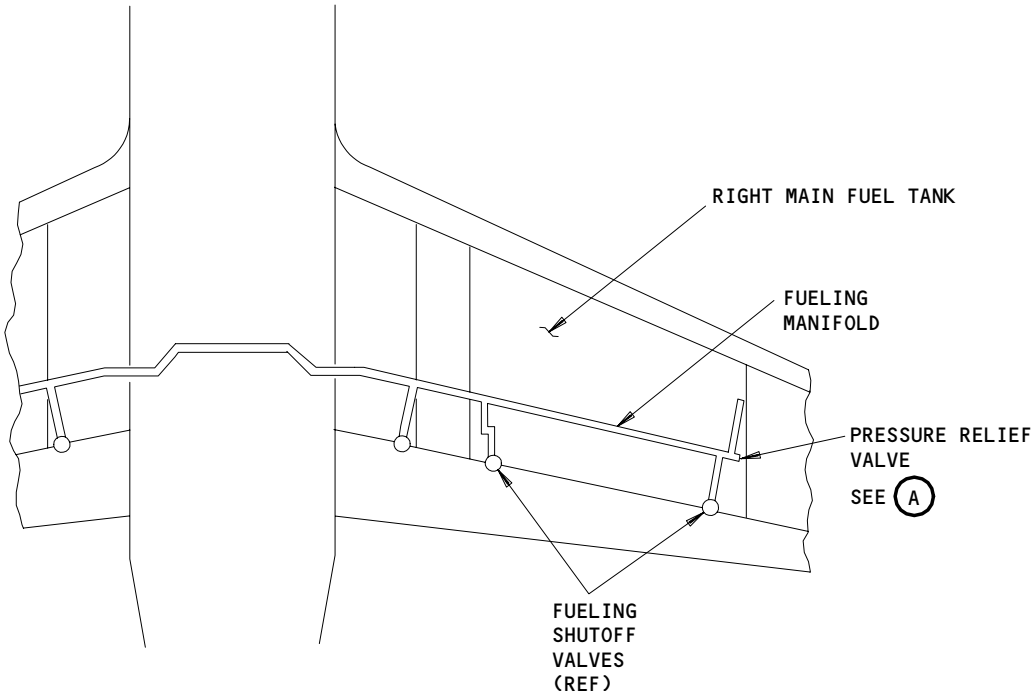

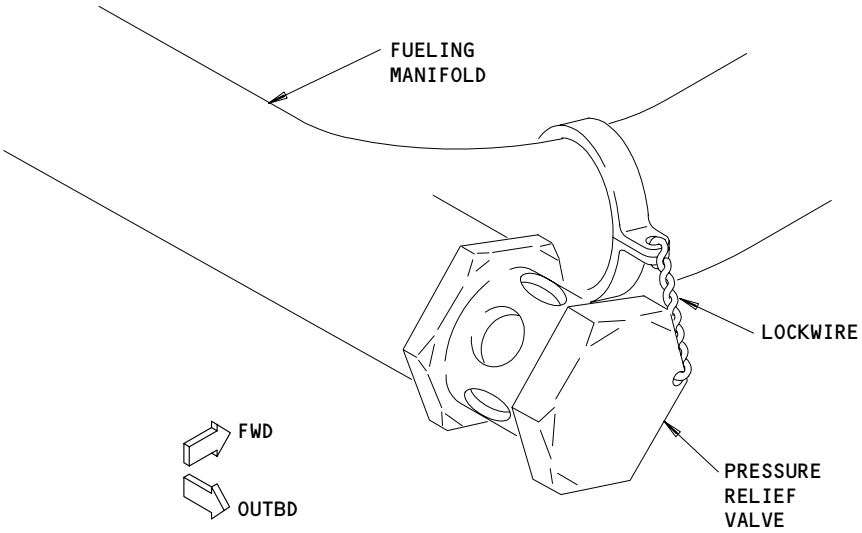

PRESSURE RELIEF VALVE

A

Fueling Manifold Pressure Relief Valve Installation
Figure 401 (Sheet 1)

BOEING PROPRIETARY - Copyright (C) - Unpublished Work - See title page for details.

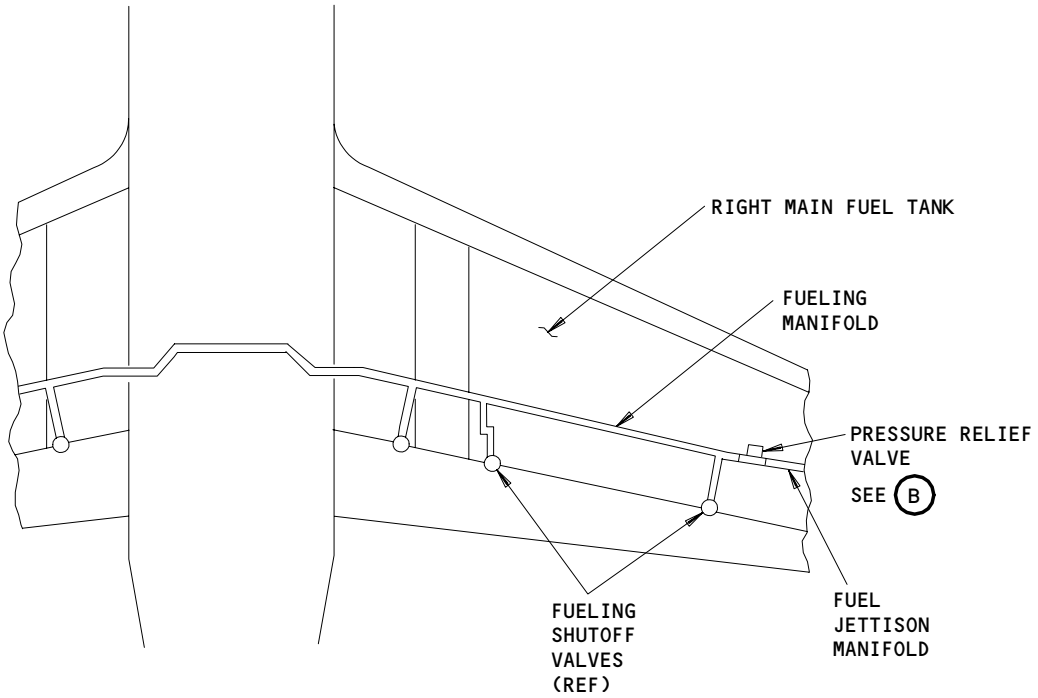

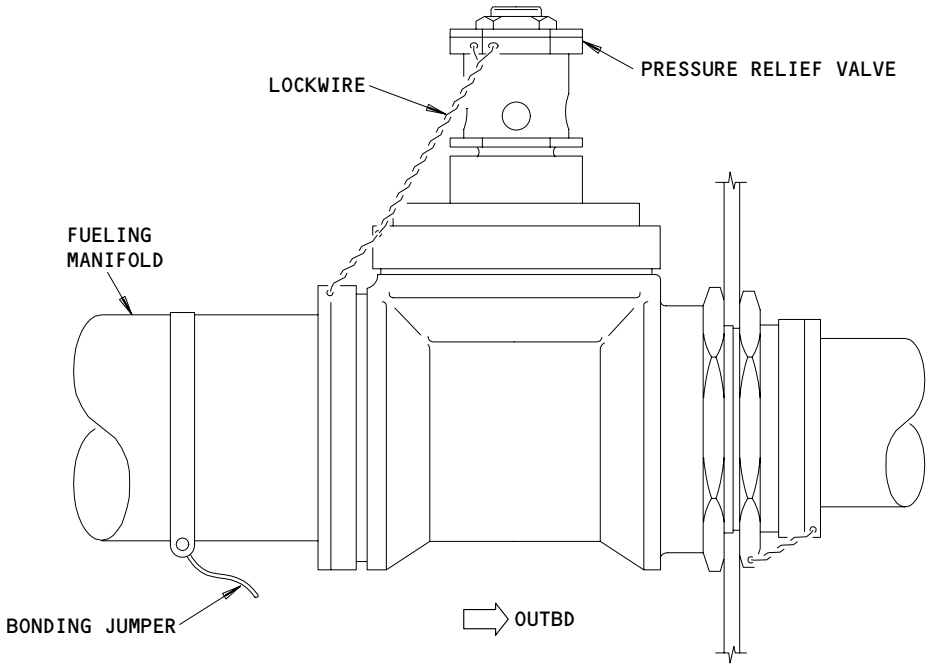

PRESSURE RELIEF VALVE

B

Fueling Manifold Pressure Relief Valve Installation
Figure 401 (Sheet 2)

BOEING PROPRIETARY - Copyright (C) - Unpublished Work - See title page for details.

S 014-010
(5) Go into the right main fuel tank.

S 034-027
(6) Remove the screw, washers, and the nut to disconnect the bonding jumper from the pressure relief valve.

S 024-028
(7) Remove the pressure relief valve from the fueling manifold.

S 494-029
(8) Put a plug on the end of the fueling manifold to keep unwanted materials out.

TASK 28-21-08-404-030

3. Install the Pressure Relief Valve (Fig. 401)

A. References
(1) AMM 28-11-00/201, Fuel Tanks
(2) AMM 28-11-01/401, Main Tank Access Door

B. Access
(1) Location Zone
641 Main Tank - Outboard of Rib No. 10 (Right)

(2) Access Panels
641HB Main Tank Access Door (Right)
641JB Main Tank Access Door (Right)

C. Procedure

S 944-048

WARNING: OBEY THE FUEL TANK ENTRY PRECAUTIONS. FAILURE TO OBEY THE FUEL TANK ENTRY PRECAUTIONS COULD CAUSE INJURY TO PERSONS OR DAMAGE TO EQUIPMENT.

(1) Obey the fuel tank entry precautions (AMM 28-11-00/201).

BOEING PROPRIETARY - Copyright (C) - Unpublished Work - See title page for details.

S 014-046
(2) Go into the right main fuel tank.

S 094-031
(3) Remove the plug from the fueling manifold.

S 424-032
(4) Use a new O-ring and install the pressure relief valve on the fueling manifold.

S 424-011
(5) Tighten the pressure relief valve to 216-264 pound-inches.

S 434-012
(6) Install lockwire on the pressure relief valve.

S 434-033
(7) Install the screw, two washers and the nut to connect the bonding jumper to the pressure relief valve.

S 414-035
(8) SAS 150-154;
MTH 275;
Install the right main tank access door, 641HB (AMM 28-11-01/401).

S 414-041
(9) MTH 276-999;
SAS 050-149, 155-999;
Install the right main tank access door, 641JB (AMM 28-11-01/401).

BOEING PROPRIETARY - Copyright (C) - Unpublished Work - See title page for details.

FUELING POWER CONTROL SWITCH - REMOVAL/INSTALLATION

1. General
   A. This procedure contains two tasks. The first task removes the fueling power control switch. The second task installs the fueling power control switch.

   TASK 28-21-09-004-013
2. Remove the Fueling Power Control Switch (Fig. 401)
   A. References
      (1) AMM 06-44-00/201, Wings - Access Doors and Panels
      (2) AMM 27-81-00/201, Leading Edge Slat System
   B. Access
      (1) Location Zone
          521 Leading Edge to Front Spar (Left)

      (2) Access Panel
          521QB Fueling Station Door (Left)

   C. Procedure

      S 864-031
      (1) Open this circuit breaker on the main power distribution panel, P6, and attach a DO-NOT-CLOSE tag:
          (a) 6E5, FUELING CONTROL

      S 864-032
      (2) Open this circuit breaker on the APU external power panel, P34, and attach a DO-NOT-CLOSE tag:
          (a) 34L3, FLNG CONT

      S 044-001

      WARNING: DO THE DEACTIVATION PROCEDURE FOR THE LEADING EDGE SLAT (AMM 27-81-00/201) OR MOVE ALL PERSONS AND EQUIPMENT AWAY FROM THE LEADING EDGE SLATS. THE SLATS CAN MOVE QUICKLY AND CAUSE INJURY OR DAMAGE.

      (3) Do the Deactivation of the Leading Edge Slats procedure (AMM 27-81-00/201).

      S 014-015
      (4) Open the fueling station door, 521QB (AMM 06-44-00/201).

      S 034-020
      (5) Disconnect the wiring leads of the fueling power control switch from the airplane wiring leads (View A-A).

      S 034-021
      (6) Remove the screws that attach the fueling power control switch to the bracket.

BOEING PROPRIETARY - Copyright (C) - Unpublished Work - See title page for details.

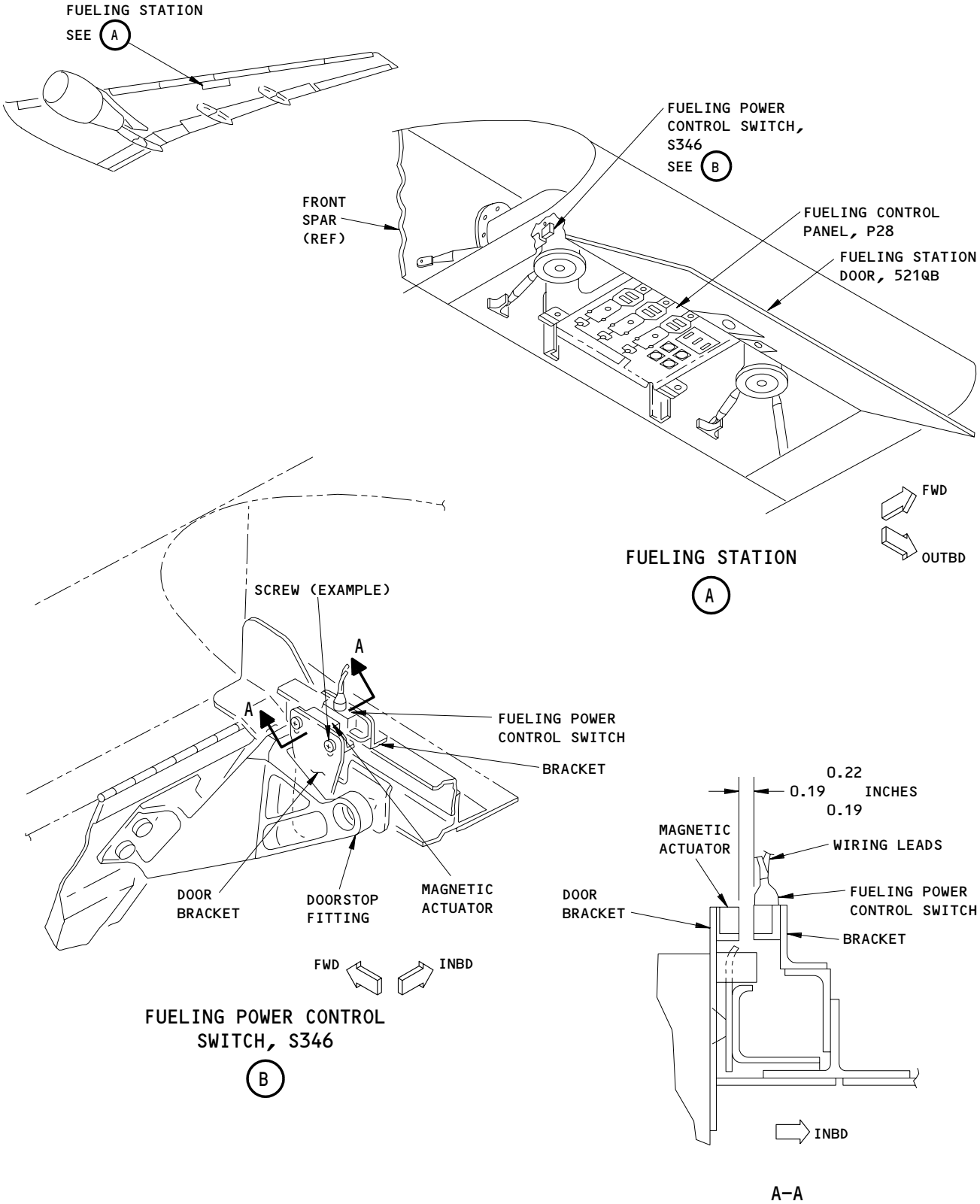

Fueling Power Control Switch Installation
Figure 401

BOEING PROPRIETARY - Copyright (C) - Unpublished Work - See title page for details.

S 024-005
(7) Remove the fueling power control switch.

TASK 28-21-09-424-033
3. Install the Fueling Power Control Switch (Fig. 401)
A. References
(1) AMM 06-44-00/201, Wings - Access Doors and Panels
(2) AMM 20-10-21/601, Electrical Bonding
(3) AMM 20-10-22/701, Metal Surfaces
(4) AMM 27-81-00/201, Leading Edge Slat System
B. Access
(1) Location Zone
521 Leading Edge to Front Spar (Left)

(2) Access Panel
521QB Fueling Station Door (Left)

C. Procedure

S 424-014
(1) Put the fueling power control switch in position on the bracket (View A-A).

S 434-006
(2) Install the screws to attach the fueling power control switch to the bracket.

S 434-029
(3) Connect the wiring leads of the fueling control switch to the airplane wiring leads.

S 214-030
(4) Make sure the magnetic actuator is installed on the bracket attached to the door stop fitting.

S 424-007
(5) If the magnetic actuator is not there, install a new magnetic actuator (View A-A):
(a) Remove the screws that attach the magnetic actuator to the door bracket if installed (View A-A).
(b) Clean the magnetic acutator and the faying surfaces of the door bracket (AMM 20-10-22/701).

BOEING PROPRIETARY - Copyright (C) - Unpublished Work - See title page for details.

(c) Put the magnetic actuator in position on the door bracket.
(d) Install the screws to attach the magnetic actuator to the door bracket.
(e) Align the magnetic actuator and the fueling control switch (View A-A).
(f) Make sure the bonding resistance between the magnetic actuator and the airplane structure is not more than 0.0025 ohms (AMM 20-10-21/601).

S 864-022
(6) Remove the DO-NOT-CLOSE tag and close this circuit breaker on the P6 panel:
(a) 6E5, FUELING CONTROL

S 864-023
(7) Remove the DO-NOT-CLOSE tag and close this circuit breaker on the P34 panel:
(a) 34L3, FLNG CONT

S 284-008
(8) Make sure the fueling power control switch operates correctly.
(a) Move the fueling station door from the not fully open positions to the full open position.
(b) Make sure the fueling panel lights come on when the fueling station door is in the full open position.

S 414-024
(9) Close the fueling station door, 521QB (AMM 06-44-00/201).

S 444-012

WARNING: DO THE ACTIVATION PROCEDURE FOR THE LEADING EDGE SLAT AND MOVE ALL PERSONS AND EQUIPMENT AWAY FROM THE LEADING EDGE SLATS. THE LEADING EDGE SLATS CAN MOVE QUICKLY AND CAUSE INJURY TO PERSONS OR DAMAGE TO EQUIPMENT.

(10) Do the Activation of the Leading Edge Slat procedure (AMM 27-81-00/201).

BOEING PROPRIETARY - Copyright (C) - Unpublished Work - See title page for details.

FUELING MANIFOLD AND COUPLINGS - REMOVAL/INSTALLATION

TASK 28-21-10-964-001

1. Fueling Manifold and Couplings Removal/Installation
   A. General
      (1) The removal/installation procedures for the fuel lines and couplings of the fueling manifold are almost the same as procedures for the fuel lines and couplings of the engine fuel feed system. Refer to AMM 28-22-07/401 for the removal/installation procedures.
      (2) After the fuel lines and couplings of the fueling manifold are installed, do a leak check with air pressure. Refer to AMM 28-22-07/601 for the pressure leak check procedure.

BOEING PROPRIETARY - Copyright (C) - Unpublished Work - See title page for details.

SURGE TANK SENSOR HARNESS - REMOVAL/INSTALLATION

1. General
   A. This procedure has two tasks:
      (1) A task to remove the surge tank sensor wire harness (referred to as "the wire harness") that goes to the fuel level sensor in the surge tank.
      (2) A task to install the wire harness.
      (3) Repair and overhaul of the surge tank sensor wire harness must be per SWPM 20-14-12.

      NOTE: CDCCL - Refer to the task: Airworthiness Limitation Precautions (AMM 28-00-00/201), for important information on Critical Design Configuration Control Limitations (CDCCLs).

      NOTE: This is applicable to Airworthiness Limitation 28-AWL-16.

TASK 28-21-11-024-002

2. Surge Tank Sensor Harness Removal
   A. References
      (1) AMM 28-11-00/201, Fuel Tanks
      (2) AMM 28-11-01/401, Main Tank Access Doors
      (3) AMM 28-11-02/401, Auxiliary Tank Access Doors
      (4) AMM 28-11-03/401, Surge Tank Access Doors
      (5) AMM 51-31-01/201, Seals and Sealing
   B. Access
      (1) Location Zones

133	Wing Center Section (Left)
134	Wing Center Section (Right)
531	Center Auxiliary Tank (Left)
532	Main Tank - Inboard of Rib No. 10 (Left)
541	Main Tank - Outboard of Rib No. 10 (Left)
542	Surge Tank (Left)
631	Center Auxiliary Tank (Right)
632	Main Tank - Inboard of Rib No. 10 (Right)
641	Main Tank - Outboard of Rib No. 10 (Right)
642	Surge Tank (Right)

      (2) Access Panels

552HB	Access Panel (Left)
652HB	Access Panel (Right)
542AB	Surge Tank Access Door (Left)
642AB	Surge Tank Access Door (Right)

   C. Prepare for the Wire Harness Removal

BOEING PROPRIETARY - Copyright (C) - Unpublished Work - See title page for details.

S 014-001

WARNING: OBEY THE FUEL TANK ENTRY PRECAUTIONS. FAILURE TO OBEY THE FUEL TANK ENTRY PRECAUTIONS CAN CAUSE INJURY OR DAMAGE.

(1) Do this task: "Fuel Tank Purging and Entry" for the applicable tank(s).

S 014-003
(2) Open the applicable surge tank access door (AMM 28-11-03/401).

S 014-004
(3) Open the necessary main tank access doors (AMM 28-11-01/401) to get access to the wire harness.

S 014-005
(4) Open the necessary auxiliary tank access doors (AMM 28-11-02/401) to get access to the wire harness.

D. Wire Harness Removal Procedure

S 034-006
(1) Disconnect the wires from the fuel level sensor in the surge tank (Fig. 401).

S 974-007
(2) Write the color codes of each sensor wire to use when you install the wire harness again.

S 034-008
(3) Release the wire harness from the clamps that hold it against the fuel level sensor and the airplane structure.

S 034-009
(4) Remove the snap ring and the seal rings that hold the wire harness to Rib No. 31.

S 034-010

CAUTION: DO NOT USE A SHARP OBJECT WHEN YOU REMOVE THE SEAL. DO NOT USE MORE FORCE THAN NECESSARY. DAMAGE TO THE SEAL SURFACE AROUND THE WIRE HARNESS CAN OCCUR.

(5) From the adjacent main fuel tank, carefully pull the seal fitting and the loose end of the wire harness through Rib No. 31 into the main fuel tank.

NOTE: If it is necessary, use a wooden or plastic tool to loosen the seal and remove the sealant (AMM 51-31-01/201).

BOEING PROPRIETARY - Copyright (C) - Unpublished Work - See title page for details.

S 154-011
(6) Remove the seal fitting from the wire harness.
(a) Remove as much of the sealant as possible from the wires.

S 034-012
(7) Loosen the clamps to release the wire harness from the structure of the main fuel tank.

S 034-013
(8) Continue to loosen the clamps that attach the wire harness to the structure in the main fuel tank.

S 034-014
(9) Remove the snap ring and the seal rings that hold the wire harness to Rib No. 18.

S 034-015
(10) From the inboard side of Rib No. 18, carefully pull the seal fitting and the loose end of the wire harness through the opening.

S 154-016
(11) Remove the seal fitting from the wire harness.
(a) Remove as much of the sealant as possible from the wires.

S 034-017
(12) Continue to loosen the clamps that attach the wire harness to the structure of the main tank.

S 034-018
(13) Remove the snap ring and the seal rings that hold the wire harness to Rib No. 3.

S 034-019
(14) From the inboard side of Rib No. 3, carefully pull the plastic seal fitting and the loose end of the wire harness through the opening.

S 034-020
(15) Continue to loosen the clamps that attach the wire harness to the structure in the auxiliary fuel tank.

BOEING PROPRIETARY - Copyright (C) - Unpublished Work - See title page for details.

S 034-076

(16) Disconnect the wire harness from the fuel seal assembly on the front spar immediately outboard of the side-of-body rib.

S 154-077

(17) Remove as much sealant as possible from the seal assembly.

TASK 28-21-11-424-032

3. Surge Tank Sensor Harness Installation

A. General

(1) CDCCL - Refer to the task: Airworthiness Limitation Precautions (AMM 28-00-00/201), for important information on Critical Design Configuration Control Limitations (CDCCLs).

NOTE: This is applicable to Airworthiness Limitation 28-AWL-16.

B. Equipment

(1) Gun - sealant

C. Consumable Materials

(1) A00767 Sealant - Integral Fuel Tank BMS 5-45

D. References

(1) AMM 28-11-00/201, Fuel Tanks
(2) AMM 28-11-01/401, Main Tank Access Doors
(3) AMM 28-11-02/401, Auxiliary Tank Access Doors
(4) AMM 28-11-03/401, Surge Tank Access Doors
(5) AMM 51-31-01/201, Seals and Sealing
(6) AIPC 28-21-03-01

E. Access

(1) Location Zones

133	Wing Center Section (Left)
134	Wing Center Section (Right)
531	Center Auxiliary Tank (Left)
532	Main Tank - Inboard of Rib No. 10 (Left)
541	Main Tank - Outboard of Rib No. 10 (Left)
542	Surge Tank (Left)
631	Center Auxiliary Tank (Right)
632	Main Tank - Inboard of Rib No. 10 (Right)
641	Main Tank - Outboard of Rib No. 10 (Right)
642	Surge Tank (Right)

(2) Access Panels

552HB	Access Panel (Left)
652HB	Access Panel (Right)
542AB	Surge Tank Access Door (Left)
642AB	Surge Tank Access Door (Right)

BOEING PROPRIETARY - Copyright (C) - Unpublished Work - See title page for details.

F. Surge Tank Harness Installation Procedure

S 014-033

WARNING: OBEY THE FUEL TANK ENTRY PRECAUTIONS. FAILURE TO OBEY THE FUEL TANK ENTRY PRECAUTIONS CAN CAUSE INJURY OR DAMAGE.

(1) Go into the auxiliary fuel tank.

S 434-078

(2) Connect the wire harness to the fuel seal assembly at the front spar immediately outboard of the side-of-body rib (Fig. 401).

S 394-079

(3) Seal the fitting in the front spar (AMM 51-31-01/201).

NOTE: Seal with BMS 5-45 Class B or an equivalent sealant approved to use in a fuel tank.

S 434-049

(4) Loosely attach the wire harness to the structure of the auxiliary fuel tank with the applicable clamps.

S 434-050

(5) Put the plastic seal fitting (3) in its position in the opening in Rib No. 3.

S 434-051

(6) From the outboard side of Rib No. 3, install the seal rings (4 and 5) and the snap ring (6) on the plastic seal fitting (3).

NOTE: Install the necessary number of seal rings to fill the space between the plastic seal fitting and the structure.

BOEING PROPRIETARY - Copyright (C) - Unpublished Work - See title page for details.

S 434-052
(7) Put the loose end of the wire harness through the plastic seal fitting (3).

S 434-053
(8) Tighten the wire harness between each clamp to make sure there is no loose wire between each clamp.

S 434-054
(9) When the wire harness has a good fit, tighten the clamps inboard of Rib No. 3.

S 394-055
(10) Seal the fitting in Rib No. 3 (AMM 51-31-01/201).

S 434-056
(11) Loosely attach the wire harness to the structure of the main fuel tank from Rib No. 3 to Rib No. 18 with the applicable clamps.

S 434-057
(12) Put the plastic seal fitting (3) in its position in the opening in Rib No. 18.

S 434-058
(13) From the outboard side of Rib No. 18, install the seal rings (4 and 5) and the snap ring (6) on the plastic seal fitting (3).

NOTE: Install the necessary number of seal rings to fill the space between the plastic seal fitting and the structure.

S 434-059
(14) Put the loose end of the wire harness through the plastic seal.

S 434-060
(15) Tighten the wire harness between each clamp to make sure there is no loose wire between each clamp.

BOEING PROPRIETARY - Copyright (C) - Unpublished Work - See title page for details.

S 434-061
(16) When the wire harness has a good fit, tighten the clamps inboard of Rib No. 18.

S 394-062
(17) Seal the fitting in Rib No. 18 (AMM 51-31-01/201).

S 434-063
(18) Loosely attach the wire harness to the structure of the main fuel tank from Rib No. 18 to Rib No. 31 with the applicable clamps.

S 434-064
(19) Put the plastic seal fitting (3) in its position in the opening in Rib No. 31.

S 434-065
(20) In the surge tank, install the seal rings (4 and 5) and the snap ring (6) on the plastic seal fitting (3) in Rib No. 31.

NOTE: Install the necessary number of seal rings to fill the space between the plastic seal fitting and the structure.

S 434-066
(21) Put the loose end of the wire harness through the plastic seal fitting.

S 434-067
(22) Tighten the wire harness between each clamp to make sure there is no loose wire between each clamp.

S 434-068
(23) When the wire harness has a good fit, tighten the clamps inboard of Rib No. 31.

BOEING PROPRIETARY - Copyright (C) - Unpublished Work - See title page for details.

S 394-069
(24) Seal the fitting in Rib No. 31 (AMM 51-31-01/201).

S 434-070
(25) In the surge tank, attach the wire harness to Rib No. 31 with the applicable clamps.

S 434-071
(26) Connect the three wires (white, green, and yellow) to the fuel level sensor (Fig. 401).

G. Put the Airplane Back to Its Usual Condition

S 414-072
(1) Install the access door to the surge tank (AMM 28-11-03/401).

S 414-073
(2) Install the fuel tank access doors that you removed before (AMM 28-11-01/401, AMM 28-11-02/401).

S 654-074
(3) Refuel the fuel tanks (AMM 12-11-01/301).

S 794-075
(4) Do a check for fuel leaks.

BOEING PROPRIETARY - Copyright (C) - Unpublished Work - See title page for details.

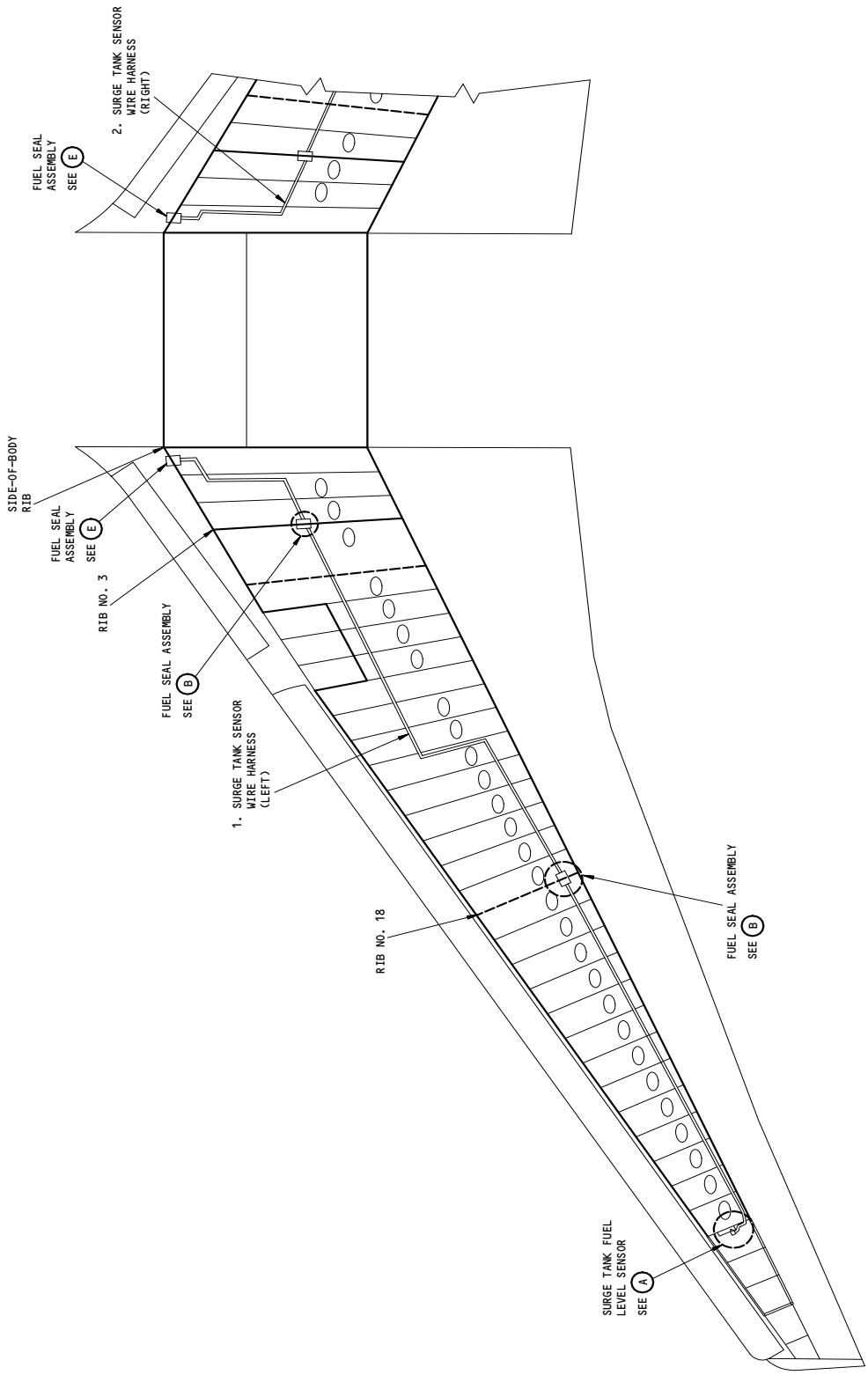

Surge Tank Sensor Wire Harness Installation
Figure 401 (Sheet 1)

A96150

BOEING PROPRIETARY - Copyright (C) - Unpublished Work - See title page for details.

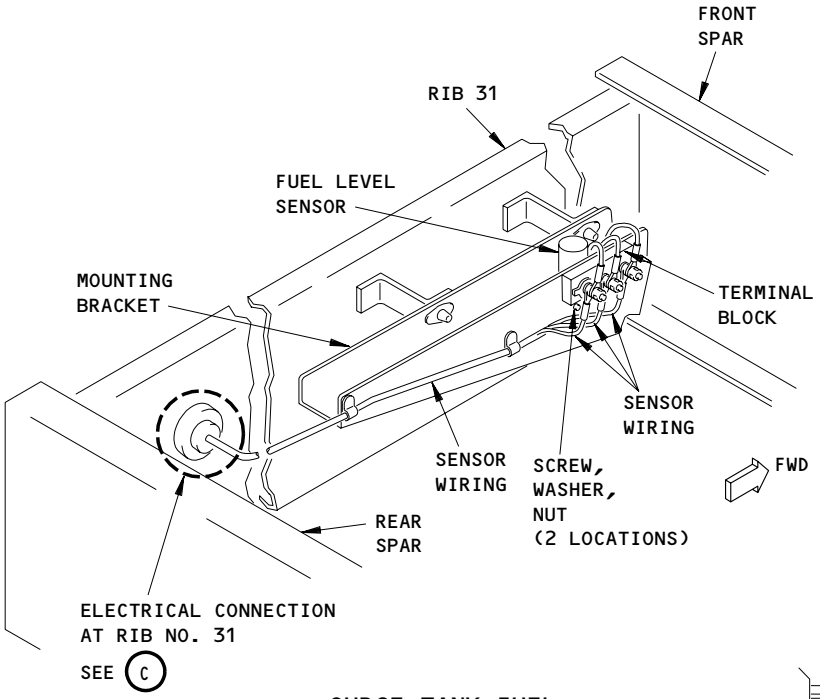

SURGE TANK FUEL LEVEL SENSOR

A

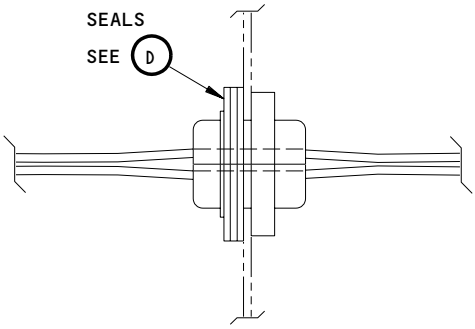

FUEL SEAL ASSEMBLY

B

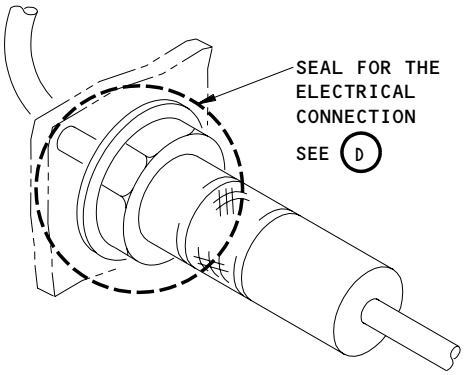

ELECTRICAL CONNECTION AT RIB NO. 31

C

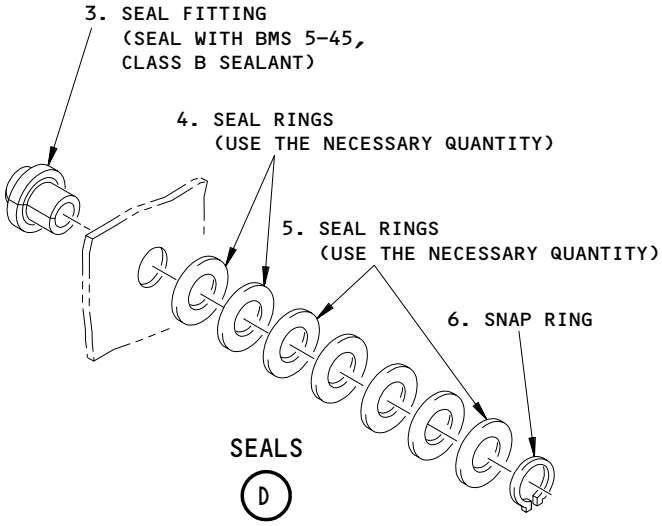

SEALS

D

Surge Tank Sensor Wire Harness Installation
Figure 401 (Sheet 2)

BOEING PROPRIETARY - Copyright (C) - Unpublished Work - See title page for details.

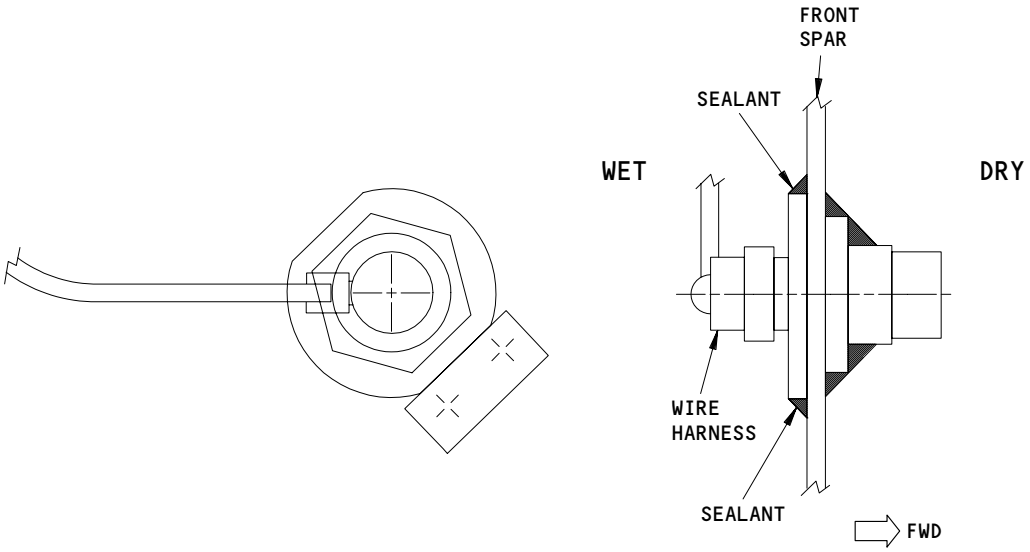

FUEL SEAL ASSEMBLY
(FRONT SPAR)

E

Surge Tank Sensor Wire Harness Installation
Figure 401 (Sheet 3)

BOEING PROPRIETARY - Copyright (C) - Unpublished Work - See title page for details.

FUELING SHUTOFF VALVE CONTROL UNIT - REMOVAL/INSTALLATION

1. General
   A. There are three fueling shutoff valves installed on the rear spar of each wing. The fueling shutoff valve is installed on the rear spar in the fuel tank. The control unit of the fueling shutoff valve is installed on the rear spar out of the fuel tank, and can be removed without defueling the fuel tank.
   B. This procedure contains two tasks. The first task removes the control unit of the fueling shutoff valve. The second task installs the control unit of the fueling shutoff valve.

TASK 28-21-12-004-001

2. Remove the Control Unit of the Fueling Shutoff Valve (Fig. 401)
   A. References
      (1) AMM 06-44-00/201, Wing Access Doors and Panels
      (2) AMM 27-51-00/201, Flight Controls
      (3) AMM 32-00-15/201, Landing Gear Door Locks
      (4) AMM 32-00-20/201, Landing Gear Downlocks
   B. Access
      (1) Location Zones
          551 Rear Spar to MLG Support Beam (Left)
          561 Rear Spar to Trailing Edge (Left)
          651 Rear Spar to MLG Support Beam (Right)
          661 Rear Spar to Trailing Edge (Right)

      (2) Access Panels
          551TB Lower Wing Structure Panel (Left)
          561FB Wing Trailing Edge Structure Panel (Left)
          651TB Lower Wing Structure Panel (Right)
          661FB Wing Trailing Edge Structure Panel (Right)

   C. Procedure

      S 864-002

      WARNING: DO THE DEACTIVATION OF THE FLAP SYSTEM PROCEDURE. FAILURE TO DO THE DEACTIVATION OF THE FLAP SYSTEM PROCEDURE COULD CAUSE INJURY OR DAMAGE.

      (1) Do the deactivation of the flap system procedure for the trailing edge flaps (AMM 27-51-00/201).

      S 864-011
      (2) Open this circuit breaker on the APU external power panel, P34, and attach DO-NOT-CLOSE tag:
          (a) 34L5, FLNG VALVES

BOEING PROPRIETARY - Copyright (C) - Unpublished Work - See title page for details.

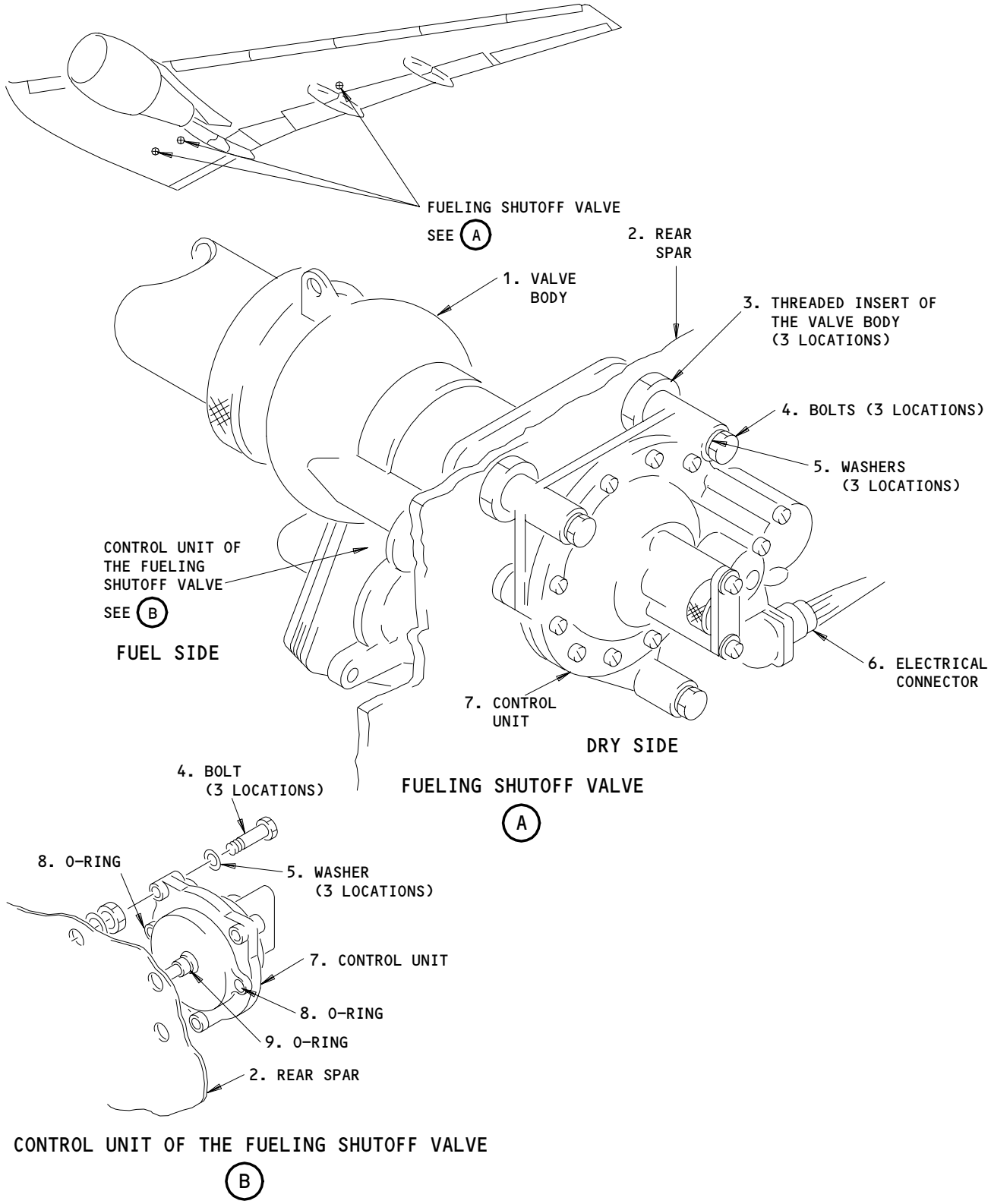

Fueling Shutoff Valve Control Unit Installation
Figure 401

BOEING PROPRIETARY - Copyright (C) - Unpublished Work - See title page for details.

S 864-012
(3) Open this circuit breaker on the main power distribution panel, P6, and attach DO-NOT-CLOSE tag:
(a) 6E6, FUELING VALVES

S 014-013
(4) To get access to the control unit in the left or right auxiliary fuel tank, do the steps that follow:
(a) Make sure the downlocks for the nose and main landing gear are installed (AMM 32-00-20/201).

WARNING: REFER TO AMM 32-00-15/201 FOR DOOR LOCK INSTALLATION PROCEDURE. IF THE MAIN GEAR DOORS MOVE QUICKLY, INJURY OR DAMAGE CAN OCCUR.

(b) Open the applicable left or right main gear door and install the door lock (AMM 32-00-15/201).

S 014-014
(5) For the control unit in the left inboard main fuel tank, open the skin panel, 551TB (AMM 06-44-00/201).

S 014-015
(6) For the control unit in the right inboard main fuel tank, open the skin panel, 651TB (AMM 06-44-00/201).

S 014-016
(7) For the control unit in the left outboard main fuel tank, open the skin panel, 561FB (AMM 06-44-00/201).

S 014-017
(8) For the control unit in the right outboard main fuel tank, open the skin panel, 661FB (AMM 06-44-00/201).

S 034-018
(9) Disconnect the electrical connector (6) from the control unit (7).

S 024-020
(10) Remove the bolts (4) and the washers (5) that attach the control unit (7) to the valve body (1).

BOEING PROPRIETARY - Copyright (C) - Unpublished Work - See title page for details.

S 024-019
(11) Remove the control unit (7).

NOTE: If fuel leaks from the valve body (1) when the control unit (7) is removed, then the removal check valve has failed and the fueling shutoff valve must be replaced (AMM 28-21-02/401).

TASK 28-21-12-404-021

3. Install the Control Unit of the Fueling Shutoff Valve (Fig. 401)

A. References
(1) AMM 06-44-00/201, Wing Access Doors and Panels
(2) AMM 12-11-01/301, Fuel Tank Pressure Fueling
(3) AMM 32-00-15/201, Landing Gear Door Locks

B. Access
(1) Location Zones
551 Rear Spar to MLG Support Beam (Left)
561 Rear Spar to Trailing Edge (Left)
651 Rear Spar to MLG Support Beam (Right)
661 Rear Spar to Trailing Edge (Right)

(2) Access Panels
551TB Lower Wing Structure Panel (Left)
561FB Wing Trailing Edge Structure Panel (Left)
651TB Lower Wing Structure Panel (Right)
661FB Wing Trailing Edge Structure Panel (Right)

C. Procedure

S 424-022
(1) Align the control unit (7) with the threaded inserts of the valve body (3).

S 214-003
(2) Make sure the three O-rings (8, 9) are installed as shown (View B, Fig. 401).

BOEING PROPRIETARY - Copyright (C) - Unpublished Work - See title page for details.

S 434-004
(3) Put washers (5) on the bolts (4).

S 424-005
(4) Install the bolts (4) through the control unit (7) into the threaded inserts of the valve body (3).

S 764-034
(5) Make sure the bonding resistance between the control unit (7) and the rear spar (2) is 0.008 ohm (8 milliohms) or less.

S 434-023
(6) Connect the electrical connector (6) to the control unit (7).

S 864-024
(7) Remove the DO-NOT-CLOSE tag and close this circuit breaker on the P34 panel:
(a) 34L5, FLNG VALVES

S 864-025
(8) Remove the DO-NOT-CLOSE tag and close this circuit breaker on the P6 panel:
(a) 6E6, FUELING VALVES

S 654-026
(9) Refuel the applicable fuel tank (AMM 12-11-01/301) and make sure the fueling shutoff valve operates correctly.

S 214-027
(10) Make sure there are no fuel leaks at the control unit of the fueling shutoff valve.

S 414-006
(11) For the control unit in the left inboard main fuel tank, close the skin panel, 551TB (AMM 06-44-00/201).

S 414-007
(12) For the control unit in the right inboard main fuel tank, close the skin panel 651TB (AMM 06-44-00/201).

S 414-008
(13) For the control unit in the left outboard main fuel tank, close the skin panel, 561FB (AMM 06-44-00/201).

BOEING PROPRIETARY - Copyright (C) - Unpublished Work - See title page for details.

S 414-009

(14) For the control unit in the right outboard main fuel tank, close the skin panel, 661FB (AMM 06-44-00/201).

S 864-010

WARNING: USE THE PROCEDURE IN AMM 32-00-15/201 TO REMOVE THE DOOR LOCKS. THE DOORS OPEN AND CLOSE QUICKLY AND CAN CAUSE INJURY TO PERSONS OR DAMAGE TO EQUIPMENT.

(15) For the control unit in the left or right auxiliary fuel tank, remove the door locks from the main gear doors and close the doors (AMM 32-00-15/201).

BOEING PROPRIETARY - Copyright (C) - Unpublished Work - See title page for details.

FUELING SHUTOFF VALVE CONTROL UNIT - INSPECTION/CHECK

TASK 28-21-12-006-001

1. Fueling Shutoff Valve - Bonding Resistance Check (Fig. 601)
   A. References
      (1) AMM 06-44-00/201, Wing Access Doors and Panels
      (2) AMM 27-51-00/201, Flight Controls
      (3) AMM 32-00-15/201, Landing Gear Door Locks
      (4) AMM 32-00-20/201, Landing Gear Downlocks
      (5) SWPM 20-20-00, Electrical Bonds and Grounds
   B. Equipment
      (1) Bonding Meter - Use one of these:
         (a) Bonding Meter - T477W
             Avtron Manufacturing Co.
             Cleveland, OH
         (b) Bonding Meter - Model M1
             (Serial Number A000012 and subsequent)
             BCD Electronics Ltd.
             Vancouver, Canada
   C. Access
      (1) Location Zones
          551 Rear Spar to MLG Support Beam (Left)
          561 Rear Spar to Trailing Edge (Left)
          651 Rear Spar to MLG Support Beam (Right)
          661 Rear Spar to Trailing Edge (Right)

      (2) Access Panels
          551TB Lower Wing Structure Panel (Left)
          561FB Wing Trailing Edge Structure Panel (Left)
          651TB Lower Wing Structure Panel (Right)
          661FB Wing Trailing Edge Structure Panel (Right)

   D. Prepare for the Procedure

      S 866-002

      WARNING: DO THE DEACTIVATION OF THE FLAP SYSTEM PROCEDURE. FAILURE TO DO THE DEACTIVATION OF THE FLAP SYSTEM PROCEDURE COULD CAUSE INJURY OR DAMAGE.

      (1) Do the deactivation of the flap system procedure for the trailing edge flaps (AMM 27-51-00/201).

      S 866-003
      (2) Open this circuit breaker on the APU external power panel, P34, and attach DO-NOT-CLOSE tag:
         (a) 34L5, FLNG VALVES

BOEING PROPRIETARY - Copyright (C) - Unpublished Work - See title page for details.

S 866-004
(3) Open this circuit breaker on the main power distribution panel, P6, and attach DO-NOT-CLOSE tag:
(a) 6E6, FUELING VALVES

S 016-005
(4) To get access to the control unit in the left or right auxiliary fuel tank, do the steps that follow:
(a) Make sure the downlocks for the nose and main landing gear are installed (AMM 32-00-20/201).

WARNING: REFER TO AMM 32-00-15/201 FOR DOOR LOCK INSTALLATION PROCEDURE. IF THE MAIN GEAR DOORS MOVE QUICKLY, INJURY OR DAMAGE CAN OCCUR.

(b) Open the applicable left or right main gear door and install the door lock (AMM 32-00-15/201).

S 016-006
(5) For the control unit in the left inboard main fuel tank, open the skin panel, 551TB (AMM 06-44-00/201).

S 016-007
(6) For the control unit in the right inboard main fuel tank, open the skin panel, 651TB (AMM 06-44-00/201).

S 016-008
(7) For the control unit in the left outboard main fuel tank, open the skin panel, 561FB (AMM 06-44-00/201).

S 016-009
(8) For the control unit in the right outboard main fuel tank, open the skin panel, 661FB (AMM 06-44-00/201).

S 036-010
(9) Disconnect the electrical connector from the control unit.

E. Electrical Bonding Measurement

S 766-042
(1) Measure the electrical bonding resistance between the fueling shutoff valve control unit and the rear spar (SWPM 20-20-00).
(a) Make sure the electrical bonding resistance is 0.008 ohm (8 milliohms) or less.

F. Put the Airplane Back to Its Usual Condition

S 436-032
(1) Connect the electrical connector to the control unit.

BOEING PROPRIETARY - Copyright (C) - Unpublished Work - See title page for details.

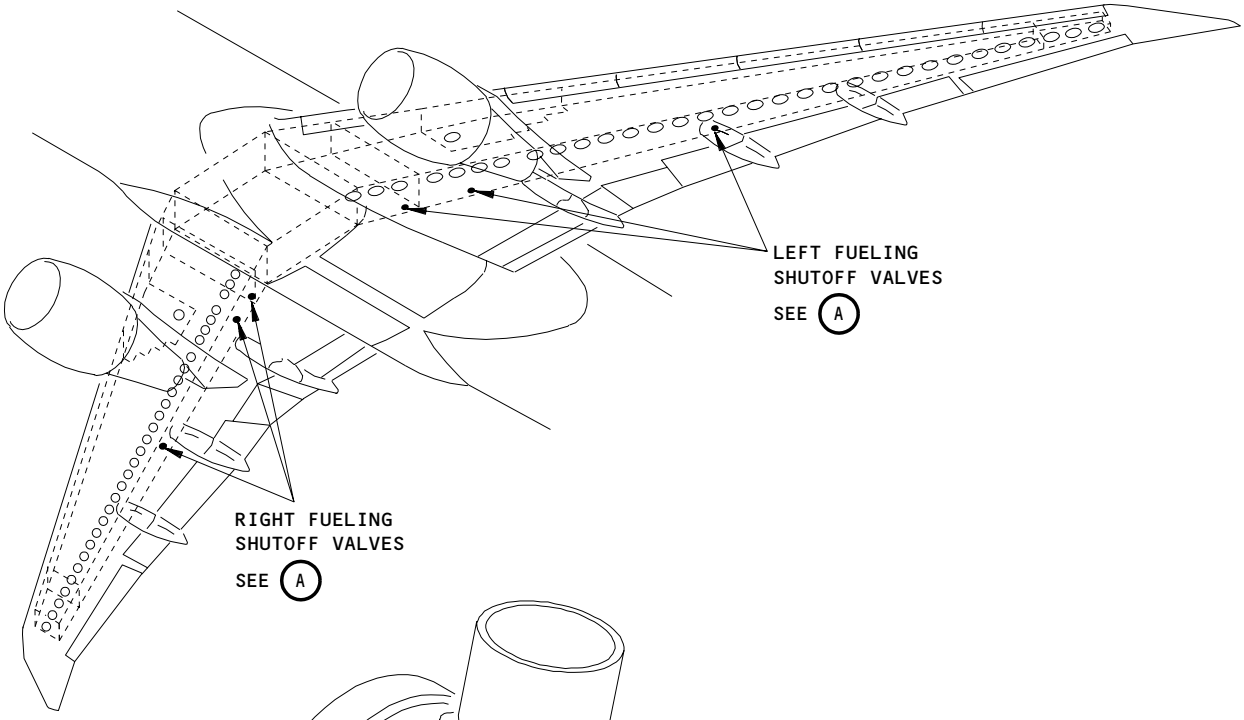

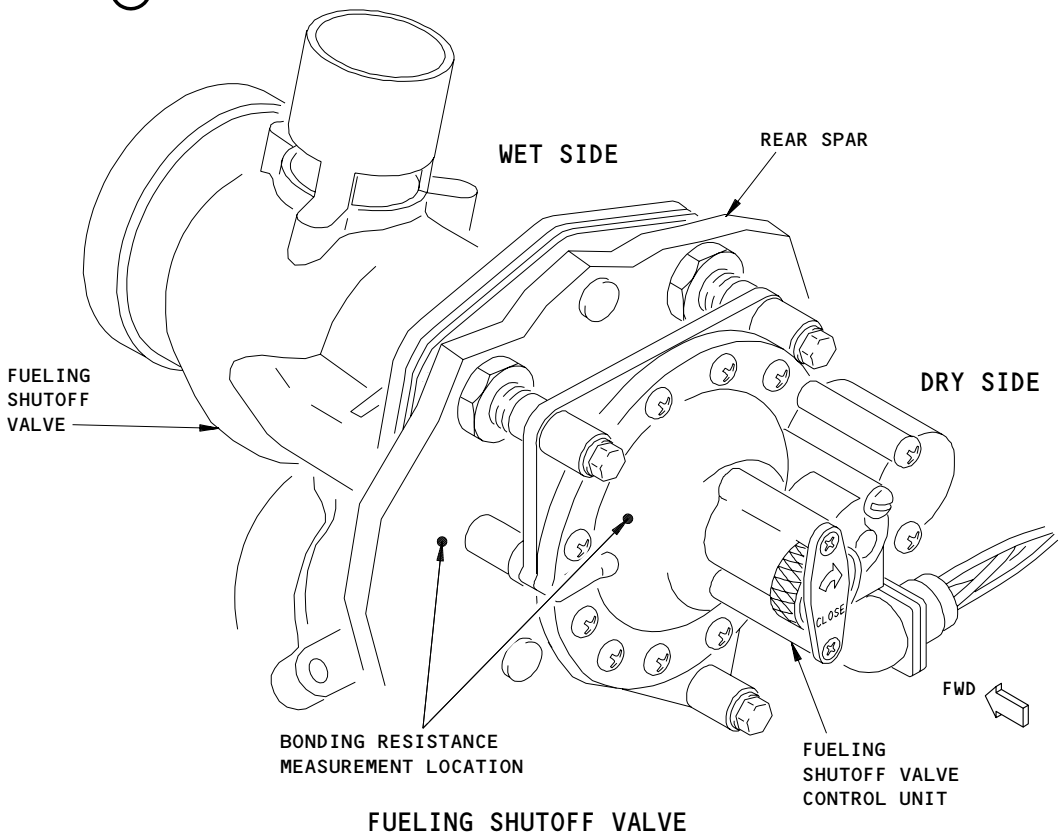

FUELING SHUTOFF VALVE
(EXAMPLE)

A

Fueling Shutoff Valve Control Unit Inspection
Figure 601

BOEING PROPRIETARY - Copyright (C) - Unpublished Work - See title page for details.

S 866-033
(2) Remove the DO-NOT-CLOSE tag and close this circuit breaker on the P34 panel:
(a) 34L5, FLNG VALVES

S 866-034
(3) Remove the DO-NOT-CLOSE tag and close this circuit breaker on the P6 panel:
(a) 6E6, FUELING VALVES

S 656-035
(4) Refuel the applicable fuel tank (AMM 12-11-01/301) and make sure the fueling shutoff valve operates correctly.

S 216-036
(5) Make sure there are no fuel leaks at the control unit of the fueling shutoff valve.

S 416-037
(6) For the control unit in the left inboard main fuel tank, close the skin panel, 551TB (AMM 06-44-00/201).

S 416-038
(7) For the control unit in the right inboard main fuel tank, close the skin panel 651TB (AMM 06-44-00/201).

S 416-039
(8) For the control unit in the left outboard main fuel tank, close the skin panel, 561FB (AMM 06-44-00/201).

S 416-040
(9) For the control unit in the right outboard main fuel tank, close the skin panel, 661FB (AMM 06-44-00/201).

S 866-041

WARNING: USE THE PROCEDURE IN AMM 32-00-15/201 TO REMOVE THE DOOR LOCKS. THE DOORS OPEN AND CLOSE QUICKLY AND CAN CAUSE INJURY TO PERSONS OR DAMAGE TO EQUIPMENT.

(10) For the control unit in the left or right auxiliary fuel tank, remove the door locks from the main gear doors and close the doors (AMM 32-00-15/201).

BOEING PROPRIETARY - Copyright (C) - Unpublished Work - See title page for details.

FUELING CONTROL PANEL - REMOVAL/INSTALLATION

1. General
   A. The fueling control panel is found between the two fueling adapters. The fueling control panel contains switches and (ESDS) indicators for fueling and defueling operations.
   B. This procedure contains two tasks. The first task removes the fueling control panel. The second task installs the fueling control panel.

TASK 28-21-13-004-001

2. Remove the Fueling Control Panel (Fig. 401)
   A. References
      (1) AMM 06-44-00/201, Wing Access Doors and Panels
      (2) AMM 20-41-01/201, Electrostatic Discharge Sensitive Devices
      (3) AMM 27-81-00/201, Leading Edge Slat System
   B. Access
      (1) Location Zones
          521 Leading Edge to Front Spar (Left)

      (2) Access Panels
          521QB Fueling Station Door (Left)

   C. Procedure

S 024-060

WARNING: WHEN YOU REMOVE AN ELECTROSTATIC DISCHARGE SENSITIVE (ESDS) UNIT, MAKE SURE YOU PUT COVERS ON THE ELECTRICAL CONNECTORS. USE ELECTROSTATIC DISCHARGE (ESD) SAFE DUST CAPS. IF THE CONNECTORS DO NOT HAVE COVERS ON THEM, INJURY TO PERSONS AND DAMAGE TO THE CONNECTOR CAN OCCUR.

CAUTION: YOU MUST CAREFULLY DO THE STEPS IN THE TASK BELOW TO REMOVE THE FUELING CONTROL PANEL. A FAILURE TO DO THE STEPS CORRECTLY CAN CAUSE DAMAGE TO THE EQUIPMENT.

(1) Do the "Removal of ESDS Metal Encased Units" task to remove the fueling control panel (AMM 20-41-01/201).

S 864-063

(2) Open these circuit breakers on the main power distribution panel, P6, and attach DO-NOT-CLOSE tags:
    (a) 6E5, FUELING CONTROL
    (b) 6E6, FUELING VALVES

BOEING PROPRIETARY - Copyright (C) - Unpublished Work - See title page for details.

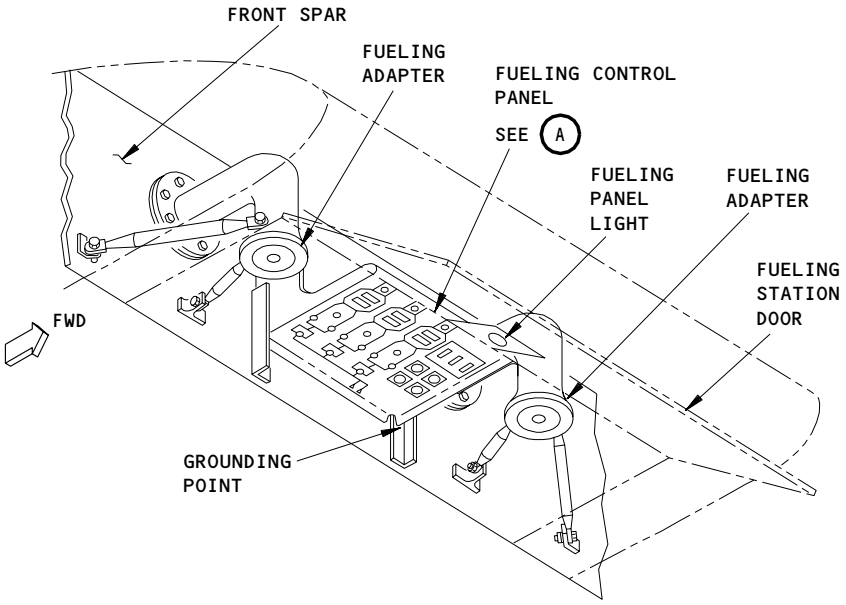

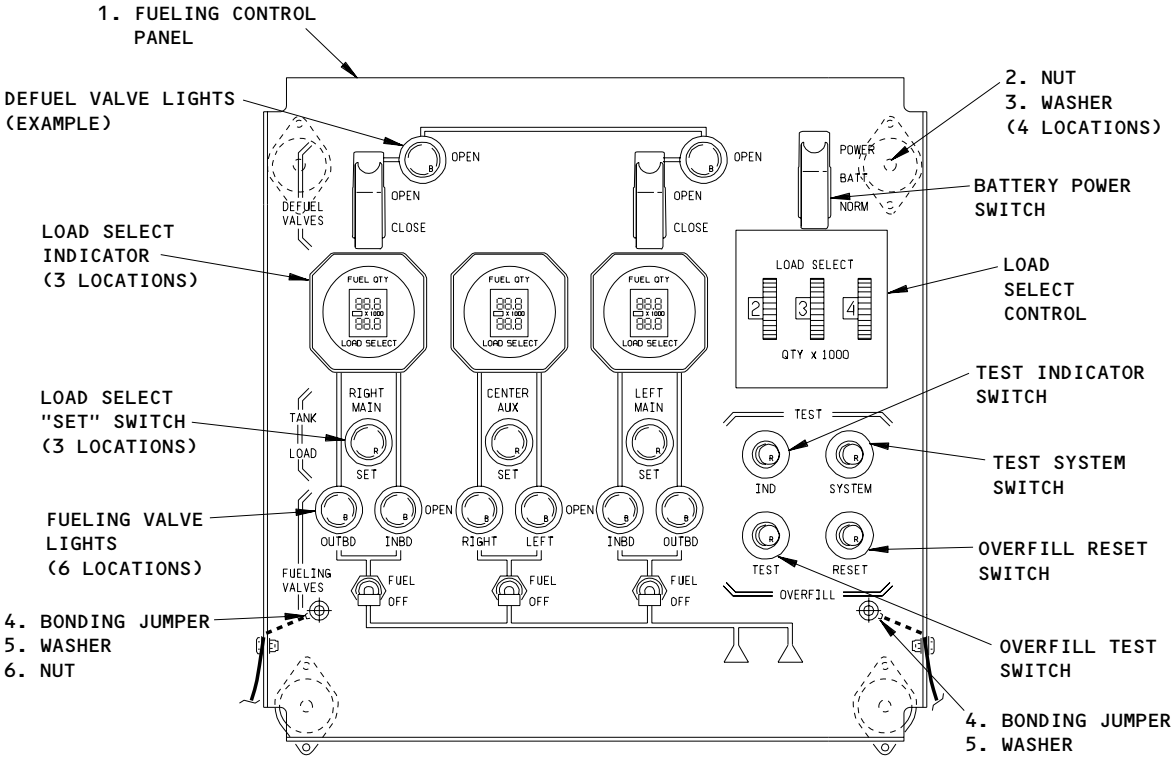

FUELING CONTROL PANEL

A

Fueling Control Panel - Installation
Figure 401

BOEING PROPRIETARY - Copyright (C) - Unpublished Work - See title page for details.

S 864-003
(3) Open these circuit breakers on the overhead circuit breaker panel, P11, and attach DO-NOT-CLOSE tags:
(a) 11C34, FUEL QTY 1
(b) 11M19, FUEL QTY 2

S 864-004
(4) Open these circuit breakers on the APU external power panel, P34, and attach DO-NOT-CLOSE tags:
(a) 34L2, FUEL QTY REFUEL
(b) 34L5, FLNG VALVES

S 864-005

WARNING: DO THE DEACTIVATION PROCEDURE FOR THE LEADING EDGE SLATS. THE ACCIDENTAL MOVEMENT OF THE SLATS CAN CAUSE INJURY TO PERSONS AND DAMAGE TO EQUIPMENT.

(5) Do the deactivation procedure for the leading edge slats (AMM 27-81-00/201).

S 014-052
(6) Open the fueling station door, 521QB (AMM 06-44-00/201).

S 034-007
(7) Remove the nuts and washers that attach the fueling control panel to the bracket.

S 024-009
(8) Carefully lower the fueling control panel to get access to the electrical connectors on the indicators, lights and switches.

S 034-010
(9) Disconnect all the electrical connectors.

S 934-011
(10) Attach tags to the electrical connections to make the installation of the fueling control panel easier.

S 034-012
(11) Remove the wire bundle from the track and the wires from the holes in the bracket.

S 934-013
(12) Attach tags to the wires and wire bundle to make the installation of the fueling control panel easier.

S 034-014
(13) Remove the nuts and washers that attach the bonding jumpers to the fueling control panel.

BOEING PROPRIETARY - Copyright (C) - Unpublished Work - See title page for details.

TASK 28-21-13-404-016

3. Install the Fueling Control Panel (Fig. 401)

A. References

(1) AMM 06-44-00/201, Wing Access Doors and Panels
(2) AMM 12-11-01/301, Pressure Fueling
(3) AMM 20-41-01/201, Electrostatic Discharge Sensitive Devices
(4) AMM 24-22-00/201, Electric Power Control
(5) AMM 27-81-00/201, Leading Edge Slat System

B. Access

(1) Location Zones

521 Leading Edge to Front Spar (Left)

(2) Access Panels

521QB Fueling Station Door (Left)

C. Procedure

S 424-062

WARNING: WHEN YOU INSTALL AN ELECTROSTATIC DISCHARGE SENSITIVE (ESDS) UNIT, MAKE SURE THE COMPONENT AND THE MOUNT RACK TOUCH EACH OTHER. THEN REMOVE THE ELECTROSTATIC DISCHARGE (ESD) DUST CAPS. THIS LETS THE UNIT RELEASE THE ELECTROSTATIC DISCHARGE. THIS WILL PREVENT INJURY TO PERSONS AND DAMAGE TO THE UNIT ELECTRICAL CONNECTORS.

CAUTION: YOU MUST CAREFULLY DO THE STEPS IN THE TASK BELOW TO INSTALL THE FUELING CONTROL PANEL. A FAILURE TO DO THE STEPS CORRECTLY CAN CAUSE DAMAGE TO THE EQUIPMENT.

(1) Do the "Installation of ESDS Metal Encased Units" task to install the fueling control panel (AMM 20-41-01/201).

S 424-064

(2) Install the nuts and washers to attach the bonding jumpers to the fueling control panel.

S 434-020

(3) Install the wire bundle in the track and put the wires through the holes in the bracket.

BOEING PROPRIETARY - Copyright (C) - Unpublished Work - See title page for details.

S 424-065

CAUTION: WHEN YOU INSTALL THE FUELING CONTROL PANEL, MAKE SURE THAT THERE IS NO INTERFERENCE WITH THE ADJACENT SYSTEMS. MAKE SURE YOU CORRECTLY INSTALL THE WIRE BUNDLES OR OTHER PANEL COMPONENTS. FAILURE TO INSTALL THE FUELING CONTROL PANEL CORRECTLY CAN CAUSE DAMAGE TO THE LEADING EDGE SLAT TORQUE TUBE.

(4) Put and hold the fueling control panel near where it is to be installed.

S 434-022
(5) Remove the tags as you install the electrical connectors to the correct indicator, light or switch on the fueling control panel.

S 424-023
(6) Align the fueling control panel with the forward and aft brackets.

S 434-024
(7) Install the nuts and washers on the fueling control panel.

S 864-026
(8) Remove the DO-NOT-CLOSE tags and close these circuit breakers on the P6 panel:
(a) 6E5, FUELING CONTROL
(b) 6E6, FUELING VALVES

S 864-027
(9) Remove the DO-NOT-CLOSE tags and close these circuit breakers on the P11 panel:
(a) 11C34, FUEL QTY 1
(b) 11M19, FUEL QTY 2

S 864-028
(10) Remove the DO-NOT-CLOSE tags and close these circuit breakers on the P34 panel:
(a) 34L2, FUEL QTY REFUEL
(b) 34L5, FLNG VALVES

S 864-029
(11) Supply electrical power (AMM 24-22-00/201).

S 864-030
(12) Push and hold the IND TEST switch on the fueling control panel.

S 214-031
(13) Make sure the top and bottom displays on the LOAD SELECT indicators show 88.8.

BOEING PROPRIETARY - Copyright (C) - Unpublished Work - See title page for details.

S 864-032
(14) Release the IND TEST switch.

S 214-033
(15) Make sure the top display of each LOAD SELECT indicator shows the applicable fuel tank quantity.

S 214-034
(16) Make sure the bottom display of each LOAD SELECT indicator goes off.

S 864-035
(17) Set the LOAD SELECT control to the quantity of fuel that you want.

S 864-036
(18) Push the RIGHT MAIN, CENTER AUX, and LEFT MAIN SET switches.

S 214-037
(19) Make sure the bottom display on each LOAD SELECT indicator shows the quantity on the LOAD SELECT control.

S 864-038
(20) Put the BATTERY POWER switch in the BATT position.

S 864-039
(21) Put the RIGHT MAIN and LEFT MAIN DEFUEL VALVES switches to the OPEN position.

S 214-040
(22) Make sure the OPEN lights for the applicable DEFUEL VALVES switches come on.

S 864-041
(23) Put the DEFUEL VALVES switches to the CLOSE position.

S 214-042
(24) Make sure the OPEN lights for the DEFUEL VALVES lights go off.

S 714-046
(25) To do a test of the SYSTEM TEST Switch, OVERRIDE TEST switch and refuel valves, do one of these tasks:
(a) System Test - Pressure Fueling System (AMM 28-21-00/501)

BOEING PROPRIETARY - Copyright (C) - Unpublished Work - See title page for details.

(b) Systems Test - Fueling Control Panel (AMM 28-21-13/501)

D. Put the Airplane Back to Its Usual Condition

S 414-053

(1) Close the fueling station door, 521QB (AMM 06-44-00/201).

S 094-051

(2) Do the activation procedure for the leading edge slat system (AMM 27-81-00/201).

BOEING PROPRIETARY - Copyright (C) - Unpublished Work - See title page for details.

FUELING CONTROL PANEL - ADJUSTMENT/TEST

1. General
   A. This procedure has a system test for the fueling control panel.
   B. This procedure is optional to the pressure fueling system operational test (AMM 28-21-00/501) when the refuel panel is removed.
   C. The system test makes sure that the fueling control panel functions correctly. The procedure tests the SYSTEM TEST switch, the OVERRIDE TEST switch, the refuel valves, and the VTO fuel cutoff.

      NOTE: One tank is filled to VTO and then fuel is transferred. The fuel must be rebalanced as necessary to meet all airplane fuel loading requirements.

   D. Do the steps in sequence.

TASK 28-21-13-735-001

2. System Test - Fueling Control Panel (Fig. 501)

   A. References
      (1) AMM 06-44-00/201, Wings, Access Doors and Panels
      (2) AMM 12-11-01/301, Fuel Tank Pressure Fueling
      (3) AMM 20-41-00/201, Static Grounding
      (4) AMM 24-22-00/201, Electric Power Control
      (5) AMM 27-51-00/201, Trailing Edge Flap System
      (6) AMM 27-61-00/201, Spoiler/Speedbrake Control System
      (7) AMM 27-81-00/201, Leading Edge Slat System
      (8) AMM 28-26-00/201, Defueling
   B. Access
      (1) Location Zones
            211 Control Cabin (Left)
            212 Control Cabin (Right)
            521 Leading Edge to Front Spar (Left)

      (2) Access Panel
            521QB Fueling Station Door (Left)

BOEING PROPRIETARY - Copyright (C) - Unpublished Work - See title page for details.

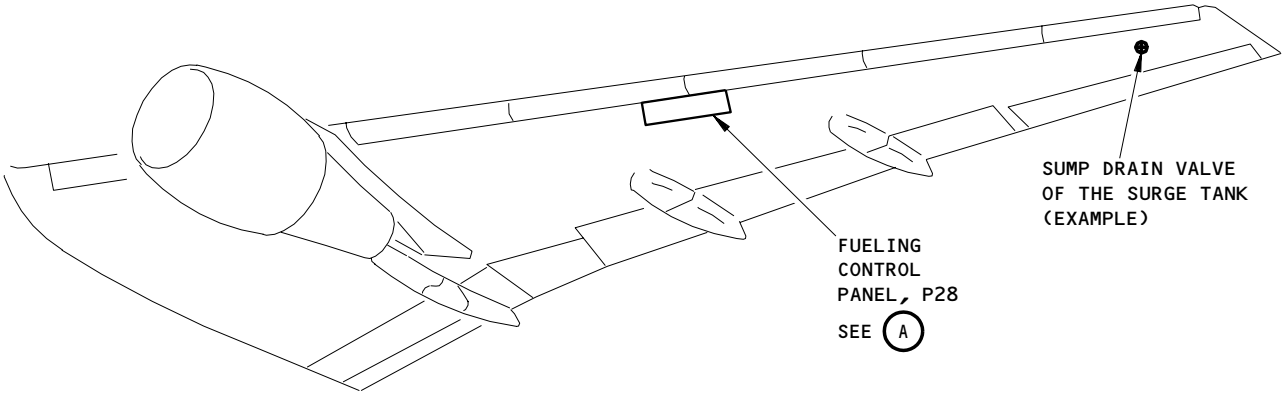

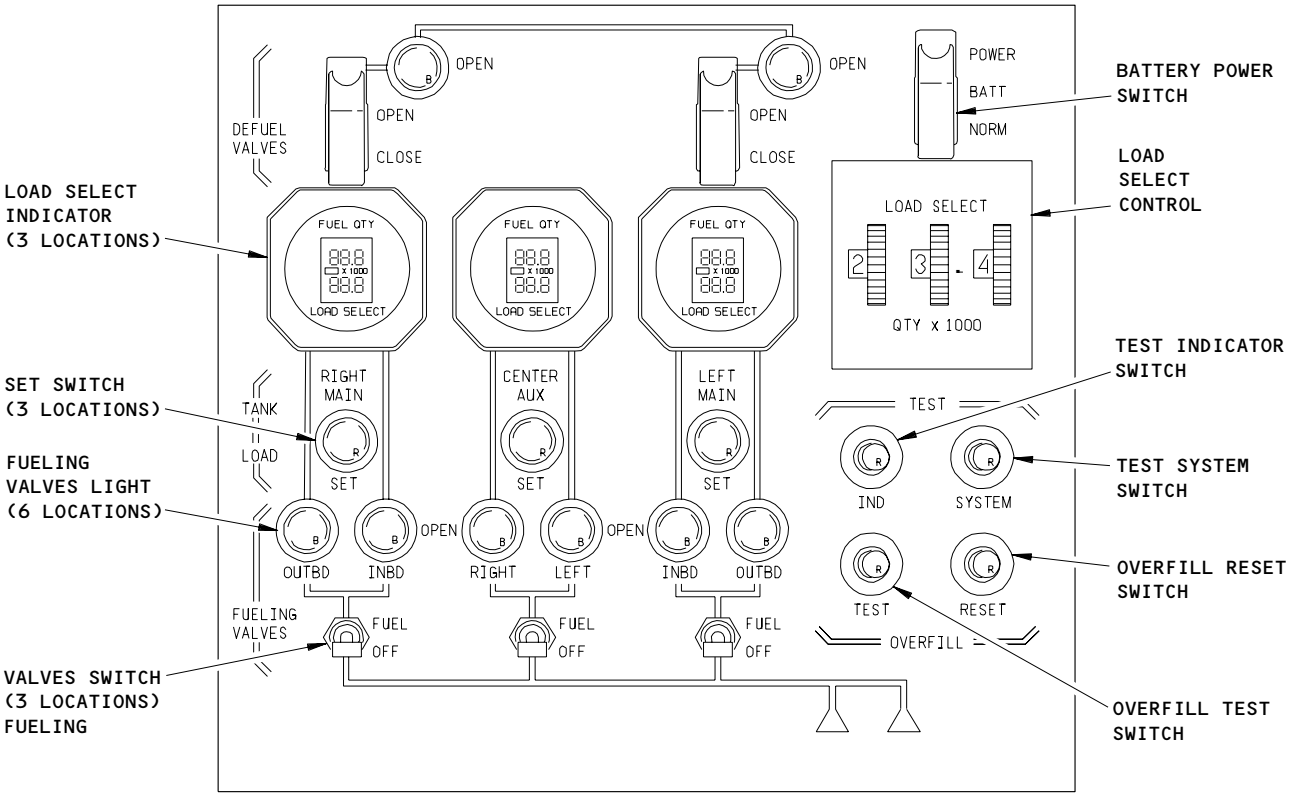

FUELING CONTROL PANEL, P28

A

Fueling Control Panel System Test
Figure 501

BOEING PROPRIETARY - Copyright (C) - Unpublished Work - See title page for details.

C. Prepare for Test

S 865-002
(1) Supply electrical power (AMM 24-22-00/201).

S 865-003
(2) Do the deactivation procedure for the trailing edge flaps (AMM 27-51-00/201).

S 865-004

WARNING: DO THE DEACTIVATION PROCEDURE FOR THE LEADING EDGE SLATS. FAILURE TO DO THE DEACTIVATION PROCEDURE FOR THE LEADING EDGE SLATS COULD CAUSE INJURY TO PERSONS OR DAMAGE TO EQUIPMENT.

(3) Do the deactivation procedure for the leading edge slats (AMM 27-81-00/201).

S 495-005

WARNING: MAKE SURE THE AIRPLANE AND THE FUELING SOURCE ARE ELECTRICALLY BONDED BEFORE YOU DO THE FUELING PROCEDURE OR THE DEFUELING PROCEDURE. MAKE SURE THE AIRPLANE AND ALL WORK STANDS IN USE ARE GROUNDED AND BONDED BEFORE YOU DO MAINTENANCE ON THE FUEL TANK OR FUEL SYSTEM. REFER TO THE PARAGRAPHS ON STATIC GROUNDING PROCEDURE. CORRECT ELECTROSTATIC GROUNDING AND BONDING PREVENTS STATIC ELECTRICITY DISCHARGES AND POSSIBLE FIRE OR EXPLOSION.

(4) Make sure the airplane is grounded correctly (AMM 20-41-00/201).

S 495-006
(5) Connect a grounding cable from the fueling source and other fuel equipment being used for tank maintenance to an approved and identified static ground.

BOEING PROPRIETARY - Copyright (C) - Unpublished Work - See title page for details.

S 495-007
(6) Connect a bonding cable from the fueling vehicle to an approved electrical grounding or bonding connection on the airplane.

NOTE: If the fueling vehicle has a permanently attached V or Y grounding cable, connect one part of the V or Y to an approved identified ground. Then connect the other part of the V or Y cable to an approved electrical bonding or grounding point on the airplane.

S 015-011
(7) Open the fueling station door, 521QB (AMM 06-44-00/201).

S 215-019
(8) Make sure these circuit breakers on the main power distribution panel, P6, are closed:
(a) 6E5, FUELING CONTROL
(b) 6E6, FUELING VALVES

S 215-020
(9) Make sure these circuit breakers on the overhead circuit breaker panel, P11, are closed:
(a) 11C34, FUEL QTY 1
(b) 11M19, FUEL QTY 2

S 215-021
(10) Make sure these circuit breakers on the APU external power panel, P34, are closed:
(a) 34L2, FUEL QTY REFUEL
(b) 34L5, FLNG VALVES

S 215-022
(11) Make sure the six EICAS circuit breakers on the P11 panel are closed.

S 865-025
(12) Put the BATT POWER switch on the fueling control panel, P28, to the NORM position.

S 655-033
(13) Defuel the main fuel tanks completely (AMM 28-26-00/201).

S 655-034
(14) Defuel the auxiliary fuel tank completely (AMM 28-26-00/201).

BOEING PROPRIETARY - Copyright (C) - Unpublished Work - See title page for details.

S 215-035
(15) Make sure the FUEL CONFIG light on the overhead panel, P5, is off.

S 215-036
(16) Make sure the EICAS message, LOW FUEL, shows on the top display.

S 655-037
(17) Connect the fueling nozzles to the fueling adapters (AMM 12-11-01/301).

D. Test of the Right Main Fuel Tank

S 865-038
(1) Set the LOAD SELECT control on the fueling control panel to an applicable fuel quantity.

NOTE: Set the LOAD SELECT to a typical light fuel load that will allow a test of the load select function. The numerals on the LOAD SELECT control and display are multiplied by 1000 to get the fuel quantity.

S 865-039
(2) Push the RIGHT MAIN SET switch.

S 215-040
(3) Make sure the lower display of the RIGHT MAIN LOAD SELECT indicator shows the applicable fuel quantity.

S 865-041
(4) Put the RIGHT MAIN FUELING VALVES switch to the FUEL position.

S 215-042
(5) After fueling starts, make sure the RIGHT MAIN INBD and OUTBD FUELING VALVES lights come on.

S 865-043
(6) Push the TEST SYSTEM switch for 1 second and release.

S 655-044
(7) Make sure the fuel flow stops.

NOTE: Fueling will automatically start approximately 10 seconds after you push the TEST SYSTEM switch.

BOEING PROPRIETARY - Copyright (C) - Unpublished Work - See title page for details.

S 215-045
(8) Make sure the RIGHT MAIN INBD and INBD FUELING VALVES lights go off.

S 655-046
(9) Continue fueling until the load select fuel shutoff occurs.

S 215-047
(10) Make sure the fuel quantity shown on the RIGHT MAIN LOAD SELECT indicator is within 200 pounds (100 kilograms) of the load selected.

NOTE: The numerals shown on the display are multiplied by 1000 to get the fuel quantity.

S 215-048
(11) Make sure the FUEL CONFIG light on the P5 panel comes on.

S 215-049
(12) Make sure the EICAS message, LOW FUEL, shows on the top display.

S 865-050
(13) Move the COMPUTER switch on the EICAS DISPLAY select panel to the L position.

S 215-052
(14) Make sure the EICAS message, LOW FUEL, shows on the top display.

S 865-053
(15) Move the COMPUTER switch on the EICAS DISPLAY select panel to the R position.

S 215-055
(16) Make sure the EICAS message, LOW FUEL, shows on the top display.

S 865-056
(17) Put the RIGHT MAIN FUELING VALVES switch to the OFF position.

BOEING PROPRIETARY - Copyright (C) - Unpublished Work - See title page for details.

E. Test of the Left Main Fuel Tank

S 865-057
(1) Set the LOAD SELECT control on the fueling control panel to an applicable fuel quantity.

NOTE: Set the LOAD SELECT to a typical light fuel load that will allow a test of the load select function. The numerals on the LOAD SELECT control and display are multiplied by 1000 to get the fuel quantity.

S 865-058
(2) Push the LEFT MAIN SET switch.

S 215-059
(3) Make sure the lower display of the LEFT MAIN LOAD SELECT indicator shows the applicable fuel quantity.

S 865-060
(4) Put the LEFT MAIN FUELING VALVES switch to the FUEL position.

S 215-061
(5) After fueling starts, make sure the LEFT MAIN INBD and OUTBD FUELING VALVES lights come on.

S 865-062
(6) Push the TEST SYSTEM switch for 1 second and release.

S 655-063
(7) Make sure the fuel flow stops.

NOTE: Fueling will automatically start approximately 10 seconds after you push the TEST SYSTEM switch.

S 215-064
(8) Make sure the LEFT MAIN INBD and OUTBD FUELING VALVES lights go off.

S 655-065
(9) Continue fueling until the load select fuel shutoff occurs.

BOEING PROPRIETARY - Copyright (C) - Unpublished Work - See title page for details.

S 215-066
(10) Make sure the fuel quantity shown on the LEFT MAIN LOAD SELECT indicator is within 200 pounds (100 kilograms) of the load selected.

NOTE: The numerals shown on the display are multiplied by 1000 to get the fuel quantity.

S 215-067
(11) Make sure the FUEL CONFIG light on the P5 panel goes off.

S 215-068
(12) Make sure the EICAS message, LOW FUEL, does not show on the top display.

S 865-069
(13) Put the LEFT MAIN FUELING VALVES switch to the OFF position.

F. Test of the Auxiliary Fuel Tank

S 865-071
(1) Set the LOAD SELECT control on the fueling control panel to an applicable fuel quantity.

NOTE: Set the LOAD SELECT to a typical light fuel load that will allow a test of the load select function. The numerals on the LOAD SELECT control and display are multiplied by 1000 to get the fuel quantity.

S 865-085
(2) Push the CENTER AUX SET switch.

S 215-086
(3) Make sure the set quantity shows on the lower display of the LOAD SELECT Indicator.

S 865-087
(4) Put the CENTER AUX FUELING VALVES switch to the FUEL position.

S 215-088
(5) After fueling starts, make sure the CENTER AUX LEFT and RIGHT FUELING VALVES lights come on.

S 865-089
(6) Push the TEST SYSTEM switch for 1 second and release.

BOEING PROPRIETARY - Copyright (C) - Unpublished Work - See title page for details.

S 655-090
(7) Make sure the fuel flow stops.

NOTE: Fueling will automatically start approximately 10 seconds after you push the TEST SYSTEM switch.

S 215-091
(8) Make sure the CENTER AUX LEFT and RIGHT FUELING VALVES lights go off.

S 655-092
(9) Continue fueling until the load select fuel shutoff occurs.

S 215-099
(10) Make sure the fuel quantity shown on the CENTER AUX LOAD SELECT indicator is within 200 pounds (100 kilograms) of the load selected.

NOTE: The numerals shown on the display are multiplied by 1000 to get the fuel quantity.

S 215-107
(11) Make sure the FUEL CONFIG light on the P5 panel comes on.

S 215-109
(12) Make sure the EICAS message, FUEL CONFIG, shows on the top display.

S 865-110
(13) Put the CENTER AUX FUELING VALVES switch to the OFF position.

G. Overfill Test

S 865-111

CAUTION: PUT CONTAINERS AT THE VENT SCOOP IN EACH SURGE TANK TO CATCH FUEL WHEN THE OVERFILL SYSTEM IS INOPERABLE. FUEL LEAKAGE COULD CAUSE DAMAGE TO EQUIPMENT.

(1) Set the LOAD SELECT control on the fueling control panel to an applicable fuel quantity.

NOTE: Set the LOAD SELECT to a typical light fuel load that will allow for a test of the OVERFILL TEST switch. The numerals on the LOAD SELECT control and display are multiplied by 1000 to get the fuel quantity.

S 865-112
(2) Push the RIGHT MAIN SET switch.

BOEING PROPRIETARY - Copyright (C) - Unpublished Work - See title page for details.

S 215-113
(3) Make sure the lower display of the RIGHT MAIN LOAD SELECT indicator shows the applicable fuel quantity.

S 865-114
(4) Put the RIGHT MAIN FUELING VALVES switch to the FUEL position.

S 865-115
(5) Push the OVERFILL TEST switch.

S 655-116
(6) Make sure the fuel flow stops.

S 215-117
(7) Make sure the RIGHT MAIN INBD and OUTBD FUELING VALVES lights go off.

S 865-118
(8) Push the OVERFILL RESET switch.

S 215-119
(9) Make sure the RIGHT MAIN INBD and OUTBD FUELING VALVES lights come on.

S 655-120
(10) Continue fueling until the load select fuel shutoff occurs.

S 865-121
(11) Put the RIGHT MAIN FUELING VALVES switch to the OFF position.

S 865-122
(12) Set the LOAD SELECT control on the fueling control panel to an applicable fuel quantity.

NOTE: Set the LOAD SELECT to a typical light fuel load that will allow a test of the OVERFILL TEST switch. The numerals on the LOAD SELECT control and display are multiplied by 1000 to get the fuel quantity.

BOEING PROPRIETARY - Copyright (C) - Unpublished Work - See title page for details.

S 865-123
(13) Push the LEFT MAIN SET switch.

S 215-124
(14) Make sure the lower display of the LEFT MAIN LOAD SELECT indicator shows the applicable fuel quantity.

S 865-125
(15) Put the LEFT MAIN FUELING VALVES switch to the FUEL position.

S 865-126
(16) Push the OVERFILL TEST switch.

S 655-127
(17) Make sure the fuel flow stops.

S 215-128
(18) Make sure the LEFT MAIN INBD and OUTBD FUELING VALVES lights go off.

S 865-129
(19) Push the OVERFILL RESET switch.

S 215-130
(20) Make sure the LEFT MAIN INBD and OUTBD FUELING VALVES lights come on.

S 655-131
(21) Continue fueling until the load select fuel shutoff occurs.

S 865-132
(22) Put the LEFT MAIN FUELING VALVES switch to the OFF position.

S 865-139
(23) Set the LOAD SELECT control on the fueling control panel to an applicable fuel quantity.

NOTE: Set the LOAD SELECT to a typical light fuel load that will allow a test of the OVERFILL TEST switch. The numerals on the LOAD SELECT control and display are multiplied by 1000 to get the fuel quantity.

BOEING PROPRIETARY - Copyright (C) - Unpublished Work - See title page for details.

S 865-147
(24) Push the CENTER AUX SET switch.

S 215-148
(25) Make sure the set quantity shows on the bottom display of the CENTER AUX LOAD SELECT indicator.

S 865-149
(26) Put the CENTER AUX FUELING VALVES switch to the FUEL position.

S 865-150
(27) Push the OVERFILL TEST switch.

S 655-151
(28) Make sure the fuel flow stops.

S 215-152
(29) Make sure the CENTER AUX LEFT and RIGHT FUELING VALVES lights go off.

S 865-153
(30) Push the OVERFILL RESET switch.

S 215-154
(31) Make sure the CENTER AUX LEFT and RIGHT FUELING VALVES lights go off.

H. Put the Airplane Back to Its Usual Condition

S 095-192
(1) Disconnect the fueling nozzle from the fueling adapter (AMM 12-11-01/301).

S 095-193
(2) Disconnect the bonding cable that you connected from the airplane to the fueling source.

BOEING PROPRIETARY - Copyright (C) - Unpublished Work - See title page for details.

S 415-196
(3) Close the fueling station door, 521QB (AMM 06-44-00/201).

S 865-204

WARNING: MOVE ALL PERSONS AND EQUIPMENT AWAY FROM THE SLATS. INJURY TO PERSONS OR DAMAGE TO EQUIPMENT COULD OCCUR IF THEY ARE IN THE SLAT AREA WHEN YOU DO THE ACTIVATION PROCEDURE.

(4) Do the activation procedure for the leading edge slat (AMM 27-81-00/201).

S 865-205
(5) Do the activation procedure for the trailing edge flaps (AMM 27-51-00/201).

S 655-209
(6) Do this task to rebalance the fuel load: Tank to Tank Transfer (AMM 28-26-00/201).

NOTE: Follow all applicable fuel loading requirements.

S 865-206
(7) Remove electrical power if it is not necessary (AMM 24-22-00/201).

BOEING PROPRIETARY - Copyright (C) - Unpublished Work - See title page for details.

ENGINE FUEL-FEED SYSTEM - DESCRIPTION AND OPERATION

1. General (Fig. 1)
   A. The fuel feed system supplies fuel to the airplane's engines and auxiliary power unit from the three fuel tanks (AMM 28-11-00/001).
   B. SAS 050-051, 150-167 PRE-SB 28-34;
      MTH 275-280 PRE-SB 28-34;
      Two fuel-feed systems that operate independently supply fuel from the fuel tanks to the engines. These fuel-feed systems are connected by the engine fuel crossfeed valve (referred to as "the crossfeed valve"). Usually each engine gets fuel from the applicable main fuel tank. If the crossfeed valve is open, each engine can get fuel from any fuel tank. The engine fuel shutoff valve (spar valve) controls the fuel flow from the fuel tanks to the engine.
   C. SAS 050, 051, 150-167 POST-SB 28-34;
      SAS 052-149, 168-999;
      MTH 275-280 POST-SB 28-34;
      MTH 281-999;
      Two fuel-feed systems operate independently to supply fuel from the fuel tanks to the engines. These fuel-feed systems are connected by a system of two engine fuel crossfeed valves (AFT and FWD) that operate independently. Each crossfeed valve is an alternative to the other crossfeed valve. Usually each engine gets fuel from the applicable main fuel tank. If one of the two crossfeed valves is open, each engine can get fuel from any fuel tank. An engine fuel shutoff valve (spar valve) controls the fuel flow from the fuel tanks to the engine.
   D. Fuel pressure is provided by two fuel boost pumps, driven by an electric motor, v mounted in a common housing, in each main tank. In addition, each engine fuel feed subsystem has a boost pump bypass valve to allow suction feed to the engine should both fuel boost pumps fail.
   E. Two override pumps permit fuel-feed from the auxiliary fuel tank. One override pump is installed in the left auxiliary fuel tank and one is installed in the right auxiliary fuel tank. The override pumps supply fuel to the respective left or right halves of the engine fuel-feed manifold at a pressure higher than the fuel boost pumps in the main fuel tanks. This permits the auxiliary fuel tank fuel to be used before fuel is taken from the main fuel tanks.
   F. The automatic sumping jet pumps (referred to as "the jet pumps") scavenge water or any other contaminant from the fuel tank sump areas. The jet pumps, powered by the motive flow from the fuel boost pumps or the override pumps, direct the scavenged discharge to the inlet of the pump. The scavenge is mixed with fuel and sent to the engine.
   G. The fuel management panel on the overhead panel, P5, controls and monitors the engine fuel-feed system. Three phase 115 volts, 400 Hertz electrical current powers the fuel boost pumps and the override pumps. 28 volts dc powers the valves and control circuits.
   H. The EICAS computer monitors the boost pump pressure and valve operation and displays the faults that occur.
2. Component Details
   A. Engine Fuel Shutoff Valve (Spar Valve) and Engine Fuel Crossfeed Valve (Fig. 2)

BOEING PROPRIETARY - Copyright (C) - Unpublished Work - See title page for details.

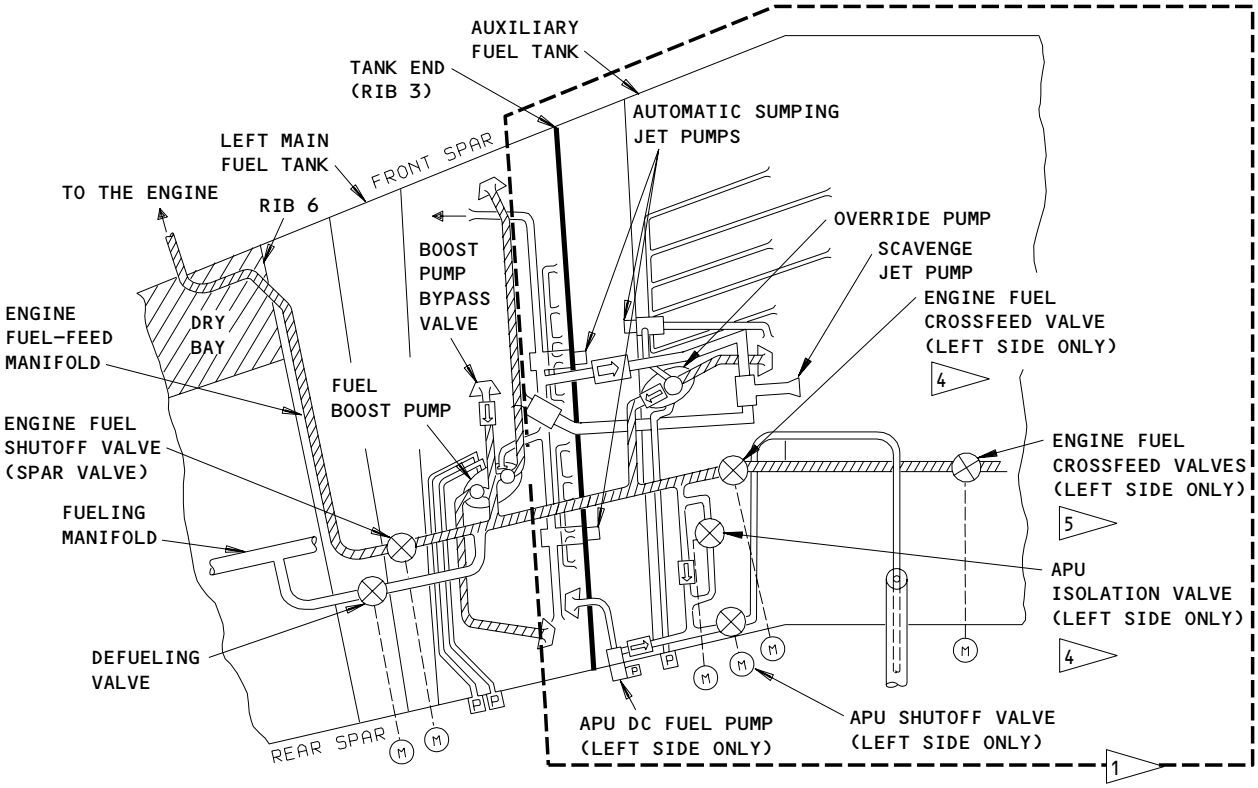

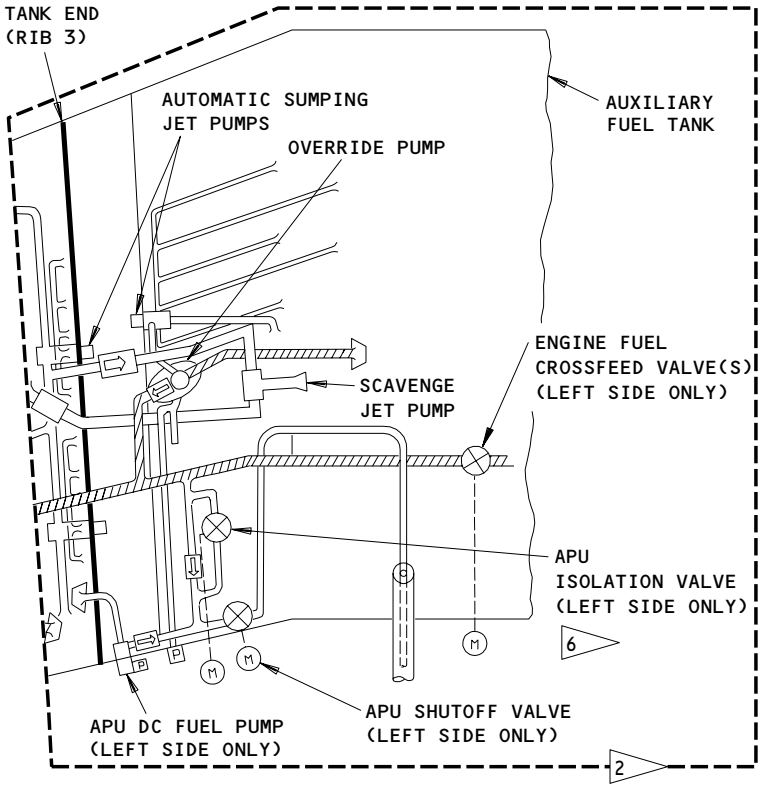

1 MTH 275 PRE-SB 28-27; MTH 276; SAS 150,152-154 PRE-SB 28-27

2 SAS 050,051,162-164

4 MTH 275,276 PRE-SB 28-34; SAS 150-154 PRE-SB 28-34

5 MTH 275,276 POST-SB 28-34; SAS 150-154 POST-SB 28-34

6 SAS 050,051,162-164 PRE-SB 28-34

7 SAS 155-157,165-167 PRE-SB 28-34; MTH 277-280 PRE-SB 28-34

Engine Fuel-Feed System
Figure 1 (Sheet 1)

BOEING PROPRIETARY - Copyright (C) - Unpublished Work - See title page for details.

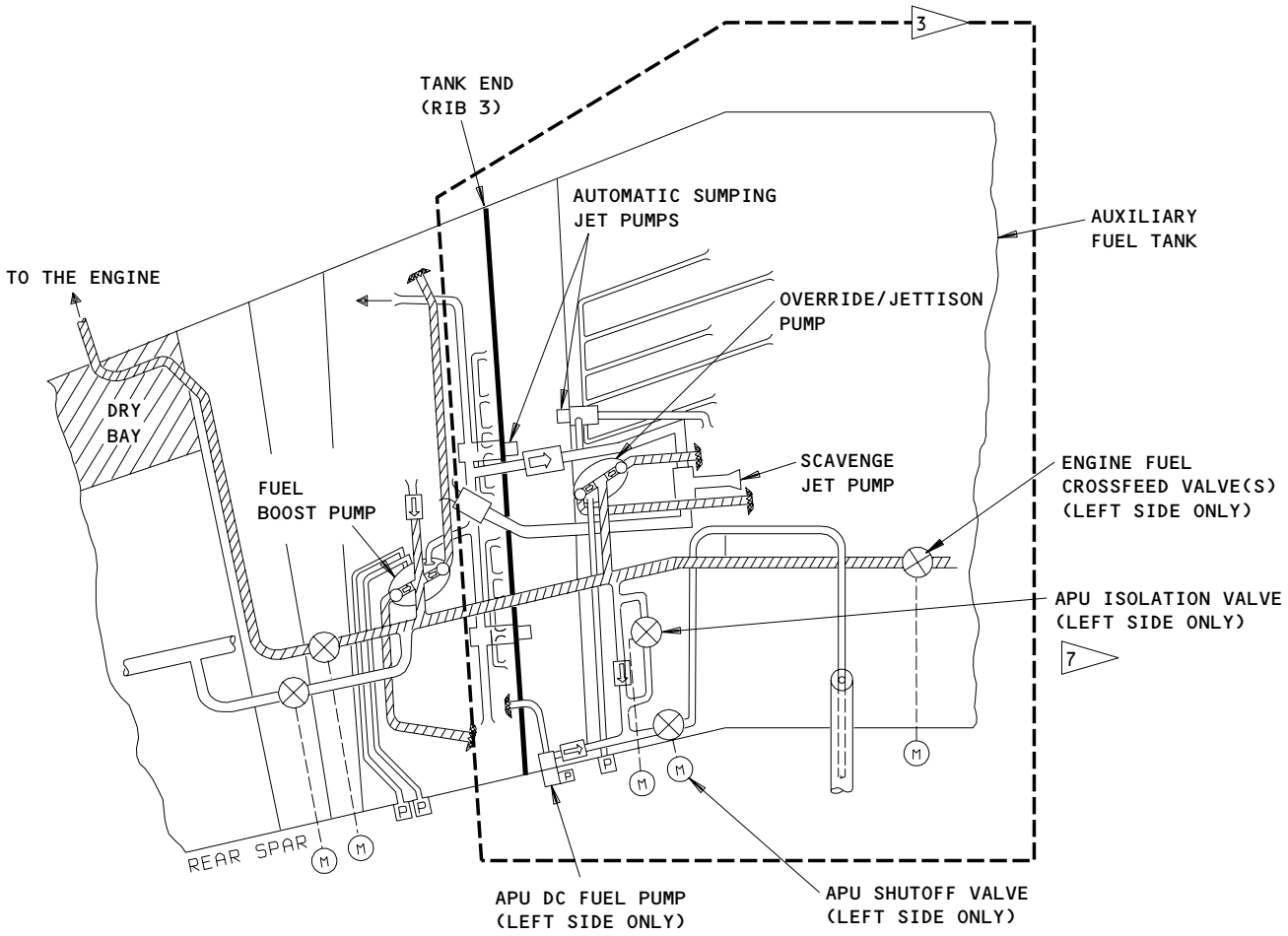

3 SAS 150,152-154 POST-SB 28-27; SAS 052-149,155-161,165-999;
MTH 275 POST-SB 28-27; MTH 277-999

7 SAS 155-157,165-167 PRE-SB 28-34;
MTH 277-280 PRE-SB 28-34

Engine Fuel-Feed System
Figure 1 (Sheet 2)

BOEING PROPRIETARY - Copyright (C) - Unpublished Work - See title page for details.

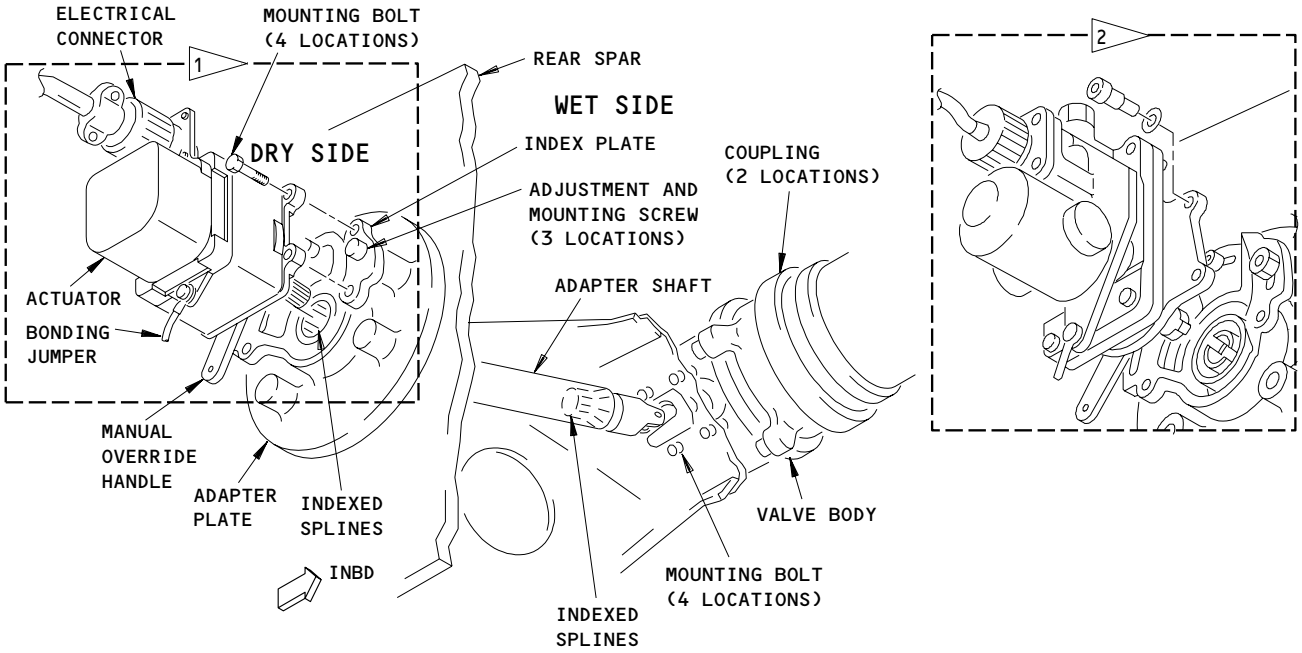

ENGINE FUEL CROSSFEED VALVE 3
AND ENGINE FUEL SHUTOFF VALVE (SPAR VALVE)

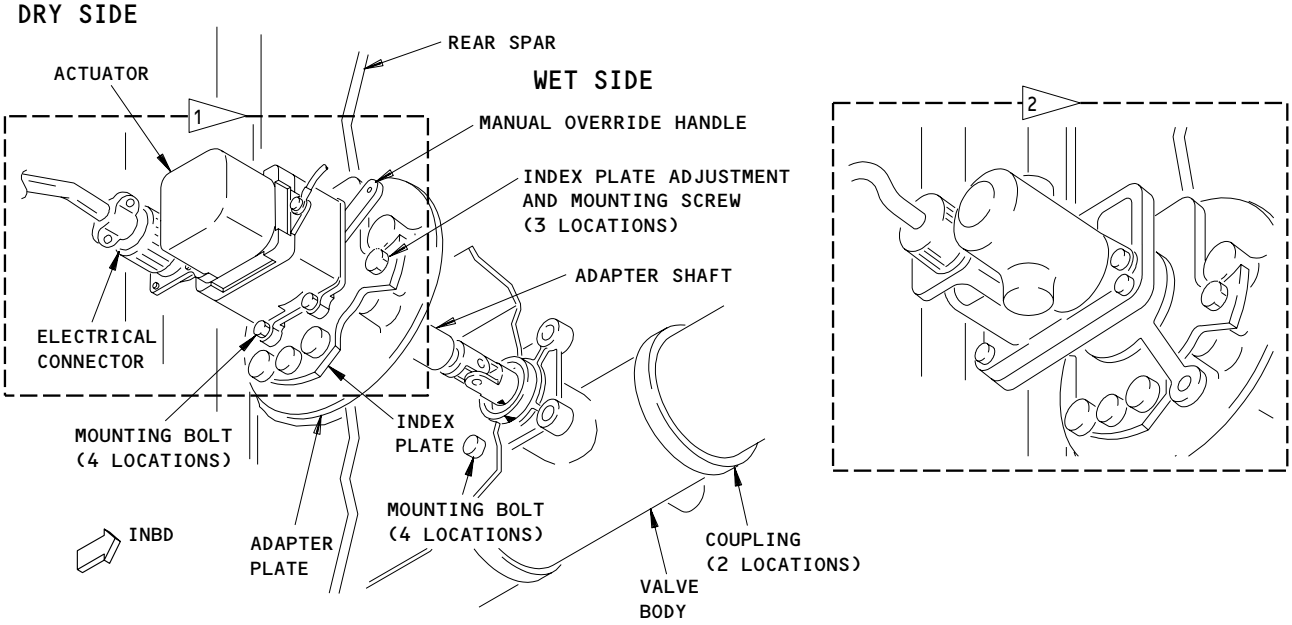

ENGINE FUEL CROSSFEED VALVE(S) 4

1 RECOMMENDED

2 ALTERNATE

3 AIRPLANES WITH THE FUEL CROSSFEED VALVE INSTALLED ON THE LEFT WING REAR SPAR.

4 AIRPLANES WITH THE FUEL CROSSFEED VALVE(S) INSTALLED ON REAR SPAR OF THE CENTER AUXILARY FUEL TANK.

Engine Fuel Crossfeed Valve and Engine Fuel Shutoff Valves (Spar Valves)
Figure 2

BOEING PROPRIETARY - Copyright (C) - Unpublished Work - See title page for details.

(1) Two engine fuel shutoff valves are installed on the wing rear spar. The engine fuel shutoff valves are found between ribs 4 and 5 on each wing.

(2) AIRPLANES WITH A SINGLE FUEL CROSSFEED VALVE;
The engine fuel crossfeed valve is found on the left wing rear spar between ribs 1 and 2 or on the rear spar in the center auxiliary fuel tank.

(3) AIRPLANES WITH FORWARD AND AFT FUEL CROSSFEED VALVES;
The two engine fuel crossfeed valves (AFT and FWD) are installed on the rear spar in the center auxiliary fuel tank. These two crossfeed valves are the same.

(4) The engine fuel shutoff valve and the engine fuel crossfeed valve are almost the same.

(a) The valve consists of three parts; valve body, adapter shaft, and actuator.

1) The valve body is found inside the fuel tank, installed on a bracket attached to the front of the rear spar.

2) The valve body includes a valve housing, rotating disc type valve, tubing connections, an indexed splined operating shaft with a universal joint, and one or two thermal relief valves. The thermal relief valve(s) are ported to the tank. Defueling is required for access to valve body.

3) The adapter shaft consists of an adapter plate, and a shaft with an universal joint. Both ends of the shaft have joints with indexed splines for alignment of the valve body and actuator. The adapter plate attaches to the rear spar. An index plate attaches to the adapter plate with three screws through slotted holes in the mounting plate. The slotted holes provide for adjustment of the actuator. Defueling is necessary for access to the adapter shaft.

4) The actuator consists of a direct current electric motor, a gear train, an electrical connector, open-close limit switches, a position indicator, and a manual override handle. The actuator mounts to the rear spar. Defueling is not required for actuator removal.

(5) Operation

(a) AIRPLANES WITH A SINGLE FUEL CROSSFEED VALVE;
The engine fuel shutoff valve (spar valve) controls the flow of fuel from tank to its respective engine. The crossfeed valve, when it is open, permits fuel to flow from any fuel tank to any engine.

BOEING PROPRIETARY - Copyright (C) - Unpublished Work - See title page for details.

(b) AIRPLANES WITH FORWARD AND AFT FUEL CROSSFEED VALVES;
The engine fuel shutoff valve (spar valve) controls the flow of fuel from tank to its respective engine. If one of the two crossfeed valves is open, it permits fuel to flow from any fuel tank to any engine. If one of the crossfeed valves does not open, you can open the other crossfeed valve as an alternative.

(c) Thermal relief valve(s) fitted in the engine fuel shutoff valve relieve excessive fuel line pressure due to thermal expansion. The thermal relief valve(s) are ported to the tank side of the valve and crack and reseat within the pressure range of 70 to 55 psi.

(d) The shutoff valve and the crossfeed valves are operated by an electric actuator connected by an adapter shaft.

(e) To open the valve, apply 28 volts dc power between pins 2 and 4 at the actuator electrical connector. The actuator drives to the OPEN position. When the actuator reaches OPEN, an internal limit switch actuates and de-energizes the actuator.

(f) To close the valve, apply 28 volts dc power between pins 6 or 5 and pin 4 of the actuator electrical connector. The actuator drives to CLOSE. When the actuator reaches CLOSE position, an internal limit switch actuates and de-energizes the actuator.

(g) When the actuator reaches either extreme position, (OPEN or CLOSE) operating power from pins 2, 5 or 6, will be applied to pin 3 of the actuator electrical connector to provide an external indication that the selection position has been reached.

(h) The actuator manually operates to either OPEN or CLOSE by use of the manual override handle.

B. Boost Pump Bypass Valve (Fig. 3)

(1) The boost pump bypass valve (referred to as "the bypass valve") is installed at the end of the suction feed line in each main fuel tank. The flapper type check valve has a screen over the inlet port. An arrow on the valve body indicates direction of fuel flow.

(2) Normally the bypass valve closes against pressure from the fuel boost pump, or override pump. Should the pumps become inoperative, the bypass valve opens, and permits suction feed by the engines.

C. Fuel Boost Pump Assembly (Fig. 4)

(1) Two main tank fuel boost pumps assemblies, one in each main tank, mount over oval cutouts in the lower surface of the wing.

BOEING PROPRIETARY - Copyright (C) - Unpublished Work - See title page for details.

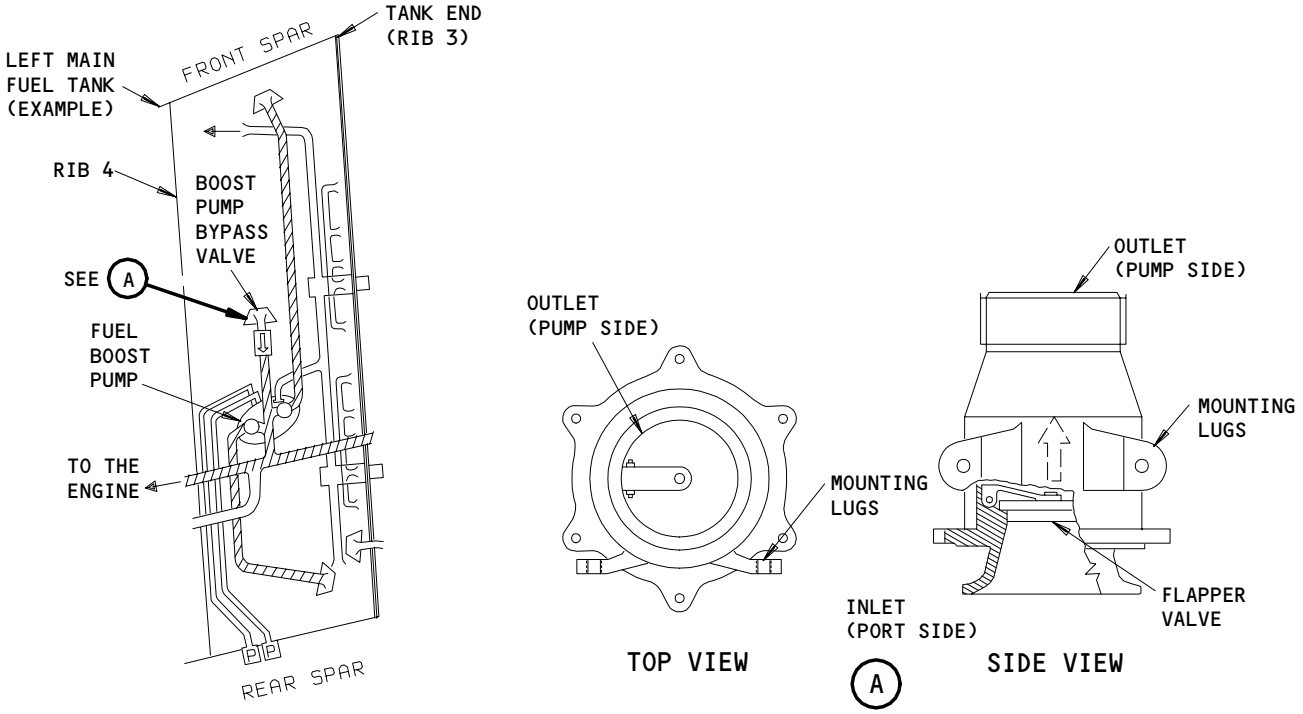

Boost Pump Bypass Valve
Figure 3

BOEING PROPRIETARY - Copyright (C) - Unpublished Work - See title page for details.

(2) The main fuel boost pump installation has a housing unit, mounting ring, and access cover. The housing unit has the subsequent plug-in modules: two pumping units, discharge check valve, and the motive flow and screen valve assembly.

(a) The access cover supplies access to the dry bay of the main fuel boost pump housing for servicing the pumping units, discharge check valve, and motive flow valve and screen valve module. A Philips screwdriver is necessary to remove plug-in modules. The main housing unit has no wear surfaces and forms a semi-permanent part of the wing.

1) The access cover consists of a flat plate. Two instruction plates on the back of the cover provide instructions for servicing the pump units, discharge check module, and motive flow module. A lanyard connects the cover to the pump housing when the cover is removed from the wing. When installed, the smooth outside surface of the cover forms part of the wing skin.

2) The mounting ring structurally attaches the housing unit to the lower wing skin. The wing skin clamps between the mounting wing and the housing unit. The access cover completely covers the mounting ring when in place.

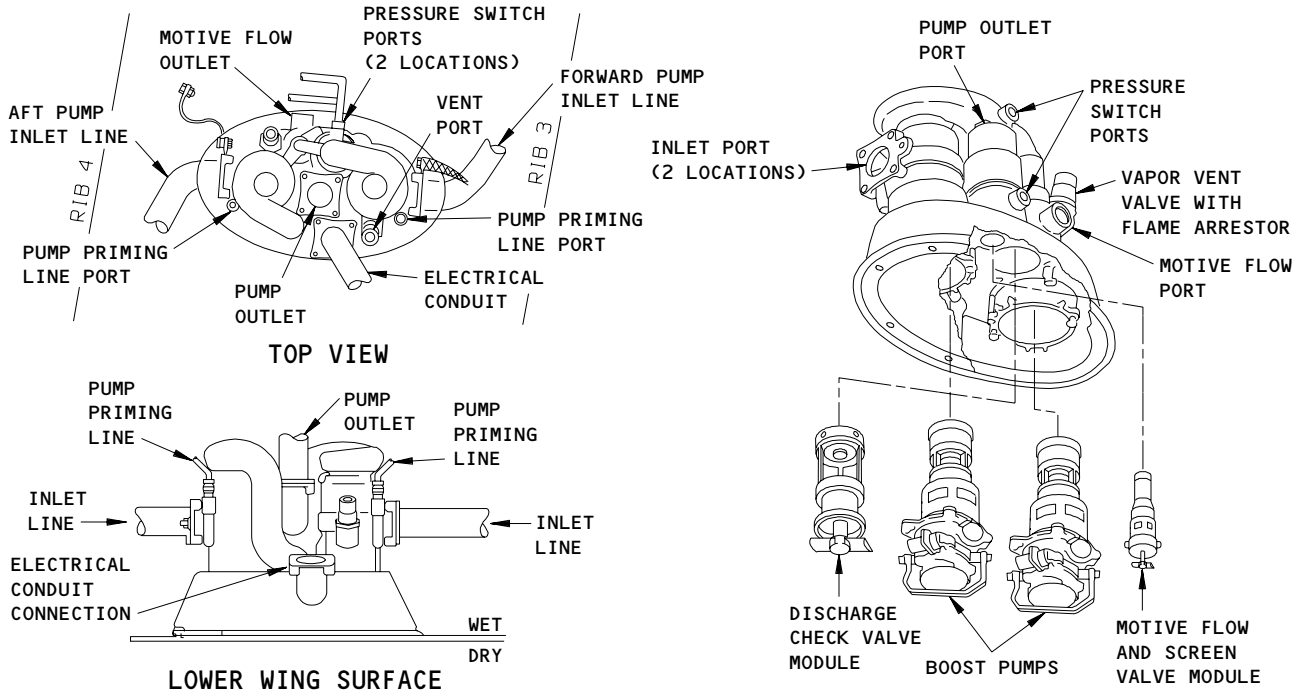

Main Tank Fuel Boost Pump Assembly
Figure 4

BOEING PROPRIETARY - Copyright (C) - Unpublished Work - See title page for details.

D. Fuel Boost Pumps

(1) The fuel boost pump assembly contains two identical boost pumps which operate independently. Each boost pump delivers 30,000 pounds of fuel per hour nominal at 15 psi when driven at 7650 RPM. Each boost pump has a three-phase 400 Hertz 115 volt ac electric motor, an impeller, and a reprime element. The plug-in boost pumps are replaced without draining the fuel tanks. A shutoff sleeve must be manually moved to the closed position when the boost pump is removed and to the open position when the boost pump is replaced. A handle permits easy removal/installation of the boost pump.

E. Discharge Check Valve Module

(1) The discharge check valve module contains two main discharge check valves (one for each boost pump). The module prevents backflow of fuel through a non-operating pump unit. The poppet type valves cracking pressure is 1.3 to 1.8 psi. A handle provides ease of removal/installation. Removal of the module from the airplane requires draining of the fuel tank to prevent fuel loss.

F. Motive Flow Screen Module

(1) The motive flow valve module contains two motive flow check valves (one for each boost pump), and a replaceable screen filter. The motive flow check valve prevents backflow through a non-operating pump unit. The check valves are flapper type valves. The module also contains a shutoff valve that allows the screen filter to be changed without draining the fuel tank. When removing the entire module, drain the fuel tank to prevent fuel loss. A handle provides for ease of removal/installation.

G. Boost Pump Vapor Vent Valve

(1) A vapor vent valve, provided for each boost pump, allows the reprime element to expel gas and motor cooling fuel back into the fuel tank. The discharged fuel passes through a check valve.

H. Boost Pump Unit Operation (Fig. 5)

(1) The primary unit of the main tank fuel boost pump is the pumping unit. When supplied with 115 volt 400 Hertz electrical power, the pumping unit runs at 7650 revolutions per minute, providing a fuel flow of 30,000 pounds (13,608 kilograms) per hour, at a minimum pressure rise of 15 psi (103 kPa).

(2) Engine demand controls pump output flow and pressure because the pump is not a positive displacement unit, engine control settings throttle the pump output flow, and the pump delivers only as much fuel as the engine requires.

BOEING PROPRIETARY - Copyright (C) - Unpublished Work - See title page for details.

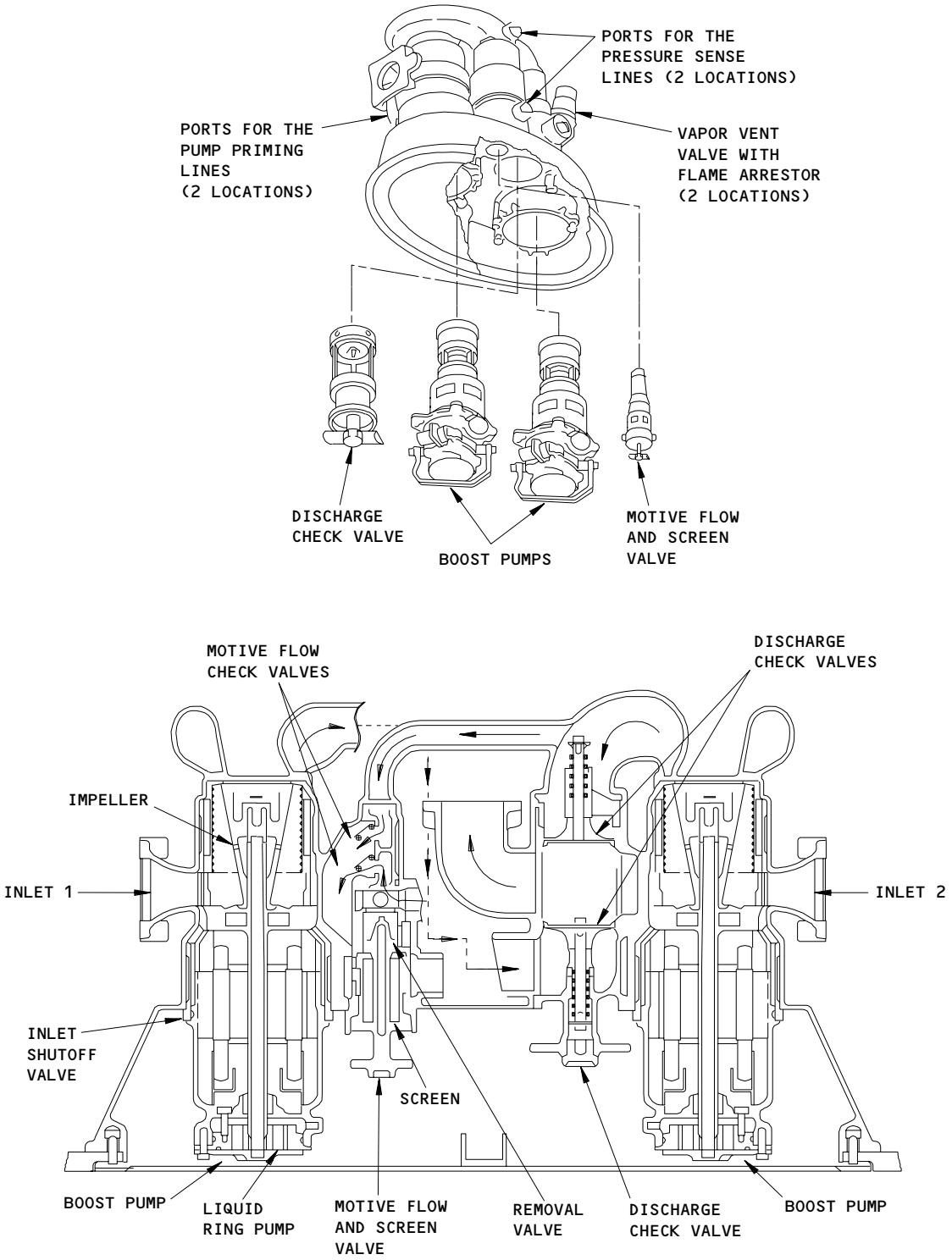

Fuel Boost Pump Operation
Figure 5

BOEING PROPRIETARY - Copyright (C) - Unpublished Work - See title page for details.

(3) Pump priming lines supply fuel into the pump housing during the refueling operation to make sure the pump is primed.

(4) Flow begins with the impeller drawing fuel into the pump through the inlet port and past the inlet shutoff valve. The inlet shutoff valve stays open when the pumping unit operates. At the impeller, air, gases, and fuel pass through small holes in the impeller hub and pumping unit shaft to the reprime element (liquid ring pump). Fuel discharge from the impeller is split; a small flow goes to the motive flow and screen valve, and a larger flow goes to the discharge check valve.

(5) The flow from the liquid ring pump cools the pumping unit motor. The flow also provides a fuel reservoir for the liquid ring element to reprime the main impeller after short periods of dry running. The reprime pump expels cooling fuel and gases through the motor cavity and out of the vapor vent valve back into the fuel tank. The motor cavity, serves as the liquid ring reprime pump fuel reservoir, and charges with fuel during airplane fueling operations. When pressure in the fueling lines exceeds a check valve cracking pressure of 2 to 8 pounds per square inch, fuel enters the liquid ring through the primary ports (one per pumping unit).

(6) Flow into the motive flow module from each pumping unit passes through a flapper type check valve, set at a cracking pressure of 4 inches of water. These valves prevent back flow into a non-operating pump. The two pumping unit flows merge after passing through the check valves and pass through a common screen filter. The flow then exits the motive valve module through the motive flow port into the fuel tank.

(7) The main impeller discharge flow from each pumping unit goes to the discharge check valve module. The module contains separate discharge check valves for each pumping unit. The valves prevent back flow into idle pumping units. After passing the check valves, the two discharge flows merge and exit the module through a common discharge port to the engine.

I. SAS 150, 152-154 PRE-SB 28-27;
SAS 050, 051, 162-164;
MTH 275 PRE-SB 28-27;
MTH 276;

Override Pump (Fig. 6)

(1) Two override pumps, one in the left auxiliary fuel tank and one in the right auxiliary fuel tank, are installed over oval cutouts in the lower surface of the wing.

(2) The override pumps resemble the fuel boost pumps except as follows:
   (a) Only one pumping unit is installed in each pump housing.
   (b) One check valve is in each discharge check valve module.
   (c) Each motive flow and screen valve module contains only one check valve.
   (d) The override pump when supplied with 115 volt, 400 Hertz power runs at 11,400 revolutions per minute. This provides a fuel flow of 25,000 lb (11,340 kg) per hour and a pressure rise of 30 lb per square inch (206kPa).

BOEING PROPRIETARY - Copyright (C) - Unpublished Work - See title page for details.

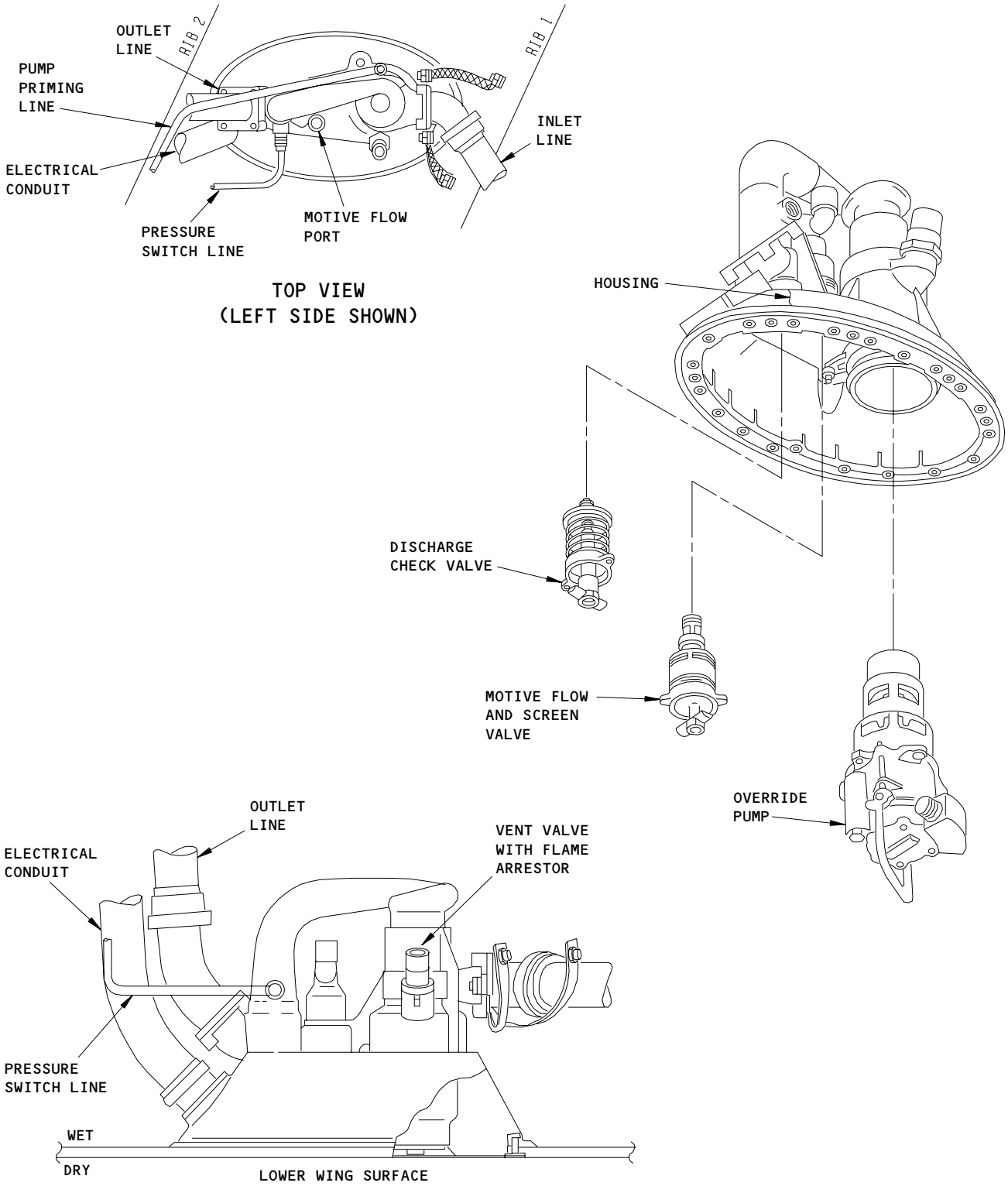

Center Auxiliary Tank Override Pump
Figure 6

BOEING PROPRIETARY - Copyright (C) - Unpublished Work - See title page for details.

J. SAS 150, 152-154 POST-SB 28-27;
SAS 052-149, 155-161, 165-999;
MTH 275 POST-SB 28-27;
MTH 277-999;
Override/Jettison Pump (Fig. 6A)
(1) There is an override/jettison pump installed in the left and the right auxiliary fuel tank. The override/jettison pump is installed on elliptical openings on the lower surface of the wings.
(2) The override/jettison pump is almost the same as the fuel boost pumps. The differences are:
(a) One override pump unit and one jettison pump unit (AMM 28-31-00/001) are installed in each housing of the override/jettison pump.
(b) The override pump operates at 11,400 revolutions per minute when supplied with 115 volt, 400 Hertz power. This gives a fuel flow of 25,000 pounds (11,340 kg) per hour and a pressure increase of 30 pounds per square inch (206 kPa).

K. Override Pump Unit
(1) The override pump unit has a three phase, 400 Hertz 115 volt ac electric motor, an impeller, and reprime element. The plug-in module is replaceable on the airplane without draining the fuel tank. A shutoff valve is automatically actuated when the pump unit is removed, and automatically opened when the pump unit is replaced. A handle is supplied to ease removal/installation.

L. Discharge Check Valve
(1) The discharge check valve assembly is a plug-in module containing a poppet type check valve. A coil spring provides proper cracking pressure. A handle is provided to ease removal/installation. Defueling is required for removal.

M. Motive Flow Screen and Valve
(1) The motive flow and screen check valve is a plug-in module containing a flapper type check valve, and replaceable screen filter. The module also contains a shutoff valve that allows the screen filter to be changed without draining the fuel tank. A handle is provided to ease removal/installation. Defueling is required for removal.

N. Boost Pump Vapor Vent Valve
(1) A vapor vent valve, provided for the boost pump pumping unit, allows circulation of fuel for pumping unit cooling. The cooling fuel passes through the pumping unit and discharges through the vent valve into the fuel tank. An integral check valve prevents fuel from entering the pump.

BOEING PROPRIETARY - Copyright (C) - Unpublished Work - See title page for details.

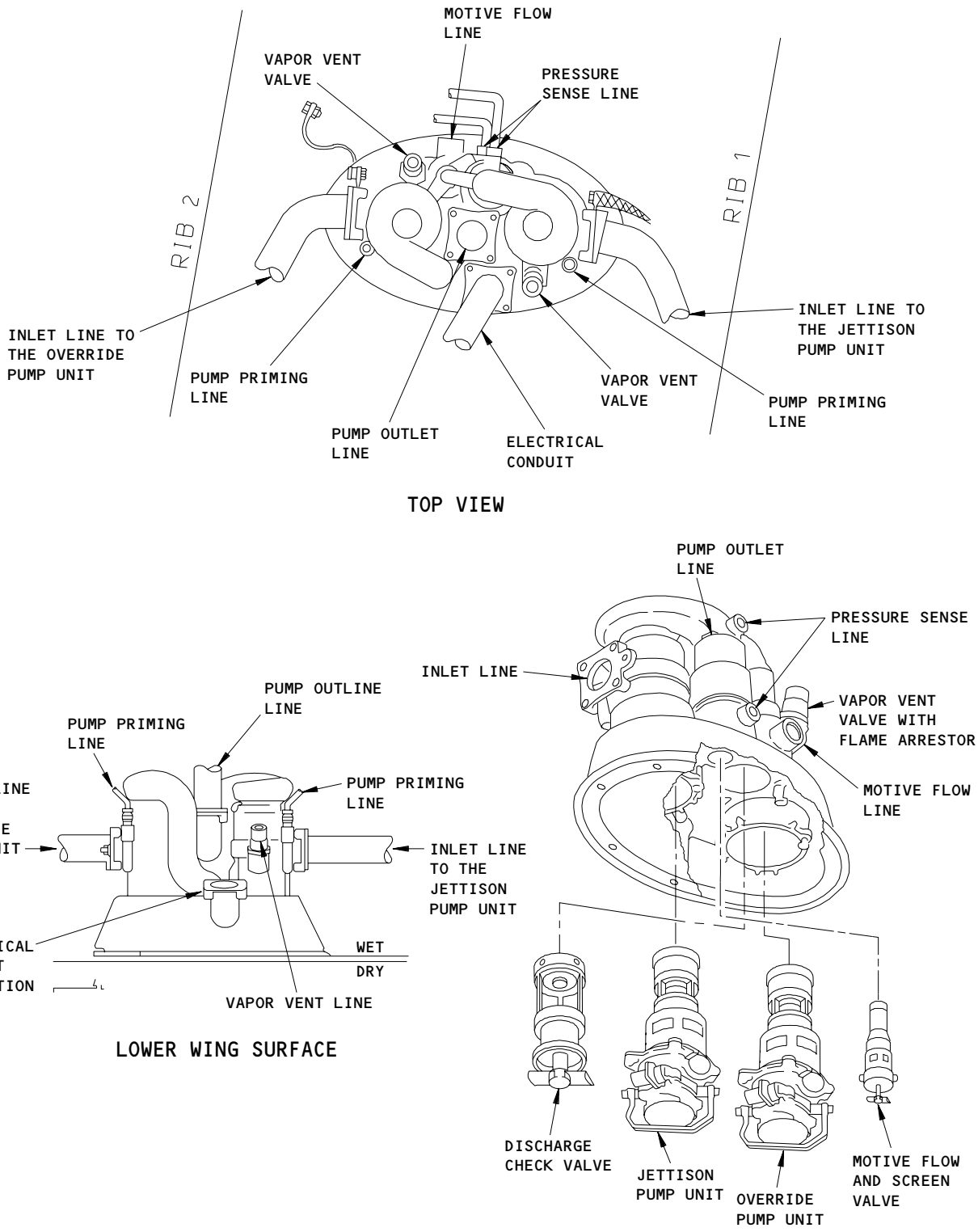

Override/Jettison Pump
Figure 6A

BOEING PROPRIETARY - Copyright (C) - Unpublished Work - See title page for details.

O. Override Pump Unit Operation (Fig. 7)

(1) The primary component of the override pump is the pumping unit. When supplied with 115 volt, 400 Hertz electrical power, the pumping unit runs at 11,400 revolutions per minute, providing a fuel flow of 25,000 pounds (11,340 kilograms) per hour and pressure rise of 30 psi (206 kPa).

(2) Pump output flow and pressure are controlled by engine demand. Because the pump is not a positive displacement unit, engine control settings throttle the pump output flow, and the pump delivers only as much fuel as the engine requires.

(3) The pump priming line supplies fuel into the pump housing during the refueling operation to make sure the pump primes.

(4) Flow begins with the impeller drawing fuel into the pump through the inlet port and past the inlet shutoff valve. The inlet shutoff valve is always open when the pumping unit operates. At the impeller, air, gases, and fuel pass through small holes in the impeller and motor shaft to the reprime element (liquid ring pump). Fuel discharge from the impeller is split; a small flow directed to the motive flow and screen valve, and a larger flow to the discharge check valve.

(5) The flow from the liquid ring reprime pump is used to cool the pumping unit motor, and to provide a fuel reservoir for the liquid ring element to reprime the impeller after short periods of dry running. The reprime pump expels cooling fuel, air, and gases through the motor cavity and out the vapor vent valve back to the fuel tank. The motor cavity, serving as the liquid ring reservoir, is also charged with fuel during fueling operations. Whenever pressure in the fueling lines exceeds a check valve cracking pressure by 2 to 8 psi (14 to 55 kPa), fuel is admitted to the liquid ring through the primary port.

(6) The flow into the motive flow and screen valve passes through the screen filter. It then passes through a flapper type check valve set at a cracking pressure of four inches of water. The flow then exits the motive flow and screen valve through the motive flow port to the fuel tank.

(7) The main impeller discharge flow is routed to the discharge check valve module. The module contains a poppet type discharge check valve that prevents back flow into the pumping unit. After passing the check valve, the discharge flow exits the module through the discharge port to the engine.

BOEING PROPRIETARY - Copyright (C) - Unpublished Work - See title page for details.

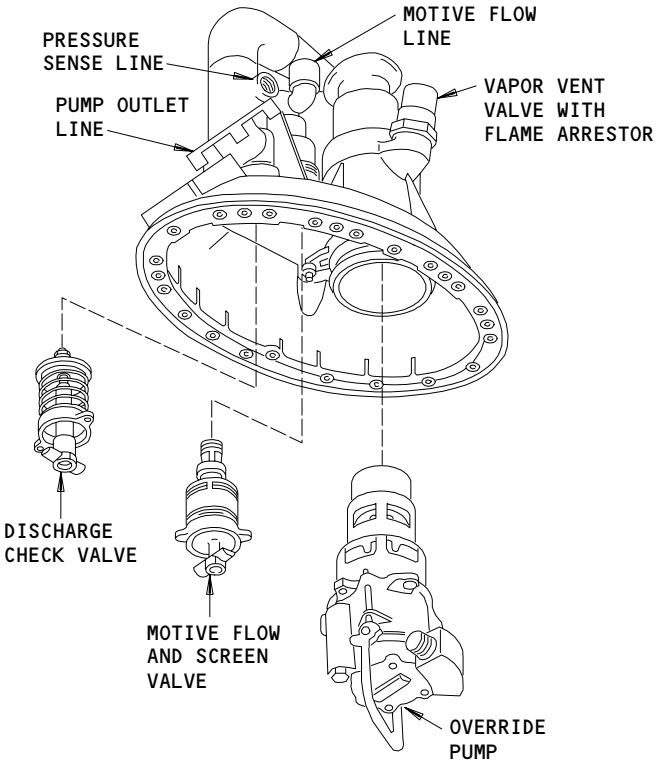

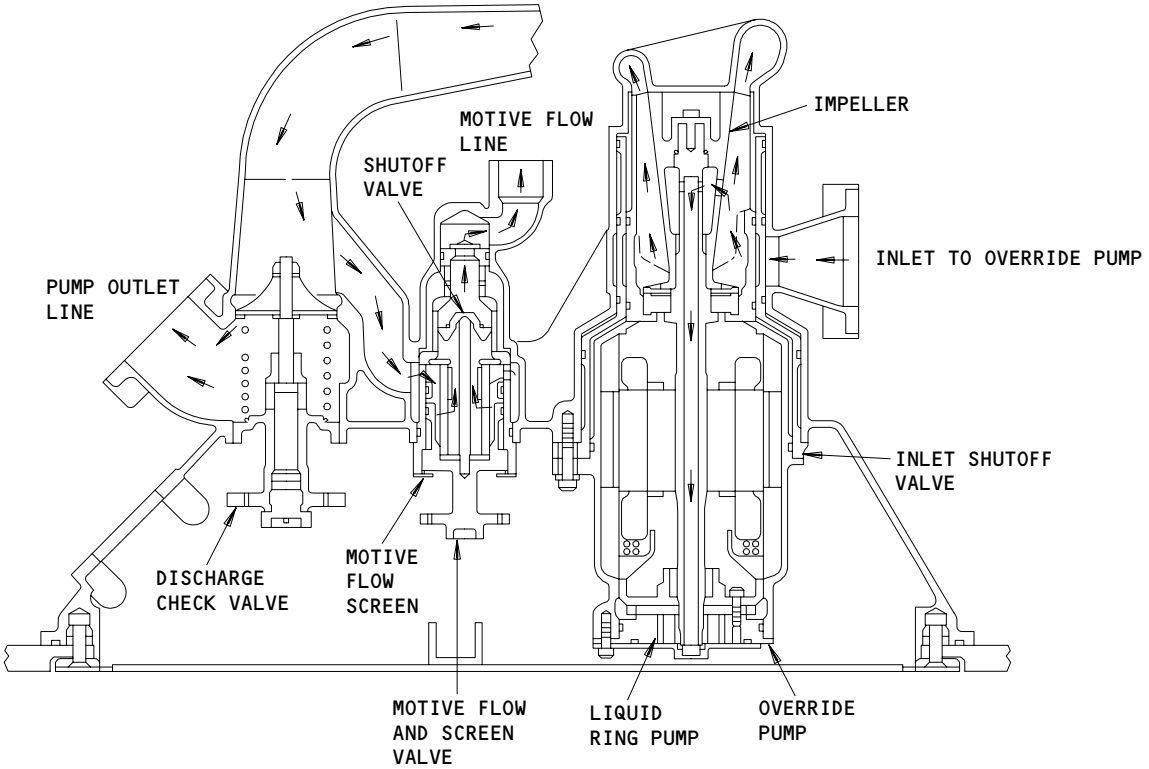

Override Pump Assembly Operation
Figure 7 (Sheet 1)

BOEING PROPRIETARY - Copyright (C) - Unpublished Work - See title page for details.

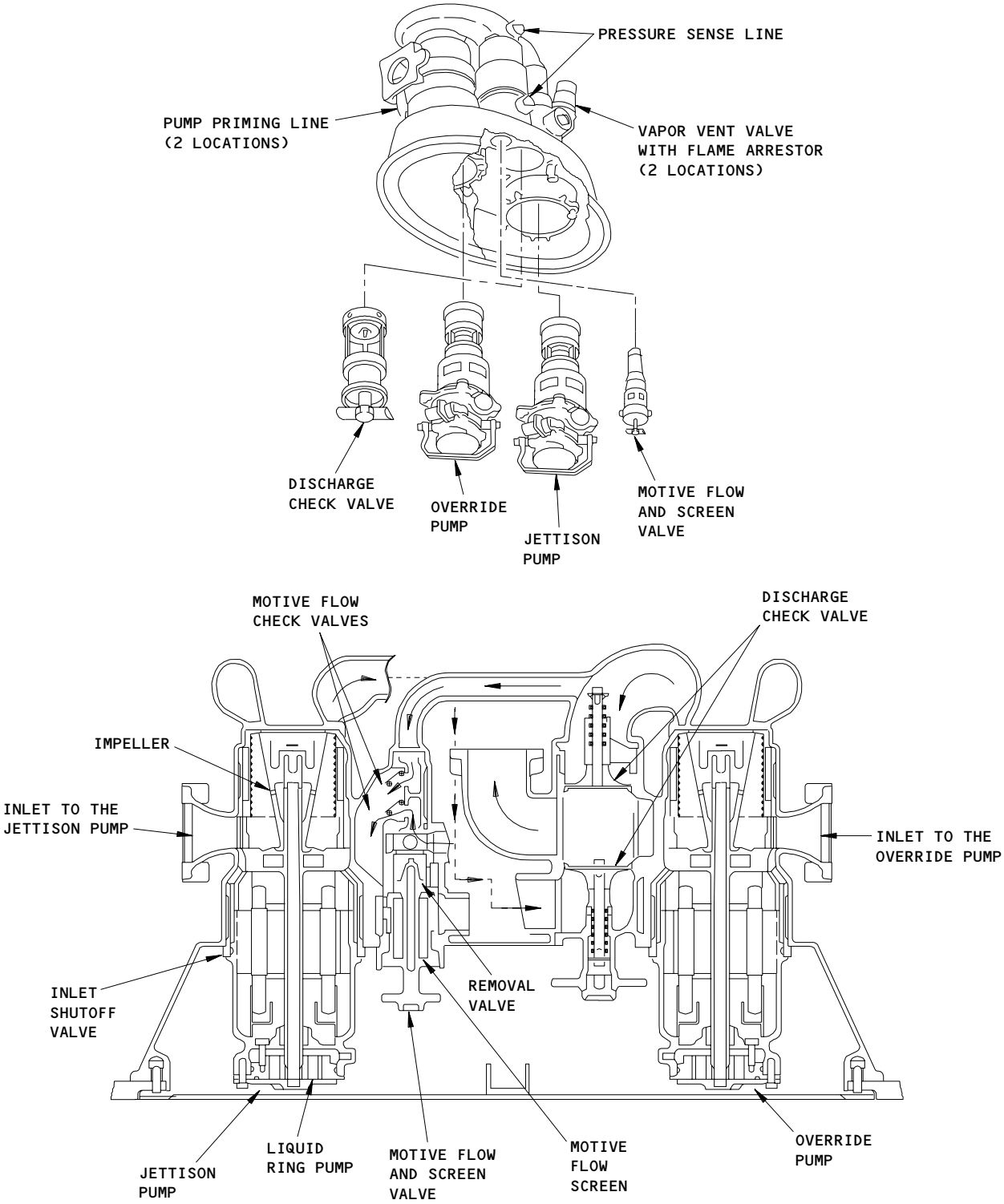

Override Pump Assembly Operation
Figure 7 (Sheet 2)

BOEING PROPRIETARY - Copyright (C) - Unpublished Work - See title page for details.

P. Automatic Sumping Jet Pumps (Fig. 8)

(1) There are eight jet pumps: two in each main fuel tank, and four in the auxiliary fuel tank. The two jet pumps in each main tank are installed on rib 3, and the jet pumps in the auxiliary fuel tank are installed on rib 2 and the side-of-body rib. All four jet pumps on each side are accessible from the one access door for the auxiliary fuel tank. For pump removal, defuel the auxiliary fuel tank.

(2) The jet pumps for the main fuel tank and the jet pumps on rib 2 for the auxiliary fuel tank have a housing and jet nozzle. The housing has five inlet ports with screened intakes. The intakes sit on the lower wing surface between the lower wing stringers. The housing also has a motive flow port which connects to the outflow port of the boost pumps, and a discharge port which empties all accumulated water close to the inlets for the fuel boost pumps.

(3) There are two identical scavenge jet pumps installed in the center compartment of the auxiliary fuel tank. The pumps are installed on the left and right side-of-body ribs. The three ports of the pump are the motive port, the induced port, and the discharge port. The motive flow is supplied by the applicable left or right fuel boost pumps for the main fuel tank. The scavenge fuel is discharged into the related left or right main fuel tank. A float-operated shutoff valve blocks this flow until the fluid level drops to approximately half full. The purpose of the installation is to scavenge fuel remaining below the level of the override pump intake.

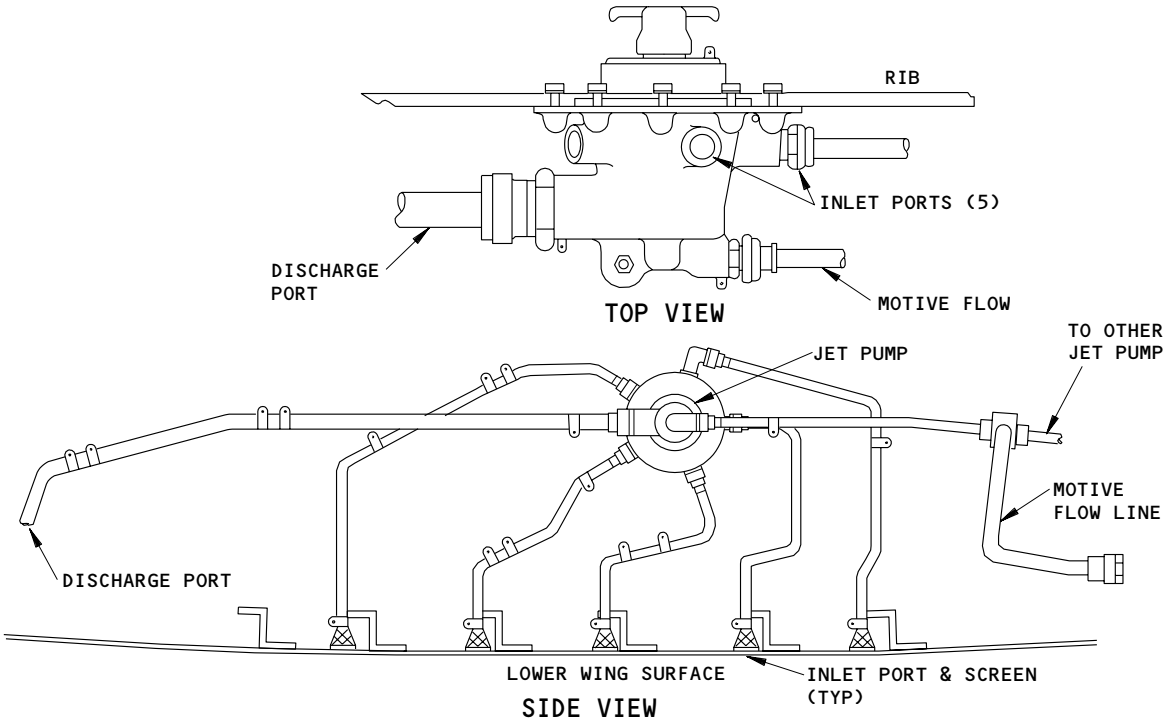

Automatic Sumping Jet Pumps
Figure 8

BOEING PROPRIETARY - Copyright (C) - Unpublished Work - See title page for details.

Q. Float-Operated Shutoff Valve (Fig. 8A)

(1) The float-operated shutoff valve is found in the main fuel tank next to the fuel boost pumps. The valve blocks the flow of the scavenge fuel and prevents it from being discharged into the related left or right main fuel tank until the fluid level drops to approximately half full.

R. Jet Pump Operation (Fig. 9)

(1) The jet pumps scavenge water and contaminant from trapped areas, at the inboard ends of the main and at the side of body rib in the auxiliary tank. The jet pumps operate automatically and continuously, powered by fuel motive flow whenever the fuel boost pumps operate. When the motive flow from the fuel boost pumps enters the jet pump, an orifice restricts flow through the nozzle. The motive flow exits the nozzle at high velocity causing reduced pressure at the nozzle. Scavenged fuel is drawn into the inlet ports and expelled through the discharge ports. The discharge ports for the automatic sumping jet pump empty close to the inlets for the fuel boost pumps. The scavenge jet pump empties into the main fuel tanks. The inlets for the fuel boost pumps pick up water in small amounts and send it to the engine rather than allowing it to accumulate and cause system malfunction or structural corrosion.

3. Operation (Fig. 10)

A. Functional Description

(1) Feed System Operation

(a) The engine fuel-feed system supplies fuel to the engines by direct tank to engine feed. Any fuel tank can supply fuel to any engine if the engine fuel crossfeed valve (referred to as "the crossfeed valve") is open.

(b) To get direct main fuel tank to respective engine feed, close the crossfeed valve and open the engine fuel shutoff valve (spar valve). Put the fuel boost pump switches on the fuel management panel at the overhead panel, P5, to ON. The fuel boost pump control relay actuates and supplies three phase power to the fuel boost pumps. The fuel boost pumps will draw fuel from the fuel tank through screened inlets and feed it to the engines through the engine fuel-feed manifold and engine fuel shutoff valves (spar valve).

BOEING PROPRIETARY - Copyright (C) - Unpublished Work - See title page for details.

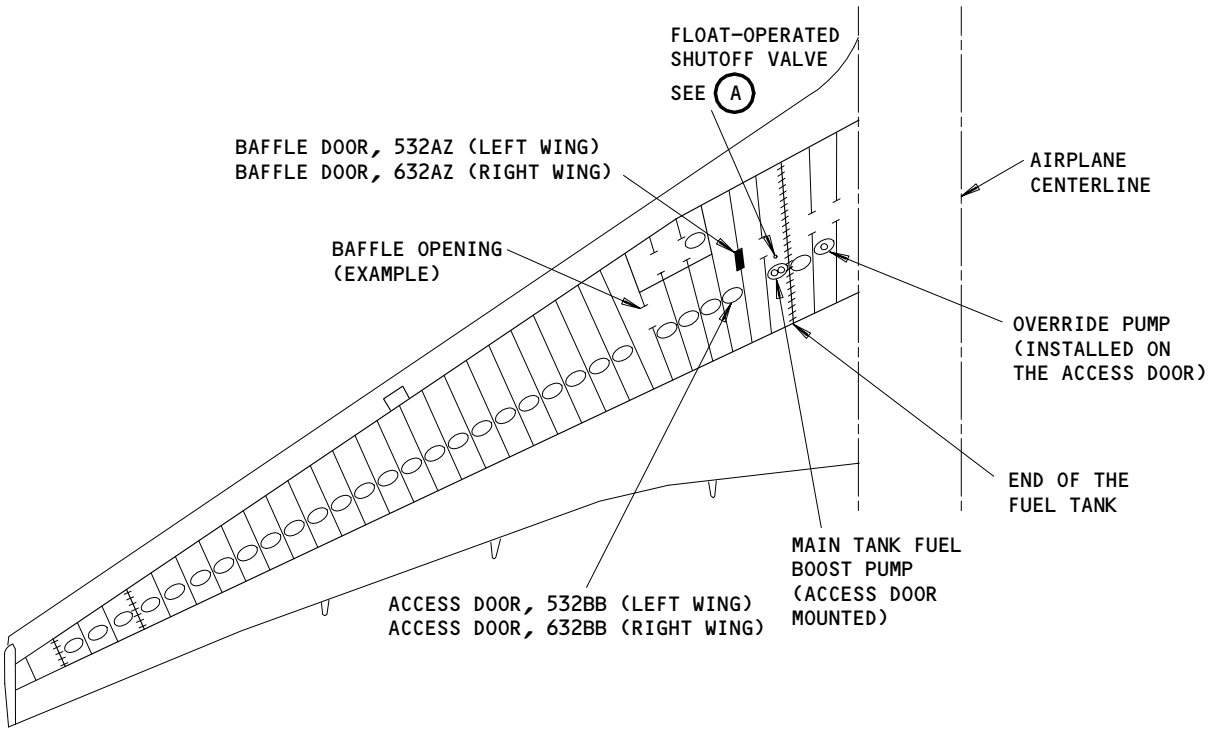

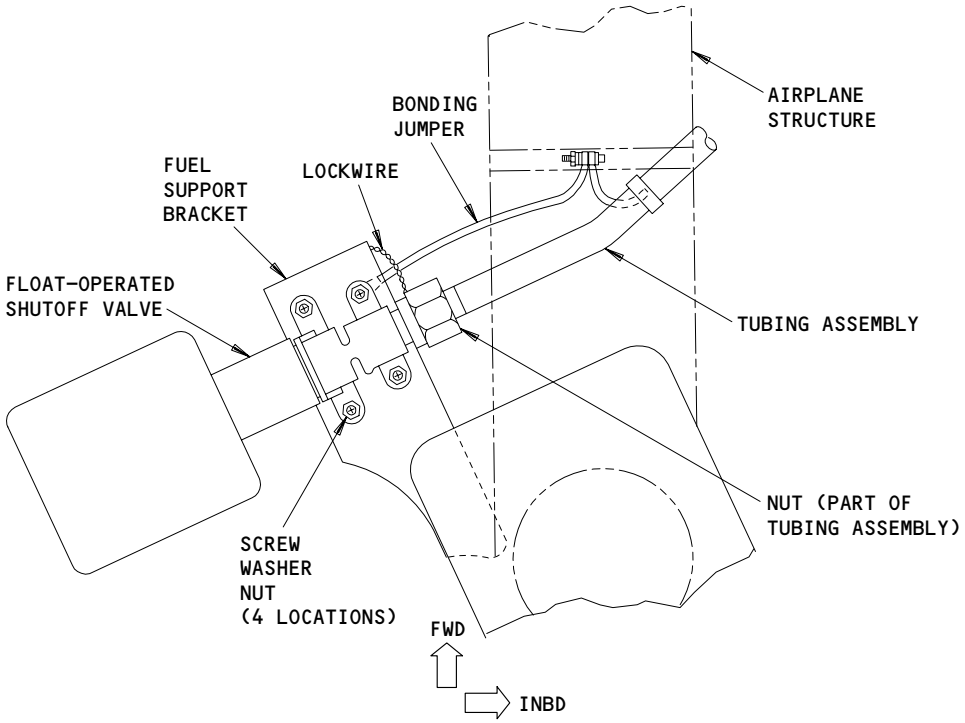

FLOAT-OPERATED SHUTOFF VALVE
(VIEW IN THE DOWN DIRECTION)

A

Float-Operated Shutoff Valve
Figure 8A

BOEING PROPRIETARY - Copyright (C) - Unpublished Work - See title page for details.

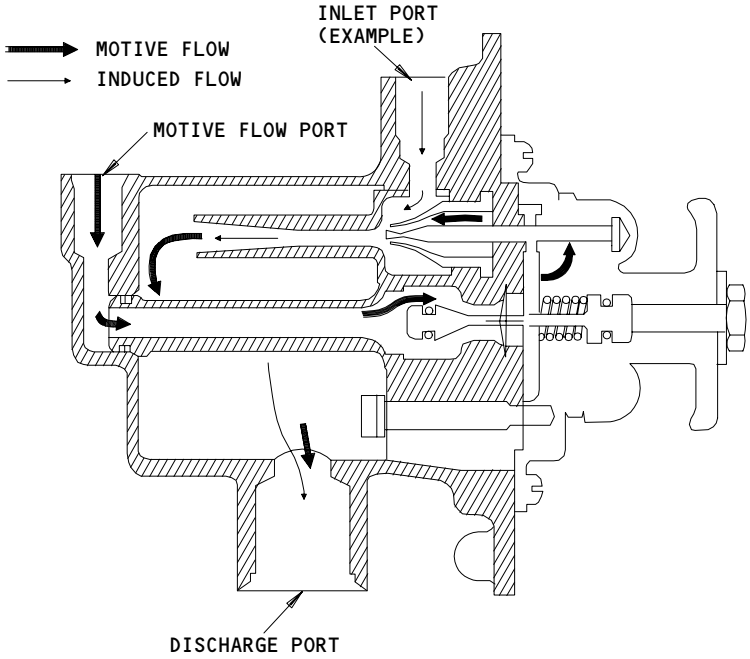

AUTOMATIC SUMPING JET PUMP

A

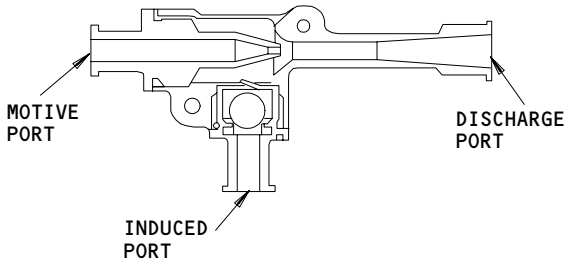

SCAVENGE JET PUMP

B

Jet Pump Operation
Figure 9

BOEING PROPRIETARY - Copyright (C) - Unpublished Work - See title page for details.

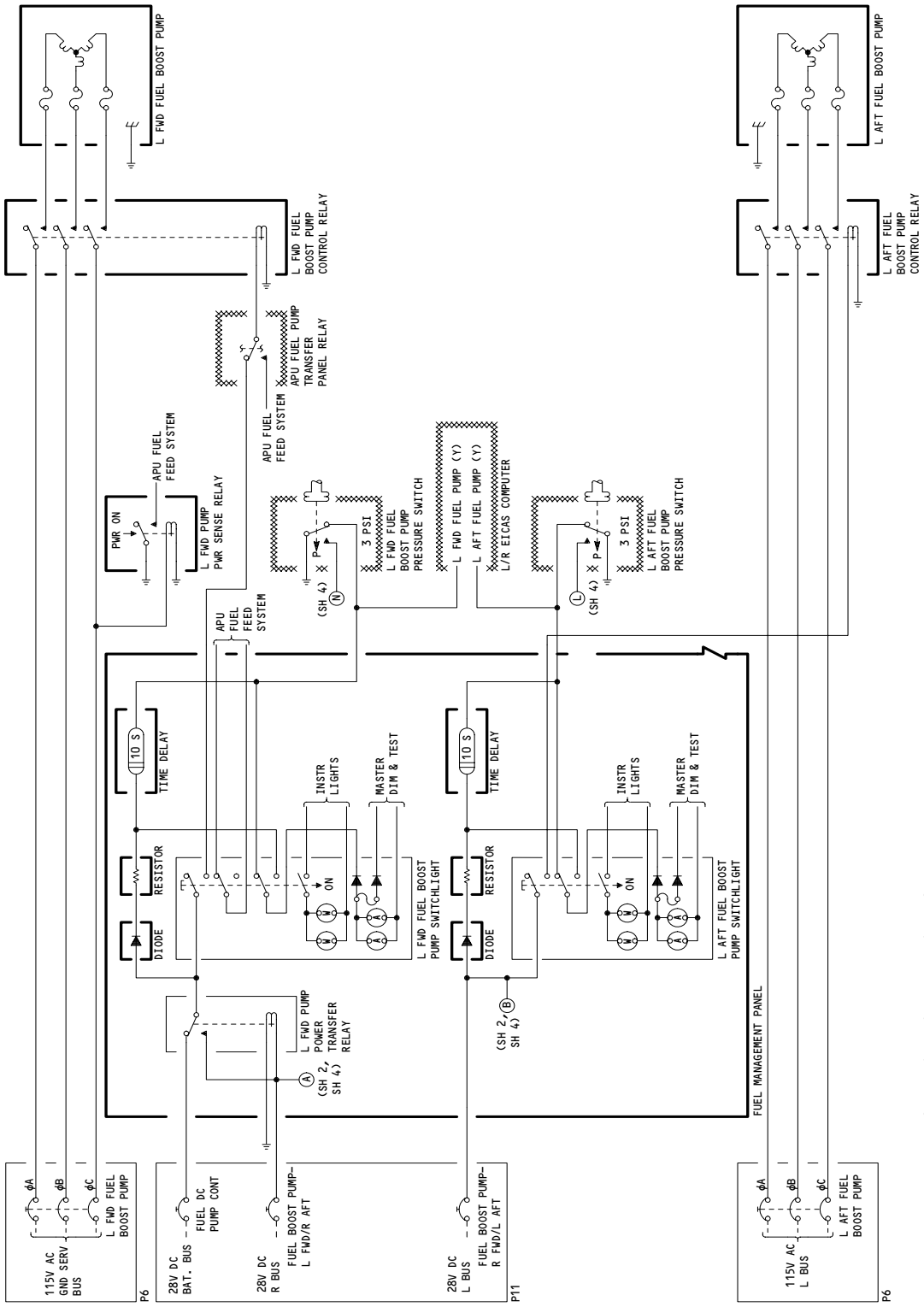

Engine Fuel Feed System Schematic
Figure 10 (Sheet 1)

BOEING PROPRIETARY - Copyright (C) - Unpublished Work - See title page for details.

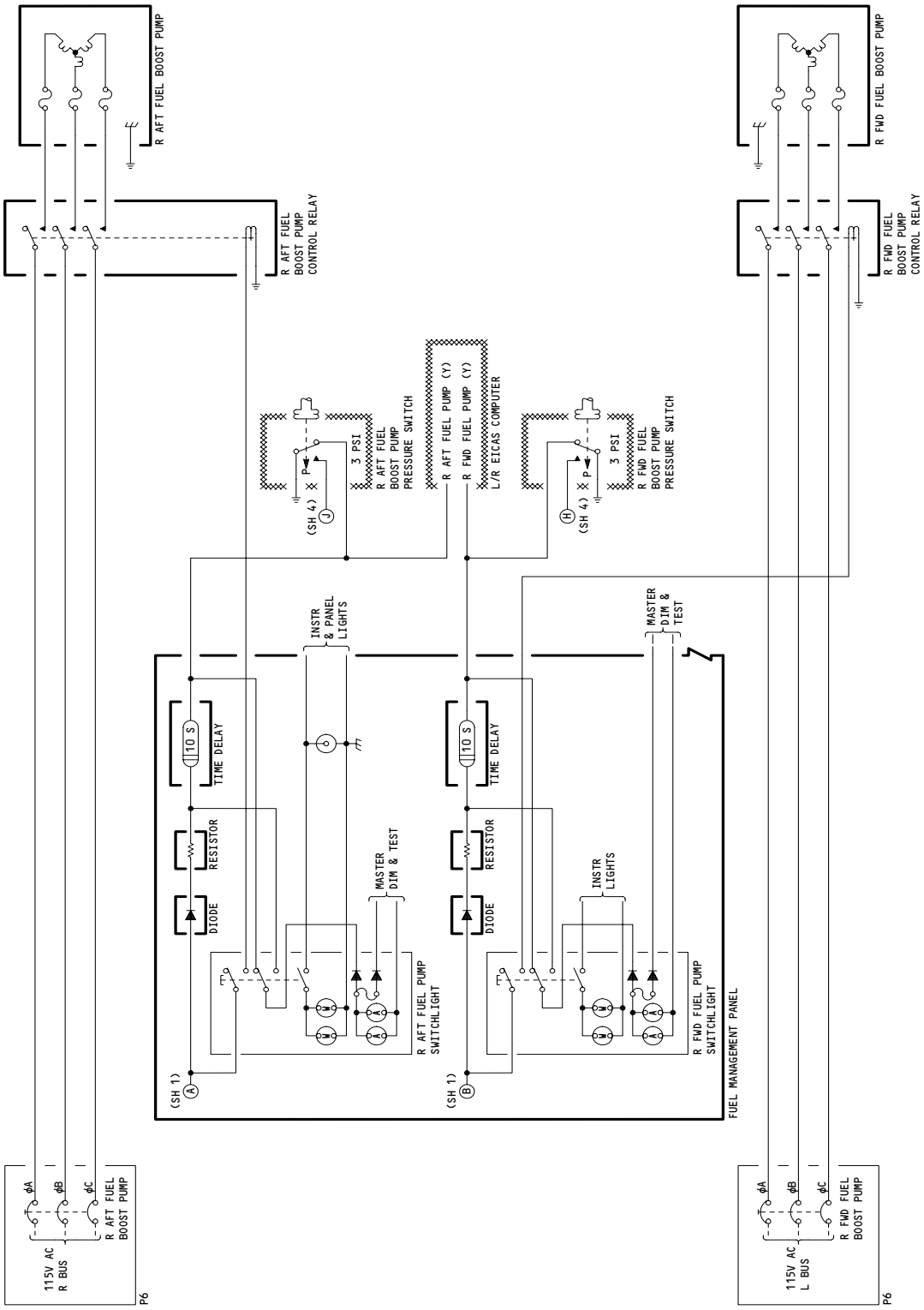

Engine Fuel Feed System Schematic
Figure 10 (Sheet 2)

BOEING PROPRIETARY - Copyright (C) - Unpublished Work - See title page for details.

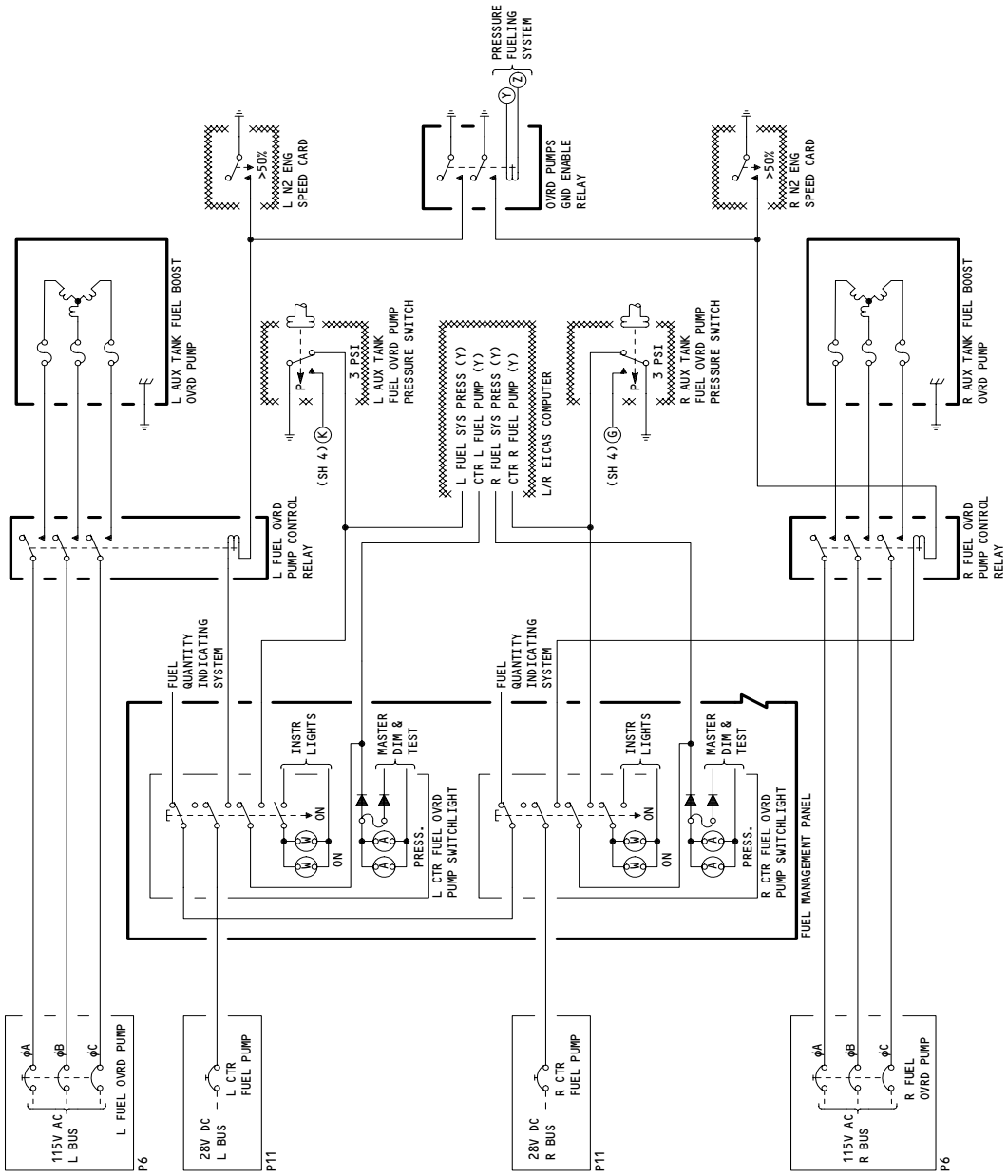

Engine Fuel Feed System Schematic
Figure 10 (Sheet 3)

BOEING PROPRIETARY - Copyright (C) - Unpublished Work - See title page for details.

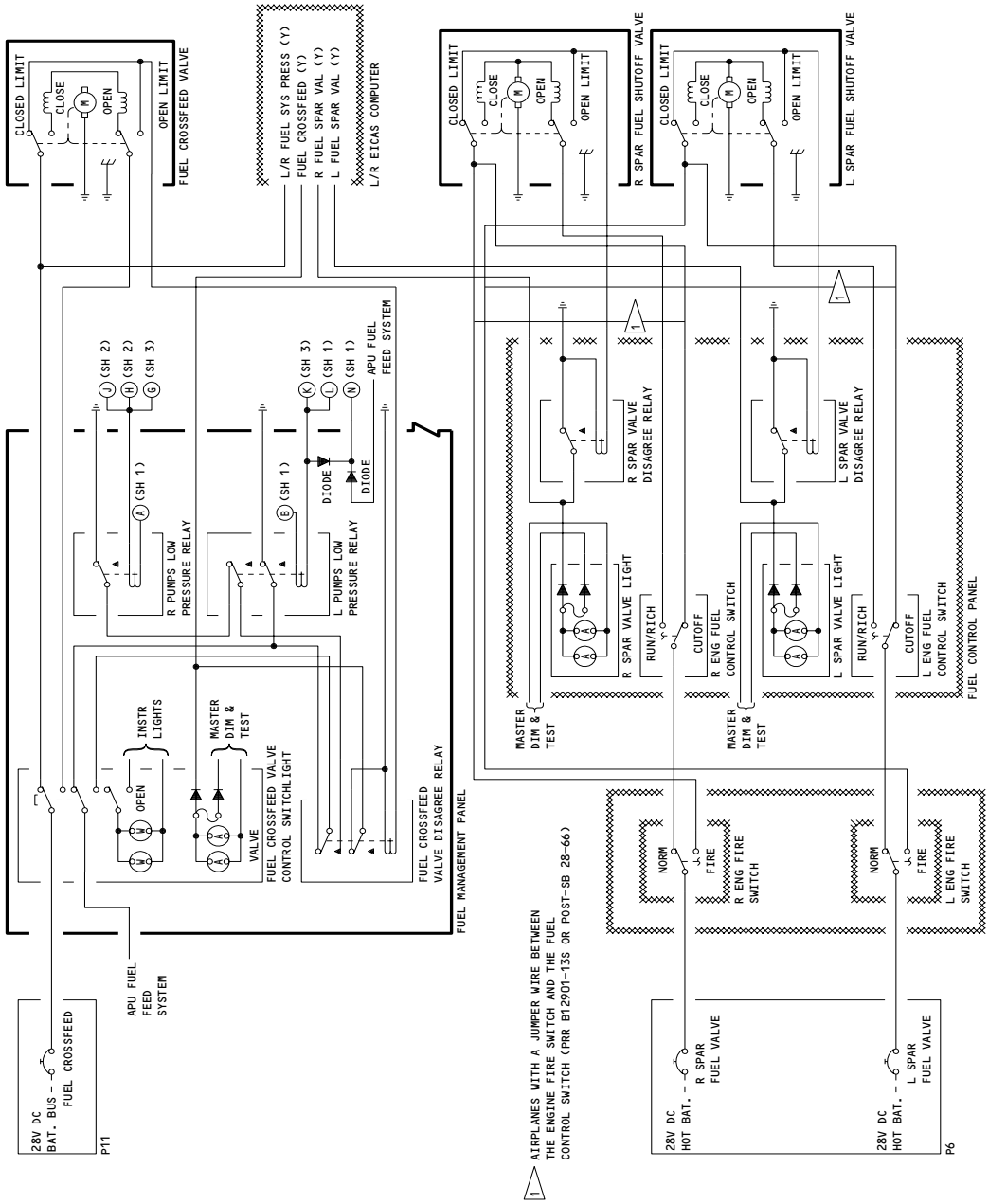

Engine Fuel Feed System Schematic
Figure 10 (Sheet 4)

BOEING PROPRIETARY - Copyright (C) - Unpublished Work - See title page for details.

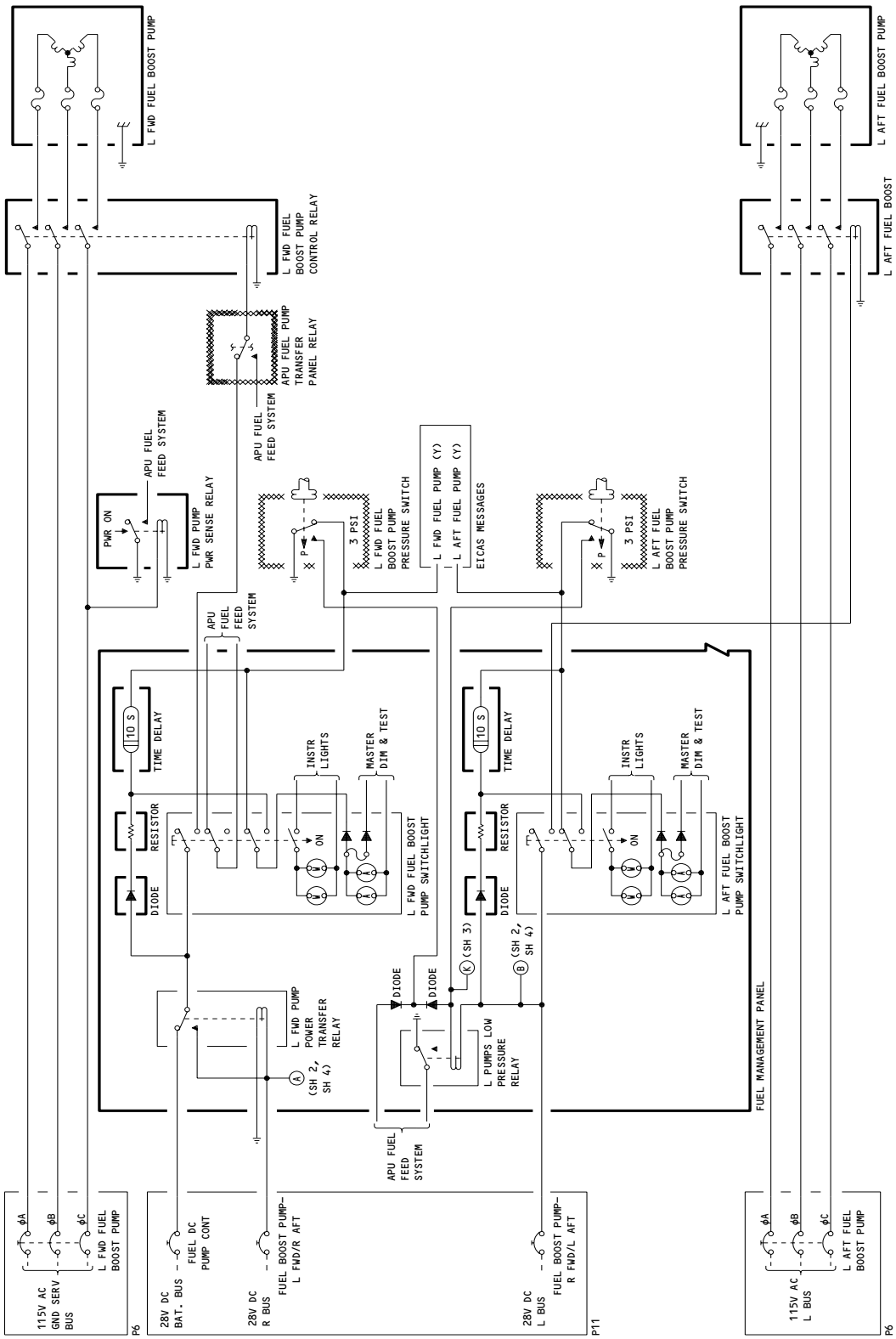

Engine Fuel Feed System Schematic
Figure 11 (Sheet 1)

A89006

BOEING PROPRIETARY - Copyright (C) - Unpublished Work - See title page for details.

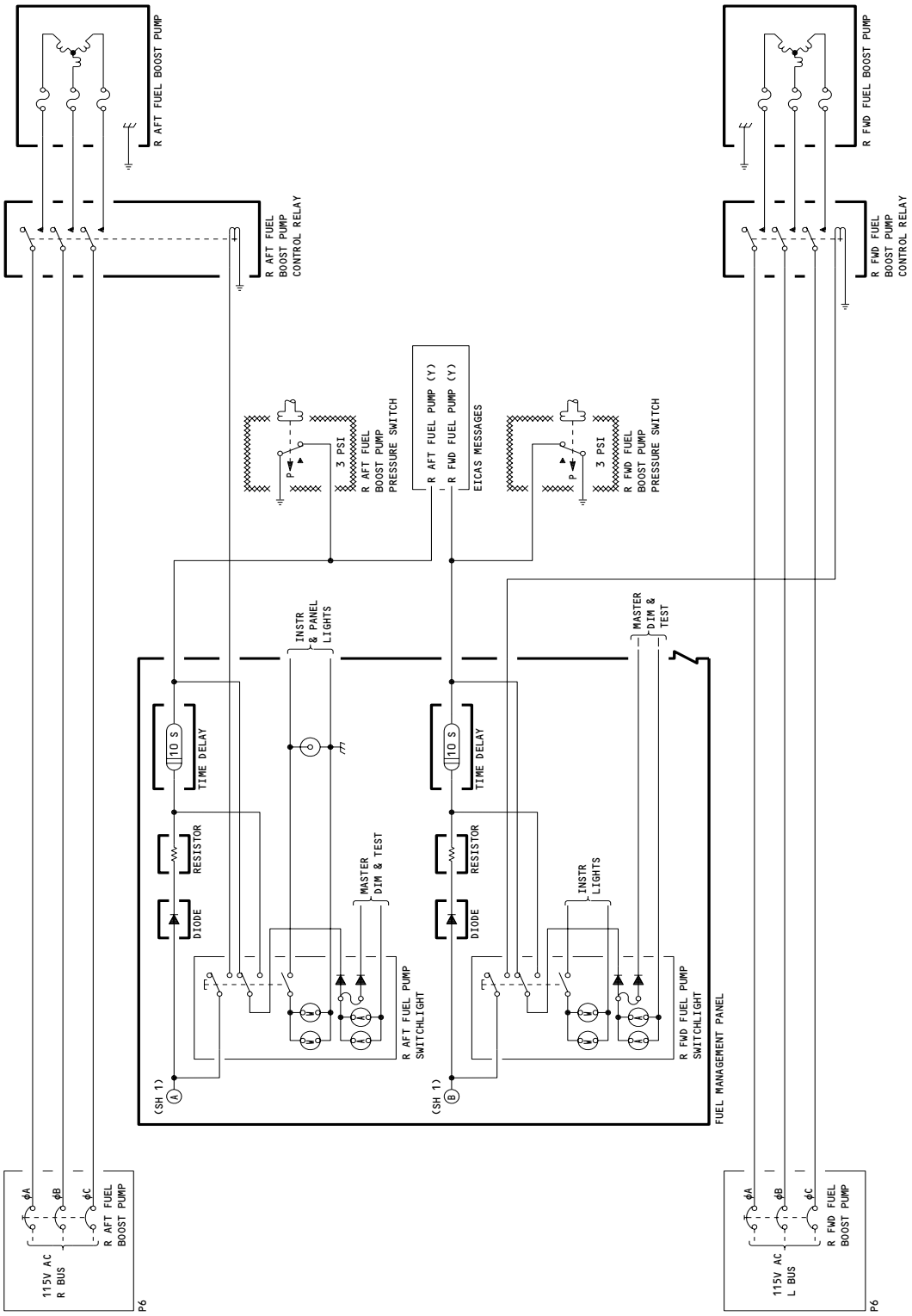

Engine Fuel Feed System Schematic
Figure 11 (Sheet 2)

A88983

BOEING PROPRIETARY - Copyright (C) - Unpublished Work - See title page for details.

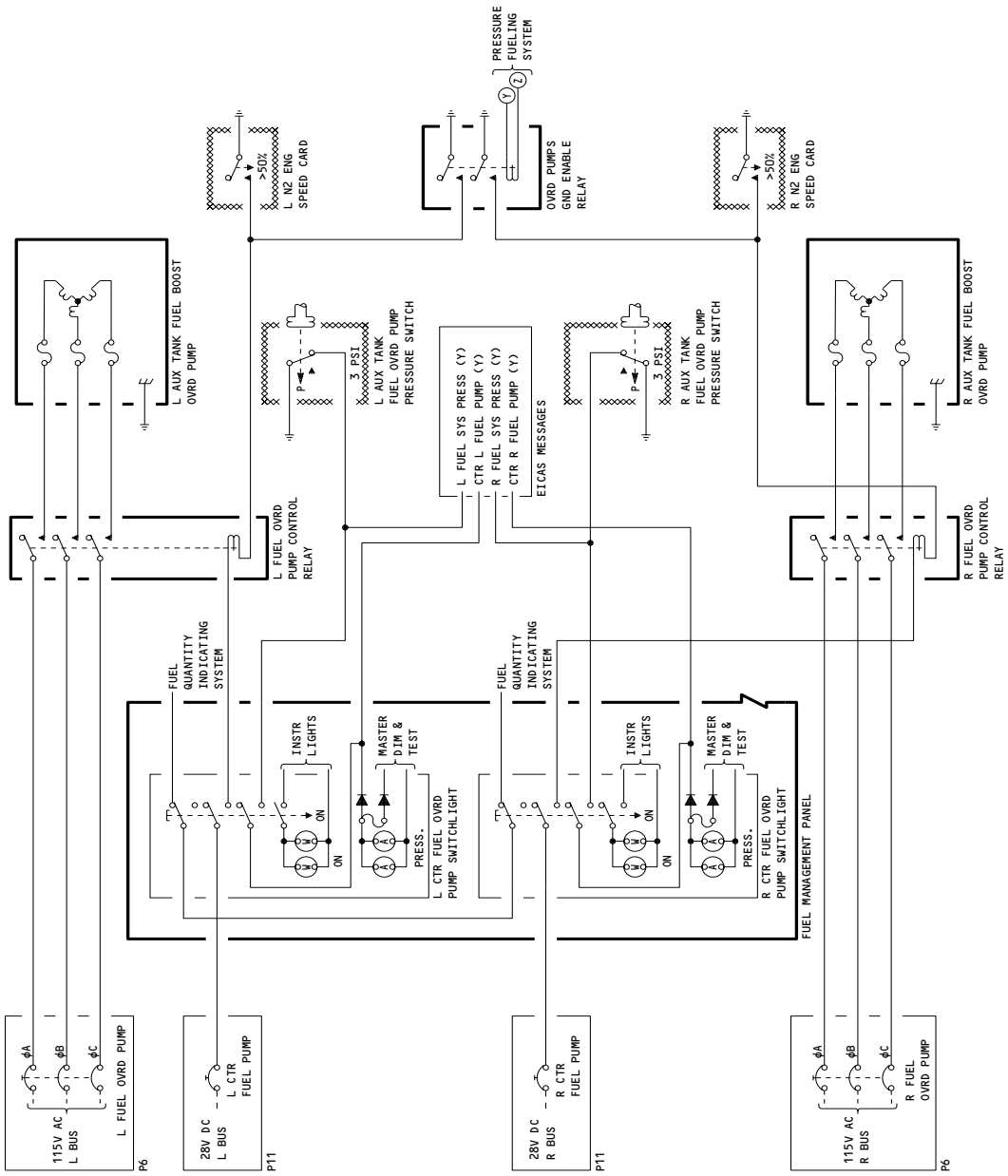

Engine Fuel Feed System Schematic
Figure 11 (Sheet 3)

A88986

BOEING PROPRIETARY - Copyright (C) - Unpublished Work - See title page for details.

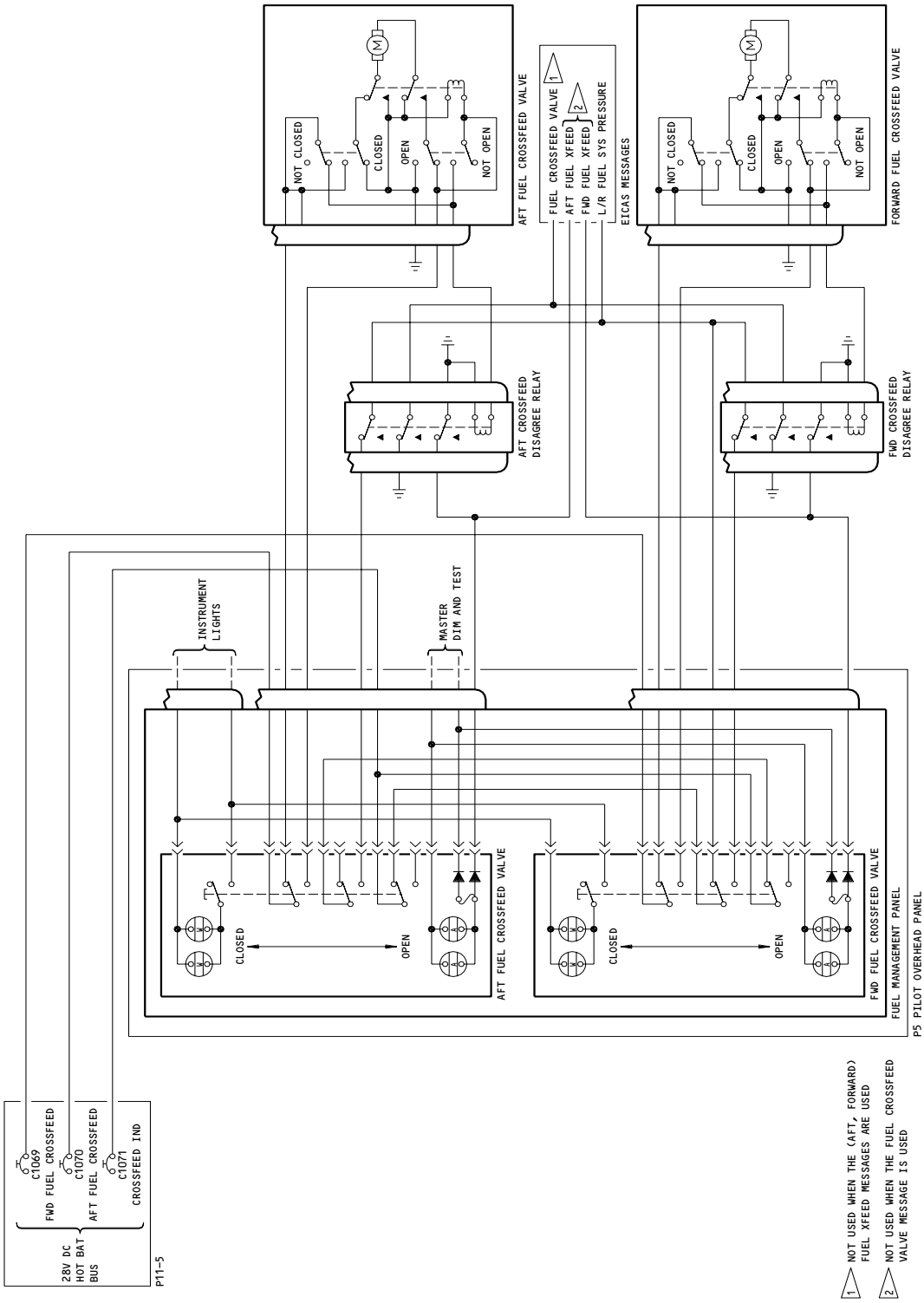

Engine Fuel Feed Schematic
Figure 11 (Sheet 4)

AB9152

BOEING PROPRIETARY - Copyright (C) - Unpublished Work - See title page for details.

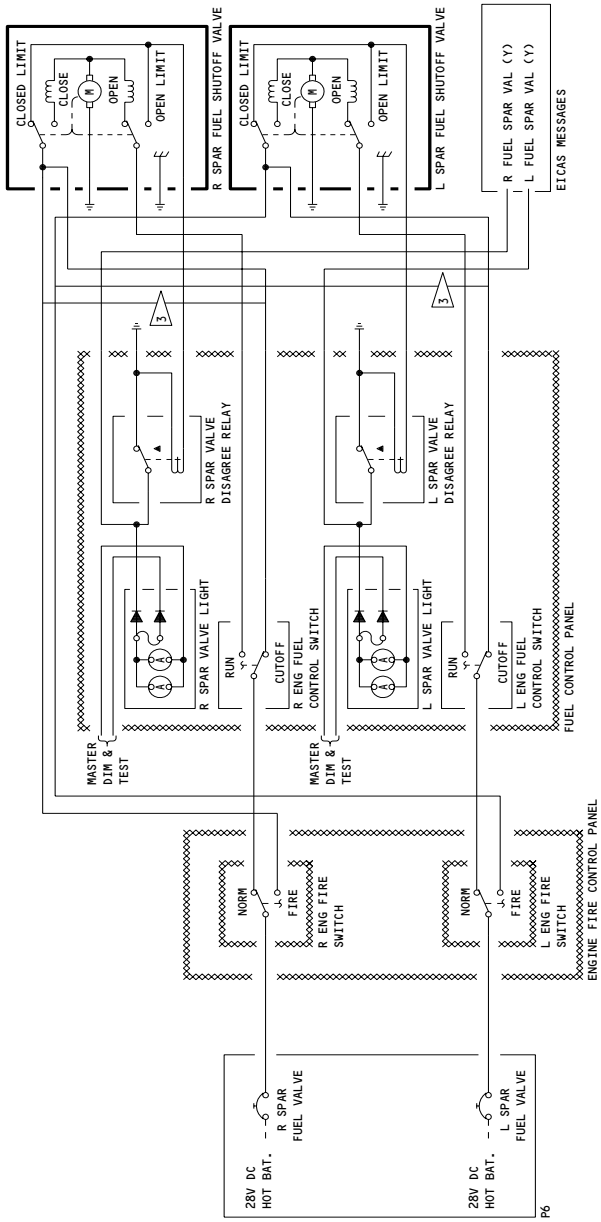

3 AIRPLANES WITH A JUMPER WIRE BETWEEN THE ENGINE FIRE SWITCH AND THE FUEL CONTROL SWITCH (PRR B12901-13S OR POST-SB 28-66)

Engine Fuel Feed System Schematic
Figure 11 (Sheet 5)

A89058

BOEING PROPRIETARY - Copyright (C) - Unpublished Work - See title page for details.

(c) Each fuel boost pump supplies motive flow pressure to a jet pump at the boost pump inlet. Fuel flow through the jet pump causes a flow of fuel and accumulated water from the sump area of the fuel tank to the jet pump and into the inlet for the fuel boost pump.

(d) If the fuel boost pumps become inoperative, the boost pump bypass valve, normally held closed by pressure from the fuel boost pumps, opens. Suction developed by the engine driven fuel pumps draws fuel from the tank through the bypass valve to the engine.

(e) When the fuel boost pumps are shut down, the APU DC fuel pump provides fuel for starting the APU. When the APU starts, the left forward fuel boost pump starts automatically and provides fuel for the APU.

(2) Engine Fuel Shutoff Valve (Spar Valve) Actuation

(a) The engine fuel control switch and SPAR VALVE light on the P10 quadrant stand control and monitor the engine fuel shutoff valve (spar valve).

(b) When the engine fuel control switch is placed in the RUN position, current flows from the hot battery bus. The current passes through the fire switch, set to NORMAL, and the engine fuel control switch to the engine fuel shutoff valve actuator. At the actuator, current passes through the closed OPEN-LIMIT switch, the open field coil, and actuator armature to ground. The actuator then drives to the open position. The CLOSE LIMIT switch opens just after the actuator starts driving to the open position, and when the actuator reaches the open position, the OPEN LIMIT switch opens and de-energizes the actuator.

(c) To close the actuator; current flows from the hot battery bus, through the fire switch in the NORMAL position, the engine control switch in the CUTOFF position, to the actuator. At the actuator, current passes through the closed CLOSE LIMIT switch, the close field coil, and the armature to ground. The actuator then drives to the close position. The OPEN LIMIT switch opens just after the actuator starts driving to the close position, and when the actuator reaches the close position, the CLOSE LIMIT switch opens.

(3) "Spar Valve" Disagreement Light

(a) The amber SPAR VALVE warning light on the P10 quadrant stand is a disagreement light and illuminates when the commanded position of the engine fuel control switch differs from the position of the engine fuel shutoff valve actuator. The Engine Indicating and Crew Alerting System (EICAS) also receives this signal and displays a message of L FUEL SPAR VALVE, or R FUEL SPAR VALVE as appropriate.

BOEING PROPRIETARY - Copyright (C) - Unpublished Work - See title page for details.

(4) Crossfeed Valve Actuation
  (a) If you open the crossfeed valve(s) (usually closed), fuel can flow to any engine from any tank.
    1) When the crossfeed valve switch/light(s) on the fuel management panel is switched to OPEN, current flows from the circuit breaker, through the selected OPEN switch contacts, to the valve actuator. At the actuator, current passes through the closed OPEN LIMIT switch, the actuator open field coil, and the actuator armature to ground. The actuator then drives to the open position. The CLOSE LIMIT switch opens just after the actuator starts driving to the open position, and when the actuator reaches the open position, the OPEN LIMIT switch opens and de-energizes the actuator.
    2) To close the crossfeed valve(s), push the CROSSFEED switch/light(s). Current flows from the circuit breaker, through the selected switch/light contacts, to the valve actuator. At the actuator, current passes through the closed, CLOSE LIMIT switch, the actuator close field coil, and the actuator armature to ground. The actuator then drives to the close position. The OPEN LIMIT switch opens just after the actuator starts driving to the close position, and when the actuator reaches the close position, the CLOSE LIMIT switch opens and de-energizes the actuator.
(5) Crossfeed Valve Disagreement Light
  (a) The lower half of the crossfeed valve switch/light(s) is an amber disagreement warning light. The light comes on when the commanded position of the switch/light, disagrees with the position of the valve actuator. EICAS also receives this signal and shows the message, FUEL CROSSFEED or (FWD,AFT) FUEL XFEED.
(6) Fuel Boost Pump and Override Pump Control
  (a) The fuel boost pumps and override pumps operate on 3-phase 115 volt 400 Hertz power, and are controlled by 28VDC circuits.
  (b) Different busses supply the power to minimize the loss of power to all pumps on one side of the airplane at the same time.
  (c) All pumps operate in the manual mode except the left forward fuel boost pump which also operates in an automatic mode. In the manual mode the switch/lights on the fuel management panel control the fuel boost pumps and override pumps. Putting a switch/light to ON energizes the applicable pump control relay and 3-phase power passes through the relay contacts and operates the pump motor.
  (d) Override pump operation is inhibited by a closed fueling station door or engine N2 less than 50 percent.
(7) Left Forward Boost Pump Control
  (a) The left forward fuel boost pump operates in the same manner as the other pumps for manual operation.

BOEING PROPRIETARY - Copyright (C) - Unpublished Work - See title page for details.

(b) During automatic operation, with the left forward fuel boost pump switched off and the APU starting or operating, the APU fuel control relay energizes. With 115 VAC power available at the left forward fuel pump control relay, the left forward pump power sense relay energizes. Current then flows from the battery bus through the APU fuel control relay contacts to the APU fuel pump transfer relay coil. Current continues to ground via contacts of left forward pump start relay and contacts of left forward pump power sense relay. The APU fuel pump transfer relay energizes and supplies power to the left forward fuel boost pump control relay coil. Three phase, 115 AC power then flows through the left forward fuel boost pump control relay contacts and drives the left forward fuel boost pump.

(c) Each boost and override pump has a pressure switch which relaxes when pump pressure is below 3 psi. When released a ground is provided for the amber pressure switchlight on the fuel management panel. EICAS also receives a signal and displays the appropriate message.

(8) AIRPLANES WITH OVERRIDE PUMP AUTOMATIC SHUTOFF;
Override Pump Automatic Shutoff

(a) The two override pumps have an automatic shutoff function.

(b) The automatic shutoff function will relax the applicable override pump control relay after a time delay of 15 seconds from when low override pump pressure is detected by the pressure switch. When the override pump control relay is not energized, the override pump no longer receives power.

B. Control

(1) Supply electrical power (AMM 24-22-00/201).

(2) Check that the following main power distribution panel P6 circuit breakers are closed:

(a) 6E1, FUEL VALVES L SPAR
(b) 6E2, FUEL VALVES R SPAR
(c) 6F15, L FUEL OVRD PUMP
(d) 6F21, R FUEL OVRD PUMP
(e) 6G15, L AFT FUEL BOOST PUMP
(f) 6G18, R FWD FUEL BOOST PUMP
(g) 6G21, R AFT FUEL BOOST PUMP
(h) 6G24, L FWD FUEL BOOST PUMP

(3) Check that the following overhead panel P11 circuit breakers are closed:

(a) AIPLANES WITH A SINGLE FUEL CROSSFEED VALVE;
11D36, CROSSFEED VALVE

(b) AIRPLANES WITH FORWARD AND AFT FUEL CROSSFEED VALVES;
11M20 FWD CROSSFEED VALVE
11M21 AFT CROSSFEED VALVE
11D36 CROSSFEED IND

BOEING PROPRIETARY - Copyright (C) - Unpublished Work - See title page for details.

(c) 11M15, L CTR FUEL PUMPS
(d) 11M16, FUEL PUMP R FWD/L AFT
(e) 11M25, FUEL PUMP L FWD/R AFT
(f) 11M24, R CTR FUEL PUMPS

(4) To get direct tank to engine feed, proceed as follows:
(a) Put the fuel control switch on quadrant stand P10 to RUN.
(b) Put the fuel boost pump, or override pump switch on pilot's overhead panel P5 to ON.

(5) To get tank to opposite engine feed, proceed as follows:
(a) Put the fuel control switch on quadrant stand P10 to RUN.
(b) Put the crossfeed valve control switch(es) on the pilots overhead panel, P5, to open (white flow bar visible).
(c) Put the fuel boost pump switch on pilots overhead panel P5 to ON.

(6) Put the boost pump control switch to the OFF position.
(7) Put the crossfeed valve control switch(es) to the closed position.
(8) Put the fuel control switch to the CUTOFF position.

BOEING PROPRIETARY - Copyright (C) - Unpublished Work - See title page for details.

ENGINE FUEL-FEED SYSTEM

COMPONENT	FIG. 102 SHT	QTY	ACCESS/AREA	AMM REFERENCE
ACTUATOR - AFT ENGINE FUEL CROSSFEED VALVE, V389 [4]	3	1	LEFT WHEEL WELL	28-22-12
ACTUATOR - ENGINE FUEL CROSSFEED VALVE, V24 [3]	3	1	LEFT WHEEL WELL	28-22-12
ACTUATOR - FWD ENGINE FUEL CROSSFEED VALVE, V388 [4]	3	1	LEFT WHEEL WELL	28-22-12
ACTUATOR - L ENGINE FUEL SHUTOFF VALVE (SPAR VALVE), V25	3	1	551TB	28-22-11
ACTUATOR - R ENGINE FUEL SHUTOFF VALVE (SPAR VALVE), V26	3	1	651TB	28-22-11
CIRCUIT BREAKER -	1		FLT COMPT, P6	
L AFT FUEL BOOST PUMP (3ϕ), C366		1	6G15	*
L FUEL OVRD PUMP (3ϕ), C369		1	6F15	*
L FWD FUEL BOOST PUMP (3ϕ), C372		1	6G24	*
L SPAR FUEL VALVES, C1061		1	6E1	*
R AFT FUEL BOOST PUMP (3ϕ), C371		1	6G21	*
R FUEL OVRD PUMP (3ϕ), C370		1	6F21	*
R FWD FUEL BOOST PUMP (3ϕ), C368		1	6G18	*
R SPAR FUEL VALVES, C1062		1	6E2	*
CIRCUIT BREAKER -	1		FLT COMPT, P11	*
AFT CROSSFEED VALVE, C1070 [4]		1	11M21	*
CROSSFEED IND, C1071 [4]		1	11D36	*
FUEL CROSSFEED VALVE, C1051 [3]		1	11D36	*
FUEL PUMPS L FWD/R AFT, C1055		1	11M25	*
FUEL PUMPS R FWD/L AFT, C1054		1	11M16	*
FWD CROSSFEED VALVE, C1069 [4]		1	11M20	*
L CTR FUEL PUMPS, C1049		1	11M15	*
R CTR FUEL PUMPS, C1050		1	11M24	*
LIGHT - SPAR VALVE, YAZL1	3	1	FLT COMPT, P10, FUEL CONTROL PANEL, M73 (REF)	*
LIGHT - SPAR VALVE, YAZL3	3	1	FLT COMPT, P10, FUEL CONTROL PANEL, M73 (REF)	*
PANEL - (FIM 76-11-00/101) FUEL CONTROL, M73				
PANEL - FUEL MANAGEMENT, M10055	3	1	P5, FLT DECK	*
PUMP - AUTOMATIC SUMPING JET	2	6	531BB, 631BB	28-22-06
PUMP - L AFT FUEL BOOST, M333	2	1	532AB	28-22-03
PUMP - L FWD FUEL BOOST, M332	2	1	532AB	28-22-03
PUMP - L OVERRIDE, M636 [1]	4	1	531AB	28-22-05
PUMP - L OVERRIDE, M636 [2]	2	1	531AB	28-22-05
PUMP - R AFT FUEL BOOST, M335	2	1	632AB	28-22-03
PUMP - R FWD FUEL BOOST, M334	2	1	632AB	28-22-03
PUMP - R OVERRIDE, M637 [1]	4	1	631AB	28-22-05
PUMP - R OVERRIDE, M637 [2]	2	1	631AB	28-22-05
PUMP - SCAVENGE JET	4	2	531BB, 631BB	28-22-13

* SEE THE WDM EQUIPMENT LIST

[1] SAS 150, 152-154 POST-SB 28-27;
SAS 052-149, 155-161, 165-999;
MTH 275 POST-SB 28-27;
MTH 277-999

[2] SAS 150, 152-154 PRE-SB 28-27;
SAS 050, 051, 162-164;
MTH 275 PRE-SB 28-27;
MTH 276

[3] SAS 050, 051, 150-167 PRE-SB 28-34;
MTH 275-280 PRE-SB 28-34

[4] SAS 050, 051, 150-167 WITH SB 28-34;
SAS 052-149, 168-999;
MTH 275-280 POST-SB 28-34;
MTH 281-999

Engine Fuel-Feed System - Component Index
Figure 101 (Sheet 1)

BOEING PROPRIETARY - Copyright (C) - Unpublished Work - See title page for details.

COMPONENT	FIG. 102 SHT	QTY	ACCESS/AREA	REFERENCE
RELAY - FUEL CROSSFEED VALVE DISAGREE, K1 [3]		1	FLT COMPT, P5, M10055	*
RELAY - L FWD PUMP PWR XFR, K4		1	FLT COMPT, P5	28-22-00
RELAY - L SPAR VALVE DISAGREE, K1		1	FLT COMPT, P10, M73	*
RELAY - R SPAR VALVE DISAGREE, K2		1	FLT COMPT, P10, M73	*
AFT FUEL CROSSFEED VALVE DISAGREE, K2151 [4]		1		*
FWD FUEL CROSSFEED VALVE DISAGREE, K2152 [4]		1		*
RELAY - (FIM 31-01-33/101)				
L FWD PUMP PWR SENSE, K513				
L FWD FUEL BOOST PUMP CONT, K188				
RELAY - (FIM 31-01-36/101)				
L AFT FUEL BOOST PUMP CONT, K187				
L FUEL OVRD PUMP CONT, K329				
OVRD PUMPS GND ENABLE, K633				
R FWD FUEL BOOST PUMP CONT, K190				
RELAY - (FIM 31-01-37/101)				
R AFT FUEL BOOST PUMP CONT, K189				
R FUEL OVRD PUMP CONT, K330				
SWITCH - AFT FUEL CROSSFEED VALVE, YCLS7 [4]	3	1	FLT COMPT, P5, FUEL MANAGEMENT PANEL, M10055	*
SWITCH - FUEL CROSSFEED VALVE, YCLS7 [3]	3	1	FLT COMPT, P5, FUEL MANAGEMENT PANEL, M10055	*
SWITCH - FWD FUEL CROSSFEED VALVE, YCLS8 [4]	3	1	FLT COMPT, P5, FUEL MANAGEMENT PANEL, M10055	*
SWITCH - L AFT FUEL BOOST PUMP, YCLS4	3	1	FLT COMPT, P5, FUEL MANAGEMENT PANEL, M10055	*
SWITCH - L FWD FUEL BOOST PUMP, YCLS2	3	1	FLT COMPT, P5, FUEL MANAGEMENT PANEL, M10055	*
SWITCH - L OVRD PUMP, YCLS6	3	1	FLT COMPT, P5, FUEL MANAGEMENT PANEL, M10055	*
SWITCH - R AFT FUEL BOOST PUMP, YCLS1	3	1	FLT COMPT, P5, FUEL MANAGEMENT PANEL, M10055	*
SWITCH - R FWD FUEL BOOST PUMP, YCLS5	3	1	FLT COMPT, P5, FUEL MANAGEMENT PANEL, M10055	*
SWITCH - R OVRD PUMP, YCLS3	3	1	FLT COMPT, P5, FUEL MANAGEMENT PANEL, M10055	*
VALVE - AFT ENGINE FUEL CROSSFEED [4]	3	1	136KZ	28-22-02
VALVE - BOOST PUMP BYPASS	2	2	532BB,632BB	28-22-04
VALVE - DISCHARGE CHECK	2	4	532AB,632AB,531AB, 631AB	28-22-03 28-22-05
VALVE - ENGINE FUEL CROSSFEED [3]	3	1	531BB	28-22-02
VALVE - FUEL BOOST PUMP VAPOR VENT	2	4	532AB,632AB	28-22-09
VALVE - FWD ENGINE FUEL CROSSFEED [4]	3	1	136KZ	28-22-02
VALVE - L ENGINE FUEL SHUTOFF (SPAR)	3	1	532BB	28-22-01
VALVE - MOTIVE FLOW AND SCREEN	2	4	532AB,632AB,531AB, 631AB	28-22-03 28-22-05
VALVE - OVERRIDE/JETTISON PUMP VAPOR VENT [1]		4	531AB,631AB	28-22-09
VALVE - OVERRIDE PUMP VAPOR VENT [2]	2	2	531AB,631AB	28-22-09
VALVE - R ENGINE FUEL SHUTOFF (SPAR)	3	1	632BB	28-22-01

* SEE THE WDM EQUIPMENT LIST

Engine Fuel-Feed System - Component Index
Figure 101 (Sheet 2)

BOEING PROPRIETARY - Copyright (C) - Unpublished Work - See title page for details.

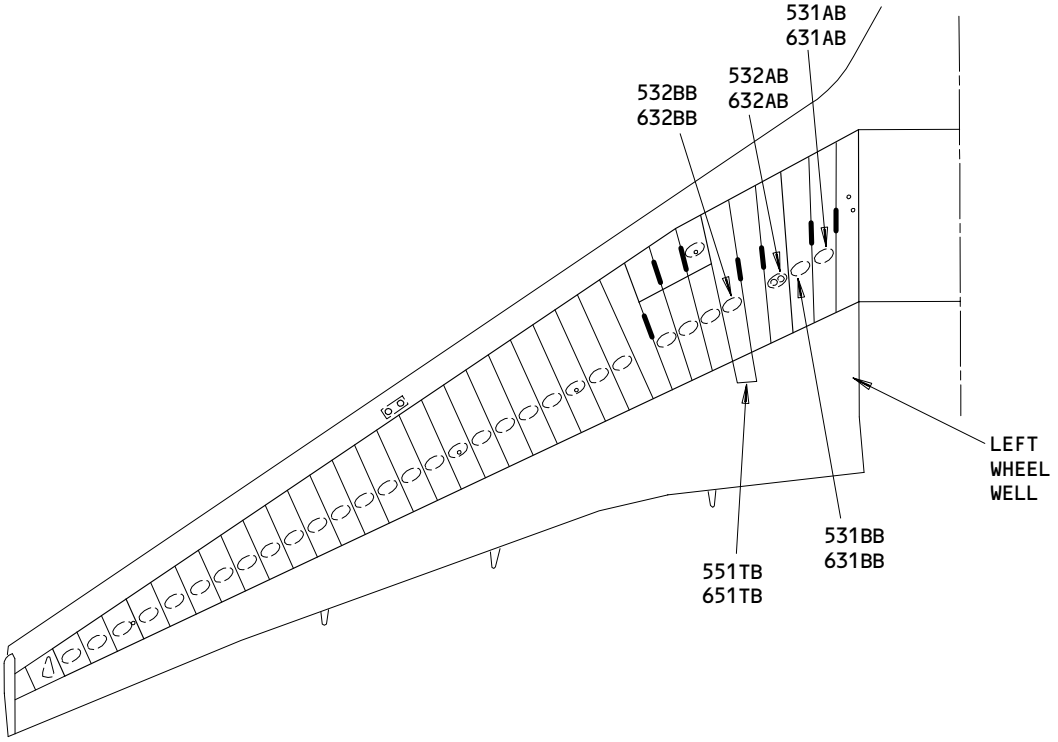

NOTE: 500 SERIES PANELS ON LEFT WING
600 SERIES PANELS ON RIGHT WING

Engine Fuel-Feed System - Component Location
Figure 102 (Sheet 1)

BOEING PROPRIETARY - Copyright (C) - Unpublished Work - See title page for details.

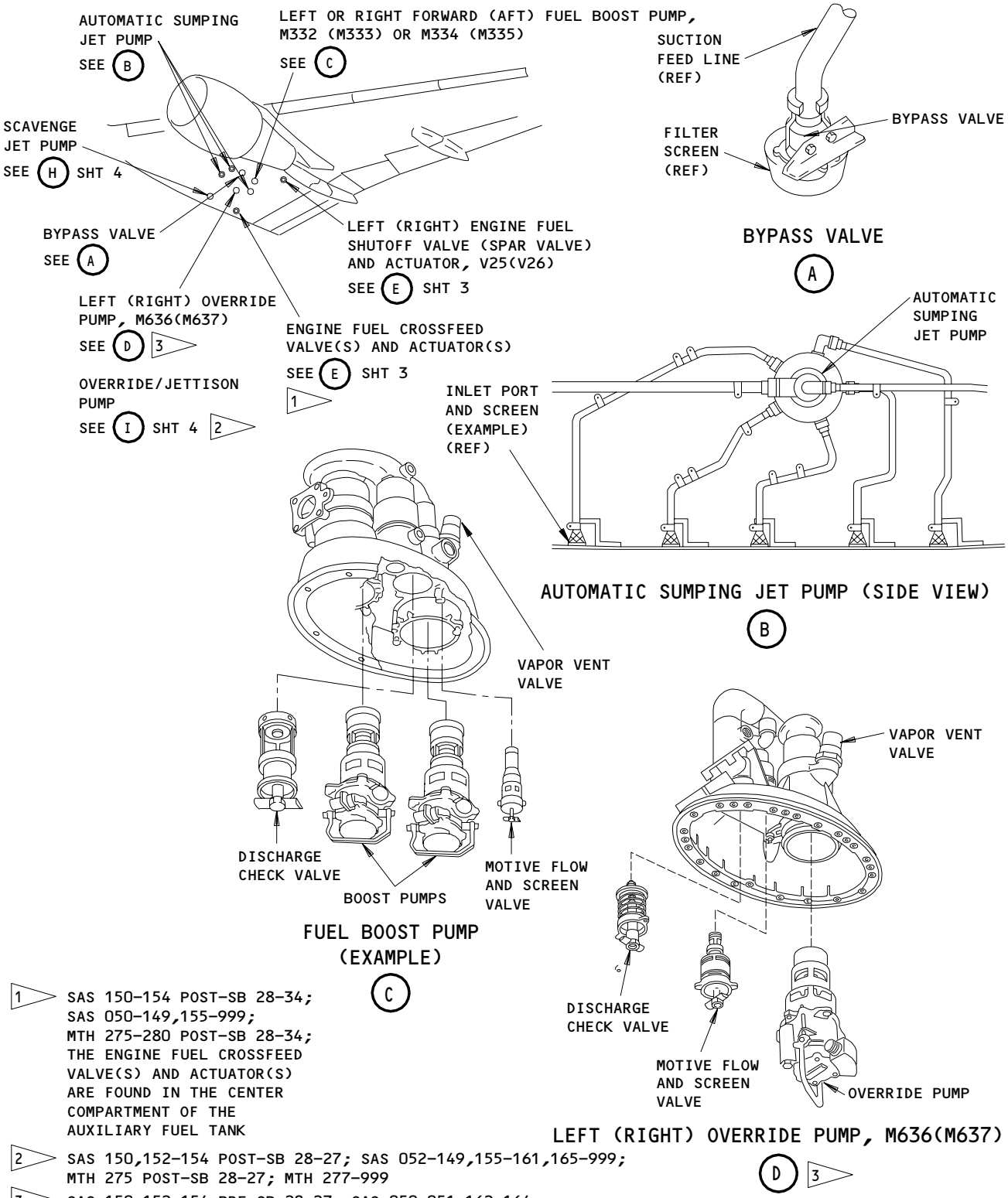

1 SAS 150-154 POST-SB 28-34; SAS 050-149,155-999; MTH 275-280 POST-SB 28-34; THE ENGINE FUEL CROSSFEED VALVE(S) AND ACTUATOR(S) ARE FOUND IN THE CENTER COMPARTMENT OF THE AUXILIARY FUEL TANK

2 SAS 150,152-154 POST-SB 28-27; SAS 052-149,155-161,165-999; MTH 275 POST-SB 28-27; MTH 277-999

3 SAS 150,152-154 PRE-SB 28-27; SAS 050,051,162-164; MTH 275 PRE-SB 28-27; MTH 276

Engine Fuel-Feed System - Component Location
Figure 102 (Sheet 2)

BOEING PROPRIETARY - Copyright (C) - Unpublished Work - See title page for details.

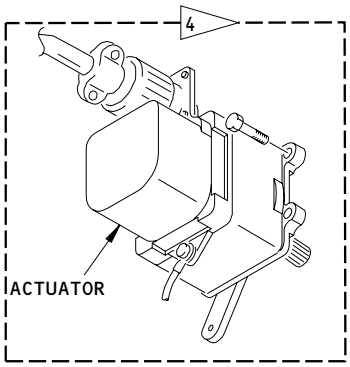

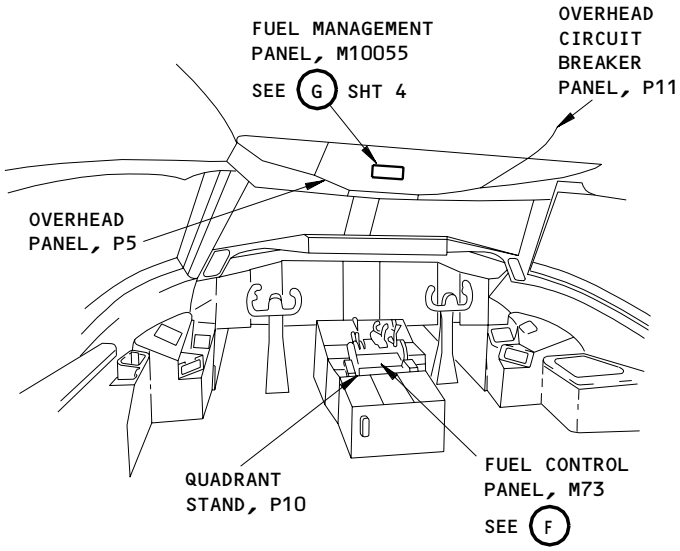

FLIGHT COMPARTMENT

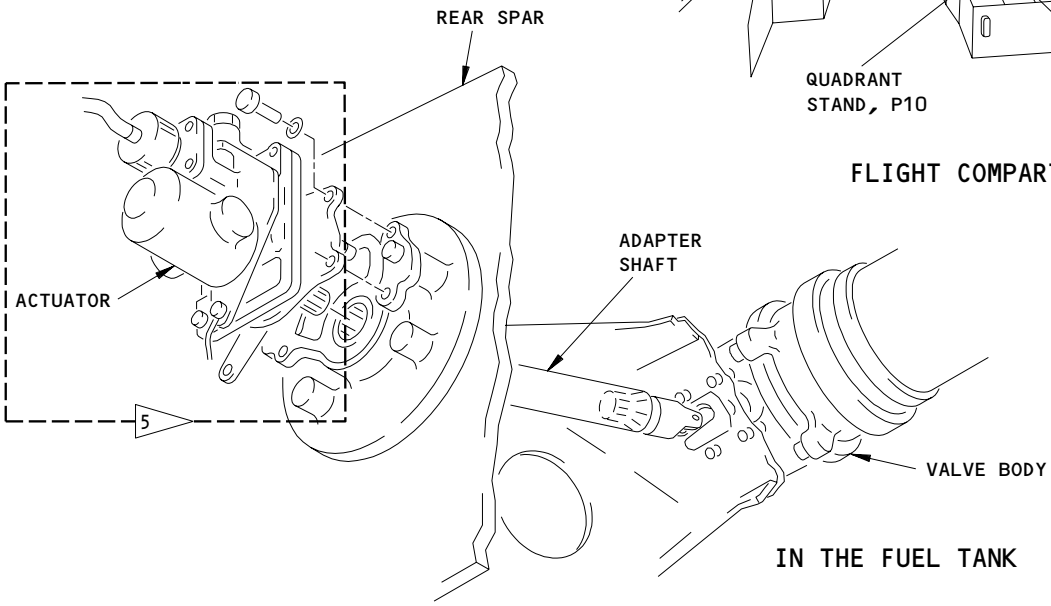

IN THE FUEL TANK

ENGINE FUEL SHUTOFF VALVE (SPAR VALVE)
AND ENGINE FUEL CROSSFEED VALVE(S)
(ALMOST THE SAME)

E FROM SHT 1

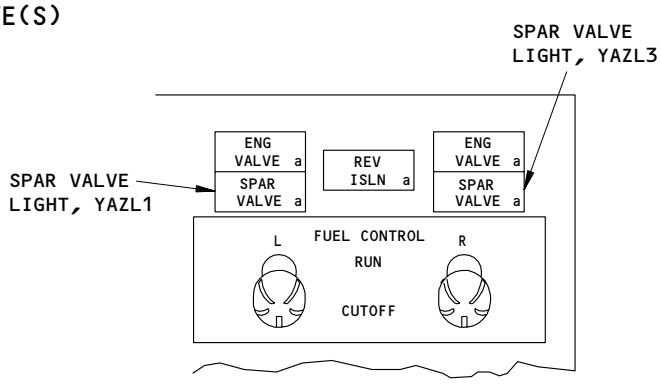

FUEL CONTROL PANEL, M73

F

4 RECOMMENDED

5 ALTERNATE

Engine Fuel-Feed System - Component Location
Figure 102 (Sheet 3)

BOEING PROPRIETARY - Copyright (C) - Unpublished Work - See title page for details.

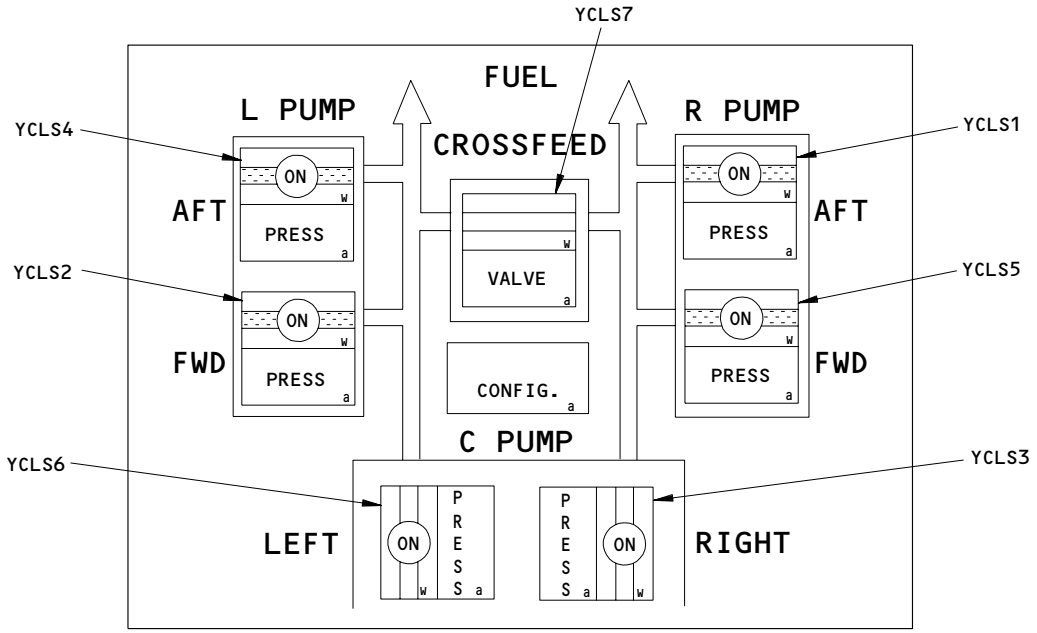

FUEL MANAGEMENT PANEL, M10055

G 6

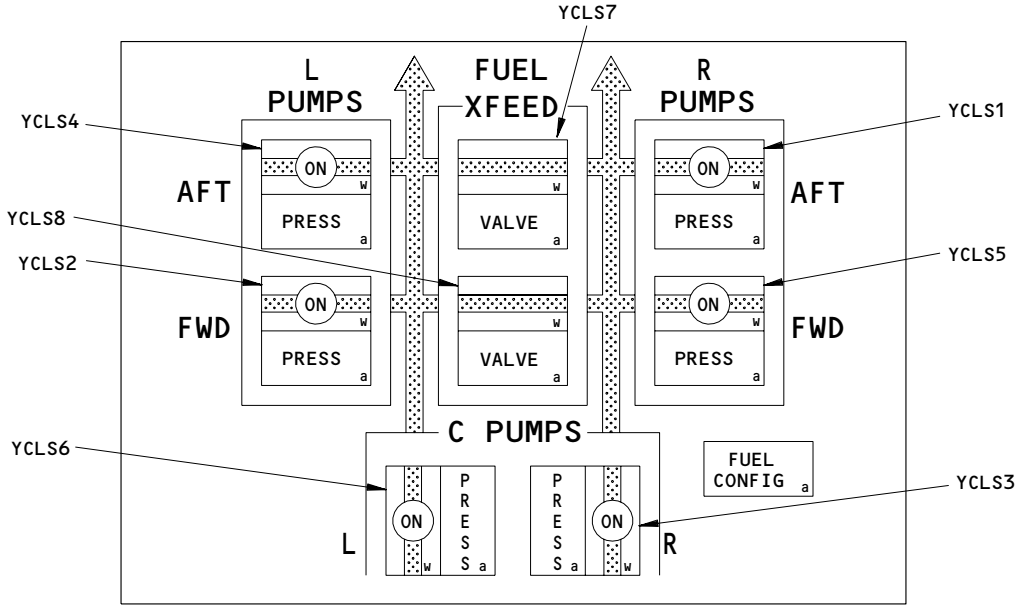

FUEL MANAGEMENT PANEL, M10055

G 7

6 AIRPLANES WITH A SINGLE ENGINE FUEL CROSSFEED VALVE (PRE-SB 28-34)

7 AIRPLANES WITH FORWARD AND AFT ENGINE FUEL CROSSFEED VALVES (POST-SB 28-34 OR PRR12221)

Engine Fuel-Feed System - Component Location (Detail from Sht 3)
Figure 102 (Sheet 4)

BOEING PROPRIETARY - Copyright (C) - Unpublished Work - See title page for details.

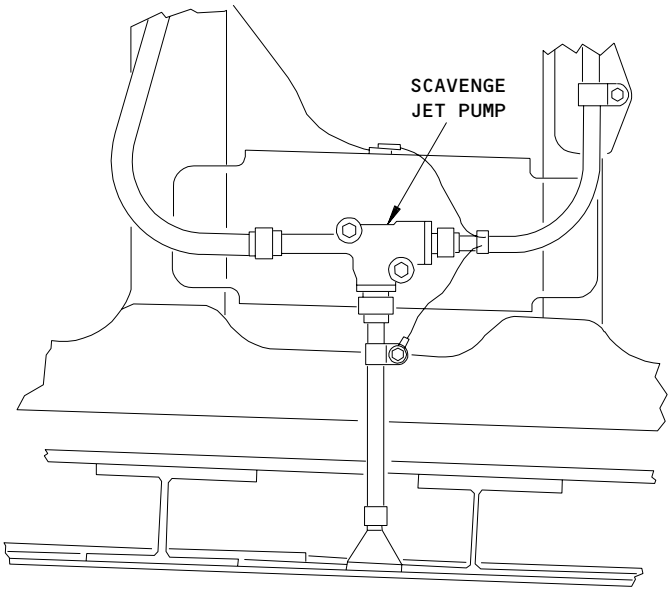

SCAVENGE JET PUMP
(SIDE VIEW)

H

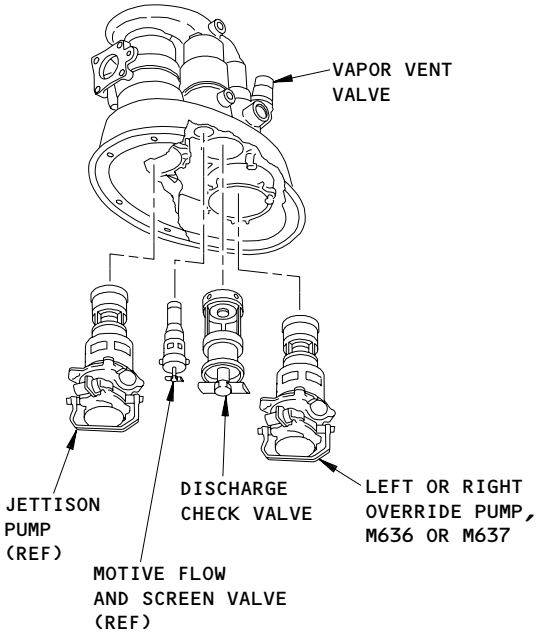

OVERRIDE/JETTISON PUMP

I 2

Engine Fuel-Feed System - Component Location
Figure 102 (Sheet 5)

BOEING PROPRIETARY - Copyright (C) - Unpublished Work - See title page for details.

ENGINE FUEL FEED SYSTEM - ADJUSTMENT/TEST

1. General
   A. This procedure contains operational tests for the engine fuel-feed system and a system test for the fuel scavenge system. Included in the operational tests are tests for the fuel boost pumps, the override pumps and pressure switches, the engine fuel shutoff valves, the engine fuel crossfeed valve and the float-operated shutoff valve.
   B. The override pumps cannot be operated with less than 1000 pounds (453 kilograms) per AD 97-19-15. This restriction applies to airplanes that have one or more override pumps that have inlet diffusers attached by screws (P/N S343T002-5, -8, -12, -15). SB 28-52 and SB 28-62 replace these pumps with pumps that either have no diffusers or have a cast-in inlet diffuser. When all the pumps are replaced with new or modified pumps (P/N S343T002-23 or higher dash number) there is no minimum fuel restriction. Do not use JP4 or JET-B fuel after the new or modified override pump is installed.

TASK 28-22-00-715-001

2. Operational Test - Engine Fuel-Feed System (Fig. 501)
   A. References
      (1) AMM 06-44-00/201, Wing Access Doors and Panels
      (2) AMM 12-11-01/301, Fuel Tank Pressure Fueling
      (3) AMM 24-22-00/201, Electrical Power - Control
      (4) AMM 28-26-00/201, Defueling
   B. Access
      (1) Location Zones
            211 Control Cabin - Section 41 (Left)
            212 Control Cabin - Section 41 (Right)
            521 Leading Edge to Front Spar (Left)

      (2) Access Panel
            521QB Fueling Station Door (Left)

   C. Prepare to Test

      S 865-002
      (1) Supply electrical power (AMM 24-22-00/201).

      S 215-003
      (2) Make sure the APU master control switch on the overhead panel, P5, is in the OFF position.

BOEING PROPRIETARY - Copyright (C) - Unpublished Work - See title page for details.

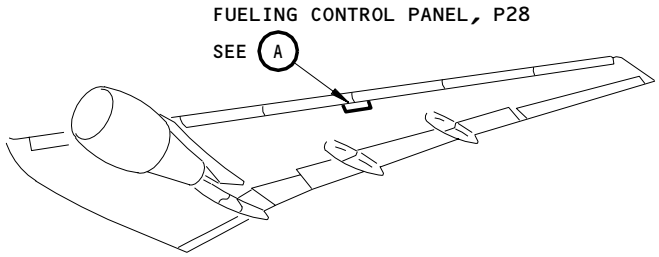

LEFT WING

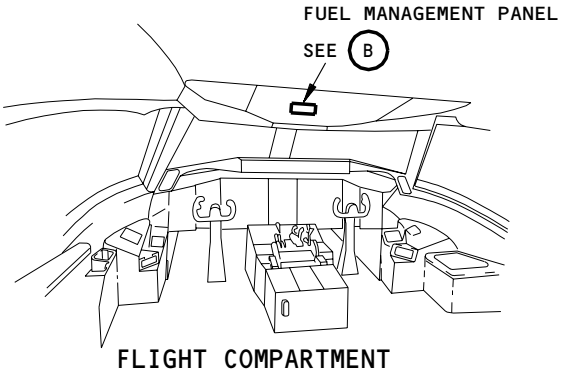

FLIGHT COMPARTMENT

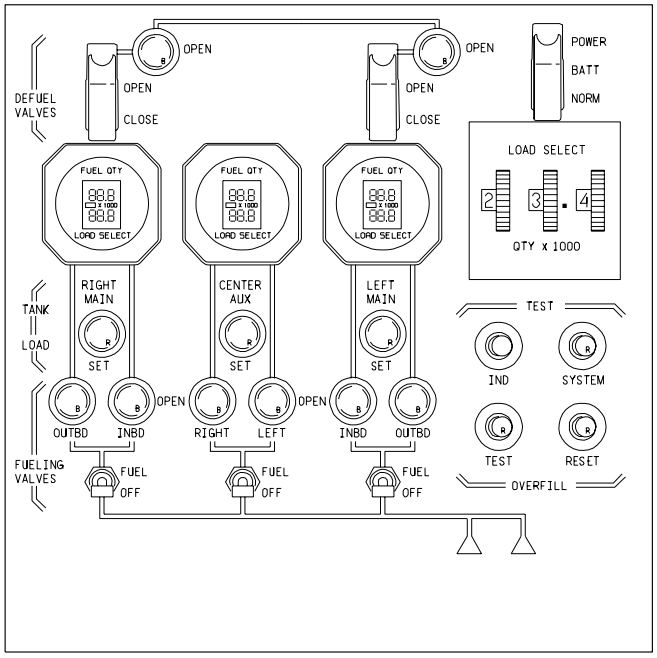

FUELING CONTROL PANEL, P28

A

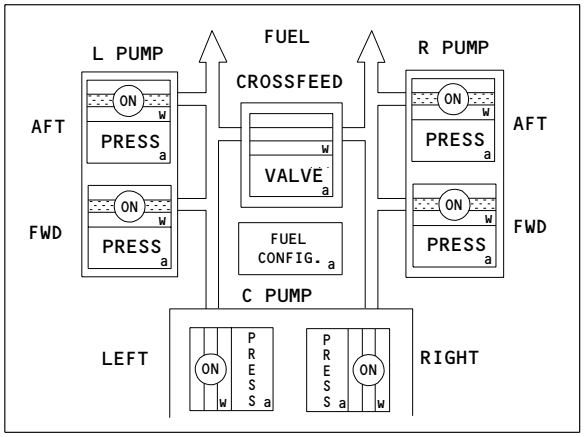

FUEL MANAGEMENT PANEL
(ON THE P5 PANEL)

B 1

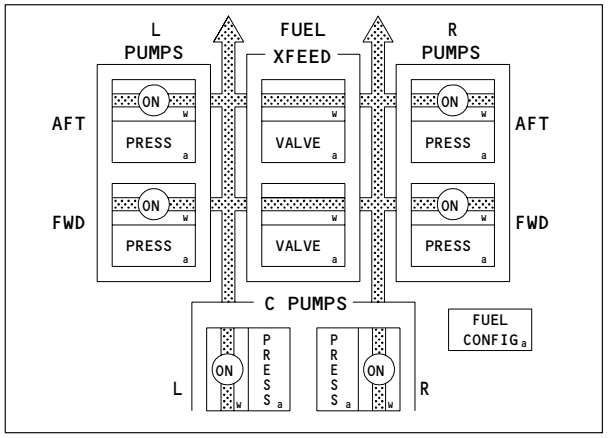

FUEL MANAGEMENT PANEL
(ON THE P5 PANEL)

B 2

1 AIRPLANES WITH A SINGLE FUEL CROSSFEED VALVE

2 AIRPLANES WITH FORWARD AND AFT FUEL CROSSFEED VALVES

Engine Fuel Feed System
Figure 501

BOEING PROPRIETARY - Copyright (C) - Unpublished Work - See title page for details.

S 215-119

(3) Make sure these switch-lights of the fuel management panel on the P5 panel are in the position shown.

SWITCH-LIGHT	POSITION
AFT L PUMP	OFF
AFT R PUMP	OFF
FWD L PUMP	OFF
FWD R PUMP	OFF
LEFT C PUMP	OFF
RIGHT C PUMP	OFF

S 655-212

(4) Refuel airplane if it is necessary (AMM 12-11-01/301).

NOTE: The minimum fuel quantities necessary to make sure all of the boost pumps and override pumps are correctly primed are:

Fuel Boost Pumps - 1700 lbs (800 kgs) in each main fuel tank.

Auxiliary Tank Override Pumps - 21,700 lbs (9900 kgs) in the auxiliary fuel tank.

You can refuel each fuel tank by pressure fueling (AMM 12-11-01/301) or by tank to tank transfer (AMM 28-26-00/201).

S 865-111

(5) Make sure these circuit breakers are closed:
- (a) On the main power distribution panel, P6:
  - 1) 6F15, L FUEL OVRD PUMP
  - 2) 6F21, R FUEL OVRD PUMP
  - 3) 6G15, L AFT FUEL BOOST PUMP
  - 4) 6G18, R FWD FUEL BOOST PUMP
  - 5) 6G21, R AFT FUEL BOOST PUMP
  - 6) 6G24, L FWD FUEL BOOST PUMP
- (b) On the overhead circuit breaker panel, P11:
  - 1) AIRPLANES WITH A SINGLE FUEL CROSSFEED VALVE; 11D36, FUEL CROSSFEED VALVE

BOEING PROPRIETARY - Copyright (C) - Unpublished Work - See title page for details.

2) AIRPLANES WITH FORWARD AND AFT FUEL CROSSFEED VALVES;
11M20, FWD FUEL CROSSFEED VALVE
11M21, AFT FUEL CROSSFEED VALVE
11D36, CROSSFEED IND
3) 11M15, L CTR FUEL PUMPS
4) 11M16, FUEL PUMPS R FWD/L AFT
5) 11M25, FUEL PUMPS L FWD/R AFT
6) 11M24, R CTR FUEL PUMPS

S 215-016
(6) Make sure the six EICAS circuit breakers on the overhead circuit breaker panel, P11, are closed.

D. Test of the Left Forward Fuel Boost Pump

S 215-018
(1) Make sure the FWD L PUMP PRESS light of the fuel management panel on the P5 panel is on.

S 215-020
(2) Make sure the EICAS message, L FUEL SYS PRESS, shows on the top display.

S 865-283

WARNING: DO NOT OPERATE A FUEL PUMP IF THE LOW PRESSURE LIGHT COMES ON AND STAYS ON. FUEL VAPORS IN THE TANK MAY IGNITE AND CAUSE A FIRE OR EXPLOSION.

(3) To operate any of the fuel pumps, you must be in the flight compartment to continuously monitor the fuel quantity and the low pressure indication in the fuel tank.
(a) Immediately push the applicable fuel pump switch to the off position if the low PRESS light comes on and stays on.

S 865-021
(4) Push the FWD L PUMP switch-light on the P5 panel to the ON position.

S 215-023
(5) Make sure the ON flowbar comes on.

S 215-024
(6) Make sure the FWD L PUMP PRESS light goes out in 15 seconds.

S 215-025
(7) Make sure the EICAS message, L FUEL SYS PRESS, does not show on the top display.

S 215-026
(8) Make sure the EICAS message, L AFT FUEL PUMP, shows on the top display.

BOEING PROPRIETARY - Copyright (C) - Unpublished Work - See title page for details.

S 285-113
(9) Listen near the left forward fuel boost pump to make sure it operates.

S 865-027
(10) Open this circuit breaker:
(a) On the main power distribution panel, P6:
1) 6G24, L FWD FUEL BOOST PUMP

S 215-028
(11) Make sure the FWD L PUMP PRESS light comes on after approximately 10 seconds.

S 865-029
(12) Close this circuit breaker:
(a) On the P6 panel:
1) 6G24, L FWD FUEL BOOST PUMP

S 865-030
(13) Push the FWD L PUMP switch-light on the P5 panel to the off position.

S 215-032
(14) Make sure the ON flowbar goes off.

S 215-033
(15) Make sure the FWD L PUMP PRESS light comes on.

S 215-034
(16) Make sure the EICAS message, L FUEL SYS PRESS, shows on the top display.

E. Test of the Right Forward Fuel Boost Pump

S 215-121
(1) Make sure the FWD R PUMP PRESS light of the fuel management panel on the P5 panel is on.

S 215-123
(2) Make sure the EICAS message, R FUEL SYS PRESS, shows on the top display.

BOEING PROPRIETARY - Copyright (C) - Unpublished Work - See title page for details.

S 865-284

WARNING: DO NOT OPERATE A FUEL PUMP IF THE LOW PRESSURE LIGHT COMES ON AND STAYS ON. FUEL VAPORS IN THE TANK MAY IGNITE AND CAUSE A FIRE OR EXPLOSION.

(3) To operate any of the fuel pumps, you must be in the flight compartment to continuously monitor the fuel quantity and the low pressure indication in the fuel tank.
   (a) Immediately push the applicable fuel pump switch to the off position if the low PRESS light comes on and stays on.

S 865-124
(4) Push the FWD R PUMP switch-light on the P5 panel to the ON position.

S 215-126
(5) Make sure the ON flowbar comes on.

S 215-127
(6) Make sure the FWD R PUMP PRESS light goes out in 15 seconds.

S 215-128
(7) Make sure the EICAS message, R FUEL SYS PRESS, does not show on the top display.

S 215-129
(8) Make sure the EICAS message, R AFT FUEL PUMP, shows on the top display.

S 285-114
(9) Listen near the right forward fuel boost pump to make sure it operates.

S 865-130
(10) Open this circuit breaker:
   (a) On the main power distribution panel, P6:
      1) 6G18, R FWD FUEL BOOST PUMP

S 215-221
(11) Make sure the FWD R PUMP PRESS light comes on after approximately 10 seconds.

S 865-132
(12) Close this circuit breaker:
   (a) On the P6 panel:
      1) 6G18, R FWD FUEL BOOST PUMP

S 865-201
(13) Push the FWD R PUMP switch-light on the P5 panel to the off position.

BOEING PROPRIETARY - Copyright (C) - Unpublished Work - See title page for details.

S 215-134
(14) Make sure the ON flowbar goes off.

S 215-135
(15) Make sure the FWD R PUMP PRESS light comes on.

S 215-136
(16) Make sure the EICAS message, R FUEL SYS PRESS, shows on the top display.

F. Test of the Left Aft Fuel Boost Pump

S 215-138
(1) Make sure the AFT L PUMP PRESS light of the fuel management panel on the P5 panel is on.

S 215-223
(2) Make sure the EICAS message, L FUEL SYS PRESS, shows on the top display.

S 865-285

WARNING: DO NOT OPERATE A FUEL PUMP IF THE LOW PRESSURE LIGHT COMES ON AND STAYS ON. FUEL VAPORS IN THE TANK MAY IGNITE AND CAUSE A FIRE OR EXPLOSION.

(3) To operate any of the fuel pumps, you must be in the flight compartment to continuously monitor the fuel quantity and the low pressure indication in the fuel tank.
(a) Immediately push the applicable fuel pump switch to the off position if the low PRESS light comes on and stays on.

S 865-141
(4) Push the AFT L PUMP switch-light on the P5 panel to the ON position.

S 215-143
(5) Make sure the ON flowbar comes on.

S 215-144
(6) Make sure the AFT L PUMP PRESS light goes out in 15 seconds.

S 215-145
(7) Make sure the EICAS message, L FUEL SYS PRESS, does not show on the top display.

S 215-146
(8) Make sure the EICAS message, L FWD FUEL PUMP, shows on the top display.

BOEING PROPRIETARY - Copyright (C) - Unpublished Work - See title page for details.

S 285-115
(9) Listen near the left aft fuel boost pump to make sure it operates.

S 865-147
(10) Open this circuit breaker:
(a) On the main power distribution panel, P6:
1) 6G15, L AFT FUEL BOOST PUMP

S 215-224
(11) Make sure the AFT L PUMP PRESS light comes on after approximately 10 seconds.

S 865-149
(12) Close this circuit breaker:
(a) On the P6 panel:
1) 6G15, L AFT FUEL BOOST PUMP

S 865-150
(13) Push the AFT L PUMP switch-light on the P5 panel to the off position.

S 215-152
(14) Make sure the ON flowbar goes off.

S 215-153
(15) Make sure the AFT L PUMP PRESS light comes on.

S 215-154
(16) Make sure the EICAS message, L FUEL SYS PRESS, shows on the top display.

G. Test of the Right Aft Fuel Boost Pump

S 215-156
(1) Make sure the AFT R PUMP PRESS light of the fuel management panel on the P5 panel is on.

S 215-158
(2) Make sure the EICAS message, R FUEL SYS PRESS, shows on the top display.

BOEING PROPRIETARY - Copyright (C) - Unpublished Work - See title page for details.

S 865-286

WARNING: DO NOT OPERATE A FUEL PUMP IF THE LOW PRESSURE LIGHT COMES ON AND STAYS ON. FUEL VAPORS IN THE TANK MAY IGNITE AND CAUSE A FIRE OR EXPLOSION.

(3) To operate any of the fuel pumps, you must be in the flight compartment to continuously monitor the fuel quantity and the low pressure indication in the fuel tank.
   (a) Immediately push the applicable fuel pump switch to the off position if the low PRESS light comes on and stays on.

S 865-159
(4) Push the AFT R PUMP switch-light on the P5 panel to the ON position.

S 215-226
(5) Make sure the ON flowbar comes on.

S 215-162
(6) Make sure the AFT R PUMP PRESS light goes out in 15 seconds.

S 215-227
(7) Make sure the EICAS message, R FUEL SYS PRESS, does not show on the top display.

S 215-164
(8) Make sure the EICAS message, R FWD FUEL PUMP, shows on the top display.

S 285-116
(9) Listen near the right aft fuel boost pump to make sure it operates.

S 865-165
(10) Open this circuit breaker:
   (a) On the main power distribution panel,P6:
      1) 6G21, R AFT FUEL BOOST PUMP

BOEING PROPRIETARY - Copyright (C) - Unpublished Work - See title page for details.

S 215-166
(11) Make sure the AFT R PUMP PRESS light comes on after approximately 10 seconds.

S 865-167
(12) Close this circuit breaker:
(a) On the P6 panel:
1) 6G21, R AFT FUEL BOOST PUMP

S 865-168
(13) Push the AFT R PUMP switch-light on the P5 panel to the off position.

S 215-170
(14) Make sure the ON flowbar goes off.

S 215-171
(15) Make sure the AFT R PUMP PRESS light comes on.

S 215-228
(16) Make sure the EICAS message, R FUEL SYS PRESS, shows on the top display.

H. Test of the Override Pumps and Pressure Switches in the Auxiliary Fuel Tank

S 015-118
(1) Open the fueling station door, 521QB (AMM 06-44-00/201).

S 785-262
(2) OVERRIDE PUMPS WITH A DIFFUSER INSTALLED (PN S343T002-5,-8,-12,-15); Do this step:

WARNING: DO NOT OPERATE THE LEFT OVERRIDE (C) PUMP IF THE FUEL QUANTITY IN THE AUXILIARY TANK IS BELOW 1000 POUNDS (453 KILOGRAMS). DRY FUEL PUMP OPERATION MAY CAUSE FUEL VAPORS IN THE TANK TO IGNITE DUE TO THE GENERATION OF SPARKS CAUSED BY METAL TO METAL CONTACT WITHIN THE FUEL PUMPS.

(a) Make sure there is a minimum fuel quantity of 1000 pounds (453 kilograms) in the auxiliary tank.

BOEING PROPRIETARY - Copyright (C) - Unpublished Work - See title page for details.

S 865-287

WARNING: DO NOT OPERATE A FUEL PUMP IF THE LOW PRESSURE LIGHT COMES ON AND STAYS ON. FUEL VAPORS IN THE TANK MAY IGNITE AND CAUSE A FIRE OR EXPLOSION.

(3) To operate any of the fuel pumps, you must be in the flight compartment to continuously monitor the fuel quantity and the low pressure indication in the fuel tank.
   (a) Immediately push the applicable fuel pump switch to the off position if the low PRESS light comes on and stays on.

S 865-060
(4) Push the LEFT C PUMP switch-light of the fuel management panel on the P5 panel to the ON position.

S 215-062
(5) Make sure the ON flowbar comes on.

S 215-215
(6) Make sure the LEFT C PUMP PRESS light comes on then goes off after approximately 10 seconds.

S 215-231
(7) Make sure the EICAS message, L FUEL SYS PRESS, does not show on the top display.

S 215-230
(8) Make sure the EICAS message, FUEL CONFIG, does not show on the top display.

S 215-229
(9) Make sure the CONFIG light of the fuel management panel is off.

S 285-120
(10) Listen near the left override pump to make sure it operates.

BOEING PROPRIETARY - Copyright (C) - Unpublished Work - See title page for details.

S 865-177
(11) Push the LEFT C PUMP switch-light to the off position.

S 215-178
(12) Make sure the flowbar goes off.

S 215-179
(13) Make sure the LEFT C PUMP PRESS light is off.

S 215-184
(14) Make sure the EICAS message, L FUEL SYS PRESS, shows on the top display.

S 785-263
(15) OVERRIDE PUMPS WITH A DIFFUSER INSTALLED (PN S343T002-5,-8,-12,-15); Do this step:

WARNING: DO NOT OPERATE THE RIGHT OVERRIDE (C) PUMP IF THE FUEL QUANTITY IN THE AUXILIARY TANK IS BELOW 1000 POUNDS (453 KILOGRAMS). DRY FUEL PUMP OPERATION MAY CAUSE FUEL VAPORS IN THE TANK TO IGNITE DUE TO THE GENERATION OF SPARKS CAUSED BY METAL TO METAL CONTACT WITHIN THE FUEL PUMPS.

(a) Make sure there is a minimum fuel quantity of 1000 pounds (453 kilograms) in the auxiliary tank.

S 865-288

WARNING: DO NOT OPERATE A FUEL PUMP IF THE LOW PRESSURE LIGHT COMES ON AND STAYS ON. FUEL VAPORS IN THE TANK MAY IGNITE AND CAUSE A FIRE OR EXPLOSION.

(16) To operate any of the fuel pumps, you must be in the flight compartment to continuously monitor the fuel quantity and the low pressure indication in the fuel tank.
(a) Immediately push the applicable fuel pump switch to the off position if the low PRESS light comes on and stays on.

S 865-187
(17) Push the RIGHT C PUMP switch-light of the fuel management panel to the ON position.

S 215-188
(18) Make sure the ON flowbar comes on.

S 215-189
(19) Make sure the RIGHT C PUMP PRESS light comes on then goes off after approximately 10 seconds.

BOEING PROPRIETARY - Copyright (C) - Unpublished Work - See title page for details.

S 215-190
(20) Make sure the EICAS message, R FUEL SYS PRESS, does not show on the top display.

S 215-191
(21) Make sure the EICAS message, FUEL CONFIG, does not show on the top display.

S 215-192
(22) Make sure the CONFIG light of the fuel management panel is off.

S 285-121
(23) Listen near the right override pump to make sure it operates.

S 865-193
(24) Push the RIGHT C PUMP switch-light to the off position.

S 215-194
(25) Make sure the flowbar goes off.

S 215-195
(26) Make sure the RIGHT C PUMP PRESS light is off.

S 215-196
(27) Make sure the EICAS message, R FUEL SYS PRESS, shows on the top display.

S 415-063
(28) Close the fueling station door, 521QB (AMM 06-44-00/201).

I. Test of the Engine Fuel Shutoff Valve

S 865-064
(1) Put the L FUEL CONTROL switch on the P10 stand to the RUN postition.

S 215-065
(2) Make sure the SPAR VALVE light comes on then goes off.

BOEING PROPRIETARY - Copyright (C) - Unpublished Work - See title page for details.

S 865-066
(3) Put the L FUEL CONTROL switch on the P10 stand in the CUTOFF position.

S 215-067
(4) Make sure the SPAR VALVE light comes on then goes off.

S 865-068
(5) Put the R FUEL CONTROL switch on the P10 stand in the RUN position.

S 215-069
(6) Make sure the SPAR VALVE light comes on and then goes off.

S 865-070
(7) Put the R FUEL CONTROL switch on the P10 stand in the CUTOFF position.

S 215-071
(8) Make sure the SPAR VALVE light comes on and then goes off.

J. Put the Airplane Back to Its Usual Condition

S 865-078
(1) Remove electrical power if it is not necessary (AMM 24-22-00/201).

TASK 28-22-00-725-575

3. Engine Fuel Suction Feed - Operational Test

A. General
(1) Do this task on the ground while the engines operate at an idle.

B. References
(1) AMM 12-11-01/301, Fuel Tank Pressure Fueling
(2) AMM 28-26-00/201, Defueling
(3) AMM 71-00-00/201, Power Plant - Maintenance Procedures
(4) FIM 28-22-00/101, Engine Fuel Feed System

BOEING PROPRIETARY - Copyright (C) - Unpublished Work - See title page for details.

C. Access
(1) Location Zones
211 Control Cabin - Section 41 (Left)
212 Control Cabin - Section 41 (Right)

D. Prepare for Test

S 655-576
(1) Make sure that these quantities of fuel are in the fuel tanks:

NOTE: You can refuel the airplane by pressure fueling (AMM 12-11-01/301) or by tank to tank transfer (AMM 28-26-00/201).

NOTE: The fuel quantity given below may be at or below the fuel quantity needed to cover the hydraulic heat exchanger during the test.

(a) Refuel or defuel the fuel tank so the left main fuel tank contains 4,100 - 4,400 lbs (1,860 - 2,000 kgs) of fuel.
(b) Refuel or defuel the fuel tank so the right main fuel tank contains 4,100 - 4,400 lbs (1,860 - 2,000 kgs) of fuel.
(c) Make sure the auxiliary fuel tank contains 0 lbs (0 kgs) of fuel.

S 215-688

CAUTION: DO NOT OPERATE THE HYDRAULIC PUMPS AFTER THE HYDRAULIC TEMPERATURE INDICATION ON EICAS IS MORE THAN 100 DEGREES C (212 DEGREES F) OR AFTER THE PUMP OVERHEAT LIGHT COMES ON. IF YOU CONTINUE TO OPERATE THE PUMPS, THE HYDRAULIC FLUID CAN BECOME TOO HOT.

(2) Obey the subsequent limits during the test:
(a) Stop the operation of the hydraulic pump if the temperature indication on EICAS is more then 100 degrees C (212 degrees F).

BOEING PROPRIETARY - Copyright (C) - Unpublished Work - See title page for details.

(b) Stop the operation of the hydraulic pump if the hydraulic pump overheat light comes on.
(c) Do not operate the hydraulic pump for more than 10 minutes.
(d) After the operation of the hydraulic pump, let the temperature of the hydraulic pump decrease for 20 minutes with the hydraulic pump off.

S 215-689
(3) Make sure there are tire chocks in front and aft of all main landing gear tires (AMM 10-11-01/201).

S 865-577
(4) Make sure the switch-light(s) for the FUEL XFEED VALVE(s) on the fuel management panel (found on the overhead P5 panel) is (are) in the closed position.

S 865-581
(5) Make sure the switch-light for the C PUMPS L on the fuel management panel (found on the overhead P5 panel) is in the off position.

S 865-582
(6) Make sure the switch-light for the C PUMPS R on the fuel management panel (found on the overhead P5 panel) is in the off position.

E. Test the Engine Fuel Suction Feed

S 865-583

WARNING: DO NOT OPERATE A FUEL PUMP IF THE LOW PRESSURE LIGHT COMES ON AND STAYS ON. FUEL VAPORS IN THE TANK MAY IGNITE AND CAUSE A FIRE OR EXPLOSION.

(1) To operate any of the fuel pumps, you must be in the flight compartment to continuously monitor the fuel quantity and the low pressure indication of the fuel pumps.
(a) Immediately push the applicable fuel pump switch to the off position if the PRESS light comes on and stays on.

S 865-584
(2) Push the L PUMPS FWD switch-light on the fuel management panel (found on the P5 panel) to the ON position.
(a) Make sure the L PUMPS PRESS - FWD switch-light on the P5 panel is off.
(b) Make sure the ON flow bar on the L PUMPS FWD switch-light comes on.

BOEING PROPRIETARY - Copyright (C) - Unpublished Work - See title page for details.

S 865-585
(3) Push the L PUMPS AFT switch-light on the fuel management panel (found on the P5 panel) to the ON position.
(a) Make sure the L PUMPS PRESS - AFT switch-light on the P5 panel is off.
(b) Make sure the ON flow bar on the L PUMPS AFT switch-light comes on.

S 865-586
(4) Push the R PUMPS FWD switch-light on the fuel management panel (found on the P5 panel) to the ON position.
(a) Make sure the R PUMPS PRESS - FWD switch-light on the P5 panel is off.
(b) Make sure the ON flow bar on the R PUMPS FWD switch-light comes on.

S 865-587
(5) Push the R PUMPS AFT switch-light on the fuel management panel (found on the P5 panel) to the ON position.
(a) Make sure the R PUMPS PRESS - AFT switch-light on the P5 panel is off.
(b) Make sure the ON flow bar on the R PUMPS AFT switch-light comes on.

S 725-588
(6) Start the engines (AMM 71-00-00/201).

NOTE: Operate the engines at a minimum idle for this test.

S 725-589
(7) Permit the engines to operate at idle power with boost pumps on for a minimum of two minutes (this time is referred to as "the warm-up period").

NOTE: With ambient conditions of extreme cold, it can be necessary to permit the engine to warm up for more time.

S 725-590
(8) While the engines operate at a minimum idle, set all of the fuel pumps to the off position.
(a) If the APU was used to initially power the airplane, do one of the following steps:
1) Put the APU Master Switch on the P5 overhead panel to OFF.

BOEING PROPRIETARY - Copyright (C) - Unpublished Work - See title page for details.

2) Open these circuit breakers:
   a) 6G24, L FWD FUEL BOOST PUMP (On the main power distribution panel, P6)
   b) 11M25 FUEL PUMPS L FWD/R AF (On the overhead circuit breaker panel, P11)

S 725-591

(9) Make sure the engines operate at idle for a minimum of five minutes.
   (a) If one or both of the engines stop in less than five minutes, do this procedure: Right (Left) Engine Fails the Suction Feed Test (FIM 28-22-00/101 Fig. 113).

S 865-697

(10) If necessary, close these circuit breakers:
   (a) 6G24, L FWD FUEL BOOST PUMP (On the main power distribution panel, P6)
   (b) 11M25 FUEL PUMPS L FWD/R AFT (On the overhead circuit breaker panel, P11)

S 865-592

(11) Stop the engines with the correct shutdown procedure (AMM 71-00-00/201).

TASK 28-22-00-715-128

4. Operational Test - Engine Fuel Crossfeed Valve

A. References
   (1) AMM 24-22-00/201, Electrical Power - Control

B. Access
   (1) Location Zones
      211 Control Cabin - Section 41 (Left)
      212 Control Cabin - Section 41 (Right)

C. Prepare to Test

S 865-129

(1) Supply electrical power (AMM 24-22-00/201).

S 215-130

(2) Make sure the APU master control switch on the overhead panel, P5, is in the OFF position.

BOEING PROPRIETARY - Copyright (C) - Unpublished Work - See title page for details.

S 215-234
(3) Make sure these switch-lights of the fuel management panel on the P5 panel are in the position shown.

SWITCH-LIGHT	POSITION
AFT L PUMP	OFF
AFT R PUMP	OFF
FWD L PUMP	OFF
FWD R PUMP	OFF
LEFT C PUMP	OFF
RIGHT C PUMP	OFF

D. AIRPLANES WITH A SINGLE FUEL CROSSFEED VALVE;
Test of the Engine Fuel Crossfeed Valve

S 865-072
(1) Push the FUEL CROSSFEED switch-light of the fuel management panel on the P5 panel to the open position.

S 215-074
(2) Make sure the VALVE light comes on and then goes off.

S 865-075
(3) Push the FUEL CROSSFEED switch-light on the P5 panel to the closed position.

S 215-077
(4) Make sure the VALVE light comes on and then goes off.

E. AIRPLANES WITH FORWARD AND AFT FUEL CROSSFEED VALVES;
Test of the Engine Fuel Crossfeed Valves

S 865-239
(1) Push the AFT FUEL XFEED switch-light of the fuel management panel on the P5 panel to the open position.

S 215-240
(2) Make sure the VALVE light comes on and then goes off.

S 865-162
(3) Push the AFT FUEL XFEED switch-light on the P5 panel to the closed position.

BOEING PROPRIETARY - Copyright (C) - Unpublished Work - See title page for details.

S 215-241
(4) Make sure the VALVE light comes on and then goes off.

S 865-164
(5) Push the FWD FUEL XFEED switch-light on the P5 panel to the open position.

S 215-165
(6) Make sure the VALVE light comes on and then goes off.

S 865-166
(7) Push the FWD FUEL XFEED switch-light on the P5 panel to the closed position.

S 215-167
(8) Make sure the VALVE light comes on and then goes off.

TASK 28-22-00-725-489

5. Functional Test - Engine Fuel Crossfeed Valve

A. References
(1) AMM 06-44-00/201, Access Panels
(2) AMM 12-11-01/301, Fuel Tank Pressure Fueling
(3) AMM 24-22-00/201, Electrical Power - Control
(4) AMM 28-26-00/201, Defueling

B. Access
(1) Location Zones
211 Control Cabin - Section 41 (Left)
212 Control Cabin - Section 41 (Right)
521 Leading Edge to Front Spar (Left)
(2) Access Panel
521QB Fueling Station Door (Left)

C. Prepare to Test

S 865-490
(1) Supply electrical power (AMM 24-22-00/201).

S 865-491
(2) Make sure the APU master control switch on the overhead panel, P5, is in the OFF position.

BOEING PROPRIETARY - Copyright (C) - Unpublished Work - See title page for details.

S 865-492

(3) Make sure these switch-lights of the fuel management panel on the P5 panel are in the position shown.

SWITCH-LIGHT	POSITION
AFT L PUMP	OFF
AFT R PUMP	OFF
FWD L PUMP	OFF
FWD R PUMP	OFF
LEFT C PUMP	OFF
RIGHT C PUMP	OFF

S 865-493

(4) Make sure the left main tank has a minimum of 5000 pounds (2300 kilograms).
   (a) If it is necessary, refuel the left main fuel tank by pressure fueling (AMM 12-11-01/301) or by tank to tank transfer (AMM 28-26-00/201).

S 865-494

(5) Make sure these circuit breakers are closed:
   (a) On the main power distribution panel, P6:
      1) 6G24, L FWD BOOST PUMP
   (b) On the overhead circuit breaker panel, P11:
      1) AIRPLANES WITH A SINGLE FUEL CROSSFEED VALVE;
         11D36, FUEL CROSSFEED VALVE
      2) AIRPLANES WITH FORWARD AND AFT FUEL CROSSFEED VALVES;
         11M20, FWD FUEL CROSSFEED VALVE
         11M21, AFT FUEL CROSSFEED VALVE
         11D36, CROSSFEED IND
      3) 11M25, FUEL PUMPS L FWD/R AFT

S 865-495

(6) Make sure the six EICAS circuit breakers on the overhead circuit breaker panel, P11, are closed.

BOEING PROPRIETARY - Copyright (C) - Unpublished Work - See title page for details.

D. AIRPLANES WITH A SINGLE CROSSFEED VALVE;
Crossfeed Valve Test

S 865-496
(1) Open the fueling station door, 521QB (AMM 06-44-00/201).
(a) Make sure the fueling panel light comes on.

NOTE: This shows there is 28 volts dc at the panel.

S 725-509
(2) On the Fueling Control Panel, P28, put the RIGHT MAIN FUELING VALVES switch to the FUEL position.

S 725-510
(3) On the Fueling Control Panel, P28, put the RIGHT MAIN DEFUEL VALVE switch to the OPEN position.
(a) Make sure the RIGHT MAIN DEFUEL VALVE OPEN light comes on.

S 725-499
(4) On the P5 overhead panel, push the FUEL CROSSFEED switch-light to the open position.
(a) Make sure the VALVE light comes on and then goes off.

S 725-500
(5) On the P5 overhead panel, push the L FWD PUMP switch-light to the ON position.

S 725-501
(6) Make sure 1000 pounds (500 kilograms) of fuel is transferred from the left main tank to the right main tank.

NOTE: The fuel will transfer in approximately 2 minutes.

S 725-502
(7) On the P5 overhead panel, push the L FWD PUMP switch-light to the off position.

S 725-503
(8) On the P5 overhead panel, push the FUEL CROSSFEED switch-light to the closed position.
(a) Make sure the VALVE light comes on and then goes off.

BOEING PROPRIETARY - Copyright (C) - Unpublished Work - See title page for details.

S 725-504
(9) On the P5 overhead panel, push the L FWD PUMP switch-light to the ON position.
(a) Make sure no fuel is transferred, as shown on the fuel quantity indicators on the P5 overhead panel.

NOTE: Three minutes is sufficient time to make sure there is no fuel transfer.

S 725-505
(10) On the P5 overhead panel, push the FWD L PUMP switch-light to the off position.
(a) Make sure the FWD L PUMP PRESS light comes on.

S 725-506
(11) On the fueling control panel, P28, put the RIGHT MAIN FUELING VALVE switch to the OFF position.

S 725-507
(12) On the fueling control panel, P28, put the RIGHT MAIN DEFUEL VALVE switch to the CLOSE position.
(a) Make sure the RIGHT MAIN DEFUEL VALVE OPEN light goes off.

S 865-508
(13) Close the fueling station door, 521QB (AMM 06-44-00/201).

E. AIRPLANES WITH FORWARD AND AFT DUAL CROSSFEED VALVE;
Crossfeed Valve Test

S 865-528
(1) Open the fueling station door, 521QB (AMM 06-44-00/201).
(a) Make sure the fueling panel light comes on.

NOTE: This shows there is 28 volts dc at the panel.

S 865-511
(2) On the fueling control panel, P28, put the RIGHT MAIN FUELING VALVES switch to the FUEL position.

S 725-512
(3) On the fueling control panel, P28, put the RIGHT MAIN DEFUEL VALVE switch to the OPEN position.
(a) Make sure the RIGHT MAIN DEFUEL VALVE OPEN light comes on.

S 725-513
(4) On the P5 overhead panel, push the AFT FUEL XFEED switch-light to the open position.
(a) Make sure the VALVE light comes on and then goes off.

BOEING PROPRIETARY - Copyright (C) - Unpublished Work - See title page for details.

S 725-514
(5) On the P5 overhead panel, push the L FWD PUMP switch-light to the ON position.

S 725-515
(6) Make sure 1000 pounds (500 kilograms) of fuel is transferred from the left main tank to the right main tank.

NOTE: The fuel will transfer in approximately 2 minutes.

S 725-516
(7) On the P5 overhead panel, push the L FWD PUMP switch-light to the off position.

S 725-517
(8) On the P5 overhead panel, push the AFT FUEL XFEED switch-light to the closed position.
(a) Make sure the VALVE light comes on and then goes off.

S 725-518
(9) On the P5 overhead panel, push the FWD FUEL XFEED switch-light to the open position.
(a) Make sure the VALVE light comes on and then goes off.

S 725-519
(10) On the P5 overhead panel, push the L FWD PUMP switch-light to the ON position.

S 725-520
(11) Make sure 1000 pounds (500 kilograms) of fuel is transferred from the left main tank to the right main tank.

NOTE: The fuel will transfer in approximately 2 minutes.

S 725-521
(12) On the P5 overhead panel, push the L FWD PUMP switch-light to the off position.

S 725-522
(13) On the P5 overhead panel, push the FWD FUEL XFEED switch-light to the closed position.
(a) Make sure the VALVE light comes on and then goes off.

BOEING PROPRIETARY - Copyright (C) - Unpublished Work - See title page for details.

S 725-523
(14) On the P5 overhead panel, push the L FWD PUMP switch-light to the ON position.
(a) Make sure no fuel is transferred, as shown on the fuel quantity indicators on the P5 overhead panel.

NOTE: Three minutes is sufficient time to make sure there is no fuel transfer.

S 725-524
(15) On the P5 overhead panel, push the FWD L PUMP switch-light to the off position.
(a) Make sure the FWD L PUMP PRESS light comes on.

S 725-525
(16) On the fueling control panel, P28, put the RIGHT MAIN FUELING VALVE switch to the OFF position.

S 725-526
(17) On the fueling control panel, P28, put the RIGHT MAIN DEFUEL VALVE switch to the CLOSE position.
(a) Make sure the RIGHT MAIN DEFUEL VALVE OPEN light goes off.

S 865-527
(18) Close the fueling station door, 521QB (AMM 06-44-00/201).

TASK 28-22-00-735-079
6. System Test - Fuel Scavenge System (Fig. 501)
A. References
(1) AMM 12-11-01/301, Fuel Tank Pressure Fueling
(2) AMM 24-22-00/201, Electrical Power - Control
(3) AMM 28-26-00/201, Defueling
B. Access
(1) Location Zones
211 Control Cabin - Section 41 (Left)
212 Control Cabin - Section 41 (Right)

C. Test of the Fuel Scavenge System

S 865-086
(1) Supply electrical power (AMM 24-22-00/201).

BOEING PROPRIETARY - Copyright (C) - Unpublished Work - See title page for details.

S 655-217

(2) For this test, the auxiliary fuel tank must contain at least 2200 lbs (1000 kgs) fuel, and each main fuel tank must contain less than 16,500 lbs (7500 kgs) fuel.

NOTE: You can refuel the fuel tanks by pressure fueling (AMM 12-11-01/301) or by tank-to-tank transfer (AMM 28-26-00/201).

S 975-089

(3) Make a written record of the fuel quantity in the auxiliary tank and in each main fuel tank, as shown on the fuel quantity indicators on the overhead panel, P5.

S 215-090

(4) Make sure the L and R FUEL CONTROL switches of the fuel control panel on the P10 panel are at the CUTOFF position.

S 215-092

(5) Make sure the LEFT C PUMP, RIGHT C PUMP, FWD R PUMP, and FWD L PUMP switch-lights on the fuel management panel on the overhead panel, P5, are in the off position.

S 215-093

(6) Make sure the LEFT C PUMP and the RIGHT C PUMP lights of the fuel management panel on the overhead panel, P5, are off.

S 215-242

(7) Make sure the FWD R PUMP and the FWD L PUMP PRESS lights of the fuel management panel on the overhead panel, P5, are on.

S 865-290

WARNING: DO NOT OPERATE A FUEL PUMP IF THE LOW PRESSURE LIGHT COMES ON AND STAYS ON. FUEL VAPORS IN THE TANK MAY IGNITE AND CAUSE A FIRE OR EXPLOSION.

(8) To operate any of the fuel pumps, you must be in the flight compartment to continuously monitor the fuel quantity and the low pressure indication in the fuel tank.
   (a) Immediately push the applicable fuel pump switch to the off position if the low PRESS light comes on and stays on.

S 865-094

(9) Push the AFT R PUMP and AFT L PUMP switch-lights on the fuel management panel to the ON position.

BOEING PROPRIETARY - Copyright (C) - Unpublished Work - See title page for details.

S 215-095
(10) Make sure the ON flowbar on the AFT R PUMP and AFT L PUMP switch-lights come on.

S 215-096
(11) Make sure the AFT R PUMP and AFT L PUMP PRESS lights go off.

S 735-097
(12) Let the aft boost pumps operate for 30 minutes.

NOTE: If the fuel temperature is below 0 deg Centigrade you may need to run the pumps for up to 60 minutes to transfer enough fuel to measure on the fuel quantity guages.

NOTE: Motive flow from the aft boost pumps operates the auxiliary tank scavenge jet pumps.

S 655-218
(13) Make sure the fuel quantity in the auxiliary tank decreases by 400 lbs (200 kgs) minimum, as shown on the fuel quantity indicator on the overhead panel, P5.

S 655-219
(14) Make sure the fuel quantity in each main fuel tank increases by 200 lbs (100 kgs) minimum, as shown on the fuel quantity indicators on the P5 panel.

S 865-103
(15) Push the AFT R PUMP and AFT L PUMP switch-lights of the fuel management panel on the P5 panel to the off position.

S 865-104
(16) Remove electrical power if it is not necessary (AMM 24-22-00/201).

TASK 28-22-00-715-132
7. Operational Test - Float-Operated Shutoff Valve
A. References
(1) AMM 12-11-01/301, Fuel Tank Pressure Fueling
(2) AMM 24-22-00/201, Electrical Power - Control

BOEING PROPRIETARY - Copyright (C) - Unpublished Work - See title page for details.

(3) AMM 28-26-00/201, Defueling

B. Access

(1) Location Zones

211 Control Cabin - Section 41 (Left)
212 Control Cabin - Section 41 (Right)

C. Test of the Float-Operated Shutoff Valve

S 865-105

(1) Supply electrical power (AMM 24-22-00/201).

S 655-220

(2) For this test, the auxiliary fuel tank must contain at least 2200 lbs (1000 kgs) fuel, and each main fuel tank must contain at least 18,000 lbs (8,181 kgs) fuel.

NOTE: You can refuel the fuel tanks by pressure fueling (AMM 12-11-01/301) or by tank-to-tank transfer (AMM 28-26-00/201).

S 215-108

(3) Make sure the L and R FUEL CONTROL switches of the fuel control panel on the P10 stand are at the CUTOFF position.

S 975-109

(4) Make a written record of the fuel quantity in the auxiliary fuel tank and in each main fuel tank, as shown on the fuel quantity indicators on the overhead panel, P5.

S 865-291

WARNING: DO NOT OPERATE A FUEL PUMP IF THE LOW PRESSURE LIGHT COMES ON AND STAYS ON. FUEL VAPORS IN THE TANK MAY IGNITE AND CAUSE A FIRE OR EXPLOSION.

(5) To operate any of the fuel pumps, you must be in the flight compartment to continuously monitor the fuel quantity and the low pressure indication in the fuel tank.

(a) Immediately push the applicable fuel pump switch to the off position if the low PRESS light comes on and stays on.

BOEING PROPRIETARY - Copyright (C) - Unpublished Work - See title page for details.

S 865-110

(6) Push the AFT R PUMP and AFT L PUMP switch-lights of the fuel management panel on the P5 panel to the ON position.

S 735-111

(7) Let the left and right aft boost pumps operate for 30 minutes.

NOTE: Motive flow from the aft boost pumps operates the scavenge jet pumps in the auxiliary fuel tank. If the main fuel tank is less that half full, the float-operated shutoff valve opens and lets fuel move from the auxiliary fuel tank to the main fuel tanks.

S 215-147

(8) Make sure the fuel quantity in the auxiliary fuel tank does not decrease.

NOTE: The fuel quantity indicators on the overhead panel may change 200 lbs (100 kgs), due to system accuracy and/or ambient conditions.

S 215-232

(9) Make sure the fuel quantity in each main fuel tank does not increase.

NOTE: The fuel quantity indicators on the overhead panel may change 200 lbs (100 kgs), due to system accuracy and/or ambient conditions.

S 865-117

(10) Push the AFT R PUMP and AFT L PUMP switch-lights of the fuel management panel on the P5 panel to the off position.

BOEING PROPRIETARY - Copyright (C) - Unpublished Work - See title page for details.

S 865-118
(11) Remove electrical power it if is not necessary (AMM 24-22-00/201).

TASK 28-22-00-725-529
8. AIRPLANES WITH OVERRIDE PUMP AUTOMATIC SHUTOFF;
Override Pump Auto Shutoff Functional Test
A. General
(1) ALI - Refer to the task: Airworthiness Limitation Precautions (AMM 28-00-00/201), for important information on airworthiness limitation instructions (ALIs).

NOTE: This is applicable to Airworthiness Limitation 28-AWL-20.

B. References
(1) AMM 06-44-00/201, Wing Access Doors and Panels
(2) AMM 12-11-01/301, Fuel Tank Pressure Fueling
(3) AMM 24-22-00/201, Electrical Power - Control
(4) AMM 28-26-00/201, Defueling
(5) AMM 32-00-15/201, Landing Gear Door Locks
(6) AMM 32-00-20/201, Landing Gear Downlocks
C. Equipment
(1) Stopwatch - commercially available
D. Access
(1) Location Zones

119	Main Equipment Center (Left and Right)
211	Control Cabin - Section 41 (Left)
212	Control Cabin - Section 41 (Right)
521	Leading Edge to Front Spar (Left)
531	Center Auxiliary Tank (Left)
631	Center Auxiliary Tank (Right)

(2) Access Panel

119AL	Electronics Access Door
521QB	Fueling Station Door (Left)
531AB	Access Cover (Left)
631AB	Access Cover (Right)

E. Prepare to Do the Functional Test

S 215-549
(1) Make sure the down locks are installed on the nose and main landing gear (AMM 32-00-20/201).

BOEING PROPRIETARY - Copyright (C) - Unpublished Work - See title page for details.

S 495-550

WARNING: USE THE PROCEDURE IN AMM 32-00-15/201 TO INSTALL THE DOOR LOCKS. THE DOORS OPEN AND CLOSE QUICKLY AND CAN CAUSE INJURY TO PERSONS OR DAMAGE TO EQUIPMENT.

(2) Open the doors for the landing gear and install the door locks (AMM 32-00-15/201).

S 865-297

(3) Supply electrical power (AMM 24-22-00/201).

S 655-533

(4) Refuel or transfer fuel into the auxiliary fuel tank to make sure there is this minimum quantity of fuel in the auxiliary fuel tank (AMM 12-11-01/301, AMM 28-26-00/201):
   (a) 21,700 pounds (9900 kilograms)

S 865-574

(5) Make sure these circuit breakers are closed:
   (a) On the main power distribution panel, P6:
      1) 6F15, L FUEL OVRD PUMP
      2) 6F21, R FUEL OVRD PUMP
   (b) On the overhead circuit breaker panel, P11:
      1) 11D23, ENG SPEED SENS L1
      2) 11D24, ENG SPEED SENS R1
      3) 11M15, L CTR FUEL PUMPS
      4) 11M24, R CTR FUEL PUMPS
      5) 11M13, L FUEL JTSN CONT (if installed)
      6) 11M22, R FUEL JTSN CONT (if installed)
   (c) On the APU external power panel, P34:
      1) 34L3, FUELING POWER
      2) 34L5, FUELING VALVE
   (d) AIRPLANES WITH FUEL JETTISON SYSTEM;
      On the left miscellaneous electrical equipment panel, P36:
      1) 36F4 or 36G7, L FUEL JETT PUMP
   (e) AIRPLANES WITH FUEL JETTISON SYSTEM;
      On the right miscellaneous electrical equipment panel, P37:
      1) 37F4 or 37G4, R FUEL JETT PUMP

S 215-298

(6) Make sure the APU master control switch on the overhead panel, P5, is in the OFF position.

BOEING PROPRIETARY - Copyright (C) - Unpublished Work - See title page for details.

S 215-300
(7) Make sure these switch-lights of the fuel management panel on the P5 panel are in the position shown.

SWITCH-LIGHT	POSITION
AFT L PUMP	OFF
AFT R PUMP	OFF
FWD L PUMP	OFF
FWD R PUMP	OFF
LEFT C PUMP	OFF
RIGHT C PUMP	OFF

F. Functional Test - Left Override Pump Auto Shutoff Circuit

S 865-693
(1) Open the fueling station door, 521QB (AMM 06-44-00/201).

S 865-633

WARNING: DO NOT OPERATE A FUEL PUMP IF THE LOW PRESSURE LIGHT COMES ON AND STAYS ON. FUEL VAPORS IN THE TANK MAY IGNITE AND CAUSE A FIRE OR EXPLOSION.

(2) To operate any of the fuel pumps, you must be in the flight compartment to continuously monitor the fuel quantity and the low pressure indication in the fuel tank.
(a) Immediately push the applicable fuel pump switch to the off position if the low PRESS light comes on and stays on.

S 725-534
(3) Push the LEFT C PUMP switch-light of the fuel management panel on the P5 panel to the ON position.

NOTE: The PRESS light will come on and then go off which shows the left override pump has pressure.

S 725-535
(4) Listen for a minimum of 20 seconds at the left override pump to make sure it operates.

NOTE: The left override pump is behind access cover 531AB on the left wing (AMM 06-44-00/201).

BOEING PROPRIETARY - Copyright (C) - Unpublished Work - See title page for details.

S 725-536
(5) Push the LEFT C PUMP switch-light to the off position.

S 865-637
(6) Close the fueling station door, 521QB (AMM 06-44-00/201).

S 865-635
(7) Move the CH-1 toggle switch of the L N2 Engine Speed Card, M1093, on the P50 panel to the TEST position.

S 015-647
(8) Get access to the left override pump pressure switch on the rear spar.

S 025-651
(9) Disconnect the electrical connector from the pressure switch.

S 425-645
(10) Install a jumper on the left override pump pressure switch connector, D2806, between pins 2 and 3 (WDM 28-42-12).

S 725-544
(11) Push the LEFT C PUMP switch-light on the P5 panel to the ON position.

S 215-631
(12) Make sure the LEFT C PUMP PRESS light comes on and stays on.

NOTE: This shows the left override pump has low pressure.

S 725-638
(13) Listen for 15 seconds at the left override pump to make sure it operates then stops.

S 725-547
(14) Push the LEFT C PUMP switch-light to the off position.

BOEING PROPRIETARY - Copyright (C) - Unpublished Work - See title page for details.

S 025-646
(15) Remove the jumper from the left override pump pressure switch connector, D2806 (WDM 28-42-12).

S 425-650
(16) Connect the electrical connector to the pressure switch.

S 865-639
(17) Move the CH-1 toggle switch of the L N2 Engine Speed Card, M1093, on the P50 panel to the NORMAL position.

S 725-694
(18) For the left override pump, do this procedure: Test of the Override Pumps and Pressure Switches in the Auxiliary Fuel Tank (AMM 28-22-00/501).

G. Functional Test - Right Override Pump Auto Shutoff Circuit

S 865-691
(1) Open the fueling station door, 521QB (AMM 06-44-00/201).

S 865-634

WARNING: DO NOT OPERATE A FUEL PUMP IF THE LOW PRESSURE LIGHT COMES ON AND STAYS ON. FUEL VAPORS IN THE TANK MAY IGNITE AND CAUSE A FIRE OR EXPLOSION.

(2) To operate any of the fuel pumps, you must be in the flight compartment to continuously monitor the fuel quantity and the low pressure indication in the fuel tank.
(a) Immediately push the applicable fuel pump switch to the off position if the low PRESS light comes on and stays on.

S 725-567
(3) Push the RIGHT C PUMP switch-light of the fuel management panel on the P5 panel to the ON position.

NOTE: The PRESS light will come on and then go off which shows the right override pump has pressure.

S 205-624
(4) Listen for a minimum of 20 seconds at the right override pump to make sure it operates.

NOTE: The right override pump is behind access cover 631AB on the right wing (AMM 06-44-00/201).

BOEING PROPRIETARY - Copyright (C) - Unpublished Work - See title page for details.

S 725-565
(5) Push the RIGHT C PUMP switch-light to the off position.

S 865-641
(6) Close the fueling station door, 521QB (AMM 06-44-00/201).

S 865-642
(7) Move the CH-1 toggle switch of the R N2 Engine Speed Card, M1092, on the P50 panel to the TEST position.

S 015-652
(8) Get access to the right override pump pressure switch on the rear spar.

S 025-653
(9) Disconnect the electrical connector from the pressure switch.

S 425-654
(10) Install a jumper on the right override pump pressure switch connector, D2808, between pins 2 and 3 (WDM 28-42-12).

S 725-558
(11) Push the RIGHT C PUMP switch-light on the P5 panel to the ON position.

S 215-632
(12) Make sure the RIGHT C PUMP PRESS light comes on and stays on.

NOTE: This shows the right override pump has low pressure.

S 725-643
(13) Listen for 15 seconds at the right override pump to make sure it operates then stops.

S 725-557
(14) Push the RIGHT C PUMP switch-light to the off position.

S 025-655
(15) Remove the jumper from the right override pump pressure switch connector, D2808 (WDM 28-42-12).

BOEING PROPRIETARY - Copyright (C) - Unpublished Work - See title page for details.

S 425-656
(16) Connect the electrical connector to the pressure switch.

S 865-644
(17) Move the CH-1 toggle switch of the R N2 Engine Speed Card, M1092, on the P50 panel to the NORMAL position.

S 725-695
(18) For the right override pump, do this procedure: Test of the Override Pumps and Pressure Switches in the Auxiliary Fuel Tank (AMM 28-22-00/501).

H. Put the Airplane Back to Its Usual Condition

S 095-551

WARNING: USE THE PROCEDURE IN AMM 32-00-15/201 TO REMOVE THE DOOR LOCKS. THE DOORS OPEN AND CLOSE QUICKLY AND CAN CAUSE INJURY TO PERSONS AND DAMAGE TO EQUIPMENT.

(1) Remove the door locks from the landing gear doors and close the doors (AMM 32-00-15/201).

S 865-482
(2) Remove electrical power if it is not necessary for other tasks (AMM 24-22-00/201).

TASK 28-22-00-765-593

9. Phase Check of the Fuel Pump Wiring

A. General
(1) This is a check to make sure the three phase power to the fuel boost and override pumps is connected correctly. This check can be used for troubleshooting of wiring problems. It is not necessary to do this test each time the fuel boost or override pump is replaced.

B. Equipment
(1) Indicator - Phase Sequence, to monitor the phase sequence of three-phase power. Model K6, Knopp, Inc., 1307 66th Street, Oakland, CA 94608, U.S.A. or equivalent.

C. References
(1) AMM 24-22-00/201, Electrical Power - Control

BOEING PROPRIETARY - Copyright (C) - Unpublished Work - See title page for details.

(2) WDM 28-22-11, Fuel Boost Pumps - Main Tank
(3) WDM 28-22-12, Fuel Override Boost Pumps - Auxiliary Tanks

D. Access

(1) Location Zones

531	Center Auxiliary Tank (Left)
532	Main Tank - Inboard of Rib No. 10 (Left)
631	Center Auxiliary Tank (Right)
632	Main Tank - Inboard of Rib No. 10 (Right)

(2) Access Panels

531AB	Access Cover (Left)
532AB	Access Cover (Left)
631AB	Access Cover (Right)
632AB	Access Cover (Right)

E. Procedure

S 865-594

(1) Supply electrical power to the airplane (AMM 24-22-00/201).

S 215-595

(2) Make sure the applicable fuel boost or override pump switch-light on the fuel management panel on the overhead panel, P5, is in the off position:
(a) FWD L PUMP
(b) AFT L PUMP
(c) LEFT C PUMP
(d) FWD R PUMP
(e) AFT R PUMP
(f) RIGHT C PUMP

S 015-606

(3) Remove the applicable left (right) access cover to get access to the:
(a) fuel boost pump: 532AB (632AB)

BOEING PROPRIETARY - Copyright (C) - Unpublished Work - See title page for details.

(b) override pump: 531AB (532AB).

S 035-596

(4) To do a phase check of the applicable fuel boost or override pump, disconnect the electrical connector for the applicable fuel boost or override pump (WDM 28-22-11, WDM 28-22-12).

FUEL PUMP	CONNECTOR
Left Forward, M332	D1550
Left Aft, M333	D1542
Left Auxiliary, M636	D2802
Right Forward, M334	D3986
Right Aft, M335	D1540
Right Auxiliary, M637	D2804

S 485-598

(5) Install a phase sequence indicator on the connector for the applicable fuel boost or override pump in the subsequent sequence:
(a) Pin 2 - Phase A
(b) Pin 4 - Phase B
(c) Pin 6 - Phase C

S 865-607

(6) Push the applicable fuel boost or override pump switch-light on the P5 panel to the ON position:
(a) FWD L PUMP
(b) AFT L PUMP
(c) LEFT C PUMP
(d) FWD R PUMP
(e) AFT R PUMP
(f) RIGHT C PUMP

S 765-600

(7) Make sure the phase sequence is A, B, C.

BOEING PROPRIETARY - Copyright (C) - Unpublished Work - See title page for details.

S 865-601
(8) Push the applicable fuel boost or override pump switch-light to the off position.

S 085-602
(9) Disconnect the phase rotation indicator from the applicable fuel boost or override pump.

S 435-609
(10) Connect the applicable electrical connector to the applicable fuel boost or override pump again (WDM 28-22-11, WDM 28-22-12).

FUEL PUMP	CONNECTOR
Left Forward, M332	D1550
Left Aft, M333	D1542
Left Auxiliary, M636	D2802
Right Forward, M334	D3986
Right Aft, M335	D1540
Right Auxiliary, M637	D2804

S 415-608
(11) Install the applicable access cover: 531AB, 631AB, 532AB or 632AB.

S 865-605
(12) Remove electrical power from the airplane if it is not necessary for other tasks (AMM 24-22-00/201).

TASK 28-22-00-715-657
10. AIRPLANES WITH GROUND FAULT INTERRUPTER (GFI);
Ground Fault Interrupter (GFI) - Operational Test and Auxiliary Tank Override/Jettison Pump Uncommanded-On - Functional Test

A. General
(1) ALI - Refer to the task: Airworthiness Limitation Precautions (AMM 28-00-00/201), for important information on airworthiness limitation instructions (ALIs).

NOTE: This is applicable to Airworthiness Limitations 28-AWL-27 and 28-AWL-28.

B. References
(1) AMM 06-44-00/201, Wings (Major Zones 500 and 600) Access Doors and Panels

BOEING PROPRIETARY - Copyright (C) - Unpublished Work - See title page for details.

(2) AMM 24-22-00/201, Electrical Power Control
(3) AMM 28-31-00/501, Fuel Jettison System

C. Access
(1) Location Zone
119 Main Equipment Center (Left and Right)
211 Control Cabin (Left)
212 Control Cabin (Right)
531 Center Auxiliary Tank (Left)
532 Main Tank - Inboard of Rib No. 10 (Left)
631 Center Auxiliary Tank (Right)
632 Main Tank - Inboard of Rib No. 10 (Right)

(2) Access Panel
119AL Electronic Access Door

D. Prepare for Test

S 765-685
(1) Do this procedure: Phase Check of the Fuel Pump Wiring for the applicable fuel boost or override pump (AMM 28-22-00/501) or Phase Check of the Jettison Pump Wiring for the applicable jettison pump (AMM 28-31-00/501).

S 715-669
(2) Do this procedure: Operational Test - Engine Fuel-Feed System for the applicable fuel boost pump (AMM 28-22-00/501).

S 865-658
(3) Make sure these circuit breakers are closed:
(a) Main Power Distribution Panel, P6:
1) 6F15, L FUEL OVRD PUMP
2) 6F21, R FUEL OVRD PUMP
3) 6G15, L AFT FUEL BOOST PUMP
4) 6G18, R FWD FUEL BOOST PUMP
5) 6G21, R AFT FUEL BOOST PUMP
6) 6G24, L FWD FUEL BOOST PUMP
(b) Overhead Circuit Breaker Panel, P11:
1) 11M13, L FUEL JTSN CONT (if installed)
2) 11M15, L CTR FUEL PUMPS
3) 11M16, FUEL PUMPS R FWD/L AFT
4) 11M22, R FUEL JTSN CONT (if installed)
5) 11M24, R CTR FUEL PUMPS
6) 11M25, FUEL PUMPS L FWD/R AFT

BOEING PROPRIETARY - Copyright (C) - Unpublished Work - See title page for details.

(c) AIRPLANES WITH FUEL JETTISON SYSTEM;
On the left miscellaneous electrical equipment panel, P36:
1) 36F4 or 36G7, L FUEL JETT PUMP
(d) AIRPLANES WITH FUEL JETTISON SYSTEM;
On the right miscellaneous electrical equipment panel, P37:
1) 37F4 or 37G4, R FUEL JETT PUMP

S 865-659
(4) Supply electrical power (AMM 24-22-00/201).

S 215-660
(5) Make sure these switch-lights of the fuel management panel on the P5 panel are in the position shown.

SWITCH-LIGHT	POSITION
AFT L PUMP	OFF
AFT R PUMP	OFF
FWD L PUMP	OFF
FWD R PUMP	OFF
LEFT C PUMP	OFF
RIGHT C PUMP	OFF

S 015-661
(6) Open the fueling station door, 521QB (AMM 06-44-00/201).

E. Ground Fault Interrupter (GFI) Relay Operational Test

S 865-663

WARNING: DO NOT OPERATE A FUEL PUMP IF THE LOW PRESSURE LIGHT COMES ON AND STAYS ON. FUEL VAPORS IN THE TANK MAY IGNITE AND CAUSE A FIRE OR EXPLOSION.

(1) To operate any of the fuel pumps, you must be in the flight compartment to continuously monitor the fuel quantity and the low pressure indication in the fuel tank.
(a) Immediately set the applicable fuel pump switch to the off position if the low PRESS light comes on and stays on.

S 865-664
(2) Push the applicable fuel boost pump or fuel override pump switch-light of the fuel management control panel on the P5 overhead panel to the ON position.

BOEING PROPRIETARY - Copyright (C) - Unpublished Work - See title page for details.

S 285-665
(3) Listen and make sure the applicable fuel pump operates.

S 215-666
(4) Make sure the applicable low PRESS light on the P5 overhead panel goes off.

S 865-667
(5) Push the applicable ground fault interrupter (GFI) relay TEST button on either the P140 or P141 panel.
(a) For the right center override fuel pump, the relay is K10696, found on the P141 panel.
(b) For the left center override fuel pump, the relay is K10697, found on the P140 panel.
(c) For the right override/jettison fuel pump, the relay is K10698, found on the P141 panel.
(d) For the left override/jettison fuel pump, the relay is K10699, found on the P140 panel.
(e) For the right aft fuel boost pump, the relay is K10702, found on the P141 panel.
(f) For the left forward fuel boost pump, the relay is K10703, found on the P140 panel.
(g) For the right forward fuel boost pump, the relay is K10704, found on the P141 panel.
(h) For the left aft fuel boost pump, the relay is K10705, found on the P140 panel.

S 215-670
(6) Make sure the RESET button on the applicable GFI relay has moved up, showing a white band.

NOTE: The RESET button located at the top edge of the GFI relay moves up, to expose a narrow white band when the GFI circuit turns off the relay due to a ground fault, or results when you push the TEST button located at the top surface of the relay.

S 285-671
(7) Listen and make sure the applicable fuel pump does not operate.

S 865-672
(8) Put the applicable fuel boost pump or fuel override pump switch-light of the fuel management control panel on the P5 overhead panel to the off position.

BOEING PROPRIETARY - Copyright (C) - Unpublished Work - See title page for details.

S 715-673
(9) To make sure the applicable fuel pump does not operate when the GFI circuit turns off the relay, do the subsequent steps:
(a) Put the applicable fuel pump switch on the fuel management control panel on the P5 overhead panel to the ON position.
(b) Listen and make sure the applicable fuel pump does not operate.
(c) Put the applicable fuel pump switch on the fuel management control panel on the P5 overhead panel, to the off position.

S 865-674
(10) Push the RESET button on the applicable GFI relay in.
(a) Make sure the RESET button does not pop back out and the white band is not visible.

S 865-675
(11) Push the applicable fuel boost pump or fuel override pump switch-light of the fuel management control panel on the P5 overhead panel to the ON position.

S 285-676
(12) Listen and make sure the applicable fuel pump operates.

S 865-677
(13) Put the applicable fuel boost pump or fuel override pump switch-light of the fuel management control panel on the P5 overhead panel to the off position.

S 415-678
(14) Close the fueling station door, 521QB (AMM 06-44-00/201).

S 865-680
(15) Remove electrical power if it is not necessary (AMM 24-22-00/201).

BOEING PROPRIETARY - Copyright (C) - Unpublished Work - See title page for details.

ENGINE FUEL SHUTOFF VALVE - REMOVAL/INSTALLATION

1. General
   A. There are two engine fuel shutoff valves: one in the left main fuel tank and one in the right main fuel tank. Each engine fuel shutoff valve contains three parts: the actuator, adapter shaft and valve body. The actuator is installed on the rear spar of the wing, out of the fuel tank. The adapter shaft and valve body are installed on the rear spar of the wing, in the fuel tank.
   B. This procedure contains five tasks. The first task removes the valve body of the engine fuel shutoff valve. The second task installs the valve body of the engine fuel shutoff valve. The third task removes the adapter shaft of the engine fuel shutoff valve. The fourth task installs the adapter shaft of the engine fuel shutoff valve. The fifth task aligns the adapter shaft of the engine fuel shutoff valve.
   C. The removal/installation procedure for the actuator of the engine fuel shutoff valve is in AMM 28-22-11/401.

TASK 28-22-01-004-001

2. Remove the Valve Body of the Engine Fuel Shutoff Valve
   A. References
      (1) AMM 06-44-00/201, Wing Access Doors and Panels
      (2) AMM 28-11-00/201, Fuel Tanks (Purging and Entry)
      (3) AMM 28-11-01/401, Main Tank Access Door
      (4) AMM 28-11-07/401, Fuel Tank Baffle Door
      (5) AMM 28-26-00/201, Defueling
   B. Access
      (1) Location Zones
          532 Main Tank - Inboard of Rib No. 10 (Left)
          551 Rear Spar to MLG Support Beam (Left)
          632 Main Tank - Inboard of Rib No. 10 (Right)
          651 Rear Spar to MLG Support Beam (Right)

      (2) Access Panels
          532AZ Fuel Tank Baffle Door (Left)
          532BB Main Tank Access Door (Left)
          551TB Trailing Edge Skin Panel (Left)
          632AZ Fuel Tank Baffle Door (Right)
          632BB Main Tank Access Door (Right)
          651TB Trailing Edge Skin Panel (Right)

   C. Procedure

      S 014-004
      (1) For the left engine fuel shutoff valve, remove the left trailing edge skin panel, 551TB (AMM 06-44-00/201).

BOEING PROPRIETARY - Copyright (C) - Unpublished Work - See title page for details.

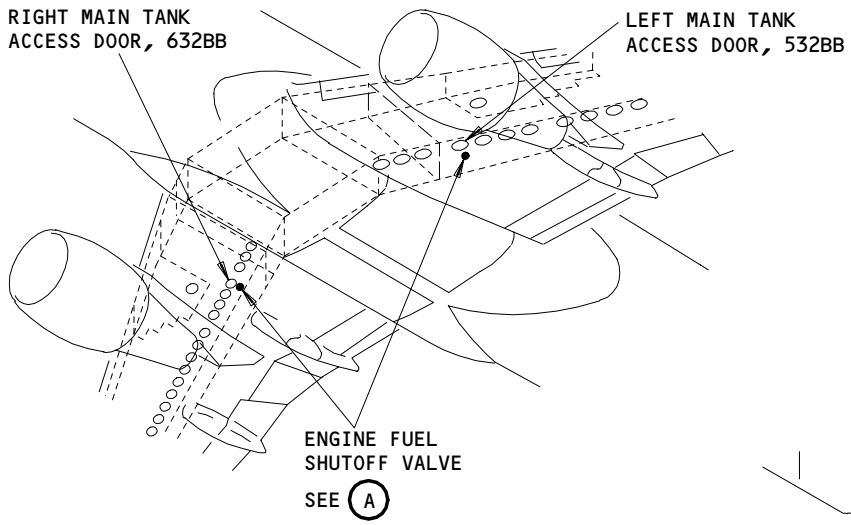

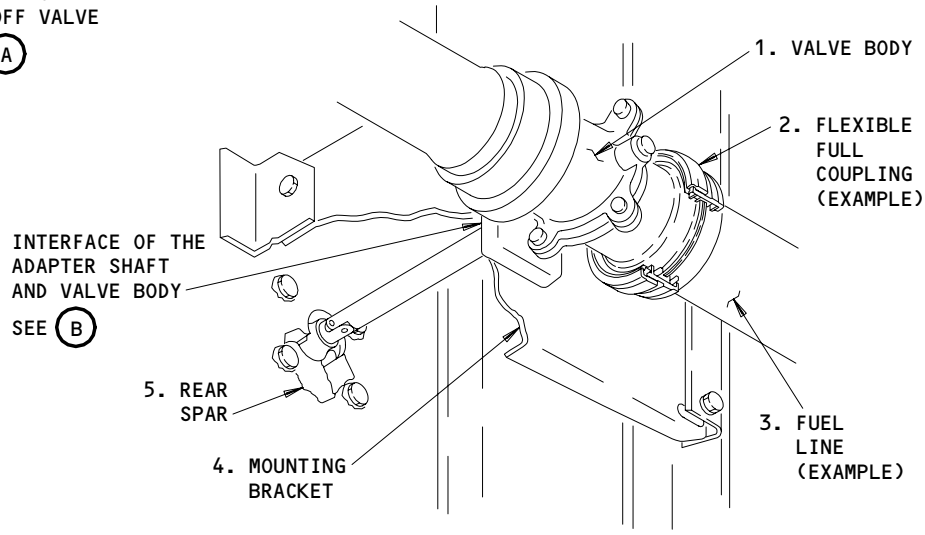

ENGINE FUEL SHUTOFF VALVE

A

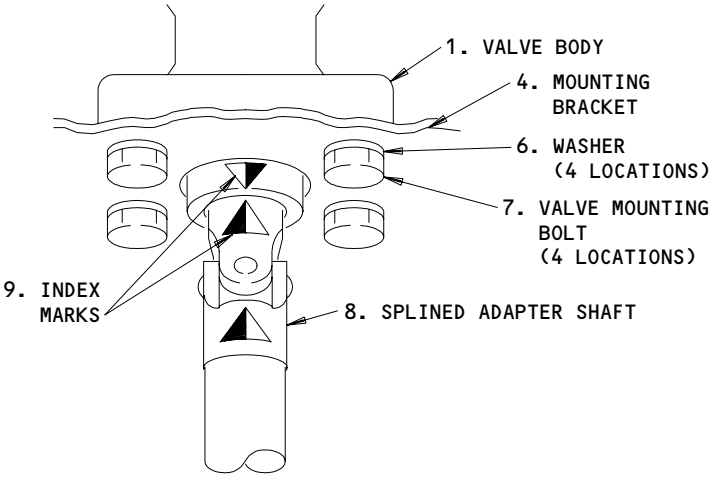

INTERFACE OF THE ADAPTER
SHAFT AND VALVE BODY

B

Engine Fuel Shutoff Valve Installation
Figure 401

BOEING PROPRIETARY - Copyright (C) - Unpublished Work - See title page for details.

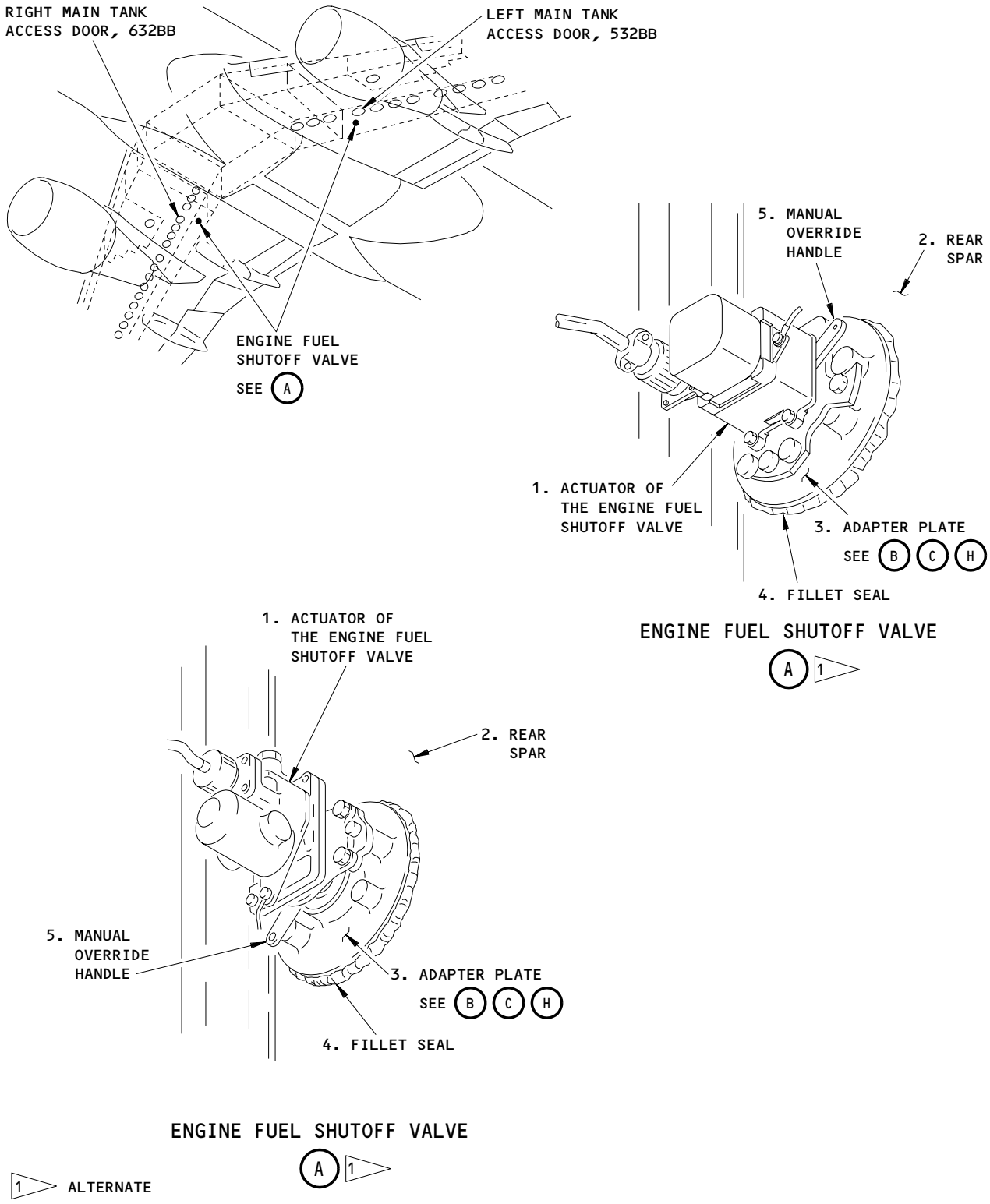

Engine Fuel Shutoff Valve Adapter Shaft Installation
Figure 402 (Sheet 1)

BOEING PROPRIETARY - Copyright (C) - Unpublished Work - See title page for details.

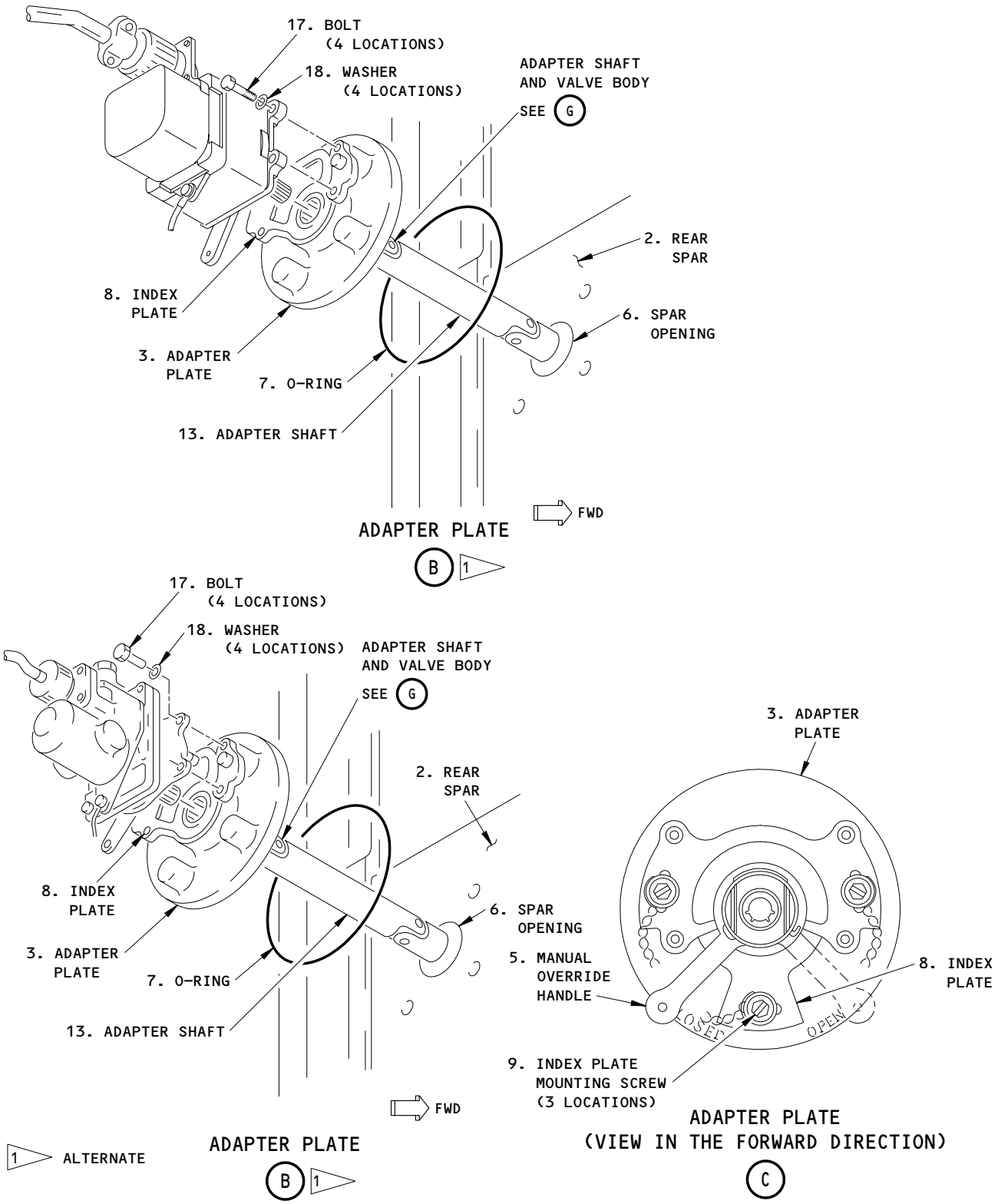

Engine Fuel Shutoff Valve Adapter Shaft Installation
Figure 402 (Sheet 2)

BOEING PROPRIETARY - Copyright (C) - Unpublished Work - See title page for details.

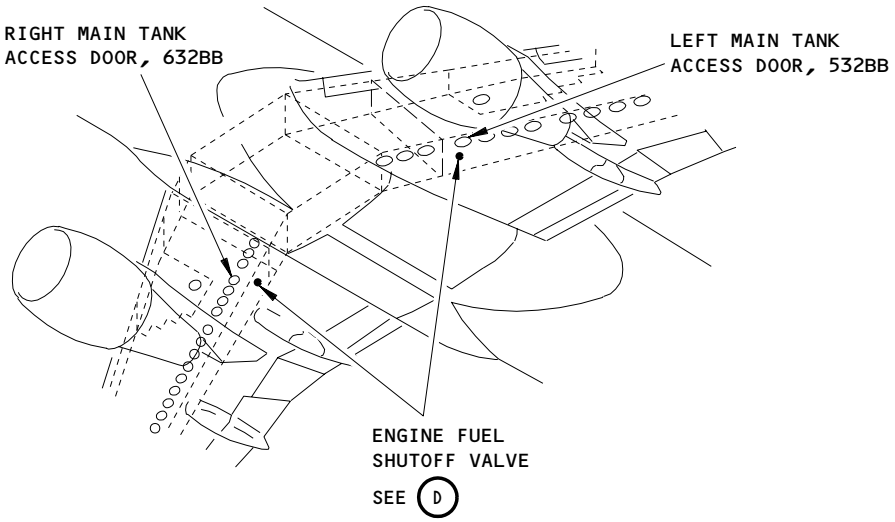

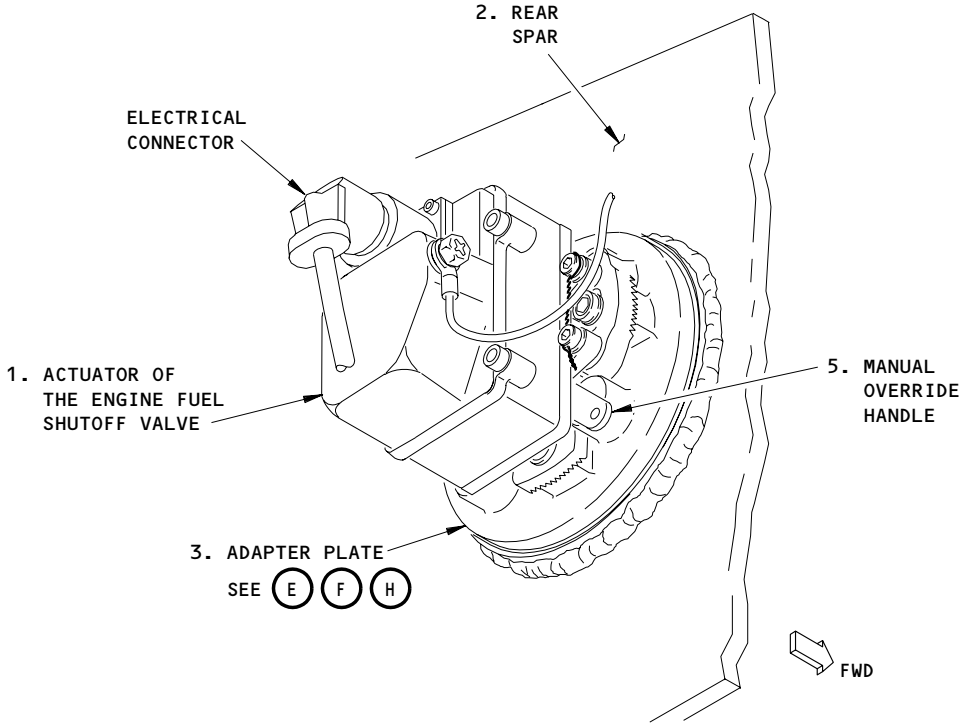

ENGINE FUEL SHUTOFF VALVE

D 2

2 RECOMMENDED

Engine Fuel Shutoff Valve Adapter Shaft Installation
Figure 402 (Sheet 3)

BOEING PROPRIETARY - Copyright (C) - Unpublished Work - See title page for details.

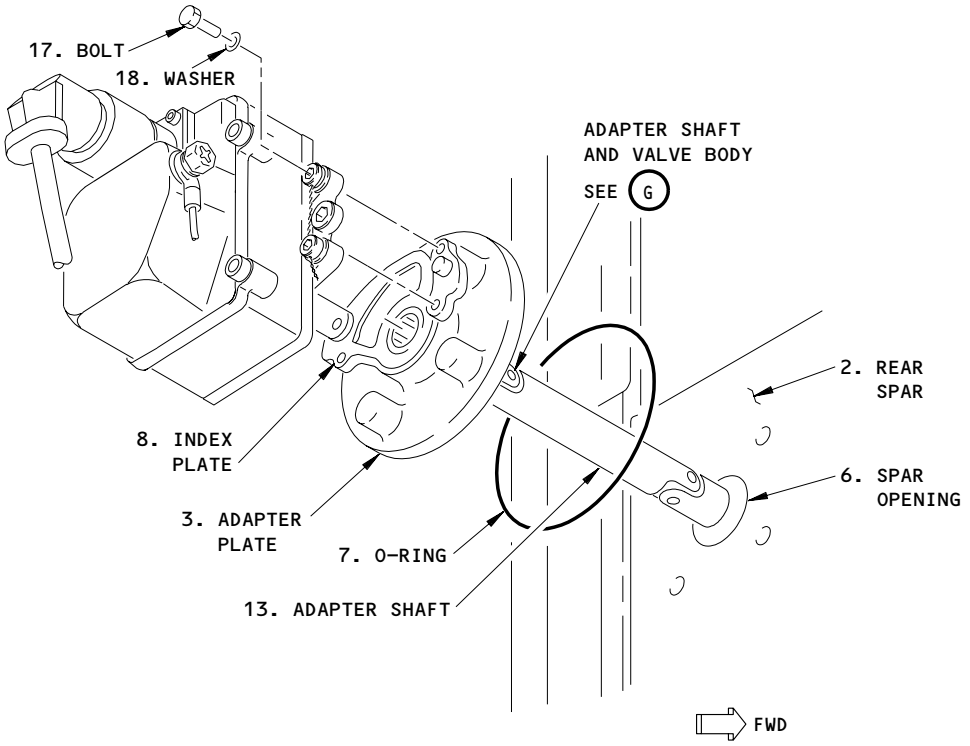

ADAPTER PLATE

E 2

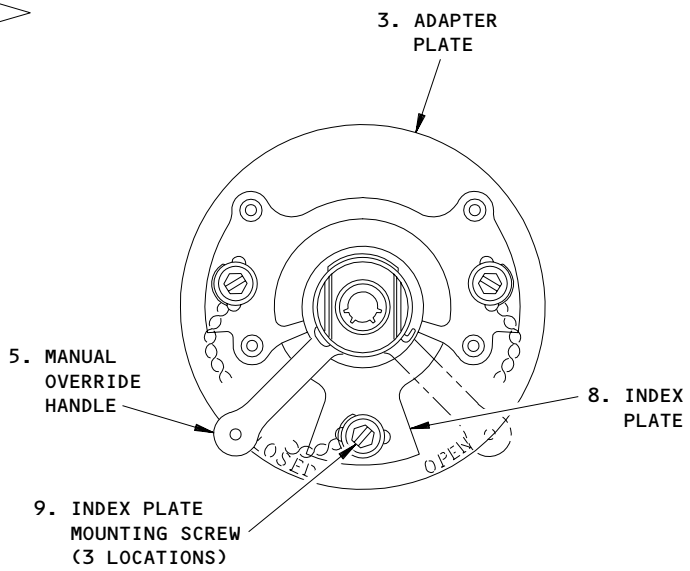

ADAPTER PLATE
(VIEW IN THE FORWARD DIRECTION)

F

Engine Fuel Shutoff Valve Adapter Shaft Installation
Figure 402 (Sheet 4)

BOEING PROPRIETARY - Copyright (C) - Unpublished Work - See title page for details.

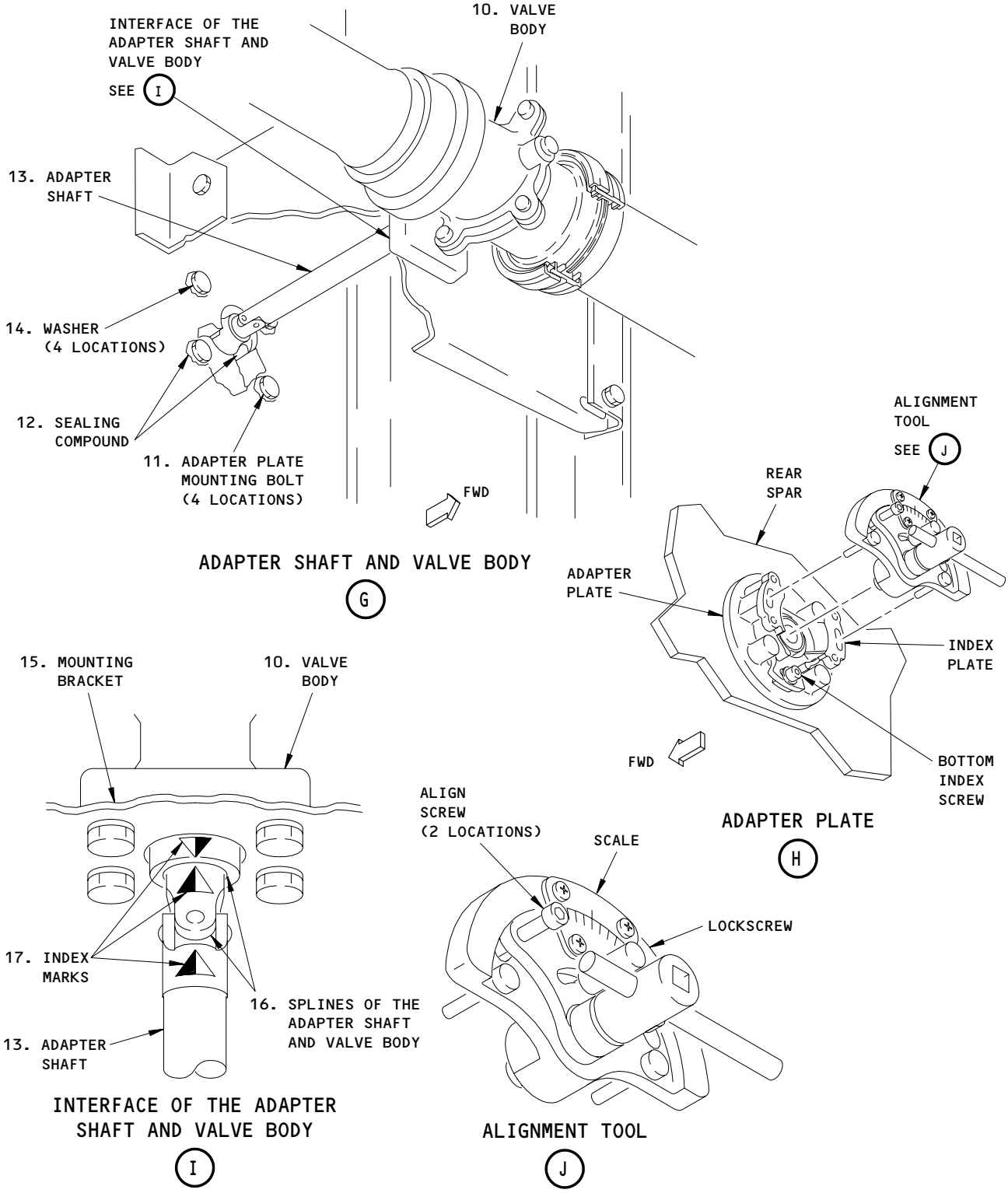

Engine Fuel Shutoff Valve Adapter Shaft Installation
Figure 402 (Sheet 5)

BOEING PROPRIETARY - Copyright (C) - Unpublished Work - See title page for details.

S 014-005
(2) For the right engine fuel shutoff valve, remove the right trailing edge skin panel, 651TB (AMM 06-44-00/201).

S 984-006
(3) Put the manual override handle on the actuator in the CLOSED position (Fig. 402).

S 654-068
(4) Defuel the applicable fuel tank (AMM 28-26-00/201).

S 014-007
(5) Remove the applicable left or right main tank access door, 532BB or 632BB (AMM 28-11-01/401).

S 944-002

WARNING: OBEY THE PURGING AND FUEL TANK ENTRY PRECAUTIONS. FAILURE TO OBEY THE PRECAUTIONS COULD CAUSE INJURY TO PERSONS OR DAMAGE TO EQUIPMENT.

(6) Do the Purging and Fuel Tank Entry procedure (AMM 28-11-00/201).

S 014-115
(7) Remove the applicable left or right fuel tank baffle door, 532AZ or 632AZ (AMM 28-11-07/401).

S 034-008
(8) Disconnect the flexible full couplings (2) between the valve body (1) and fuel lines (3) (View A, Fig. 401).

S 024-009
(9) Remove the valve mounting bolts (7) that attach the valve body (1) to the mounting bracket (4) (View B, Fig. 401).

S 024-010
(10) Disengage the valve body (1) from the splined adapter shaft (8).

S 024-003
(11) Remove the valve body (1).

TASK 28-22-01-404-011
3. Install the Valve Body of the Engine Fuel Shutoff Valve

BOEING PROPRIETARY - Copyright (C) - Unpublished Work - See title page for details.

A. References
(1) AMM 06-44-00/201, Wing Access Doors and Panels
(2) AMM 12-11-01/301, Fuel Tank Pressure Fueling
(3) AMM 20-10-21/601, Electrical Bonding
(4) AMM 24-22-00/201, Electrical Power Control
(5) AMM 28-11-00/201, Fuel Tanks (Purging and Entry)
(6) AMM 28-11-01/401, Main Tank Access Door
(7) AMM 28-11-07/401, Fuel Tank Baffle Door

B. Access
(1) Location Zones
532 Main Tank - Inboard of Rib No. 10 (Left)
551 Rear Spar to MLG Support Beam (Left)
632 Main Tank - Inboard of Rib No. 10 (Right)
651 Rear Spar to MLG Support Beam (Right)

(2) Access Panels
532AZ Fuel Tank Baffle Door (Left)
532BB Main Tank Access Door (Left)
551TB Trailing Edge Skin Panel (Left)
632AZ Fuel Tank Baffle Door (Right)
632BB Main Tank Access Door (Right)
651TB Trailing Edge Skin Panel (Right)

C. Procedure

S 214-050
(1) Make sure the manual override handle of the actuator is in the CLOSED position (Fig. 402).

S 944-051

WARNING: OBEY THE FUEL TANK ENTRY PRECAUTIONS. FAILURE TO OBEY THE FUEL TANK ENTRY PRECAUTIONS COULD CAUSE INJURY TO PERSONS OR DAMAGE TO EQUIPMENT.

(2) Obey the fuel tank entry precautions (AMM 28-11-00/201).

S 014-012
(3) Go into the fuel tank.

BOEING PROPRIETARY - Copyright (C) - Unpublished Work - See title page for details.

S 424-013
(4) Engage the valve body (1) on the splined adapter shaft (8) (View B, Fig. 401).

S 214-052
(5) Make sure the mark on the splined adapter shaft (8) and the index marks (9) on the valve body (1) align.

S 424-014
(6) Install the valve mounting bolts (7) to connect the valve body (1) to the mounting bracket (4).

S 434-015
(7) Put the fuel lines (3) in position on the valve body (1) and install the flexible full couplings (2) (View A, Fig. 401).

S 224-016
(8) Make sure the bonding resistance between the actuator and the airplane structure is not more than 0.005 ohms (AMM 20-10-21/601).

S 164-053

CAUTION: MAKE SURE YOU REMOVE ALL UNWANTED PARTICLES FROM IN THE FUEL TANK. UNWANTED PARTICLES CAN BLOCK THE PUMPS AND PREVENT THE SCAVENGE OF FUEL AND WATER.

(9) Remove all unwanted materials from the fuel tank.

S 414-106
(10) Install the applicable left or right engine fuel tank baffle door, 532AZ or 632AZ (AMM 28-11-07/401).

S 414-017
(11) Install the applicable left or right main tank access door, 532BB or 632BB (AMM 28-11-01/401).

S 864-019
(12) Supply electrical power (AMM 24-22-00/201).

S 714-018
(13) Do the steps that follow to do a test of the engine fuel shutoff valve:
- (a) Make sure the manual override handle (5) of the actuator (1) is in the CLOSED position (Fig. 402).
- (b) Put the applicable L or R FUEL CONTROL switch on the quadrant stand, P10, to the RUN position.
  - 1) Make sure the amber SPAR VALVE light on the P10 panel comes on and then goes off.
  - 2) Make sure the manual override handle (5) on the actuator (1) moves to the OPEN position.

BOEING PROPRIETARY - Copyright (C) - Unpublished Work - See title page for details.

(c) Put the applicable L or R FUEL CONTROL switch on the P10 panel to the CUTOFF position.
1) Make sure the amber SPAR VALVE light on the P10 panel comes on and then goes off.

S 414-020
(14) Install the applicable left or right trailing edge skin panel, 551TB or 651TB (AMM 06-44-00/201).

S 654-021
(15) Refuel the applicable fuel tank (AMM 12-11-01/301).

S 214-054
(16) Make sure there are no fuel leaks.

S 864-022
(17) Remove electrical power if it is not necessary (AMM 24-22-00/201).

TASK 28-22-01-004-055
4. Remove the Adapter Shaft of the Engine Fuel Shutoff Valve (Fig. 402)
A. General
(1) The adapter shaft of the engine fuel shutoff valve has an index plate (8) and an adapter shaft (13). The adapter shaft (13) has an adapter plate (3) and a shaft.
B. References
(1) AMM 06-44-00/201, Wing Access Doors and Panels
(2) AMM 28-11-00/201, Fuel Tanks (Purging and Entry)
(3) AMM 28-11-01/401, Main Tank Access Door
(4) AMM 28-11-07/401, Fuel Tank Baffle Door
(5) AMM 28-22-11/401, Engine Fuel Shutoff Valve Actuator
(6) AMM 28-26-00/201, Defueling
C. Access
(1) Location Zones
532 Main Tank - Inboard of Rib No. 10 (Left)
551 Rear Spar to MLG Support Beam (Left)
632 Main Tank - Inboard of Rib No. 10 (Right)
651 Rear Spar to MLG Support Beam (Right)

(2) Access Panels
532AZ Fuel Tank Baffle Door (Left)
532BB Main Tank Access Door (Left)
551TB Trailing Edge Skin Panel (Left)
632AZ Fuel Tank Baffle Door (Right)
632BB Main Tank Access Door (Right)
651TB Trailing Edge Skin Panel (Right)

D. Procedure

S 014-023
(1) For the left engine fuel shutoff valve, remove the left trailing edge skin panel, 551TB (AMM 06-44-00/201).

BOEING PROPRIETARY - Copyright (C) - Unpublished Work - See title page for details.

S 014-024
(2) For the right engine fuel shutoff valve, remove the right trailing edge skin panel, 651TB (AMM 06-44-00/201).

S 654-069
(3) Defuel the applicable fuel tank (AMM 28-26-00/201).

S 984-025
(4) Put the manual override handle (5) in the CLOSED position.

S 034-026
(5) Remove the actuator (1) of the engine fuel shutoff valve (AMM 28-22-11/401).

S 014-027
(6) Remove the applicable left or right main tank access door, 532BB or 632BB (AMM 28-11-01/401).

S 944-056

WARNING: OBEY THE PURGING AND FUEL TANK ENTRY PRECAUTIONS. FAILURE TO OBEY THE PRECAUTIONS COULD CAUSE INJURY TO PERSONS OR DAMAGE TO EQUIPMENT.

(7) Do the Purging and Fuel Tank Entry procedure (AMM 28-11-00/201).

S 014-116
(8) Remove the applicable left or right fuel tank baffle door, 532AZ or 632AZ (AMM 28-11-07/401).

S 034-028
(9) Remove the adapter plate mounting bolts (11) and washers (14) (View G).

S 024-029
(10) Disengage the adapter shaft (13) from the valve body (10) (View I).

S 024-057
(11) Remove the adapter shaft (13) (with the index plate (8) attached) through the spar opening (6).

TASK 28-22-01-404-030
5. Install the Adapter Shaft of the Engine Fuel Shutoff Valve (Fig. 402)
A. General
(1) The adapter shaft of the engine fuel shutoff valve has an index plate (8) and an adapter shaft (13). The adapter shaft (13) has an adapter plate (3) and a shaft.
B. Consumable Materials
(1) G00034 Cotton Wiper, Process Cleaning Absorbent Wiper (cheesecloth, gauze) BMS15-5

BOEING PROPRIETARY - Copyright (C) - Unpublished Work - See title page for details.

(2) G50021 - Scotch-Brite 96W pad
(3) D0054 - Petrolatum grease
(4) C00064 Coating - Chemical Conversion Coating for Aluminum or Aluminum Alloys, MIL-C-5541 (MIL-C-81706) - Alodine 600
(5) C00307 BMS 10-20, Type II Class A - Finish, Corrosion Resistant
(6) A00247 Chromate Type Sealant - BMS 5-95, Class B
(7) A00767 Sealant - Integral Fuel Tank BMS 5-45
(8) B01008 Solvent - Series 88
(9) B01012 Solvent - Series 92

C. References
(1) AMM 06-44-00/201, Wing Access Doors and Panels
(2) AMM 12-11-01/301, Fuel Tank Pressure Fueling
(3) AMM 20-30-88/201, Airplane Structure Cleaning Solvents (Series 88)
(4) AMM 20-30-92/201, Airplane Structure Cleaning Solvents (Series 92)
(5) AMM 24-22-00/201, Electrical Power Control
(6) AMM 28-11-00/201, Fuel Tanks (Purging and Entry)
(7) AMM 28-11-01/401, Main Tank Access Door
(8) AMM 28-11-07/401, Fuel Tank Baffle Door
(9) AMM 28-22-11/401, Engine Fuel Shutoff Valve Actuator
(10) AMM 51-31-01/201, Seals and Sealing
(11) SWPM 20-20-00, Electrical Bonding and Grounds

D. Equipment
(1) Brush - Soft Bristle
(2) BAC5000 - Sealant Removal Tool

E. Access
(1) Location Zones

532	Main Tank - Inboard of Rib No. 10 (Left)
551	Rear Spar to MLG Support Beam (Left)
632	Main Tank - Inboard of Rib No. 10 (Right)
651	Rear Spar to MLG Support Beam (Right)

(2) Access Panels

532AZ	Fuel Tank Baffle Door (Left)
532BB	Main Tank Access Door (Left)
551TB	Trailing Edge Skin Panel (Left)
632AZ	Fuel Tank Baffle Door (Right)
632BB	Main Tank Access Door (Right)
651TB	Trailing Edge Skin Panel (Right)

F. AIRPLANES WITHOUT ACTUATOR MA20A2027 OR MA30A1001;
Install the Adapter Shaft of the Engine Fuel Shutoff Valve

S 214-058
(1) Make sure the area on the rear spar that you will put the adapter plate (3) on is clean.

S 434-031
(2) Install a new O-ring (7) on the adapter plate (3).

BOEING PROPRIETARY - Copyright (C) - Unpublished Work - See title page for details.

S 424-032
(3) Install the adapter shaft (13) through the spar opening (6).

S 944-059

WARNING: OBEY THE FUEL TANK ENTRY PRECAUTIONS. FAILURE TO OBEY THE FUEL TANK ENTRY PRECAUTIONS COULD CAUSE INJURY TO PERSONS OR DAMAGE TO EQUIPMENT.

(4) Obey the fuel tank entry precautions (AMM 28-11-00/201).

S 014-033
(5) Go into the fuel tank.

S 424-034
(6) Engage the splines of the adapter shaft and valve body (16) (View I).

S 424-035
(7) Put the adapter plate (3) in position.

S 424-060
(8) Install the four adapter plate mounting bolts (11) and washers (14) to attach the adapter plate (3) (View G).

S 394-036
(9) Apply the sealing compound (12) around the interface of the adapter plate (3) and the rear spar and hole in the center (AMM 51-31-01/201).

S 214-061
(10) Make sure the sealing compound does not cause the engine fuel shutoff valve to operate incorrectly.

S 824-071
(11) Do this task: Adapter Shaft Alignment.

S 434-065
(12) Install lockwire on the index plate mounting screws (9).

S 224-041
(13) Make sure the bonding resistance between the adapter plate (3) and the airplane structure is not more than 0.005 ohms (SWPM 20-20-00).

S 394-042
(14) Apply a fillet seal (4) between the adapter plate (3) and the rear spar (2) with chromate type sealant (AMM 51-31-01/201).

BOEING PROPRIETARY - Copyright (C) - Unpublished Work - See title page for details.

S 434-043
(15) Install the actuator (1) of the engine fuel shutoff valve (AMM 28-22-11/401).

S 414-109
(16) Install the applicable left or right engine fuel tank baffle door, 532AZ or 632AZ (AMM 28-11-07/401).

S 414-044
(17) Close the applicable left or right main tank access door, 532BB or 632BB (AMM 28-11-01/401).

S 864-046
(18) Supply electrical power (AMM 24-22-00/201).

G. AIRPLANES WITH ACTUATOR MA20A2027 OR MA30A1001;
Install the Adapter Shaft of the Engine Fuel Shutoff Valve

S 124-118
(1) Remove the old sealant and clean the rear spar, adapter shaft (13), index plate (8), and fasteners (if reused).
(a) Use the sealant removal tool and sealant removal tool handle (or equivalent) to remove the old sealant from the rear spar.
(b) If new parts are to be installed, use an abrasive pad to remove the anodized finish from the faying surfaces of the adapter shaft (13) and index plate (8) (SWPM 20-20-00).

WARNING: DO NOT GET SOLVENTS IN YOUR MOUTH, YOUR EYES, OR ON YOUR SKIN. DO NOT BREATHE THE FUMES FROM SOLVENTS. SOLVENTS ARE DANGEROUS MATERIALS. SOLVENTS CAN BE FLAMMABLE. OBEY THE MATERIAL SAFETY DATA SHEETS (MSDS) FOR SOLVENTS. OBEY LOCAL REGULATIONS FOR THE CORRECT PROCEDURES TO USE OR DISCARD SOLVENTS. SOLVENTS CAN CAUSE INJURIES TO PERSONNEL AND DAMAGE TO EQUIPMENT.

(c) To remove the remaining sealant, grease, oil, dirt, and other contamination from the components, use one of these items soaked with Series 92 solvent (AMM 20-30-92/201).
1) soft bristle brush
2) cotton wiper
3) Scotch-Brite 96W pad

S 114-119
(2) Do these steps to prepare the adapter plate (3) of the adapter shaft (13) and the rear spar for a fillet sealed electrical faying surface bond (SWPM 20-20-00):

BOEING PROPRIETARY - Copyright (C) - Unpublished Work - See title page for details.

WARNING: DO NOT GET SOLVENTS IN YOUR MOUTH, YOUR EYES, OR ON YOUR SKIN. DO NOT BREATHE THE FUMES FROM SOLVENTS. SOLVENTS ARE DANGEROUS MATERIALS. SOLVENTS CAN BE FLAMMABLE. OBEY THE MATERIAL SAFETY DATA SHEETS (MSDS) FOR SOLVENTS. OBEY LOCAL REGULATIONS FOR THE CORRECT PROCEDURES TO USE OR DISCARD SOLVENTS. SOLVENTS CAN CAUSE INJURIES TO PERSONNEL AND DAMAGE TO EQUIPMENT.

(a) Final clean the contact surfaces of the adapter plate (3) and the rear spar with a cotton wiper soaked with Series 88 solvent (AMM 20-30-88/201).
(b) Rub dry with a clean, dry cotton wiper.
(c) Continue to clean and dry the surface until the dry cotton wiper stays clean.

S 434-120

(3) While outside of the airplane fuel tank, do these steps:
(a) Put a thin layer of petrolatum grease on the new o-ring (7).
(b) Put the o-ring (7) in the o-ring groove of the adapter plate (3).
(c) Put the shaft of the adapter shaft (13) through the spar opening (6) in the rear spar (2).
(d) Make sure the shoulder of the adapter shaft (13) does not bind in the opening of the rear spar.

S 864-121

WARNING: OBEY THE FUEL TANK ENTRY PRECAUTIONS. FAILURE TO OBEY THE FUEL TANK ENTRY PRECAUTIONS COULD CAUSE INJURY TO PERSONS OR DAMAGE TO EQUIPMENT.

(4) Obey the fuel tank entry precautions (AMM 28-11-00/201).

S 014-122

WARNING: DO THE PURGING AND FUEL TANK ENTRY PROCEDURE. FAILURE TO FOLLOW THE PURGING AND FUEL TANK ENTRY PROCEDURE COULD CAUSE INJURIES TO PERSONS OR DAMAGE TO EQUIPMENT.

(5) Go into the the fuel tank to the engine fuel shutoff valve location (AMM 28-11-00/201).

S 424-123

(6) Do these steps to install the adapter shaft (13):
(a) Make sure that the index marks (17) on the valve body (10) and adapter shaft (13) are aligned (Fig. 402, View I).

NOTE: A small misalignment of the index marks is satisfactory.

BOEING PROPRIETARY - Copyright (C) - Unpublished Work - See title page for details.

(b) Engage the shaft of the adapter shaft (13) with the valve body (10).
(c) Apply sealant (12) to the shank and the threads of the four adapter plate mounting bolts (11).

NOTE: CDCCL - Refer to the task: Airworthiness Limitation Precautions (AMM 28-00-00/201), for important information on Critical Design Configuration Control Limitations (CDCCLs).

NOTE: This is applicable to Airworthiness Limitation 28-AWL-23.

1) Use BMS5-45 Class B sealant for the wet installation of the adapter plate mounting bolts (11).
2) Make sure the sealant applied to the fasteners is approximately 0.060 inch (1.52 mm) thick.

(d) Install the adapter plate mounting bolts (11) and washers (14) to attach the adapter plate (3) of the adapter shaft (13) to the rear spar (2).
(e) Make sure the gap between the adapter shaft (13) and the valve body spline is 0.20 +/- 0.20 inch (5.1 +/- 5.1 mm).

NOTE: If the correct gap can not be obtained, loosen the support bracket for the valve body (10) and adjust its position to get the correct gap.

S 764-124
(7) On the outside of the fuel tank, measure the bonding resistance between one of the raised serrated surfaces of the adapter plate (3) (bare metal surface) and the rear spar.
(a) Make sure the resistance is 0.0005 ohm (0.5 milliohm) or less.

NOTE: CDCCL - Refer to the task: Airworthiness Limitation Precautions (AMM 28-00-00/201), for important information on Critical Design Configuration Control Limitations (CDCCLs).

NOTE: This is applicable to Airworthiness Limitation 28-AWL-23.

BOEING PROPRIETARY - Copyright (C) - Unpublished Work - See title page for details.

S 424-125
(8) On the inside of the tank, apply a fillet seal of BMS5-45 Class B sealant to these components (AMM 51-31-01/201):

NOTE: CDCCL - Refer to the task: Airworthiness Limitation Precautions (AMM 28-00-00/201), for important information on Critical Design Configuration Control Limitations (CDCCLs).

NOTE: This is applicable to Airworthiness Limitation 28-AWL-23.

(a) The four adapter plate mounting bolts (11).
(b) The periphery of the rear spar penetration and the stationary part of the adapter shaft (13).

NOTE: Make sure the sealant does not touch any part of the adapter shaft (13) that turns.

S 424-126
(9) On the outside of the fuel tank, apply a fillet seal of BMS5-45 Class B sealant around the periphery of the adapter plate (3) (AMM 51-31-01/201).

NOTE: CDCCL - Refer to the task: Airworthiness Limitation Precautions (AMM 28-00-00/201), for important information on Critical Design Configuration Control Limitations (CDCCLs).

NOTE: This is applicable to Airworthiness Limitation 28-AWL-23.

S 414-130
(10) Close the applicable main tank access door, 532BB or 632BB (AMM 28-11-01/401).

S 824-133
(11) Do this task: Adapter Shaft Alignment.

H. Install the Index Plate

S 824-134
(1) Do this procedure after you have correctly aligned and marked the alignment position of the index plate and adapter plate (3) per this task: Adapter Shaft Alignment.

S 024-135
(2) Remove the mounting screws (9) and washers and remove the index plate (8) from the adapter plate (3) of the adapter shaft (13).

BOEING PROPRIETARY - Copyright (C) - Unpublished Work - See title page for details.

S 424-136

(3) Do these steps to prepare the index plate (8) and the adapter plate (3) for a sealed electrical faying surface bond (SWPM 20-20-00).

(a) Protect the alignment reference mark when you clean the index plate (8) and the adapter plate (3) for the electrical bond.

WARNING: DO NOT GET SOLVENTS IN YOUR MOUTH, YOUR EYES, OR ON YOUR SKIN. DO NOT BREATHE THE FUMES FROM SOLVENTS. SOLVENTS ARE DANGEROUS MATERIALS. SOLVENTS CAN BE FLAMMABLE. OBEY THE MATERIAL SAFETY DATA SHEETS (MSDS) FOR SOLVENTS. OBEY LOCAL REGULATIONS FOR THE CORRECT PROCEDURES TO USE OR DISCARD SOLVENTS. SOLVENTS CAN CAUSE INJURIES TO PERSONNEL AND DAMAGE TO EQUIPMENT.

(b) Final clean the contact surfaces with a cotton wiper soaked with Series 88 solvent (AMM 20-30-88/201).

(c) Rub dry with a clean, dry cotton wiper.

(d) Continue to clean and dry the surface until the dry cotton wiper stays clean.

(e) Apply a thin continuous layer of sealant to the serrated surface of the index plate (8) (three locations).

NOTE: CDCCL - Refer to the task: Airworthiness Limitation Precautions (AMM 28-00-00/201), for important information on Critical Design Configuration Control Limitations (CDCCLs).

NOTE: This is applicable to Airworthiness Limitation 28-AWL-23.

1) Use Pro Seal 890A or PR-1440A sealant for the faying surface seal.

2) Make sure the sealant layer is approximately 0.005 inch (0.127 mm) thick.

(f) Apply sealant to the shank and the threads of the mounting screws (9).

NOTE: CDCCL - Refer to the task: Airworthiness Limitation Precautions (AMM 28-00-00/201), for important information on Critical Design Configuration Control Limitations (CDCCLs).

NOTE: This is applicable to Airworthiness Limitation 28-AWL-23.

1) Use Pro Seal 890A or PR-1440A sealant for the wet installation of the mounting screws (9).

2) Make sure the sealant applied to the fasteners is approximately 0.060 inch (1.52 mm) thick.

BOEING PROPRIETARY - Copyright (C) - Unpublished Work - See title page for details.

S 424-137

(4) Do these steps to install the index plate (8).
   (a) Align the index plate (8) and the adapter plate (3) with the alignment reference mark that you made during the adapter shaft alignment procedure.
   (b) Install the two mounting screws (9) and washers in the top index mounting hole positions.
   (c) Install the mounting screw (9) and washer in the bottom index mounting hole position.
   (d) Tighten the screws to 22 +/- 1 in-lb (2.5 +/- 0.1 Nm).
   (e) Make sure the sealant is continuously squeezed out along the edges of the contact surfaces.
   (f) If there are gaps, bubbles or voids in the sealant squeeze out, then disassemble and apply more sealant.
   (g) Shape the squeezed out sealant into a fillet seal (AMM 51-31-01/201).
   (h) As an option, remove the extra squeezed out sealant.

   NOTE: Make sure the sealant that remains is flush with the mating part edges.

S 764-138

(5) Measure the bonding resistance between one of the actuator attachment contact surfaces on the index plate (8) (bare metal surface) and the rear spar.
   (a) Make sure the bonding resistance is 0.002 ohm (2 milliohm) or less.

S 424-139

(6) Lockwire the mounting screws (9) and the index plate (8) together.

S 794-140

(7) Do this task: Install the Actuator of the Engine Fuel Shutoff Valve (AMM 28-22-11/401).

S 374-141

(8) Do this task to apply protective finishes to the bare areas of the rear spar: Apply the Corrosion Resistant Finish (Topcoat) (AMM 28-11-00/701).

   NOTE: Re-apply the protective finishes to the rear spar where the electrical bonding probes removed the finishes.

   (a) These are the protective finishes:
      1) Alodine 600 coating
      2) BMS 10-20 coating

BOEING PROPRIETARY - Copyright (C) - Unpublished Work - See title page for details.

I. Operational Test for the Engine Fuel Shutoff Valve

S 714-045

(1) Do the steps that follow to do a test of the engine fuel shutoff valve:

(a) Make sure the manual override handle (5) of the actuator (1) is in the CLOSED position.

(b) Put the applicable L or R FUEL CONTROL switch on the quadrant stand, P10, to the RUN position.

1) Make sure the amber SPAR VALVE light on the P10 stand comes on and then goes off.

(c) Make sure the manual override handle moves to the OPEN position.

(d) Put the applicable L or R FUEL CONTROL switch on the P10 panel to the CUTOFF position.

1) Make sure the amber SPAR VALVE light on the P10 panel comes on and then goes off.

J. Put the Airplane Back to its Usual Condition

S 414-047

(1) Install the applicable left or right trailing edge skin panel, 551TB or 651TB (AMM 06-44-00/201).

S 654-048

(2) Refuel the applicable fuel tank (AMM 12-11-01/301).

S 214-067

(3) Make sure there are no fuel leaks.

S 864-049

(4) Remove electrical power if it is not necessary (AMM 24-22-00/201).

TASK 28-22-01-824-072

6. Adapter Shaft Alignment (Fig. 402)

A. Equipment

(1) B28009-1, Adapter Shaft Alignment Tool

(2) Torque meter - 0-15 pound-inches, with a resolution of +/- 1 pound-inches (optional)

B. References

(1) AMM 28-22-11/401, Engine Fuel Shutoff Valve Actuator

C. Access

(1) Location Zones

532 Main Tank - Inboard of Rib No. 10 (Left)
551 Rear Spar to MLG Support Beam (Left)
632 Main Tank - Inboard of Rib No. 10 (Right)
651 Rear Spar to MLG Support Beam (Right)

BOEING PROPRIETARY - Copyright (C) - Unpublished Work - See title page for details.

(2) Access Panels

532BB	Main Tank Access Door (Left)
551TB	Trailing Edge Skin Panel (Left)
632BB	Main Tank Access Door (Right)
651TB	Trailing Edge Skin Panel (Right)

D. Procedure

S 484-073

(1) Do these steps to install the alignment tool in the adapter plate (3):
   (a) Remove the Shutoff Valve Actuator (AMM 28-22-11/401).
   (b) Remove the top two index screws from the index plate.
   (c) Loosen the bottom index screw, but do not remove it.
   (d) Install the alignment tool (Fig. 402):
   (e) Put the alignment tool in its position with the two guide pins in the holes left by the two index screws that you removed (the scale should be on the top of the tool).
   (f) Make sure the spline on the tool engages with the spline on the shaft.

S 824-074

(2) Do these steps to align the adapter shaft (Procedure 1, optional to Procedure 2):

NOTE: This procedure finds the point where the internal valve butterfly engages the valve seal. The torque required to turn the shaft increases as the butterfly engages the seal, then decreases again as the butterfly leaves the other side of the seal. Once the edge of the seal is found, the valve shaft will then be turned to center the butterfly on the seal.

   (a) Put the tool handle in the extreme counterclockwise position.
   (b) Turn the handle slowly in the clockwise direction at a constant rate while you note the changes in the torque necessary to turn the handle.
   (c) Do the previous steps as many times as necessary to find the point in the rotation where the torque necessary to turn the handle increases significantly.
   (d) If you cannot find the position in the rotation where the torque increases significantly, then use Procedure 2 below.

BOEING PROPRIETARY - Copyright (C) - Unpublished Work - See title page for details.

(e) Put the shaft in the extreme counterclockwise position again.
(f) Slowly and smoothly turn the handle of the tool clockwise until a distinct increase in torque is found and immediately stop turning the handle.
(g) Read the scale on the tool.

NOTE: This is the point where the valve butterfly starts to engage the edge of the seal.

(h) Turn the handle 13 degrees more in the clockwise direction (the scale on the tool is calibrated in degrees).

NOTE: The valve butterfly is now centered on the valve seal.

If you turn the handle past the target value, do not turn the handle back in the counterclockwise direction again. You must start the procedure again with the handle in the extreme counterclockwise position.

S 824-075
(3) Do these steps to align the adapter shaft (Procedure 2, optional to procedure 1):

NOTE: A torque meter is necessary to do this procedure.

(a) Put the tool handle in the extreme counterclockwise position.
(b) Slowly and smoothly turn the tool handle to the extreme clockwise position while you monitor the torque that you apply to the handle.
(c) Write down the maximum torque that you apply to the tool while you turn it from the extreme counterclockwise position to the extreme clockwise position.
(d) Turn the tool back to the extreme counterclockwise position.
(e) Turn the shaft clockwise again at approximately the same rate that you used before.
(f) Stop at the position where the torque increases to approximately two-thirds of the maximum torque that you wrote down before.
(g) Read the scale on the tool at this position.

NOTE: This is the position where valve butterfly starts to engage the edge of the seal.

BOEING PROPRIETARY - Copyright (C) - Unpublished Work - See title page for details.

(h) Turn the handle 13 more degrees in the clockwise direction past the reading from the previous step.

NOTE: The butterfly valve is now centered on the valve seal.

If you turn the valve past the target value, do not turn it back in the counterclockwise direction. You must start again with the tool handle in the extreme counterclockwise position.

S 034-076

(4) Tighten the lockscrew on the tool to keep the adapter shaft in its position.

S 824-077

(5) Turn the index plate until the actuator mounting holes in the index plate are aligned with the two upper holes for the actuator mounting screws.

S 824-078

(6) Insert the two align screws into the holes for the actuator mounting screws to hold the index plate in alignment with the mounting plate (this is a final adjustment of the position of the index plate).

S 434-079

(7) Tighten the bottom index screw to a torque of 21-23 pound-inches.

S 084-080

(8) Carefully remove the align screws.

S 084-082

(9) Carefully remove the alignment tool from the index plate.

S 434-081

(10) Install the top two index plate mounting screws (9) in the index plate (8) and tighten them to a torque of 21-23 pound-inches.

BOEING PROPRIETARY - Copyright (C) - Unpublished Work - See title page for details.

S 424-117

(11) Install the Actuator (AMM 28-22-11/401).

BOEING PROPRIETARY - Copyright (C) - Unpublished Work - See title page for details.

ENGINE FUEL CROSSFEED VALVE AND ADAPTER/SHAFT - REMOVAL/INSTALLATION

1. General
   A. The engine fuel crossfeed valve is installed on the rear spar of the auxiliary fuel tank.
   B. The engine fuel crossfeed valve has an actuator, an adapter shaft and a valve body.
   C. This procedure contains five tasks. The first task removes the valve body of the engine fuel crossfeed valve. The second task installs the valve body of the engine fuel crossfeed valve. The third task removes the adapter shaft of the engine fuel crossfeed valve. The fourth task installs the adapter shaft of the engine fuel crossfeed valve. The fifth task aligns the adapter shaft of the engine fuel crossfeed valve.
   D. The procedure to remove and install the actuator is in AMM 28-22-12/401.

TASK 28-22-02-004-153

2. Remove the Valve Body of the Engine Fuel Crossfeed Valve
   A. References
      (1) AMM 28-11-00/201, Fuel Tanks
      (2) AMM 28-11-02/401, Auxiliary Tank Access Doors
      (3) AMM 28-26-00/201, Defueling
      (4) AMM 32-00-15/201, Landing Gear Door Locks
      (5) AMM 32-00-20/201, Landing Gear Downlocks
   B. Access
      (1) Location Zones
          133 Wing Center Section (Left)
          134 Wing Center Section (Right)
          136 Environmental Control System Bay (Right)
          531 Center Auxiliary Tank (Left)

      (2) Access Panels
          136KZ Auxiliary Tank Access Door (Center)
          531BB Auxiliary Tank Access Door (Left)

   C. Remove the Valve Body

      S 214-001
      (1) Make sure the downlocks are installed on the nose and main landing gear (AMM 32-00-20/201).

      S 494-003

      WARNING: USE THE PROCEDURE IN AMM 32-00-15/201 TO INSTALL THE DOOR LOCKS. THE DOORS OPEN AND CLOSE QUICKLY AND CAN CAUSE INJURY TO PERSONS OR DAMAGE TO EQUIPMENT.

      (2) Open the doors for the landing gear and install the door locks (AMM 32-00-15/201).

BOEING PROPRIETARY - Copyright (C) - Unpublished Work - See title page for details.

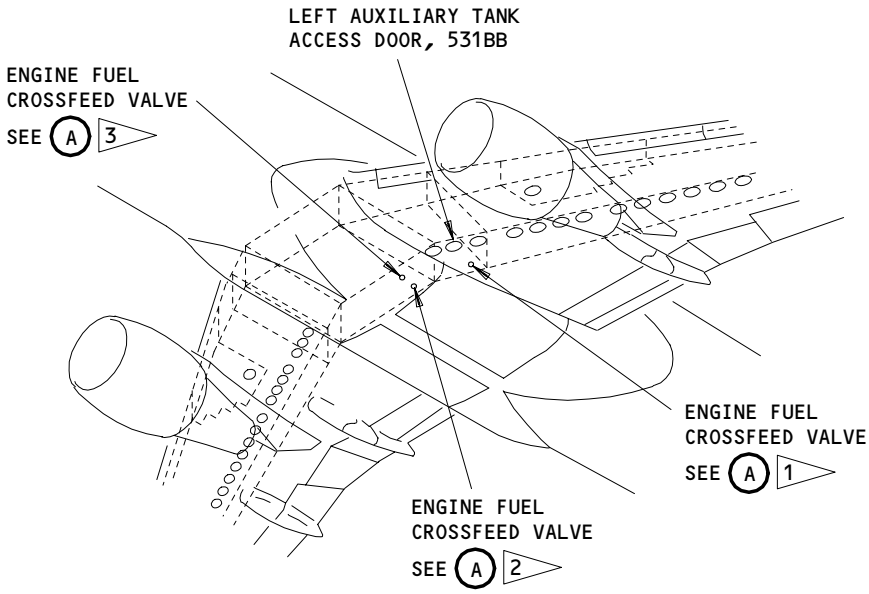

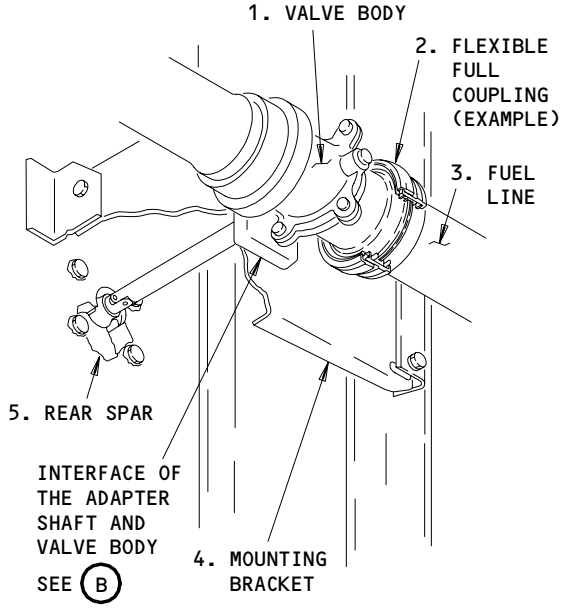

ENGINE FUEL CROSSFEED VALVE

A

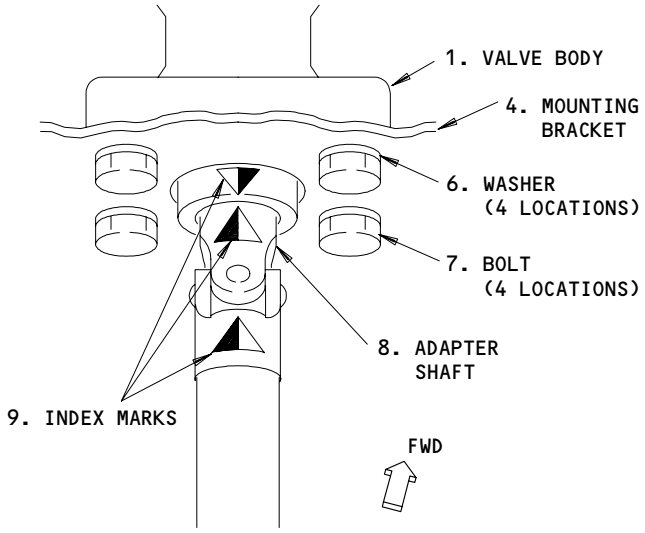

INTERFACE OF THE ADAPTER
SHAFT AND VALVE BODY

B

1 SAS 150-154 WITHOUT SB 28-34;
MTH 275,276 WITHOUT SB 28-34

2 SAS 150-154 WITH SB 28-34, AND
SAS 050-149,155-999;
MTH 275,276 WITH SB 28-34, AND
MTH 277-999

3 SAS 050,051,150-167 WITH SB 28-34, AND
SAS 052-149,168-999;
MTH 275-280 WITH SB 28-34, AND
MTH 281-999

Engine Fuel Crossfeed Valve Installation
Figure 401

BOEING PROPRIETARY - Copyright (C) - Unpublished Work - See title page for details.

S 214-004
(3) Make sure the manual override handle (5) on the actuator (1) is in the CLOSED position (Fig. 402).

S 654-006
(4) Defuel all the fuel tanks (AMM 28-26-00/201).

S 944-007

WARNING: DO THE PURGING AND FUEL TANK ENTRY PROCEDURE (AMM 28-11-00/201). FAILURE TO OBEY THE PROCEDURE COULD CAUSE INJURY TO PERSONS OR DAMAGE TO EQUIPMENT.

(5) Do the Purging and Fuel Tank Entry procedure (AMM 28-11-00/201).

S 014-038
(6) SAS 150-154 PRE-SB 28-34;
MTH 275, 276 PRE-SB 28-34;
Remove the left auxiliary tank access door, 531BB (AMM 28-11-02/401).

S 014-049
(7) SAS 150-154 POST-SB 28-34;
SAS 050-149, 155-999;
MTH 275, 276 POST-SB 28-34;
MTH 277-999;
Remove the center auxiliary tank access door, 136KZ (AMM 28-11-02/401).

S 014-009
(8) Go into the auxiliary fuel tank to get access to the valve body (1) (Fig. 401).

S 034-154
(9) Remove the flexible full couplings (2) between the valve body (1) and the fuel lines (3) (View A, Fig. 401).

S 034-155
(10) Remove the bolts (7) and washers (6) that attach the valve body (1) to the mounting bracket (4) (View B, Fig. 401).

S 024-156
(11) Disengage the valve body (1) from the adapter shaft (8).

S 024-010
(12) Remove the valve body (1).

BOEING PROPRIETARY - Copyright (C) - Unpublished Work - See title page for details.

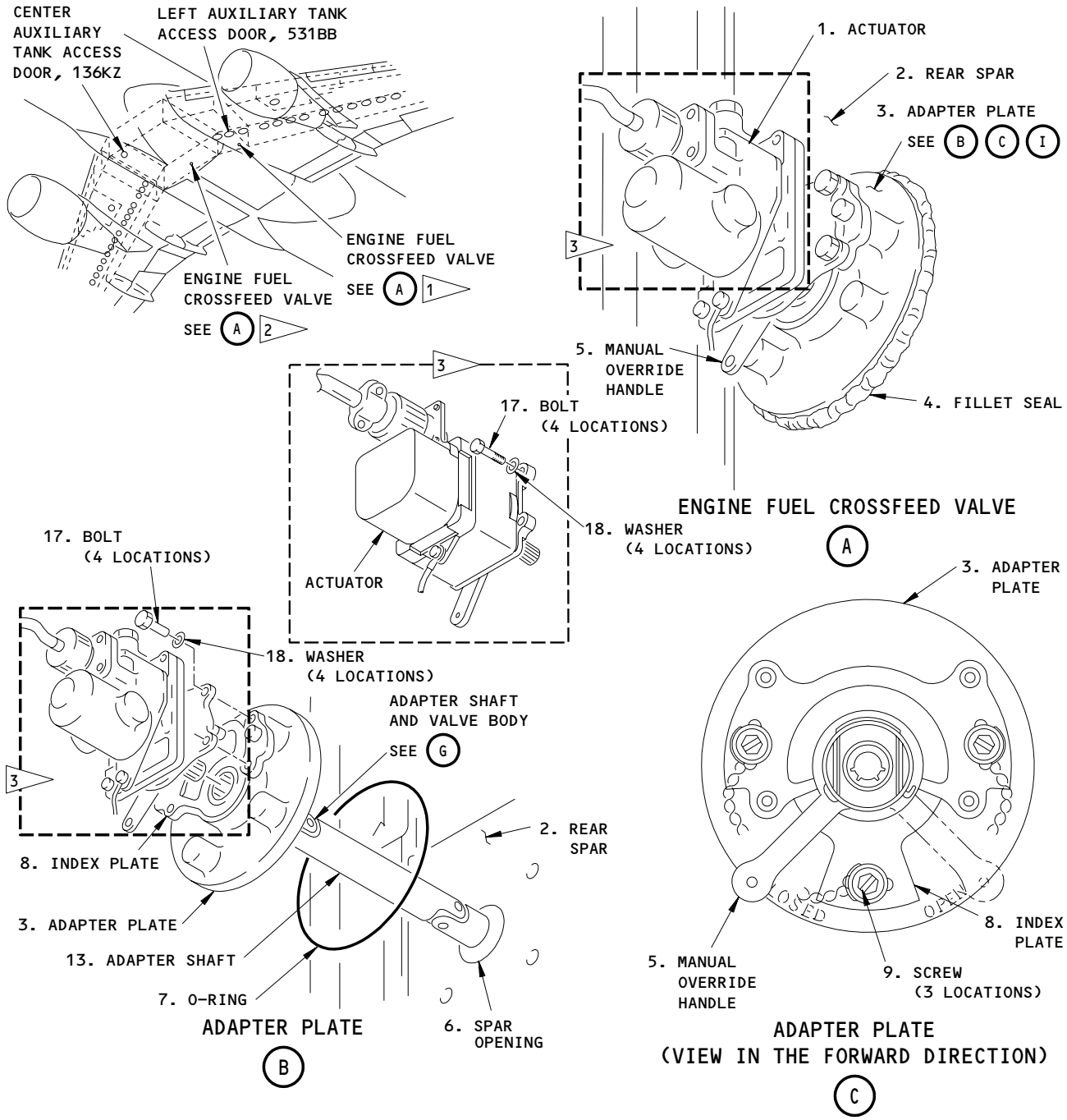

1 AIRPLANES WITH ENGINE FUEL CROSSFEED VALVE LOCATED IN LEFT AUXILIARY TANK (PRE-SB 28-34)

2 AIRPLANES WITH ENGINE FUEL CROSSFEED VALVE LOCATED IN CENTER AUXILIARY TANK (PRE-SB 28-34); THE ENGINE FUEL CROSSFEED VALVE IS INSTALLED 90° COUNTERCLOCKWISE.

3 ALTERNATE

Engine Fuel Crossfeed Valve Adapter Shaft Installation
Figure 402 (Sheet 1)

BOEING PROPRIETARY - Copyright (C) - Unpublished Work - See title page for details.

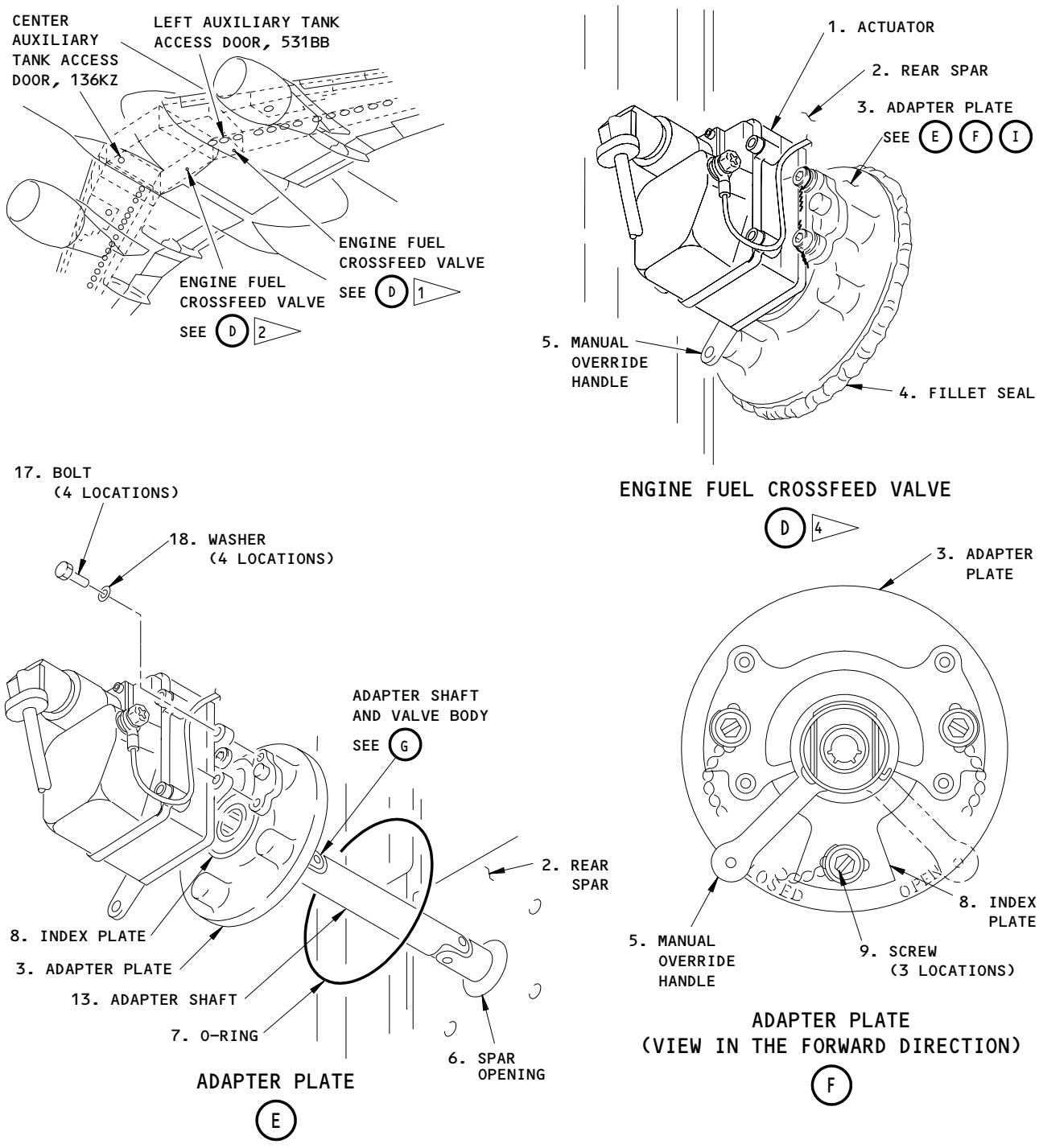

Engine Fuel Crossfeed Valve Adapter Shaft Installation
Figure 402 (Sheet 2)

BOEING PROPRIETARY - Copyright (C) - Unpublished Work - See title page for details.

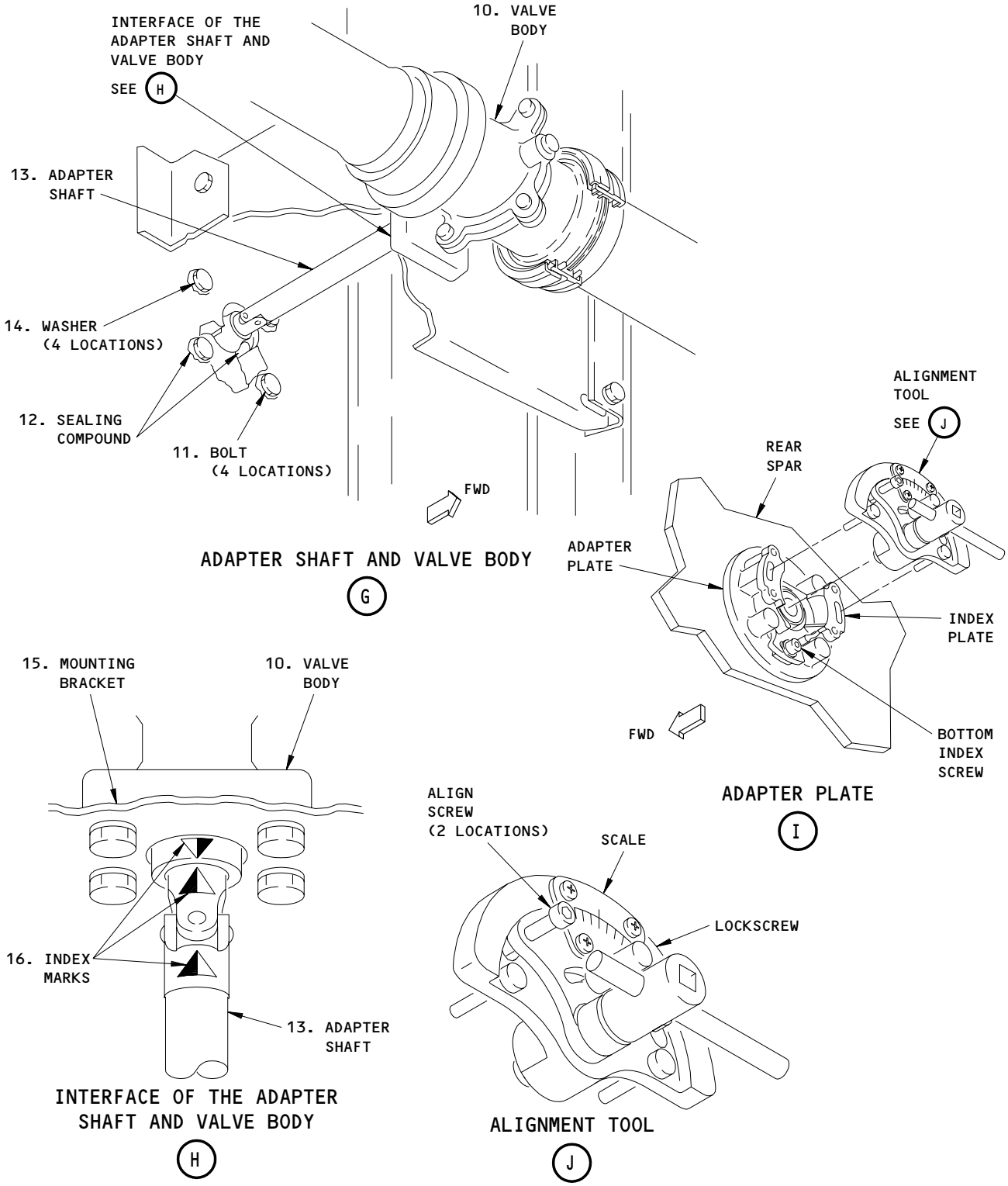

Engine Fuel Crossfeed Valve Adapter Shaft Installation
Figure 402 (Sheet 3)

BOEING PROPRIETARY - Copyright (C) - Unpublished Work - See title page for details.

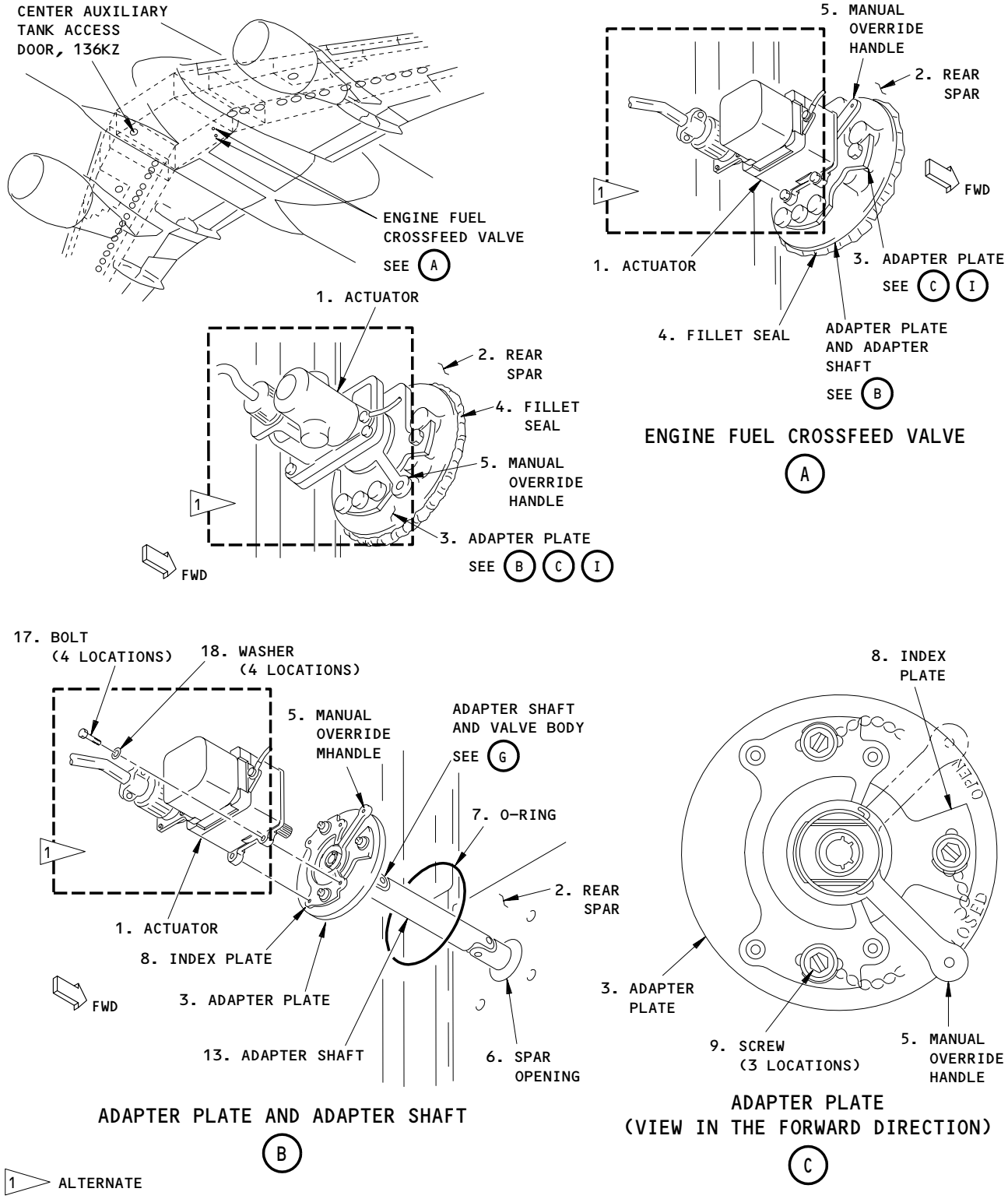

Engine Fuel Crossfeed Valve Adapter Shaft Installation
Figure 402A (Sheet 1)

BOEING PROPRIETARY - Copyright (C) - Unpublished Work - See title page for details.

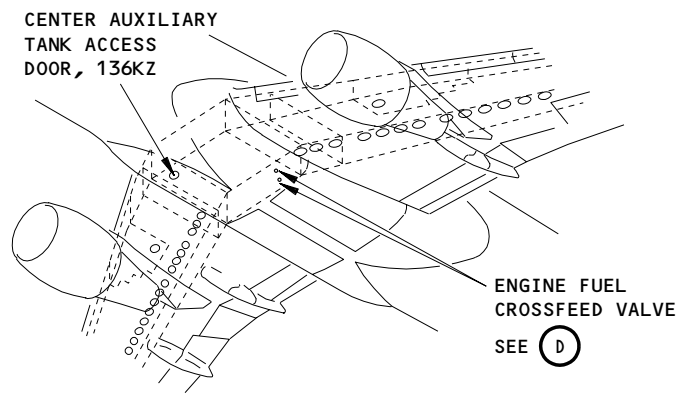

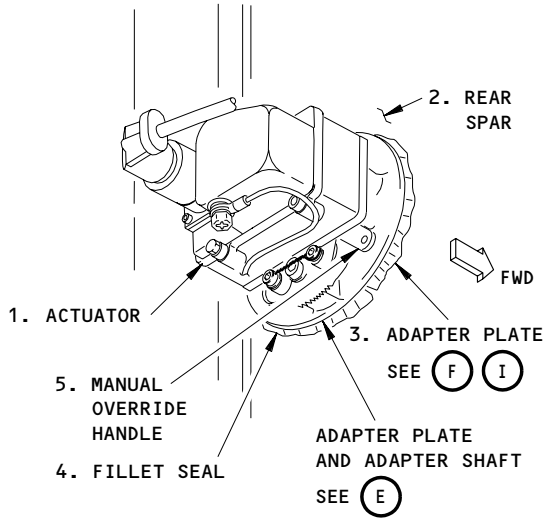

ENGINE FUEL CROSSFEED VALVE

D 2

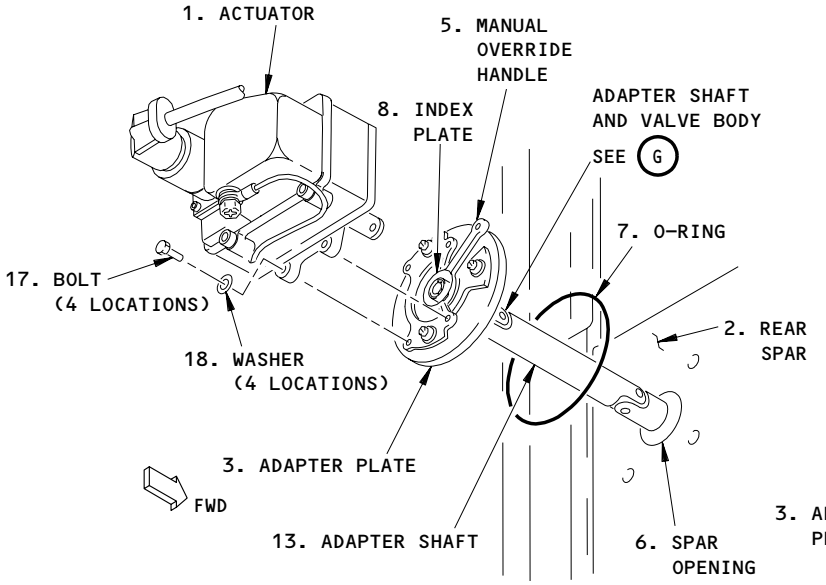

ADAPTER PLATE AND ADAPTER SHAFT

E

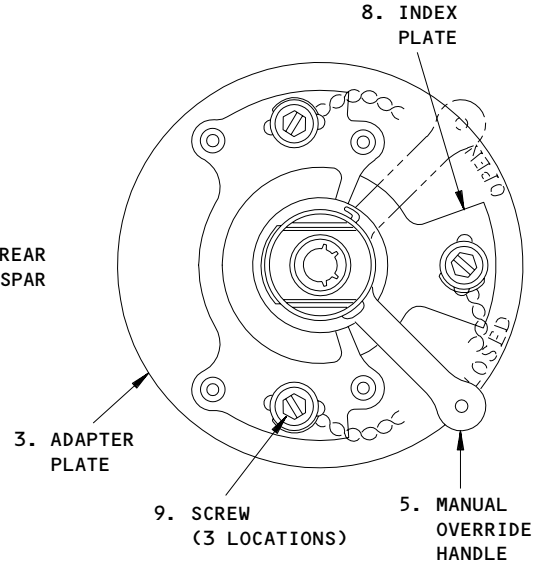

ADAPTER PLATE
(VIEW IN THE FORWARD DIRECTION)

F

2 RECOMMENDED

Engine Fuel Crossfeed Valve Adapter Shaft Installation
Figure 402A (Sheet 2)

BOEING PROPRIETARY - Copyright (C) - Unpublished Work - See title page for details.

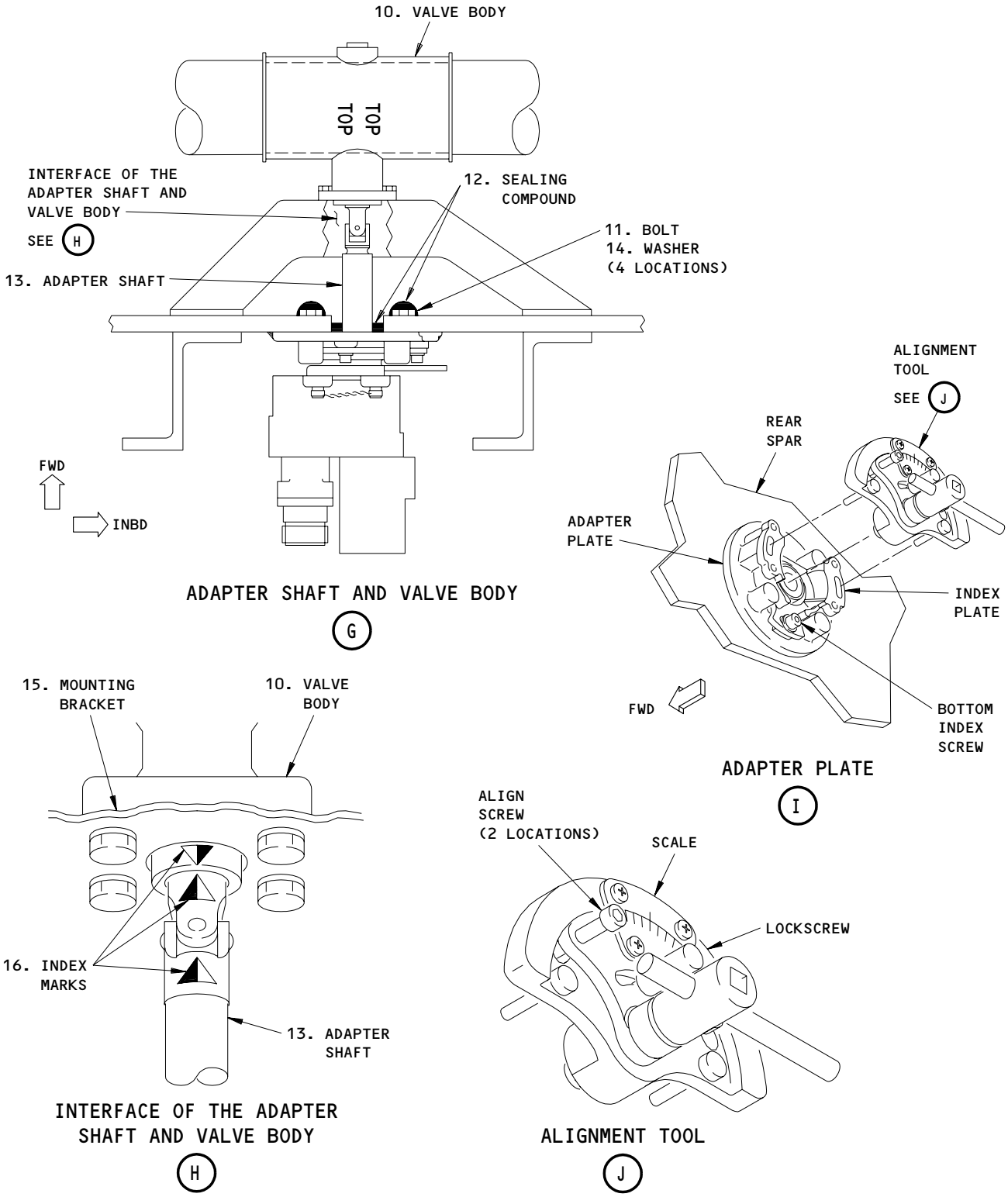

Engine Fuel Crossfeed Valve Adapter Shaft Installation
Figure 402A (Sheet 3)

BOEING PROPRIETARY - Copyright (C) - Unpublished Work - See title page for details.

TASK 28-22-02-404-059

3. Install the Valve Body of the Engine Fuel Crossfeed Valve

A. References
(1) AMM 12-11-01/301, Fuel Tank Pressure Fueling
(2) AMM 20-10-21/601, Electrical Bonding
(3) AMM 24-22-00/201, Electrical Power Control
(4) AMM 28-11-00/201, Fuel Tanks
(5) AMM 28-11-02/401, Auxiliary Tank Access Doors
(6) AMM 32-00-15/201, Landing Gear Door Locks

B. Access
(1) Location Zones
133 Wing Center Section (Left)
134 Wing Center Section (Right)
136 Environmental Control System Bay (Right)
531 Center Auxiliary Tank (Left)

(2) Access Panels
136KZ Auxiliary Tank Access Door (Center)
531BB Auxiliary Tank Access Door (Left)

C. Install the Valve Body

S 214-060
(1) Make sure the manual override handle (5) on the actuator (1) is in the CLOSED position (Fig. 402).

S 944-011

WARNING: DO THE FUEL TANK ENTRY PROCEDURE (AMM 28-11-00/201). FAILURE TO FOLLOW THE FUEL TANK ENTRY PROCEDURE COULD CAUSE INJURY TO PERSONS OR DAMAGE TO EQUIPMENT.

(2) Do the fuel tank entry procedure (AMM 28-11-00/201).

BOEING PROPRIETARY - Copyright (C) - Unpublished Work - See title page for details.

S 424-061
(3) Engage the valve body (1) on the adapter shaft (8) (View B, Fig. 401).

S 824-013
(4) Make sure the index marks (9) on the adapter shaft (8) and valve body (1) align.

S 434-062
(5) Install the bolts (7) and washers (6) to attach the valve body (1) to the mounting bracket (4).

S 824-063
(6) Align the fuel lines (3) and valve body (1) (View A, Fig. 401).

S 434-014
(7) Install the flexible full couplings (2) between the fuel lines (3) and valve body (1) (View A, Fig. 401).

S 224-157
(8) Make sure the bonding resistance between the valve body (1) and the airplane structure is not more than 0.005 ohms (AMM 20-10-21/601).

S 164-015

CAUTION: MAKE SURE YOU REMOVE ALL UNWANTED PARTICLES IN THE FUEL TANK. UNWANTED PARTICLES CAN BLOCK THE PUMPS AND PREVENT THE SCAVENGE OF FUEL AND WATER.

(9) Remove all unwanted particles from the fuel tank.

S 414-067
(10) SAS 150-154 PRE-SB 28-34;
MTH 275, 276 PRE-SB 28-34;
Install the left auxiliary tank access door, 531BB (AMM 28-11-02/401).

BOEING PROPRIETARY - Copyright (C) - Unpublished Work - See title page for details.

S 414-078
(11) SAS 150-154 POST-SB 28-34;
SAS 050-149, 155-999;
MTH 275, 276 POST-SB 28-34;
MTH 277-999;
Install the center auxiliary tank access door, 136KZ (AMM 28-11-02/401).

S 864-088
(12) Supply electrical power (AMM 24-22-00/201).

S 714-016
(13) Do the steps that follow to do a test of the engine fuel crossfeed valve:
(a) Push the applicable FUEL CROSSFEED or FWD or AFT FUEL XFEED switch-light of the fuel management panel on the overhead panel, P5, to the open position.
(b) Make sure the manual override handle (5) on the actuator (1) moves to the OPEN position (Fig. 402).
(c) Push the applicable FUEL CROSSFEED or FWD or AFT FUEL XFEED switch-light on the P5 panel to the off position.
(d) Make sure the manual override handle (5) on the actuator (1) moves to the CLOSED position.

S 094-017

WARNING: USE THE PROCEDURE IN AMM 32-00-15/201 TO REMOVE THE DOOR LOCKS. THE DOORS OPEN AND CLOSE QUICKLY AND CAN CAUSE INJURY TO PERSONS OR DAMAGE TO EQUIPMENT.

(14) Remove the door locks from the landing gear doors and close the doors (AMM 32-00-15/201).

S 654-018
(15) Refuel the fuel tanks if no more work is necessary (AMM 12-11-01/301).

BOEING PROPRIETARY - Copyright (C) - Unpublished Work - See title page for details.

S 214-588

(16) Make sure there are no fuel leaks.

S 864-089

(17) Remove electrical power if it is not necessary (AMM 24-22-00/201).

TASK 28-22-02-004-020

4. Remove the Adapter Shaft of the Engine Fuel Crossfeed Valve (Fig. 402 or 402A)

A. General

(1) The adapter shaft of the engine fuel crossfeed valve has an index plate (8) and an adapter shaft (13). The adapter shaft (13) has an adapter plate (3) and a shaft.

B. References

(1) AMM 28-11-00/201, Fuel Tanks
(2) AMM 28-11-02/401, Auxiliary Tank Access Doors
(3) AMM 28-22-12/401, Engine Fuel Crossfeed Valve
(4) AMM 28-26-00/201, Defueling
(5) AMM 32-00-15/201, Landing Gear Door Locks
(6) AMM 32-00-20/201, Landing Gear Downlocks

C. Access

(1) Location Zones

133 Wing Center Section (Left)
134 Wing Center Section (Right)
136 Environmental Control System Bay (Right)
531 Center Auxiliary Tank (Left)

(2) Access Panels

136KZ Auxiliary Tank Access Door (Center)
531BB Auxiliary Tank Access Door (Left)

D. Remove the Adapter Shaft

S 034-090

(1) Do the Remove the Actuator of the Engine Fuel Crossfeed Valve procedure (AMM 28-22-12/401).

S 214-002

(2) Make sure the downlocks are installed on the nose and main landing gear (AMM 32-00-20/201).

S 494-005

WARNING: USE THE PROCEDURE IN AMM 32-00-15/201 TO INSTALL THE DOOR LOCKS. THE DOORS OPEN AND CLOSE QUICKLY AND CAN CAUSE INJURY TO PERSONS OR DAMAGE TO EQUIPMENT.

(3) Open the doors for the landing gear and install the door locks (AMM 32-00-15/201).

BOEING PROPRIETARY - Copyright (C) - Unpublished Work - See title page for details.

S 654-158
(4) Defuel all the fuel tanks (AMM 28-26-00/201).

S 944-008

WARNING: DO THE PURGING AND FUEL TANK ENTRY PROCEDURE (AMM 28-11-00/201). FAILURE TO OBEY THE PROCEDURE COULD CAUSE INJURY TO PERSONS OR DAMAGE TO EQUIPMENT.

(5) Do the Purging and Fuel Tank Entry procedure (AMM 28-11-00/201).

S 014-094
(6) SAS 150-154 PRE-SB 28-34;
MTH 275, 276 PRE-SB 28-34;
Remove the left auxiliary tank access door, 531BB (AMM 28-11-02/401).

S 014-104
(7) SAS 150-154 POST-SB 28-34;
SAS 050-149, 155-999;
MTH 275, 276 POST-SB 28-34;
MTH 277-999;
Remove the center auxiliary tank access door, 136KZ (AMM 28-11-02/401).

S 014-114
(8) Go into the auxiliary fuel tank to get access to the adapter shaft (13) (AMM 28-11-00/201).

S 034-115
(9) Remove the bolts (11) and washers (14) that attach the adapter plate (3) of the adapter shaft (13) to the rear spar (2) (View G).

S 024-116
(10) Disengage the adapter shaft (13) from valve body (10).

S 024-021
(11) Remove the adapter shaft (13) (with the index plate (8) attached) through the spar opening (6) on the rear spar (2).

TASK 28-22-02-404-023
5. Install the Adapter Shaft of the Engine Fuel Crossfeed Valve
(Fig. 402 or 402A)
A. General
(1) The adapter shaft of the engine fuel crossfeed valve has an index plate (8) and an adapter shaft (13). The adapter shaft (13) has an adapter plate (3) and a shaft.
B. Consumable Materials
(1) G00034 Cotton Wiper, Process Cleaning Absorbent Wiper (cheesecloth, gauze) BMS15-5

BOEING PROPRIETARY - Copyright (C) - Unpublished Work - See title page for details.

(2) G50021 - Scotch-Brite 96W pad
(3) D00504 - Petrolatum grease
(4) C00064 Coating - Chemical Conversion Coating for Aluminum or Aluminum Alloys, MIL-C-5541 (MIL-C-81706) - Alodine 600
(5) C00307 BMS 10-20, Type II Class A - Finish, Corrosion Resistant
(6) A00247 Chromate Type Sealant - BMS 5-95, Class B
(7) A00767 Sealant - Integral Fuel Tank BMS 5-45
(8) B01008 Solvent - Series 88
(9) B01012 Solvent - Series 92

C. References
(1) AMM 12-11-01/301, Fuel Tank Pressure Fueling
(2) AMM 20-10-23/401, Lockwires
(3) AMM 20-30-88/201, Airplane Structure Cleaning Solvents (Series 88)
(4) AMM 20-30-92/201, Airplane Structure Cleaning Solvents (Series 92)
(5) AMM 28-11-00/201, Fuel Tanks
(6) AMM 28-11-02/401, Auxiliary Tank Access Doors
(7) AMM 28-22-12/401, Engine Fuel Crossfeed Valve
(8) AMM 32-00-15/201, Landing Gear Door Locks
(9) SWPM 20-20-00, Electrical Bonding and Grounds

D. Access
(1) Location Zones
133 Wing Center Section (Left)
134 Wing Center Section (Right)
136 Environmental Control System Bay (Right)
531 Center Auxiliary Tank (Left)

(2) Access Panels
136KZ Auxiliary Tank Access Door (Center)
531BB Auxiliary Tank Access Door (Left)

E. AIRPLANES WITHOUT ACTUATOR MA20A2027 OR MA30A1001;
Install the Adapter Shaft of the Engine Fuel Crossfeed Valve

S 424-117
(1) Put the adapter shaft (13) through the spar opening (6) on the rear spar (2).

S 214-024
(2) Make sure the seal surface on the rear spar is clean.

S 434-118
(3) Install a new O-ring (7) on the adapter plate (3).

S 944-012

WARNING: DO THE FUEL TANK ENTRY PROCEDURE (AMM 28-11-00/201). FAILURE TO FOLLOW THE FUEL TANK ENTRY PROCEDURE COULD CAUSE INJURY TO PERSONS OR DAMAGE TO EQUIPMENT.

(4) Do the fuel tank entry procedure (AMM 28-11-00/201).

BOEING PROPRIETARY - Copyright (C) - Unpublished Work - See title page for details.

S 424-119
(5) Engage the adapter shaft (13) and the valve body (10) (View H).

S 434-025
(6) Put the adapter plate (3) in its position.

S 434-120
(7) Install the bolts (11) and washers (14) to attach the adapter plate (3) (View G).

S 394-121
(8) Apply the sealant (BMS 5-45 Class B) (12) around the bolts (11) and the hole in the center on the rear spar (AMM 51-31-00/001, AMM 51-31-01/201).

S 214-026
(9) Make sure the sealant (BMS 5-45 Class B) does not cause the engine fuel crossfeed valve to operate incorrectly.

S 824-516
(10) Do this task: Adapter Shaft Alignment.

S 434-152
(11) Install the lockwire on the screws (9) (AMM 20-10-23/401).

S 224-124
(12) Make sure the bonding resistance between the adapter plate (3) and the airplane structure is 0.005 ohms or less (SWPM 20-20-00).

S 394-125
(13) Apply a fillet seal (4) between the adapter plate (3) and the rear spar with the chromate type sealant (AMM 51-31-00/001, AMM 51-31-01/201).

S 434-126
(14) Do the Install the Actuator of the Engine Fuel Crossfeed Valve procedure (AMM 28-22-12/401).

BOEING PROPRIETARY - Copyright (C) - Unpublished Work - See title page for details.

F. AIRPLANES WITH ACTUATOR MA20A2027 OR MA30A1001;
Install the Adapter Shaft of the Engine Fuel Crossfeed Valve

S 124-556

(1) Remove the old sealant and clean the rear spar, adapter shaft (13), index plate (8), and fasteners (if reused).
   (a) Use the sealant removal tool and sealant removal tool handle (or equivalent) to remove the old sealant from the rear spar (2).
   (b) If new parts are to be installed, use an abrasive pad to remove the anodized finish from the faying surfaces of the adapter plate (3) of the adapter shaft (13) and index plate (8) (SWPM 20-20-00).

WARNING: DO NOT GET SOLVENTS IN YOUR MOUTH, YOUR EYES, OR ON YOUR SKIN. DO NOT BREATHE THE FUMES FROM SOLVENTS. SOLVENTS ARE DANGEROUS MATERIALS. SOLVENTS CAN BE FLAMMABLE. OBEY THE MATERIAL SAFETY DATA SHEETS (MSDS) FOR SOLVENTS. OBEY LOCAL REGULATIONS FOR THE CORRECT PROCEDURES TO USE OR DISCARD SOLVENTS. SOLVENTS CAN CAUSE INJURIES TO PERSONNEL AND DAMAGE TO EQUIPMENT.

   (c) To remove the remaining sealant, grease, oil, dirt, and other contamination from the components, use one of these items soaked with Series 92 solvent (AMM 20-30-92/201).
      1) soft bristle brush
      2) cotton wiper
      3) Scotch-Brite 96W pad

S 114-557

(2) Do these steps to prepare the adapter plate (3) of the adapter shaft (13) and the rear spar for a fillet sealed electrical faying surface bond (SWPM 20-20-00):

WARNING: DO NOT GET SOLVENTS IN YOUR MOUTH, YOUR EYES, OR ON YOUR SKIN. DO NOT BREATHE THE FUMES FROM SOLVENTS. SOLVENTS ARE DANGEROUS MATERIALS. SOLVENTS CAN BE FLAMMABLE. OBEY THE MATERIAL SAFETY DATA SHEETS (MSDS) FOR SOLVENTS. OBEY LOCAL REGULATIONS FOR THE CORRECT PROCEDURES TO USE OR DISCARD SOLVENTS. SOLVENTS CAN CAUSE INJURIES TO PERSONNEL AND DAMAGE TO EQUIPMENT.

   (a) Final clean the contact surfaces of the adapter plate (3) and the rear spar (2) with a cotton wiper soaked with Series 88 solvent (AMM 20-30-88/201).
   (b) Rub dry with a clean, dry cotton wiper.
   (c) Continue to clean and dry the surface until the dry cotton wiper stays clean.

BOEING PROPRIETARY - Copyright (C) - Unpublished Work - See title page for details.

S 434-558

(3) While outside of the airplane fuel tank, do these steps:
   (a) Put a thin layer of petrolatum grease on the new o-ring (7).
   (b) Put the o-ring (7) in the o-ring groove of the adapter plate (3).
   (c) Put the shaft of the adapter shaft (13) through the spar opening (6).
   (d) Make sure the shoulder of the adapter shaft (13) does not bind in the opening of the rear spar (2).

S 864-559

WARNING: OBEY THE FUEL TANK ENTRY PRECAUTIONS. FAILURE TO OBEY THE FUEL TANK ENTRY PRECAUTIONS COULD CAUSE INJURY TO PERSONS OR DAMAGE TO EQUIPMENT.

(4) Obey the fuel tank entry precautions (AMM 28-11-00/201).

S 014-560

WARNING: DO THE PURGING AND FUEL TANK ENTRY PROCEDURE. FAILURE TO FOLLOW THE PURGING AND FUEL TANK ENTRY PROCEDURE COULD CAUSE INJURIES TO PERSONS OR DAMAGE TO EQUIPMENT.

(5) Go into the the fuel tank to the crossfeed valve location (AMM 28-11-00/201).

S 424-561

(6) Do these steps to install the adapter shaft (13):
   (a) Make sure that the index marks (16) on the valve body (10) and adapter shaft (13) are aligned (Fig. 402, View H).

   NOTE: A small misalignment of the index marks is satisfactory.

   (b) Engage the shaft of the adapter shaft (13) with the valve body (10).
   (c) Apply sealant to the shank and the threads of the four bolts (11).

   NOTE: CDCCL - Refer to the task: Airworthiness Limitation Precautions (AMM 28-00-00/201), for important information on Critical Design Configuration Control Limitations (CDCCLs).

   NOTE: This is applicable to Airworthiness Limitation 28-AWL-23.

   1) Use BMS5-45 Class B sealant for the wet installation of the bolts (11).

BOEING PROPRIETARY - Copyright (C) - Unpublished Work - See title page for details.

2) Make sure the sealant applied to the fasteners is approximately 0.060 in. (1.524 mm) thick.

(d) Install the bolts (11) and washers (14) to attach the adapter plate (3) of the adapter shaft (13) to the rear spar (2).

(e) Make sure the gap between the adapter shaft (13) and the valve body spline is 0.20 +/- 0.20 inch (5.1 =/- 5.1 mm).

NOTE: If you can not get the correct gap, loosen the support bracket for the valve body (10) and adjust its position to get the correct gap.

S 764-562

(7) On the outside of the fuel tank, measure the bonding resistance between one of the raised serrated surfaces of the adapter plate (3) (bare metal surface) and the rear spar (2).

(a) Make sure the resistance is 0.0005 ohm (0.5 milliohm) or less.

NOTE: CDCCL - Refer to the task: Airworthiness Limitation Precautions (AMM 28-00-00/201), for important information on Critical Design Configuration Control Limitations (CDCCLs).

NOTE: This is applicable to Airworthiness Limitation 28-AWL-23.

S 424-563

(8) On the inside of the tank, apply a fillet seal of BMS5-45 Class B sealant to these components (AMM 51-31-01/201):

NOTE: CDCCL - Refer to the task: Airworthiness Limitation Precautions (AMM 28-00-00/201), for important information on Critical Design Configuration Control Limitations (CDCCLs).

NOTE: This is applicable to Airworthiness Limitation 28-AWL-23.

(a) The four bolts (11).

(b) The periphery of the rear spar penetration and the stationary part of the adapter shaft (13).

NOTE: Make sure the sealant does not touch any part of the adapter shaft (13) that rotates.

BOEING PROPRIETARY - Copyright (C) - Unpublished Work - See title page for details.

S 424-564

(9) On the outside of the fuel tank, apply a fillet seal of BMS5-45 Class B sealant around the periphery of the adapter plate (3) (AMM 51-31-01/201).

NOTE: CDCCL - Refer to the task: Airworthiness Limitation Precautions (AMM 28-00-00/201), for important information on Critical Design Configuration Control Limitations (CDCCLs).

NOTE: This is applicable to Airworthiness Limitation 28-AWL-23.

S 824-571

(10) Do this task: Adapter Shaft Alignment.

G. Install the Index Plate

S 824-572

(1) Do this procedure after you have correctly aligned and marked the alignment position of the index plate and adapter plate (3) per this task: Adapter Shaft Alignment.

S 024-573

(2) Remove the screws (9) and washers to remove the index plate (8) from the adapter plate (3).

S 424-574

(3) Do these steps to prepare the index plate (8) and the adapter plate (3) of the adapter shaft (13) for a sealed electrical faying surface bond (SWPM 20-20-00).

(a) Protect the alignment reference mark when you clean the index plate (8) and the adapter plate (3) for the electrical bond.

WARNING: DO NOT GET SOLVENTS IN YOUR MOUTH, YOUR EYES, OR ON YOUR SKIN. DO NOT BREATHE THE FUMES FROM SOLVENTS. SOLVENTS ARE DANGEROUS MATERIALS. SOLVENTS CAN BE FLAMMABLE. OBEY THE MATERIAL SAFETY DATA SHEETS (MSDS) FOR SOLVENTS. OBEY LOCAL REGULATIONS FOR THE CORRECT PROCEDURES TO USE OR DISCARD SOLVENTS. SOLVENTS CAN CAUSE INJURIES TO PERSONNEL AND DAMAGE TO EQUIPMENT.

(b) Final clean the contact surfaces with a cotton wiper soaked with Series 88 solvent (AMM 20-30-88/201).

(c) Rub dry with a clean, dry cotton wiper.

(d) Continue to clean and dry the surface until the dry cotton wiper stays clean.

BOEING PROPRIETARY - Copyright (C) - Unpublished Work - See title page for details.

(e) Apply a thin continuous layer of sealant to the serrated surface of the index plate (8) (three locations).

NOTE: CDCCL - Refer to the task: Airworthiness Limitation Precautions (AMM 28-00-00/201), for important information on Critical Design Configuration Control Limitations (CDCCLs).

NOTE: This is applicable to Airworthiness Limitation 28-AWL-23.

1) Use Pro Seal 890A or PR-1440A sealant for the faying surface seal.
2) Make sure the sealant layer is approximately 0.005 inch (0.127 mm) thick.

(f) Apply sealant to the shank and the threads of the screws (9).

NOTE: CDCCL - Refer to the task: Airworthiness Limitation Precautions (AMM 28-00-00/201), for important information on Critical Design Configuration Control Limitations (CDCCLs).

NOTE: This is applicable to Airworthiness Limitation 28-AWL-23.

1) Use Pro Seal 890A or PR-1440A sealant for the wet installation of the screws (9).
2) Make sure the sealant applied to the fasteners is approximately 0.060 inch (1.52 mm) thick.

S 424-575

(4) Do these steps to install the index plate (8).
(a) Align the index plate (8) and the adapter plate (3) with the alignment reference mark that you made during the adapter shaft alignment procedure.
(b) Install the two screws (9) and washers in the two index mounting hole positions that are 180 degrees opposite to each other.
(c) Install the screw (9) and washer in the remaining index mounting hole position.
(d) Tighten the screws (9) to 22 +/- 1 in-lb (2.5 +/- 0.1 Nm).
(e) Make sure the sealant is continuously squeezed out along the edges of the contact surfaces.
(f) If there are gaps, bubbles or voids in the sealant squeeze out, then disassemble and apply more sealant.
(g) Shape the squeezed out sealant into a fillet seal (AMM 51-31-01/201).

BOEING PROPRIETARY - Copyright (C) - Unpublished Work - See title page for details.

(h) As an option, remove the extra squeezed out sealant.

NOTE: Make sure the sealant that remains is flush with the mating part edges.

S 764-576
(5) Measure the bonding resistance between one of the actuator attachment contact surfaces on the index plate (8) (bare metal surface) and the rear spar (2).
(a) Make sure the bonding resistance is 0.002 ohm (2 milliohm) or less.

S 424-577
(6) Lockwire the screws (9) and the index plate (8) together.

S 794-578
(7) Do this task: Install the Actuator of the Engine Fuel Crossfeed Valve (AMM 28-22-12/401).

S 374-579
(8) Do this task to apply protective finishes to the bare areas of the rear spar: Apply the Corrosion Resistant Finish (Topcoat) (AMM 28-11-00/701).

NOTE: Re-apply the protective finishes to the rear spar where the electrical bonding probes removed the finishes.

(a) These are the protective finishes:
1) Alodine 600 coating
2) BMS 10-20 coating

H. Put the Airplane Back to its Usual Condition

S 414-479
(1) SAS 150-154 PRE-SB 28-34;
MTH 275, 276 PRE-SB 28-34;
Install the left auxiliary tank access door, 531BB (AMM 28-11-02/401).

S 414-480
(2) SAS 150-154 POST-SB 28-34;
SAS 050-149, 155-999;
MTH 275, 276 POST-SB 28-34;
MTH 277-999;
Install the center auxiliary tank access door, 136KZ (AMM 28-11-02/401).

BOEING PROPRIETARY - Copyright (C) - Unpublished Work - See title page for details.

S 094-032

WARNING: USE THE PROCEDURE IN AMM 32-00-15/201 TO REMOVE THE DOOR LOCKS. THE DOORS OPEN AND CLOSE QUICKLY AND CAN CAUSE INJURY TO PERSONS OR DAMAGE TO EQUIPMENT.

(3) Remove the door locks from the landing gear doors and close the doors (AMM 32-00-15/201).

S 654-033

(4) Refuel the fuel tanks if no more work is necessary (AMM 12-11-01/301).

S 214-034

(5) Make sure there are no fuel leaks.

TASK 28-22-02-824-505

6. Adapter Shaft Alignment (Fig. 402)

A. Equipment

(1) B28009-1, Adapter Shaft Alignment Tool

(2) Torque meter - 0-15 pound-inches, with a resolution of +/- 1 pound-inches (optional)

B. References

(1) AMM 28-22-12/401, Engine Fuel Crossfeed Valve Actuator

C. Access

(1) Location Zones

133	Wing Center Section (Left)
134	Wing Center Section (Right)
136	Environmental Control System Bay (Right)
531	Center Auxiliary Tank (Left)

(2) Access Panels

136KZ	Auxiliary Tank Access Door (Center)
531BB	Auxiliary Tank Access Door (Left)

D. Procedure

S 484-506

(1) Do these steps to install the alignment tool in the adapter plate (3):

(a) Remove the Engine Fuel Crossfeed Valve Actuator (AMM 28-22-12/401).

(b) Remove the top two index screws from the index plate (View I).

NOTE: The top index screws are the screws that are 180 degrees opposite to each other.

BOEING PROPRIETARY - Copyright (C) - Unpublished Work - See title page for details.

(c) Loosen the bottom index screw, but do not remove it.

NOTE: The bottom index screw may not be in the lowest position. The bottom index screw is the index screw which is not directly opposite the other two index screws.

(d) Install the alignment tool (Fig. 402):
(e) Put the alignment tool in its position with the two guide pins in the holes left by the two index screws that you removed (the scale should be on the top of the tool).
(f) Make sure the spline on the tool engages with the spline on the shaft.

S 824-507
(2) Do these steps to align the adapter shaft (Procedure 1, optional to Procedure 2):

NOTE: This procedure finds the point where the internal valve butterfly engages the valve seal. The torque required to turn the shaft increases as the butterfly engages the seal, then decreases again as the butterfly leaves the other side of the seal. Once the edge of the seal is found, the valve shaft will then be turned to center the butterfly on the seal.

(a) Put the tool handle in the extreme counterclockwise position.
(b) Turn the handle slowly in the clockwise direction at a constant rate while you note the changes in the torque necessary to turn the handle.
(c) Do the previous steps as many times as necessary to find the point in the rotation where the torque necessary to turn the handle increases significantly.
(d) If you cannot find the position in the rotation where the torque increases significantly, then use Procedure 2 below.
(e) Put the shaft in the extreme counterclockwise position again.
(f) Slowly and smoothly turn the handle of the tool clockwise until a distinct increase in torque is found and immediately stop turning the handle.
(g) Read the scale on the tool.

NOTE: This is the point where the valve butterfly starts to engage the edge of the seal.

BOEING PROPRIETARY - Copyright (C) - Unpublished Work - See title page for details.

(h) Turn the handle 13 degrees more in the clockwise direction (the scale on the tool is calibrated in degrees).

NOTE: The valve butterfly is now centered on the valve seal.

If you turn the handle past the target value, do not turn the handle back in the counterclockwise direction again. You must start the procedure again with the handle in the extreme counterclockwise position.

S 824-508

(3) Do these steps to align the adapter shaft (Procedure 2, optional to procedure 1):

NOTE: A torque meter is necessary to do this procedure.

(a) Put the tool handle in the extreme counterclockwise position.
(b) Slowly and smoothly turn the tool handle to the extreme clockwise position while you monitor the torque that you apply to the handle.
(c) Write down the maximum torque that you apply to the tool while you turn it from the extreme counterclockwise position to the extreme clockwise position.
(d) Turn the tool back to the extreme counterclockwise position.
(e) Turn the shaft clockwise again at approximately the same rate that you used before.
(f) Stop at the position where the torque increases to approximately two-thirds of the maximum torque that you wrote down before.
(g) Read the scale on the tool at this position.

NOTE: This is the position where valve butterfly starts to engage the edge of the seal.

BOEING PROPRIETARY - Copyright (C) - Unpublished Work - See title page for details.

(h) Turn the handle 13 more degrees in the clockwise direction past the reading from the previous step.

NOTE: The butterfly valve is now centered on the valve seal. If you turn the valve past the target value, do not turn it back in the counterclockwise direction. You must start again with the tool handle in the extreme counterclockwise position.

S 034-509

(4) Tighten the lockscrew on the tool to keep the adapter shaft in its position.

S 824-510

(5) Turn the index plate until the actuator mounting holes in the index plate are aligned with the two upper holes for the actuator mounting screws.

S 824-511

(6) Insert the two align screws into the holes for the actuator mounting screws to hold the index plate in alignment with the mounting plate (this is a final adjustment of the position of the index plate).

S 434-512

(7) Tighten the bottom index screw to a torque of 21-23 pound-inches.

S 084-513

(8) Carefully remove the align screws.

S 084-514

(9) Carefully remove the alignment tool from the index plate.

S 434-515

(10) Install the top two index screws (9) in the index plate (8) and tighten them to a torque of 21-23 pound-inches.

BOEING PROPRIETARY - Copyright (C) - Unpublished Work - See title page for details.

S 434-555

(11) Install the Engine Fuel Crossfeed Valve Actuator (AMM 28-22-12/401).

BOEING PROPRIETARY - Copyright (C) - Unpublished Work - See title page for details.

MAIN TANK FUEL BOOST PUMP - REMOVAL/INSTALLATION

1. General
   A. The fuel boost pump contains a housing of the fuel boost pump, two boost pumps, a discharge check valve, a motive flow and screen valve, a mounting ring and an access cover. The housing of the fuel boost pump is installed in the main fuel tank. The boost pumps, discharge check valve, motive flow and screen valve and shutoff sleeve are installed in the housing of the fuel boost pump and are fuel-tight.
   B. The housing of the fuel boost pump can be removed and installed with all the parts installed in the housing of the fuel boost pump. It is necessary to defuel and go into the main fuel tank to remove the housing of the fuel boost pump.
   C. You do not have to go into the main fuel tank to remove and install the boost pumps, discharge check valve, motive flow and screen valve and shutoff sleeve.
   D. This procedure contains 12 tasks. The tasks are:
      (1) Remove the housing of the fuel boost pump
      (2) Install the housing of the fuel boost pump
      (3) Remove the boost pump
      (4) Install the boost pump
      (5) Remove the discharge check valve
      (6) Install the discharge check valve
      (7) Remove the motive flow and screen valve
      (8) Install the motive flow and screen valve
      (9) Remove the motive flow screen
      (10) Install the motive flow screen.
      (11) Remove the shutoff sleeve
      (12) Install the shutoff sleeve.

TASK 28-22-03-004-001

2. Remove the Housing of the Fuel Boost Pump (Fig. 401)

   A. References
      (1) AMM 24-22-00/201, Electrical Power Control
      (2) AMM 28-11-00/201, Fuel Tanks
      (3) AMM 28-11-01/401, Main Tank Access Doors
      (4) AMM 28-26-00/201, Defueling

BOEING PROPRIETARY - Copyright (C) - Unpublished Work - See title page for details.

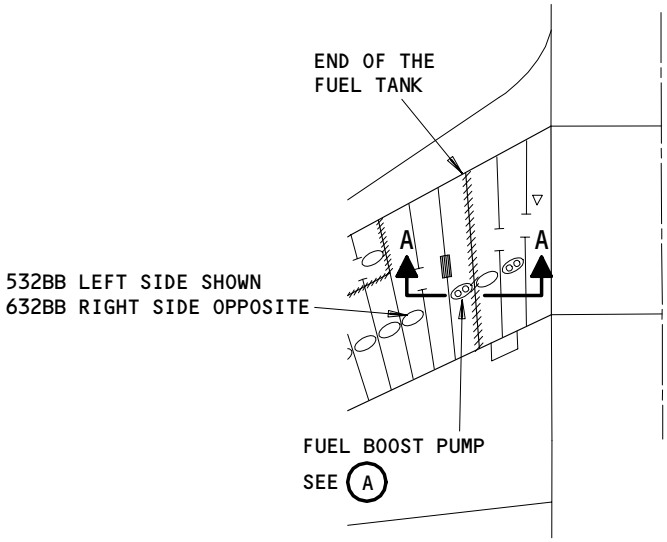

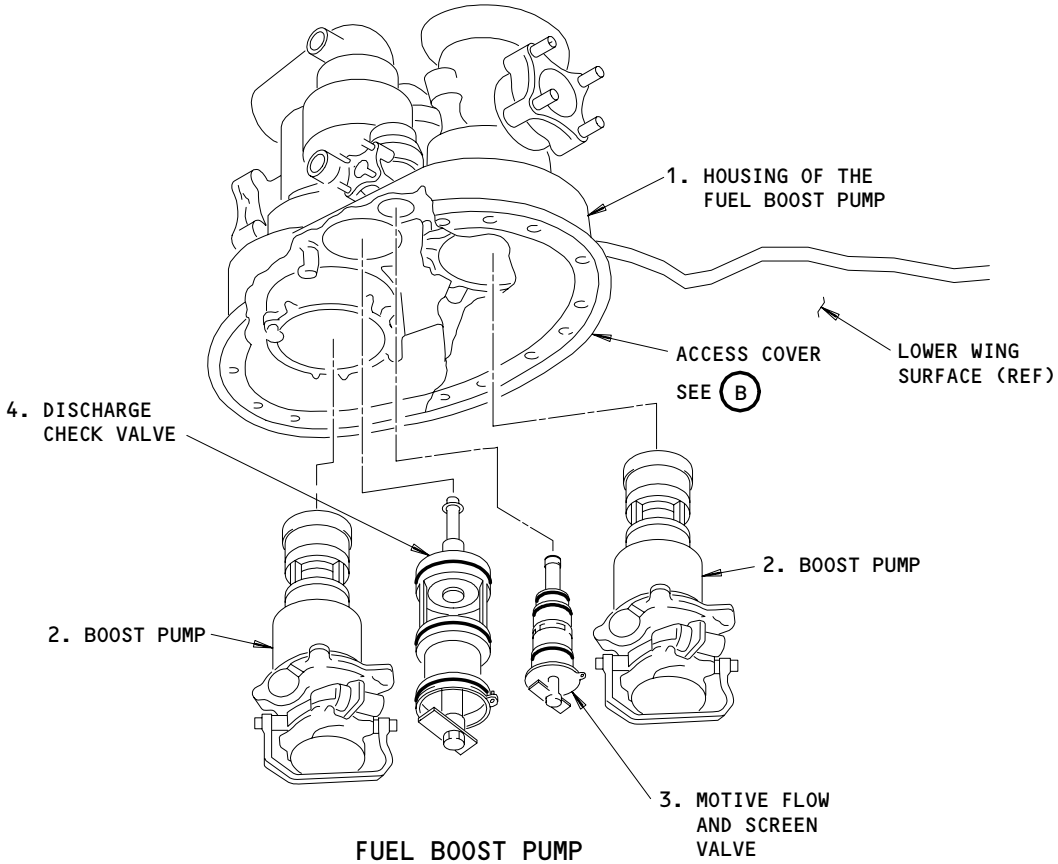

FUEL BOOST PUMP

A

Housing of the Fuel Boost Pump
Figure 401 (Sheet 1)

BOEING PROPRIETARY - Copyright (C) - Unpublished Work - See title page for details.

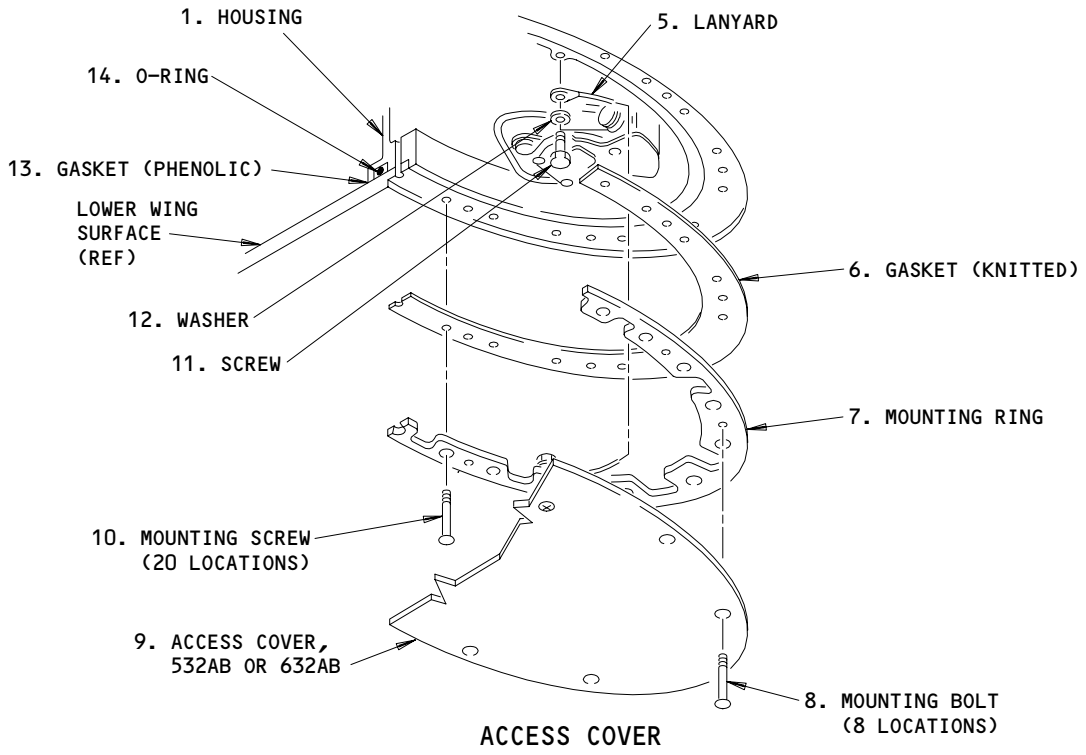

ACCESS COVER

B

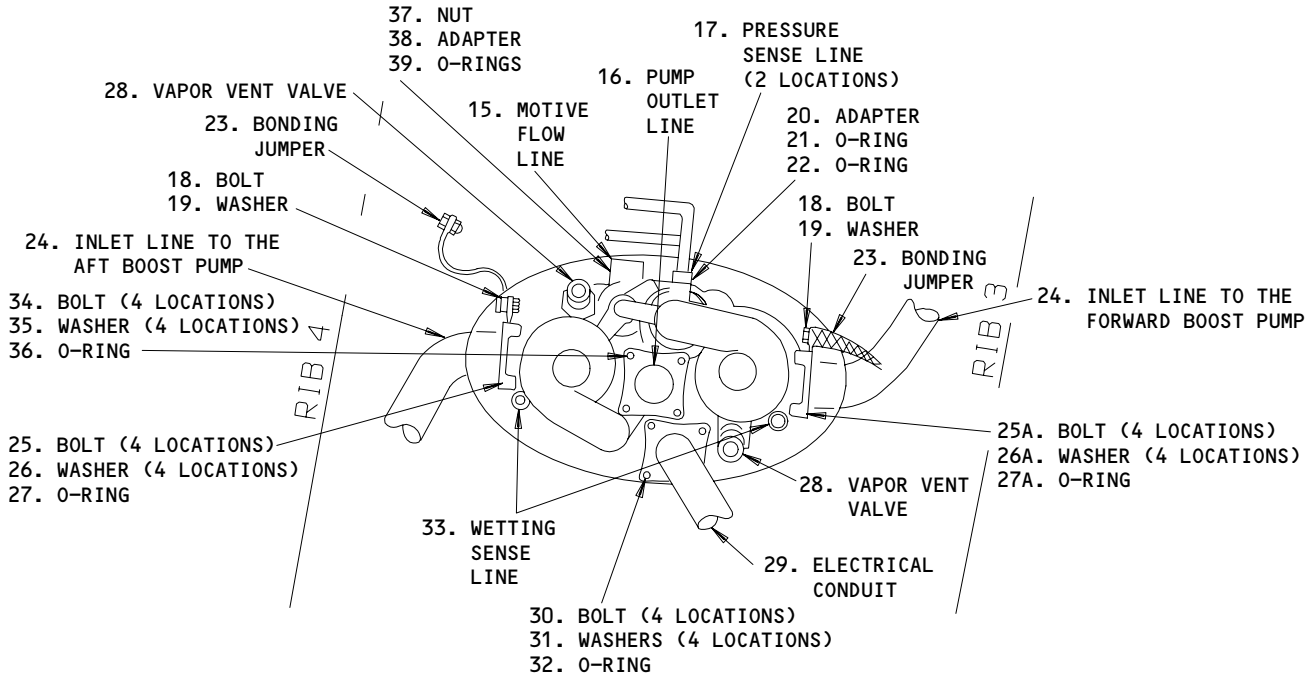

A-A
(TOP VIEW)

Housing of the Fuel Boost Pump
Figure 401 (Sheet 2)

BOEING PROPRIETARY - Copyright (C) - Unpublished Work - See title page for details.

B. Access

(1) Location Zones

532 Main Tank - Inboard of Rib No. 10 (Left)
632 Main Tank - Inboard of Rib No. 10 (Right)

(2) Access Panels

532AB Access Cover (Left)
532BB Main Tank Access Door (Left)
632AB Access Cover (Right)
632BB Main Tank Access Door (Right)

C. Procedure

S 654-002
(1) Defuel the applicable main fuel tank (AMM 28-26-00/201).

S 864-003
(2) Remove electrical power (AMM 24-22-00/201).

S 944-150

WARNING: OBEY THE PURGING AND FUEL TANK ENTRY PRECAUTIONS. FAILURE TO OBEY THE PRECAUTIONS COULD CAUSE INJURY TO PERSONS OR DAMAGE TO EQUIPMENT.

(3) Do the Purging and Fuel Tank Entry procedure for the applicable main fuel tank (AMM 28-11-00/201).

S 014-004
(4) Remove the applicable left or right main tank access door, 532BB or 632BB (AMM 28-11-01/401).

S 014-005
(5) Hold the access cover (9) and remove the mounting bolts (8) that attach the access cover (9) to the lower wing surface (View B, Fig. 401).

BOEING PROPRIETARY - Copyright (C) - Unpublished Work - See title page for details.

S 014-006
(6) Lower the access cover (9).

S 034-007
(7) Hold the access cover (9) and remove the screw (11) and washer (12) that hold the lanyard (5) to the housing (1).

S 014-008
(8) Remove the access cover (9).

S 434-009
(9) Install the screw (11) and washer (12) on the housing (1).

S 034-010
(10) Remove the mounting screws (10), mounting ring (7), and gasket (6) from the lower wing surface.

S 034-011
(11) Disconnect the electrical connectors (40) from the boost pumps (2) (Fig. 402).

NOTE: Make marks on the electrical connectors (40) to make sure they are install on the correct boost pump.

S 034-012
(12) Disconnect the wiring support clamps (54) from the housing (1) (View A, Fig. 402).

S 014-013
(13) Go into the main fuel tank.

S 034-014
(14) Remove the bolts (30) and washers (31) that attach the electrical conduit (29) to the housing (1) (View A-A, Fig. 401).

S 034-015
(15) Remove the electrical wires from the housing (1).

S 034-016
(16) Discard the O-ring (32).

S 034-017
(17) Remove the bolts (18) and washers (19) to disconnect the bonding jumpers (23) from the housing (1).

S 034-018
(18) Remove the bolts (25) and washers (26) to disconnect the inlet lines (24) to the forward and aft boost pumps from the housing (1).

BOEING PROPRIETARY - Copyright (C) - Unpublished Work - See title page for details.

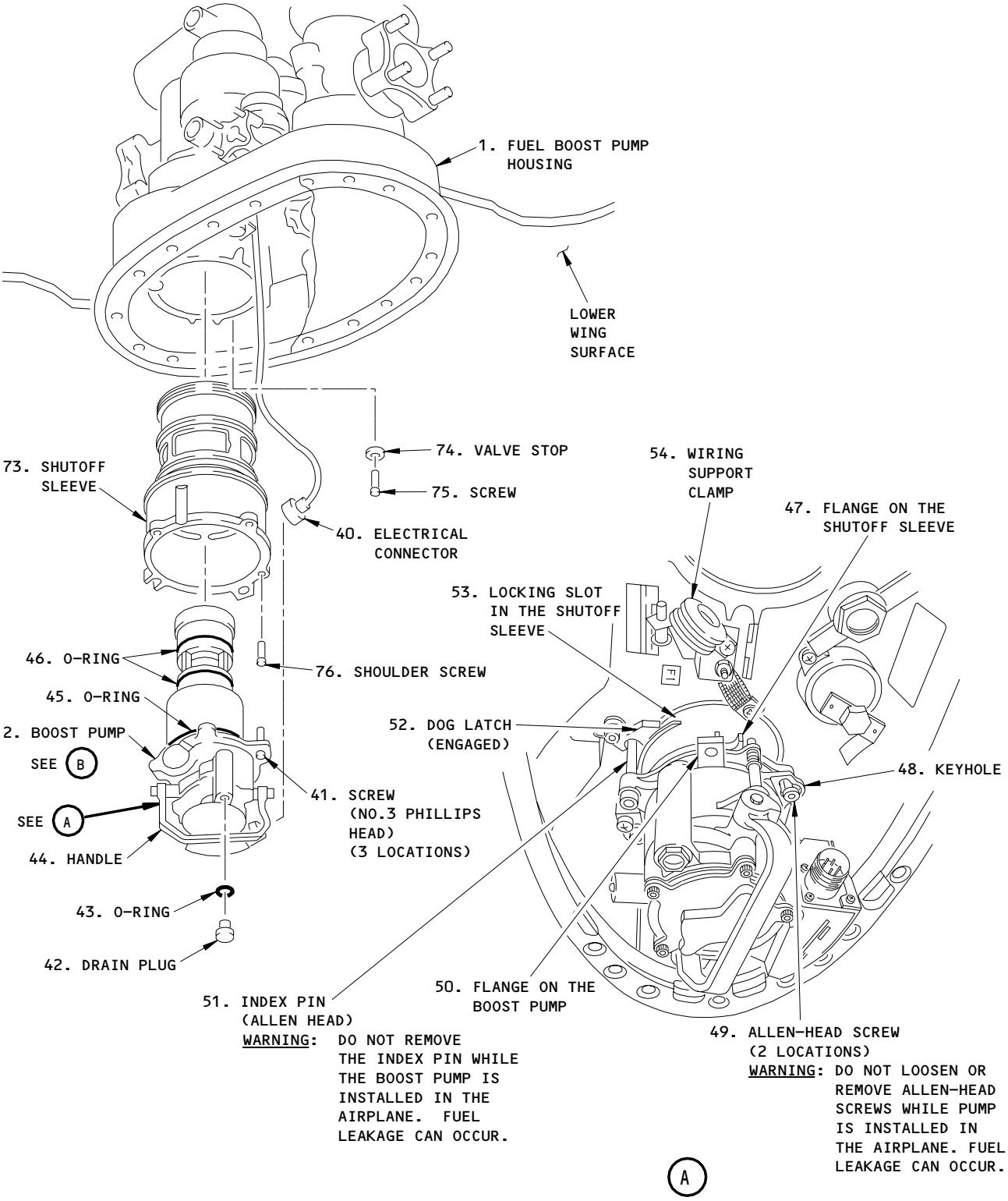

Boost Pump Installation
Figure 402 (Sheet 1)

BOEING PROPRIETARY - Copyright (C) - Unpublished Work - See title page for details.

NOTE: EROSION CAN OCCUR ANYWHERE ON THE STRUT, NOT ONLY IN THE AREAS SHOWN ON THE ILLUSTRATION.

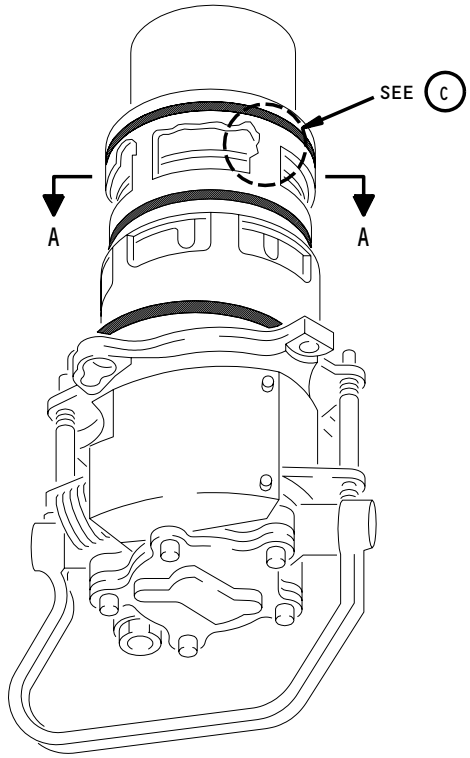

BOOST PUMP

B

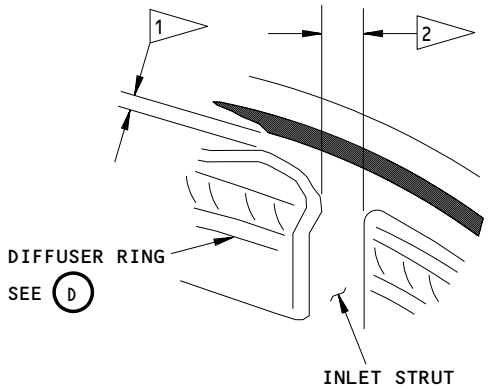

C

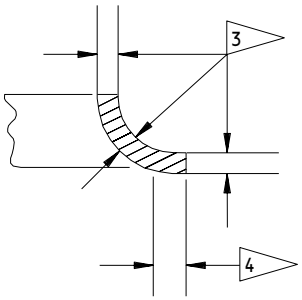

DIFFUSER RING

D

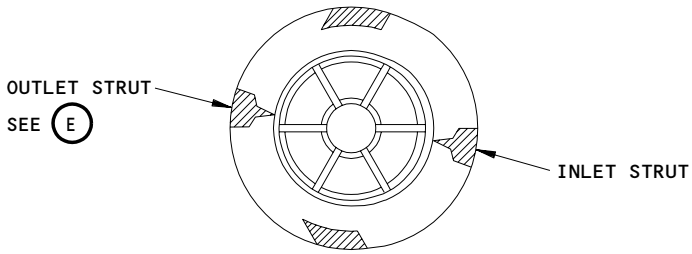

A-A

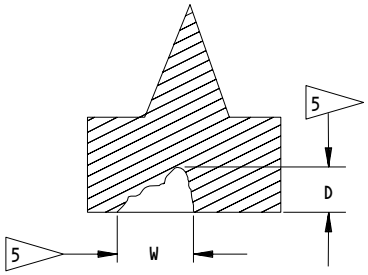

E

Boost Pump Installation
Figure 402 (Sheet 2)

BOEING PROPRIETARY - Copyright (C) - Unpublished Work - See title page for details.

NOTES AND DIMENSIONS

1 NOTED DIMENSION: 0.040 INCH (1.016 MILLIMETERS) MINIMUM.

2 NOTED DIMENSION: 0.170 INCH (4.318 MILLIMETERS) MINIMUM. MEASURE BETWEEN THE POINT AT WHICH EROSION DEPTH IS AT LEAST 0.020 INCH (0.508 MILLIMETERS) AND THE EDGE OF THE STRUT AS ILLUSTRATED. DO NOT INCLUDE SURFACE AREA THAT HAS ONLY A FROSTED OR DISCOLORED APPEARANCE.

3 NOTED THICKNESS: 0.030 INCH (0.762 MILLIMETER) MINIMUM.

4 NOTED EROSION: 0.050 INCH (1.27 MILLIMETERS) MAXIMUM.

5 NOTED DIMENSION: EROSION WIDTH TIMES EROSION DEPTH NOT TO EXCEED 0.049 SQUARE INCH (31.61 SQUARE MILLIMETERS) MAXIMUM. MEASURE BETWEEN THE POINT AT WHICH EROSION DEPTH IS AT LEAST 0.020 INCH (0.508 MILLIMETERS) AND THE EDGE OF THE STRUT AS ILLUSTRATED. DO NOT INCLUDE SURFACE AREA THAT HAS ONLY A FROSTED OR DISCOLORED APPEARANCE.

PROCEDURE

1. DIMENSIONALLY CHECK PUMP AND MOTOR HOUSING ASSEMBLY ACCORDING TO 1. REPLACE PUMP AND MOTOR HOUSING ASSEMBLY IF ONE OR MORE STRUTS DO NOT MEET LIMITS.

2. IDENTIFY INLET STRUT BY POSITIONING PUMP ACCORDING TO ILLUSTRATION. MARK INLET STRUT BY ATTACHING A PIECE OF MASKING TAPE TO THE INLET STRUT.

3. DIMENSIONALLY CHECK THREE UNMARKED STRUTS ACCORDING TO 2. REPLACE PUMP AND MOTOR HOUSING ASSEMBLY IF ONE OR MORE UNMARKED STRUTS DO NOT MEET LIMITS. LIMITS APPLY BOTH ABOVE AND BELOW THE DIFFUSER RING.

4. DIMENSIONALLY CHECK INLET STRUT AS FOLLOWS:

   A. DIMENSIONALLY CHECK PORTION OF STRUT BELOW THE POINT AT WHICH DIFFUSER RING IS CAST INTO BOOST PUMP ACCORDING TO 2. REPLACE PUMP AND MOTOR HOUSING ASSEMBLY IF LIMITS ARE NOT MET.

   B. DIMENSIONALLY CHECK PORTION OF STRUT ABOVE POINT AT WHICH DIFFUSER RING IS CAST INTO BOOST PUMP ACCORDING TO 2. STRUT MAY BE REPAIRED ONLY IF HOUSING MEETS THE REQUIREMENTS OF 1. REPAIR STRUT ACCORDING TO REPAIR.

5. DIMENSIONALLY CHECK THE DIFFUSER RING ACCORDING TO 3 AND 4. REPLACE PUMP AND MOTOR HOUSING ASSEMBLY IF THE DIFFUSER RING DOES NOT MEET REQUIREMENTS.

6. DIMENSIONALLY CHECK OUTLET STRUT FOR EROSION ACCORDING TO 5. REPLACE PUMP AND MOTOR HOUSING ASSEMBLY IF LIMIT IS NOT MET.

   NOTE: EROSION ALONG THE LENGTH OF THE STRUT IS NOT IMPORTANT.

Boost Pump Installation
Figure 402 (Sheet 3)

BOEING PROPRIETARY - Copyright (C) - Unpublished Work - See title page for details.

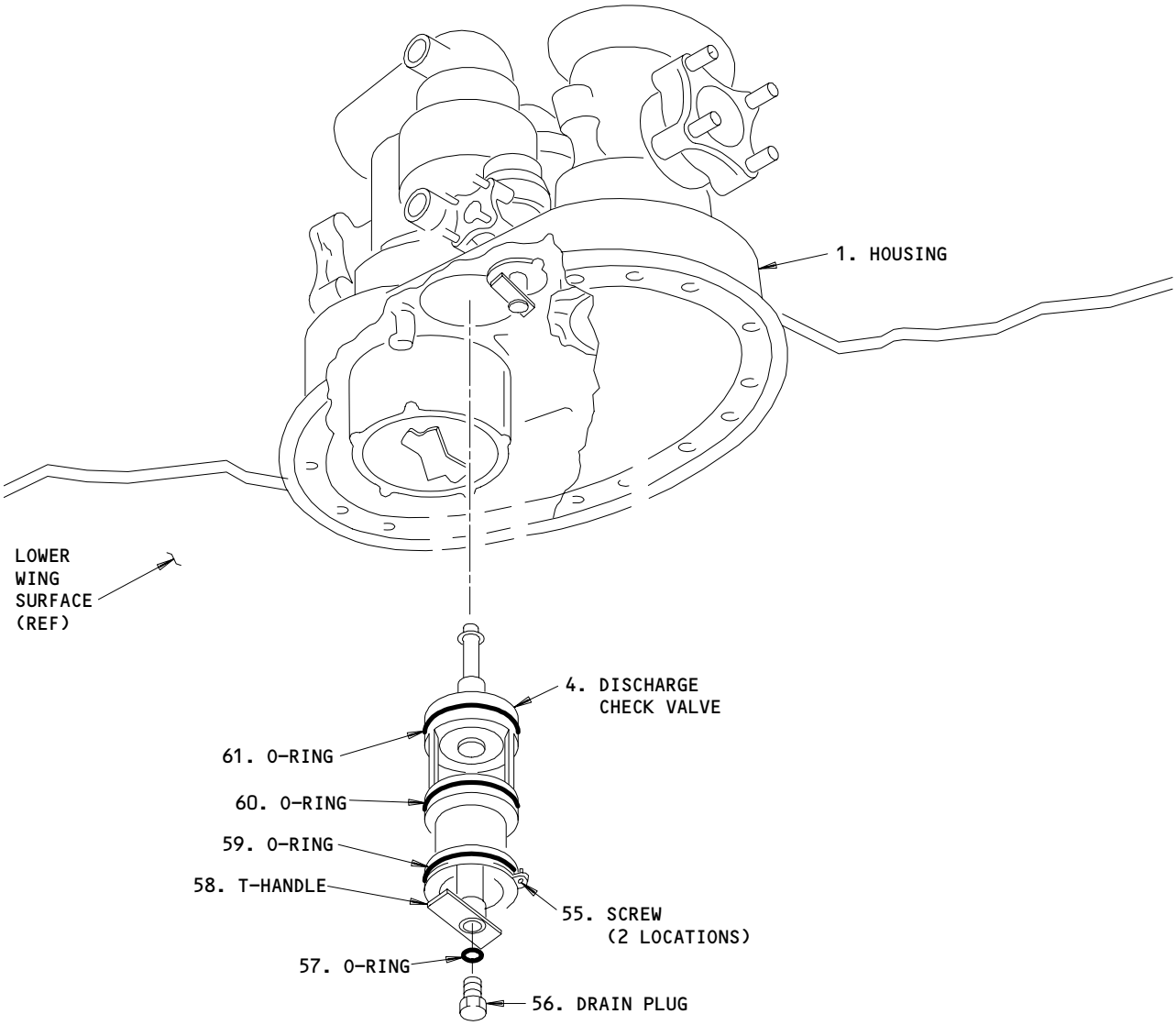

Discharge Check Valve Installation
Figure 403

BOEING PROPRIETARY - Copyright (C) - Unpublished Work - See title page for details.

S 034-019
(19) Discard the O-rings (27).

S 034-020
(20) Remove the bolts (34) and washers (35) to disconnect the pump outlet line (16) from the housing (1).

S 034-021
(21) Discard the O-ring (36).

S 034-022
(22) Remove the nut (37) and adapter (38) to disconnect the motive flow line (15) from the housing (1).

S 034-023
(23) Discard the O-rings (39).

S 034-024
(24) Disconnect the two wetting sense lines (33) from the housing (1).

S 034-025
(25) Remove the adapter (20) to disconnect the two pressure sense lines (17) from the housing (1).

S 684-213
(26) Make sure the pressure sense line is drained.

NOTE: This will help to prevent the collection of water in the pressure sense line. Water can freeze and cause damage to the pressure switch. You can loosen the pressure switch connection (AMM 28-42-01/401) to help to drain the fuel and water from the pressure sense line.

S 034-151
(27) Disconnect the vapor vent valves (28) from the housing.

S 024-026

CAUTION: DO NOT USE A LEVER ON (PRY) THE HOUSING (1) WHEN YOU REMOVE IT. DAMAGE TO THE GASKET (13) COULD OCCUR IF YOU ARE NOT CAREFUL.

(28) Carefully remove the housing (1) from the lower wing surface and the main fuel tank.

BOEING PROPRIETARY - Copyright (C) - Unpublished Work - See title page for details.

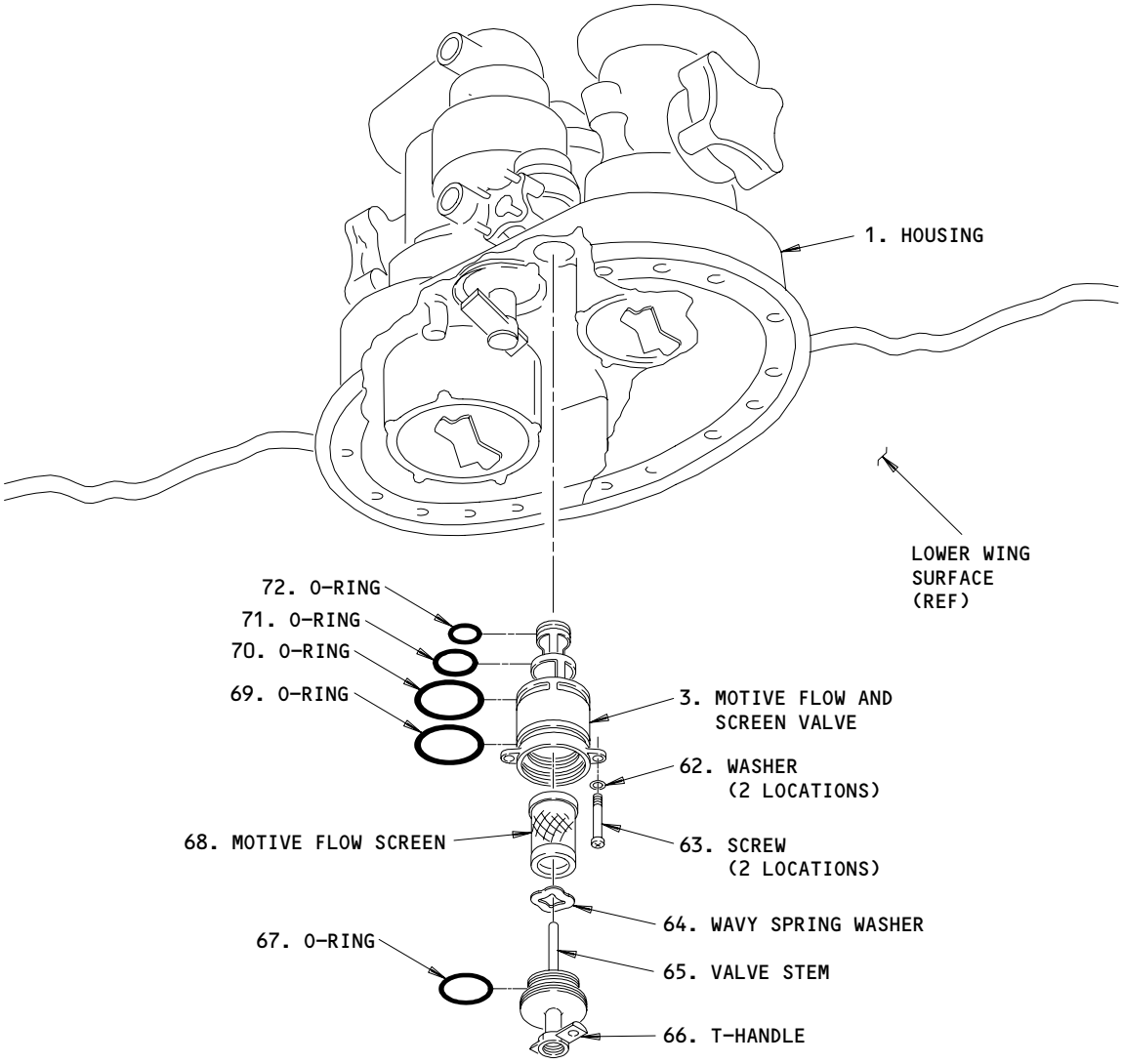

Motive Flow and Screen Valve Installation
Figure 404

BOEING PROPRIETARY - Copyright (C) - Unpublished Work - See title page for details.

TASK 28-22-03-404-027

3. Install the Housing of the Fuel Boost Pump (Fig. 401)

A. Consumable Materials

(1) A00767 Sealant - Integral Fuel Tank BMS 5-45

B. References

(1) AMM 12-11-01/301, Fuel Tank Pressure Fueling
(2) AMM 20-10-21/601, Electrical Bonding
(3) AMM 24-22-00/201, Electrical Power Control
(4) AMM 28-11-00/201, Fuel Tanks
(5) AMM 28-11-01/401, Main Tank Access Doors
(6) AMM 28-22-00/501, Engine Fuel Feed System
(7) AMM 51-31-01/201, Seals and Sealing

C. Access

(1) Location Zones

532 Main Tank - Inboard of Rib No. 10 (Left)
632 Main Tank - Inboard of Rib No. 10 (Right)

(2) Access Panels

532AB Access Cover (Left)
532BB Main Tank Access Door (Left)
632AB Access Cover (Right)
632BB Main Tank Access Door (Right)

D. Procedure

S 944-192

WARNING: OBEY THE PURGING AND FUEL TANK ENTRY PRECAUTIONS. FAILURE TO OBEY THE PRECAUTIONS COULD CAUSE INJURY TO PERSONS OR DAMAGE TO EQUIPMENT.

(1) Obey the Purging and Fuel Tank Entry precautions (AMM 28-11-00/201).

S 214-028

(2) Make sure the seal surfaces on the housing (1) and the lower wing surface are clean (View B, Fig. 401).

S 214-029

(3) Make sure there is no damage to the gasket (13) on the housing (1).

BOEING PROPRIETARY - Copyright (C) - Unpublished Work - See title page for details.

S 424-030
(4) With a new O-ring (14), put the housing (1) on the opening in the lower wing surface.

S 434-031
(5) From out of the fuel tank, install a new gasket (6), mounting ring (7) and mounting screws (10), but do not tighten the mounting screws (10).

S 394-032
(6) Apply the sealant around the bottom of the housing (1) (AMM 51-31-01/201).

S 434-033
(7) Install new O-rings (27), bolts (25) and washers (26) to connect the inlet lines (24) to the forward and aft boost pumps to the housing (1) (View A-A, Fig. 401).

S 434-034
(8) Install a new O-ring (36), the four bolts (34) and four washers (35) to connect the pump outlet line (16) to the housing (1).

S 434-035
(9) Install the O-rings (39), adapter (38) and nut (37) to connect the motive flow line (15) to the housing (1).

S 434-036
(10) Connect the two wetting sense lines (33) to the housing (1).

S 434-037
(11) Install the O-rings (21, 22) and adapter (20) to connect the two pressure sense lines (17) to the housing (1).

S 434-038
(12) Install a new O-ring (32) on the electrical conduit (29).

BOEING PROPRIETARY - Copyright (C) - Unpublished Work - See title page for details.

S 434-039
(13) Install the electrical wires through the electrical conduit port on the housing (1).

S 434-040
(14) Install a new O-ring (32), the bolts (30) and washers (31) to connect the electrical conduit (29) to the housing (1).

S 434-152
(15) Connect the vapor vent valves (28) to the housing (1).

S 434-041
(16) Install the bolts (18) and washers (19) to connect the two bonding jumpers (23) to the housing (1).

NOTE: CDCCL - Refer to the task: Airworthiness Limitation Precautions (AMM 28-00-00/201), for important information on Critical Design Configuration Control Limitations (CDCCLs).

NOTE: This is applicable to Airworthiness Limitation 28-AWL-07.

S 214-042

CAUTION: MAKE SURE YOU REMOVE ALL DISCARDED MATERIALS FROM THE FUEL TANK. DISCARDED MATERIALS IN THE FUEL TANK COULD CAUSE A BLOCKAGE OF THE EJECTOR PUMPS AND PREVENT WATER SCAVENGE.

(17) Make sure you remove all discarded materials from the fuel tank.

S 434-043
(18) From out of the fuel tank, tighten the mounting screws (10) to 51-56 pound-inches (View B, Fig. 401).

S 434-044
(19) Connect the electrical connectors (40) to the two boost pumps (2) (Fig. 402).

S 434-045
(20) Install the wiring support clamps (54) on the housing (1) (View A, Fig. 402).

BOEING PROPRIETARY - Copyright (C) - Unpublished Work - See title page for details.

S 224-046
(21) Make sure the bonding resistance between the housing (1) and the airplane structure is 0.0003 ohm or less (AMM 20-10-21/601).

NOTE: CDCCL - Refer to the task: Airworthiness Limitation Precautions (AMM 28-00-00/201), for important information on Critical Design Configuration Control Limitations (CDCCLs).

NOTE: This is applicable to Airworthiness Limitation 28-AWL-07.

S 034-203
(22) Remove the screw (11) and washer (12) that attach to the lanyard (5) from the housing (1) (View B, Fig. 401).

S 414-204
(23) Use the screw (11) and washer (12) to connect the lanyard (5) on the access cover (9) to the housing (1).

S 414-205
(24) Hold the access cover (9) on the lower wing surface and install the mounting bolts (8).

S 414-206
(25) Tighten the mounting bolts (8) to 20-22 pound-inches.

S 414-207
(26) Install the applicable left or right main tank access door, 532BB or 632BB (AMM 28-11-01/401).

S 864-154
(27) Supply electrical power (AMM 24-22-00/201).

S 654-224
(28) Refuel the applicable main fuel tank to a minimum of 1700 lbs (800 kgs) (AMM 12-11-01/301).

NOTE: This is the minimum fuel quantity necessary to cover the seal surface of the pump housing and to make sure the fuel boost pumps are correctly primed.

You can refuel the main fuel tank by pressure fueling (AMM 12-11-01/301) or by tank to tank transfer (AMM 28-26-00/201).

BOEING PROPRIETARY - Copyright (C) - Unpublished Work - See title page for details.

S 214-048
(29) Make sure there are no fuel leaks.

S 714-049
(30) Do the operational test for the applicable fuel boost pump (AMM 28-22-00/501).

S 864-050
(31) Remove electrical power if it is not necessary (AMM 24-22-00/201).

TASK 28-22-03-004-051
4. Remove the Boost Pump (Fig. 402)
A. Equipment
(1) Container - for use with jet fuel, 1 gallon capacity, commercially available.
B. Access
(1) Location Zones
532 Main Tank - Inboard of Rib No. 10 (Left)
632 Main Tank - Inboard of Rib No. 10 (Right)

(2) Access Panels
532AB Access Cover (Left)
632AB Access Cover (Right)

C. Procedure

S 864-208
(1) To remove the left forward boost pump, open this circuit breaker on the main power distribution panel, P6, and attach a DO-NOT-CLOSE tag:
(a) 6G24, L FWD FUEL BOOST PUMP

S 864-052
(2) To remove the left aft boost pump, open this circuit breaker on the main power distribution panel, P6, and attach a DO-NOT-CLOSE tag:
(a) 6G15, L AFT FUEL BOOST PUMP

BOEING PROPRIETARY - Copyright (C) - Unpublished Work - See title page for details.

S 864-053
(3) To remove the right forward boost pump, open this circuit breaker on the main power distribution panel, P6, and attach a DO-NOT-CLOSE tag:
(a) 6G18, R FWD FUEL BOOST PUMP

S 864-054
(4) To remove the right aft boost pump, open this circuit breaker on the the main power distribution panel, P6, and attach a DO-NOT-CLOSE tag:
(a) 6G21, R AFT FUEL BOOST PUMP

S 014-055
(5) Hold the access cover (9) and remove the mounting bolts (8) (View B, Fig. 401).

S 014-056
(6) Lower the access cover (9) until the lanyard (5) holds the access cover (9).

S 034-057
(7) Disconnect the electrical connector (40) from the boost pump (2) you will remove (Fig. 402).

NOTE: Make marks on the electrical connectors (40) to make sure they are installed on the correct boost pump (2).

S 034-058
(8) For the aft boost pump (2), disconnect the wiring support clamp (54) from between the two boost pumps (2) (View A, Fig. 402).

S 034-059
(9) Loosen the drain plug (42) but do not remove it.

S 034-217

WARNING: DO NOT REMOVE THE ALLEN HEAD INDEX PIN (51). FUEL LEAKAGE CAN OCCUR.

(10) Remove the Phillips head screw (41) that attaches the bonding strap to the boost pump (2).

NOTE: The screw (41) is attached to the bonding strap.

BOEING PROPRIETARY - Copyright (C) - Unpublished Work - See title page for details.

S 034-061

(11) Remove the two remaining Phillips head screws (41) from the boost pump (2).

NOTE: The three Phillips head screws (41) attach to the boost pump (2) and the shutoff sleeve (73).

S 034-231

WARNING: DO NOT LOOSEN OR REMOVE ALLEN-HEAD SCREWS (49) WHILE THE BOOST PUMP (2) IS INSTALLED ON THE AIRPLANE. LOOSENING OR REMOVING THESE SCREWS WILL CAUSE THE BOOST PUMP (2) TO SEPARATE FROM THE SHUTOFF SLEEVE (73). FUEL LEAKAGE CAN OCCUR.

WARNING: DO NOT TURN THE BOOST PUMP (2). FUEL LEAKAGE COULD OCCUR IF YOU TURN THE BOOST PUMP (2) WITHOUT THE SHUTOFF SLEEVE (73) ATTACHED.

(12) Pull the handle (44) on the boost pump (2) down 90 degrees.

S 024-063

WARNING: MAKE SURE YOU PULL THE BOOST PUMP (2) AND SHUTOFF SLEEVE (73) DOWN FULLY. FUEL LEAKAGE COULD OCCUR IF YOU DO NOT PULL THE BOOST PUMP (2) AND THE SHUTOFF SLEEVE (73) DOWN FULLY.

(13) Use the handle (44) to pull the boost pump (2) and the shutoff sleeve (73) down until the valve stop (74) stops the movement (approximately 1.5 inches).

NOTE: Increased force is necessary for the last 1/4 inch of movement.

S 214-064

(14) Make sure the locking slot (53) in the shutoff sleeve and the dog latch (52) align.

BOEING PROPRIETARY - Copyright (C) - Unpublished Work - See title page for details.

S 034-065

CAUTION: DO NOT LET THE BOOST PUMP (2) TURN WHEN YOU REMOVE THE DRAIN PLUG (42). IF THE BOOST PUMP (2) TURNS, DAMAGE TO THE BOOST PUMP (2) AND DRAIN PLUG (42) CAN OCCUR.

CAUTION: MAKE SURE FUEL DOES NOT CONTINUOUSLY DRAIN. IF FUEL CONTINUOUSLY DRAINS, THE SHUTOFF SLEEVE (73) IS NOT CLOSED AND YOU MUST PUSH THE BOOST PUMP (2) UP TO REINSTALL IT AND DEFUEL THE FUEL TANK.

(15) Hold the boost pump (2) and remove the drain plug (42) and the O-ring (43) from the boost pump (2).

S 034-233

(16) If fuel continuously drains, do the steps that follow:
- (a) Install the boost pump (2).
- (b) Defuel the left/right main fuel tank (AMM 28-26-00/201).
- (c) Remove the boost pump (2).

S 654-066

(17) Drain all fuel remaining in the boost pump (2) into a container.

S 214-067

WARNING: MAKE SURE THE DOG LATCH (52) ON THE HOUSING (1) ALIGNS WITH THE LOCKING SLOT (53) IN THE SHUTOFF SLEEVE. FUEL LEAKAGE CAN OCCUR IF YOU TURN THE BOOST PUMP (2) WITHOUT THE SHUTOFF SLEEVE (73) ATTACHED.

(18) Make sure the dog latch (52) and the locking slot (53) align.

S 864-068

(19) Turn the boost pump (2) approximately 12 degrees counterclockwise until it stops.

NOTE: This releases the boost pump (2) from the shutoff sleeve (73).

S 824-069

(20) Make sure the dog latch (52) on the housing (1) engages with the locking slot (53) on the shutoff sleeve (73).
- (a) If the dog latch (52) does not engage with the locking slot (53), do the steps that follow:
  - 1) Make sure the boost pump (2) and the shutoff sleeve (73) touch.
  - 2) Turn the boost pump (2) in the clockwise direction.

BOEING PROPRIETARY - Copyright (C) - Unpublished Work - See title page for details.

3) Pull the boost pump (2) down until the dog latch (52) and the locking slot (53) align.
4) Turn the boost pump (2) approximately 12 degrees counterclockwise until it stops.

NOTE: This releases the boost pump (2) from the shutoff sleeve (73).

5) Make sure the dog latch (52) engages with the locking slot (53).

S 024-070
(21) Pull down on the handle (44) and remove the boost pump (2) from the shutoff sleeve (73).

S 034-071
(22) Remove the O-rings (45, 46) on the outer diameter of the boost pump (2).

S 224-072
(23) Examine the struts on the boost pump (2).
(a) If one or more of the struts is less than the dimension shown in Figure 402, replace the boost pump (2).

S 434-073
(24) Install the drain plug (42) in the boost pump (2) if you do not install that boost pump (2).

TASK 28-22-03-404-074
5. Install the Boost Pump (Fig. 402)

A. Consumable Materials
(1) D00215 Fluorosilicone Grease, DC FS-1292
B. Parts

AMM			AIPC		
FIG	ITEM	NOMENCLATURE	SUBJECT	FIG	ITEM
402	2	Boost Pump (Pumping Unit)	28-22-03	01	60
402	43	O-ring (Packing)	28-22-03	01	80
402	45	O-ring (Packing)	28-22-03	01	90
402	46	O-ring (Packing)	28-22-03	01	85

BOEING PROPRIETARY - Copyright (C) - Unpublished Work - See title page for details.

C. References
(1) AMM 20-10-21/601, Electrical Bonding
(2) AMM 28-22-00/501, Engine Fuel Feed System
(3) AMM 28-22-03/601, Main Tank Fuel Boost Pump

D. Access
(1) Location Zones
532 Main Tank - Inboard of Rib No. 10 (Left)
632 Main Tank - Inboard of Rib No. 10 (Right)

(2) Access Panels
532AB Access Cover (Left)
632AB Access Cover (Right)

E. Procedure

S 224-235
(1) FUEL BOOST PUMP 5006003B OR 5006003C (PRE-SB 28-88);
Do an inspection of the boost pump or make sure the boost pump was inspected before you install it (AMM 28-22-03/601).

S 434-218

WARNING: MAKE SURE THE ALLEN HEAD INDEX PIN (51) IS INSTALLED ON THE NEW PUMP. FUEL LEAKAGE CAN OCCUR IF THE INDEX PIN IS NOT INSTALLED CORRECTLY.

(2) If you install the boost pump (2) you removed, do the steps that follow:
(a) Install three new O-rings (45, 46), lightly lubricated with fluorosilicone grease, DC FS-1292, on the boost pump (2).
(b) Install a new O-ring (43), lightly lubricated with fluorosilicone grease, DC FS-1292, on the drain plug (42).

S 434-155
(3) If the drain plug (42) is not installed (Fig. 402), do the steps that follow:
(a) Install the drain plug (42) on the boost pump (2).
(b) Tighten the drain plug (42) to 30-40 pound-inches.
(c) Install the lockwire on the drain plug (42).

S 644-075
(4) Lubricate the O-rings (45, 46) on the outer diameter of the boost pump (2) with fluorosilicone grease, DC FS-1292.

NOTE: The fluorosilicone grease, DC FS-1292, makes the installation of the boost pump (2) easier.

BOEING PROPRIETARY - Copyright (C) - Unpublished Work - See title page for details.

S 824-076
(5) Align the keyhole (48) on the boost pump (2) with the allen-head screws (49) (View A, Fig. 402).

S 424-209
(6) Install the boost pump (2) in the shutoff sleeve (73).
(a) Do not turn the boost pump (2) while you push up on the boost pump (2).
(b) Push up on the boost pump (2) until the boost pump (2) and the shutoff sleeves (73) touch.

S 214-078
(7) Make sure the allen-head screws (49) go through the keyholes (48).

S 864-079
(8) Turn the boost pump (2) approximately 12 degrees in the clockwise direction.

S 864-080
(9) Turn the handle (44) on the boost pump (2) up to its usual condition.

S 424-081
(10) Push the boost pump (2) and the shutoff sleeve (73) up until the shutoff sleeve (73) touches the housing (1).

NOTE: Do not turn the boost pump (2).

S 434-082
(11) Install the Phillips head screw (41) that attaches the bonding strap to the boost pump (2).

S 434-083
(12) Install the two remaining Phillips head screws (41) on the boost pump (2) and shutoff sleeve (73).

S 434-084
(13) Tighten the screws (41) to 48-53 pound-inches.

BOEING PROPRIETARY - Copyright (C) - Unpublished Work - See title page for details.

S 224-085
(14) Make sure the bonding resistance between the housing (1) and the boost pump (2) is 0.00035 ohm (0.35 milliohm) or less (AMM 20-10-21/601).

NOTE: CDCCL - Refer to the task: Airworthiness Limitation Precautions (AMM 28-00-00/201), for important information on Critical Design Configuration Control Limitations (CDCCLs).

NOTE: This is applicable to Airworthiness Limitation 28-AWL-07.

S 434-086
(15) Connect the electrical connector (40) to the boost pump (2).

S 434-087
(16) For the aft boost pump (2), install the wiring support clamp (54) on the housing (1) between the two boost pumps (2).

S 654-225
(17) Refuel the applicable main fuel tank to a minimum of 1700 lbs (800 kgs) (AMM 12-11-01/301).

NOTE: This is the minimum fuel quantity necessary to cover the seal surface of the pump housing and to make sure the fuel boost pumps are correctly primed.

You can refuel the main fuel tank by pressure fueling (AMM 12-11-01/301) or by tank to tank transfer (AMM 28-26-00/201).

S 214-157
(18) Make sure there are no fuel leaks at the boost pump (2).

S 414-158
(19) Put and hold the access cover (9) against the lower wing surface (View B, Fig. 401).
(a) Make sure the lanyard (5) is in the housing (1).

S 414-159
(20) Install the mounting bolts (8) on the access cover (9).

S 414-160
(21) Tighten the mounting bolts (8) to 20-22 pound-inches.

S 864-088
(22) For the left forward boost pump, remove the DO-NOT-CLOSE tag and close this circuit breaker on the P6 panel:
(a) 6G24, L FWD FUEL BOOST PUMP

BOEING PROPRIETARY - Copyright (C) - Unpublished Work - See title page for details.

S 864-161
(23) For the left aft boost pump, remove the DO-NOT-CLOSE tag and close this circuit breaker on the P6 panel:
(a) 6G15, L AFT FUEL BOOST PUMP

S 864-162
(24) For the right forward boost pump, remove the DO-NOT-CLOSE tag and close this circuit breaker on the P6 panel:
(a) 6G18, R FWD FUEL BOOST PUMP

S 864-163
(25) For the right aft boost pump, remove the DO-NOT-CLOSE tag and close this circuit breaker on the P6 panel:
(a) 6G21, R AFT FUEL BOOST PUMP

S 714-089
(26) Do the operational test for the applicable boost pump (AMM 28-22-00/501).

TASK 28-22-03-004-090
6. Remove the Discharge Check Valve (Fig. 403)
A. Equipment
(1) Container - for use with jet fuel, 1 gallon capacity, commercially available
B. References
(1) AMM 12-11-03/301, Fuel Sump Draining
(2) AMM 28-26-00/201, Defueling
C. Access
(1) Location Zones
532 Main Tank - Inboard of Rib No. 10 (Left)
632 Main Tank - Inboard of Rib No. 10 (Right)

(2) Access Panels
532AB Access Cover (Left)
632AB Access Cover (Right)

D. Procedure

S 654-091
(1) Defuel the applicable main fuel tank (AMM 28-26-00/201).

S 654-092
(2) Drain the applicable fuel tank sump (AMM 12-11-03/301).

S 864-164
(3) For the discharge check valve in the left main fuel tank, open these circuit breakers on the main power distribution panel, P6, and attach DO-NOT-CLOSE tags:
(a) 6G15, L AFT FUEL BOOST PUMP
(b) 6G24, L FWD FUEL BOOST PUMP

BOEING PROPRIETARY - Copyright (C) - Unpublished Work - See title page for details.

S 864-165

(4) For the discharge check valve in the right main fuel tank, open these circuit breakers on the main power distribution panel, P6, and attach DO-NOT-CLOSE tags:
   (a) 6G18, R FWD FUEL BOOST PUMP
   (b) 6G21, R AFT FUEL BOOST PUMP

S 014-166

(5) Hold the access cover (9) and remove the mounting bolts (8) that attach the access cover (9) to the lower wing surface (View B, Fig. 401).

S 014-202

(6) Lower the access cover (9) until the lanyard (5) holds the access cover (9).

S 034-093

(7) Remove the screws (41) from the boost pump (2) nearest to the discharge check valve (4) (View A, Fig. 401).

S 034-094

(8) Remove the wiring support clamp (54) from the housing (1) (View A, Fig. 402).

S 034-095

CAUTION: DO NOT TURN THE BOOST PUMP (2). FUEL LEAKAGE CAN OCCUR IF YOU TURN THE BOOST PUMP (2).

(9) Move the handle (44) on the boost pump (2) down, but do not turn the boost pump (2).

S 034-096

CAUTION: PULL THE BOOST PUMP (2) DOWN FULLY. FUEL LEAKAGE CAN OCCUR IF YOU DO NOT PULL THE BOOST PUMP (2) DOWN FULLY.

(10) Use the handle (44) and pull the boost pump (2) down until it stops but do not turn the boost pump (2).

S 034-097

(11) Remove the drain plug (56) from the discharge check valve (4) (Fig. 403).

BOEING PROPRIETARY - Copyright (C) - Unpublished Work - See title page for details.

S 654-098
(12) Drain all fuel remaining into a container.

S 034-099
(13) Remove the two screws (55) from the discharge check valve (4).

S 024-100
(14) Use the T-handle (58) to pull the discharge check valve (4) down from the housing (1) to remove it.

S 034-101
(15) If you install a new discharge check valve (4), install the drain plug (56) in the discharge check valve (4).

TASK 28-22-03-404-102

7. Install the Discharge Check Valve (Fig. 403)

A. Consumable Materials
(1) D00215 Fluorosilicone Grease, DC FS-1292

B. References
(1) AMM 12-11-01/301, Fuel Tank Pressure Fueling
(2) AMM 20-10-19/401, O-rings
(3) AMM 28-22-00/501, Engine Fuel Feed System

C. Access
(1) Location Zones
532 Main Tank - Inboard of Rib No. 10 (Left)
632 Main Tank - Inboard of Rib No. 10 (Right)

(2) Access Panels
532AB Access Cover (Left)
632AB Access Cover (Right)

D. Procedure

S 434-103
(1) If you install the removed discharge check valve (4), do the steps that follow:
(a) Lubricate the O-ring (57) with fluorosilicone grease, DC FS-1292 (Fig. 403).

BOEING PROPRIETARY - Copyright (C) - Unpublished Work - See title page for details.

(b) Install the O-ring (57) on the drain plug (56).

S 434-167

(2) If the drain plug (56) is not installed, do the steps that follow:
(a) Install the drain plug (56) into the discharge check valve (4) (Fig. 403).
(b) Tighten the drain plug (56) to 30-40 pound-inches.
(c) Install the lockwire on the drain plug (56).

S 644-168

(3) Lubricate the new O-rings (59, 60, 61) with fluorosilcone grease, DC FS-1292 (Fig. 403).

S 434-104

(4) Install the new O-rings (59, 60, 61) on the outer diameter of the discharge check valve (4) (AMM 20-10-19/401).

S 424-105

(5) Put and hold the discharge check valve (4) in the housing (1).

S 424-169

(6) Install the two screws (55) in the discharge check valve (4).

S 424-170

(7) Tighten the two screws to 20-22 pound-inches.

S 864-106

(8) Turn the handle (44) on the applicable boost pump (2) up to its usual position (Fig. 402).

S 434-107

(9) Push the applicable boost pump (2) up until it is in the housing (1).

S 434-171

(10) Install the screws (41) on the boost pump (2).

BOEING PROPRIETARY - Copyright (C) - Unpublished Work - See title page for details.

S 434-172
(11) Tighten the screws (41) to 48-53 pound-inches.

S 434-108
(12) Install the wiring support clamp (54) on the housing (1) to hold the electrical wires (View A, Fig. 402).

S 654-226
(13) Refuel the applicable main fuel tank to a minimum of 1700 lbs (800 kgs) (AMM 12-11-01/301).

NOTE: This is the minimum fuel quantity necessary to cover the seal surface of the pump housing and to make sure the fuel boost pumps are correctly primed.

You can refuel the main fuel tank by pressure fueling (AMM 12-11-01/301) or by tank to tank transfer (AMM 28-26-00/201).

S 214-110
(14) Make sure there are no fuel leaks for the discharge check valve (4) and the boost pump (2).

S 414-173
(15) Put and hold the access cover (9) against the lower wing surface (View B, Fig. 401).
(a) Make sure the lanyard (5) is in the housing (1).

S 414-174
(16) Install the mounting bolts (8) on the access cover (9).

S 414-175
(17) Tighten the mounting bolts (8) to 20-22 pound-inches.

BOEING PROPRIETARY - Copyright (C) - Unpublished Work - See title page for details.

S 864-111
(18) For the discharge check valve (4) in the left main fuel tank, remove the DO-NOT-CLOSE tags and these circuit breakers on the P6 panel:
(a) 6G24, L FWD FUEL BOOST PUMP
(b) 6G15, L AFT FUEL BOOST PUMP

S 864-176
(19) For the discharge check valve in the right main fuel tank, remove the DO-NOT-CLOSE tags and close these circuit breakers on the P6 panel:
(a) 6G18, R FWD FUEL BOOST PUMP
(b) 6G21, R AFT FUEL BOOST PUMP

S 714-177
(20) Do the operational test for the applicable fuel boost pump (AMM 28-22-00/501).

TASK 28-22-03-004-112
8. Remove the Motive Flow and Screen Valve (Fig. 404)
A. References
(1) AMM 28-26-00/201, Defueling
B. Access
(1) Location Zones
532 Main Tank - Inboard of Rib No. 10 (Left)
632 Main Tank - Inboard of Rib No. 10 (Right)

(2) Access Panels
532AB Access Cover (Left)
632AB Access Cover (Right)

C. Procedure

S 654-113
(1) Defuel the applicable main fuel tank (AMM 28-26-00/201).

BOEING PROPRIETARY - Copyright (C) - Unpublished Work - See title page for details.

S 864-114
(2) For the motive flow and screen valve (3) in the left main fuel tank, open these circuit breakers on the main power distribution panel, P6, and attach DO-NOT-CLOSE tags:
(a) 6G15, L AFT FUEL BOOST PUMP
(b) 6G24, L FWD FUEL BOOST PUMP

S 864-178
(3) For the motive flow and screen valve (3) in the right main fuel tank, open these circuit breakers on the main power distribution panel, P6, and attach DO-NOT-CLOSE tags:
(a) 6G18, R FWD FUEL BOOST PUMP
(b) 6G21, R AFT FUEL BOOST PUMP

S 014-115
(4) Hold the access cover (9) and remove the mounting bolts (8) (View B, Fig. 401).

S 014-116
(5) Lower the access cover (9) until the lanyard (5) holds the access cover (9).

S 034-117
(6) Remove the screws (63) and washers (62) on the motive flow and screen valve (3) (Fig. 404).

S 024-118
(7) Use the T-handle (66) to pull the motive flow and screen valve (3) down and out of the housing (1).

S 034-179
(8) If you install the motive flow and screen valve (3) again, remove the four O-rings (69, 70, 71, 72).
(a) Discard the four O-rings (69, 70, 71, 72).

TASK 28-22-03-404-119
9. Install the Motive Flow and Screen Valve (Fig. 404)
A. Consumable Materials
(1) D00215 Fluorosilicone Grease, DC FS-1292

BOEING PROPRIETARY - Copyright (C) - Unpublished Work - See title page for details.

B. References
(1) AMM 12-11-01/301, Fuel Tank Pressure Fueling
(2) AMM 20-10-19/401, O-rings
(3) AMM 28-22-00/501, Engine Fuel Feed System

C. Access
(1) Location Zones
532 Main Tank - Inboard of Rib No. 10 (Left)
632 Main Tank - Inboard of Rib No. 10 (Right)

(2) Access Panels
532AB Access Cover (Left)
632AB Access Cover (Right)

D. Procedure

S 434-120
(1) If the motive flow and screen valve (3) you install is not new, do the steps that follow:
(a) Lightly lubricate the four new O-rings (69, 70, 71, 72) with fluorosilicone grease, DC FS-1292 (Fig. 404).
(b) Install the four new O-rings (69, 70, 71, 72) on the motive flow and screen valve (3) (AMM 20-10-19/401).

S 644-121
(2) Lightly lubricate the O-rings (69, 70, 71, 72) on the motive flow and screen valve (3) with fluorosilicone grease, DC FS-1292 (Fig. 404).

S 424-122
(3) Push the motive flow and screen valve (3) in the housing (1).

S 424-180
(4) Install the screws (63) and washers (62) to attach the motive flow and screen valve (3) to the housing (1).

BOEING PROPRIETARY - Copyright (C) - Unpublished Work - See title page for details.

S 434-123
(5) Tighten the screws (63) to 20-22 pound-inches.

S 654-227
(6) Refuel the applicable main fuel tank to a minimum of 1700 lbs (800 kgs) (AMM 12-11-01/301).

NOTE: This is the minimum fuel quantity necessary to cover the seal surface of the pump housing and to make sure the fuel boost pumps are correctly primed.

You can refuel the main fuel tank by pressure fueling (AMM 12-11-01/301) or by tank to tank transfer (AMM 28-26-00/201).

S 214-125
(7) Make sure there are no fuel leaks at the motive flow and screen valve (3).

S 414-197
(8) Put and hold the access cover (9) against the lower wing surface (View B, Fig. 401).
(a) Make sure the lanyard (5) is in the housing (1).

S 414-198
(9) Install the mounting bolts (8) on the access cover (9).

S 414-199
(10) Tighten the mounting bolts (8) to 20-22 pound-inches.

S 864-126
(11) For the motive flow and screen valve (3) in the left main fuel tank, remove the DO-NOT-CLOSE tags and close these circuit breakers on the P6 panel:
(a) 6G15, L AFT FUEL BOOST PUMP

BOEING PROPRIETARY - Copyright (C) - Unpublished Work - See title page for details.

(b) 6G24, L FWD FUEL BOOST PUMP

S 864-181

(12) For the motive flow and screen valve (3) in the right main fuel tank, remove the DO-NOT-CLOSE tags and close these circuit breakers on the P6 panel:
(a) 6G18, R FWD FUEL BOOST PUMP
(b) 6G21, R AFT FUEL BOOST PUMP

S 714-182

(13) Do the operational test for the applicable fuel boost pump (AMM 28-22-00/501).

TASK 28-22-03-004-127

10. Remove the Motive Flow Screen (Fig. 404)

A. Access

(1) Location Zones
532 Main Tank - Inboard of Rib No. 10 (Left)
632 Main Tank - Inboard of Rib No. 10 (Right)

(2) Access Panels
532AB Access Cover (Left)
632AB Access Cover (Right)

B. Procedure

S 014-200

(1) Hold the access cover (9) and remove the mounting bolts (8) that attach the access cover (9) to the lower wing surface (View B, Fig. 401).

S 014-201

(2) Lower the access cover (9) until the lanyard (5) holds the access cover (9).

S 034-128

CAUTION: REMOVE ALL OF THE LOCKWIRE FROM THE MOTIVE FLOW AND SCREEN VALVE (3). IF YOU DO NOT REMOVE ALL OF THE LOCKWIRE, THREAD GALLING CAN OCCUR.

(3) Remove the lockwire from motive flow and screen valve (3) (Fig. 404).

NOTE: This lets you remove the T-handle (66).

BOEING PROPRIETARY - Copyright (C) - Unpublished Work - See title page for details.

S 024-129

CAUTION: USE ONLY MANUAL PRESSURE ON THE T-HANDLE (66). IF YOU DO NOT USE ONLY MANUAL PRESSURE, DAMAGE TO THE VALVE STEM (65) CAN OCCUR.

(4) Remove the T-handle (66) of the motive flow screen (68) from the motive flow and screen valve (3).

NOTE: The motive flow screen (68) and valve stem (65) are attached to the T-handle (66).

S 024-131
(5) Remove the motive flow screen (68) from the T-handle (66).

S 034-183
(6) Discard the O-ring (67).

S 284-184
(7) Make sure you keep the wavy spring washer (64).

TASK 28-22-03-404-132
11. Install the Motive Flow Screen (Fig. 404)
A. Consumable Materials
(1) D00215 Fluorosilicone Grease, DC FS-1292
(2) D50226 Lubricant - Sandstrom 28A Solid Film, MIL-PRF-46147C

B. Access
(1) Location Zones
532 Main Tank - Inboard of Rib No. 10 (Left)
632 Main Tank - Inboard of Rib No. 10 (Right)

BOEING PROPRIETARY - Copyright (C) - Unpublished Work - See title page for details.

(2) Access Panels
532AB Access Cover (Left)
632AB Access Cover (Right)

C. Procedure

S 644-133
(1) Lubricate the O-ring (67) with fluorosilicone grease, DC FS-1292 (Fig. 404).

S 434-186
(2) Install the O-ring (67) around the threads of the T-handle (66).

S 644-134
(3) Lubricate the threads on the T-handle (66) with the solid film lubricant.

S 434-135
(4) Put the wavy spring washer (64) around the valve stem (65) in the T-handle (66).

S 424-136
(5) Install the narrow end of the motive flow screen (68) in the T-handle (66) around the valve stem (65).

S 424-137
(6) Install the T-handle (66) in the motive flow and screen valve (3).

S 434-193
(7) Install the lockwire on the motive flow and screen valve (3).

S 414-194
(8) Put and hold the access cover (9) against the lower wing surface (View B, Fig. 401).
(a) Make sure the lanyard (5) is in the housing (1).

S 414-195
(9) Install the mounting bolts (8) on the access cover (9).

S 414-196
(10) Tighten the mounting bolts (8) to 20-22 pound-inches.

BOEING PROPRIETARY - Copyright (C) - Unpublished Work - See title page for details.

TASK 28-22-03-004-138

12. Remove the Shutoff Sleeve (Fig. 405)

A. References

(1) AMM 28-26-00/201, Defueling

B. Access

(1) Location Zones

532 Main Tank - Inboard of Rib No. 10 (Left)
632 Main Tank - Inboard of Rib No. 10 (Right)

(2) Access Panels

532AB Access Cover (Left)
632AB Access Cover (Right)

C. Procedure

S 654-139

(1) Defuel the applicable main fuel tank (AMM 28-26-00/201).

S 034-211

(2) Do the Remove the Boost Pump procedure for the applicable boost pump (2).

S 034-142

(3) Remove the screw (75) and the valve stop (74).

NOTE: Do not discard the screw (75).

S 024-140

(4) Remove the shoulder screws (76) from the shutoff sleeve (73), if it is necessary (Fig. 405).

NOTE: Do not discard the shoulder screws (76).

S 024-141

(5) Remove the shutoff sleeve (73) from the housing (1).

BOEING PROPRIETARY - Copyright (C) - Unpublished Work - See title page for details.

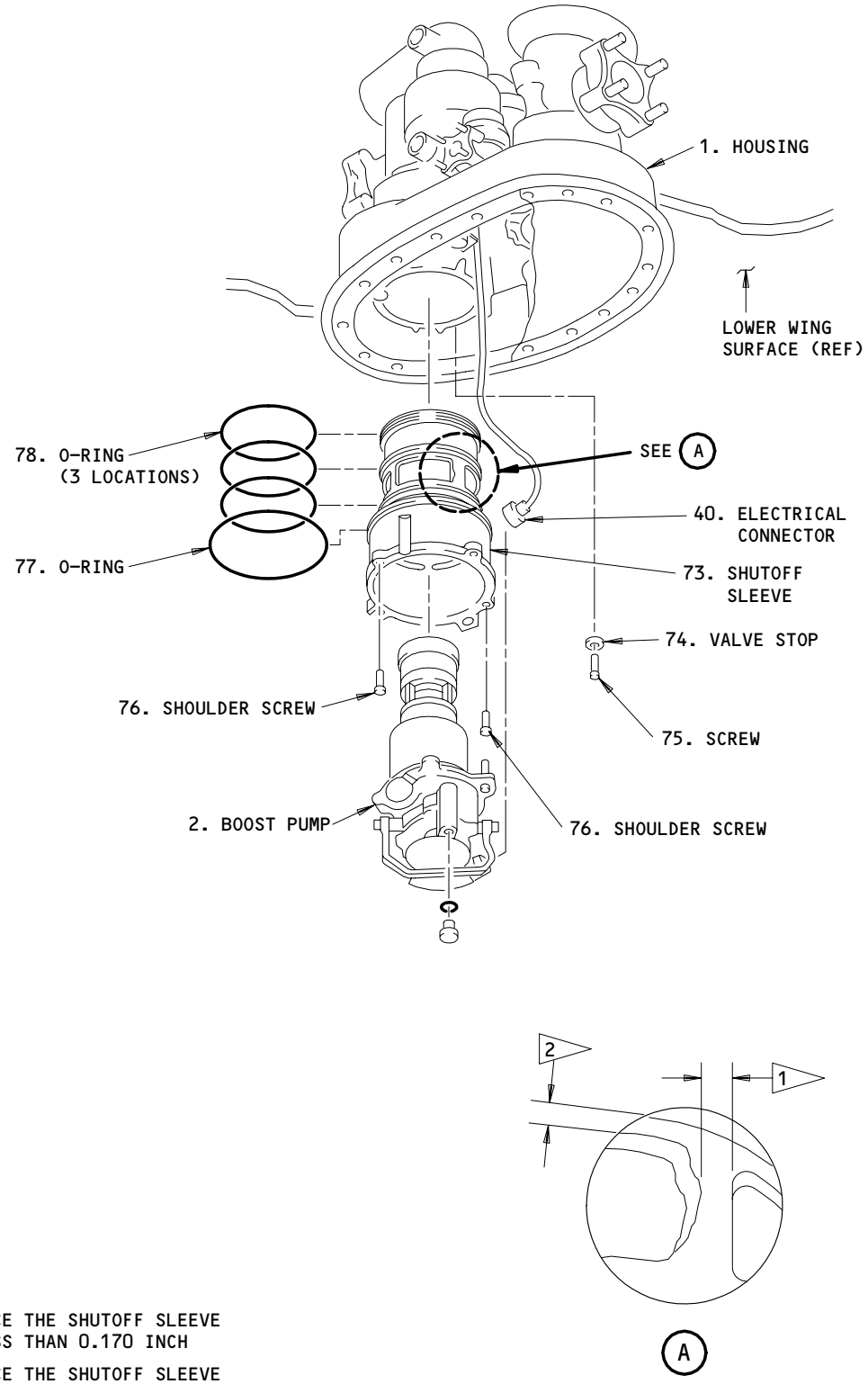

1 REPLACE THE SHUTOFF SLEEVE IF LESS THAN 0.170 INCH

2 REPLACE THE SHUTOFF SLEEVE IF LESS THAN 0.040 INCH

Shutoff Sleeve Installation
Figure 405

BOEING PROPRIETARY - Copyright (C) - Unpublished Work - See title page for details.

S 034-143
(6) Remove O-rings (77, 78) from the shutoff sleeve (73).

S 034-187
(7) Discard the O-rings (77, 78).

S 224-188
(8) Look at the struts of the shutoff sleeve (73) (View A, Fig. 405).
(a) If one or more of the struts have less than the dimensions shown, replace the shutoff sleeve (73).

TASK 28-22-03-404-144
13. Install the Shutoff Sleeve (Fig. 405)
A. Consumable Materials
(1) D00215 Fluorosilicone Grease, DC FS-1292
(2) B00415 3M Torque Paint EC1252-WHITE or equivalent.
B. Parts

AMM			AIPC		
FIG	ITEM	NOMENCLATURE	SUBJECT	FIG	ITEM
405	73	Shutoff Sleeve	28-22-03	01	127
	77	O-ring (Packing)			140
	78	O-ring (Packing)			135

C. References
(1) AMM 12-11-01/301, Fuel Tank Pressure Fueling
(2) AMM 20-10-19/401, O-rings
(3) AMM 28-22-00/501, Engine Fuel Feed System
D. Access
(1) Location Zones
532 Main Tank - Inboard of Rib No. 10 (Left)
632 Main Tank - Inboard of Rib No. 10 (Right)

BOEING PROPRIETARY - Copyright (C) - Unpublished Work - See title page for details.

(2) Access Panels
532AB Access Cover (Left)
632AB Access Cover (Right)

E. Procedure

S 434-212
(1) If the shutoff sleeve (73) you install is not new, do the steps that follow:
(a) Lightly lubricate the four new O-rings (77, 78) with fluorosilicone grease, DC FS-1292 (Fig. 405).
(b) Install the four new O-rings (77, 78) on the shutoff sleeve (73) (AMM 20-10-19/401).

S 644-189
(2) Lubricate the O-rings (77, 78) on the shutoff sleeve (73) with fluorosilicone grease, DC FS-1292 (Fig. 405).

NOTE: This makes it easier to install the shutoff valve (73).

S 424-146
(3) Put and hold the shutoff sleeve (73) in the housing (1).

S 434-145
(4) Install the valve stop (74) and screw (75).

S 434-190
(5) Tighten the screw (75) to 20-22 pound-inches.

S 424-147

CAUTION: MAKE SURE THE SHOULDER SCREWS (76) ARE INSTALLED ON THE SHUTOFF SLEEVE (73). IF THE SHOULDER SCREWS (76) ARE NOT INSTALLED, FUEL LEAKAGE COULD OCCUR WHEN YOU REMOVE THE BOOST PUMP (2).

(6) Install the shoulder screws (76) on the shutoff sleeve (73), if it is necessary.

NOTE: The two shoulder screws (76) are necessary part of the shutoff sleeve (73). Do not install the shutoff sleeve (73) without the shoulder screws (76).

BOEING PROPRIETARY - Copyright (C) - Unpublished Work - See title page for details.

S 434-148
(7) Tighten the shoulder screws to 20-22 pound-inches.

S 644-228
(8) Fill the heads of the shoulder screws with 3M torque paint or equivalent.

S 434-149
(9) Do the Install the Boost Pump procedure for the applicable boost pump (2).

S 654-234
(10) Refuel the applicable main fuel tank to a minimum of 1700 lbs (800 kgs) (AMM 12-11-01/301).

NOTE: This is the minimum fuel quantity necessary to cover the seal surface of the pump housing and to make sure the fuel boost pumps are correctly primed.

You can refuel the main fuel tank by pressure fueling (AMM 12-11-01/301) or by tank to tank transfer (AMM 28-26-00/201).

BOEING PROPRIETARY - Copyright (C) - Unpublished Work - See title page for details.

MAIN TANK FUEL BOOST PUMP - INSPECTION/CHECK

1. General
   A. The Main Tank Fuel Boost Pump Inspection task is not required for all fuel pumps. Fuel boost pumps 5006003B and 5006003C require this check. Fuel boost pumps 5006003D and subsequent do not require the Main Tank Fuel Boost Pump Inspection task.
   B. The bonding resistance task contains a functional check of the bonding resistance between the structure and the main tank fuel boost pump.
   C. This procedure contains these tasks:
      (1) AIRPLANES WITH FUEL BOOST PUMP 5006003B OR 5006003C (PRE-SB 28A88);
          An inspection of the main tank fuel boost pump.
      (2) Bonding Resistance Check.

TASK 28-22-03-226-006

2. AIRPLANES WITH FUEL BOOST PUMP 5006003B OR 5006003C (PRE-SB 28A88);
   Main Tank Fuel Boost Pump Inspection
   A. References
      (1) AMM 28-22-03/401, Main Tank Fuel Boost Pump
   B. Procedure

S 036-002
(1) Do this task for the applicable boost pump: Remove the Boost Pump (AMM 28-22-03/401).

S 216-007
(2) Make sure that the boost pump contains a flame arrestor.
    (a) If there is no flame arrestor, install a new boost pump.

S 976-003
(3) Measure the distance from the impeller end of the shaft to the finned plug (Fig. 601).
    (a) The distance must be 1.625 +/- 0.070 inches (41.3 +/- 1.7 millimeters).

S 976-004
(4) If the measurement is less than or equal to 1.695 inches (43.0530 millimeters), the spring pin and finned plug are not out of position (the pump is OK).
    (a) Install the boost pump that you removed (AMM 28-22-03/401).

S 976-005
(5) If the measurement is more than 1.695 inches (43.0530 millimeters), the spring pin is damaged or broken, return the boost pump to the repair shop for replacement of the spring pin and finned plug (SB 28A0077 or SB 28A0081).
    (a) Install a new boost pump (AMM 28-22-03/401).

BOEING PROPRIETARY - Copyright (C) - Unpublished Work - See title page for details.

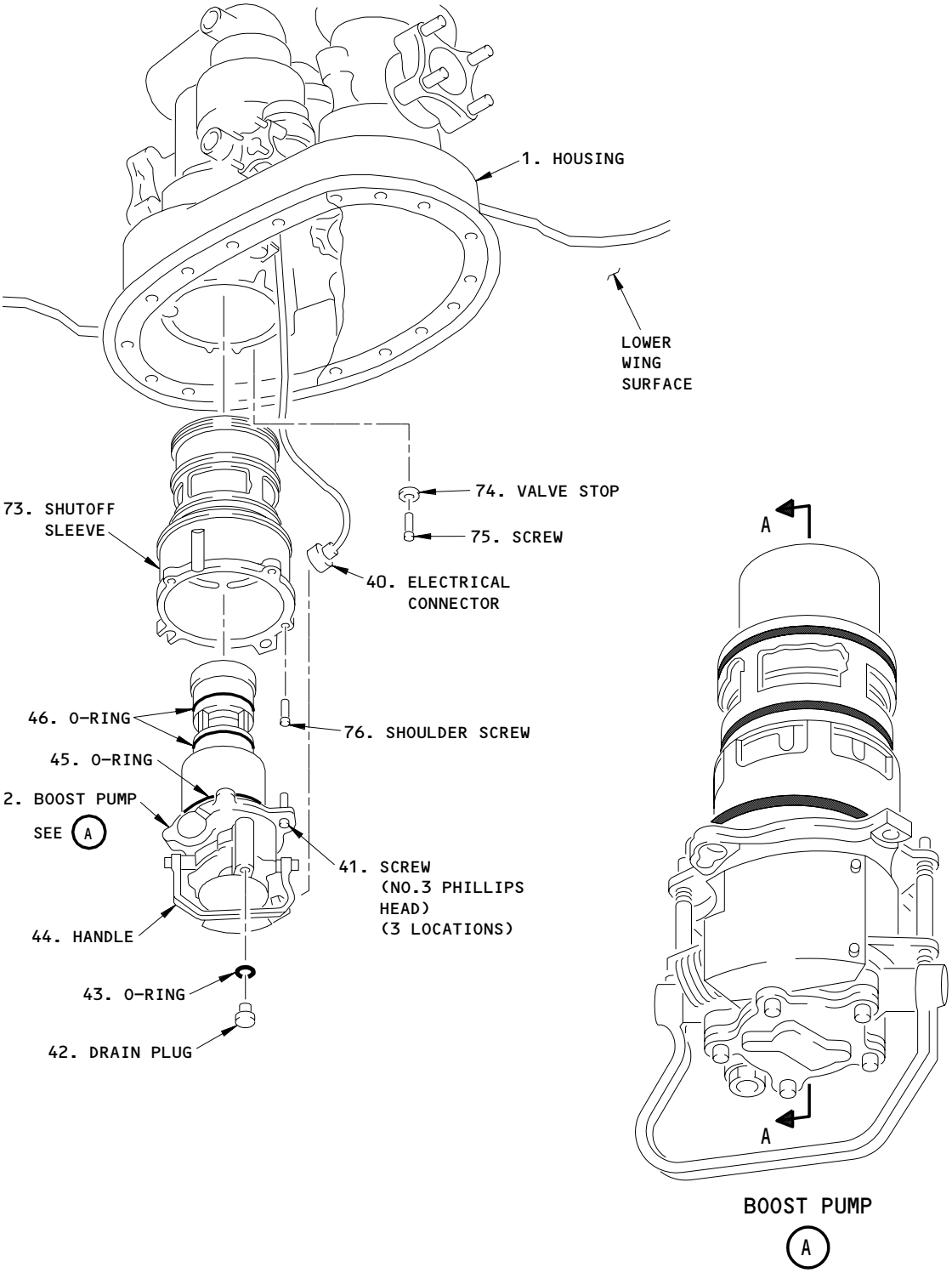

Boost Pump Installation
Figure 601 (Sheet 1)

BOEING PROPRIETARY - Copyright (C) - Unpublished Work - See title page for details.

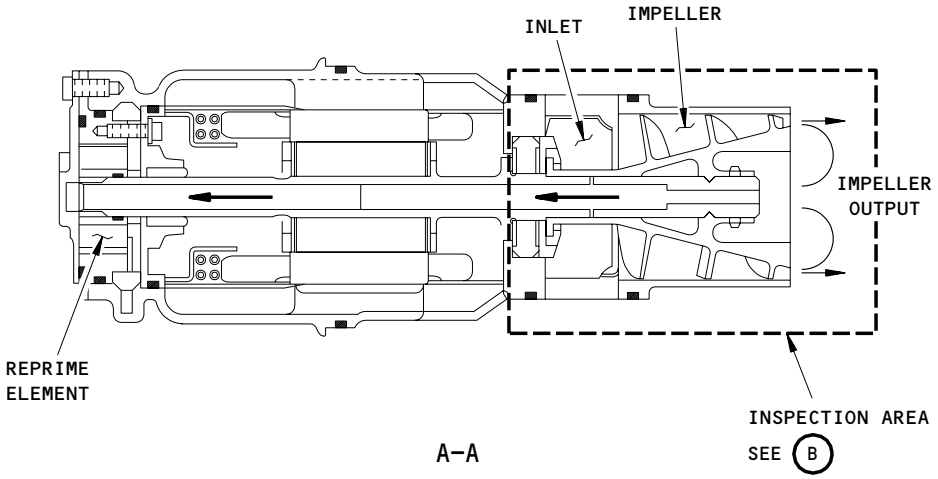

A-A

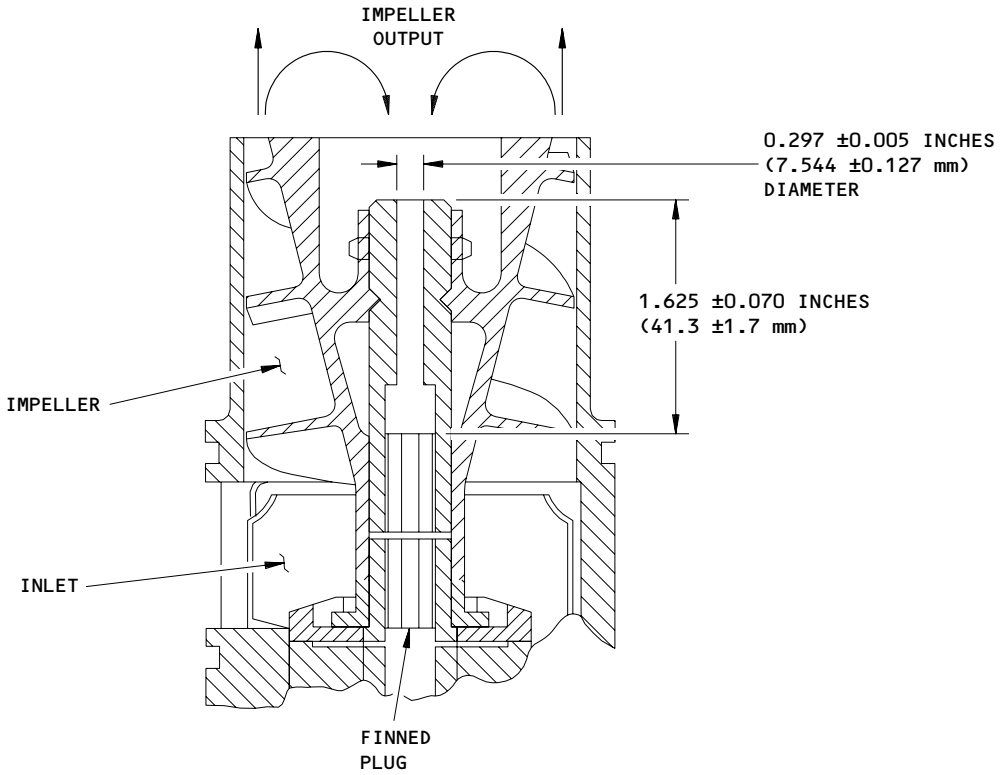

INSPECTION AREA

B

Boost Pump Installation
Figure 601 (Sheet 2)

BOEING PROPRIETARY - Copyright (C) - Unpublished Work - See title page for details.

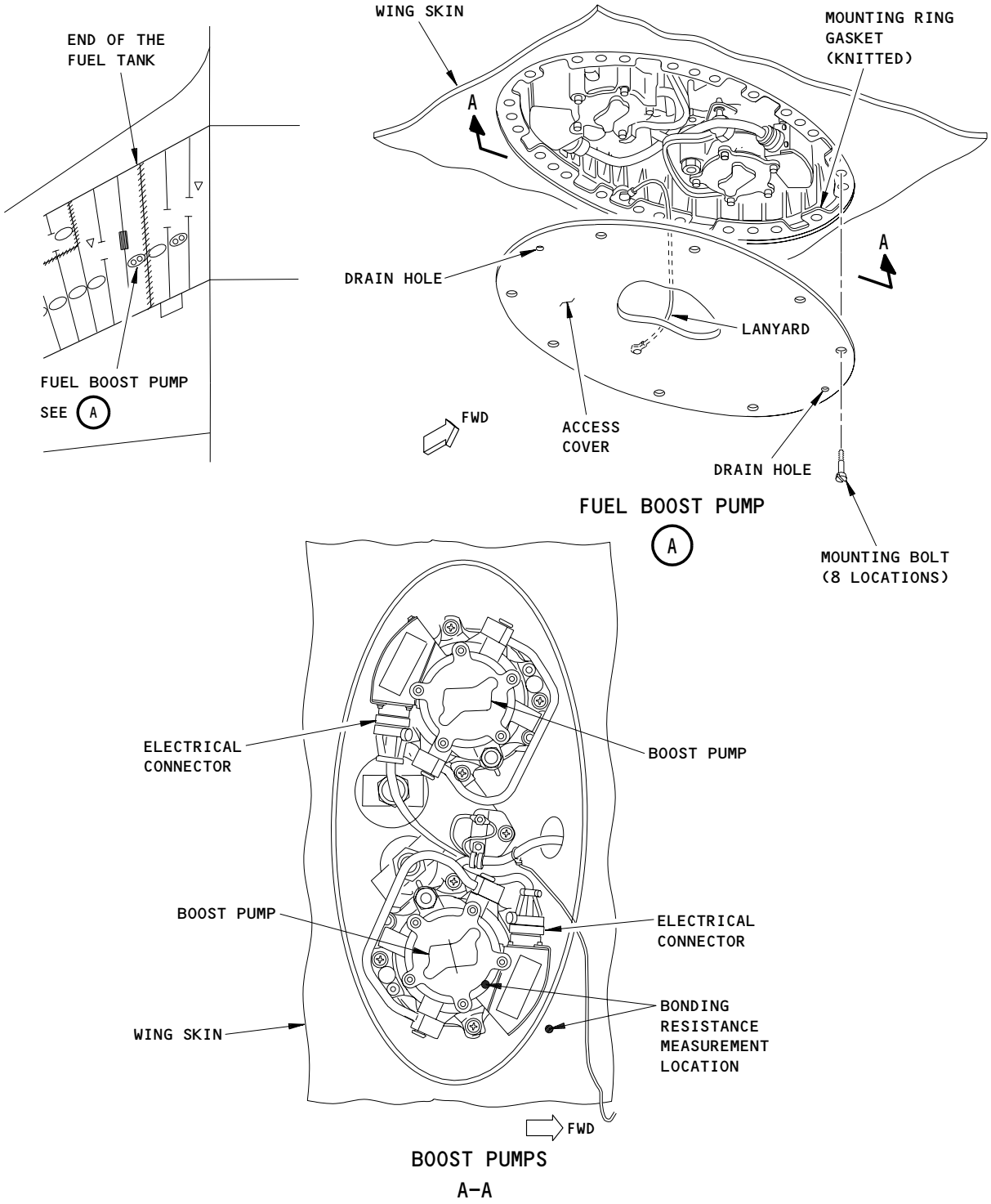

Main Tank Fuel Boost Pump Inspection
Figure 602

BOEING PROPRIETARY - Copyright (C) - Unpublished Work - See title page for details.

TASK 28-22-03-706-013

3. Boost Pump - Bonding Resistance Check (Fig. 602)
   A. References
      (1) SWPM 20-20-00, Electrical Bonding and Grounding
   B. Equipment
      (1) Bonding Meter - Use one of these:
         (a) Bonding Meter - T477W
             Avtron Manufacturing Co.
             Cleveland, OH
         (b) Bonding Meter - Model M1
             (Serial Number A000012 and subsequent)
             BCD Electronics Ltd.
             Vancouver, Canada
   C. Access
      (1) Location Zones
            532 Main Tank - Inboard of Rib No. 10 (Left)
            632 Main Tank - Inboard of Rib No. 10 (Right)

      (2) Access Panels
            532AB Access Cover (Left)
            632AB Access Cover (Right)

   D. Prepare for the Procedure

         S 016-010
      (1) Remove the applicable left or right access cover, 532AB or 632AB.
         (a) Hold the access cover and remove the mounting bolts.

             NOTE: It is not necessary to remove the mounting ring or the gasket.

         (b) Lower the access cover until the lanyard holds the access cover.
   E. Bonding Resistance Check

         S 766-011
      (1) Measure the bonding resistance between each boost pump and the wing structure (SWPM 20-20-00).
         (a) Make sure the resistance is 0.65 milliohm (0.00065 ohm) or less.
   F. Put the Airplane Back to Its Usual Condition

         S 416-012
      (1) Install the applicable left or right access cover, 532AB or 632AB.
         (a) Put and hold the access cover against the lower wing surface.
             1) Make sure the lanyard is in the fuel tank.

BOEING PROPRIETARY - Copyright (C) - Unpublished Work - See title page for details.

(b) Install the mounting bolts on the access cover.

BOEING PROPRIETARY - Copyright (C) - Unpublished Work - See title page for details.

MAIN TANK FUEL BOOST PUMP BYPASS VALVE - REMOVAL/INSTALLATION

1. General
   A. A bypass valve of the fuel boost pump is found at the end of the suction feed line in each main fuel tank, between rib 3 and rib 4.
   B. This procedure contains two tasks. The first task removes the bypass valve of the fuel boost pump. The second task installs the bypass valve of the fuel boost pump.

TASK 28-22-04-004-017

2. Remove the Bypass Valve of the Fuel Boost Pump (Fig. 401)
   A. References
      (1) AMM 28-11-00/201, Fuel Tanks (Purging and Entry)
      (2) AMM 28-11-01/401, Main Tank Access Doors
   B. Access
      (1) Location Zones
          532 Main Tank - Inboard of Rib No. 10 (Left)
          632 Main Tank - Inboard of Rib No. 10 (Right)

      (2) Access Panels
          532BB Main Tank Access Door (Left)
          632BB Main Tank Access Door (Right)

   C. Procedure

      S 654-001
      (1) Drain and purge the applicable left or right main fuel tank (AMM 28-11-00/201).

      S 014-002
      (2) Remove the applicable left or right main tank access door, 532BB or 632BB (AMM 28-11-01/401).

      S 944-018

      WARNING: OBEY THE FUEL TANK ENTRY PRECAUTIONS. FAILURE TO OBEY THE FUEL TANK ENTRY PRECAUTIONS COULD CAUSE INJURY TO PERSONS OR DAMAGE TO EQUIPMENT.

      (3) Obey the fuel tank entry precautions (AMM 28-11-00/201).

      S 034-003
      (4) Remove the coupling that connects the suction feed line to the bypass valve (View A).

      S 034-004
      (5) Disconnect the bonding jumper from the bypass valve.

      S 024-005
      (6) Remove the bolts, nuts, and washers that attach the bypass valve and screen to the mounting bracket.

BOEING PROPRIETARY - Copyright (C) - Unpublished Work - See title page for details.

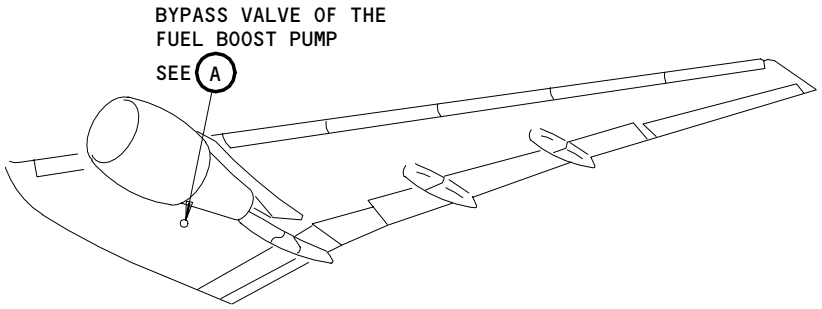

LEFT WING SHOWN (RIGHT WING OPPOSITE)

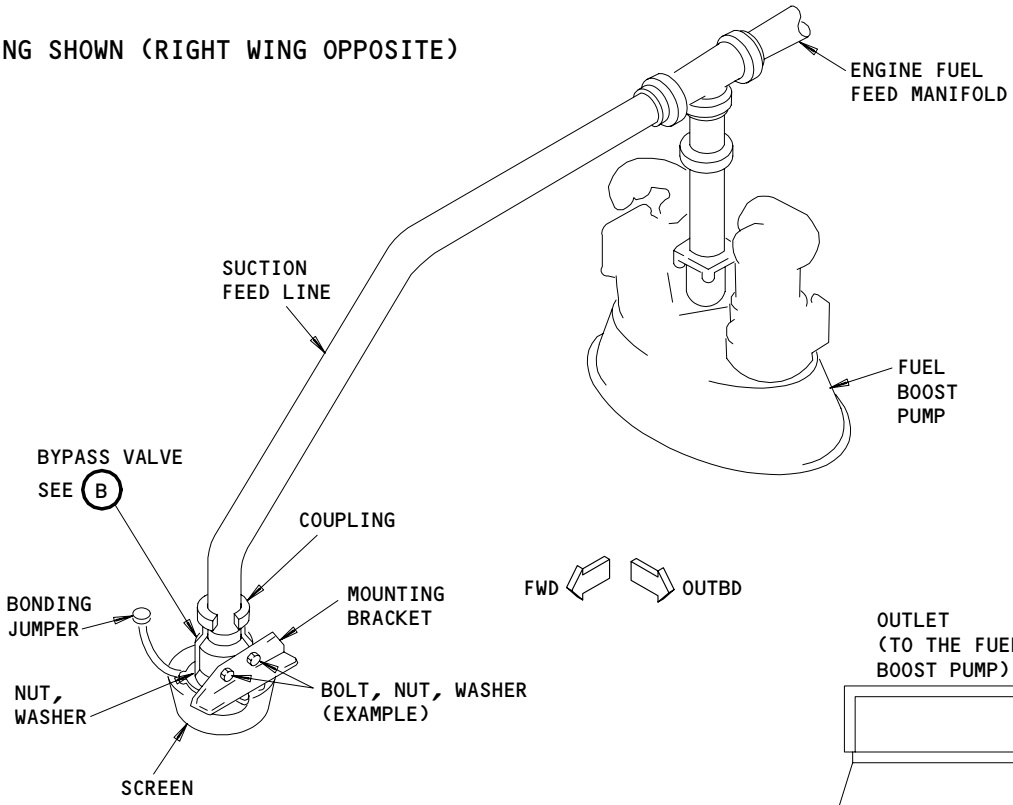

BYPASS VALVE OF THE
FUEL BOOST PUMP

A

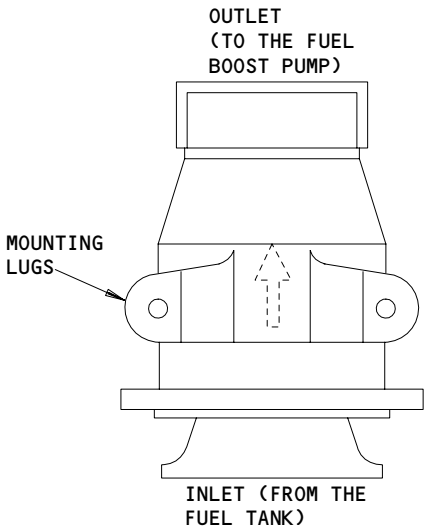

BYPASS VALVE

B

Main Tank Fuel Boost Pump Bypass Valve Installation
Figure 401

BOEING PROPRIETARY - Copyright (C) - Unpublished Work - See title page for details.

S 024-019
(7) Remove the bypass valve and screen from the fuel tank.

S 034-006
(8) Remove the nuts and washers that attach the screen to the bypass valve.

S 024-007
(9) Remove the screen from the bypass valve.

TASK 28-22-04-404-008
3. Install the Bypass Valve of the Fuel Boost Pump (Fig. 401)
A. References
(1) AMM 20-10-21/601, Electrical Bonding
(2) AMM 28-11-00/201, Fuel Tanks (Purging and Entry)
(3) AMM 28-11-01/401, Main Tank Access Doors
B. Access
(1) Location Zones
532 Main Tank - Inboard of Rib No. 10 (Left)
632 Main Tank - Inboard of Rib No. 10 (Right)

(2) Access Panels
532BB Main Tank Access Door (Left)
632BB Main Tank Access Door (Right)

C. Procedure

S 424-009
(1) Put the screen in position on the bypass valve (View A).

S 434-020
(2) Install the washers and nuts to attach the screen to the bypass valve.

S 944-021

WARNING: OBEY THE FUEL TANK ENTRY PRECAUTIONS. FAILURE TO OBEY THE FUEL TANK ENTRY PRECAUTIONS COULD CAUSE INJURY TO PERSONS OR DAMAGE TO EQUIPMENT.

(3) Obey the fuel tank entry precautions (AMM 28-11-00/201).

S 014-022
(4) Go into the fuel tank.

S 424-023
(5) Align the bypass valve on the mounting bracket (View B).

BOEING PROPRIETARY - Copyright (C) - Unpublished Work - See title page for details.

S 424-010
(6) Install the bolts, washers and nuts to attach the bypass valve to the mounting bracket (View A).

S 824-011
(7) Align the suction feed line with the bypass valve.

S 424-024
(8) Use a new O-ring and connect the suction feed line to the bypass valve.

S 434-012
(9) Install lockwire between the coupling and the bolt.

S 434-013
(10) Connect the bonding jumper to the bypass valve.

S 224-014
(11) Make sure the bonding resistance between the bypass valve and the airplane structure is not more than 0.01 ohms (AMM 20-10-21/601).

S 094-015
(12) Remove the purging and ventilating equipment from the fuel tank (AMM 28-11-00/201).

S 414-016
(13) Install the main tank access door, 532BB or 632BB (AMM 28-11-01/401).

BOEING PROPRIETARY - Copyright (C) - Unpublished Work - See title page for details.

CENTER AUXILIARY TANK OVERRIDE PUMP - REMOVAL/INSTALLATION

1. General
   A. The override pump contains a housing, an override pump, a discharge check valve, a motive flow and screen valve assembly, a mounting ring, and access cover.
   B. The housing is installed in the fuel tank. The internal part of the housing is fuel-tight. The override pump, discharge check valve, motive flow and screen valve and shutoff sleeve are installed in the housing.
   C. The housing can be removed and installed with all the parts installed in the housing. It is necessary to defuel the auxiliary fuel tank to do this.
   D. The override pump, motive flow screen and shutoff sleeve can be removed and installed without defueling the auxiliary fuel tank.
   E. This procedure contains 12 tasks. The tasks are:
      (1) Remove the housing of the override pump
      (2) Install the housing of the override pump
      (3) Remove the override pump
      (4) Install the override pump
      (5) Remove the discharge check valve
      (6) Install the discharge check valve.
      (7) Remove the motive flow and screen valve
      (8) Install the motive flow and screen valve
      (9) Remove the motive flow screen
      (10) Install the motive flow screen
      (11) Remove the shutoff sleeve
      (12) Install the shutoff sleeve.

TASK 28-22-05-004-010-001

2. Remove the Housing of the Override Pump
   A. References
      (1) AMM 24-22-00/201, Electrical Power Control
      (2) AMM 28-11-00/201, Fuel Tanks
      (3) AMM 28-11-02/401, Auxiliary Tank Access Doors
      (4) AMM 28-26-00/201, Defueling
   B. Access
      (1) Location Zones
            531 Center Auxiliary Tank (Left)
            631 Center Auxiliary Tank (Right)

      (2) Access Panels
            531AB Access Cover (Left)
            531BB Auxiliary Tank Access Door (Left)
            631AB Access Cover (Right)
            631BB Auxiliary Tank Access Door (Right)

BOEING PROPRIETARY - Copyright (C) - Unpublished Work - See title page for details.

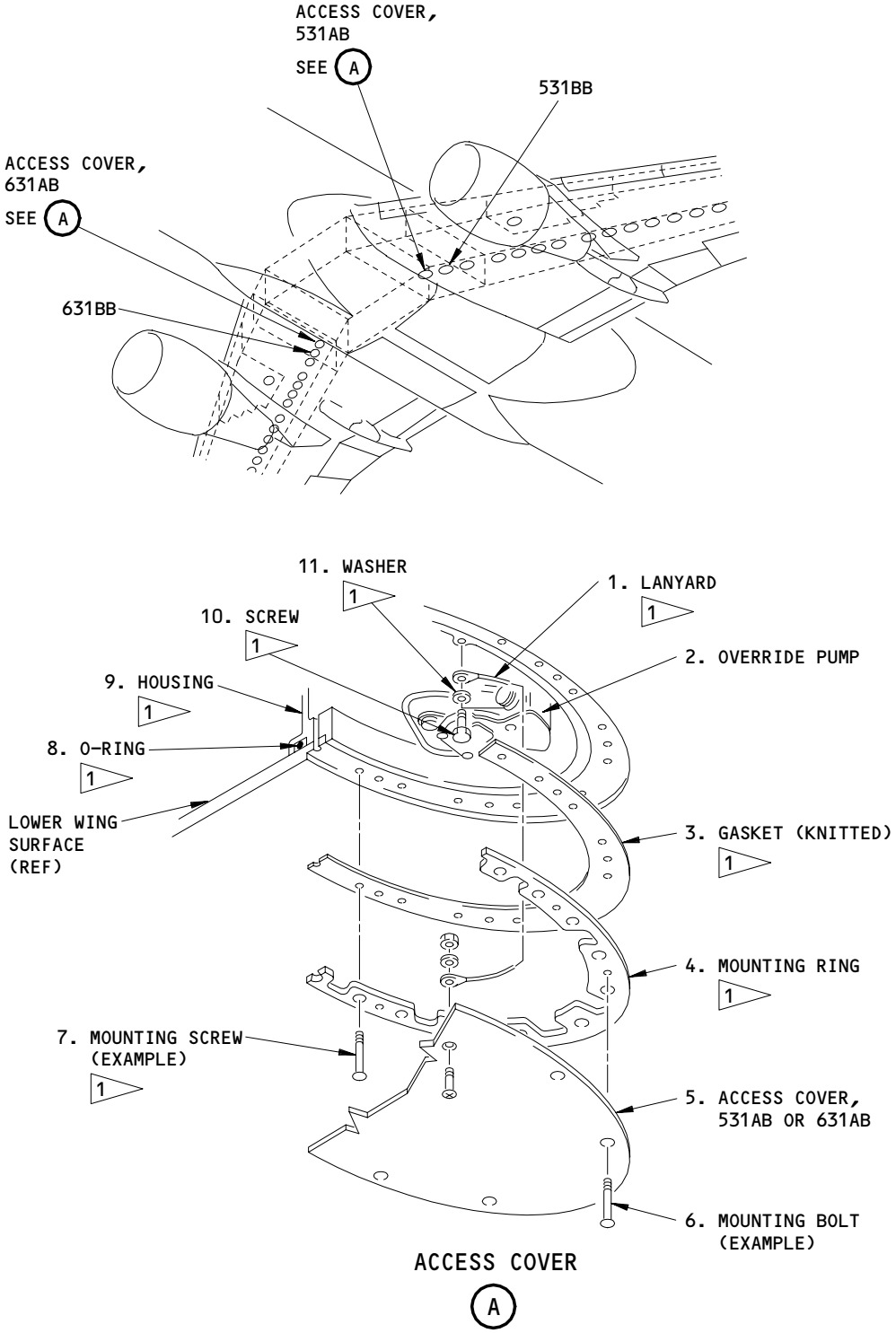

1 THESE COMPONENTS ARE REMOVED ONLY TO REPLACE THE HOUSING. TO REPLACE THE OVERRIDE PUMP, IT IS ONLY NECESSARY TO REMOVE THE ACCESS COVER. REFER TO THE TEXT.

Override Pump Access Cover Installation
Figure 401

BOEING PROPRIETARY - Copyright (C) - Unpublished Work - See title page for details.

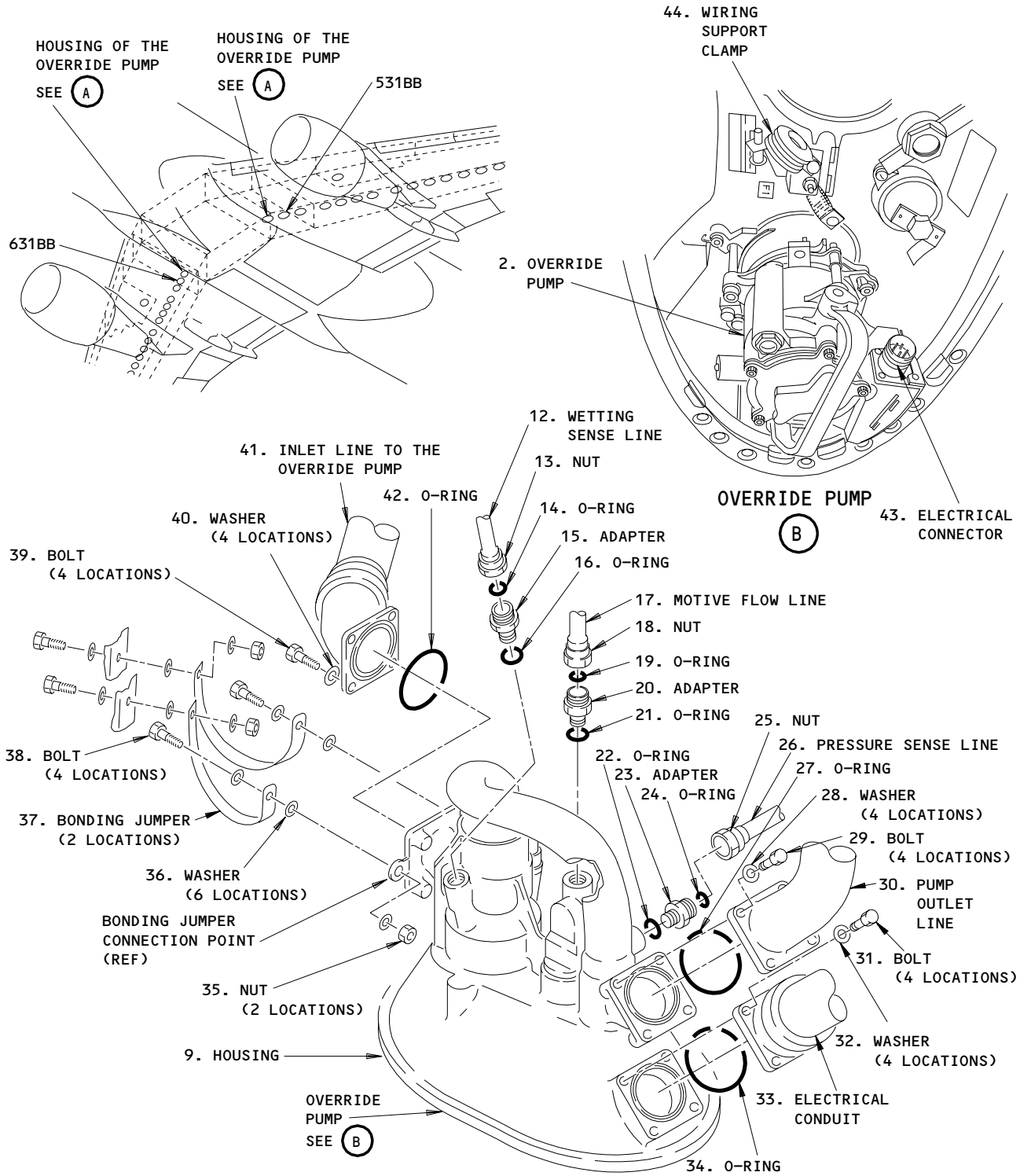

Override Pump Housing Installation
Figure 402

BOEING PROPRIETARY - Copyright (C) - Unpublished Work - See title page for details.

C. Procedure

S 654-012-001
(1) Defuel the auxiliary fuel tank (AMM 28-26-00/201).

NOTE: Defueling the main fuel tank is optional.

S 864-013-001
(2) Remove electrical power (AMM 24-22-00/201)

S 944-014-001

WARNING: FOLLOW THE PURGING AND FUEL TANK ENTRY PROCEDURES. FAILURE TO FOLLOW THE PROCEDURE COULD CAUSE INJURY TO PERSONS OR DAMAGE TO EQUIPMENT.

(3) Do the Purging and Fuel Tank Entry procedure (AMM 28-11-00/201).

S 014-015-001
(4) For the left override pump, remove the left auxiliary tank access door, 531BB (AMM 28-11-02/401).

S 014-016-001
(5) For the right override pump, remove the right auxiliary tank access door, 631BB (AMM 28-11-02/401).

S 014-017-001
(6) Hold the access cover (5) and remove the mounting bolts (6) that attach the access cover (5) to the lower wing surface (View A, Fig. 401).

S 014-018-001
(7) Remove the access cover (5).

S 034-019-001
(8) Remove the screw (10) and washer (11) that attach the lanyard (1) to the housing (9).

S 434-020-001
(9) Install the screw (10) and washer (11) in the housing (9).

S 034-021-001
(10) Remove the mounting screws (7), mounting ring (4), and gasket (3) from the lower wing surface.

S 034-022-001
(11) Disconnect the electrical connector (43) from the override pump (2) (View B, Fig. 402).

BOEING PROPRIETARY - Copyright (C) - Unpublished Work - See title page for details.

S 034-023-001
(12) Disconnect the wiring support clamp (44) from the housing (9).

S 014-024-001
(13) Go into the auxiliary fuel tank (AMM 28-11-00/201).

S 034-025-001
(14) Remove the bolts (31) and washers (32) that attach the electrical conduit (33) to the housing (9) (View A, Fig. 402).

S 034-026-001
(15) Remove the electrical wires from the housing (9).

S 034-027-001
(16) Discard the O-ring (34).

S 034-028-001
(17) Remove the bolts (38) and washers (36) and nuts (35) to disconnect the bonding jumpers (37) from the housing (9).

S 034-029-001
(18) Remove the bolts (39) and washers (40) at the inlet line to the override pump (41) to disconnect it from the housing (9).

S 034-030-001
(19) Discard the O-ring (42).

S 034-031-001
(20) Remove the bolts (29) and washers (28) to disconnect the pump outlet line (30) from the housing (9).

S 034-032-001
(21) Discard the O-ring (27).

S 034-033-001
(22) Remove the nut (18) and adapter (20) to disconnect the motive flow line (17) from the housing (9).

S 034-034-001
(23) Discard the O-rings (19, 21).

S 034-035-001
(24) Remove the nut (13) and adapter (15) to disconnect the wetting sense line (12) from the housing (9).

S 034-036-001
(25) Discard the O-rings (14, 16).

BOEING PROPRIETARY - Copyright (C) - Unpublished Work - See title page for details.

S 034-037-001
(26) Remove the nut (25) and adapter (23) to disconnect the pressure sense line (26) from the housing (9).

S 034-038-001
(27) Discard the O-rings (22, 24).

S 024-039-001
(28) Remove the housing (9) from the auxiliary fuel tank.

TASK 28-22-05-404-040-001

3. Install the Housing of the Override Pump

A. Consumable Materials
(1) A00767 Sealant - Integral Fuel Tank BMS 5-45

B. Parts

AMM			AIPC		
FIG	ITEM	NOMENCLATURE	SUBJECT	FIG	ITEM
402	9	Housing of the Override Pump	28-22-05	01	52, 53
	14	O-ring (Packing)	28-11-51	01	750
	16	O-ring (Packing)			730
	19	O-ring (Packing)	28-22-07	10	680
	21	O-ring (Packing)			685
	22	O-ring (Packing)	28-22-07	07	615,620, 625
	24	O-ring (Packing)			630, 635
	27	O-ring (Packing)			655
	34	O-ring (Packing)			665, 680
	42	O-ring (Packing)			655, 670
401	3	Gasket (Knitted)	28-22-05	01	250
	8	O-ring (Packing)	28-22-05	01	54A

C. References
(1) AMM 06-44-00/201, Wings Access Doors and Panels
(2) AMM 12-11-01/301, Fuel Tank Pressure Fueling
(3) AMM 20-10-21/601, Electrical Bonding
(4) AMM 24-22-00/201, Electrical Power Control
(5) AMM 28-11-00/201, Fuel Tanks
(6) AMM 28-11-02/401, Auxiliary Tank Access Doors

BOEING PROPRIETARY - Copyright (C) - Unpublished Work - See title page for details.

(7) AMM 28-22-00/501, Engine Fuel Feed System
(8) AMM 51-31-01/201, Seals and Sealing

D. Access

(1) Location Zones

531 Center Auxiliary Tank (Left)
631 Center Auxiliary Tank (Right)

(2) Access Panels

531AB Access Cover (Left)
531BB Auxiliary Tank Access Door (Left)
631AB Access Cover (Right)
631BB Auxiliary Tank Access Door (Right)

E. Procedure

S 944-041-001

WARNING: OBEY THE PURGING AND FUEL TANK ENTRY PRECAUTIONS. FAILURE TO OBEY THE PRECAUTIONS COULD CAUSE INJURY TO PERSONS OR DAMAGE TO EQUIPMENT.

(1) Obey the purging and fuel tank entry precautions (AMM 28-11-00/201).

S 214-042-001

(2) Make sure the seal surfaces on the housing (9) and the lower wing surface are clean (View A, Fig. 401).

S 014-043-001

(3) Go into the auxiliary fuel tank.

S 424-044-001

(4) With a new O-ring (8), put the housing (9) on the opening in the lower wing surface.

S 434-045-001

(5) From out of the fuel tank, install a new gasket (3), mounting ring (4) and mounting screws (7) but do not tighten the mounting screws (7).

S 394-046-001

(6) Apply the sealant around the bottom of the housing (9) (AMM 51-31-01/201).

BOEING PROPRIETARY - Copyright (C) - Unpublished Work - See title page for details.

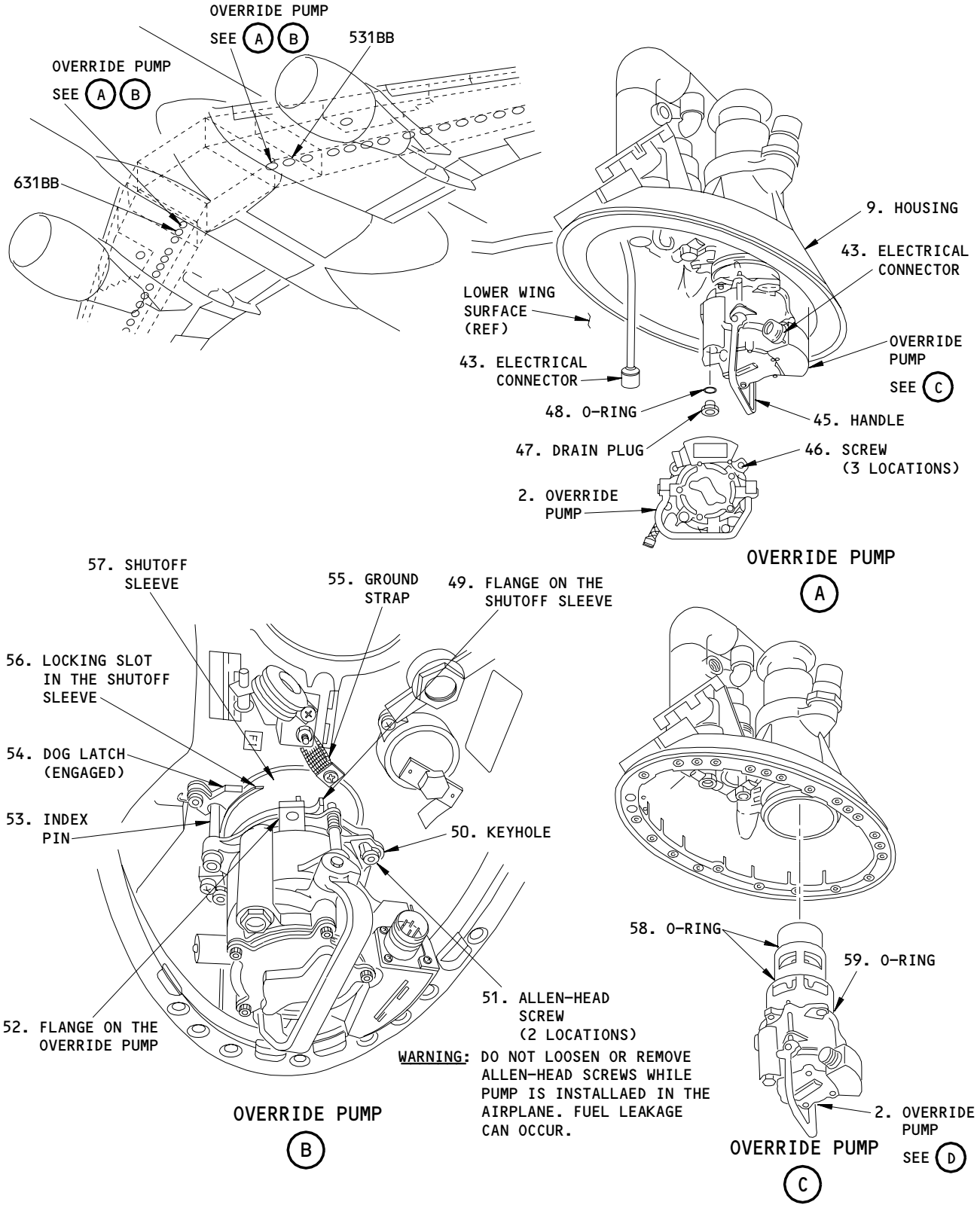

Override Pump Installation
Figure 403 (Sheet 1)

BOEING PROPRIETARY - Copyright (C) - Unpublished Work - See title page for details.

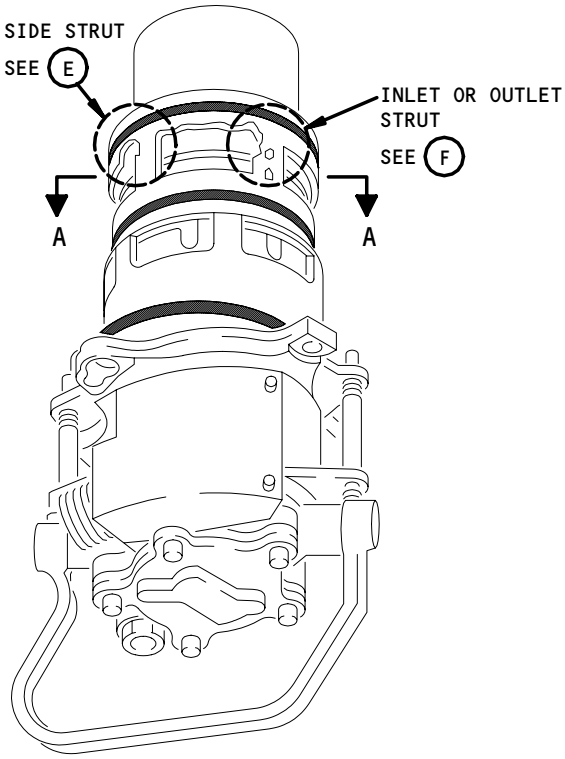

OVERRIDE PUMP

D

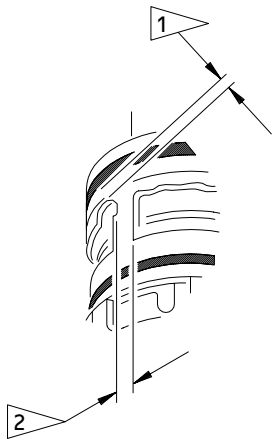

SIDE STRUT

E

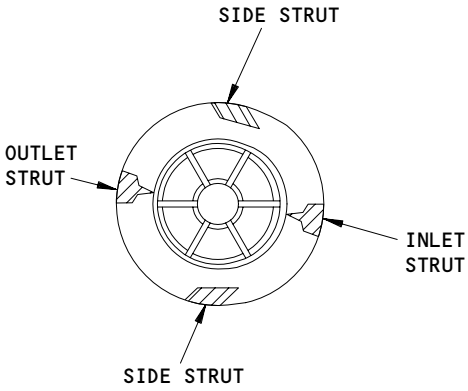

A–A

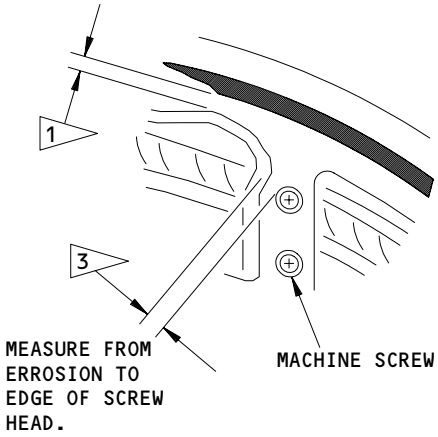

INLET OR OUTLET STRUT

F

1 REPLACE THE PUMP IF LESS THAN 0.04 INCH. (ALL STRUTS)

2 REPLACE THE PUMP IF LESS THAN 0.170 INCH. (SIDE STRUTS)

3 REPLACE THE PUMP IF LESS THAN 0.04 INCH. (INLET AND OUTLET STRUTS)

Override Pump Installation
Figure 403 (Sheet 2)

BOEING PROPRIETARY - Copyright (C) - Unpublished Work - See title page for details.

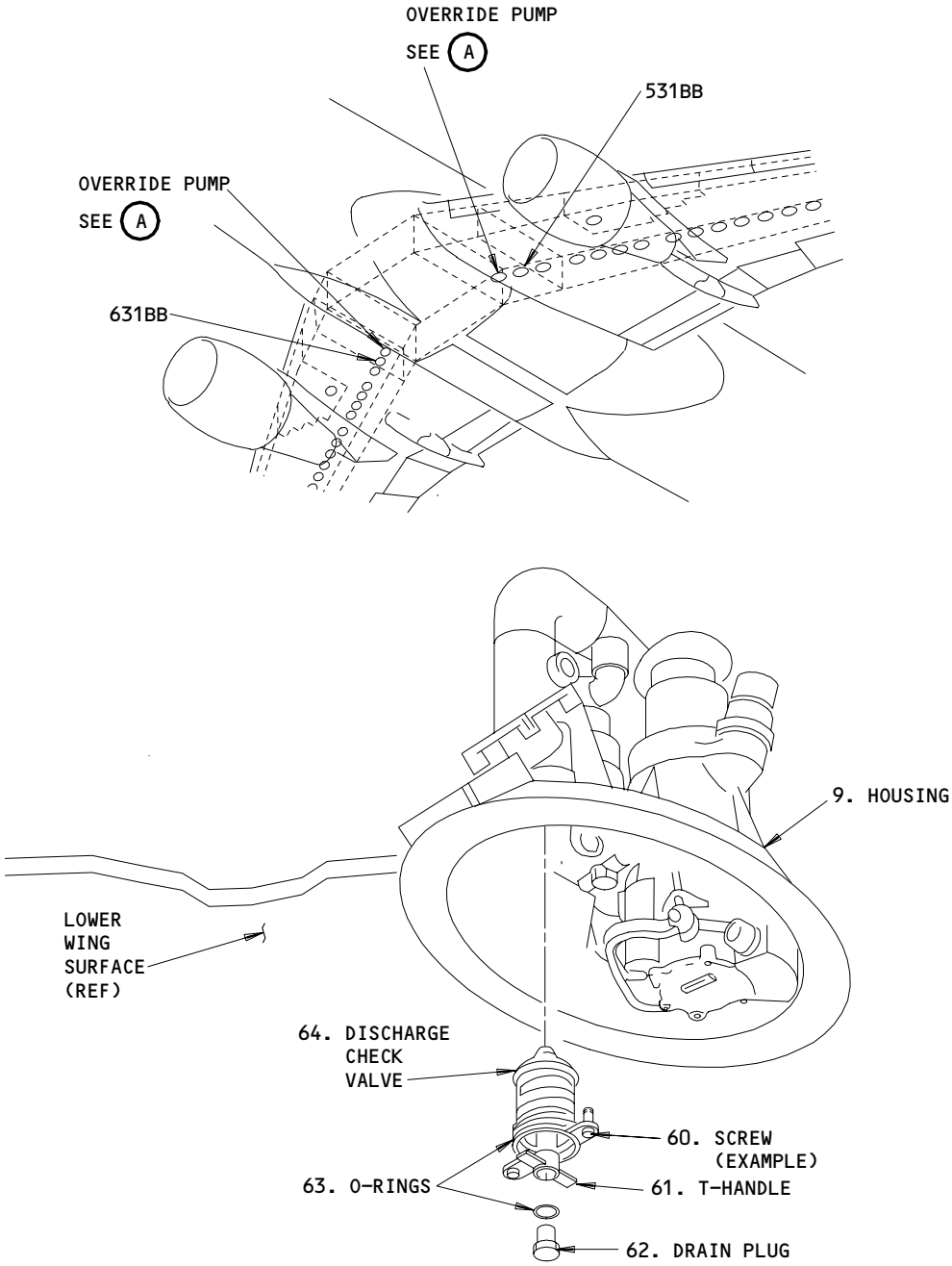

OVERRIDE PUMP

A

Discharge Check Valve Installation
Figure 404

BOEING PROPRIETARY - Copyright (C) - Unpublished Work - See title page for details.

S 014-047-001
(7) Go into the auxiliary fuel tank.

S 434-048-001
(8) Install the O-ring (42), four washers (40) and four bolts (39) to connect the inlet line of the override pump (41) to the housing (9) (View A, Fig. 402).

S 434-049-001
(9) Install the O-ring (27), four washers (28) and four bolts (29) to connect the pump outlet line (30) to the housing (9).

S 434-050-001
(10) Install the O-rings (19, 21), adapter (20) and nut (18) to connect the motive flow line (17) to the housing (9).

S 434-051-001
(11) Install the O-rings (14, 16), adapter (15) and nut (13) to connect the wetting sense line (12) to the housing (9).

S 434-052-001
(12) Install the O-rings (22, 24), adapter (23) and nut (25) to connect the pressure sense line (26) to the housing (9).

S 434-053-001
(13) Install a new O-ring (34) on the electrical conduit (33).

S 434-054-001
(14) Install the electrical wires through the electrical conduit port on the housing (9).

S 434-055-001
(15) Put the electrical conduit (33) on the housing (9).

S 434-056-001
(16) Install the washers (32) and bolts (31) to attach the electrical conduit (33) to the housing (9).

S 434-057-001
(17) Install the bolts (38), washers (36) and nuts (35) to attach the two bonding jumpers (37) at the bonding jumper connection points to the housing (9).

NOTE: CDCCL - Refer to the task: Airworthiness Limitation Precautions (AMM 28-00-00/201), for important information on Critical Design Configuration Control Limitations (CDCCLs).

NOTE: This is applicable to Airworthiness Limitation 28-AWL-07.

BOEING PROPRIETARY - Copyright (C) - Unpublished Work - See title page for details.

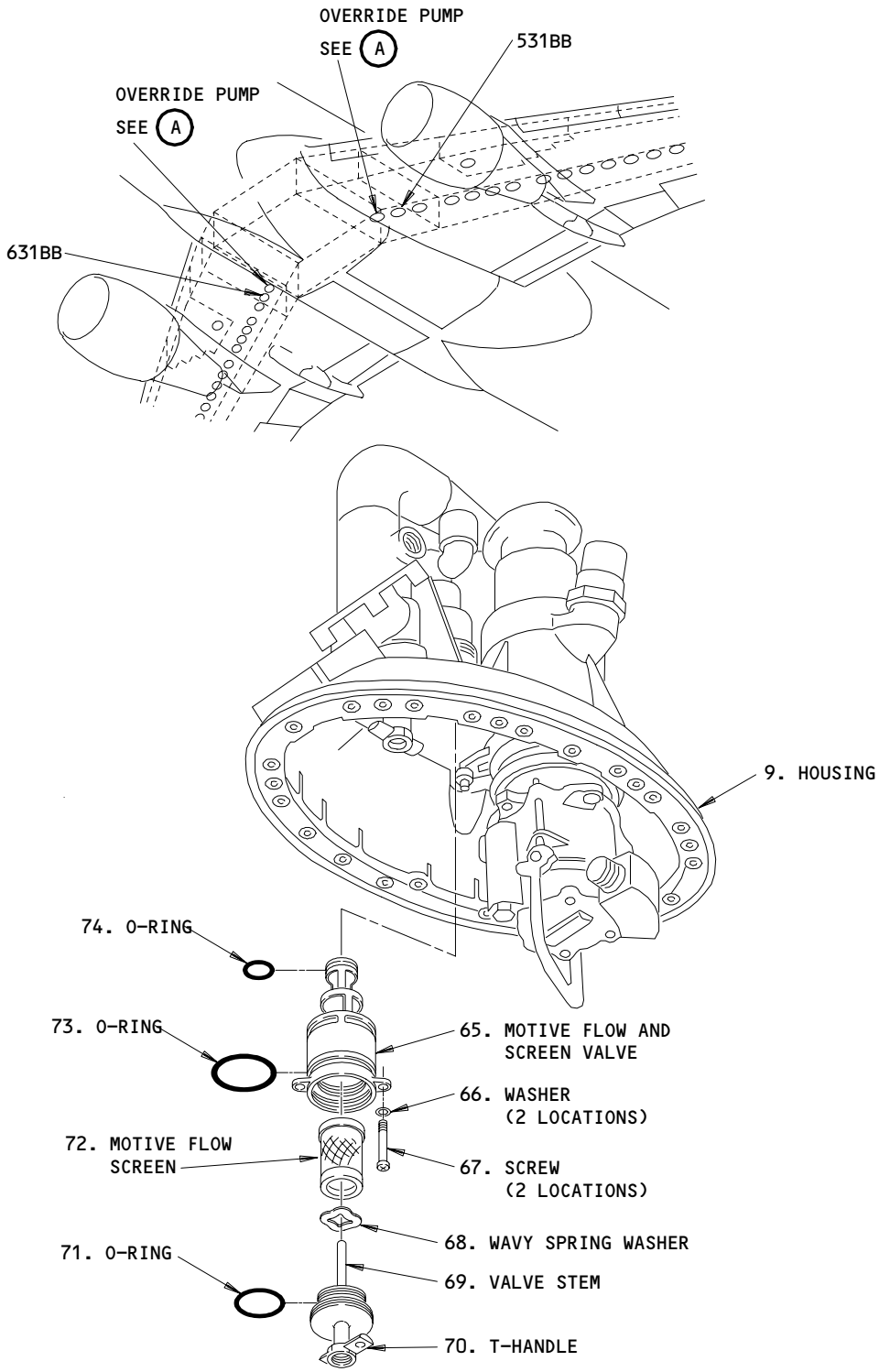

OVERRIDE PUMP
A

Motive Flow and Screen Valve Installation
Figure 405

BOEING PROPRIETARY - Copyright (C) - Unpublished Work - See title page for details.

S 214-058-001

CAUTION: MAKE SURE YOU REMOVE ALL DISCARDED MATERIALS FROM THE FUEL TANK. DISCARDED MATERIALS IN THE FUEL TANK COULD CAUSE A BLOCKAGE OF THE EJECTOR PUMPS AND PREVENT THE SCAVENGE OF WATER.

(18) Make sure you remove all discarded materials from the fuel tank.

S 434-059-001
(19) From out of the fuel tank, tighten all of the mounting screws (7) to 51-56 pound-inches (View A, Fig. 401).

S 434-060-001
(20) Connect the electrical connector (43) to the override pump (2) (View B, Fig. 402).

S 434-061-001
(21) Install the wiring support clamp (44) on the housing (9).

S 224-062-001
(22) Make sure the bonding resistance between the housing (9) and the airplane structure is not more than 0.0002 ohms (AMM 20-10-21/601).

NOTE: CDCCL - Refer to the task: Airworthiness Limitation Precautions (AMM 28-00-00/201), for important information on Critical Design Configuration Control Limitations (CDCCLs) Related to AWL (AMM 28-00-00/201).

NOTE: This is applicable to Airworthiness Limitation 28-AWL-07.

S 034-063-001
(23) Remove the screw (10) and washer (11) that attach to the lanyard (1) from the housing (9) (View A, Fig. 401).

S 414-064-001
(24) With the screw (10) and washer (11), connect the lanyard (1) on the access cover (5) to the housing (9).

S 414-065-001
(25) Hold the access cover (5) on the lower wing surface and install the mounting bolts (6).

S 414-066-001
(26) Tighten the mounting bolts (6) to 20-22 pound-inches.

S 864-067-001
(27) Supply electrical power (AMM 24-22-00/201).

BOEING PROPRIETARY - Copyright (C) - Unpublished Work - See title page for details.

S 654-214-001
(28) Refuel the auxiliary fuel tank to a minimum of 21,700 lbs (9900 kgs) (AMM 12-11-01/301).

NOTE: This is the minimum fuel quantity necessary to make sure the seal surface for the override pump housing is covered and the override pumps are correctly primed with a pitch of 0 degrees and a roll of 0 degrees.

You can refuel each fuel tank by pressure fueling (AMM 12-11-01/301) or by tank to tank transfer (AMM 28-26-00/201).

S 214-069-001
(29) Make sure there are no fuel leaks.

S 714-070-001
(30) Do the operational test for the applicable left or right override pump (AMM 28-22-00/501).

TASK 28-22-05-004-071-001

4. Remove the Override Pump

A. Equipment

(1) 1 U.S. Gallon Capacity Container - for use with jet fuel

B. Access

(1) Location Zones

531 Center Auxiliary Tank (Left)
631 Center Auxiliary Tank (Right)

(2) Access Panels

531AB Access Cover (Left)
631AB Access Cover (Right)

C. Procedure

S 864-072-001
(1) For the left override pump, open this circuit breaker on the main power distribution panel, P6, and attach a DO-NOT-CLOSE tag:
(a) 6F15, L FUEL OVRD PUMP

S 864-073-001
(2) For the right override pump, open this circuit breaker on the main power distribution panel, P6, and attach a DO-NOT-CLOSE tag:
(a) 6F21, R FUEL OVRD PUMP

S 014-074-001
(3) Hold the access cover (5) and remove the mounting bolts (6) (View A, Fig. 401).

BOEING PROPRIETARY - Copyright (C) - Unpublished Work - See title page for details.

S 014-075-001

(4) Lower the access cover (5) until the lanyard (1) holds the access cover (5).

NOTE: It is not necessary to remove the mounting ring or the gasket.

S 034-076-001

(5) Disconnect the electrical connector (43) from the override pump (2) (View A, Fig. 403).

S 034-077-001

(6) Loosen the drain plug (47), but do not remove it.

S 034-078-001

(7) Remove the screw (46) that holds the ground strap (55) to the override pump (2).

NOTE: The screw (46) is attached to the ground strap (55).

S 034-079-001

(8) Remove the other two screws (46) that attach to the override pump (2).

NOTE: The screws (46) are attached to the override pump (2).

S 034-305-001

WARNING: DO NOT LOOSEN OR REMOVE ALLEN-HEAD SCREWS (51) WHILE THE OVERRIDE PUMP (2) IS INSTALLED ON THE AIRPLANE. LOOSENING OR REMOVING THESE SCREWS WILL CAUSE THE OVERRIDE PUMP (2) TO SEPARATE FROM THE SHUTOFF SLEEVE (57). FUEL LEAKAGE CAN OCCUR.

WARNING: DO NOT TURN THE OVERRIDE PUMP (2). FUEL LEAKAGE CAN OCCUR IF YOU TURN THE OVERRIDE PUMP (2) WITHOUT THE SHUTOFF SLEEVE (57) ATTACHED.

(9) Turn the handle (45) on the override pump (2) down 90 degrees.

BOEING PROPRIETARY - Copyright (C) - Unpublished Work - See title page for details.

S 024-081-001

(10) Use the handle (45) to pull the override pump (2) and the shutoff sleeve (57) down until the valve stop (75) stops the movement (approximately 1.5 inches).

NOTE: Increased force is necessary for the last 1/4 inch of movement.

S 214-082-001

(11) Make sure the dog latch (54) and the locking slot in the shutoff sleeve (56) align (View B, Fig. 403).

S 034-083-001

CAUTION: DO NOT LET THE OVERRIDE PUMP (2) TURN WHEN YOU REMOVE THE DRAIN PLUG (47). IF THE OVERRIDE PUMP (2) TURNS, DAMAGE TO THE OVERRIDE PUMP (2) AND THE DRAIN PLUG (47) COULD OCCUR.

CAUTION: MAKE SURE FUEL DOES NOT CONTINUOUSLY DRAIN. IF FUEL CONTINUOUSLY DRAINS, THE SHUTOFF SLEEVE (57) IS NOT CLOSED AND YOU MUST PUSH THE OVERRIDE PUMP (2) UP TO REINSTALL IT AND DEFUEL THE FUEL TANK.

(12) Hold the override pump (2) and remove the drain plug (47) and the O-ring (48) from the override pump (2) (View A, Fig. 403).

S 034-317-001

(13) If fuel continuously drains, do the steps that follow:
(a) Install the override pump (2).
(b) Defuel the auxiliary fuel tank (AMM 28-26-00/201).
(c) Remove the override pump (2).

S 654-084-001

(14) Drain all the remaining fuel in the override pump (2) into a container.

S 214-085-001

WARNING: MAKE SURE THE DOG LATCH (54) ON THE HOUSING (9) ALIGNS WITH THE LOCKING SLOT IN THE SHUTOFF SLEEVE (56). FUEL LEAKAGE CAN OCCUR IF YOU TURN THE OVERRIDE PUMP (2) WITHOUT THE SHUTOFF SLEEVE (57) ATTACHED.

(15) Make sure the dog latch (54) and the locking slot in the shutoff sleeve (56) align (View B, Fig. 403).

BOEING PROPRIETARY - Copyright (C) - Unpublished Work - See title page for details.

S 024-086-001
(16) Turn the override pump (2) approximately 12 degrees counterclockwise until it stops.

NOTE: This releases the override pump (2) from the shutoff sleeve (57).

S 824-087-001
(17) Make sure the dog latch (54) on the housing (2) engages with the locking slot in the shutoff sleeve (56).
(a) If the dog latch (54) does not engage with the locking slot (56), do the steps that follow:
1) Make sure the override pump (2) and the flange on the shutoff sleeve (49) touch.
2) Turn the override pump (2) in the clockwise direction.
3) Pull the override pump (2) down until the dog latch (54) and the locking slot (56) align.
4) Turn the override pump (2) approximately 12 degrees counterclockwise until it stops.

NOTE: This releases the override pump (2) from the shutoff sleeve (57).

5) Make sure the dog latch (54) on the override pump (2) engages with the locking slot (56).

S 024-272-001
(18) Pull down on the handle (45) and remove the override pump (2) from the shutoff sleeve (57) (View C, Fig. 403).

NOTE: A small quantity of fuel could drain from the override pump (2) you removed.

S 034-089-001
(19) Remove the O-rings (58, 59) on the override pump (2).

S 224-285-001
(20) Examine the struts on the override pump (Fig. 403).
(a) If one or more of the struts is less than the dimension shown, replace the boost pump.

S 434-090-001
(21) Install the drain plug (47) into the override pump (2) if you do not install that override pump (2).

BOEING PROPRIETARY - Copyright (C) - Unpublished Work - See title page for details.

TASK 28-22-05-404-091-001

5. Install the Override Pump

A. Consumable Materials
(1) D00215 Fluorosilicone Grease, DC FS-1292

B. Parts

AMM			AIPC		
FIG	ITEM	NOMENCLATURE	SUBJECT	FIG	ITEM
403	2	Override Pump (Pumping Unit)	28-22-05	01	10
	48	O-ring (Packing)			30
	58	O-ring (Packing)			40
	59	O-ring (Packing)			45

C. Access
(1) Location Zones
531 Center Auxiliary Tank (Left)
631 Center Auxiliary Tank (Right)

(2) Access Panels
531AB Access Cover (Left)
631AB Access Cover (Right)

D. Procedure

S 284-206-001

WARNING: DO NOT INSTALL THE PUMP IF THE DIFFUSER ASSEMBLY IS LOOSE. A LOOSE DIFFUSER CAN MAKE SPARKS DURING DRY OPERATION OF THE PUMP. AN EXPLOSION CAN OCCUR.

(1) FOR AIRPLANES WITHOUT PRR B12778-2, OR PRE-SB 28-62;
Do these steps to do an inspection of the override pump (Fig. 407):
(a) Apply hand pressure to the inlet diffuser blades to make sure the diffuser assembly is tightly installed.
(b) Look at the screws and the diffuser assembly while you apply hand pressure to see if they move from their correct position.
(c) If the diffuser or the screws move when you apply hand pressure, do not install the pump.

BOEING PROPRIETARY - Copyright (C) - Unpublished Work - See title page for details.

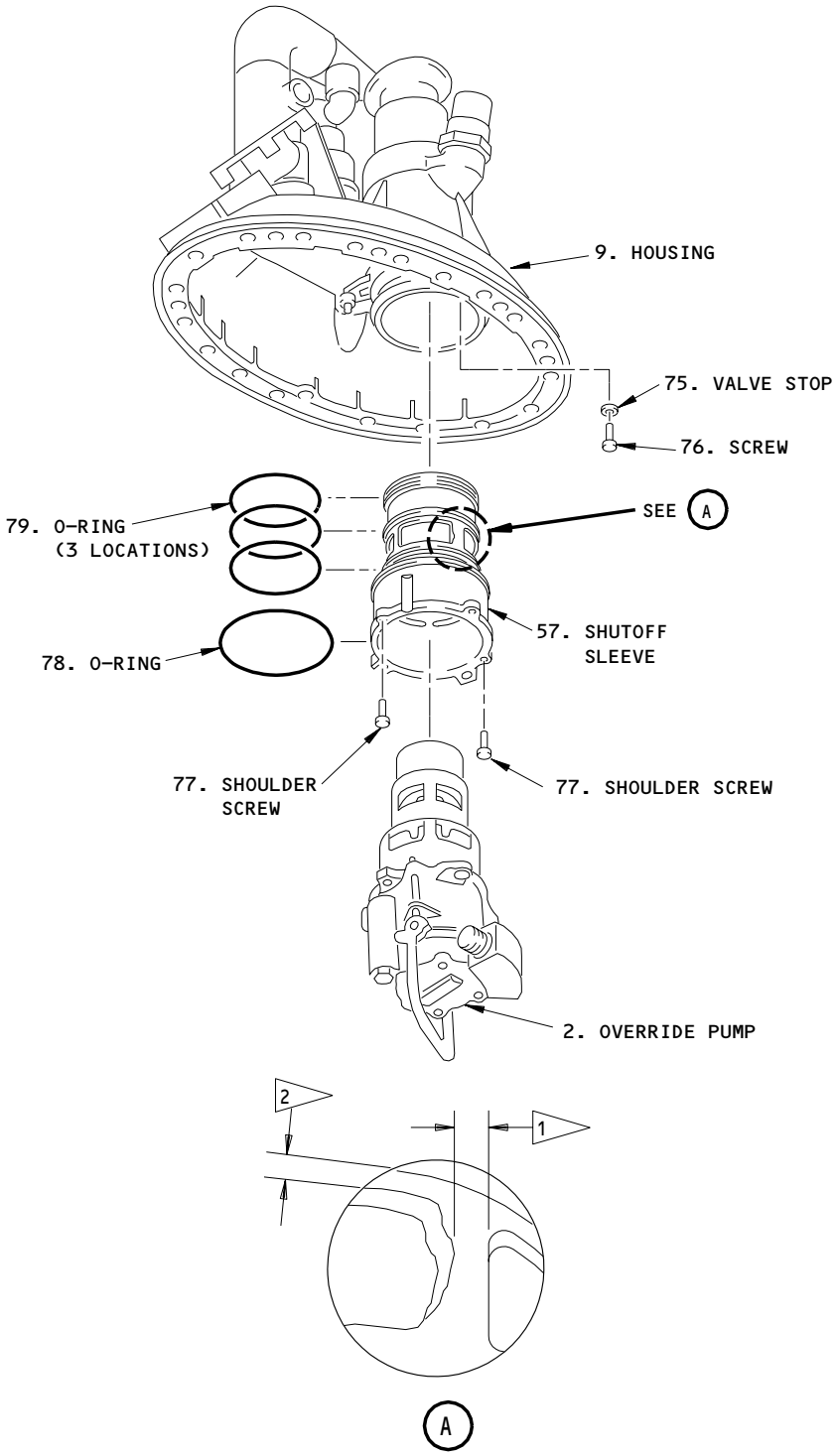

1 REPLACE THE SHUTOFF SLEEVE
IF LESS THAN 0.170 INCH (4.318 MILLIMETERS)

2 REPLACE THE SHUTOFF SLEEVE
IF LESS THAN 0.040 INCH (1.016 MILLIMETERS)

Shutoff Sleeve Installation
Figure 406

BOEING PROPRIETARY - Copyright (C) - Unpublished Work - See title page for details.

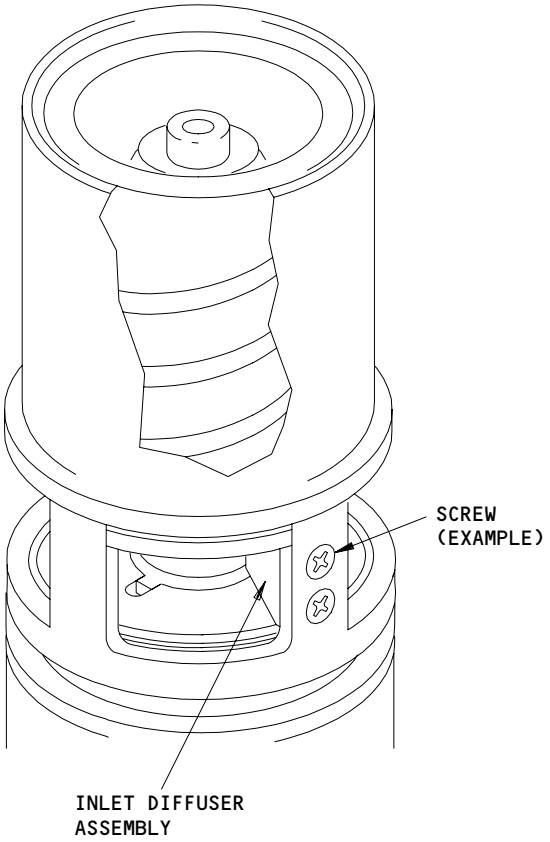

Inlet Diffuser Assembly
Figure 407

BOEING PROPRIETARY - Copyright (C) - Unpublished Work - See title page for details.

S 434-092-001
(2) If you install the override pump (2) that was removed, do the steps that follow:
(a) Install three new O-rings (58, 59), lightly lubricated with fluorosilicone grease, DC FS-1292, on the override pump (2) (View C, Fig. 403).
(b) Install a new O-ring (48), lightly lubricated with fluorosilicone grease, DC FS-1292, on the drain plug (47).

S 434-093-001
(3) Install the drain plug (47) on the override pump (2) (View A, Fig. 403).

S 434-094-001
(4) Tighten the drain plug (47) to 30-40 pound-inches.

S 434-095-001
(5) Install the lockwire on the drain plug (47).

S 644-096-001
(6) Lubricate the O-rings (58, 59) on the outer diameter of the override pump (2) with fluorosilicone grease, DC FS-1292.

NOTE: The fluorosilicone grease, DC FS-1292, makes it easier to install the override pump (2).

S 824-097-001
(7) Align the keyhole (50) on the override pump (2) with the Allen-head screws (51) (View B, Fig. 403).

S 424-098-001
(8) Install the override pump (2) in the shutoff sleeve (57).
(a) Do not turn the override pump (2) while you push the override pump (2) up.
(b) Push the override pump (2) up until the flange on the override pump (52) and the flange on the shutoff sleeve (49) touch.

S 214-099-001
(9) Make sure the Allen-head screws (51) go through the keyholes (50).

S 424-100-001
(10) Turn the override pump (2) approximately 12 degrees in the clockwise direction.

BOEING PROPRIETARY - Copyright (C) - Unpublished Work - See title page for details.

S 434-101-001
(11) Put the handle (45) on the override pump (2) to its usual position.

S 424-102-001
(12) Push the override pump (2) and shutoff sleeve (57) up until the flange on the shutoff sleeve (49) touches the housing (9).

NOTE: Do not turn the override pump (2).

S 434-103-001
(13) Install the screw (46) that attaches the ground strap (55) to the override pump (2).

S 434-104-001
(14) Install the screws (46) to attach the override pump (2) to the shutoff sleeve (57).

S 434-105-001
(15) Tighten the screws (46) to 48-53 pound-inches.

S 224-318-001
(16) Make sure the bonding resistance between the housing (9) and the override pump (2) is 0.00035 ohm (0.35 milliohm) or less (AMM 20-10-21/601).

NOTE: CDCCL - Refer to the task: Airworthiness Limitation Precautions (AMM 28-00-00/201), for important information on Critical Design Configuration Control Limitations (CDCCLs).

NOTE: This is applicable to Airworthiness Limitation 28-AWL-07.

S 434-106-001
(17) Connect the electrical connector (43) to the override pump (2).

S 284-107-001
(18) Make sure there is sufficient fuel in the fuel tank such that fuel is above the housing (9).

BOEING PROPRIETARY - Copyright (C) - Unpublished Work - See title page for details.

S 654-233-001
(19) Refuel the auxiliary fuel tank to a minimum of 21,700 lbs (9900 kgs) (AMM 12-11-01/301).

NOTE: This is the minimum fuel quantity necessary to make sure the seal surface for the override pump housing is covered and the override pumps are correctly primed with a pitch of 0 degrees and a roll of 0 degrees.

You can refuel each fuel tank by pressure fueling (AMM 12-11-01/301) or by tank to tank transfer (AMM 28-26-00/201).

S 214-011-001
(20) Make sure there are no fuel leaks at the override pump (2).

S 414-108-001
(21) Put and hold the access cover (5) against the lower wing surface (View A, Fig. 401).
(a) Make sure the lanyard (1) is in the fuel tank.

S 414-109-001
(22) Install the mounting bolts (6) on the access cover (5).

S 414-110-001
(23) Tighten the mounting bolts (6) to 20-22 pound-inches.

S 864-111-001
(24) For the left override pump, remove the DO-NOT-CLOSE tag and close this circuit breaker on the P6 panel:
(a) 6F15, L FUEL OVRD PUMP

S 864-112-001
(25) For the right override pump, remove the DO-NOT-CLOSE tag and close this circuit breaker on the P6 panel:
(a) 6F21, R FUEL OVRD PUMP

S 714-113-001
(26) Do the operational test for the applicable left or right override pump (AMM 28-22-00/501).

TASK 28-22-05-004-114-001
6. Remove the Discharge Check Valve
A. Equipment
(1) Container - for use with jet fuel, 1 gallon capacity, commercially available
B. References
(1) AMM 12-11-03/301, Fuel Sump Draining
(2) AMM 28-26-00/201, Defueling

BOEING PROPRIETARY - Copyright (C) - Unpublished Work - See title page for details.

C. Access
(1) Location Zones
531 Center Auxiliary Tank (Left)
631 Center Auxiliary Tank (Right)

(2) Access Panels
531AB Access Cover (Left)
631AB Access Cover (Right)

D. Procedure

S 654-115-001

WARNING: DEFUEL THE APPLICABLE MAIN FUEL TANK. FAILURE TO DEFUEL THE APPLICABLE MAIN FUEL TANK WILL LET FUEL FROM THE MAIN FUEL TANK DRAIN THROUGH THE REMOVED DISCHARGE CHECK VALVE (64).

(1) Defuel the main fuel tank on the same side as the discharge check valve (64) to be removed (AMM 28-26-00/201).

NOTE: Defueling the main fuel tank is optional.

S 654-116-001
(2) Defuel the auxiliary fuel tank (AMM 28-26-00/201).

S 654-117-001
(3) Drain the applicable fuel tank sumps (AMM 12-11-03/301).

S 864-118-001
(4) For the discharge check valve in the left auxiliary fuel tank, open this circuit breaker on the main power distribution panel, P6, and attach a DO-NOT-CLOSE tag:
(a) 6F15, L FUEL OVRD PUMP

S 864-119-001
(5) For the discharge check valve in the right auxiliary fuel tank, open this circuit breaker on the main power distribution panel, P6, and attach a DO-NOT-CLOSE tag:
(a) 6F21, R FUEL OVRD PUMP

S 014-120-001
(6) Hold the access cover (5) and remove the mounting bolts (6) (View A, Fig. 401).

S 014-121-001
(7) Lower the access cover (5) until the lanyard (1) holds the access cover (5).

BOEING PROPRIETARY - Copyright (C) - Unpublished Work - See title page for details.

S 034-122-001
(8) Remove the screws (46) that attach to the override pump (46) (View A, Fig. 403).

S 034-123-001
(9) Remove the wiring support clamp (44) from the housing (9) (View B, Fig. 402).

S 034-124-001

CAUTION: DO NOT TURN THE OVERRIDE PUMP. FUEL LEAKAGE CAN OCCUR IF YOU TURN THE OVERRIDE PUMP (2).

(10) Move the handle (45) on the override pump (2) down 90 degrees but do not turn the override pump (2) (View A, Fig. 403).

S 034-125-001

CAUTION: PULL THE OVERRIDE PUMP (2) DOWN FULLY. FUEL LEAKAGE CAN OCCUR IF YOU DO NOT PULL THE OVERRIDE PUMP (2) DOWN FULLY.

(11) Use the handle (45) and pull the override pump (2) down until it stops but do not turn the override pump (2).

S 034-126-001
(12) Remove the drain plug (62) from the discharge check valve (64) (View A, Fig. 404).

S 654-127-001
(13) Drain all the remaining fuel into a container.

S 034-128-001
(14) Remove the two screws (60) from the discharge check valve (64).

S 024-129-001
(15) Use the T-handle (61) and pull the discharge check valve (64) down to remove it from the housing (9).

S 434-130-001
(16) If you install a new discharge check valve (64), install the drain plug (62) in the discharge check valve (64).

TASK 28-22-05-404-131-001
7. Install the Discharge Check Valve
A. Consumable Materials
(1) D00215 Fluorosilicone Grease, DC FS-1292

BOEING PROPRIETARY - Copyright (C) - Unpublished Work - See title page for details.

B. Parts

AMM		NOMENCLATURE	AIPC		
FIG	ITEM		SUBJECT	FIG	ITEM
404	63	O-ring (Packing)	28-22-05	01	70,72,73
	64	Discharge Check Valve		01	55

C. Access

(1) Location Zones

531 Center Auxiliary Tank (Left)
631 Center Auxiliary Tank (Right)

(2) Access Panels

531AB Access Cover (Left)
631AB Access Cover (Right)

D. Procedure

S 434-132-001

(1) If you install the removed discharge check valve (64), do the steps that follow:
   (a) Lubricate the new O-rings (63) with fluorosilicone grease, DC FS-1292 (View A, Fig. 404).
   (b) Install a new O-ring (63) on the drain plug (62).
   (c) Install new O-rings (63) on the outer diameter of the discharge check valve (64).

S 434-133-001

(2) If the drain plug (62) is not installed, do the steps that follow:
   (a) Install the drain plug (62) into the discharge check valve (64) (View A, Fig. 404).
   (b) Tighten the drain plug (62) to 30-40 pound-inches.
   (c) Install the lockwire on the drain plug (62).

S 424-134-001

(3) Put and hold the discharge check valve (64) in the housing (9) (View A, Fig. 404).

S 434-135-001

(4) Install the two screws (60) in the discharge check valve (64).

S 434-136-001

(5) Tighten the two screws (60) to 20-22 pound-inches.

BOEING PROPRIETARY - Copyright (C) - Unpublished Work - See title page for details.

S 434-137-001
(6) Push the override pump (2) up until it is in the housing (9).

S 434-138-001

CAUTION: DO NOT TURN THE OVERRIDE PUMP (2). FUEL LEAKAGE CAN OCCUR IF YOU TURN THE OVERRIDE PUMP (2).

(7) Move the handle (45) on the override pump (2) up but do not turn the override pump (2) (View A, Fig. 403).

S 434-139-001
(8) Install the screws (46) on the override pump (2).

S 434-140-001
(9) Tighten the screws (46) to 48-53 pound-inches.

S 434-141-001
(10) Install the wiring support clamp (44) to the housing (9) (View B, Fig. 402).

S 654-249-001
(11) Refuel the auxiliary fuel tank to a minimum of 21,700 lbs (9900 kgs) (AMM 12-11-01/301).

NOTE: This is the minimum fuel quantity necessary to make sure the seal surface for the override pump housing is covered and the override pumps are correctly primed with a pitch of 0 degrees and a roll of 0 degrees.

You can refuel each fuel tank by pressure fueling (AMM 12-11-01/301) or by tank to tank transfer (AMM 28-26-00/201).

S 214-143-001
(12) Make sure there are no fuel leaks at the discharge check valve (64) or the override pump (2) (Fig. 404).

S 414-144-001
(13) Put and hold the access cover (5) against the lower wing surface (View A, Fig. 401).
(a) Make sure the lanyard (1) is in the fuel tank.

S 414-145-001
(14) Install the mounting bolts (6) on the access cover (5).

BOEING PROPRIETARY - Copyright (C) - Unpublished Work - See title page for details.

S 414-146-001
(15) Tighten the mounting bolts (6) to 20-22 pound-inches.

S 864-147-001
(16) For the discharge check valve in the left auxiliary fuel tank, remove the DO-NOT-CLOSE tag and close this circuit breaker on the P6 panel:
(a) 6F15, L FUEL OVRD PUMP

S 864-148-001
(17) For the discharge check valve in the right auxiliary fuel tank, remove the DO-NOT-CLOSE tag and close this circuit breaker on the P6 panel:
(a) 6F21, R FUEL OVRD PUMP

S 714-149-001
(18) Do the operational test for the applicable left or right override pump (AMM 28-22-00/501).

TASK 28-22-05-004-150-001

8. Remove the Motive Flow and Screen Valve

A. References
(1) AMM 28-26-00/201, Defueling

B. Access
(1) Location Zones
531 Center Auxiliary Tank (Left)
631 Center Auxiliary Tank (Right)

(2) Access Panels
531AB Access Cover (Left)
631AB Access Cover (Right)

C. Procedure

S 654-151-001
(1) Defuel the auxiliary fuel tank (AMM 28-26-00/201).

S 864-152-001
(2) For the left override pump, open this circuit breaker on the main power distribution panel, P6, and attach a DO-NOT-CLOSE tag:
(a) 6F15, L FUEL OVRD PUMP

S 864-153-001
(3) For the right override pump, open this circuit breaker on the main power distribution panel, P6, and attach a DO-NOT-CLOSE tag:
(a) 6F21, R FUEL OVRD PUMP

S 014-154-001
(4) Hold the access cover (5) and remove the mounting bolts (6) (View A, Fig. 401).

BOEING PROPRIETARY - Copyright (C) - Unpublished Work - See title page for details.

S 014-155-001
(5) Lower the access cover (5) until the lanyard (1) holds the access cover (5).

S 034-156-001
(6) Remove the screws (67) on the motive flow and screen valve (65) (View A, Fig. 405).

S 024-157-001
(7) Use the T-handle (70) and pull the motive flow and screen valve (65) down and out of the housing (9).

S 034-158-001
(8) If you will install the motive flow and screen valve (65) removed, remove the two O-rings (73, 74).

TASK 28-22-05-404-159-001

9. Install the Motive Flow and Screen Valve

A. Consumable Materials
(1) D00215 Fluorosilicone Grease, DC FS-1292

B. Parts

AMM			IPC		
FIG	ITEM	NOMENCLATURE	SUBJECT	FIG	ITEM
405	65	Motive Flow and Screen Valve	28-22-05	01	80
	73	O-ring (Packing)			95
	74	O-ring (Packing)			90

C. References
(1) AMM 12-11-01/301, Fuel Tank Pressure Fueling

D. Access
(1) Location Zones
531 Center Auxiliary Tank (Left)
631 Center Auxiliary Tank (Right)

(2) Access Panels
531AB Access Cover (Left)
631AB Access Cover (Right)

BOEING PROPRIETARY - Copyright (C) - Unpublished Work - See title page for details.

E. Procedure

S 434-160-001
(1) If the motive flow and screen valve (65) you install is not new, do the steps that follow:
(a) Lubricate two new O-rings (73, 74) with fluorosilicone grease, DC FS-1292 (View A, Fig. 405).
(b) Install the O-rings (73, 74) on the motive flow and screen valve (65).

S 644-161-001
(2) Lightly lubricate the O-rings (73, 74) on the motive flow and screen valve (65) with fluorosilicone grease, DC FS-1292 (View A, Fig. 405).

S 424-162-001
(3) Put the motive flow and screen valve (65) in the housing (9).

NOTE: Make sure the motive flow and screen valve (65) is tightly in position.

S 434-163-001
(4) Install the screws (67) and washers (66) to attach the motive flow and screen valve (65) to the housing (9).

S 434-164-001
(5) Tighten the screws (65) to 20-22 pound-inches.

S 654-265-001
(6) Refuel the auxiliary fuel tank to a minimum of 21,700 lbs (9900 kgs) (AMM 12-11-01/301).

NOTE: This is the minimum fuel quantity necessary to make sure the seal surface for the override pump housing is covered and the override pumps are correctly primed with a pitch of 0 degrees and a roll of 0 degrees.

You can refuel each fuel tank by pressure fueling (AMM 12-11-01/301) or by tank to tank transfer (AMM 28-26-00/201).

S 214-166-001
(7) Make sure there are no fuel leaks at the motive flow and screen valve (65).

BOEING PROPRIETARY - Copyright (C) - Unpublished Work - See title page for details.

S 414-167-001
(8) Put and hold the access cover (5) against the lower wing surface (View A, Fig. 401).
(a) Make sure the lanyard (1) is in the fuel tank.

S 414-168-001
(9) Install the mounting bolts (6) on the access cover (5).

S 414-169-001
(10) Tighten the mounting bolts (6) to 20-22 pound-inches.

S 864-170-001
(11) For the left override pump, remove the DO-NOT-CLOSE tag and close this circuit breaker on the P6 panel:
(a) 6F15, L FUEL OVRD PUMP

S 864-171-001
(12) For the right override pump, remove the DO-NOT-CLOSE tag and close this circuit breaker on the P6 panel:
(a) 6F21, R FUEL OVRD PUMP

S 714-172-001
(13) Do the operational test for the applicable left or right override pump (AMM 28-22-00/501).

TASK 28-22-05-004-173-001
10. Remove the Motive Flow Screen
A. Access
(1) Location Zones
531 Center Auxiliary Tank (Left)
631 Center Auxiliary Tank (Right)

(2) Access Panels
531AB Access Cover (Left)
631AB Access Cover (Right)

B. Procedure

S 014-174-001
(1) Hold the access cover (5) and remove the mounting bolts (6) (View A, Fig. 401).

S 014-175-001
(2) Lower the access cover (5) until the lanyard (1) holds the access cover (5).

BOEING PROPRIETARY - Copyright (C) - Unpublished Work - See title page for details.

S 034-176-001

CAUTION: REMOVE ALL OF THE LOCKWIRE FROM THE MOTIVE FLOW AND SCREEN VALVE (65). IF YOU DO NOT REMOVE ALL OF THE LOCKWIRE, THREAD GALLING CAN OCCUR.

(3) Remove the lockwire from the motive flow and screen valve (65) to let the T-handle (70) be removed (View A, Fig. 405).

S 024-177-001

CAUTION: USE ONLY MANUAL PRESSURE ON THE T-HANDLE (70). IF YOU DO NOT USE MANUAL PRESSURE, DAMAGE TO THE VALVE STEM (69) CAN OCCUR.

(4) Remove the T-handle (70) of the motive flow screen (72) from the motive flow and screen valve (65).

NOTE: The valve stem (69) and motive flow screen (72) are attached to the T-handle (70).

S 024-178-001
(5) Remove the motive flow screen (72) from the T-handle (70).

S 034-179-001
(6) Discard the O-ring (71).

S 284-180-001
(7) Make sure you keep the wavy spring washer (68).

TASK 28-22-05-404-181-001
11. Install the Motive Flow Screen
A. Consumable Materials
(1) D00215 Fluorosilicone Grease, DC FS-1292
(2) D50226 Lubricant - Sandstrom 28A Solid Film, MIL-PRF-46147C

BOEING PROPRIETARY - Copyright (C) - Unpublished Work - See title page for details.

B. Parts

AMM		NOMENCLATURE	AIPC		
FIG	ITEM		SUBJECT	FIG	ITEM
405	71 72	O-ring (Packing) Motive Flow Screen	28-22-05	01	105 115

C. Access

(1) Location Zones

531 Center Auxiliary Tank (Left)
631 Center Auxiliary Tank (Right)

(2) Access Panels

531AB Access Cover (Left)
631AB Access Cover (Right)

D. Procedure

S 644-182-001
(1) Apply fluorosilicone grease, DC FS-1292, to the O-ring (71) (View A, Fig. 405).

S 434-183-001
(2) Install the O-ring (71) around the threads of the T-handle (70).

S 644-184-001
(3) Apply the solid film lubricant on the threads of the T-handle (70).

S 424-185-001
(4) Put the wavy spring washer (68) in the T-handle (70), around the valve stem (69).

S 424-186-001
(5) Install the narrow end of the motive flow screen (72) on the T-handle (70), on the valve stem (69).

S 424-187-001
(6) Install the T-handle (70) in the motive flow and screen valve (65).

BOEING PROPRIETARY - Copyright (C) - Unpublished Work - See title page for details.

S 434-188-001
(7) Install the lockwire on the motive flow and screen valve (65).

S 414-189-001
(8) Put and hold the access cover (5) against lower wing surface (Fig. 401).
(a) Make sure the lanyard (1) is in the fuel tank.

S 434-190-001
(9) Install the mounting bolts (6) on the access cover (5).

S 434-191-001
(10) Tighten the mounting bolts (6) to 20-22 pound-inches.

TASK 28-22-05-004-192-001

12. Remove the Shutoff Sleeve

A. Access

(1) Location Zones

531	Center Auxiliary Tank (Left)
631	Center Auxiliary Tank (Right)

(2) Access Panels

531AB	Access Cover (Left)
631AB	Access Cover (Right)

B. Procedure

S 034-193-001
(1) Do the Remove the Override Pump procedure.

S 034-194-001
(2) Remove the shoulder screws (77) from the shutoff sleeve (57) if it is necessary (Fig. 406).

NOTE: Do not discard the shoulder screws (77).

S 034-195-001
(3) Remove the screw (76) and the valve stop (75).

NOTE: Do not discard the screw (76).

S 024-196-001
(4) Remove shutoff sleeve (57) from housing (9).

S 034-197-001
(5) Remove the O-rings (78, 79) from the shutoff sleeve (57) and discard.

BOEING PROPRIETARY - Copyright (C) - Unpublished Work - See title page for details.

S 224-286-001

(6) Look at the struts of the shutoff sleeve (Fig. 406).

(a) If one or more of the struts have less than the dimension shown, replace the shutoff sleeve.

TASK 28-22-05-404-009-001

13. Install the Shutoff Sleeve

A. Consumable Materials

(1) D00215 Fluorosilicone Grease, DC FS-1292

(2) B00415 3M Torque Paint EC1252-White or equivalent.

B. Parts

AMM			AIPC		
FIG	ITEM	NOMENCLATURE	SUBJECT	FIG	ITEM
406	57	Shutoff Sleeve	28-22-05	01	119
	78	O-ring (Packing)			125
	79	O-ring (Packing)			120

C. Access

(1) Location Zones

531 Center Auxiliary Tank (Left)

631 Center Auxiliary Tank (Right)

(2) Access Panels

531AB Access Cover (Left)

631AB Access Cover (Right)

D. Procedure

S 434-008-001

(1) If the shutoff sleeve (57) you install is not new, install four new O-rings (78, 79) on the shutoff sleeve (57).

BOEING PROPRIETARY - Copyright (C) - Unpublished Work - See title page for details.

S 644-007-001
(2) Apply fluorosilicone grease, DC FS-1292, to the O-rings (78, 79).

S 424-004-001
(3) Put and hold the shutoff sleeve (57) in the housing (9).

S 434-006-001
(4) Install the valve stop (75) and the screw (76).

S 434-005-001
(5) Tighten the screw (76) to 20-22 pound-inches.

S 424-003-001

CAUTION: MAKE SURE THE SHOULDER SCREWS (77) ARE INSTALLED ON THE SHUTOFF SLEEVE (57). IF THE SHOULDER SCREWS (77) ARE NOT INSTALLED, FUEL LEAKAGE COULD OCCUR WHEN YOU REMOVE THE OVERRIDE PUMP (2).

(6) Install the shoulder screws (77) on the shutoff sleeve (57) if it is necessary (Fig. 406).

NOTE: The two shoulder screws (77) on the shutoff sleeve (57) are a necessary part of the shutoff sleeve (57). Do not install the shutoff sleeve (57) without the shoulder screws (77).

S 434-002-001
(7) Tighten the shoulder screws (77) to 20-22 pound-inches.

S 644-275-001
(8) Fill the heads of the shoulder screws with 3M torque paint EC1252-White or equivalent.

S 434-001-001
(9) Do the Install the Override Pump procedure.

BOEING PROPRIETARY - Copyright (C) - Unpublished Work - See title page for details.

OVERRIDE/JETTISON PUMP - REMOVAL/INSTALLATION

1. General
   A. The override/jettison pump contains a housing, an override pump, a jettison pump, a discharge check valve, a motive flow and screen valve, a mounting ring and an access cover.
   B. The housing is installed in the fuel tank. The override pump, jettison pump, discharge check valve, motive flow and screen valve and shutoff sleeve are installed in the housing.
   C. The housing can be removed and installed with all the parts installed in the housing. It is necessary to defuel the auxiliary fuel tank to do this.
   D. It is not necessary to go into the auxiliary fuel tank to remove and install the override pump, jettison pump, discharge check valve, motive flow and screen valve and shutoff sleeve.
   E. To remove and install the jettison pump, refer to AMM 28-31-01/401.
   F. This procedure contains 12 tasks. The tasks are:
      (1) Remove the housing of the override/jettison pump
      (2) Install the housing of the override/jettison pump
      (3) Remove the override pump
      (4) Install the override pump
      (5) Remove the discharge check valve
      (6) Install the discharge check valve
      (7) Remove the motive flow and screen valve
      (8) Install the motive flow and screen valve
      (9) Remove the motive flow screen
      (10) Install the motive flow screen
      (11) Remove the shutoff sleeve
      (12) Install the shutoff sleeve

TASK 28-22-05-004-001-002

2. Remove the Housing of the Override/Jettison Pump
   A. References
      (1) AMM 24-22-00/201, Electrical Power Control
      (2) AMM 28-11-00/201, Fuel Tanks (Purging and Entry)
      (3) AMM 28-11-02/401, Auxiliary Tank Access Doors
   B. Access
      (1) Location Zones
            531 Center Auxiliary Tank (Left)
            631 Center Auxiliary Tank (Right)

BOEING PROPRIETARY - Copyright (C) - Unpublished Work - See title page for details.

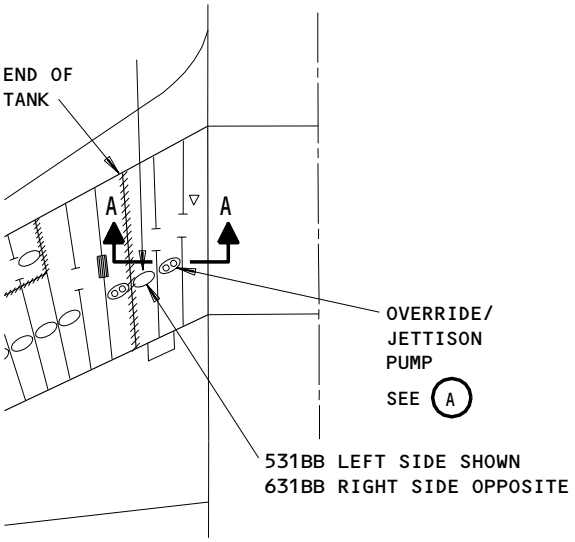

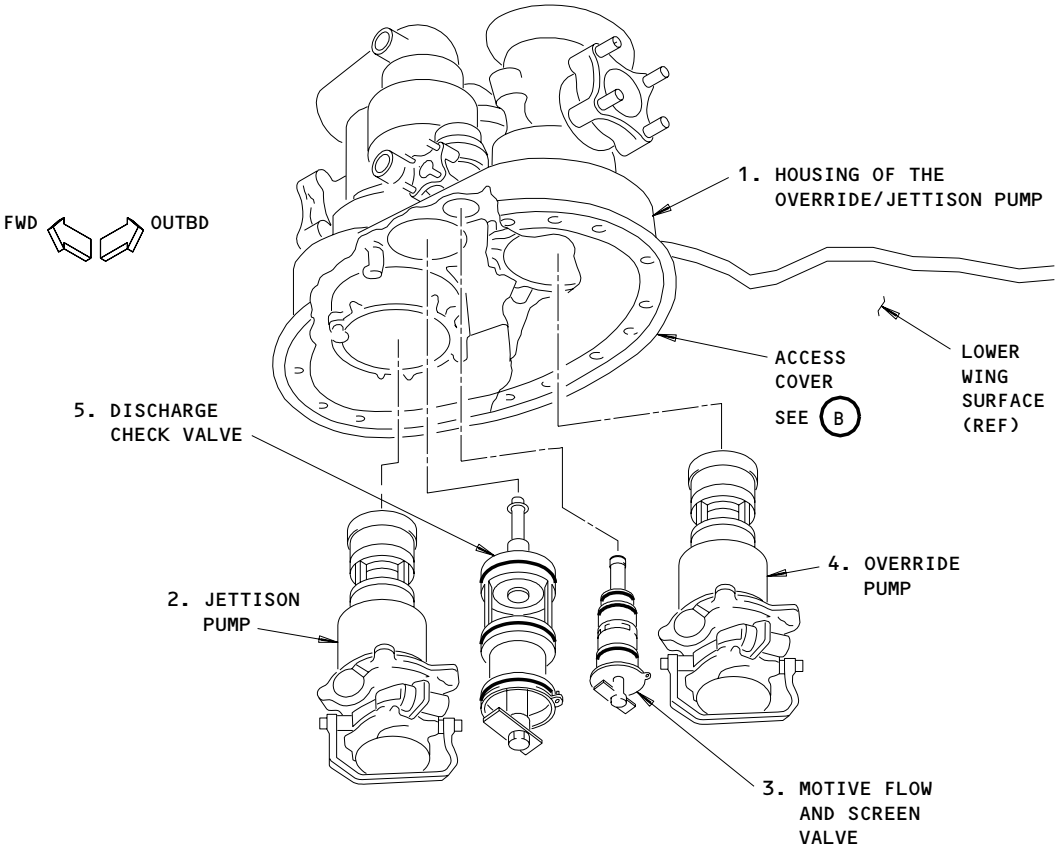

OVERRIDE/JETTISON PUMP

A

Housing of the Override/Jettison Pump
Figure 401 (Sheet 1)

BOEING PROPRIETARY - Copyright (C) - Unpublished Work - See title page for details.

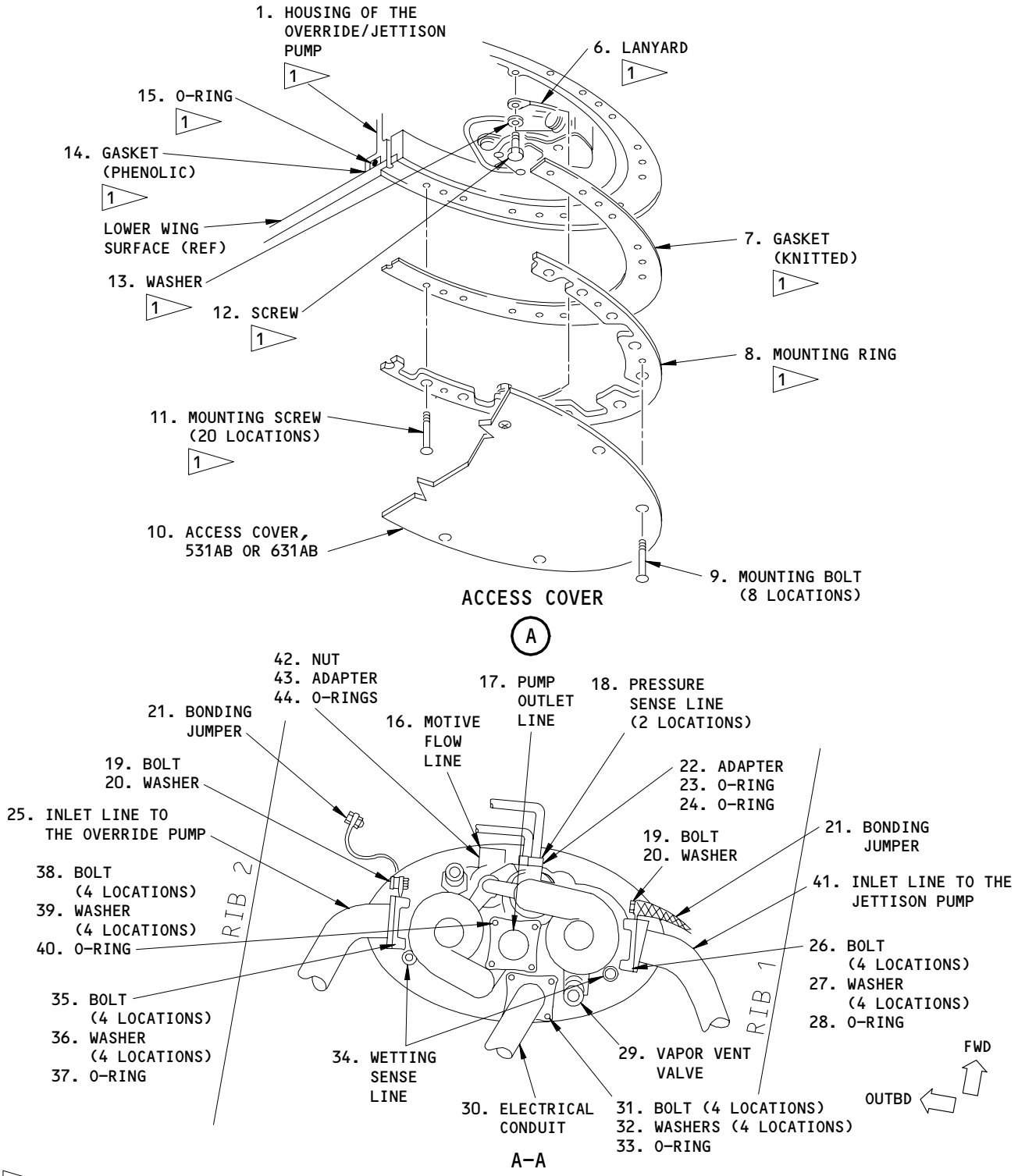

1 THESE COMPONENTS ARE REMOVED ONLY TO REPLACE THE HOUSING. TO REPLACE THE OVERRIDE PUMP, IT IS ONLY NECESSARY TO REMOVE THE ACCESS COVER. REFER TO THE TEXT.

Housing of the Override/Jettison Pump
Figure 401 (Sheet 2)

BOEING PROPRIETARY - Copyright (C) - Unpublished Work - See title page for details.

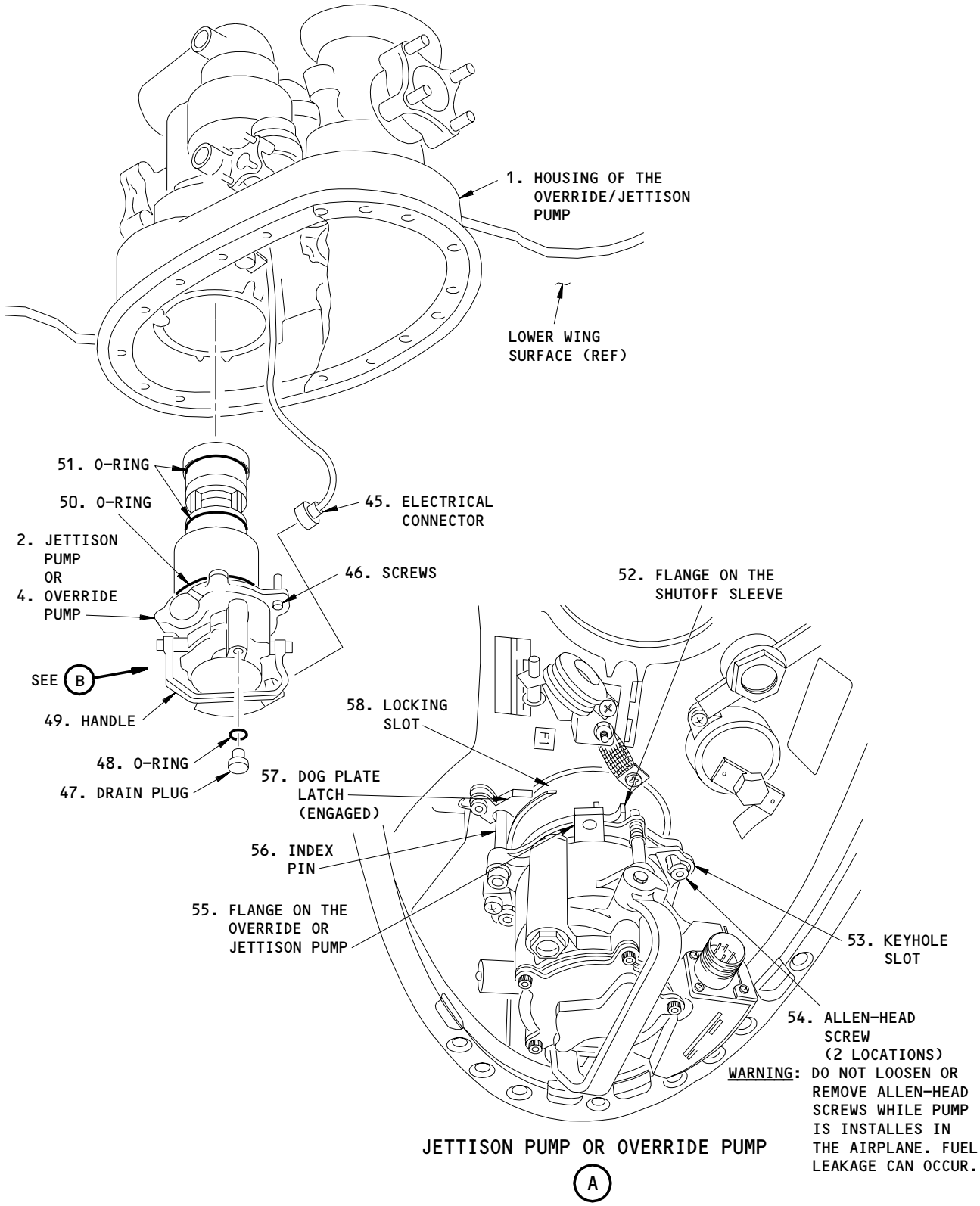

Override Pump and Jettison Pump Installation
Figure 402 (Sheet 1)

BOEING PROPRIETARY - Copyright (C) - Unpublished Work - See title page for details.

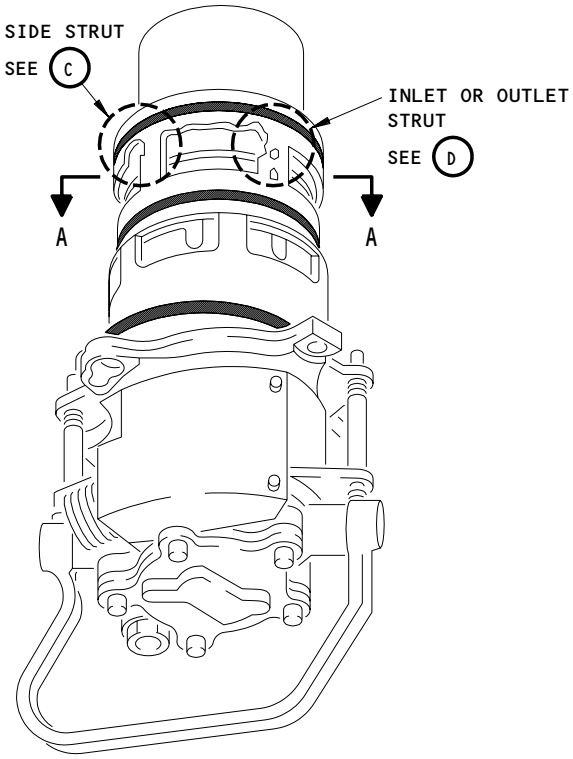

OVERRIDE PUMP OR JETTISON PUMP

B

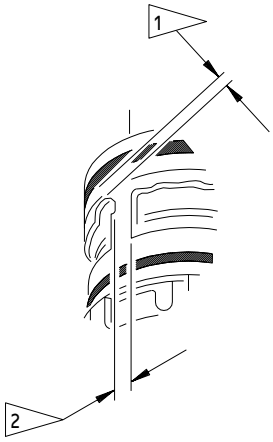

SIDE STRUT

C

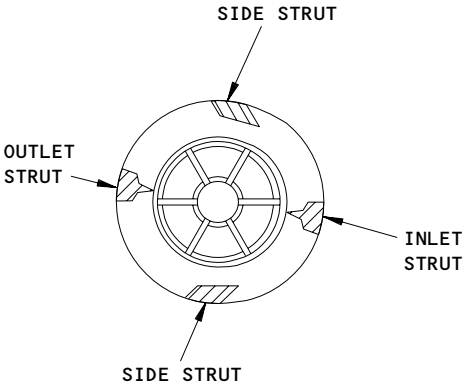

A-A

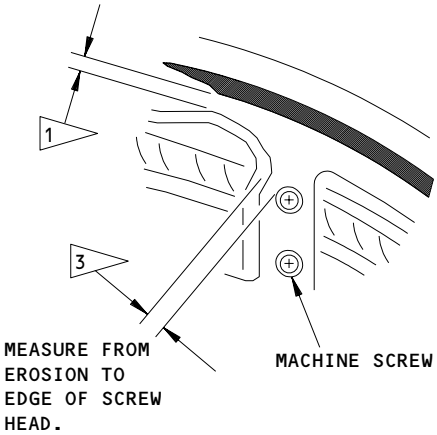

INLET OR OUTLET STRUT

D

1 REPLACE THE PUMP IF LESS THAN 0.04 INCH. (ALL STRUTS)

2 REPLACE THE PUMP IF LESS THAN 0.170 INCH. (SIDE STRUTS)

3 REPLACE THE PUMP IF LESS THAN 0.04 INCH. (INLET AND OUTLET STRUTS)

Override Pump and Jettison Pump
Figure 402 (Sheet 2)

BOEING PROPRIETARY - Copyright (C) - Unpublished Work - See title page for details.

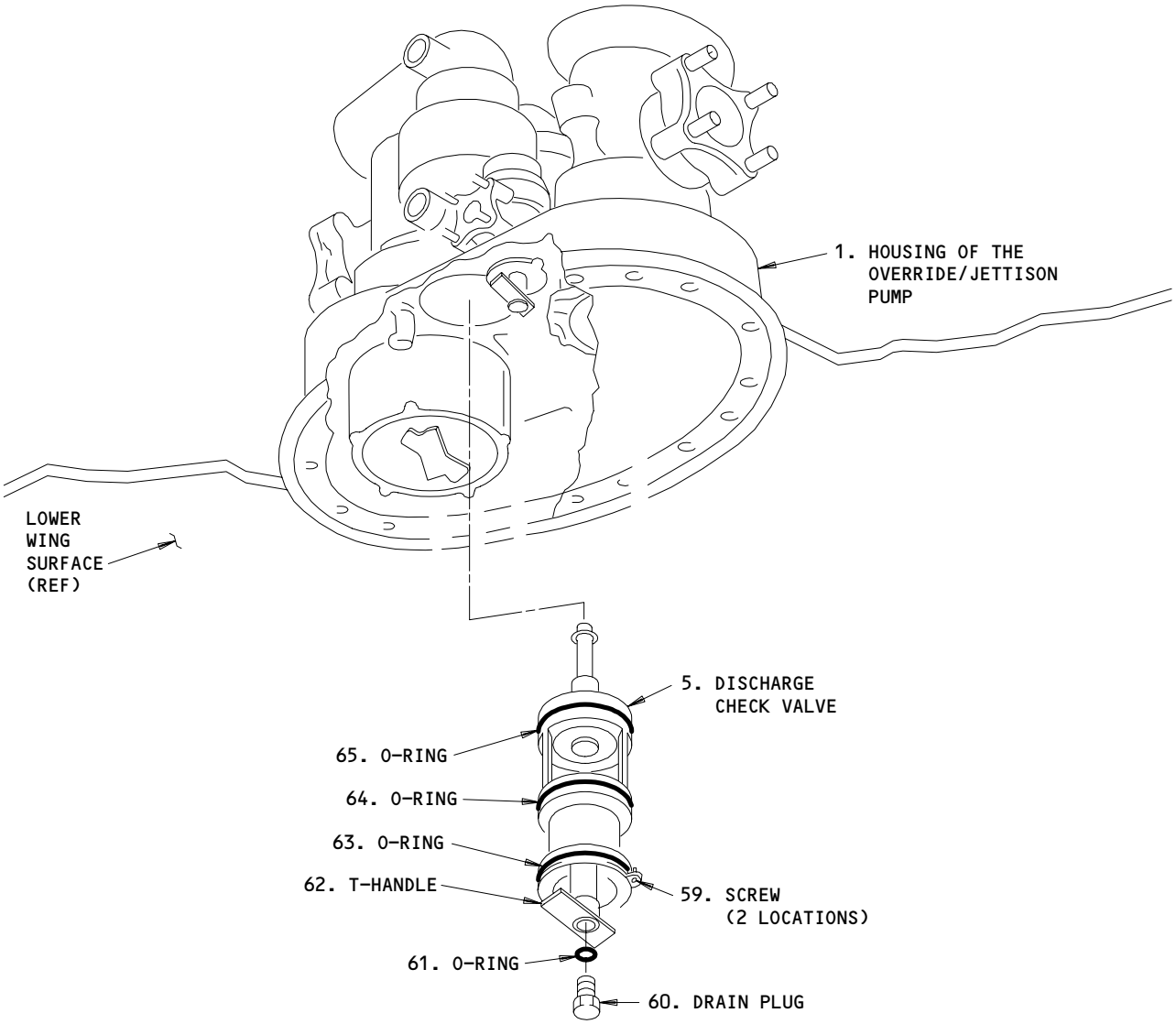

Discharge Check Valve Installation
Figure 403

BOEING PROPRIETARY - Copyright (C) - Unpublished Work - See title page for details.

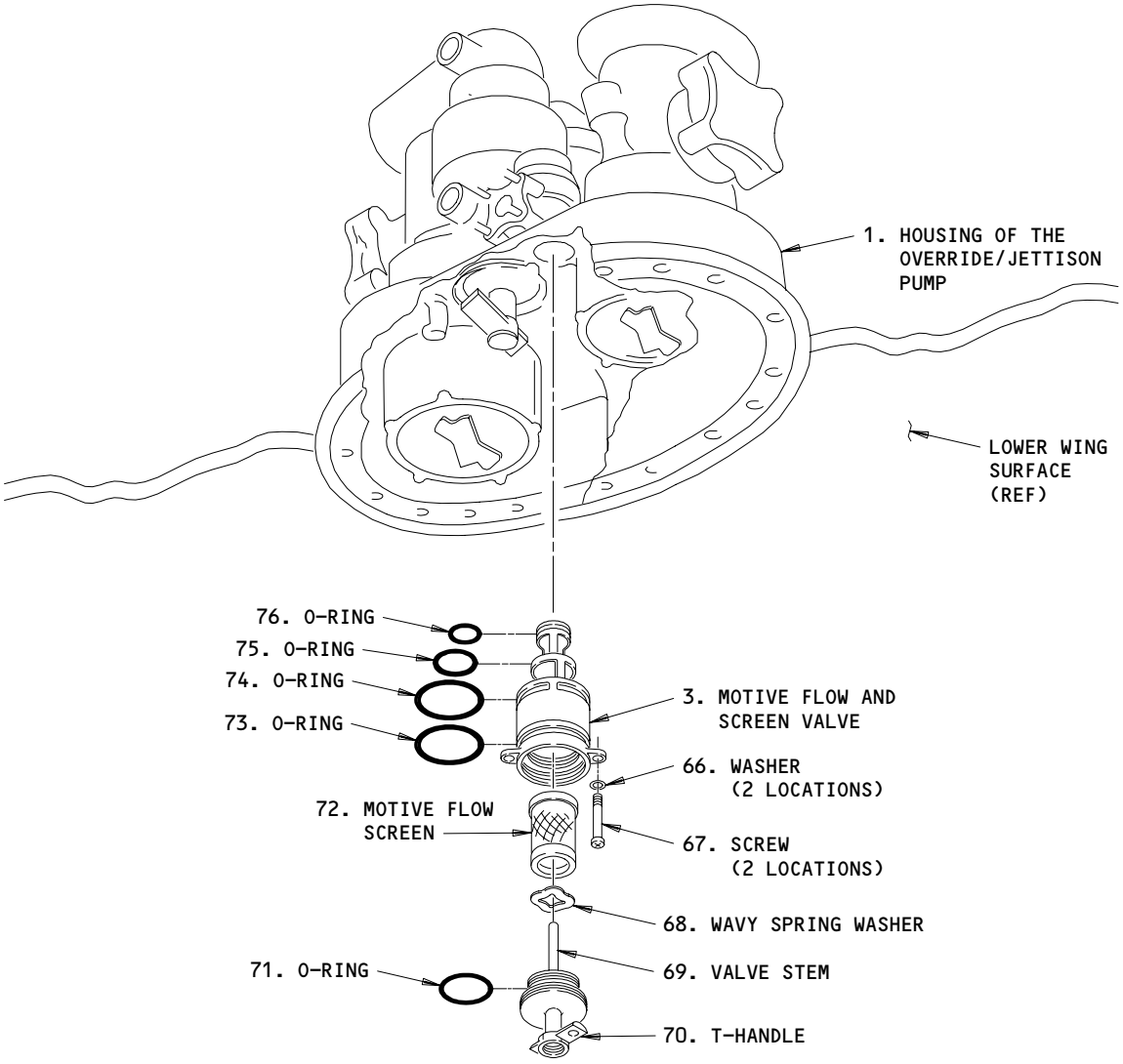

Motive Flow and Screen Valve Installation
Figure 404

BOEING PROPRIETARY - Copyright (C) - Unpublished Work - See title page for details.

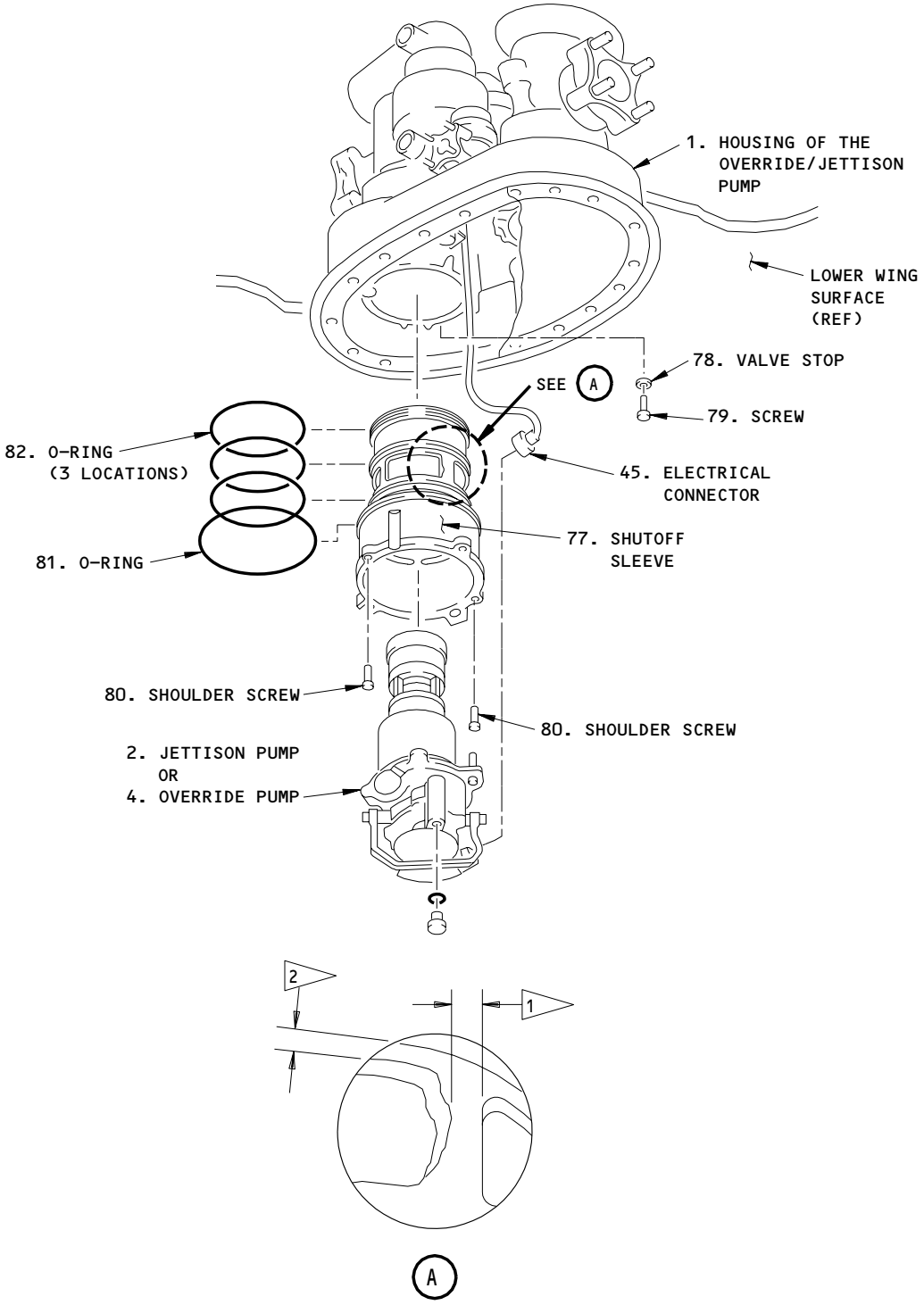

1 REPLACE THE SHUTOFF SLEEVE IF LESS THAN 0.170 INCH (4.318 MILLIMETERS)

2 REPLACE THE SHUTOFF SLEEVE IF LESS THAN 0.040 INCH (1.016 MILLIMETERS)

Shutoff Sleeve Installation
Figure 405

BOEING PROPRIETARY - Copyright (C) - Unpublished Work - See title page for details.

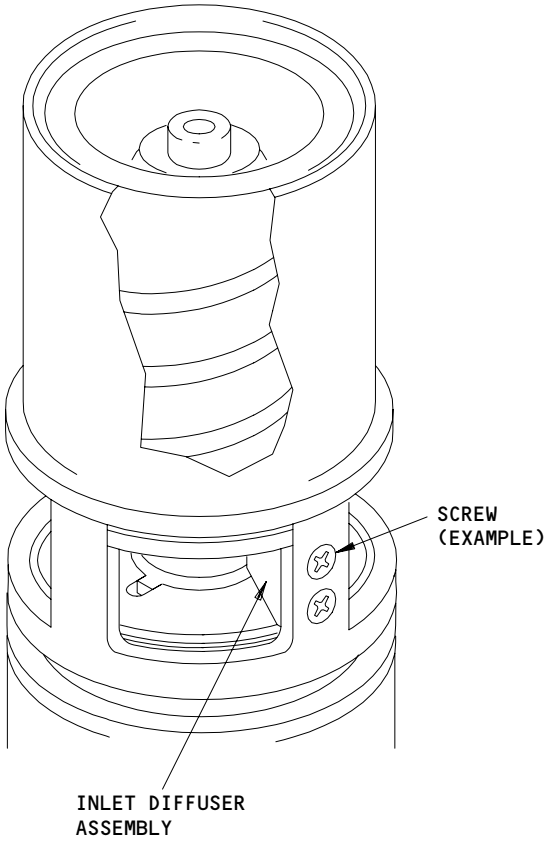

Inlet Diffuser Assembly
Figure 406

BOEING PROPRIETARY - Copyright (C) - Unpublished Work - See title page for details.

(2) Access Panels

531AB	Access Cover (Left)
531BB	Auxiliary Tank Access Door (Left)
631AB	Access Cover (Right)
631BB	Auxiliary Tank Access Door (Right)

C. Procedure

S 654-248-002
(1) Defuel the auxiliary fuel tank (AMM 28-26-00/201).

NOTE: Defueling the main fuel tank is optional.

S 864-198-002
(2) Remove electrical power (AMM 24-22-00/201).

S 654-199-002
(3) Do the Purging and Fuel Tank Entry procedure (AMM 28-11-00/201).

S 014-004-002
(4) Remove the applicable left or right auxiliary tank access door, 531BB or 631BB (AMM 28-11-02/401).

S 014-005-002
(5) Hold the access cover (10) and remove the mounting bolts (9) that attach the access cover (10) to the lower wing surface (View B, Fig. 401).

S 014-006-002
(6) Remove the access cover (10).

S 014-007-002
(7) Remove the screw (12) and washer (13) that attach the lanyard (6) to the housing (1).

S 434-008-002
(8) Install the screw (12) and washer (13) on the housing (1).

S 034-009-002
(9) Remove the mounting screws (11), mounting ring (8) and gasket (7) from the lower wing surface.

S 034-010-002
(10) Disconnect the electrical connectors (45) from the override pump (4) and jettison pump (2) (Fig. 402).

NOTE: Make marks on the electrical connectors to make sure they are installed on the correct pump.

BOEING PROPRIETARY - Copyright (C) - Unpublished Work - See title page for details.

S 034-011-002
(11) Disconnect the clamps that hold the wires from the housing (1).

S 014-012-002
(12) Go into the auxiliary fuel tank.

S 034-013-002
(13) Remove the bolts (31) and washers (32) that attach the electrical conduit (30) to the housing (1) (View A-A, Fig. 401).

S 034-014-002
(14) Remove the electrical wires from the housing (1).

S 034-015-002
(15) Discard the O-ring (33).

S 034-016-002
(16) Remove the bolts (19) and washers (20) to disconnect the bonding jumpers (21) from the housing (1).

S 034-017-002
(17) Remove the bolts (26) and washers (27) at the flanged connection of the inlet line to the override pump (25) to disconnect it from the housing (1).

S 034-018-002
(18) Discard the O-ring (26).

S 034-019-002
(19) Remove the bolts (35) and washers (36) at the flanged connection of the inlet line to the jettison pump (41) to disconnect it from the housing (1).

S 034-021-002
(20) Discard the O-ring (37).

S 034-020-002
(21) Remove the bolts (38) and washers (39) at the flanged connection of the pumps to disconnect the pump outlet line (17) from the housing (1).

S 034-022-002
(22) Discard the O-ring (40).

S 034-023-002
(23) Remove the nut (42) and the adapter (43) to disconnect the motive flow line (16) from the housing (1).

S 034-024-002
(24) Discard the O-rings (44).

BOEING PROPRIETARY - Copyright (C) - Unpublished Work - See title page for details.

S 034-025-002
(25) Discard the two wetting sense lines (34) from the housing (1).

S 034-026-002
(26) Remove the adapter (20) to disconnect the two pressure sense lines (18) from the housing (1).

S 034-027-002
(27) Discard the O-rings (23, 24).

S 034-203-002
(28) Disconnent the vapor vent valves (29) from the housing (1).

S 024-028-002
(29) Remove the housing (1) from the auxiliary fuel tank.

TASK 28-22-05-404-029-002

3. Install the Housing of the Override/Jettison Pump

A. Consumable Materials
(1) A00767 Sealant - Integral Fuel Tank BMS 5-45 Class B

B. References
(1) AMM 12-11-01/301, Fuel Tank Pressure Fueling
(2) AMM 20-10-21/601, Electrical Bonding
(3) AMM 28-11-00/201, Fuel Tanks
(4) AMM 28-31-00/501, Fuel Jettison System
(5) AMM 51-31-01/201, Seals and Sealing

C. Access
(1) Location Zones
531 Center Auxiliary Tank (Left)
631 Center Auxiliary Tank (Right)

(2) Access Panels
531AB Access Cover (Left)
531BB Auxiliary Tank Access Door (Left)
631AB Access Cover (Right)
631BB Auxiliary Tank Access Door (Right)

D. Procedure

S 944-200-002

WARNING: OBEY THE FUEL TANK ENTRY PRECAUTIONS. FAILURE TO OBEY THE FUEL TANK ENTRY PRECAUTIONS CAN CAUSE INJURY OR DAMAGE.

(1) Obey the fuel tank entry precautions (AMM 28-11-00/201).

S 214-031-002
(2) Make sure the seal surfaces on the housing (1) and the lower wing surface are clean (View B, Fig. 401).

BOEING PROPRIETARY - Copyright (C) - Unpublished Work - See title page for details.

S 424-032-002
(3) Use a new O-ring (15) and put the housing (1) over the opening in the lower wing surface.

S 434-033-002
(4) From out of the fuel tank, install a new gasket (7), mounting ring (8) and mounting screws (11), but do not tighten the mounting screws (11).

S 394-034-002
(5) Apply the sealant around the bottom of the housing (1) (AMM 51-31-01/201).

S 434-035-002
(6) Install the O-ring (28), four washers (27) and four bolts (26) to connect the inlet line of the override pump (25) to the housing (1) (View A-A, Fig. 401).

S 434-036-002
(7) Install the O-ring (37), four washers (36) and four bolts (35) to connect the inlet line of the jettison pump (41) to the housing (1).

S 434-037-002
(8) Install the O-ring (40), four washers (39) and four bolts (38) to connect the pump outlet line (17) to the housing (1).

S 434-038-002
(9) Install the O-rings (44), adapter (43) and nut (42) to connect the motive flow line (16) to the housing (1).

S 434-039-002
(10) Connect the two wetting sense lines (34) to the housing (1).

S 434-040-002
(11) Install the two O-rings (23, 24) and the adapter (22) to connect the two pressure sense lines (18) to the housing (1).

S 434-041-002
(12) Install a new O-ring (33) on the electrical conduit (30).

S 434-042-002
(13) Install the electrical wires through the electrical conduit port on the housing (1).

S 434-043-002
(14) Put the electrical conduit (30) on the housing (1) and install the washers (32) and the bolts (31).

S 434-204-002
(15) Connect the vapor vent valves (29) to the housing (1).

BOEING PROPRIETARY - Copyright (C) - Unpublished Work - See title page for details.

S 434-044-002
(16) Install the bolts (19) and washers (20) to connect the bonding jumpers (21) to the housing (1).

NOTE: CDCCL - Refer to the task: Airworthiness Limitation Precautions (AMM 28-00-00/201), for important information on Critical Design Configuration Control Limitations (CDCCLs).

NOTE: This is applicable to Airworthiness Limitation 28-AWL-07.

S 214-045-002

CAUTION: MAKE SURE YOU REMOVE ALL DISCARDED MATERIALS FROM THE FUEL TANK. DISCARDED MATERIALS IN THE FUEL TANK COULD CAUSE A BLOCKAGE OF THE EJECTOR PUMPS AND PREVENT WATER SCAVENGE.

(17) Make sure you remove all discarded materials from the fuel tank.

S 434-046-002
(18) From out of the fuel tank, tighten the mounting screws (11) to 51-56 pound-inches on the housing (1) (View B, Fig. 401).

S 434-047-002
(19) Connect the electrical connectors (45) to the override pump (4) and the jettison pump (2) (Fig. 402).

S 434-048-002
(20) Install the clamps that hold the wires on the housing (1).

S 224-049-002
(21) Make sure the bonding resistance between the housing (1) and the airplane structure is 0.0002 ohm (0.2 milliohm) or less (AMM 20-10-21/601).

NOTE: CDCCL - Refer to the task: Airworthiness Limitation Precautions (AMM 28-00-00/201), for important information on Critical Design Configuration Control Limitations (CDCCLs).

NOTE: This is applicable to Airworthiness Limitation 28-AWL-07.

S 014-050-002
(22) Remove the screw (12) and washer (13) that attaches to the lanyard (6) from the housing (1) (View B, Fig. 401).

S 414-051-002
(23) Use the screw (12) and washer (13) to connect the lanyard (6) on the access cover (10) to the housing (1).

BOEING PROPRIETARY - Copyright (C) - Unpublished Work - See title page for details.

S 414-052-002
(24) Hold the access cover (10) on the lower wing surface and install the mounting bolts (9).

S 414-053-002
(25) Tighten the mounting bolts (9) to 20-22 pound-inches.

S 414-205-002
(26) Install the applicable left or right auxiliary tank access door, 531BB or 631BB (AMM 28-11-02/401).

S 654-237-002
(27) Refuel the auxiliary fuel tank to a minimum of 21,700 lbs (9900 kgs) (AMM 12-11-01/301).

NOTE: This is the minimum fuel quantity necessary to make sure the seal surface for the override pump housing is covered and the override pumps are correctly primed with a pitch of 0 degrees and a roll of 0 degrees.

You can refuel each fuel tank by pressure fueling (AMM 12-11-01/301) or by tank to tank transfer (AMM 28-26-00/201).

S 214-055-002
(28) Make sure there are no fuel leaks.

S 714-056-002
(29) Do the Test of the Left or Right Override/Jettison Pump procedure (AMM 28-31-00/501).

TASK 28-22-05-004-057-002
4. Remove the Override Pump
A. Equipment
(1) Container: suitable for jet fuel, 1 gallon capacity, commercially available
B. Access
(1) Location Zones
531 Center Auxiliary Tank (Left)
631 Center Auxiliary Tank (Right)

(2) Access Panels
531AB Access Cover (Left)
631AB Access Cover (Right)

BOEING PROPRIETARY - Copyright (C) - Unpublished Work - See title page for details.

C. Procedure

S 864-058-002
(1) To remove the left override pump, open this circuit breaker on the main power distribution panel, P6, and attach DO-NOT-CLOSE tag:
(a) 6F15, L FUEL OVRD PUMP

S 864-059-002
(2) To remove the right override pump, open this circuit breaker on the main power distribution panel, P6, and attach DO-NOT-CLOSE tag:
(a) 6F21, R FUEL OVRD PUMP

S 414-060-002
(3) Hold the access cover (10) and remove the mounting bolts (9) (View B, Fig. 401).

S 414-061-002
(4) Lower the access cover (10) until the lanyard (6) holds the access cover (10).

NOTE: It is not necessary to remove the mounting ring or the gasket.

S 034-062-002
(5) Disconnect the electrical connector (45) from the override pump (4) (Fig. 402).

S 034-063-002
(6) Loosen the drain plug (47) but do not remove.

S 034-064-002
(7) Remove the screw (46) that holds the bonding jumper to the override pump (4).

NOTE: The screw (46) is attached to the bonding jumper.

S 034-065-002
(8) Remove the other screws (46) that attach to the override pump (4).

BOEING PROPRIETARY - Copyright (C) - Unpublished Work - See title page for details.

S 034-241-002

WARNING: DO NOT LOOSEN OR REMOVE ALLEN-HEAD SCREWS (54) WHILE THE PUMP (4) IS INSTALLED ON THE AIRPLANE. LOOSENING OR REMOVING THESE SCREWS WILL CAUSE THE PUMP (4) TO SEPARATE FROM THE SHUTOFF SLEEVE (77). FUEL LEAKAGE CAN OCCUR.

WARNING: DO NOT TURN THE OVERRIDE PUMP (4). FUEL LEAKAGE CAN OCCUR IF YOU TURN THE OVERRIDE PUMP (4) WITHOUT THE SHUTOFF SLEEVE (77) ATTACHED.

(9) Turn the handle (49) on the override pump (4) down 90 degrees.

S 024-067-002

(10) Use the handle (49) and pull the override pump (4) and shutoff sleeve (77) down until the valve stop (78) stops the movement (approximately 1.5 inches) (Fig. 405).

NOTE: The last 1/4 inch of movement can require increased force.

S 214-068-002

(11) Make sure the locking slot (58) and the dog plate latch (57) align (Fig. 402).

S 034-069-002

CAUTION: DO NOT LET THE OVERRIDE PUMP (4) TURN WHEN YOU REMOVE THE DRAIN PLUG (47). IF THE OVERRIDE PUMP (4) TURNS, DAMAGE TO THE OVERRIDE PUMP (4) AND DRAIN PLUG (47) CAN OCCUR.

CAUTION: MAKE SURE FUEL DOES NOT CONTINUOUSLY DRAIN. IF FUEL CONTINUOUSLY DRAINS, THE SHUTOFF SLEEVE (77) IS NOT CLOSED AND YOU MUST PUSH THE OVERRIDE PUMP (4) UP TO REINSTALL IT AND DEFUEL THE FUEL TANK.

(12) Hold the override pump (4) and remove the drain plug (47) and the O-ring (48) from the override pump (4).

S 034-244-002

(13) If fuel continuously drains, do the steps that follow:
(a) Install the override pump (4).
(b) Defuel the auxiliary fuel tank (AMM 28-26-00/201).
(c) Remove the override pump (4).

S 654-070-002

(14) Drain all fuel that remains in the override pump (4) into a container.

BOEING PROPRIETARY - Copyright (C) - Unpublished Work - See title page for details.

S 214-071-002

WARNING: MAKE SURE THAT THE DOG PLATE LATCH (57) ON THE HOUSING ALIGNS WITH THE LOCKING SLOT (58) ON THE SHUTOFF SLEEVE. FUEL LEAKAGE CAN OCCUR IF YOU TURN THE OVERRIDE PUMP (4) WITHOUT THE SHUTOFF SLEEVE (77) ATTACHED.

(15) Make sure the dog latch plate (57) and the locking slot (58) align.

S 024-072-002

(16) Turn the override pump (4) approximately 12 degrees counterclockwise until it stops. This releases the override pump (4) from the shutoff sleeve (77).

S 214-073-002

(17) Make sure the dog plate latch (57) on the override pump (4) engages with the locking slot (58) on the shutoff sleeve (77).
   (a) If the dog plate latch (57) does not engage with the locking slot (58), do the steps that follow:
      1) Make sure the override pump (4) and the flanges on the shutoff sleeve (45) touch.
      2) Turn the override pump (4) in the clockwise direction.
      3) Pull the override pump (4) down until the dog plate latch (57) and the locking slot (58) align.
      4) Turn the override pump (4) approximately 12 degrees counterclockwise until it stops. This releases the override pump (4) from the shutoff sleeve (77).
      5) Make sure the dog plate latch (57) on the override pump (4) engages with the locking slot (58) on the shutoff sleeve (77).

S 024-074-002

(18) Pull down on the handle (49) and remove the override pump (4) from the shutoff sleeve (77).

S 034-075-002

(19) Remove the O-rings (50, 51) on the override pump (4).

S 214-238-002

(20) Examine the struts on the override pump (Fig. 402).
   (a) If one or more of the struts is less than the dimension shown, replace the override pump.

S 434-077-002

(21) Install the drain plug (47) into the override pump (4) if you do not install that override pump (4).

TASK 28-22-05-404-078-002

5. Install the Override Pump

BOEING PROPRIETARY - Copyright (C) - Unpublished Work - See title page for details.

A. Consumable Materials
   (1) D00215 Fluorosilicone Grease, DC FS-1292
B. References
   (1) AMM 20-10-21/601, Electrical Bonding
   (2) AMM 24-22-00/201, Electrical Power - Control
   (3) AMM 28-31-00/501, Fuel Jettison System
C. Access
   (1) Location Zones
       531 Center Auxiliary Tank (Left)
       631 Center Auxiliary Tank (Right)

   (2) Access Panels
       531AB Access Cover (Left)
       631AB Access Cover (Right)

D. Procedure

S 284-226-002

WARNING: DO NOT INSTALL THE PUMP IF THE DIFFUSER ASSEMBLY IS LOOSE. A LOOSE DIFFUSER CAN MAKE SPARKS DURING DRY OPERATION OF THE PUMP. AN EXPLOSION CAN OCCUR.

(1) FOR AIRPLANES WITHOUT PRR B12778-2, OR PRE-SB 28-62;
Do these steps to do an inspection of the override pump (Fig. 406):
   (a) Apply hand pressure to the inlet diffuser blades to make sure the diffuser assembly is tightly installed.
   (b) Look at the screws and the diffuser assembly while you apply hand pressure to see if they move from their correct position.
   (c) If the diffuser or the screws move when you apply hand pressure, do not install the pump.

S 434-079-002
(2) If you install the override pump (4) that was removed, do the steps that follow:
   (a) Install three new O-rings (50, 51), lightly lubricated with fluorosilicone grease, DC FS-1292, on the override pump (4) (Fig. 402).
   (b) Install a new O-ring (48), lightly lubricated with fluorosilicone grease, DC FS-1292, on the drain plug (47).

S 434-080-002
(3) If the drain plug (47) is not installed, do the steps that follow:
   (a) Install the drain plug (47) on the override pump (4) (Fig. 402).
   (b) Tighten the drain plug (47) to 30-40 pound-inches.
   (c) Install the lockwire on the drain plug (47).

BOEING PROPRIETARY - Copyright (C) - Unpublished Work - See title page for details.

S 644-081-002
(4) Lubricate the O-rings (50, 51) on the override pump (4) with fluorosilicone grease, DC FS-1292.

NOTE: The fluorosilicone grease, DC FS-1292 makes installation of the override pump (4) easier.

S 424-082-002
(5) Align the keyhole slot (53) on the override pump (4) with the Allen-head screws (54) (View A, Fig. 402).

S 424-083-002
(6) Install the override pump (4) in the shutoff sleeve (77).
(a) Do not turn the override pump (4) as you push up on the override pump (4).
(b) Push up on the override pump (4) until the flanges on the override pump (55) and the flanges on the shutoff sleeve (52) touch.

S 214-084-002
(7) Make sure the Allen-head screws (54) fit through the keyhole slots (53).

S 424-085-002
(8) Turn the override pump (4) approximately 12 degrees clockwise.

S 434-086-002
(9) Put the handle (49) on the override pump (4) to its usual position.

S 424-087-002
(10) Push the override pump (4) and shutoff sleeve (77) up until the flange on the shutoff sleeve (52) touches the housing (1).

S 434-088-002
(11) Install the screw (46) that attaches to the bonding jumper on the override pump (4).

S 434-089-002
(12) Install the screws (46) on the override pump (4).

S 434-090-002
(13) Tighten the screws (46) to 48-53 pound-inches.

BOEING PROPRIETARY - Copyright (C) - Unpublished Work - See title page for details.

S 224-091-002
(14) Make sure the bonding resistance between the housing (1) and the override pump (4) is 0.00035 ohm (0.35 milliohm) or less (AMM 20-10-21/601).

NOTE: CDCCL - Refer to the task: Airworthiness Limitation Precautions (AMM 28-00-00/201), for important information on Critical Design Configuration Control Limitations (CDCCLs).

NOTE: This is applicable to Airworthiness Limitation 28-AWL-07.

S 434-092-002
(15) Connect the electrical connector (45) to the override pump (4).

S 654-227-002
(16) Refuel the auxiliary fuel tank to a minimum of 21,700 lbs (9900 kgs) (AMM 12-11-01/301).

NOTE: This is the minimum fuel quantity necessary to make sure the seal surface for the override pump housing is covered and the override pumps are correctly primed with a pitch of 0 degrees and a roll of 0 degrees.

You can refuel each fuel tank by pressure fueling (AMM 12-11-01/301) or by tank to tank transfer (AMM 28-26-00/201).

S 214-094-002
(17) Make sure there are no fuel leaks at the override pump (4).

S 414-095-002
(18) Put and hold the access cover (10) against the lower wing surface (View B, Fig. 401).
(a) Make sure the lanyard (6) is in the housing.

S 414-096-002
(19) Install the mounting bolts (9) on the access cover (10).

S 414-097-002
(20) Tighten the mounting bolts (9) to 20-22 pound-inches.

S 864-098-002
(21) For the left override pump, remove the DO-NOT-CLOSE tag and close this circuit breaker on the P6 panel:
(a) 6F15, L FUEL OVRD PUMP

BOEING PROPRIETARY - Copyright (C) - Unpublished Work - See title page for details.

S 864-099-002
(22) For the right override pump, remove the DO-NOT-CLOSE tag and close this circuit breaker on the P6 panel:
(a) 6F21, R FUEL OVRD PUMP

S 714-100-002
(23) Do the Test of the Left or Right Override/Jettison Pump procedure (AMM 28-31-00/501).

TASK 28-22-05-004-101-002

6. Remove the Discharge Check Valve

A. Equipment
(1) Container: suitable for jet fuel, 1 gallon capacity, commercially available

B. References
(1) AMM 12-11-03/301, Fuel Sump Draining
(2) AMM 28-26-00/201, Defueling

C. Access
(1) Location Zones
531 Center Auxiliary Tank (Left)
631 Center Auxiliary Tank (Right)

(2) Access Panels
531AB Access Cover (Left)
631AB Access Cover (Right)

D. Procedure

S 654-102-002
(1) Defuel the applicable fuel tank (AMM 28-26-00/201).

NOTE: Defueling the main fuel tank is optional.

S 654-201-002
(2) Drain the applicable fuel tank sump (AMM 12-11-03/301).

S 864-103-002
(3) For the discharge check valves in the left auxiliary fuel tank, do the steps that follow:
(a) Open this circuit breaker on the main power distribution panel, P6, and attach DO-NOT-CLOSE tag:
1) 6F15, L FUEL OVRD PUMP
(b) Open this circuit breaker on the overhead circuit breaker panel, P11, and attach DO-NOT-CLOSE tag:
1) 11M13, L FUEL JTSN CONT
(c) Open this circuit breaker on the left miscellaneous electrical equipment panel, P36, and attach DO-NOT-CLOSE tag:
1) 36F4 or 36G7, L FUEL JETT PUMP

BOEING PROPRIETARY - Copyright (C) - Unpublished Work - See title page for details.

S 864-104-002

(4) For the discharge check valves in the right auxiliary fuel tank, do the steps that follow:
   (a) Open this circuit breaker on the main power distribution, P6, and attach DO-NOT-CLOSE tag:
      1) 6F21, R FUEL OVRD PUMP
   (b) Open this circuit breaker on the overhead circuit breaker panel, P11, and attach DO-NOT-CLOSE tag:
      1) 11M22, R FUEL JTSN CONT
   (c) Open this circuit breaker on the right miscellaneous electrical equipment panel, P37, and attach DO-NOT-CLOSE tag:
      1) 37F4 or 37G4, R FUEL JETT PUMP

S 014-105-002

(5) Hold the access cover (10) and remove the mounting bolts (9) (View B, Fig. 401).

S 014-106-002

(6) Lower the access cover (10) until the lanyard (6) holds the access cover (10).

S 034-107-002

(7) Remove the screws (46) that attach to the override pump (4) or jettison pump (2).

S 034-108-002

(8) Remove the clamp that holds the wires for the override pump (4) or jettison pump (2) against the housing (1).

S 034-109-002

WARNING: DO NOT TURN THE OVERRIDE PUMP (4) OR JETTISON PUMP (2). FUEL LEAKAGE CAN OCCUR IF YOU TURN THE OVERRIDE PUMP (4) OR JETTISON PUMP (2).

(9) Turn the handle (49) on the override pump (4) or jettison pump (2) down 90 degrees, but do not turn the override pump (4) or jettison pump (2).

S 034-202-002

CAUTION: PULL THE OVERRIDE PUMP (4) OR JETTISON PUMP (2) DOWN FULLY. FUEL LEAKAGE CAN OCCUR IF YOU DO NOT PULL THE OVERRIDE PUMP (4) OR JETTISON PUMP (2) DOWN FULLY.

(10) Use the handle (49) and pull the override pump (4) or jettison pump (2) down until it stops, but do not turn the override pump (4) or jettison pump (2).

BOEING PROPRIETARY - Copyright (C) - Unpublished Work - See title page for details.

S 034-111-002
(11) Remove the drain plug (60) from the discharge check valve (5) (Fig. 403).

S 654-112-002
(12) Drain all fuel that remains into a suitable container.

S 034-113-002
(13) Remove the two screws (59) from the discharge check valve (5).

S 024-114-002
(14) Use the T-handle (62) and pull the discharge check valve (5) down from the housing (1) to remove.

S 434-115-002
(15) If you install a new discharge check valve (5), install the drain plug (60) in the discharge check valve (5).

TASK 28-22-05-404-116-002

7. Install the Discharge Check Valve

A. Consumable Materials
(1) D00215 Fluorosilicone Grease, DC FS-1292

B. References
(1) AMM 12-11-01/301, Fuel Tank Pressure Fueling
(2) AMM 24-22-00/210, Electrical Power - Control
(3) AMM 28-31-00/501, Fuel Jettison System

C. Access
(1) Location Zones
531 Center Auxiliary Tank (Left)
631 Center Auxiliary Tank (Right)

(2) Access Panels
531AB Access Cover (Left)
631AB Access Cover (Right)

D. Procedure

S 434-117-002
(1) If you install the removed discharge check valve (5), do the steps that follow:
(a) Lubricate the O-ring (61) of the drain plug (5) with fluorosilicone grease, DC FS-1292 (Fig. 403).
(b) Install the O-ring (61) on the drain plug (60).

S 434-118-002
(2) If the drain plug (60) is not installed, do the steps that follow:
(a) Install the drain plug (60) into the discharge check valve (5) (Fig. 403).
(b) Tighten the drain plug (60) to 30-40 pound-inches.

BOEING PROPRIETARY - Copyright (C) - Unpublished Work - See title page for details.

S 434-119-002
(3) Install lockwire on the drain plug (60) (Fig. 403).

S 644-120-002
(4) Lubricate the new O-rings (63, 64, 65) for the discharge check valve (5) with fluorosilicone grease, DC FS-1292.

S 434-122-002
(5) Install the new O-rings (63, 64, 65) on the discharge check valve (5).

S 424-123-002
(6) Put and hold the discharge check valve (5) in the housing (1).

S 424-124-002
(7) Install the two screws (59) in the discharge check valve (5).

S 424-125-002
(8) Tighten the two screws (59) to 20-22 pound-inches.

S 434-126-002
(9) Put the handle (49) on the override pump (4) or jettison pump (2) to its usual position.

S 434-127-002
(10) Push the override pump (4) or jettison pump (2) up until it is in the housing (1).

S 434-128-002
(11) Install the screws (46) on the override pump (4) or jettison pump (2).

S 434-129-002
(12) Tighten the screws (46) to 48-53 pound-inches.

S 434-130-002
(13) Install the clamps that hold the wires against the housing (1).

BOEING PROPRIETARY - Copyright (C) - Unpublished Work - See title page for details.

S 654-230-002
(14) Refuel the auxiliary fuel tank to a minimum of 21,700 lbs (9900 kgs) (AMM 12-11-01/301).

NOTE: This is the minimum fuel quantity necessary to make sure the seal surface for the override pump housing is covered and the override pumps are correctly primed with a pitch of 0 degrees and a roll of 0 degrees.

You can refuel each fuel tank by pressure fueling (AMM 12-11-01/301) or by tank to tank transfer (AMM 28-26-00/201).

S 214-132-002
(15) Make sure there are no fuel leaks at the discharge check valve (5) or the override pump (4) or the jettison pump (2).

S 414-133-002
(16) Put and hold the access cover (10) against the lower wing surface (View B, Fig. 401).
(a) Make sure the lanyard (6) is in the housing.

S 434-134-002
(17) Install the mounting bolts (9) on the access cover (10).

S 434-135-002
(18) Tighten the mounting bolts (9) to 20-22 pound-inches.

S 864-136-002
(19) For the discharge check valves in the left auxiliary fuel tank, do the steps that follow:
(a) Remove the DO-NOT-CLOSE tag and close this circuit breaker on the P6 panel:
1) 6F15, L FUEL OVRD PUMP
(b) Remove the DO-NOT-CLOSE tag and close this circuit breaker on the P11 panel:
1) 11M13, L FUEL JTSN CONT
(c) Remove the DO-NOT-CLOSE tag and close this circuit breaker on the P36 panel:
1) 36F4 or 36G7, L FUEL JETT PUMP

S 864-137-002
(20) For the discharge check valves in the right auxiliary fuel tank, do the steps that follow:
(a) Remove the DO-NOT-CLOSE tag and close this circuit breaker on the P6 panel:
1) 6F21, R FUEL OVRD PUMP

BOEING PROPRIETARY - Copyright (C) - Unpublished Work - See title page for details.

(b) Remove the DO-NOT-CLOSE tag and close this circuit breaker on the P11 panel:
1) 11M22, R FUEL JTSN CONT

(c) Remove the DO-NOT-CLOSE tag and close this circuit breaker on the P37 panel:
1) 37F4 or 37G4, R FUEL JETT PUMP

S 714-138-002

(21) Do the Test of the Left or Right Override/Jettison Pump procedure (AMM 28-31-00/501).

TASK 28-22-05-004-139-002

8. Remove the Motive Flow and Screen Valve

A. References
(1) AMM 28-26-00/201, Defueling

B. Access
(1) Location Zones
531 Center Auxiliary Tank (Left)
631 Center Auxiliary Tank (Right)

(2) Access Panels
531AB Access Cover (Left)
631AB Access Cover (Right)

C. Procedure

S 654-140-002

(1) Defuel the applicable fuel tank (AMM 28-26-00/201).

S 864-141-002

(2) For the motive flow and screen valve in the left auxiliary fuel tank, do the steps that follow:
(a) Open this circuit breaker on the main power distribution panel, P6, and attach DO-NOT-CLOSE tag:
1) 6F15, L FUEL OVRD PUMP

BOEING PROPRIETARY - Copyright (C) - Unpublished Work - See title page for details.

(b) Open this circuit breaker on the overhead circuit breaker panel, P11, and attach DO-NOT-CLOSE tag:
1) 11M13, L FUEL JTSN CONT
(c) Open this circuit breaker on the left miscellaneous electrical equipment panel, P36, and attach DO-NOT-CLOSE tag:
1) 36F4 or 36G7, L FUEL JETT PUMP

S 864-142-002
(3) For the motive flow and screen valve in the right auxiliary fuel tank, do the steps that follow:
(a) Open this circuit breaker on the main power distribution panel, P6, and attach DO-NOT-CLOSE tag:
1) 6F21, R FUEL OVRD PUMP
(b) Open this circuit breaker on the overhead circuit breaker panel, P11, and attach DO-NOT-CLOSE tag:
1) 11M22, R FUEL JTSN CONT
(c) Open this circuit breaker on the right miscellaneous electrical equipment panel, P37, and attach DO-NOT-CLOSE tag:
1) 37F4 or 37G4, R FUEL JETT PUMP

S 014-143-002
(4) Hold the access cover (10) and remove the mounting bolts (9) (View B, Fig. 401).

S 014-144-002
(5) Lower the access cover (10) until the lanyard (6) holds the access cover (10).

S 034-145-002
(6) Remove the screws (67) on the motive flow and screen valve (3) (Fig. 404).

S 024-146-002
(7) Use the T-handle (70) and pull the motive flow and screen valve (3) down and out of the housing (1).

BOEING PROPRIETARY - Copyright (C) - Unpublished Work - See title page for details.

S 034-147-002
(8) Remove and discard the four O-rings (73, 74, 75, 76) from the motive flow and screen valve (3).

TASK 28-22-05-404-148-002
9. Install the Motive Flow and Screen Valve
A. Consumable Materials
(1) D00215 Fluorosilicone Grease, DC FS-1292
B. References
(1) AMM 12-11-01/301, Pressure Fueling
(2) AMM 28-31-00/501, Fuel Jettison System
C. Access
(1) Location Zones
531 Center Auxiliary Tank (Left)
631 Center Auxiliary Tank (Right)

(2) Access Panels
531AB Access Cover (Left)
631AB Access Cover (Right)

D. Procedure

S 434-149-002
(1) If the motive flow and screen valve (3) you install is not new, install four new O-rings (73, 74, 75, 76) on the motive flow and screen valve (3) (Fig. 404).

S 644-150-002
(2) Apply fluorosilicone grease, DC FS-1292, to the O-rings (73, 74, 75, 76) (Fig. 404).

S 424-151-002
(3) Put the motive flow and screen valve (3) in the housing (1).

S 434-152-002
(4) Install the screws (67) and washers (66) to attach the motive flow and screen valve (3) to the housing (1).

BOEING PROPRIETARY - Copyright (C) - Unpublished Work - See title page for details.

S 434-153-002
(5) Tighten the screws (67) to 20-22 pound-inches.

S 654-228-002
(6) Refuel the auxiliary fuel tank to a minimum of 21,700 lbs (9900 kgs) (AMM 12-11-01/301).

NOTE: This is the minimum fuel quantity necessary to make sure the seal surface for the override pump housing is covered and the override pumps are correctly primed with a pitch of 0 degrees and a roll of 0 degrees.

You can refuel each fuel tank by pressure fueling (AMM 12-11-01/301) or by tank to tank transfer (AMM 28-26-00/201).

S 214-155-002
(7) Look at the motive flow and screen valve (3) for fuel leaks.

S 414-156-002
(8) Put and hold the access cover (10) against the lower wing surface (View B, Fig. 401).
(a) Make sure the lanyard (6) is in the housing.

S 434-157-002
(9) Install the mounting bolts (9) on the access cover (10).

S 434-158-002
(10) Tighten the mounting bolts (9) to 20-22 pound-inches.

S 864-159-002
(11) For the motive flow and screen valve in the left auxiliary fuel tank, do the steps that follow:
(a) Remove the DO-NOT-CLOSE tag and close this circuit breaker on the P6 panel:
1) 6F15, L FUEL OVRD PUMP

BOEING PROPRIETARY - Copyright (C) - Unpublished Work - See title page for details.

(b) Remove the DO-NOT-CLOSE tag and close this circuit breaker on the P11 panel:
1) 11M13, L FUEL JTSN CONT
(c) Remove the DO-NOT-CLOSE tag and close this circuit breaker on the P36 panel:
1) 36F4 or 36G7, L FUEL JETT PUMP

S 864-160-002
(12) For the motive flow and screen valve in the right auxiliary fuel tank, do the steps that follow:
(a) Remove the DO-NOT-CLOSE tag and close this circuit breaker on the P6 panel:
1) 6F21, R FUEL OVRD PUMP
(b) Remove the DO-NOT-CLOSE tag and close this circuit breaker on the P11 panel:
1) 11M22, R FUEL JTSN CONT
(c) Remove the DO-NOT-CLOSE tag and close this circuit breaker on the P37 panel:
1) 37F4 or 37G4, R FUEL JETT PUMP

S 714-161-002
(13) Do the Test of the Left or Right Override/Jettison Pump procedure (AMM 28-31-00/501).

TASK 28-22-05-004-162-002
10. Remove the Motive Flow Screen
A. Access
(1) Location Zones
531 Center Auxiliary Tank (Left)
631 Center Auxiliary Tank (Right)

(2) Access Panels
531AB Access Cover (Left)
631AB Access Cover (Right)

BOEING PROPRIETARY - Copyright (C) - Unpublished Work - See title page for details.

B. Procedure

S 014-163-002
(1) Hold the access cover (10) and remove the mounting bolts (9) (View B, Fig. 401).

S 014-164-002
(2) Lower the access cover (10) until the lanyard (6) holds the access cover (10).

S 034-165-002

CAUTION: REMOVE ALL OF THE LOCKWIRE FROM THE MOTIVE FLOW AND SCREEN VALVE (3). IF YOU DO NOT REMOVE ALL OF THE LOCKWIRE, THREAD GALLING CAN OCCUR.

(3) Remove the lockwire from the motive flow and screen valve (3) (Fig. 404).

S 024-166-002

CAUTION: USE ONLY MANUAL PRESSURE ON THE T-HANDLE (70). IF YOU DO NOT USE MANUAL PRESSURE, DAMAGE TO THE VALVE STEM (69) CAN OCCUR.

(4) Remove the T-handle (70) of the motive flow screen (72) from the motive flow and screen valve (3).

NOTE: The valve stem (69) and motive flow screen (72) are attached to the T-handle (70).

S 024-167-002
(5) Remove the motive flow screen (72) from the T-handle (70).

S 034-168-002
(6) Discard the O-ring (71).

BOEING PROPRIETARY - Copyright (C) - Unpublished Work - See title page for details.

S 284-169-002
(7) Make sure you keep the wavy spring washer (68).

TASK 28-22-05-404-170-002
11. Install the Motive Flow Screen
A. Consumable Materials
(1) D00215 Fluorosilicone Grease, DC FS-1292
(2) D50226 Lubricant - Sandstrom 28A Solid Film, MIL-PRF-46147C
B. Access
(1) Location Zones
531 Center Auxiliary Tank (Left)
631 Center Auxiliary Tank (Right)

(2) Access Panels
531AB Access Cover (Left)
631AB Access Cover (Right)

C. Procedure

S 644-171-002
(1) Apply fluorosilicone grease, DC FS-1292, to the O-ring (71) (Fig. 404).

S 434-172-002
(2) Install the O-ring (71) around the threads of the T-handle (70).

S 644-173-002
(3) Apply the solid film lubricant on the threads of the T-handle (70).

S 424-174-002
(4) Put the wavy spring washer (68) in the T-handle (70), around the valve stem (69).

S 424-175-002
(5) Install the narrow end of the motive flow screen (72) in the T-handle (70), over the valve stem (69).

BOEING PROPRIETARY - Copyright (C) - Unpublished Work - See title page for details.

S 424-176-002
(6) Install the T-handle (70) in the motive flow and screen valve (3).

S 434-177-002
(7) Install the lockwire on the motive flow and screen valve (3).

S 414-178-002
(8) Put and hold the access cover (10) against the lower wing surface (View B, Fig. 401).
(a) Make sure the lanyard (6) is in the housing.

S 434-179-002
(9) Install the mounting bolts (9) on the access cover (10).

S 434-180-002
(10) Tighten the mounting bolts (9) to 20-22 pound-inches.

TASK 28-22-05-004-181-002

12. Remove the Shutoff Sleeve

A. References
(1) AMM 28-26-00/201, Defueling
(2) AMM 28-31-01/401, Jettison Pump

B. Access
(1) Location Zones
531 Center Auxiliary Tank (Left)
631 Center Auxiliary Tank (Right)

(2) Access Panels
531AB Access Cover (Left)
631AB Access Cover (Right)

C. Procedure

S 654-182-002
(1) Defuel the applicable fuel tank (AMM 28-26-00/201).

BOEING PROPRIETARY - Copyright (C) - Unpublished Work - See title page for details.

S 034-183-002
(2) Do the Remove the Override Pump or Remove the Jettison Pump procedure (AMM 28-31-01/401) for the applicable pump (2, 4).

S 024-184-002
(3) Remove the shoulder screws (80) from the shutoff sleeve (77) if it is necessary (Fig. 405).

NOTE: Do not discard the shoulder screws (80).

S 034-186-002
(4) Remove the screw (79) and the valve stop (78).

NOTE: Do not discard the screw (79).

S 024-185-002
(5) Remove the shutoff sleeve (77) from the housing (1).

S 034-187-002
(6) Remove the O-rings (81, 82) from the shutoff sleeve (77) and discard.

S 214-188-002
(7) Look at the struts of the shutoff sleeve (77) (Fig. 405).
(a) If one or more of the struts have less than the dimension shown, replace the shutoff sleeve (77).

TASK 28-22-05-404-189-002
13. Install the Shutoff Sleeve
A. Consumable Materials
(1) D00215 Fluorosilicone Grease, DC FS-1292
(2) B00415 3M Torque Paint EC1252-White or equivalent.

BOEING PROPRIETARY - Copyright (C) - Unpublished Work - See title page for details.

B. References
(1) AMM 28-31-01/401, Jettison Pump

C. Access
(1) Location Zones
531 Center Auxiliary Tank (Left)
631 Center Auxiliary Tank (Right)

(2) Access Panels
531AB Access Cover (Left)
631AB Access Cover (Right)

D. Procedure

S 434-190-002
(1) If the shutoff sleeve (77) you install is not new, install four new O-rings (81, 82) on the shutoff sleeve (77) (Fig. 405).

S 644-191-002
(2) Apply fluorosilicone grease, DC FS-1292, to the O-rings (81, 82) (Fig. 405).

S 424-194-002
(3) Put and hold the shutoff sleeve (77) in the housing (1).

S 434-192-002
(4) Install the valve stop (78) and the screw (79).

S 434-193-002
(5) Tighten the screw (79) to 20-22 pound-inches.

S 424-195-002

CAUTION: MAKE SURE THE SHOULDER SCREWS (80) ARE INSTALLED ON THE SHUTOFF SLEEVE (77). IF THE SHOULDER SCREWS (80) ARE NOT INSTALLED, FUEL LEAKAGE COULD OCCUR WHEN YOU REMOVE THE OVERRIDE PUMP (4) OR THE JETTISON PUMP (2).

(6) Install the shoulder screws (80) on the shutoff sleeve (77) if it is necessary.

NOTE: The two shoulder screws (80) on the shutoff sleeve (77) are a necessary part of the shutoff sleeve (77). Do not install the shutoff sleeve (77) without the shoulder screws (80).

S 434-196-002
(7) Tighten the shoulder screws (80) to 20-22 pound-inches.

BOEING PROPRIETARY - Copyright (C) - Unpublished Work - See title page for details.

S 644-231-002

(8) Fill the heads of the shoulder screws with 3M torque paint EC1252-White or equivalent.

S 434-197-002

(9) Do the Install the Override Pump or Install the Jettison Pump procedure (AMM 28-31-01/401).

BOEING PROPRIETARY - Copyright (C) - Unpublished Work - See title page for details.

CENTER AUXILIARY TANK OVERRIDE PUMP - INSPECTION/CHECK

1. General
   A. This procdure contains a task to do an electrical bonding resistance check of the center auxiliary tank override pump.

   TASK 28-22-05-706-293-001
2. Center Auxiliary Tank Override Pump - Bonding Resistance Check (Fig. 601)
   A. Equipment
      (1) Bonding Meter - Use one of these:
         (a) Bonding Meter - T477W
             Avtron Manufacturing Co.
             Cleveland, OH
         (b) Bonding Meter - Model M1
             (Serial Number A000012 and subsequent)
             BCD Electronics Ltd.
             Vancouver, Canada
   B. References
      (1) SWPM 20-20-00, Electrical Bonding and Grounds

   C. Access
      (1) Location Zones
            531 Center Auxiliary Tank (Left)
            631 Center Auxiliary Tank (Right)

      (2) Access Panels
            531AB Access Cover (Left)
            631AB Access Cover (Right)

   D. Prepare for the Procedure

         S 016-005-001
      (1) For the left override pump, remove the left access cover, 531AB.
         (a) Hold the access cover and remove the mounting bolts.

            NOTE: It is not necessary to removethe mounting ring or the gasket.

BOEING PROPRIETARY - Copyright (C) - Unpublished Work - See title page for details.

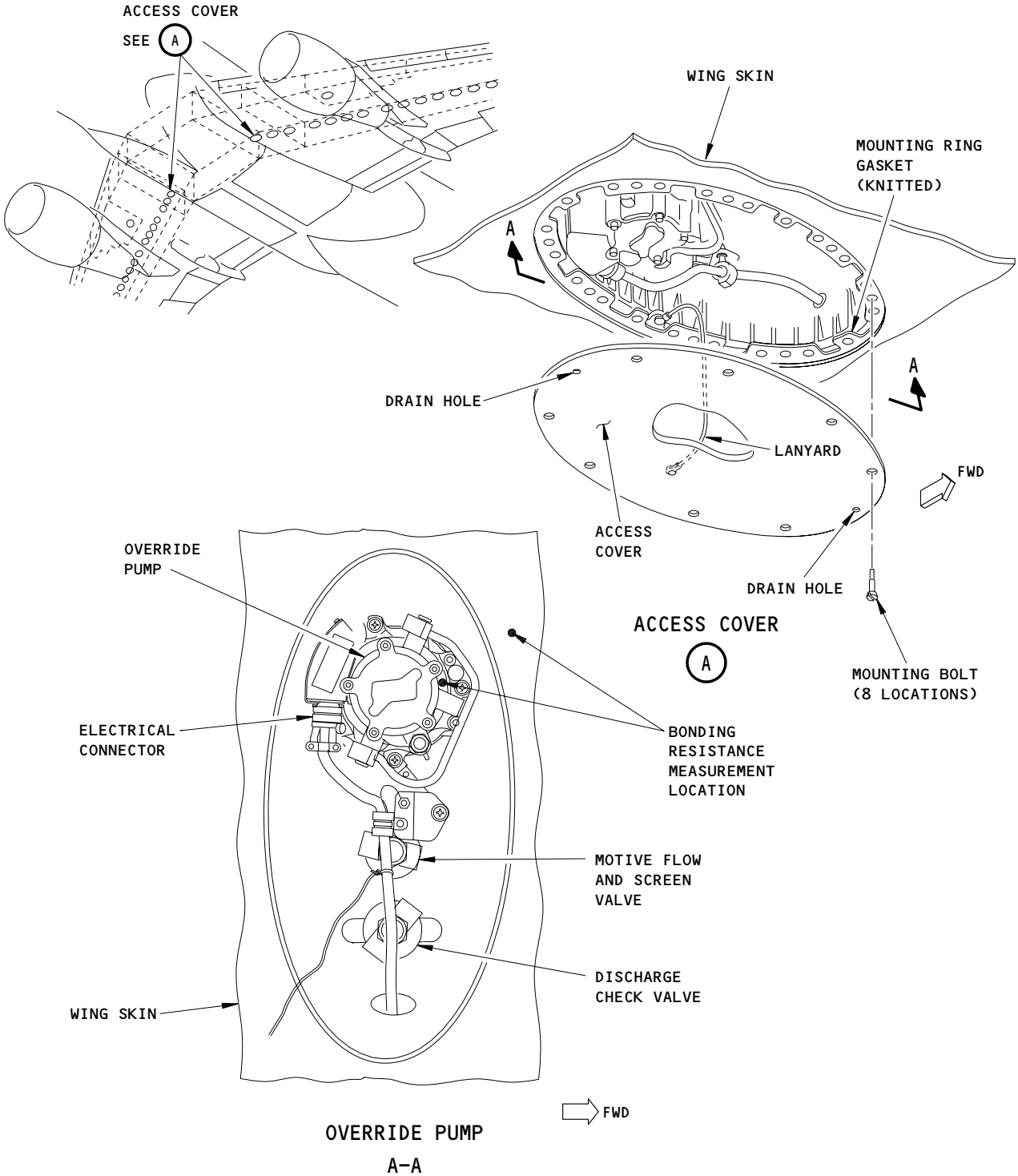

Override Pump Inspection
Figure 601

BOEING PROPRIETARY - Copyright (C) - Unpublished Work - See title page for details.

(b) Lower the access cover until the lanyard holds the access cover.

S 016-006-001

(2) For the right override pump, remove the right access cover, 631AB.

(a) Hold the access cover and remove the mounting bolts.

NOTE: It is not necessary to remove the mounting ring or the gasket.

(b) Lower the access cover until the lanyard holds the access cover.

E. Bonding Resistance Check

S 766-295-001

(1) Measure the bonding resistance between the override pump and the wing structure (SWPM 20-20-00).

(a) Make sure the resistance is 0.65 milliohm (0.00065 ohm) or less.

F. Put the Airplane Back to Its Usual Condition

S 416-297-001

(1) Install the left access cover, 531AB.

(a) Put and hold the access cover against the lower wing surface.

1) Make sure the lanyard is in the fuel tank.

(b) Install the mounting bolts on the access cover.

S 416-296-001

(2) Install the right access cover, 631AB.

(a) Put and hold the access cover against the lower wing surface.

1) Make sure the lanyard is in the fuel tank.

(b) Install the mounting bolts on the access cover.

BOEING PROPRIETARY - Copyright (C) - Unpublished Work - See title page for details.

OVERRIDE/JETTISON PUMP - INSPECTION/CHECK

1. General
   A. This procedure contains a task to do an electrical bonding resistance check of the override/jettison pump.

   TASK 28-22-05-706-210-002
2. Override/Jettison Pump - Bonding Resistance Check (Fig. 601)
   A. Equipment
      (1) Bonding Meter - Use one of these:
         (a) Bonding Meter - T477W
             Avtron Manufacturing Co.
             Cleveland, OH
         (b) Bonding Meter - Model M1
             (Serial Number A000012 and subsequent)
             BCD Electronics Ltd.
             Vancouver, Canada
   B. References
      (1) SWPM 20-20-00, Electrical Bonding and Grounds
   C. Access
      (1) Location Zones
             531 Center Auxiliary Tank (Left)
             631 Center Auxiliary Tank (Right)

      (2) Access Panels
             531AB Access Cover (Left)
             631AB Access Cover (Right)

   D. Prepare for the Procedure

         S 016-004-002
      (1) Remove the applicable left or right tank access cover, 531AB or 631AB.
         (a) Hold the access cover and remove the mounting bolts.

             NOTE: It is not necessary to remove the mounting ring or the gasket.

BOEING PROPRIETARY - Copyright (C) - Unpublished Work - See title page for details.

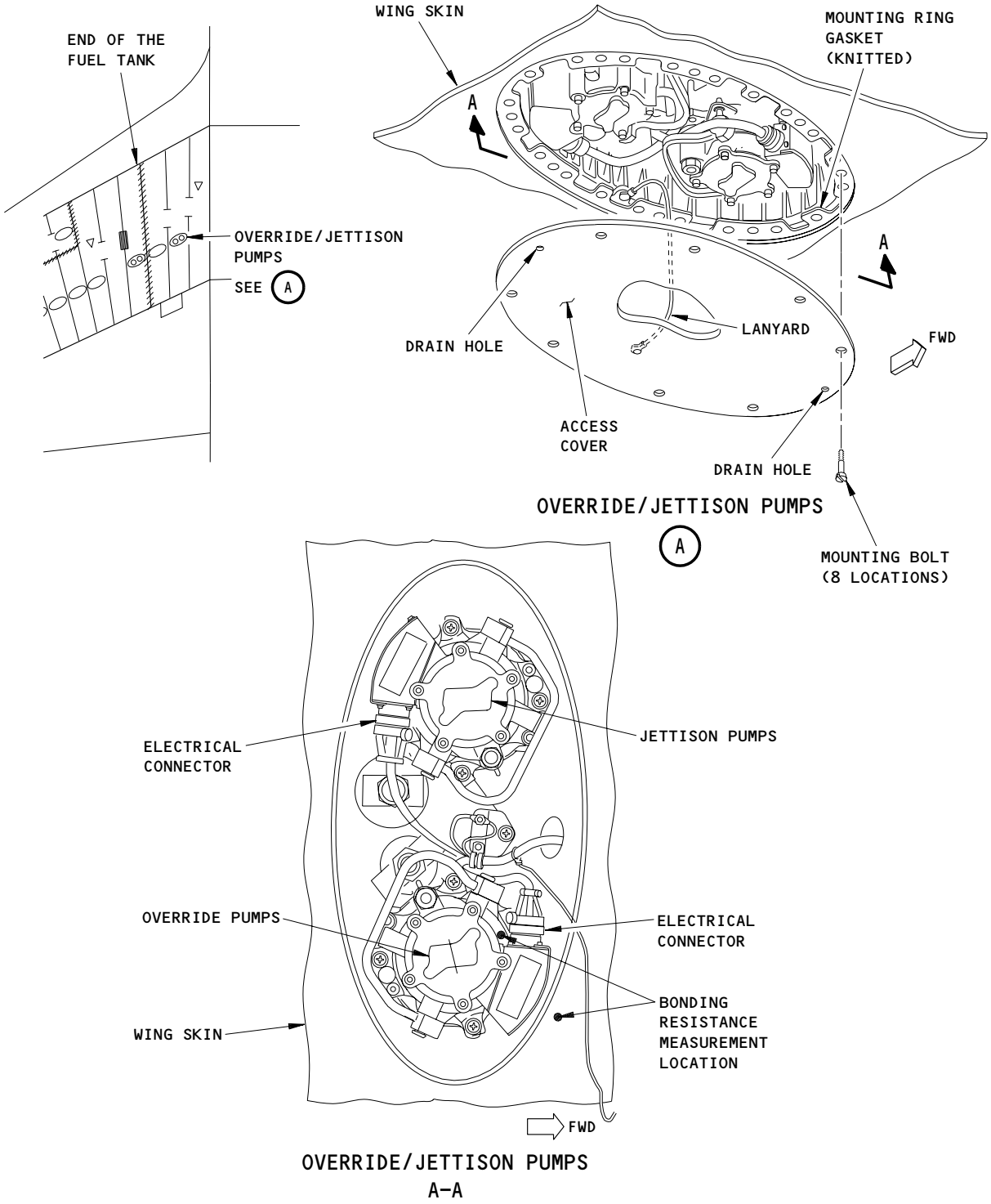

Override/Jettison Pump Inspection
Figure 601

BOEING PROPRIETARY - Copyright (C) - Unpublished Work - See title page for details.

(b) Lower the access cover until the lanyard holds the access cover.

E. Bonding Resistance Check

S 766-214-002

(1) Measure the bonding resistance between the override pump and the wing structure and between the jettison pump and the wing structure (SWPM 20-20-00).

(a) Make sure the resistance is 0.65 milliohm (0.00065 ohm) or less.

F. Put the Airplane Back to Its Usual Condition

S 416-211-002

(1) Install the applicable left or right tank access cover, 531AB or 631AB.

(a) Put and hold the access cover against the lower wing surface.

1) Make sure the lanyard is in the fuel tank.

(b) Install the mounting bolts on the access cover.

BOEING PROPRIETARY - Copyright (C) - Unpublished Work - See title page for details.

AUTOMATIC SUMPING JET PUMPS - REMOVAL/INSTALLATION

1. General
   A. Two automatic sumping jet pumps are installed on rib 3 in each main fuel tank. One automatic sumping jet pump is installed on rib 2 in the left and the right compartment of the auxiliary fuel tank. All the automatic sumping jet pumps are the same and contain a housing and a pump unit.
   B. All of the pump units can be removed from in the auxiliary fuel tank.
   C. This procedure contains four tasks. The first task removes the pump unit of the automatic sumping jet pump. The second task installs the pump unit of the automatic sumping jet pump. The third task removes the housing of the automatic sumping jet pump. The fourth task installs the housing of the automatic sumping jet pump.

TASK 28-22-06-004-024

2. Remove the Pump Unit of the Automatic Sumping Jet Pump (Fig. 401)
   A. References
      (1) AMM 28-11-00/201, Fuel Tanks
      (2) AMM 28-11-02/401, Auxiliary Tank Access Door
      (3) AMM 28-26-00/201, Defueling
   B. Access
      (1) Location Zones
          531 Center Auxiliary Tank (Left)
          631 Center Auxiliary Tank (Right)

      (2) Access Panels
          531BB Auxiliary Tank Access Door (Left)
          631BB Auxiliary Tank Access Door (Right)

   C. Procedure

      S 654-025
      (1) Defuel the auxiliary fuel tank (AMM 28-26-00/201).

      S 654-001
      (2) Drain and purge the auxiliary fuel tank (AMM 28-11-00/201).

      S 014-002
      (3) Remove the left or right auxiliary tank access door, 531BB or 631BB (AMM 28-11-02/401).

      S 944-026

      WARNING: OBEY THE FUEL TANK ENTRY PRECAUTIONS. FAILURE TO OBEY THE FUEL TANK ENTRY PRECAUTIONS COULD CAUSE INJURY TO PERSONS OR DAMAGE TO EQUIPMENT.

      (4) Obey the fuel tank entry precautions (AMM 28-11-00/201).

BOEING PROPRIETARY - Copyright (C) - Unpublished Work - See title page for details.

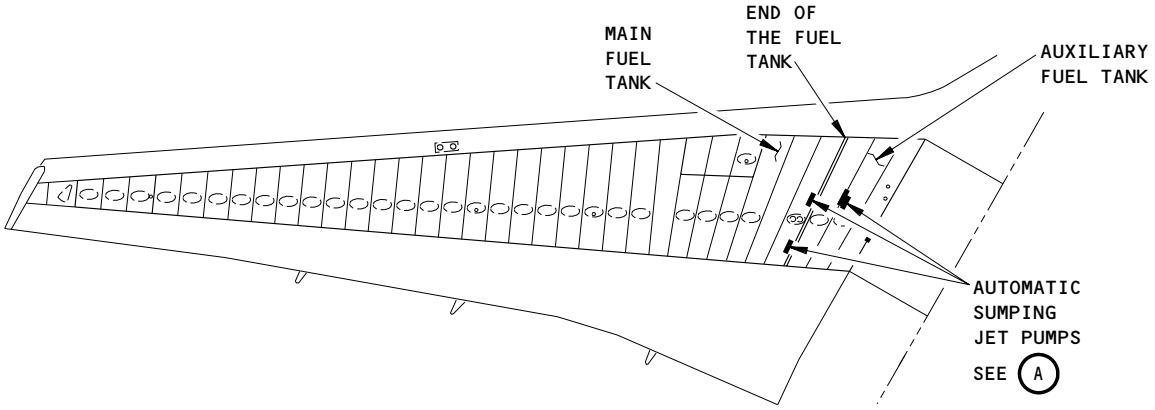

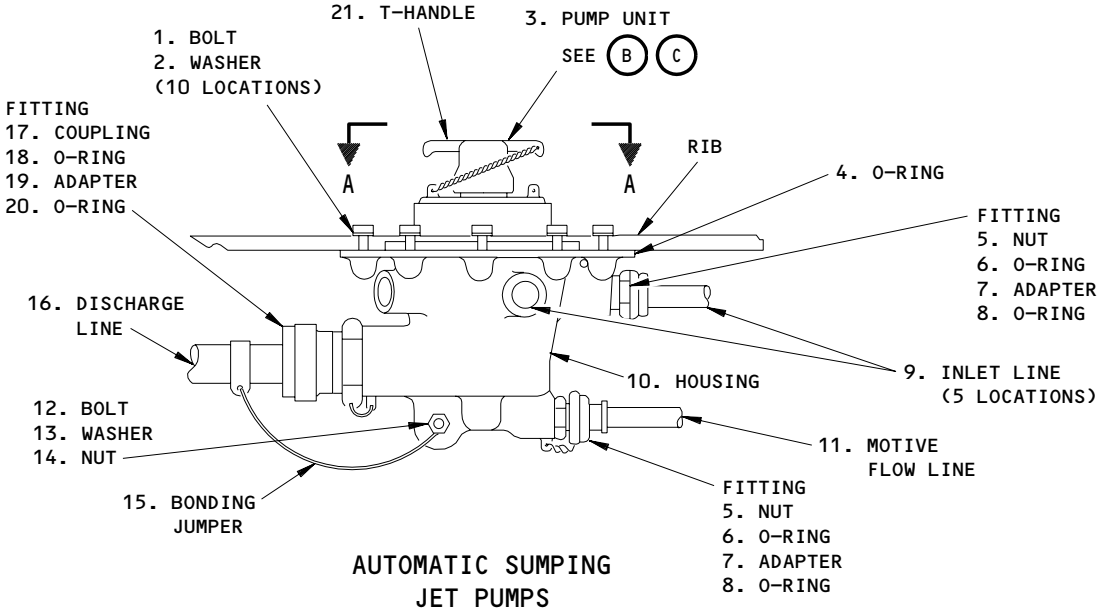

AUTOMATIC SUMPING
JET PUMPS
(TOP VIEW)

A

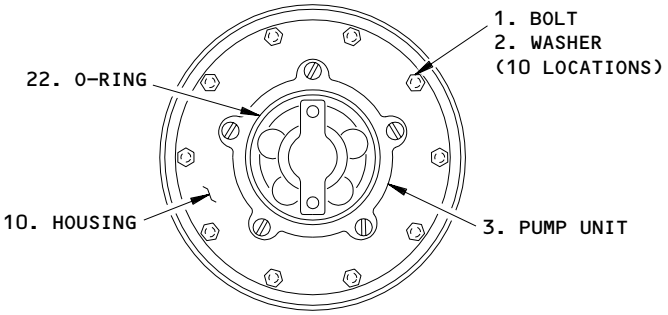

A-A

Automatic Sumping Jet Pumps Installation
Figure 401 (Sheet 1)

BOEING PROPRIETARY - Copyright (C) - Unpublished Work - See title page for details.

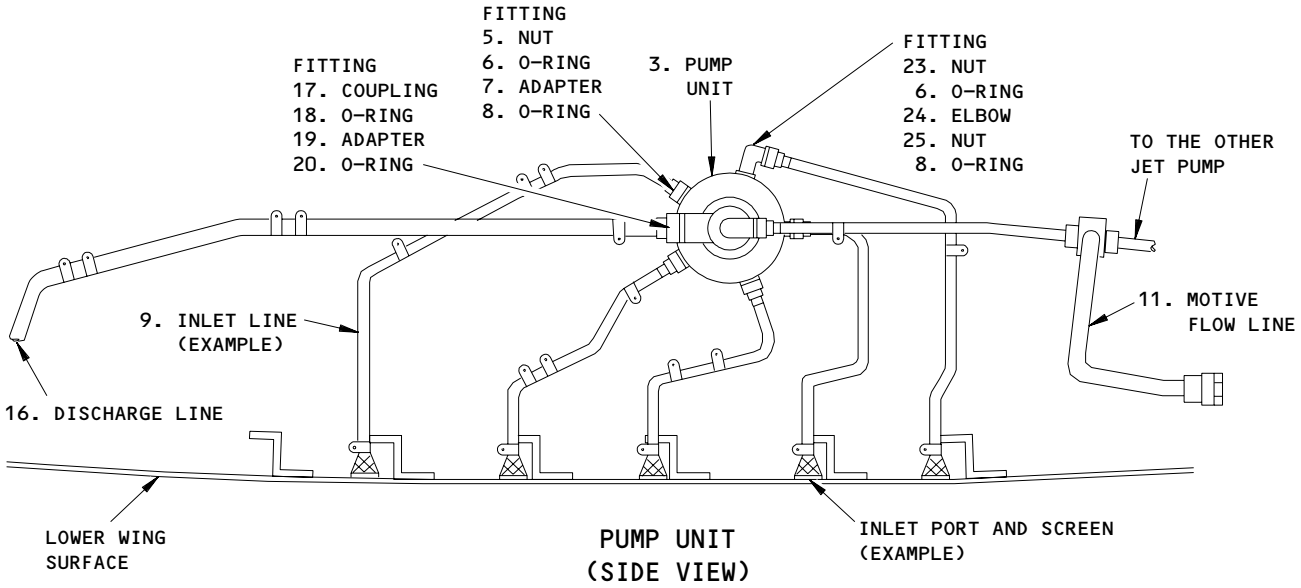

PUMP UNIT
(SIDE VIEW)

B

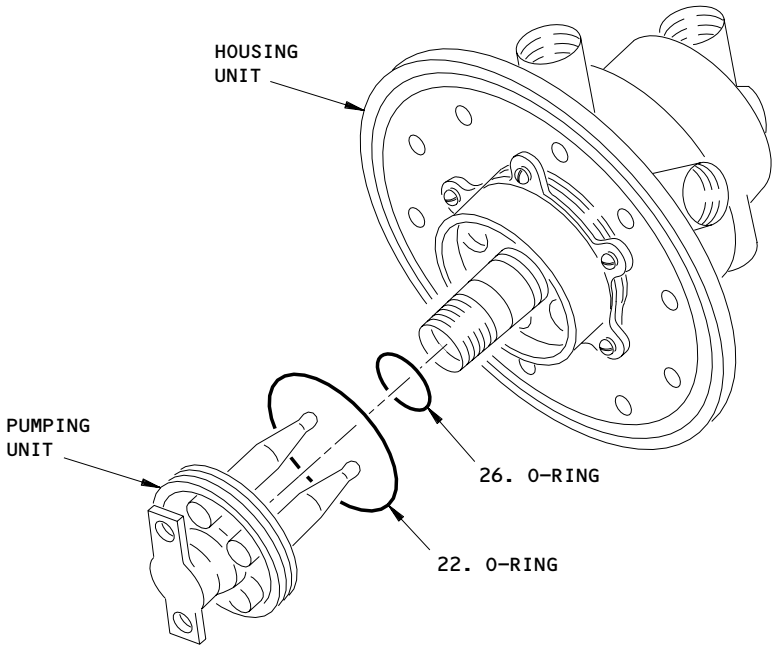

AUTOMATIC SUMPING JET PUMPS

C

Automatic Sumping Jet Pumps Installation
Figure 401 (Sheet 2)

BOEING PROPRIETARY - Copyright (C) - Unpublished Work - See title page for details.

S 014-027
(5) Go into the auxiliary fuel tank.

S 014-028
(6) Get access to the pump unit (3).

S 034-029
(7) Turn the T-handle (21) on the pump unit (3) in the counterclockwise direction (View A).

S 024-030
(8) Remove the pump unit (3) from the housing (10).

S 034-032
(9) Discard the O-ring (22) (View A-A).

S 034-064
(10) Discard the O-ring (26) (View C).

TASK 28-22-06-404-062

3. Install the Pump Unit of the Automatic Sumping Jet Pump (Fig. 401)

A. Parts

AMM			AIPC		
FIG	ITEM	NOMENCLATURE	SUBJECT	FIG	ITEM
401	3	Automatic Sumping Jet Pump	28-22-02	01	230, 231
				05	245
				10	245
				15	210
				25	170
				30	205
				35	135
					245
				36	55, 56
					170,171
	22	O-ring (Packing)		01	232
				15	145
				25	125
				30	35
				35	595
					230
				36	57
					172
	26	O-ring (Packing, M25988-1-115)		36	66, 182

BOEING PROPRIETARY - Copyright (C) - Unpublished Work - See title page for details.

B. References
(1) AMM 12-11-01/301, Fuel Tank Pressure Fueling
(2) AMM 28-11-00/201, Fuel Tanks
(3) AMM 28-11-02/401, Auxiliary Tank Access Door

C. Access
(1) Location Zones
531 Center Auxiliary Tank (Left)
631 Center Auxiliary Tank (Right)

(2) Access Panels
531BB Auxiliary Tank Access Door (Left)
631BB Auxiliary Tank Access Door (Right)

D. Procedure

S 944-033

WARNING: OBEY THE FUEL TANK ENTRY PRECAUTIONS. FAILURE TO OBEY THE FUEL TANK ENTRY PRECAUTIONS COULD CAUSE INJURY TO PERSONS OR DAMAGE TO EQUIPMENT.

(1) Obey the fuel tank entry precautions (AMM 28-11-00/201).

S 014-003
(2) Go into the auxiliary fuel tank.

S 434-004
(3) Install a new O-ring (22) in the groove on the pump unit (3) (View A-A).

S 434-065
(4) Install a new O-ring (26) in the groove on the housing unit (View C).

S 424-034
(5) Put the pump unit (3) in its position in the housing (10) (View A).

S 434-035
(6) Turn the T-handle (21) on the pump unit (3) in the clockwise direction.

S 434-036
(7) Install the lockwire on the T-handle (21).

S 094-005
(8) Remove the purging and ventilating equipment from the fuel tank (AMM 28-11-00/201).

S 414-006
(9) Install the left or right auxiliary tank access door, 531BB or 631BB (AMM 28-11-02/401).

BOEING PROPRIETARY - Copyright (C) - Unpublished Work - See title page for details.

S 654-007
(10) Refuel the auxiliary fuel tank (AMM 12-11-01/301).

S 214-037
(11) Make sure there are no fuel leaks.

TASK 28-22-06-004-038
4. Remove the Housing of the Automatic Sumping Jet Pump (Fig. 401)
A. References
(1) AMM 28-11-00/201, Fuel Tanks
(2) AMM 28-11-01/401, Main Tank Access Door
(3) AMM 28-11-02/401, Auxiliary Tank Access Door
(4) AMM 28-26-00/201, Defueling
B. Access
(1) Location Zones
531 Center Auxiliary Tank (Left)
532 Main Tank - Inboard of Rib No. 10 (Left)
631 Center Auxiliary Tank (Right)
632 Main Tank - Inboard of Rib No. 10 (Right)

(2) Access Panels
531BB Auxiliary Tank Access Door (Left)
532BB Main Tank Access Door (Left)
631BB Auxiliary Tank Access Door (Right)
632BB Main Tank Access Door (Right)

C. Procedure

S 654-039
(1) Defuel the auxiliary fuel tank and the applicable left or right main fuel tank (AMM 28-26-00/201).

S 654-008
(2) Drain and purge the auxiliary fuel tank and the applicable left or right main fuel tank (AMM 28-11-00/201).

S 014-009
(3) For the housings (10) in the auxiliary fuel tank, remove the left or right auxiliary tank access door, 531BB or 631BB (AMM 28-11-02/401).

S 014-010
(4) For the housings (10) in the main fuel tanks, remove the left or right main tank access door, 532BB or 632BB (AMM 28-11-01/401).

BOEING PROPRIETARY - Copyright (C) - Unpublished Work - See title page for details.

S 944-040

WARNING: OBEY THE FUEL TANK ENTRY PRECAUTIONS. FAILURE TO OBEY THE FUEL TANK ENTRY PRECAUTIONS COULD CAUSE INJURY TO PERSONS OR DAMAGE TO EQUIPMENT.

(5) Obey the fuel tank entry precautions (AMM 28-11-00/201).

S 014-041
(6) Go into the fuel tank.

S 014-042
(7) Get access to the housing (10).

S 034-011
(8) Remove the bolt (12), washer (13) and nut (14) to disconnect the bonding jumper (15) from the housing (10) (View A).

S 034-043
(9) Loosen the fitting [nut (5), O-ring (6), adapter (7) and O-ring (8)] between the housing (10) and the motive flow line (11).

S 034-044
(10) Loosen the fitting [coupling (17), O-ring (18), adapter (19) and O-ring (20)] between the housing (10) and the discharge line (17) (View B).

S 034-045
(11) Loosen the fittings [nut (5), O-ring (6), adapter (7) and O-ring (8)] between the housing (10) and the inlet lines (9) (4 locations).

S 034-046
(12) Loosen the fitting [nut (23), O-ring (6), elbow (24), nut (25) and O-ring (8)] between the housing (10) and the inlet line (9) (1 location).

S 024-012
(13) Remove the mounting bolts (1) and washers (2) that attach the housing (10) to the rib (View A).

S 024-047
(14) Remove the housing (10).

S 034-048
(15) Discard the O-ring (4).

S 034-013
(16) Remove the fittings from the housing (10).

BOEING PROPRIETARY - Copyright (C) - Unpublished Work - See title page for details.

TASK 28-22-06-404-014

5. Install the Housing of the Automatic Sumping Jet Pump (Fig. 401)

A. Parts

AMM			AIPC		
FIG	ITEM	NOMENCLATURE	SUBJECT	FIG	ITEM
401	4	O-ring (Packing)	28-22-02	01	225
				05	165
				10	165
				30	140
				35	105, 230
				36	45, 165
	6	O-ring (Packing)	28-22-07	10	316,680
				12	337
				14	460
	8	O-ring (Packing)		10	321,685
				12	340
				14	450
	10	Automatic Sumping Jet Pump	28-22-02	01	230
				05	245
				10	245
				15	210
				25	170
				30	205
				35	135, 245
				36	55, 17
	18	O-ring (Packing)	28-22-07	10	308
				12	334
				14	465
	20	O-ring (Packing)		10	311
				12	331
				14	445

B. References
(1) AMM 12-11-01/301, Fuel Tank Pressure Fueling
(2) AMM 28-11-00/201, Fuel Tanks
(3) AMM 28-11-01/401, Main Tank Access Door
(4) AMM 28-11-02/401, Auxiliary Tank Access Door

C. Access
(1) Location Zones
531 Center Auxiliary Tank (Left)
532 Main Tank - Inboard of Rib No. 10 (Left)
631 Center Auxiliary Tank (Right)
632 Main Tank - Inboard of Rib No. 10 (Right)

BOEING PROPRIETARY - Copyright (C) - Unpublished Work - See title page for details.

(2) Access Panels
531BB Auxiliary Tank Access Door (Left)
532BB Main Tank Access Door (Left)
631BB Auxiliary Tank Access Door (Right)
632BB Main Tank Access Door (Right)

D. Procedure

S 434-049
(1) Put new O-rings (6, 8, 18, 20) in the fittings (View A).

S 434-015
(2) Install the fittings on the housing (10).

S 944-050

WARNING: OBEY THE FUEL TANK ENTRY PRECAUTIONS. FAILURE TO OBEY THE FUEL TANK ENTRY PRECAUTIONS COULD CAUSE INJURY TO PERSONS OR DAMAGE TO EQUIPMENT.

(3) Obey the fuel tank entry precautions (AMM 28-11-00/201).

S 014-016
(4) Go into the fuel tank (AMM 28-11-00/201).

S 214-017
(5) Make sure the surface on the rib that you install the housing (10) is clean.

S 434-018
(6) Install a new O-ring (4) in the groove on the housing (10).

S 424-052
(7) Put the housing (10) in position on the rib.

S 824-053
(8) Align the holes for the mounting bolts (1).

S 424-019
(9) Install the washers (2) and mounting bolts (1) to attach the housing (10) to the rib.

S 824-061
(10) Align the motive flow line (11), discharge line (16), and inlet lines (9) with the fittings on the housing (10).

S 434-054
(11) Tighten the fitting [nut (5), O-ring (6), adapter (7) and O-ring (8)] between the housing (10) and the motive line (11).

BOEING PROPRIETARY - Copyright (C) - Unpublished Work - See title page for details.

S 434-055
(12) Tighten the fitting [coupling (17), O-ring (18), adapter (19) and O-ring (20)] between the housing (10) and the discharge line (16).

S 434-056
(13) Tighten the fittings [nut (5), O-ring (6), adapter (7) and O-ring (8)] between the housing (10) and the inlet lines (9) (4 locations) (View B).

S 434-057
(14) Tighten the fitting [nut (23), O-ring (6), elbow (24), nut (25) and O-ring (8)] between the housing (10) and the inlet line (9) (1 location).

S 434-021
(15) Install the lockwire on the fittings (View A).

S 434-022
(16) Install the bolts (12), washers (13) and nuts (14) to connect the bonding jumper (15) to the housing (10).

S 414-058
(17) For the housings (10) in the main fuel tank, install the left or right main tank access door, 532BB or 632BB (AMM 28-11-01/401).

S 414-060
(18) For the housings (10) in the auxiliary fuel tank, install the left or right auxiliary tank access door, 531BB or 631BB (AMM 28-11-02/401).

S 654-023
(19) Refuel the fuel tanks (AMM 12-11-01/301).

S 214-059
(20) Make sure there are no fuel leaks.

BOEING PROPRIETARY - Copyright (C) - Unpublished Work - See title page for details.

FUEL LINE AND FITTINGS - REMOVAL/INSTALLATION

1. General
   A. This procedure gives examples of the removal and installation procedures for the fuel lines and fittings. There are three types of fittings: a flexible full coupling, flexible half coupling, and a rigid coupling.
   B. This procedure contains two tasks. The first task removes the fuel lines and fittings. The second task installs the fuel lines and fittings.
   C. For the damage limits for the fuel lines and fittings, refer to AMM 28-22-07/601.

TASK 28-22-07-004-001

2. Remove the Fuel Lines and Fittings
   A. References
      (1) AMM 06-44-00/201, Wings (Major Zones 500 and 600) Access Doors and Panels
      (2) AMM 28-11-00/201, Fuel Tanks
      (3) AMM 28-11-01/401, Main Tank Access Door
      (4) AMM 28-11-02/401, Auxiliary Tank Access Door
      (5) AMM 28-11-06/401, Engine Dry Bay Access Door
      (6) AMM 28-26-00/201, Defueling
      (7) AMM 54-53-01/401, Strut Pressure Relief and Access Doors
   B. Access
      (1) Location Zones

133	Wing Center Section (Left)
134	Wing Center Section (Right)
511	Leading Edge to Front Spar (Left)
531	Center Auxiliary Tank (Left)
532	Main Tank - Inboard of Rib No. 10 (Left)
541	Main Tank - Outboard of Rib No. 10 (Left)
533	Engine Dry Bay (Left)
611	Leading Edge to Front Spar (Right)
631	Center Auxiliary Tank (Right)
632	Main Tank - Inboard of Rib No. 10 (Right)
641	Main Tank - Outboard of Rib No. 10 (Right)
633	Engine Dry Bay (Right)

BOEING PROPRIETARY - Copyright (C) - Unpublished Work - See title page for details.

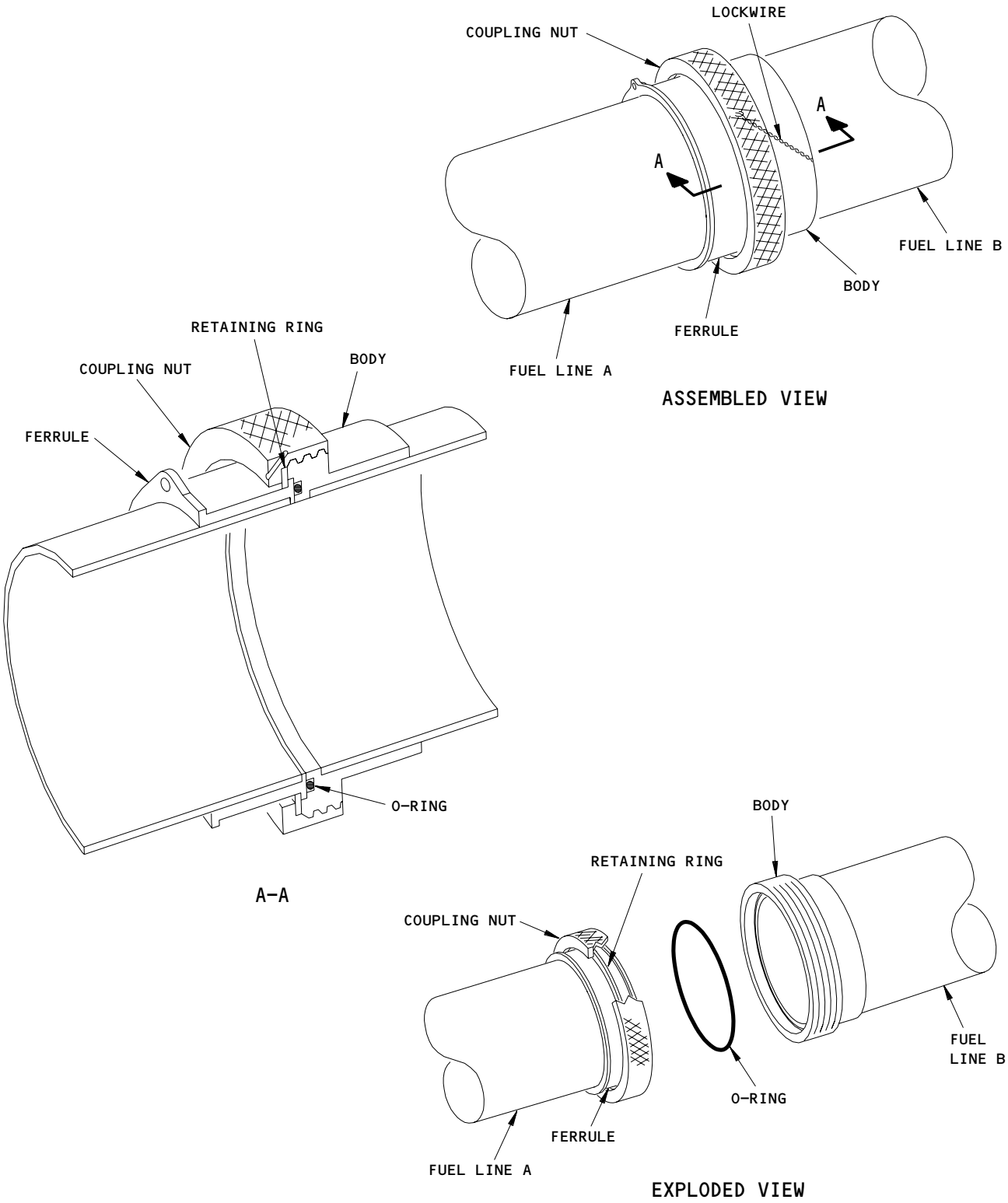

Rigid Coupling Installation
Figure 401

BOEING PROPRIETARY - Copyright (C) - Unpublished Work - See title page for details.

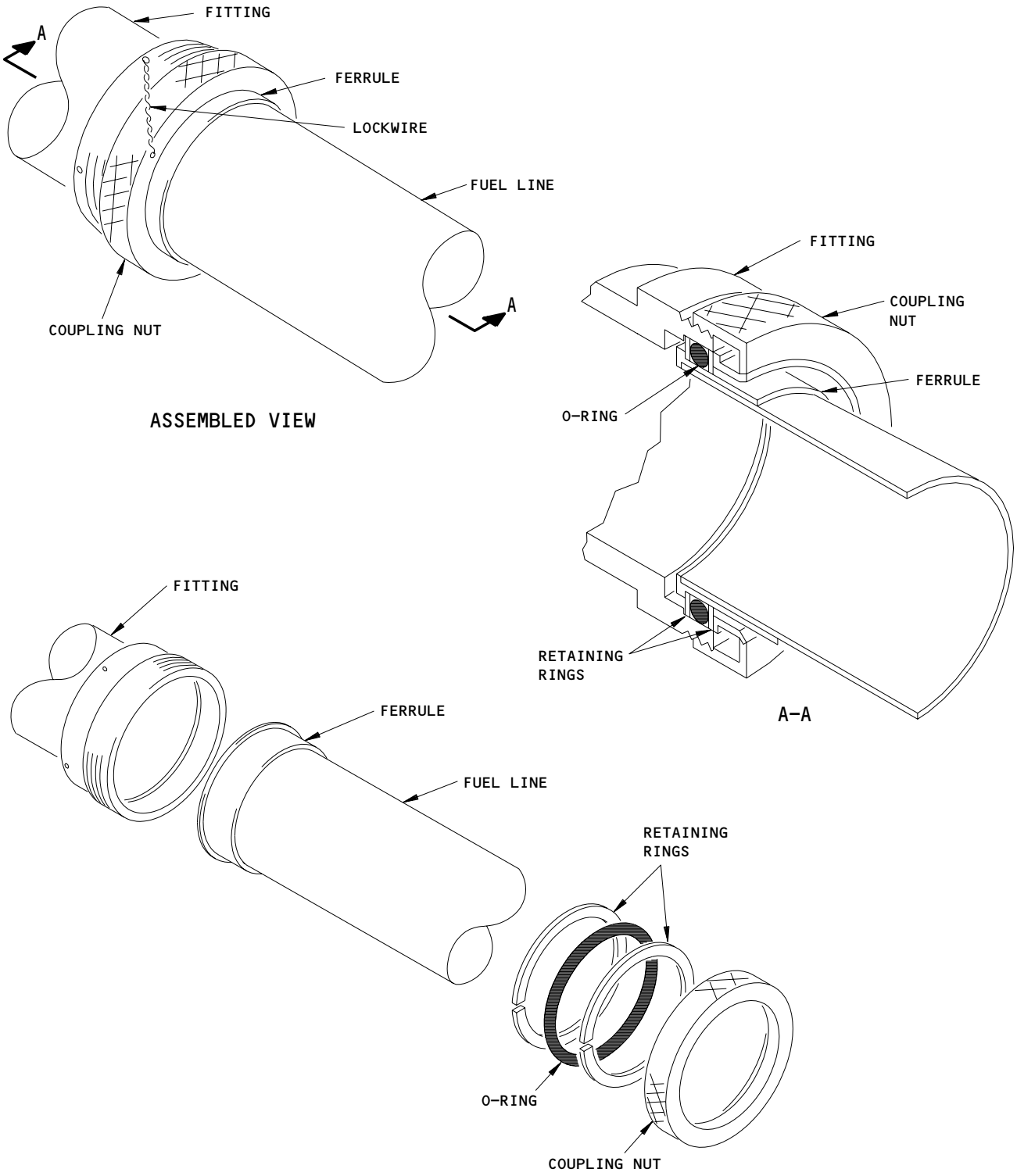

Flexible Half Coupling Installation
Figure 402

BOEING PROPRIETARY - Copyright (C) - Unpublished Work - See title page for details.

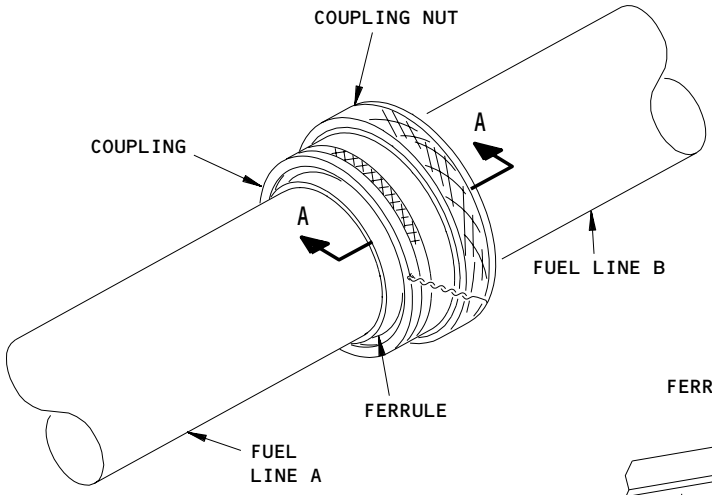

ASSEMBLED VIEW

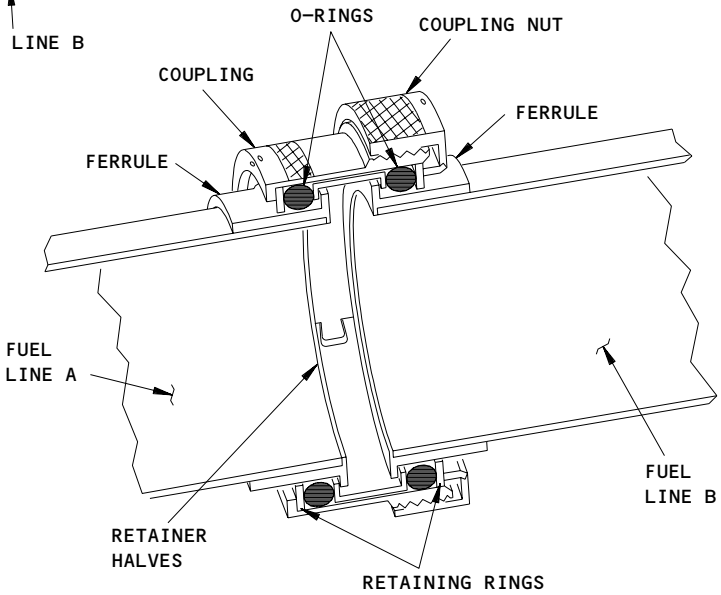

A-A

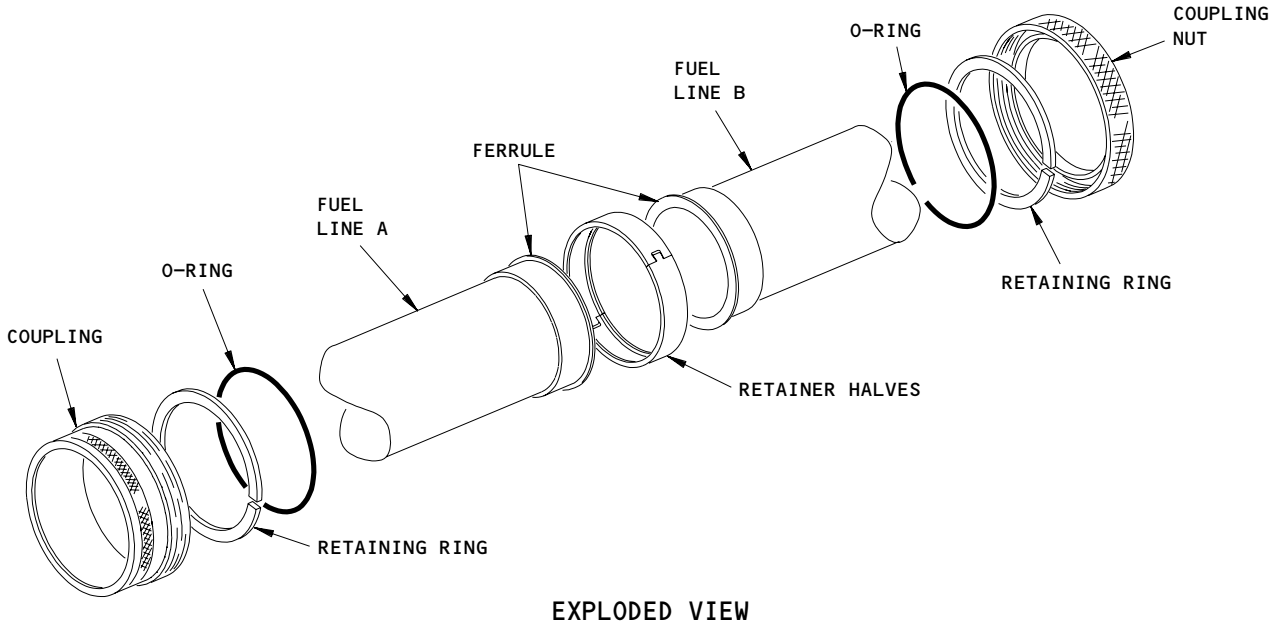

EXPLODED VIEW

Flexible Full Coupling Installation
Figure 403 (Sheet 1)

BOEING PROPRIETARY - Copyright (C) - Unpublished Work - See title page for details.

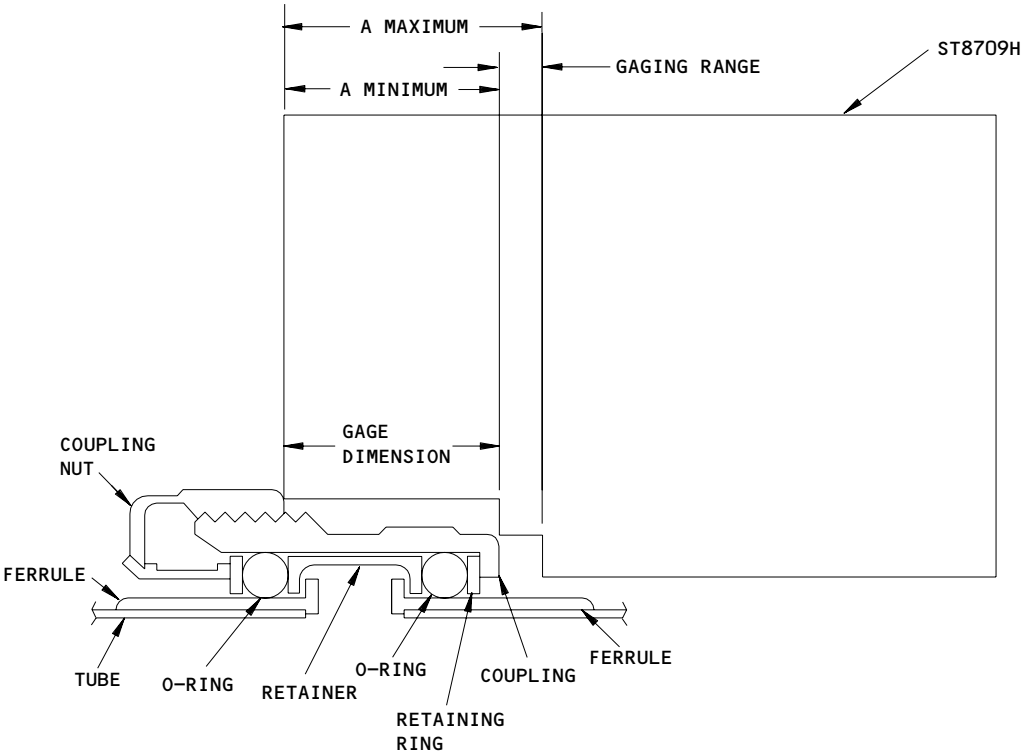

FLEXIBLE COUPLING WITH COUPLING GAGE

TUBE DIAMETER INCHES	BACC42R SIZE	MAX. GAGE	MIN. GAGE	GAGE NO. ST8709H
1/2	08	0.59	0.47	1
5/8	10	0.59	0.47	1
3/4	12	0.69	0.55	2
1	16	0.75	0.60	3
1-1/4	20	0.75	0.60	3
1-1/2	24	0.93	0.76	4
1-3/4	28	0.93	0.76	4
2	32	0.93	0.76	4

TUBE DIAMETER INCHES	BACC42R SIZE	MAX. GAGE	MIN. GAGE	GAGE NO. ST8709H
2-1/4	36	0.93	0.76	4
2-1/2	40	0.93	0.76	4
3	48	0.93	0.76	4
3-1/2	56	1.03	0.88	5
4	64	1.03	0.88	5
4-1/2	72	1.16	0.99	6
5	80	1.39	1.22	7
5-1/2	88	1.39	1.22	7

DIMENSIONAL REQUIREMENTS FOR ASSEMBLING FLEXIBLE FULL COUPLING

FLEXIBLE FULL COUPLING DIMENSIONS

Flexible Full Coupling Installation
Figure 403 (Sheet 2)

BOEING PROPRIETARY - Copyright (C) - Unpublished Work - See title page for details.

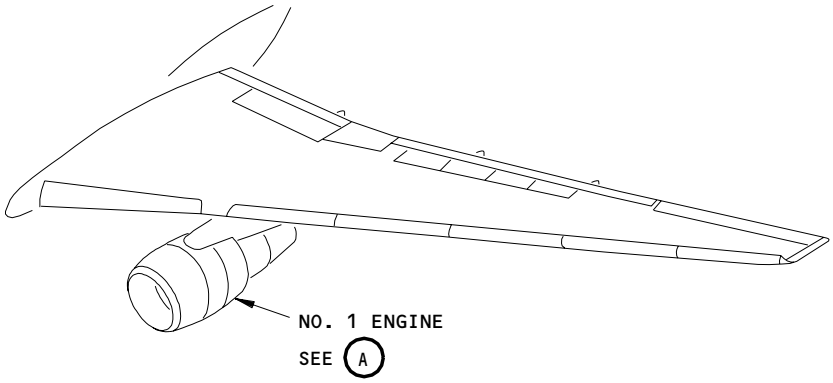

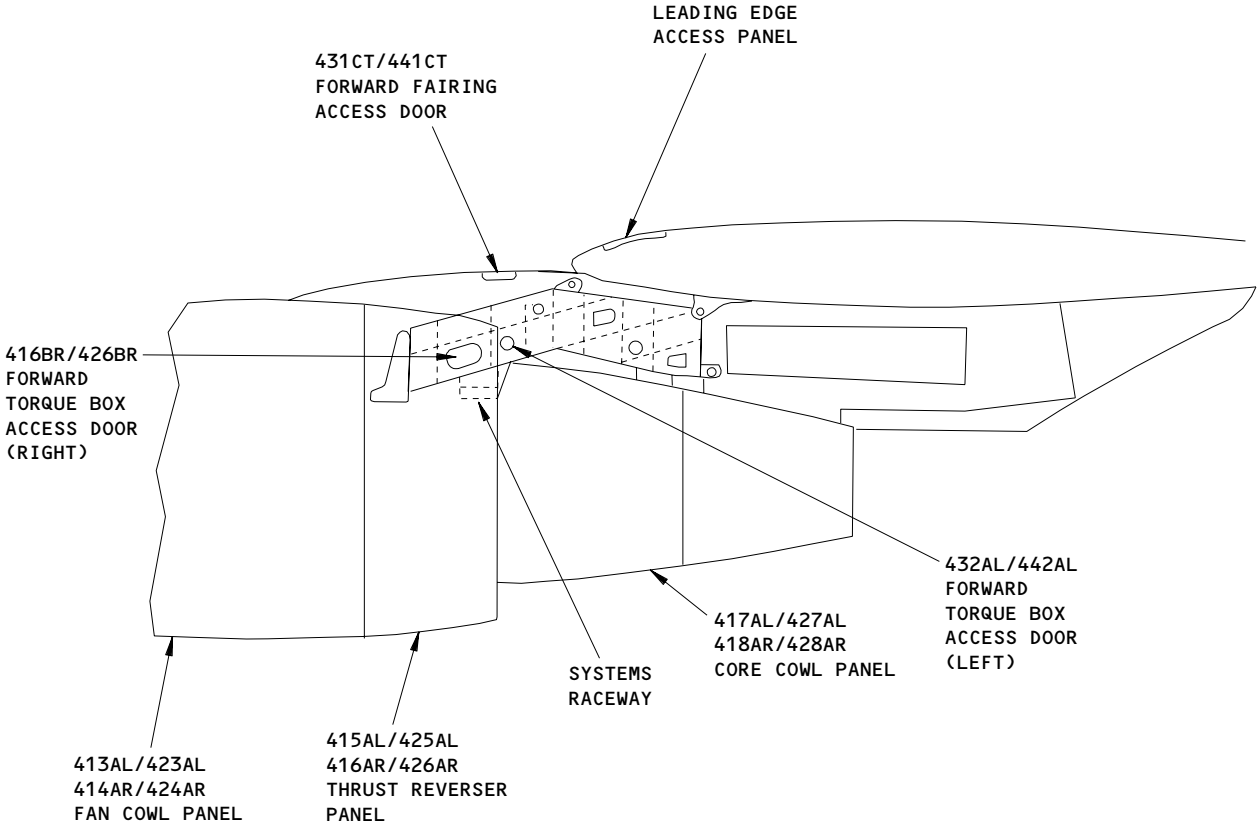

NO. 1 ENGINE
(NO. 2 ENGINE IS ALMOST THE SAME)

A

Fuel Line - Strut Access
Figure 404

BOEING PROPRIETARY - Copyright (C) - Unpublished Work - See title page for details.

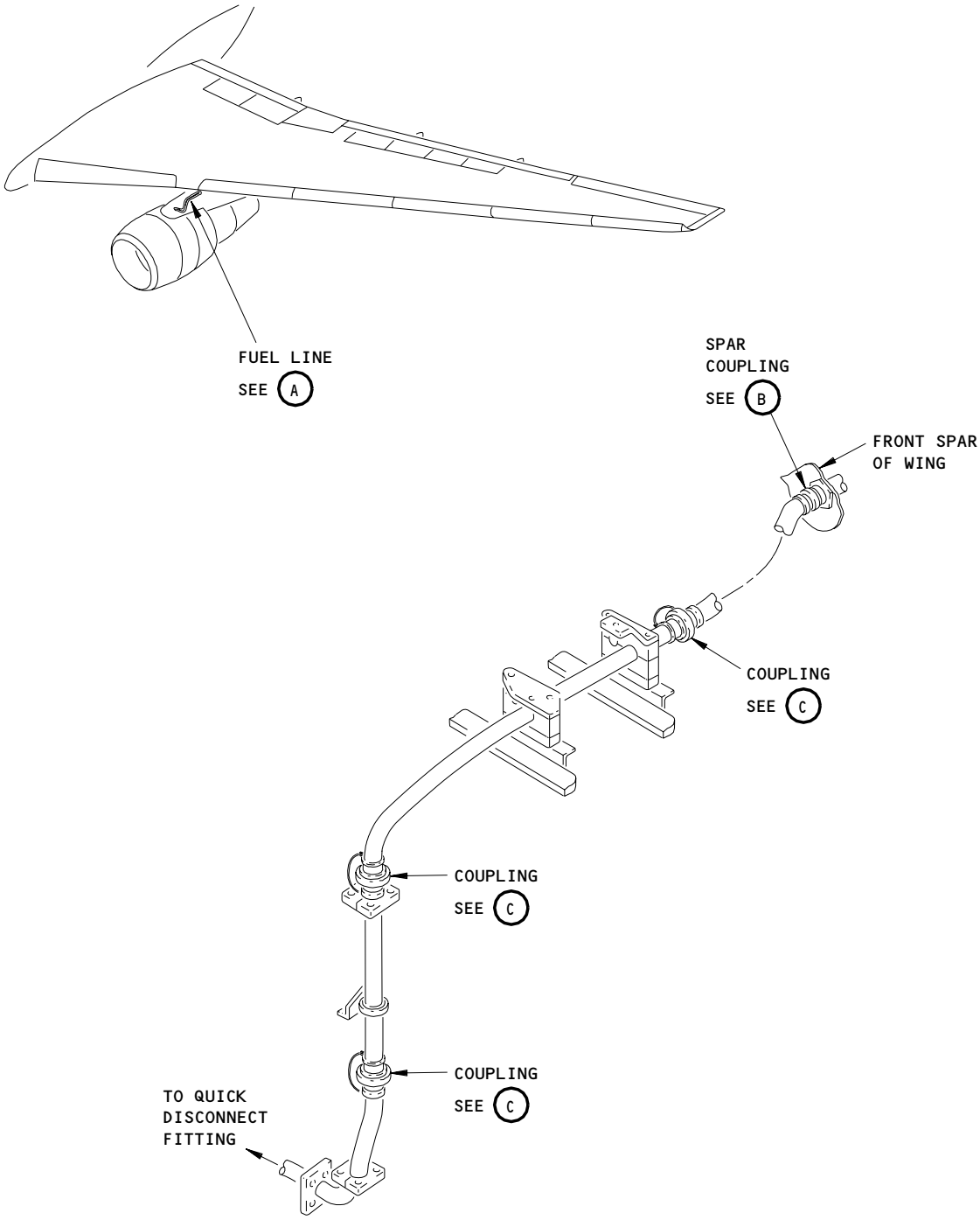

FUEL LINE
(LEFT SIDE IS SHOWN RIGHT SIDE IS ALMOST THE SAME)
A

Fuel Line - Nacelle Strut
Figure 405 (Sheet 1)

BOEING PROPRIETARY - Copyright (C) - Unpublished Work - See title page for details.

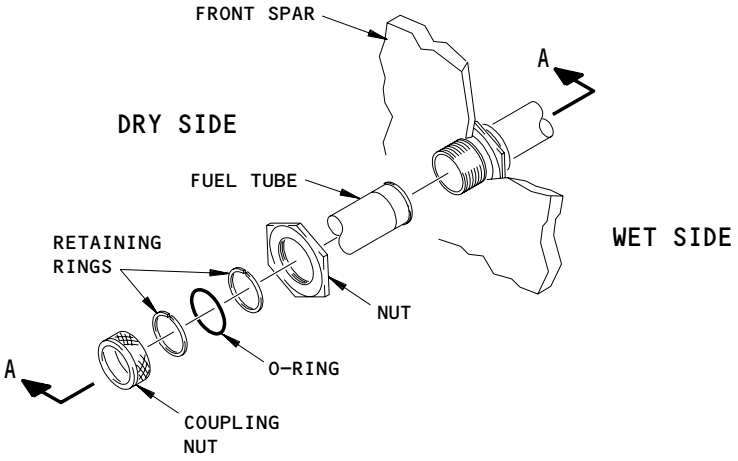

SPAR COUPLING

B

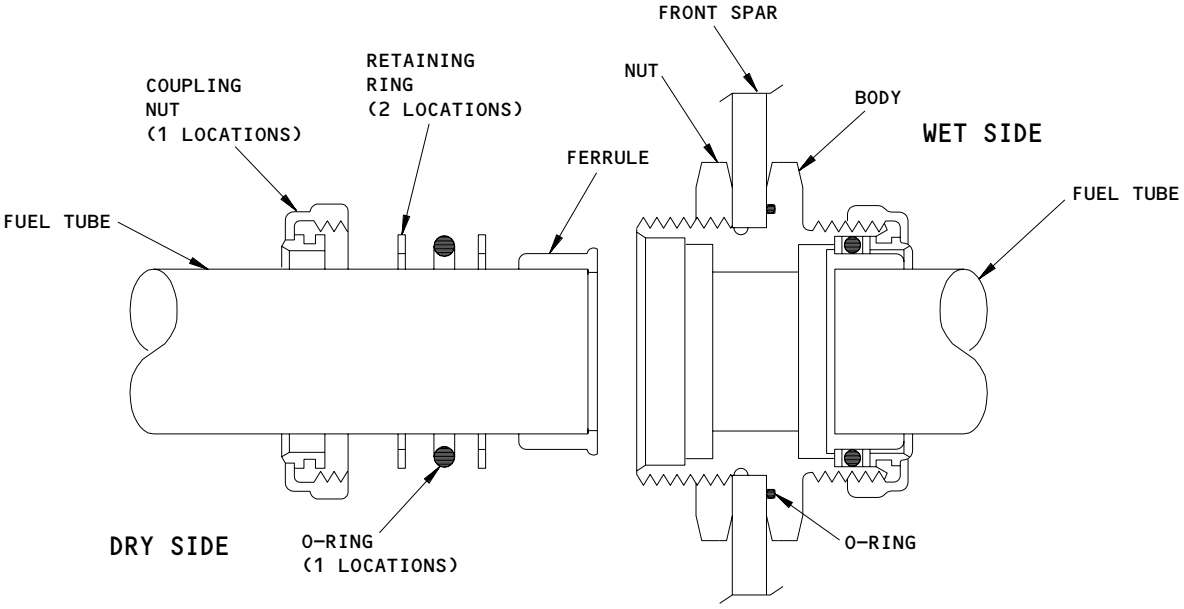

A-A

Fuel Line - Nacelle Strut
Figure 405 (Sheet 2)

BOEING PROPRIETARY - Copyright (C) - Unpublished Work - See title page for details.

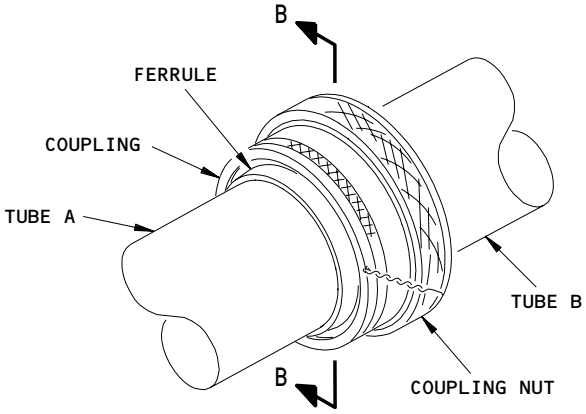

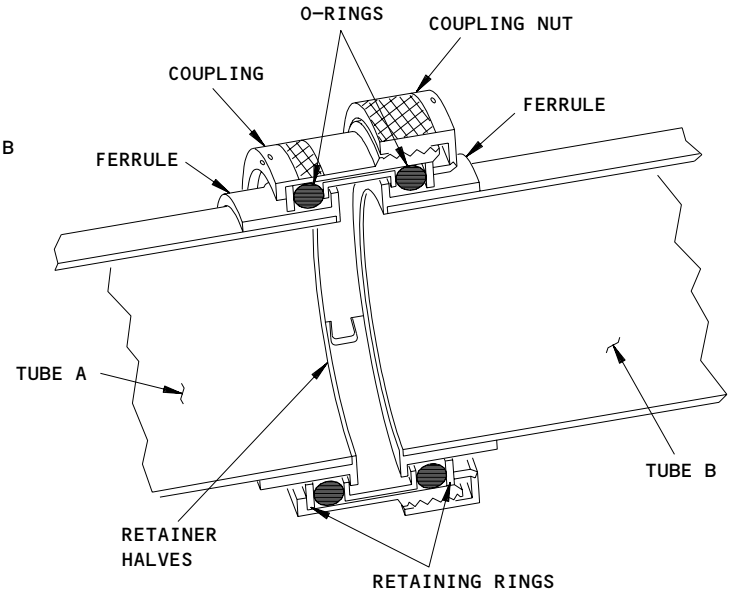

B-B

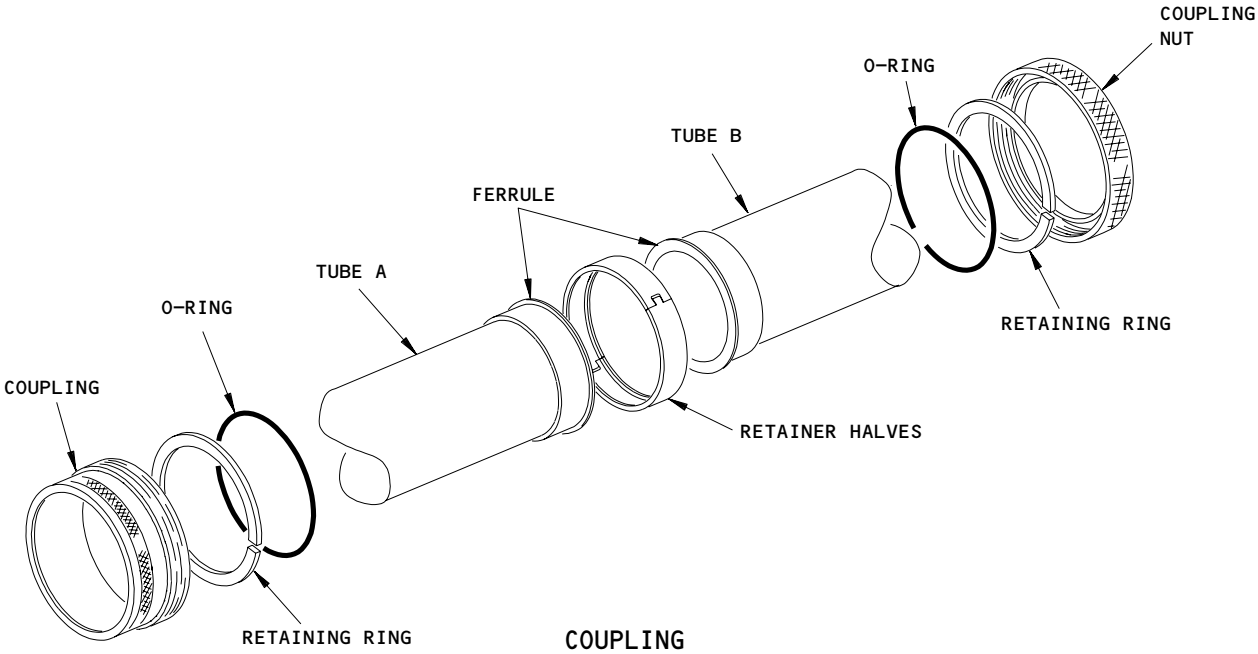

COUPLING

C

Fuel Line - Nacelle Strut
Figure 405 (Sheet 3)

BOEING PROPRIETARY - Copyright (C) - Unpublished Work - See title page for details.

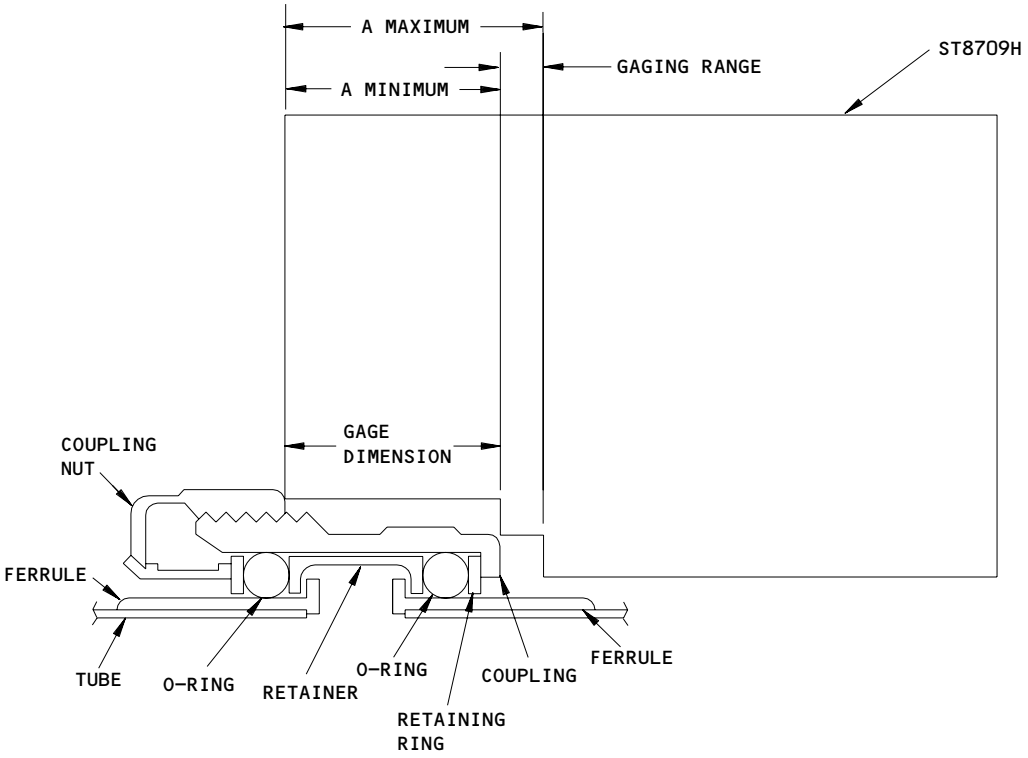

FLEXIBLE COUPLING WITH COUPLING GAGE

TUBE DIAMETER INCHES	BACC42R SIZE	MAX. GAGE	MIN. GAGE	GAGE NO. ST8709H
1/2	08	0.59	0.47	1
5/8	10	0.59	0.47	1
3/4	12	0.69	0.55	2
1	16	0.75	0.60	3
1-1/4	20	0.75	0.60	3
1-1/2	24	0.93	0.76	4
1-3/4	28	0.93	0.76	4
2	32	0.93	0.76	4

TUBE DIAMETER INCHES	BACC42R SIZE	MAX. GAGE	MIN. GAGE	GAGE NO. ST8709H
2-1/4	36	0.93	0.76	4
2-1/2	40	0.93	0.76	4
3	48	0.93	0.76	4
3-1/2	56	1.03	0.88	5
4	64	1.03	0.88	5
4-1/2	72	1.16	0.99	6
5	80	1.39	1.22	7
5-1/2	88	1.39	1.22	7

DIMENSIONAL REQUIREMENTS FOR ASSEMBLING FLEXIBLE FULL COUPLING

FLEXIBLE FULL COUPLING DIMENSIONS

Flexible Full Coupling Installation
Figure 405 (Sheet 4)

BOEING PROPRIETARY - Copyright (C) - Unpublished Work - See title page for details.

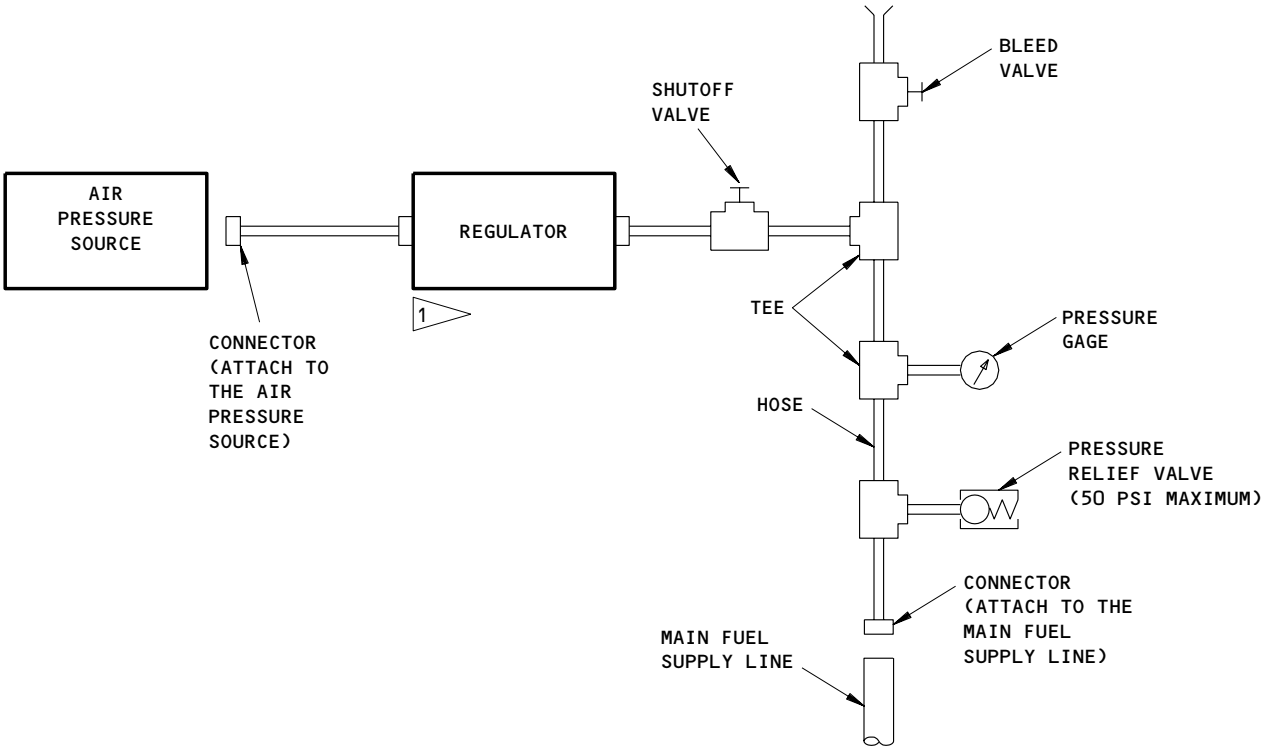

1 REGULATOR WHICH CAN DECREASE AIR PRESSURE TO 40 PSIG.

Pressure Check Equipment
Figure 406

BOEING PROPRIETARY - Copyright (C) - Unpublished Work - See title page for details.

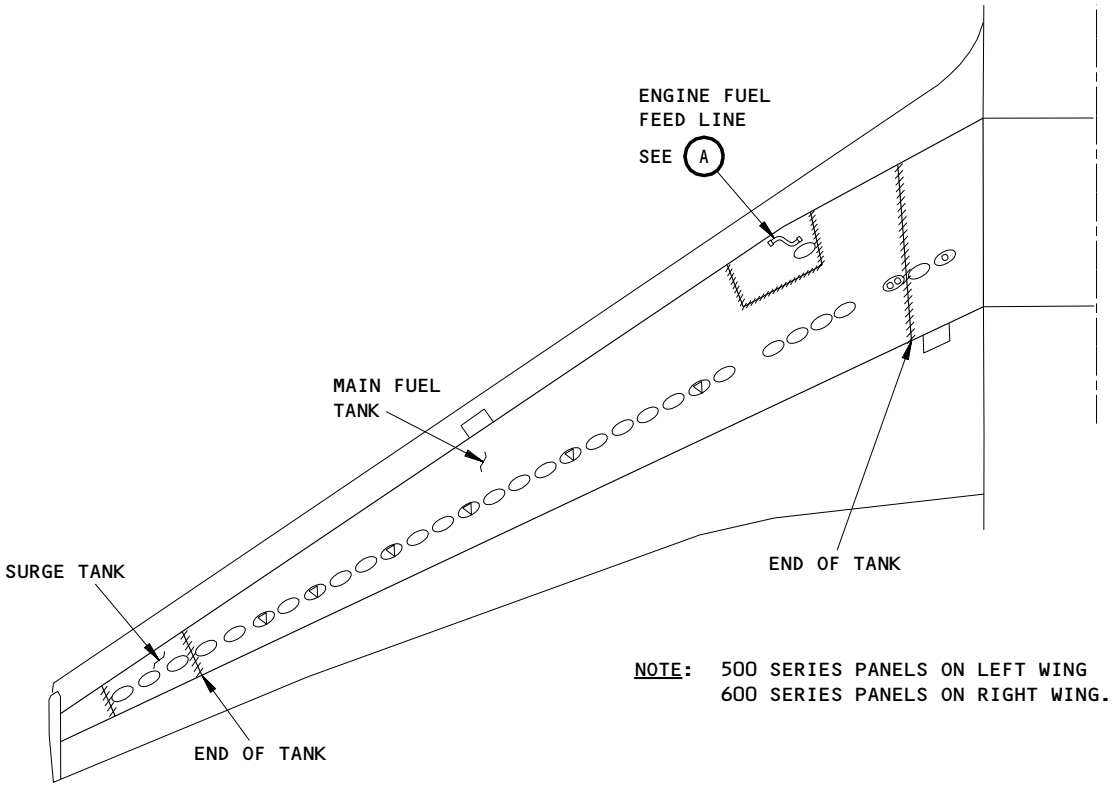

Dry Bay Fuel Line and Fittings Installation
Figure 407 (Sheet 1)

BOEING PROPRIETARY - Copyright (C) - Unpublished Work - See title page for details.

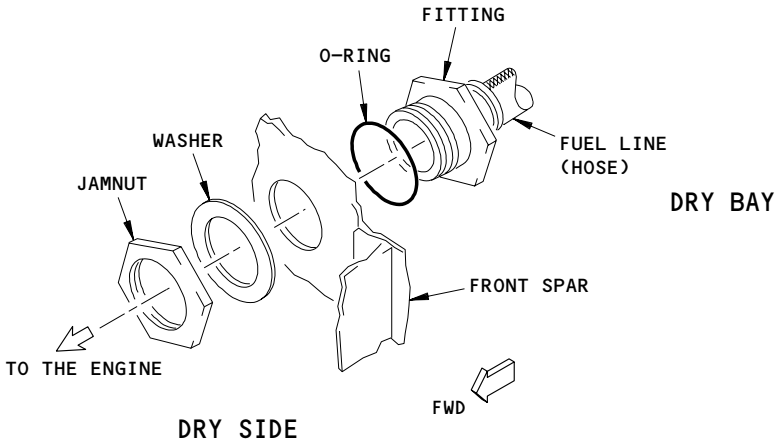

ENGINE FUEL FEED LINE
(DISASSEMBLED)

A

Dry Bay Fuel Line and Fittings Installation
Figure 407 (Sheet 2)

BOEING PROPRIETARY - Copyright (C) - Unpublished Work - See title page for details.

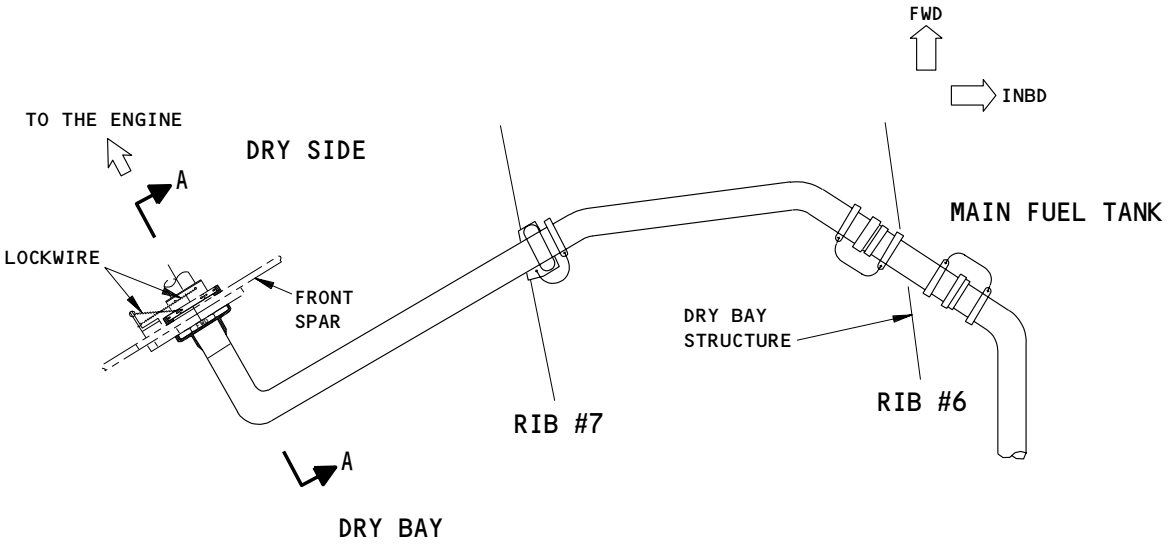

ENGINE FUEL FEED LINE
(ASSEMBLED)

A

Dry Bay Fuel Line and Fittings Installation
Figure 407 (Sheet 3)

BOEING PROPRIETARY - Copyright (C) - Unpublished Work - See title page for details.

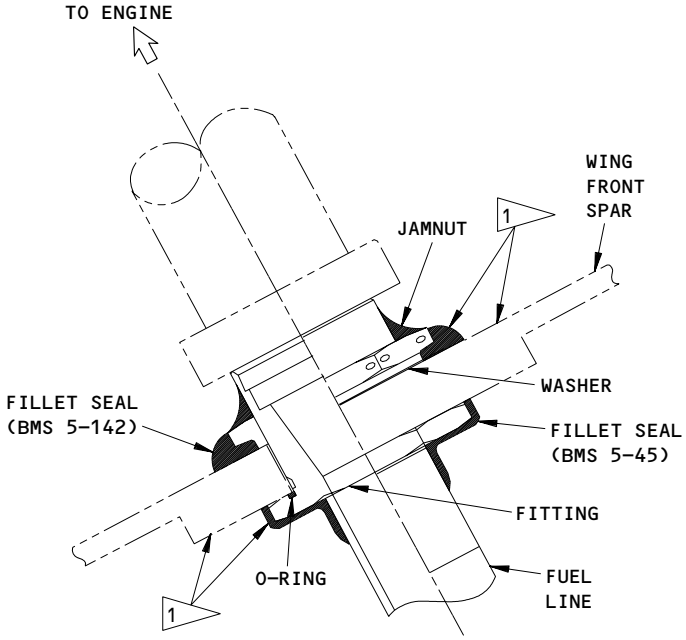

DRY BAY

A-A

1 RESISTANCE FROM BULKHEAD FITTING TO FRONT SPAR IS 0.0005 OHM (0.5 MILLIOHM) OR LESS.

Dry Bay Fuel Line and Fittings Installation
Figure 407 (Sheet 4)

BOEING PROPRIETARY - Copyright (C) - Unpublished Work - See title page for details.

(2) Access Panels
511PT Wing Leading Edge Cover (Left)
611PT Wing Leading Edge Cover (Right)

C. Procedure

S 654-002
(1) Defuel the applicable fuel tank (AMM 28-26-00/201).

NOTE: You must defuel the main fuel tanks if you remove a part of the engine fuel-feed manifold.

S 654-003
(2) Do the Purging and Fuel Tank Entry procedure (AMM 28-11-00/201).

S 014-004
(3) Remove the applicable tank access door (AMM 28-11-01/401, AMM 28-11-02/401, AMM 28-11-06/401).

S 014-056
(4) To get access to the fuel lines in the strut, open or remove the applicable strut access doors or panels (AMM 54-53-01/401).

S 014-057
(5) To get access to the fuel line at the forward side of the front spar, remove the applicable left or right access panel, 511PT or 611PT (AMM 06-44-00/201).

S 944-005

WARNING: OBEY THE FUEL TANK ENTRY PRECAUTIONS. FAILURE TO OBEY THE FUEL TANK ENTRY PRECAUTIONS COULD CAUSE INJURY TO PERSONS OR DAMAGE TO EQUIPMENT.

(6) Obey the fuel tank entry precautions (AMM 28-11-00/201).

S 014-059
(7) To remove the bulkhead fitting at the front spar, do the following (Fig. 407):
(a) At the forward side of the front spar, do these steps:
1) Remove the lockwire that attaches to the coupling nut and the jamnut for the fuel line.
2) Remove the sealant around the jamnut and coupling nut at the forward side of the front spar.
3) Disconnect the coupling nut and fuel line from the front spar.
4) Remove and keep the jamnut and washer.
(b) From in the dry bay, do these steps:
1) Remove the sealant (if applied) from around the bulkhead fitting for the fuel line on the front spar.

BOEING PROPRIETARY - Copyright (C) - Unpublished Work - See title page for details.

2) Disconnect the bulkhead fitting for the fuel line from the front spar.
3) Remove the fuel line, washer, and O-rings from the dry bay.
a) Discard the O-rings.

S 034-006
(8) Remove the bolts, washers and nuts to disconnect the bonding jumpers.

S 034-007
(9) Loosen the coupling nuts.

S 024-008
(10) Disconnect the clamps on the fuel lines from the structure or support brackets.

S 024-009
(11) Remove the fuel lines, clamps and couplings.

S 034-010
(12) Discard the O-ring and retaining rings from the couplings.

TASK 28-22-07-404-011
3. Install the Fuel Lines and Fittings
A. Equipment
(1) Coupling gage - ST8709 H (optional)
(2) Bonding meter
B. Consumable Materials
(1) G02353 Lubricant-Petrolatum, VV-P-236
(2) Protective Coating - Alodine 600, Type 2, Class D
(3) Sealant - Use one of these (BMS 5-142 recommended):
(a) A00765 Sealant - Low Density Chromate Type, BMS 5-142
(b) A00247 Sealant - Chromate, Type BMS 5-95
(4) A00767 Sealant - Integral Fuel Tank BMS 5-45
(5) G02392 Lockwire, Corrosion Resistant Steel (0.032 Inch Diameter) - MS20995NC32
C. References
(1) AMM 12-11-01/301, Fuel Tank Pressure Fueling

BOEING PROPRIETARY - Copyright (C) - Unpublished Work - See title page for details.

(2) AMM 20-10-21/601, Electrical Bonding
(3) AMM 20-10-23/401, Lockwire
(4) AMM 28-11-00/201, Fuel Tanks
(5) AMM 06-44-00/201, Wings (Major Zones 500 and 600) Access Doors and Panels
(6) AMM 28-11-01/401, Main Tank Access Door
(7) AMM 28-11-02/401, Auxiliary Tank Access Door
(8) AMM 28-11-06/401, Engine Dry Bay Access Door
(9) AMM 28-22-00/501, Engine Fuel Feed System
(10) SWPM 20-20-00

D. Access

(1) Location Zones

133	Wing Center Section (Left)
134	Wing Center Section (Right)
511	Leading Edge to Front Spar (Left)
531	Center Auxiliary Tank (Left)
532	Main Tank - Inboard of Rib No. 10 (Left)
541	Main Tank - Outboard of Rib No. 10 (Left)
533	Engine Dry Bay (Left)
611	Leading Edge to Front Spar (Right)
631	Center Auxiliary Tank (Right)
632	Main Tank - Inboard of Rib No. 10 (Right)
641	Main Tank - Outboard of Rib No. 10 (Right)
633	Engine Dry Bay (Right)

(2) Access Panels

511PT	Wing Leading Edge Cover (Left)
611PT	Wing Leading Edge Cover (Right)

E. Procedure

S 944-012

WARNING: OBEY THE FUEL TANK ENTRY PRECAUTIONS. FAILURE TO OBEY THE FUEL TANK ENTRY PRECAUTIONS COULD CAUSE INJURY TO PERSONS OR DAMAGE TO EQUIPMENT.

(1) Obey the fuel tank entry precautions (AMM 28-11-00/201).

S 424-013

(2) Install the bolts, washers and nuts to loosely connect the clamps on the fuel line to the structure or support brackets.

BOEING PROPRIETARY - Copyright (C) - Unpublished Work - See title page for details.

S 424-060

(3) To install the bulkhead fitting at the front spar, do the steps that follow (Fig. 407):

(a) In the dry bay, do these steps:

1) Prepare the mating surface on the aft side of the front spar for an electrical bond with cleaning method 3 (SWPM 20-20-00).

NOTE: The area that you clean should be a little larger than the area that the fitting on the fuel line touches.

2) Prepare the surface of the fuel line fitting that touches the front spar with cleaning method 1 (SWPM 20-20-00).

a) Make sure there is no finish on the forward side of the fitting.

b) Do not clean the threaded area on the fitting.

3) Install a new O-ring on the fitting for the front spar.

4) Install the fuel line fitting in the hole in the front spar.

(b) At the forward side of the front spar, do these steps:

1) Install the washer with BMS 5-45 sealant (for a fay surface with the front spar) and jamnut on the fitting.

2) While someone holds the fitting and fuel line with a wrench in the dry bay, tighten the jamnut to a torque of 880-960 inch-pounds (99.4-108.5 Nm).

3) Connect the coupling nut and fuel line to the fitting on the forward side of the front spar.

4) Install lockwire between the jamnut and structure (AMM 20-10-23/401).

5) Install lockwire between the coupling nut and structure (AMM 20-10-23/401).

BOEING PROPRIETARY - Copyright (C) - Unpublished Work - See title page for details.

WARNING: MAKE SURE YOU USE AN EXPLOSION-PROOF BONDING METER TO DO A CHECK OF THE ELECTRICAL RESISTANCE. THE OPEN FUEL TANK IS AN EXPLOSIVE VAPOR AREA.

6) Do a check of the bonding resistance between the fitting and the forward side of the front spar (SWPM 20-20-00).

NOTE: CDCCL - Refer to the task: Airworthiness Limitation Precautions (AMM 28-00-00/201), for important information on Critical Design Configuration Control Limitations (CDCCLs).

NOTE: This is applicable to Airworthiness Limitation 28-AWL-03.

a) Make sure the resistance is 0.0005 ohm (0.5 milliohm) or less.

NOTE: CDCCL - Refer to the task: Airworthiness Limitation Precautions (AMM 28-00-00/201), for important information on Critical Design Configuration Control Limitations (CDCCLs).

NOTE: This is applicable to Airworthiness Limitation 28-AWL-03.

7) Apply Alodine 600, Type 2, Class D conversion coating to all bare metal, as soon as possible after the resistance check. If delayed for more than four hours, polish lightly with abrasive before applying conversion coating.

8) Apply a fillet seal of BMS 5-142 sealant completely around the perimeter of the jamnut (AMM 51-31-01/201).

NOTE: CDCCL - Refer to the task: Airworthiness Limitation Precautions (AMM 28-00-00/201), for important information on Critical Design Configuration Control Limitations (CDCCLs).

NOTE: This is applicable to Airworthiness Limitation 28-AWL-03.

NOTE: The minimum sealant thickness is 0.11 inch (2.8 mm).

(c) In the dry bay, do these steps:

BOEING PROPRIETARY - Copyright (C) - Unpublished Work - See title page for details.

WARNING: MAKE SURE YOU USE AN EXPLOSION-PROOF BONDING METER TO DO A CHECK OF THE ELECTRICAL RESISTANCE. THE OPEN FUEL TANK IS AN EXPLOSIVE VAPOR AREA.

1) Do a check of the bonding resistance between the fitting on the fuel line and the front spar (SWPM 20-20-00).

NOTE: CDCCL - Refer to the task: Airworthiness Limitation Precautions (AMM 28-00-00/201), for important information on Critical Design Configuration Control Limitations (CDCCLs).

NOTE: This is applicable to Airworthiness Limitation 28-AWL-03.

a) Make sure the resistance is 0.0005 ohm (0.5 milliohm) or less.

NOTE: CDCCL - Refer to the task: Airworthiness Limitation Precautions (AMM 28-00-00/201), for important information on Critical Design Configuration Control Limitations (CDCCLs).

NOTE: This is applicable to Airworthiness Limitation 28-AWL-03.

b) Apply Alodine 600, Type 2, Class D conversion coating to all bare metal, as soon as possible after the resistance check. If delayed for more than four hours, polish lightly with abrasive before applying conversion coating.

2) Apply a fillet seal of BMS 5-45 sealant completely around the perimeter of the fitting.

NOTE: CDCCL - Refer to the task: Airworthiness Limitation Precautions (AMM 28-00-00/201), for important information on Critical Design Configuration Control Limitations (CDCCLs).

NOTE: This is applicable to Airworthiness Limitation 28-AWL-03.

NOTE: The minimum sealant thickness is 0.10 inch (2.5 mm).

S 424-014

(4) Install the rigid couplings on the fuel line as it is necessary (Fig. 401).

(a) Put the coupling nut on the ferrule on fuel line A.

BOEING PROPRIETARY - Copyright (C) - Unpublished Work - See title page for details.

(b) Put the new retaining ring on the ferrule to hold the coupling nut on fuel line A.
(c) Lubricate the new O-ring with petrolatum.

CAUTION: DO NOT USE THE SAME O-RING FOR THE FUEL LINE FITTINGS AFTER YOU TIGHTEN THE COUPLING ONE TIME. YOU MUST INSTALL NEW O-RINGS OR FUEL LEAKS CAN OCCUR.

(d) Install the O-ring on fuel line B.
(e) Align fuel line A and fuel line B.

CAUTION: DO NOT USE TOOLS TO TIGHTEN THE FUEL LINE FITTINGS. DAMAGE TO THE FITTING COMPONENTS COULD OCCUR OR THE ADJACENT FITTINGS COULD LOOSEN.

(f) Manually tighten the coupling nut to connect fuel line A and fuel line B.
(g) Install the lockwire between the coupling nut and ferrule (AMM 20-10-23/401).

S 424-015
(5) Install the flexible half coupling on the fuel line as it is necessary (Fig. 402).
(a) Put the coupling nut on the ferrule on the fuel line.

CAUTION: DO NOT TWIST THE RETAINING RING OUT OF SHAPE. IF THE RETAINING RING IS DAMAGED, FUEL LEAKS AT THE FITTING COULD OCCUR.

(b) Put one new retaining ring on the ferrule to hold the coupling nut on the fuel line.
(c) Lubricate the new O-ring with petrolatum.

CAUTION: DO NOT USE THE SAME O-RING FOR THE FUEL LINE FITTINGS AFTER YOU TIGHTEN THE COUPLING ONE TIME. YOU MUST INSTALL NEW O-RINGS OR FUEL LEAKS CAN OCCUR.

(d) Put the O-ring on the ferrule.

CAUTION: DO NOT TWIST THE RETAINING RING OUT OF SHAPE. IF THE RETAINING RING IS DAMAGED, FUEL LEAKS AT THE FITTING COULD OCCUR.

(e) Put the second new retaining ring on the ferrule.
(f) Put the fuel line into the fitting.

CAUTION: DO NOT USE TOOLS TO TIGHTEN THE FUEL LINE FITTINGS. DAMAGE TO THE FITTING COMPONENTS COULD OCCUR OR THE ADJACENT FITTINGS COULD LOOSEN.

(g) Manually tighten the coupling nut.

BOEING PROPRIETARY - Copyright (C) - Unpublished Work - See title page for details.

(h) Install the lockwire between the coupling nut and the ferrule (AMM 20-10-23/401).

S 424-016

(6) Install the flexible full coupling on the fuel lines as it is necessary (Fig. 403).
(a) Put the coupling nut on the ferrule on fuel line A.
(b) Put the coupling on the ferrule on fuel line B.

CAUTION: DO NOT TWIST THE RETAINING RING OUT OF SHAPE. IF THE RETAINING RING IS DAMAGED, FUEL LEAKS AT THE FITTING COULD OCCUR.

(c) Put one new retaining ring on each ferrule to hold the coupling nut and coupling on the ends of fuel line A and fuel line B.
(d) Lubricate the new O-rings with petrolatum.

CAUTION: DO NOT USE THE SAME O-RING FOR THE FUEL LINE FITTINGS AFTER YOU TIGHTEN THE COUPLING ONE TIME. YOU MUST INSTALL A NEW O-RING OR FUEL LEAKS CAN OCCUR.

(e) Put one new O-ring on each ferrule.
(f) Align the ends of fuel line A and fuel line B with a 0.15 ± 0.05 inch (3.81 ± 1.27 mm) clearance between the ferrules.
(g) Make sure the ends of fuel line A and fuel line B are not offset more than 0.06 inch (1.52 mm).
(h) Put the retainer halves together on the ferrules to connect fuel line A and fuel line B.

CAUTION: DO NOT USE TOOLS TO TIGHTEN THE FUEL LINE FITTINGS. DAMAGE TO THE FITTING COMPONENTS COULD OCCUR OR THE ADJACENT FITTINGS COULD LOOSEN.

(i) Manually tighten the coupling nut to the necessary dimension (Fig. 403).

NOTE: Use the coupling gage to measure the dimension.

(j) Install the lockwire between the coupling nut and the coupling (AMM 20-10-23/401).

S 424-017

(7) Tighten the clamps on the fuel line to the structure or support brackets.

S 434-018

(8) Tighten the support brackets to the structure with bolts, washers, and nuts if the support brackets are not riveted.

BOEING PROPRIETARY - Copyright (C) - Unpublished Work - See title page for details.

S 214-019
(9) Make sure the fuel line does not touch the structure.

S 214-020
(10) Make sure the distance between the fuel line and the structure is a minimum of 0.25 inch (6.3 mm).

NOTE: This does not include the area near the support bracket.

S 434-021
(11) Install the bolts, washers and nuts to connect the bonding jumpers and clamps.

S 224-058

WARNING: MAKE SURE YOU USE AN EXPLOSION-PROOF BONDING METER TO DO A CHECK OF THE ELECTRICAL RESISTANCE. THE OPEN FUEL TANK IS AN EXPLOSIVE VAPOR AREA.

(12) Make sure the bonding resistance between the bonding jumper and the airplane structure is not more than 0.01 ohms (SWPM 20-20-00).

S 714-023
(13) Do a check for fuel leakage for the couplings you installed (AMM 28-22-00/501).

S 094-024
(14) Remove all the tools and equipment from the fuel tank.

S 414-061
(15) For the fuel line and fittings at the forward side of the front spar, install the applicable left or right access panel, 511PT or 611PT (AMM 54-53-01/401).

S 414-025
(16) Install the applicable tank access doors (AMM 28-11-01/401, AMM 28-11-02/401).

S 654-026
(17) Refuel the fuel tanks if no more work is necessary (AMM 12-11-01/301).

TASK 28-22-07-404-027
4. Fuel Line in the Engine Strut - Coupling O-Ring Removal
A. General
(1) This task is for digital task card requirements.
(2) This task removes the coupling O-rings, retaining rings, and retaining halves from the fuel line in the engine strut area.

BOEING PROPRIETARY - Copyright (C) - Unpublished Work - See title page for details.

(3) This task can be done with or without fuel in the fuel tanks. If there is fuel in the fuel tanks, the engine spar valve must be closed and the fuel drained from the fuel line.

B. Equipment

(1) Container - 5 gallon (20 liter) capacity, suitable for the collection of fuel.

C. Consumable Materials

(1) G02353 Petrolatum, VV-P-236

D. References

(1) AMM 24-22-00/201, Manual Control
(2) AMM 28-22-07/601, Engine Fuel Feed lines and Couplings
(3) AMM 27-81-00/201, Leading Edge Slat System
(4) AMM 54-51-00/201, Nacelle Strut Maintenance
(5) AMM 54-52-01/401, Strut Fairings
(6) AMM 71-11-04/201, Panels - Fan Cowl
(7) AMM 71-11-06/201, Panels - Core Cowl
(8) AMM 73-11-08/401, Engine Main Fuel Supply Line
(9) AMM 78-31-00/201, Thrust Reverser System
(10) AIPC 28-22-07 FIG. 20
(11) AIPC 28-22-07 FIG. 25
(12) AIPC 28-22-07 FIG. 30

E. Access

(1) Location Zones

410 Power Plant - Engine 1
420 Power Plant - Engine 2
430 Nacelle Strut Fwd Torque Box - Engine 1
440 Nacelle Strut Fwd Torque Box - Engine 2
510 Leading Edge to Front Spar - Engine 1
610 Leading Edge to Front Spar - Engine 2

(2) Access Panels

413AL Fan Cowl Panel - Engine 1
414AR Fan Cowl Panel - Engine 1
415AL Thrust Reverser Half - Engine 1
416AR Thrust Reverser Half - Engine 1
417AL Core Cowl Panel - Engine 1
418AR Core Cowl Panel - Engine 1
511PT Wing Leading Edge Cover - Engine 1
423AL Fan Cowl Panel - Engine 2
424AR Fan Cowl Panel - Engine 2
425AL Thrust Reverser Half - Engine 2
426AR Thrust Reverser Half - Engine 2
427AL Core Cowl Panel - Engine 2
428AR Core Cowl Panel - Engine 2
611PT Wing Leading Edge Cover - Engine 2

F. Prepare for Removal

S 864-028

(1) Supply the necessary electrical power (AMM 24-22-00/201).

BOEING PROPRIETARY - Copyright (C) - Unpublished Work - See title page for details.

S 864-029

WARNING: MAKE SURE THAT PERSONS AND EQUIPMENT ARE CLEAR OF THE LE SLAT AND TE FLAPS AND FLAP DRIVE MECHANISMS BEFORE YOU MOVE THE FLAP CONTROL LEVER. WITH HYDRAULIC POWER REMOVED, THE FLAPS WILL MOVE AUTOMATICALLY BY ELECTRICAL POWER WHEN YOU MOVE THE FLAP CONTROL LEVER. THIS CAN CAUSE INJURY TO PERSONS OR DAMAGE TO EQUIPMENT.

WARNING: YOU MUST CAREFULLY DO THE STEPS IN THE TASK BELOW TO INSTALL THE LE SLAT SAFETY LOCKS. THE LE SLATS CAN MOVE QUICKLY IF YOU DO NOT INSTALL THE SAFETY LOCKS CORRECTLY. THIS CAN CAUSE INJURY TO PERSONS OR DAMAGE TO EQUIPMENT.

(2) Do this task: Leading Edge Slat Extension and Safety Lock Installation (AMM 27-81-00/201).

S 864-030

(3) Make sure all of the FUEL CONTROL switches, found on the Flight Deck Center Console, P10, are in the CUTOFF position.
  (a) Attach a DO-NOT-OPERATE tag to the FUEL CONTROL switches.

S 864-031

(4) FOR THE APPLICABLE ENGINE;
Open these circuit breakers and attach DO-NOT-CLOSE tags:
  (a) On the overhead circuit breaker panel, P11:
    1) For the left and the right engine:
      a) 11D7, ENGINE STBY IGN 1
      b) 11D8, ENGINE STBY IGN 2
    2) For the left engine:
      a) 11M1, L IGN 1
      b) 11M28, L IGN 2
      c) 11M9, LEFT ENGINE PWR SENSE
    3) For the right engine:
      a) 11M2, R IGN 1
      b) 11M29, R IGN 2
      c) 11M36, RIGHT ENGINE PWR SENSE

S 864-032

(5) Do the applicable steps of Task: Engine Main Fuel Supply Line (AMM 73-11-08/401) to drain the fuel from the engine strut fuel line.

S 014-033

(6) Open the applicable wing leading edge cover (Fig. 404) (AMM 54-51-00/201).

BOEING PROPRIETARY - Copyright (C) - Unpublished Work - See title page for details.

S 014-034
(7) Open the applicable strut access panels (Fig. 404) (AMM 54-52-01/401).

G. Remove the Coupling O-rings From the Fuel Line in the Engine Strut (Fig. 405)

S 034-035
(1) Do these steps to remove the coupling O-rings, retaining rings and retainer halves:
(a) Loosen the fuel tube bonding clamps, as necessary, to let the coupling components be removed.
(b) Remove the lockwire from the coupling nuts.
(c) Loosen the coupling nuts.
(d) Push the coupling nut(s) away from the fuel tube ends.
(e) Remove and discard the coupling O-rings, the retaining rings, and the retaining halves.
(f) Keep the other components of the coupling for the installation.

S 494-036
(2) Install dust covers on all open fuel lines.

S 214-037

CAUTION: DO NOT REPAIR THE FUEL TUBES IN THE STRUT AREA. IF A FUEL TUBE HAS DAMAGE THAT IS NOT PERMITTED PER THE ENGINE FUEL LINE DENT CRITERIA, YOU MUST REPLACE THE FUEL TUBE. A DAMAGED FUEL TUBE CAN LEAK WHICH CAN CAUSE A FIRE IN THE STRUT AREA.

(3) Inspect the fuel tubes and the couplings for damage (AMM 28-22-07/601).

TASK 28-22-07-404-038
5. Fuel Line in the Engine Strut - Coupling O-ring Installation
A. General
(1) This task is for digital task card requirements.
(2) This task installs the coupling O-rings, retaining rings, and retainer halves to the fuel line in the engine strut area.
B. Equipment
(1) Bonding Meter
(2) Coupling Gage - ST8709 H
C. Consumable Materials
(1) G02353 Petrolatum, VV-P-236
D. References
(1) AMM 12-11-01/301, Fuel Tank Pressure Fueling
(2) AMM 24-22-00/201, Manual Control
(3) AMM 28-22-07/601, Engine Fuel Feed System Fuel Line
(4) AMM 27-81-00/201, Leading Edge Slat System
(5) AMM 54-51-00/201, Nacelle Strut Maintenance
(6) AMM 54-52-01/401, Strut Fairing Removal/Installation

BOEING PROPRIETARY - Copyright (C) - Unpublished Work - See title page for details.

(7) AMM 71-00-00/201, Power Plant
(8) AMM 71-00-00/501, Power Plant
(9) AMM 71-11-04/201, Fan Cowl Panels
(10) AMM 71-11-06/201, Core Cowl Panels
(11) AMM 73-11-08/401, Engine Main Fuel Supply Line
(12) AMM 78-31-00/201, Thrust Reverser System
(13) AIPC 28-22-07 FIG. 20
(14) AIPC 28-22-07 FIG. 25
(15) AIPC 28-22-07 FIG. 30
(16) SWPM 20-20-00, Electrical Ground and Bond

E. Access

(1) Location Zones

410	Power Plant - Engine 1
420	Power Plant - Engine 2
430	Nacelle Strut Fwd Torque Box - Engine 1
440	Nacelle Strut Fwd Torque Box - Engine 2
510	Leading Edge to Front Spar - Engine 1
610	Leading Edge to Front Spar - Engine 2

(2) Access Panels

413AL	Fan Cowl Panel - Engine 1
414AR	Fan Cowl Panel - Engine 1
415AL	Thrust Reverser Half - Engine 1
416AR	Thrust Reverser Half - Engine 1
417AL	Core Cowl Panel - Engine 1
418AR	Core Cowl Panel - Engine 1
511PT	Wing Leading Edge Cover - Engine 1
423AL	Fan Cowl Panel - Engine 2
424AR	Fan Cowl Panel - Engine 2
425AL	Thrust Reverser Half - Engine 2
426AR	Thrust Reverser Half - Engine 2
427AL	Core Cowl Panel - Engine 2
428AR	Core Cowl Panel - Engine 2
611PT	Wing Leading Edge Cover - Engine 2

F. Install the Coupling O-Rings, Retaining Rings, Retainer Halves to the Fuel Line in the Engine Strut Area (Fig. 405)

S 434-039

CAUTION: DO NOT USE ANY TOOLS TO TIGHTEN THE FUEL LINE FITTINGS. DAMAGE TO THE FITTING COMPONENTS OR LOOSENING OF THE ADJACENT FITTINGS CAN OCCUR.

(1) Do these steps to inspect the installation of the fuel couplings:
(a) Make sure the O-rings are new and are not contaminated or damaged.
(b) Make sure the O-rings are lubricated with petrolatum before the installation.
(c) Make sure the retaining rings are new and are not deformed or bent.

BOEING PROPRIETARY - Copyright (C) - Unpublished Work - See title page for details.

(d) Make sure the retaining halves are new and are not deformed or bent.

S 424-055

(2) Do these steps to install the fuel couplings:
   (a) Align the ends of fuel line A and fuel line B with a 0.15 ± 0.05 inch (3.81 ± 1.27 mm) clearance between the ferrules.
   (b) Make sure the ends of fuel line A and fuel line B are not offset more than 0.06 inch (1.52 mm).
   (c) Make sure all of the coupling components are installed and in the correct sequence.
   (d) Make sure the coupling is manually tightened.
   (e) Make sure the coupling is tightened as far as possible by hand.
   (f) For flexible full couplings, make sure the minimum and maximum dimensions are correct (Fig. 405).
      1) Measure the assembled coupling with tool ST8709H at three to four locations. Make sure the minimum and maximum dimensions are correct all the way around the coupling.
   (g) Install the lockwire between the coupling nut and the coupling (AMM 20-10-23/401).

S 214-040

(3) Do a check of the minimum clearance between the fuel tube and the structure:

NOTE: The supported area of a tube is defined as the section of the tube that is within three inches of a bulkhead nut that attaches the tube to a rigid piece of equipment.

BETWEEN THE FUEL LINE AND ADJACENT STRUCTURE	
0.50 inch (12.70 mm)	At locations that are not supported
0.10 inch (2.54 mm)	At locations that are supported (or the thickness of the supported clamps when the fuel tubing is clamped directly to the structure)

BOEING PROPRIETARY - Copyright (C) - Unpublished Work - See title page for details.

NEAR THE POSITION OF ANY PART THAT CAN MOVE (OPERATING MECHANISM)	
0.50 inch (12.70 mm)	At locations that are not supported
0.25 inch (6.35 mm)	At locations that are supported if it is not possible for chafing or interference to occur

BETWEEN TUBES THAT CROSS OR RUN PARALLEL	
0.50 inch (12.70 mm)	Or the distance measured between tubes at clampblocks locations when the tube run is held parallel by clampblocks (whichever is smaller)
0.25 inch (6.35 mm)	Between non-parallel tubes that go through the same clampblock support, within three inches of that clampblock support

S 434-041

(4) Do a check of the bonding resistance between the fuel tube(s) and the airplane structure (SWPM 20-20-00).

(a) Solvent wipe the fuel tube(s) at the locations where the bonding jumper clamps are installed (SWPM 20-20-00).

NOTE: Do not apply any type of coating to the fuel tubes, couplings or clamps.

(b) Hold the bonding clamps on the fuel tube(s).

(c) Attach the bonding jumper to the bonding clamp with the bolt, washers, and nut (SWPM 20-20-00).

WARNING: MAKE SURE YOU USE AN EXPLOSION-PROOF BONDING METER TO DO A CHECK OF THE ELECTRICAL RESISTANCE. THE OPEN FUEL TANK IS AN EXPLOSIVE VAPOR AREA.

(d) Do a check of the bonding resistance between the fuel tube(s) and the airplane structure (SWPM 20-20-00).

NOTE: The resistance must not be more than 0.010 ohm.

BOEING PROPRIETARY - Copyright (C) - Unpublished Work - See title page for details.

G. Do a Leak Check for the Fuel Line in the Strut Area

NOTE: The purpose of this check is to make sure the fuel line in the strut area is installed correctly. Use one or both methods to leak check the fuel line in the strut area. A fuel pressure leak check is the preferred method, however, it is recommended that both an air pressure leak check and a fuel pressure leak check be done. If METHOD 1 is done first, it will reduce the possibility of a fuel leak and the possible time delay caused by the removal of fuel from the fuel line if maintenance action is necessary to repair a leak.

METHOD 1:
Air Pressure Leak Check. This method uses 40 psi air pressure with the fuel spar valve closed to check the fuel line in the strut area for leaks.

METHOD 2:
Fuel Pressure Leak Check. This method uses a visual inspection of the fuel line in the strut area with the fuel spar valve open and the fuel line pressurized with fuel from the fuel tank pumps.

S 784-042

(1) METHOD 1;
Air Pressure Leak Check.

NOTE: Use one of these equipment set-ups:
- G28018 air pressure equipment or,
- Air pressure check equipment set-up at the engine fuel pump (Fig. 406).

(a) If it is available, install the G28018 equipment at the fuel quick-disconnect (service disconnect panel).
  1) Connect the G28018 pressure check equipment to the air pressure source.

(b) To install the air pressure check equipment set-up at the applicable engine fuel pump, do these steps (AMM 73-11-08/401).
  1) Remove the bolts and washers from the flange that holds the fuel supply line to the engine fuel pump.
  2) Disconnect the fuel supply line from the fuel pump.
  3) Remove the gasket.
  4) If the gasket has no damage, keep it for the installation.
  5) Connect the pressure check equipment to the air pressure source and the flange on the airplane fuel supply line on the applicable engine (Fig. 401).

BOEING PROPRIETARY - Copyright (C) - Unpublished Work - See title page for details.

(c) Use the air pressure source to apply 40 psig pressure to the fuel line from the airplane fuel supply line to the fuel spar valve.
(d) Close the shutoff valve on the pressure check equipment.
(e) Monitor the pressure gage for 10 minutes.
  1) If the pressure stays the same or the pressure decreases by less than 1.5 psi in 10 minutes, the fuel line is satisfactory.
    a) If the fuel line is satisfactory, remove the pressure check equipment.
  2) If the pressure decreases more than 1.5 psi in 10 minutes, there is a leak in the fuel line.
    a) If there is a leak, do the subsequent steps.
(f) Do a check for air leaks.
  1) Use the air pressure source to apply 40 psig pressure to the fuel line from the airplane fuel supply line to the fuel spar valve.
  2) Close the shutoff valve on the pressure equipment.
  3) Listen for air leaks in the fuel line.
  4) When you find the leak, remove the air pressure from the fuel line.

  CAUTION: YOU CANNOT TIGHTEN THE FUEL LINE COUPLING AFTER THE INITIAL INSTALLATION. YOU MUST INSTALL A NEW O-RING WHEN YOU TIGHTEN THE FUEL LINE COUPLING OR A FUEL LEAK CAN OCCUR.

  5) If a coupling has a leak, disconnect the coupling, replace the O-rings, and then connect the coupling again (AMM 28-22-07/401).
    a) Make sure the O-ring(s) are lubricated with the petrolatum.
  6) If a fuel tube has a leak, replace the fuel tube.
  7) After you have repaired the leak, remove the air pressure equipment.
(g) If disconnected, install the fuel supply hose at the quick-disconnect.
(h) If disconnected, do these steps to connect the main fuel supply line to the engine fuel pump.
  1) Put a gasket, main fuel supply line flange and bracket on the inlet port of the fuel pump.
  2) Lubricate the threads of the bolts with engine oil.
  3) Install the fuel supply line and the bracket to the inlet port of the engine fuel pump with the bolts and the washers.

BOEING PROPRIETARY - Copyright (C) - Unpublished Work - See title page for details.

4) Tighten the bolts to 180 - 200 inch-pounds (20.3-22.6 Nm).

S 784-043

(2) METHOD 2;
Fuel Pressure Leak Check.
(a) Make sure the fuel line from the front spar to the engine pump is completely installed.
(b) Supply the electrical power (AMM 24-22-00/201).
(c) Make sure the auxiliary tank contains enough fuel to operate an override pump (AMM 28-22-00/501).
(d) Add fuel if it is necessary (AMM 12-11-01/301).
(e) For the applicable engine, remove the DO-NOT-CLOSE tags and close these circuit breakers:
1) On the main power distribution panel, P6:
a) 6E1, FUEL VALVE L SPAR
b) 6E2, FUEL VALVE R SPAR
(f) For the applicable engine, open these circuit breakers and attach DO-NOT-CLOSE tags:
1) On the overhead circuit breaker panel, P11:
a) 11D25, CONT VLV & EEC CHAN B RESET L
b) 11D26, CONT VLV & EEC CHAN B RESET R
(g) Open these circuit breakers and attach the DO-NOT-CLOSE tags on the overhead panel, P11:
1) For the left and right engine:
a) 11D7 ENGINE STBY IGN 1
b) 11D8 ENGINE STBY IGN 2
2) For the left engine:
a) 11M1 L IGN 1
b) 11M28 L IGN 2
c) 11M9 LEFT ENGINE BUS PWR SENSE
3) For the right engine:
a) 11M2 R IGN 1
b) 11M29 R IGN 2
c) 11M36 RIGHT ENGINE BUS PWR SENSE
(h) For the applicable override pump, close the circuit breaker and remove the DO-NOT-CLOSE tag:
1) On the main power distribution panel, P6:
a) 6F15, L FUEL OVRD PUMP
b) 6F21, R FUEL OVRD PUMP

WARNING: DO NOTE KEEP THE FUEL CONTROL SWITCH IN THE RUN POSITION FOR MORE THAN 30 MINUTES. FUEL LEAKAGE INTO THE COMBUSTION CHAMBER AND TURBINE CASE CAN OCCUR IF THE FUEL CONTROL SWITCH IS IN THE RUN POSITION FOR A LONG TIME. THIS COULD CAUSE A FIRE.

(i) Put the applicable FUEL CONTROL switch to the RUN position.
(j) Put the applicable flight compartment switch for the override pump to on.

BOEING PROPRIETARY - Copyright (C) - Unpublished Work - See title page for details.

WARNING: DO NOT OPERATE A FUEL PUMP IF THE LOW PRESSURE LIGHT COMES ON AND STAYS ON. FUEL VAPORS IN THE TANK MAY IGNITE AND CAUSE A FIRE OR EXPLOSION.

(k) To operate any of the fuel pumps, you must be in the flight compartment to continuously monitor the fuel quantity and the low pressure indication in the fuel tank.
  1) Immediately set the applicable fuel pump switch to OFF if the LOW PRESSURE light comes on and stays on.

(l) Do a visual inspection of the fuel line in the strut area and at the engine fuel pump with the fuel line pressurized.

NOTE: No fuel leaks are permitted.

(m) If there is a fuel leak, do these steps:
  1) Put the applicable override pump switch to the off position, and the FUEL CONTROL switch to CUTOFF.
  2) Do the steps in Task: Engine Main Fuel Supply Line (AMM 73-11-08/401) to remove the fuel from the fuel line in the strut area.

CAUTION: YOU CANNOT TIGHTEN THE FUEL LINE COUPLING AFTER THE INITIAL INSTALLATION. YOU MUST INSTALL A NEW O-RING WHEN YOU TIGHTEN THE FUEL LINE COUPLING OR A FUEL LEAK CAN OCCUR.

  3) If a coupling has a leak, disconnect the coupling, replace the O-rings, and then connect the coupling again using the steps in this procedure.
    a) Make sure the O-ring(s) are lubricated with the petrolatum.
  4) If a fuel tube has a leak, replace the fuel tube.
  5) Do the steps in this procedure again to pressurize the applicable fuel line and check for leaks.

(n) When the fuel line is satisfactory (no leaks), do these steps:
  1) Put the applicable override pump switch to off.
  2) Put the FUEL CONTROL switch to CUTOFF.

S 794-044

(3) Do the applicable sections of this task: Leak Check of the Strut Area (AMM 54-51-00/201).

H. Put the Airplane Back to Its Usual Condition

S 434-045

(1) Install the wing leading edge cover.

BOEING PROPRIETARY - Copyright (C) - Unpublished Work - See title page for details.

S 414-046

CAUTION: MAKE SURE ALL TOOLS, AND UNWANTED MATERIALS, ARE REMOVED FROM THE STRUT CAVITIES BEFORE YOU INSTALL THE STRUT ACCESS DOORS. THE STRUT DRAINS CAN BE BLOCKED WITH UNWANTED MATERIALS WHICH CAN CAUSE DAMAGE TO THE STRUT AREA.

(2) Do this Task: Install the Access Panels and Strut Fairings (AMM 54-52-01/401).

S 864-047

(3) Remove the DO-NOT CLOSE tags and close these circuit breakers on the overhead panel, P11:
   (a) For the left and right engine:
      1) 11D7, ENGINE STBY IGN 1
      2) 11D8, ENGINE STBY IGN 2
   (b) For the left engine:
      1) 11M1, L IGN 1
      2) 11M28, L IGN 2
      3) 11M9, LEFT ENGINE BUS PWR SENSE
   (c) For the right engine:
      1) 11M2, R IGN 1
      2) 11M29, R IGN 2
      3) 11M36, RIGHT ENGINE BUS PWR SENSE

S 864-062

(4) Dry motor the applicable engine before the next engine start to purge all fuel that remains (AMM 71-00-00/201).

S 864-048

(5) Supply the electrical power if it is necessary (AMM 24-22-00/201).

S 094-049

WARNING: MAKE SURE THAT PERSONS AND EQUIPMENT ARE CLEAR OF THE LE SLAT AND TE FLAPS AND FLAP DRIVE MECHANISMS BEFORE YOU MOVE THE FLAP CONTROL LEVER. WITH HYDRAULIC POWER REMOVED, THE FLAPS WILL MOVE AUTOMATICALLY BY ELECTRICAL POWER WHEN YOU MOVE THE FLAP CONTROL LEVER. THIS CAN CAUSE INJURY TO PERSONS OR DAMAGE TO EQUIPMENT.

WARNING: YOU MUST CAREFULLY DO THE STEPS IN THE TASK BELOW TO REMOVE THE LE SLAT SAFETY LOCK. THE LE SLATS CAN MOVE QUICKLY IF YOU DO NOT DO THE STEPS CORRECTLY. THIS CAN CAUSE INJURY TO PERSONS OR DAMAGE TO EQUIPMENT.

(6) Do this task: Leading Edge Slat Retraction (AMM 27-81-00/201).

BOEING PROPRIETARY - Copyright (C) - Unpublished Work - See title page for details.

S 714-054

(7) Do the test of the Fuel Manifold and External Tubes that is shown in the Power Plant Test Reference Table (AMM 71-00-00/501).

BOEING PROPRIETARY - Copyright (C) - Unpublished Work - See title page for details.

FUEL LINES AND FITTINGS - INSPECTION/CHECK

1. General
   A. This procedure contains a pressure leak check for the subsequent:
      (1) Engine fuel feed manifold
      (2) Couplings of the engine fuel feed manifold

TASK 28-22-07-796-001

2. Pressure Leak Check of the Fuel Lines and Fittings
   A. Equipment
      (1) Air pressure source - able to supply dry air at 0-50 psig
      (2) Engine fuel feed manifold test equipment - Use these components:
         (a) G28018-28 (G28018-26 Optional) - Fuel feed test equipment
         (b) G28018-6 - Fitting Assembly (CF6-80C Series / PW4000 Series Engines)
      (3) Container - 15-20 gallons, to catch fuel
   B. References
      (1) AMM 06-44-00/201, Wing Access Doors and Panels
      (2) AMM 12-11-01/301, Fuel Tank Pressure Fueling
      (3) AMM 24-22-00/201, Electrical Power - Control
      (4) AMM 28-11-00/201, Fuel Tanks
      (5) AMM 28-11-01/401, Main Tank Access Doors
      (6) AMM 28-11-02/401, Auxiliary Tank Access Doors
      (7) AMM 28-21-08/401, Fueling Manifold Pressure Relief Valve
      (8) AMM 28-22-07/401, Fuel Line and Fittings
      (9) AMM 28-26-00/201, Defueling
      (10) AMM 32-00-15/201, Landing Gear Door Locks
      (11) AMM 32-00-20/201, Landing Gear Down Locks
      (12) AMM 73-11-07/401, Main Fuel Supply Hose
   C. Access
      (1) Location Zones

133	Wing Center Section (Left)
134	Wing Center Section (Right)
531	Center Auxiliary Tank (Left)
532	Main Tank - Inboard of Rig No. 10 (Left)
533	Inboard Dry Bay (Left)
541	Main Tank - Outboard of Rib No. 10 (Left)
631	Center Auxilary Tank (Right)
632	Main Tank - Inboard of Rib No. 10 (Right)
633	Inboard Dry Bay (Right)
641	Main Tank - Outboard of Rib No. 10 (Right)

BOEING PROPRIETARY - Copyright (C) - Unpublished Work - See title page for details.

(2) Access Panels

533AB	Dry Bay Access Door
551TB	Access Panel (Left)
633AB	Dry Bay Access Door (Right)
651TB	Access Panel (Right)

D. Prepare for the Pressure Leak Check

S 216-088

(1) Make sure the downlocks are installed on the nose and main landing gear (AMM 32-00-20/201).

S 496-002

WARNING: USE THE PROCEDURE IN AMM 32-00-15/201 TO INSTALL THE DOOR LOCKS. THE DOORS OPEN AND CLOSE QUICKLY AND CAN CAUSE INJURY TO PERSONS OR DAMAGE TO EQUIPMENT.

(2) Open the doors for the landing gear and install the door locks (AMM 32-00-15/201).

S 656-089

(3) Defuel the fuel tanks (AMM 28-26-00/201).

S 866-124

(4) Do the applicable steps of the Task: Main Fuel Supply Hose (AMM 73-11-07/401) to drain the fuel from the left and right engine strut lines.

S 866-103

(5) Make sure the manual override handle on the APU shutoff valve is in the CLOSED position.

S 686-107

(6) Put the inlet lines in a 15-20 gallon fuel resistant container to catch fuel.

BOEING PROPRIETARY - Copyright (C) - Unpublished Work - See title page for details.

S 686-105

(7) Permit the fuel from the manifold to drain into the container.

(a) To let the fuel drain from the fuel feed manifold, do these steps:

1) Move the manual override handle for the crossfeed valve(s) to the OPEN position.

2) Move the manual override handle for the left and right engine fuel shutoff valves to the OPEN position.

3) Make sure the defueling valves are open.

S 866-109

(8) Manually close the defueling valves.

E. Procedure

S 036-049

(1) Disconnect the right engine fuel-feed manifold at the quick-disconnect fitting on the right engine strut (AMM 73-11-07/401).

S 496-106

(2) Install the fitting assembly with the capped end on the right engine fuel-feed manifold.

S 036-051

(3) Disconnect the left engine fuel-feed manifold at the quick-disconnect fitting on the left engine strut (AMM 73-11-07/401).

S 496-052

(4) Install the fitting assembly on the left engine fuel-feed manifold.

S 496-061

(5) Connect the air pressure source and the fuel feed test equipment to the fitting assembly on the left engine fuel-feed manifold.

BOEING PROPRIETARY - Copyright (C) - Unpublished Work - See title page for details.

S 796-134
(6) To do a test of the engine fuel-feed manifold, put the valves in these positions:

NOTE: You must position these valves manually.

(a) Make sure the APU fuel shutoff valve is closed.
(b) Make sure the crossfeed valve(s) are open.
(c) Make sure the engine fuel shutoff valves (spar valves) are open.
(d) Make sure the defueling valve is closed.

S 786-108
(7) Pressurize the fuel system to 40 psig.

S 866-065
(8) Stop the air pressure source.

S 976-066
(9) Make a written record of the pressure reduction rate for the next 10 minutes.

S 796-130
(10) Make sure the pressure is 40 psig on the pressure gage for the right engine pressure check equipment.

NOTE: If the pressure at the right engine inlet is 0 psi, one or more of these valves/actuators is closed and must be replaced.

Left Engine Shutoff Valve/Actuator
Crossfeed Valve(s)/Actuator(s)
Right Engine Shutoff Valve/Actuator

S 796-068
(11) If the pressure reduction rate is less than 1.5 psig in 10 minutes, then there are no leaks in the fuel lines or the couplings.
(a) Do this procedure: Put the Airplane Back to Its Usual Condition.

S 796-110
(12) If the pressure reduction rate is more than 1.5 psig in 10 minutes, do the subsequent steps to find the general location of the leak in the fuel-feed manifold:
(a) Close the right engine fuel shutoff valve and do the test again.
(b) If the pressure does not decrease by more than 1.5 psig in 10 minutes, the leak is between the right engine fuel shutoff valve and the right engine.

BOEING PROPRIETARY - Copyright (C) - Unpublished Work - See title page for details.

(c) If the pressure decreases by more than 1.5 psig in 10 minutes, close the crossfeed valve(s) and do the test again.
(d) If the pressure does not decrease by more than 1.5 psig in 10 minutes, the leak is between the crossfeed valve(s) and the right engine fuel shutoff valve.
(e) If the pressure decreases by more than 1.5 psig in 10 minutes, close the left engine fuel shutoff valve and do the test again.
(f) If the pressure does not decrease by more than 1.5 psig in 10 minutes, the leak is between the crossfeed valve(s) and the left engine fuel shutoff valve.
(g) If the pressure decreases by more than 1.5 psig in 10 minutes, the leak is between the left engine fuel shutoff valve and the left engine.

S 796-133

WARNING: OBEY THE PURGING AND FUEL TANK ENTRY PRECAUTIONS. FAILURE TO OBEY THE PRECAUTIONS COULD CAUSE INJURY TO PERSONS OR DAMAGE TO EQUIPMENT.

(13) After you find the general location of the leak, do the purging and entry procedure for the applicable fuel tank (AMM 28-11-00/201) and do these steps to find the exact location of the leak:
(a) Pressurize the fuel-feed manifold at the inlet line for the left engine.
(b) Go into the applicable fuel tank to isolate the leak (AMM 28-11-00/201).
(c) Do a leak check of the fuel-feed lines and couplings in the area where the pressure test failed.
(d) If a coupling has a leak, disconnect the coupling, replace the O-rings, and then connect the coupling (AMM 28-22-07/401).
(e) If a fuel line has a leak, or has damage, remove and install a new fuel line (AMM 28-22-07/401).

S 796-132
(14) After you repair a leak, do these steps:
(a) Pressurize the fuel-feed manifold to 40 psi from the inlet fuel line for the left engine.
(b) If the pressure does not decrease by more than 1.5 psi in 10 minutes, then do this procedure: Put the Airplane Back to Its Usual Condition.

BOEING PROPRIETARY - Copyright (C) - Unpublished Work - See title page for details.

F. Put the Airplane Back to Its Usual Condition

S 786-069
(1) Slowly decrease the air pressure in the fuel system to be at zero psig.

S 096-070
(2) Remove the air pressure source and the fuel feed test equipment from the fitting assembly on the left engine fuel-feed manifold.

S 096-071
(3) Remove the fitting assembly from the left engine fuel-feed manifold.

S 436-072
(4) Connect the left engine fuel-feed manifold at the quick-disconnect fitting on the left engine strut.

S 096-073
(5) Remove the fitting assembly from the right engine fuel-feed manifold.

S 436-074
(6) Connect the right engine fuel-feed manifold at the quick-disconnect fitting on the right engine strut.

S 796-135
(7) Do the steps that follow to do a leak check of the fuel feed tubing at the applicable engine strut quick-disconnect:
(a) Do the Method 2; Fuel Pressure Leak Check procedure in the Fuel Line in the Engine Strut - Coupling O-Ring Installation task (AMM 28-22-07/401).

S 866-079
(8) Move the manual override handle on the engine fuel crossfeed valve(s) to the CLOSED position.

S 866-081
(9) Move the manual override handles on the left and right engine fuel shutoff valves to the CLOSED position.

S 866-083
(10) Move the manual override handle on the APU shutoff valve to the OPEN position.

BOEING PROPRIETARY - Copyright (C) - Unpublished Work - See title page for details.

S 096-042

WARNING: USE THE PROCEDURE IN AMM 32-00-15/201 TO REMOVE THE DOOR LOCKS. THE DOORS OPEN AND CLOSE QUICKLY AND CAN CAUSE INJURY TO PERSONS OR DAMAGE TO EQUIPMENT.

(11) Remove the door locks from the landing gear doors and close the doors (AMM 32-00-15/201).

S 656-044

(12) Refuel the fuel tanks if no more work is necessary.

TASK 28-22-07-286-111

3. Engine Fuel Line and Coupling Damage and Wear Limits Check

A. References

(1) AMM 20-10-09/801, Flareless Tubing

(2) AMM 28-22-07/401, Fuel Lines and Fittings

B. Engine Fuel Line Damage Check

S 216-112

(1) Visually examine all the fuel tubing to make sure it is tightly and correctly attached.

S 436-113

(2) Adjust the installation of the tubes which are not correctly attached (AMM 28-22-07/401).

S 216-114

(3) Visually examine all the fuel tubing for these types of damage and make sure the damage is permitted:

(a) Make an inspection for cracks.

1) No cracks are permitted.

(b) Make an inspection for dents (areas that are pushed into the tubing).

1) All dents must have an area that is large compared to the depth of the dent.

BOEING PROPRIETARY - Copyright (C) - Unpublished Work - See title page for details.

2) No single dent in the tubing is permitted to decrease the diameter of the tube by more than 2.5 percent.
3) If there are multiple dents, the total dent depth (individual depths added together) in any section five times the tube diameter long, must be no more than ten percent of the tube diameter.
4) The dents in the tubing must be farther than one diameter of the tube from the end of the tube.
5) The dents in the tubing must not have an area of more than 0.125 square inch.
6) If the dent is on the outer part of a bend in the tube, the dent must not have a depth of more than 0.015 inch.

(c) Do an inspection for nicks.
1) The nicks in the tubing must have a rounded bottom.
2) The nicks in the tubing must not have a depth of more than 0.004 inch.
3) You must remove all the burrs from the nick if there are some burrs.

(d) Do an inspection for fretting.
1) Fretting must not have a depth of more than 0.004 inch.

(e) Do an inspection for scoring.
1) If you find some small scoring, you can make it smooth again, but obey these conditions:
a) The scoring must not be on the outer part of a bend.
b) You must not remove more than 0.004 inch of metal.

(f) Do an inspection for tubes with a cross section that is not fully circular (tubes with ovality).
1) Calculate the percent ovality with this formula:

$$\text{percent ovality} = \frac{\text{OD Max} - \text{OD Min}}{\text{OD Nominal}} \times 100\%$$

a) OD Max is the maximum outer diameter of the tube
b) OD Min is the minimum outer diameter of the tube
c) OD Nominal is the outer diameter of the tube at a position where the tube is circular or almost circular.

BOEING PROPRIETARY - Copyright (C) - Unpublished Work - See title page for details.

2) The percent ovality must not be more than 10% for tubes with a diameter of less than 2 inches.
3) The percent ovality must not be more than 5% for tubes with a diameter of more than 2 inches.

(g) Wrinkles
1) The height of a wrinkle is the distance between a straight line that touches the high point of a wrinkle and a straight line that touches the low point of a wrinkle.
2) Wrinkles must not have a height larger than the applicable maximum wrinkle height:

Tube Diameter (inches)	Maximum Wrinkle Height (inches)
less than 1	0.020
1 to 1.99	0.030
2 to 2.99	0.040
3 or more	0.050

S 356-115

(4) Repair or replace all the tubes which have damage that is not permitted (AMM 20-10-09/801, AMM 28-22-07/401).

C. Fuel Coupling Damage and Wear Limits Check

S 216-116

(1) Before you install a coupling visually examine the tube ferrule(s), retaining ring(s) and nut(s) for these types of damage and wear limits:
(a) Inspect the area for cracks.
1) Cracks are not permitted.
(b) Inspect the contact areas for dents, nicks, scratches or cuts.
1) Dents, nicks, scratches or cuts are not permitted.
(c) Inspect the retaining ring(s) to make sure the retaining ring(s) are not bent, twisted or out of round (deformed).
1) Deformed retaining rings are not permitted.

BOEING PROPRIETARY - Copyright (C) - Unpublished Work - See title page for details.

(d) Inspect the tube ferrule(s) and nut(s) to make sure all of the contact surfaces are smooth.
  1) Surface areas that are not smooth are not permitted.
(e) Inspect the contact surface(s) that have an O-ring seal for wear.
  1) Worn areas in the contact surfaces that have an O-ring seal are not permitted.
(f) Inspect the tube ferrule and retaining ring for wear.
(g) If the tube ferrule or retaining ring is worn, make sure the wear is within these permitted limits:
  1) Ferrule diameter
    a) Grooves worn into the ferrule as a result of contact with the retaining ring cannot have a groove depth of more than 0.010 inch.
  2) Ferrule lip contact surfaces
    a) The ferrule lip contact surface cannot have a total decrease in the lip thickness of more than 0.010 inch.
  3) Retaining ring inside or outside diameter
    a) The retaining ring inside or outside diameter can not have a total decrease in radial dimension of more than 0.020 inch.
(h) Visually examine the external surfaces of the nut(s) for indications of these types of damage and make sure the damage is permitted:
  1) Do an inspection for cracks.
    a) No cracks are permitted.
  2) Do an inspection for scratches.
    a) The scratches in the couplings must not have a depth of more than 0.004 inch.
  3) Do an inspection for nicks.
    a) The nicks in the couplings must have rounded bottoms.
    b) The nicks in the couplings must not have a depth of more than 0.004 inch.
    c) You must remove all the burrs around the nick.

S 356-117
(2) Repair or replace all the couplings which have damage that is not permitted (AMM 20-10-09/801, AMM 28-22-07/401).

BOEING PROPRIETARY - Copyright (C) - Unpublished Work - See title page for details.

MOTIVE FLOW SCREEN - CLEANING/PAINTING

1. General
   A. The motive flow screens are filters that remove unwanted material from the fuel before it goes into the internal parts of the auto-sumping jet pumps. It is necessary to inspect and clean the motive flow screens regularly.
   B. This procedure contains one task. The task cleans the motive flow screens.

TASK 28-22-08-107-001

2. Clean the Motive Flow Screen (Fig. 701)
   A. Equipment
      (1) Brush, Soft Bristled - Commercially Available
   B. Consumable Materials
      (1) B00074 Solvent - Degreasing, MIL-PRF-680 (Supersedes P-D-680)
      (2) G00034 Cotton Wiper - Process Cleaning Absorbent Wiper (Cheesecloth, gauze), BMS15-5
   C. References
      (1) AMM 28-22-03/401, Main Tank Fuel Boost Pump
      (2) AMM 28-22-05/401, Center Auxiliary Tank Override Pump
   D. Access
      (1) Location Zones
          531 Center Auxiliary Tank (Left)
          532 Main Tank - Inboard of Rib No. 10 (Left)
          631 Center Auxiliary Tank (Right)
          632 Main Tank - Inboard of Rib No. 10 (Right)

      (2) Access Panels
          531AB Auxiliary Tank Access Door (Left)
          532AB Main Tank Access Door (Left)
          631AB Auxiliary Tank Access Door (Right)
          632AB Main Tank Access Door (Right)

   E. Procedure

      S 017-005

      CAUTION: MAKE SURE YOU REMOVE THE MOTIVE FLOW SCREEN, NOT THE DISCHARGE CHECK VALVE FOUND NEXT TO THE MOTIVE FLOW SCREEN. IF YOU REMOVE THE DISCHARGE CHECK VALVE, FUEL LEAKAGE CAN OCCUR.

      (1) Remove the motive flow screen (AMM 28-22-03/401; AMM 28-22-05/401).

BOEING PROPRIETARY - Copyright (C) - Unpublished Work - See title page for details.

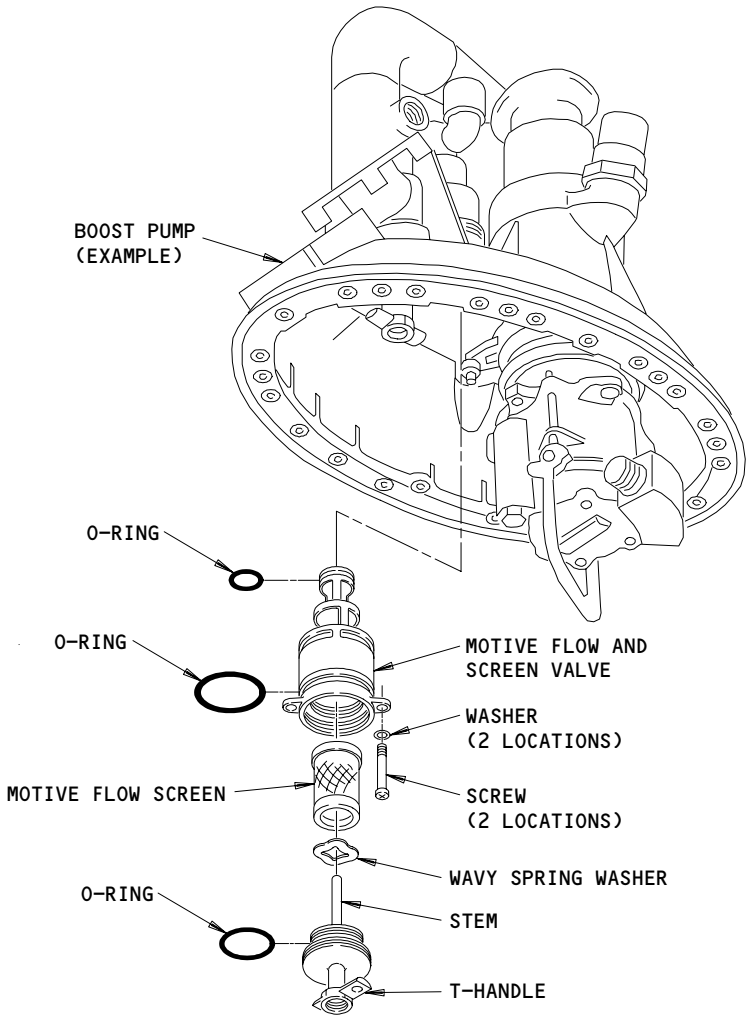

Motive Flow Screen Installation
Figure 701

BOEING PROPRIETARY - Copyright (C) - Unpublished Work - See title page for details.

S 177-002

WARNING: DO NOT GET DRY-CLEANING SOLVENT IN YOUR MOUTH OR EYES, OR ON YOUR SKIN. DO NOT BREATHE THE FUMES FROM THE DRY-CLEANING SOLVENT. PUT ON A PROTECTIVE SPLASH GOGGLE AND GLOVES WHEN YOU USE THE DRY-CLEANING SOLVENT. KEEP THE DRY-CLEANING SOLVENT AWAY FROM SPARKS, FLAME AND HEAT. DRY-CLEANING SOLVENT IS A POISONOUS AND FLAMMABLE SOLVENT WHICH CAN CAUSE INJURY OR DAMAGE.

(2) Flush the motive flow screen with dry-cleaning solvent and use a small brush to remove unwanted materials.
   (a) If you cannot clean the motive flow screen satisfactorily, discard the motive flow screen and get a replacement.

S 167-006

(3) Use a soft cotton wiper (BMS15-5) to dry the motive flow screen.

S 417-004

(4) Install the motive flow screen (AMM 28-22-03/401; AMM 28-22-05/401).

BOEING PROPRIETARY - Copyright (C) - Unpublished Work - See title page for details.

BOOST PUMP VAPOR VENT VALVE - REMOVAL/INSTALLATION

1. General
   A. SAS 150, 152-154 PRE-SB 28-27;
      SAS 050, 051, 162-164;
      MTH 275 PRE-SB 28-27;
      MTH 276;
      The housing on each fuel boost pump in the main fuel tank contains two vapor vent valves. The housing on each override pump in the auxiliary fuel tank contains one vapor vent valve.
   B. SAS 150, 152-154 POST-SB 28-27;
      SAS 052-149, 155-161, 165-999;
      MTH 275 POST-SB 28-27;
      MTH 276-999;
      The housing on each fuel boost pump in the main fuel tank contains two vapor vent valves. The housing on each override/jettison pump in the auxiliary fuel tank contains two vapor vent valves.
   C. The vapor vent valve lets fuel flow through the applicable pump to the fuel tank to lubricate and keep the pump cool.
   D. This procedure contains two tasks. The first task removes the vapor vent valve. The second task installs the vapor vent valve.

TASK 28-22-09-004-011

2. Remove the Vapor Vent Valve (Fig. 401)
   A. References
      (1) AMM 28-11-01/401, Main Tank Access Doors
      (2) AMM 28-11-02/401, Auxiliary Tank Access Doors
   B. Access
      (1) Location Zones
          531 Center Auxiliary Tank (Left)
          532 Main Tank - Inboard of Rib No. 10 (Left)
          631 Center Auxiliary Tank (Right)
          632 Main Tank - Inboard of Rib No. 10 (Right)

      (2) Access Panels
          531BB Auxiliary Tank Access Door (Left)
          532BB Main Tank Access Door (Left)
          631BB Auxiliary Tank Access Door (Right)
          632BB Main Tank Access Door (Right)

   C. Procedure

      S 014-001
      (1) For the vapor vent valve in the left or right main fuel tank, remove the left or right main tank access door, 532BB or 632BB (AMM 28-11-01/401).

BOEING PROPRIETARY - Copyright (C) - Unpublished Work - See title page for details.

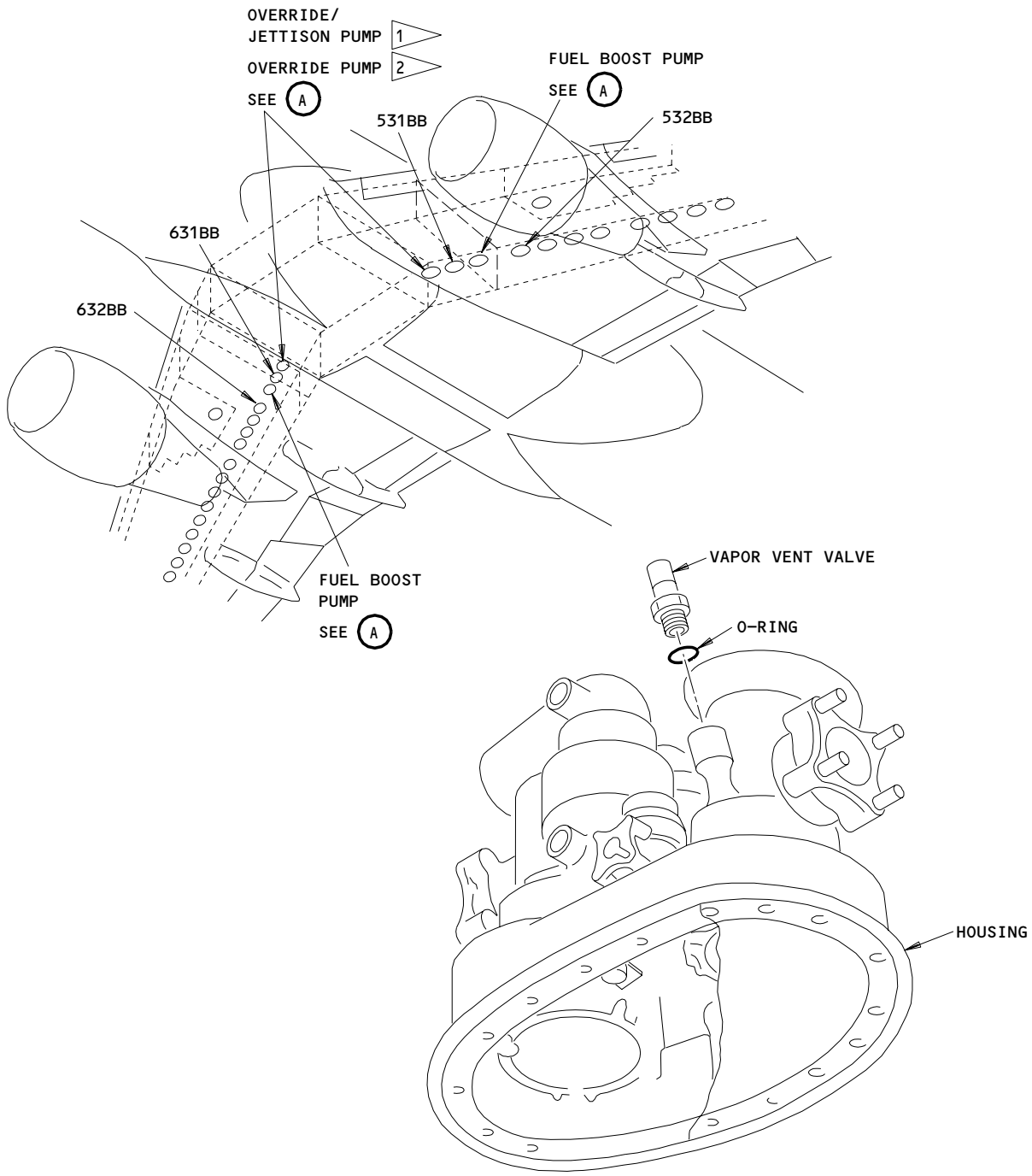

FUEL BOOST PUMP OR OVERRIDE/JETTISON PUMP SHOWN 1
(OVERRIDE PUMP EQUIVALENT) 2

A

1 SAS 150,152-154 POST-SB 28-27; SAS 052-149,155-161, 165-999; MTH 275 POST-SB 28-27; MTH 277-999

2 SAS 150,152-154 PRE-SB 28-27; SAS 050,051,162-164; MTH 275 PRE-SB 28-27; MTH 276

Vapor Vent Valve Installation
Figure 401

BOEING PROPRIETARY - Copyright (C) - Unpublished Work - See title page for details.

S 014-002
(2) For the vapor vent valve in the left or right auxiliary fuel tank, remove the left or right auxiliary tank access door, 531BB or 631BB (AMM 28-11-02/401).

S 024-003
(3) Remove the vapor vent valve and O-ring from the housing on the applicable pump.

TASK 28-22-09-404-004

3. Install the Vapor Vent Valve (Fig. 401)

A. References
(1) AMM 20-10-19/401, O-rings
(2) AMM 28-11-01/401, Main Tank Access Doors
(3) AMM 28-11-02/401, Auxiliary Tank Access Doors

B. Access
(1) Location Zones
531 Center Auxiliary Tank (Left)
532 Main Tank - Inboard of Rib No. 10 (Left)
631 Center Auxiliary Tank (Right)
632 Main Tank - Inboard of Rib No. 10 (Right)

(2) Access Panels
531BB Auxiliary Tank Access Door (Left)
532BB Main Tank Access Door (Left)
631BB Auxiliary Tank Access Door (Right)
632BB Main Tank Access Door (Right)

C. Procedure

S 434-005
(1) Install a new O-ring on the vapor vent valve (AMM 20-10-19/401).

S 424-006
(2) Install the vapor vent valve on the housing of the applicable pump.

S 424-008
(3) Tighten the vapor vent valve to 195-250 pound-inches.

S 434-007
(4) Install lockwire between the vapor vent valve and the pump.

BOEING PROPRIETARY - Copyright (C) - Unpublished Work - See title page for details.

S 414-010

(5) For the vapor vent valve in the left or right main fuel tank, install the left or right main tank access door, 532BB or 632BB (AMM 28-11-01/401).

S 414-009

(6) For the vapor vent valve in the left or right auxiliary fuel tank, install the left or right auxiliary tank access door, 531BB or 631BB (AMM 28-11-02/401).

BOEING PROPRIETARY - Copyright (C) - Unpublished Work - See title page for details.

FLOAT-OPERATED SHUTOFF VALVE - REMOVAL/INSTALLATION

1. General
   A. There are two float-operated shutoff valves: one in the left main fuel tank and one in the right main fuel tank. The float-operated shutoff valves are found next to the fuel boost pumps.
   B. This procedure contains two tasks. The first task removes the float-operated shutoff valve. The second task installs the float-operated shutoff valve.

TASK 28-22-10-004-001

2. Remove Float-Operated Shutoff Valve (Fig. 401)
   A. References
      (1) AMM 28-11-00/201, Fuel Tanks
      (2) AMM 28-11-01/401, Main Tank Access Door
      (3) AMM 28-11-07/401, Fuel Tank Baffle Door
      (4) AMM 28-26-00/201, Defueling
   B. Access
      (1) Location Zones
          532 Main Tank - Inboard of Rib No. 10 (Left)
          632 Main Tank - Inboard of Rib No. 10 (Right)

      (2) Access Panels
          532AZ Fuel Tank Baffle Door (Left)
          532BB Main Tank Access Door (Left)
          632AZ Fuel Tank Baffle Door (Right)
          632BB Main Tank Access Door (Right)

   C. Procedure

      S 654-002
      (1) Defuel the applicable main fuel tank (AMM 28-26-00/201).

      S 654-003
      (2) Drain and purge the applicable main fuel tank (AMM 28-11-00/201).

      S 014-004
      (3) Remove the applicable left or right main tank access door, 532BB or 632BB (AMM 28-11-01/401).

      S 014-005
      (4) Remove the applicable left or right fuel tank baffle door, 532AZ or 632AZ (AMM 28-11-07/401).

      S 944-018

      WARNING: OBEY THE FUEL TANK ENTRY PRECAUTIONS. FAILURE TO OBEY THE FUEL TANK ENTRY PRECAUTIONS COULD CAUSE INJURY TO PERSONS OR DAMAGE TO EQUIPMENT.

      (5) Obey the fuel tank entry precautions (AMM 28-11-00/201).

BOEING PROPRIETARY - Copyright (C) - Unpublished Work - See title page for details.

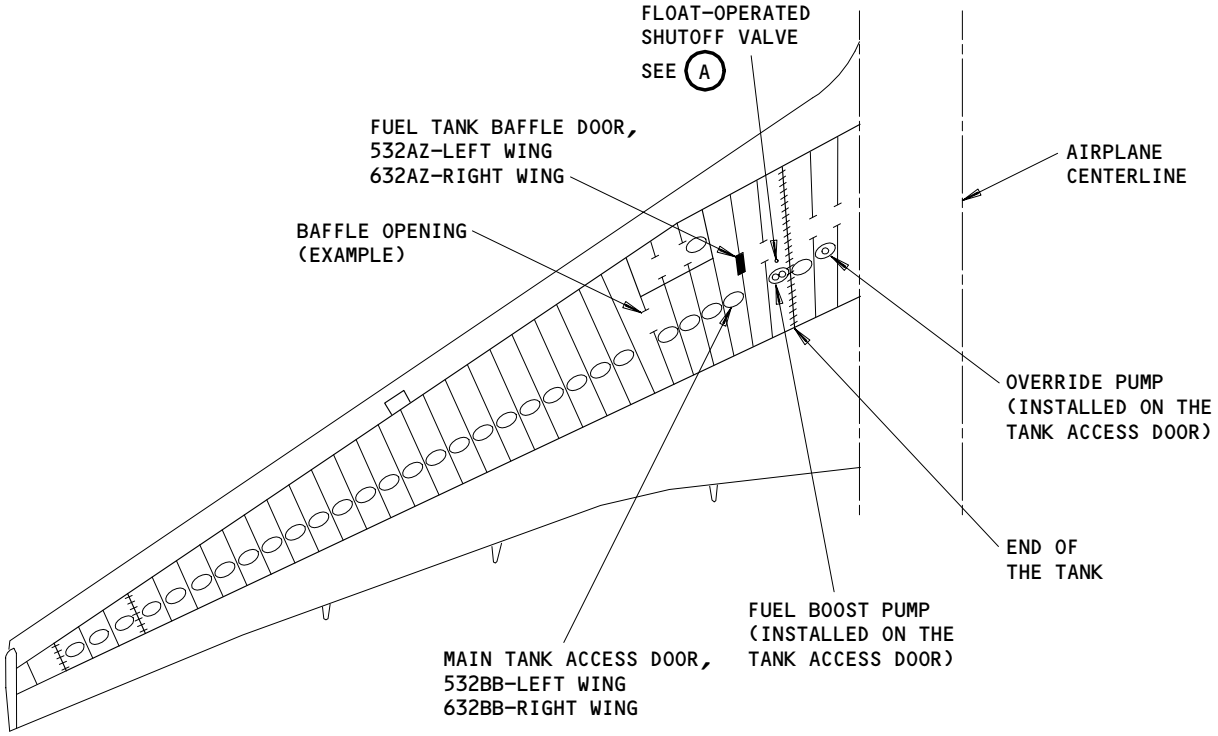

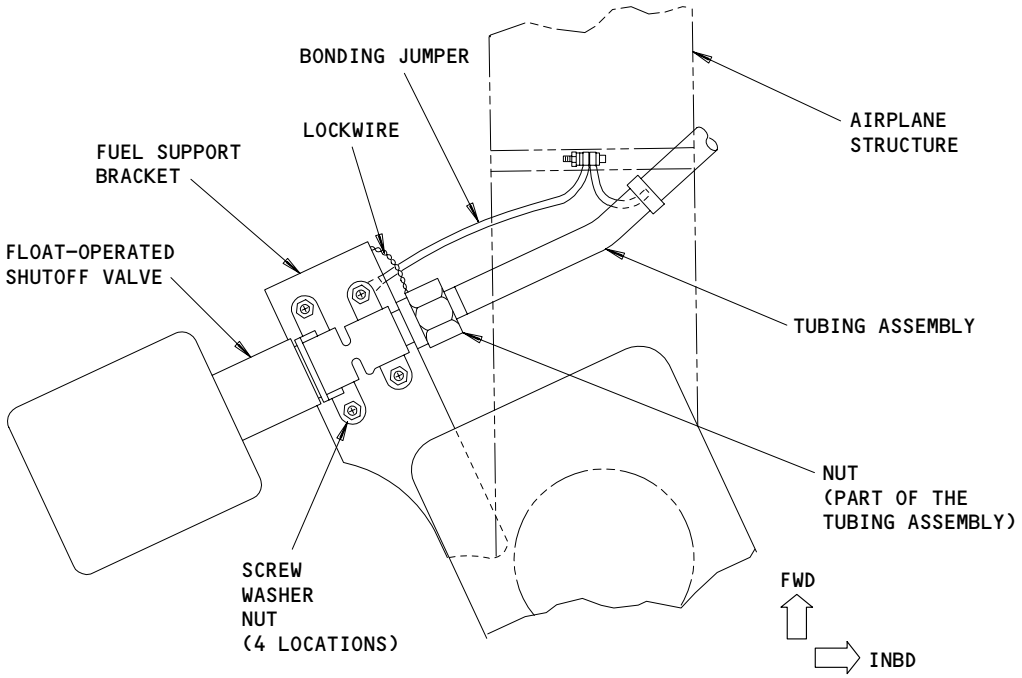

FLOAT-OPERATED SHUTOFF VALVE
(VIEW AS YOU LOOK DOWN)

A

Float-Operated Shutoff Valve Installation
Figure 401

BOEING PROPRIETARY - Copyright (C) - Unpublished Work - See title page for details.

S 034-006

(6) Remove the screws, washers and nuts that attach the float-operated shutoff valve to the fuel support bracket. At the same time disconnect the bonding jumper from the float-operated shutoff valve and the fuel support bracket.

S 034-007

CAUTION: MAKE SURE YOU REMOVE ALL CUT LOCKWIRE FROM THE FUEL TANK. LOOSE LOCKWIRE IN THE FUEL TANK COULD BLOCK THE JET PUMPS AND PREVENT THE SCAVENGE OF FUEL AND WATER.

(7) Cut the lockwire between the nut and the fuel support bracket.

S 024-008

(8) Disconnect the float-operated shutoff valve from the tubing assembly.

S 024-009

(9) Remove the float-operated shutoff valve.

TASK 28-22-10-404-010

3. Install Float-Operated Shutoff Valve (Fig. 401)

A. References

(1) AMM 12-11-01/301, Fuel Tank Pressure Fueling
(2) AMM 20-10-21/601, Electrical Bonding
(3) AMM 28-11-00/201, Fuel Tanks
(4) AMM 28-11-01/401, Main Tank Access Door
(5) AMM 28-11-07/401, Fuel Tank Baffle Door

B. Access

(1) Location Zones

532 Main Tank - Inboard of Rib No. 10 (Left)
632 Main Tank - Inboard of Rib No. 10 (Right)

(2) Access Panels

532AZ Fuel Tank Baffle Door (Left)
532BB Main Tank Access Door (Left)
632AZ Fuel Tank Baffle Door (Right)
632BB Main Tank Access Door (Right)

BOEING PROPRIETARY - Copyright (C) - Unpublished Work - See title page for details.

C. Procedure

S 944-019

WARNING: OBEY THE FUEL TANK ENTRY PRECAUTIONS. FAILURE TO OBEY THE FUEL TANK ENTRY PRECAUTIONS COULD CAUSE INJURY TO PERSONS OR DAMAGE TO EQUIPMENT.

(1) Obey the fuel tank entry precautions (AMM 28-11-00/201).

S 424-011
(2) Connect the float-operated shutoff valve to the tubing assembly.

S 434-012
(3) Install the screws, washers, and nuts to attach the float-operated shutoff valve to the fuel support bracket. At the same time, connect the bonding jumper to the float-operated shutoff valve and the fuel support bracket.

S 434-013
(4) Install lockwire between the nut (part of the tubing assembly) and the fuel support bracket.

S 224-014
(5) Make sure the bonding resistance between the float-operated shutoff valve and the airplane structure is not more than 0.010 ohm (AMM 20-10-21/601).

S 414-015
(6) Install the applicable left or right fuel tank baffle door, 532AZ or 632AZ (AMM 28-11-07/401).

S 414-016
(7) Install the applicable left or right main tank access door, 532BB or 632BB (AMM 28-11-01/401).

S 654-017
(8) Refuel the applicable main fuel tank, if no more work is necessary (AMM 12-11-01/301).

BOEING PROPRIETARY - Copyright (C) - Unpublished Work - See title page for details.

ENGINE FUEL SHUTOFF VALVE ACTUATOR - REMOVAL/INSTALLATION

1. General
   A. There are two engine fuel shutoff valves, one in each main fuel tank. Each engine fuel shutoff consists of three parts: the actuator, the adapter shaft and the valve body. The adapter shaft and valve body are installed on the rear spar of the wing in the fuel tank. The actuator is installed on the rear spar of the wing out of the fuel tank.
   B. It is not necessary to drain the fuel tank to replace the actuator.
   C. Corrosion can occur on the exterior of the fuel shutoff valve actuators, at body joints and fastener heads. If this corrosion gets in past the O-rings, contamination and water can cause malfunctions of the actuators.
   D. Corrosion inhibiting compounds can be used on fuel vapor barriers.
   E. This procedure contains two tasks. The first task removes the actuator of the engine fuel shutoff valve. The second task installs the actuator of the engine fuel shutoff valve.
   F. The removal/installation procedure for the valve body and adapter shaft is given in AMM 28-22-01/401

TASK 28-22-11-004-019

2. Remove the Actuator of the Engine Fuel Shutoff Valve (Fig. 401)
   A. References
      (1) AMM 06-44-00/201, Wing Access Doors and Panels
   B. Access
      (1) Location Zones
          551 Rear Spar to MLG Support Beam (Left)
          651 Rear Spar to MLG Support Beam (Right)

      (2) Access Panels
          551TB Trailing Edge Skin Panel (Left)
          651TB Trailing Edge Skin Panel (Right)

   C. Procedure

      S 864-020
      (1) To remove the left actuator, open this circuit breaker on the main power distribution panel, P6, and attach a DO-NOT-CLOSE tag:
          (a) 6E1, FUEL VALVES L SPAR

      S 864-021
      (2) To remove the right actuator, open this circuit breaker on the main power distribution panel, P6, and attach a DO-NOT-CLOSE tag:
          (a) 6E2, FUEL VALVES R SPAR

      S 014-001
      (3) For the left actuator, remove the left trailing edge skin panel, 551TB (AMM 06-44-00/201).

      S 014-002
      (4) For the right actuator, remove the right trailing edge skin panel, 651TB (AMM 06-44-00/201).

BOEING PROPRIETARY - Copyright (C) - Unpublished Work - See title page for details.

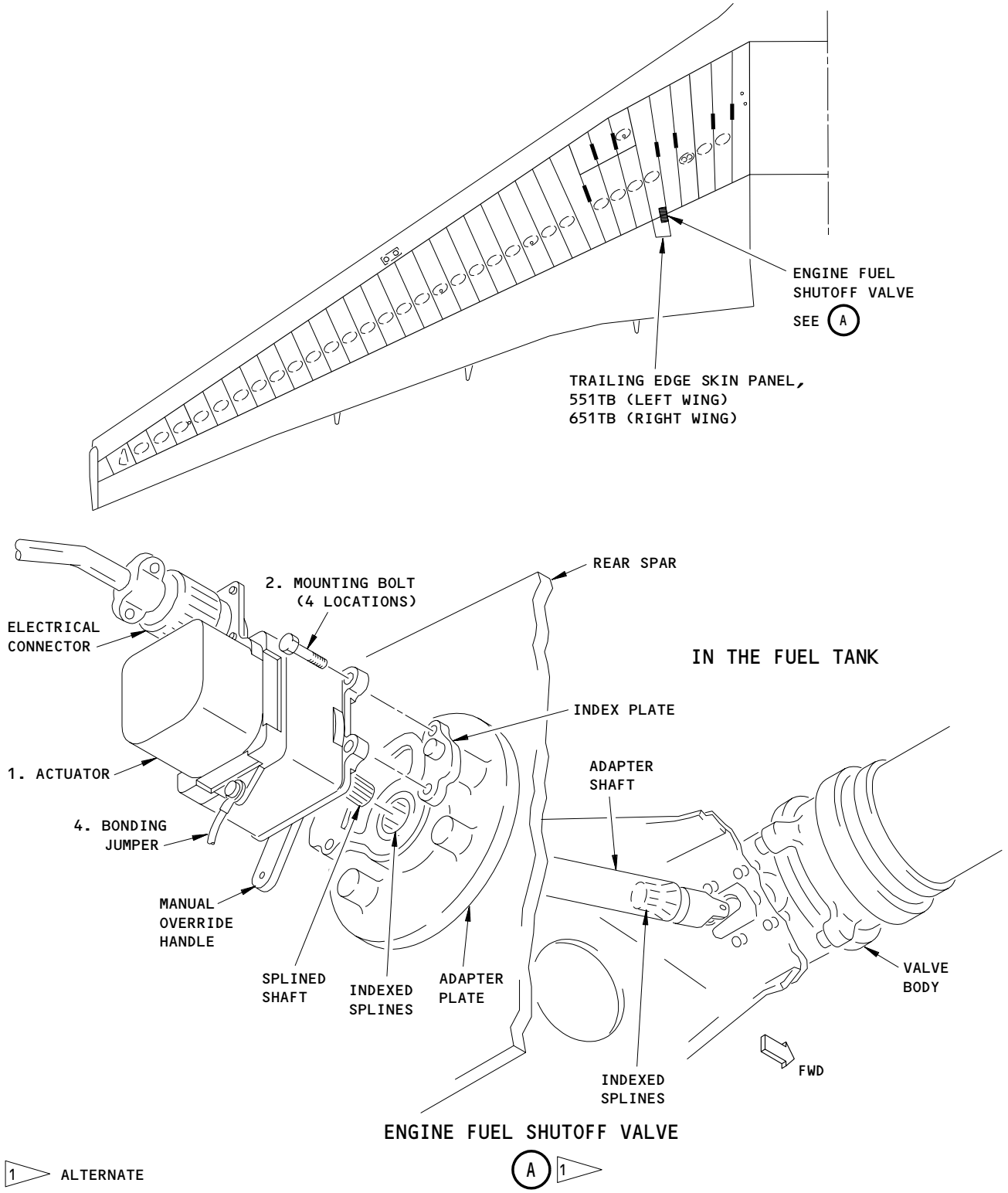

Engine Fuel Shutoff Valve Actuator Installation
Figure 401 (Sheet 1)

BOEING PROPRIETARY - Copyright (C) - Unpublished Work - See title page for details.

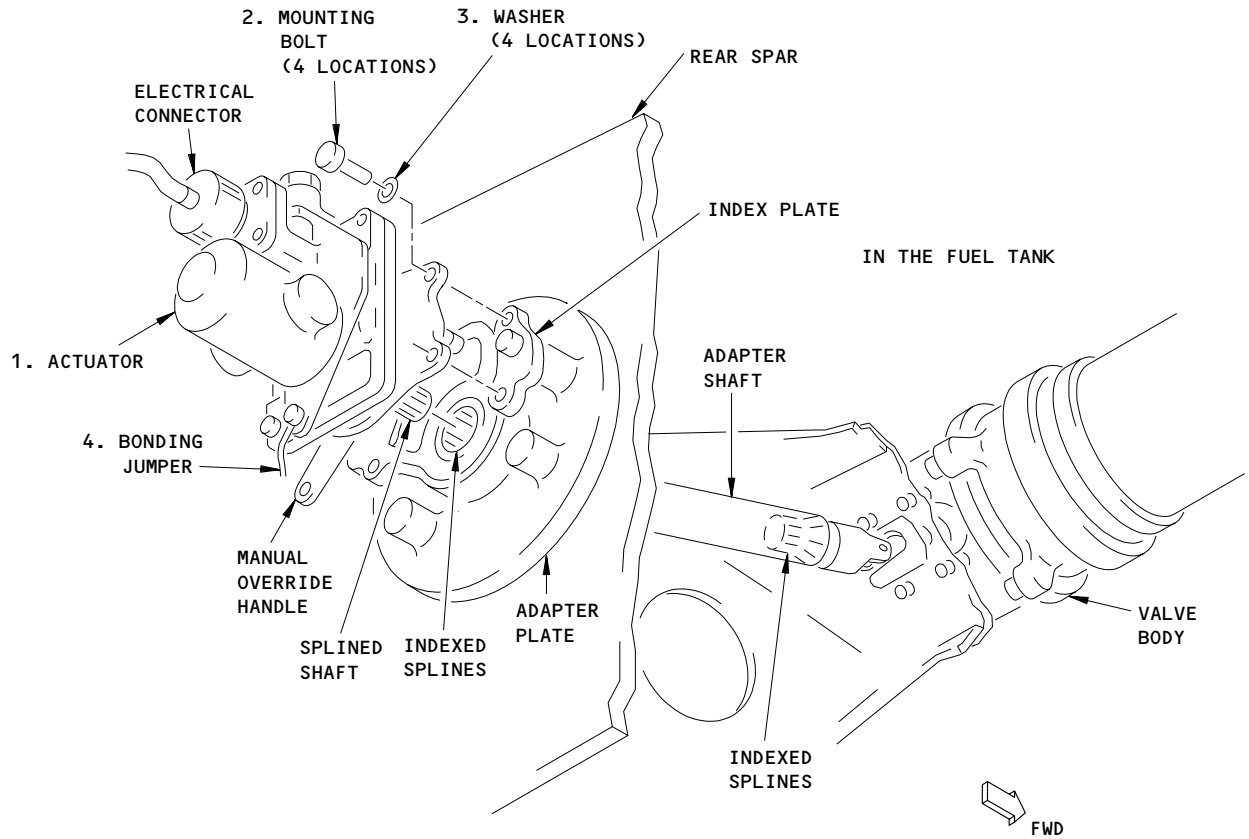

ENGINE FUEL SHUTOFF VALVE

1 ALTERNATE

A 1

Engine Fuel Shutoff Valve Actuator Installation
Figure 401 (Sheet 2)

BOEING PROPRIETARY - Copyright (C) - Unpublished Work - See title page for details.

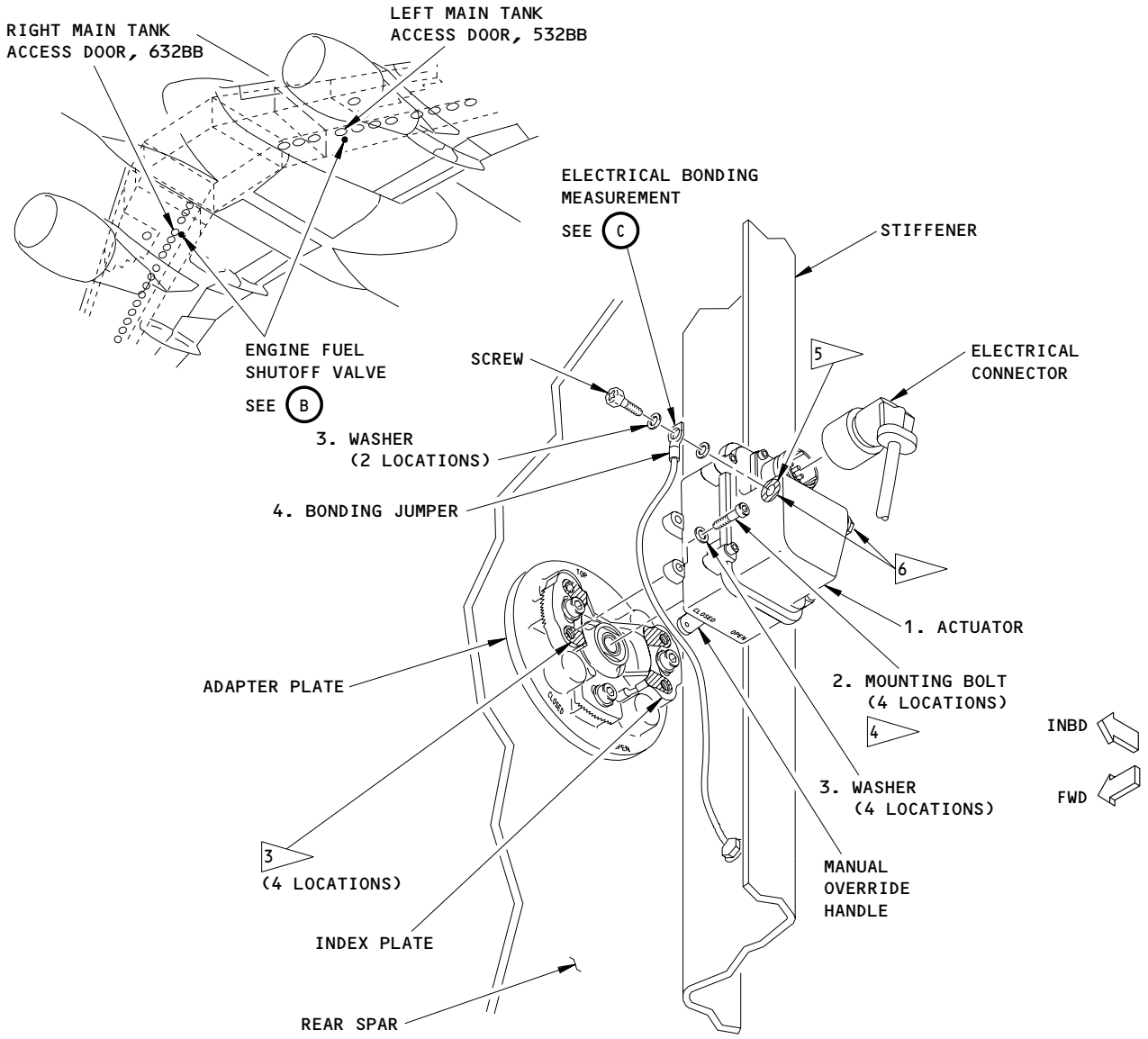

ENGINE FUEL SHUTOFF VALVE ACTUATOR

B 2

2 RECOMMENDED

3 PREPARE AND INSTALL THE CONTACT SURFACES OF THE INDEX PLATE AND ACTUATOR FEET (4 LOCATIONS) WITH A SEALED ELECTRICAL FAYING SURFACE BOND (SWPM 20-20-00).

4 APPLY SEALANT TO THE SHANK AND THREADS OF THE MOUNTING SCREWS.

5 PREPARE AND INSTALL THE CONTACT SURFACES OF ACTUATOR AND BONDING JUMPER BUILD-UP WITH A SEALED ELECTRICAL FAYING SURFACE BOND (SWPM 20-20-00). AFTER INSTALLATION, APPLY A FILLET SEAL TO THE BONDING JUMPER INSTALLATION.

6 THE BONDING JUMPER MAY BE INSTALLED ON EITHER SIDE OF THE ACTUATOR.

Engine Fuel Shutoff Valve Actuator Installation
Figure 401 (Sheet 3)

BOEING PROPRIETARY - Copyright (C) - Unpublished Work - See title page for details.

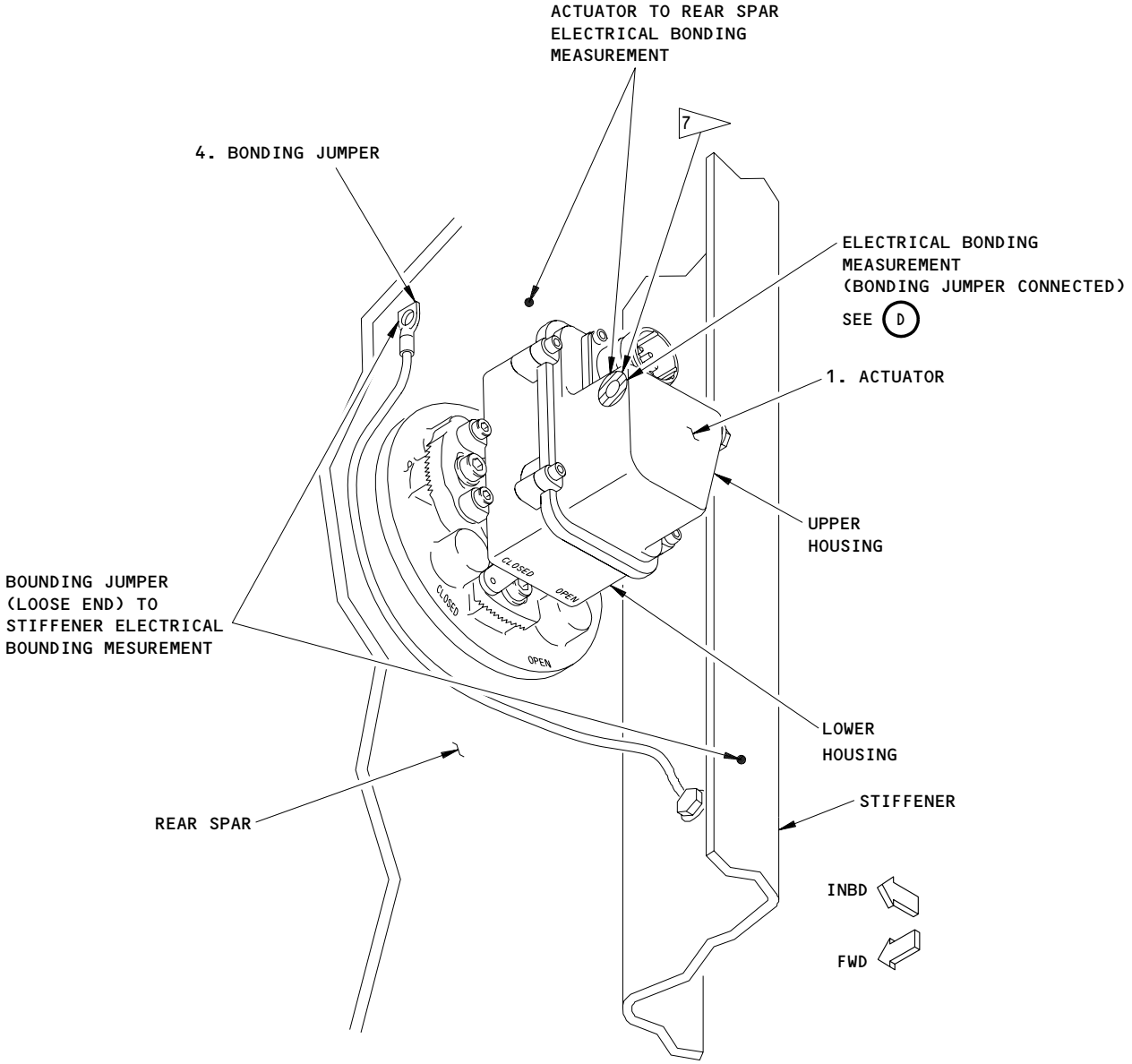

ELECTRICAL BONDING MEASUREMENT
(BONDING JUMPER DISCONNECTED)

C

7 BARE METAL CONTACT SURFACE OF THE ACTUATOR AT THE BONDING JUMPER INSTALLATION.

Engine Fuel Shutoff Valve Actuator Installation
Figure 401 (Sheet 4)

EFFECTIVITY
AIRPLANES WITH ACTUATOR MA20A2027 OR
MA30A1001

1352563

BOEING PROPRIETARY - Copyright (C) - Unpublished Work - See title page for details.

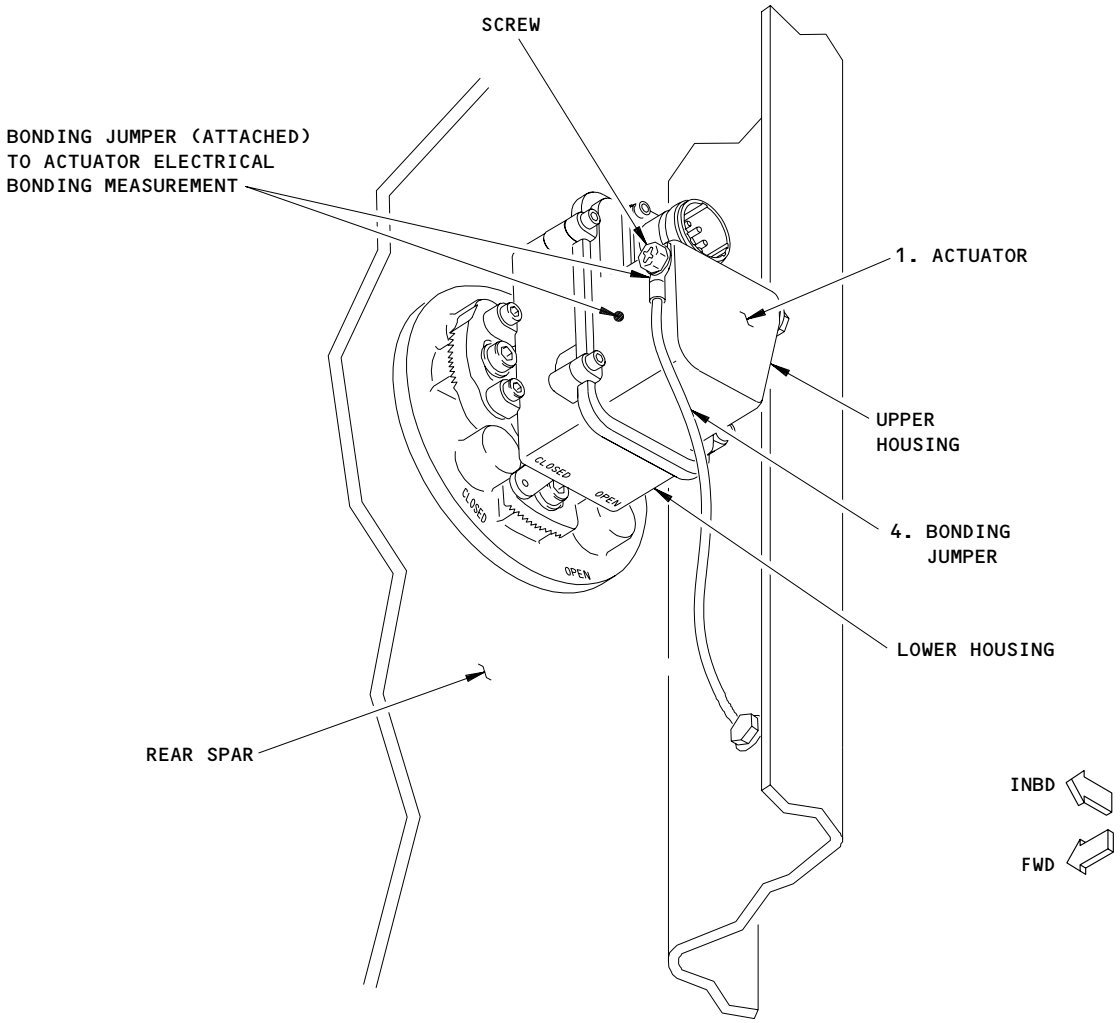

ELECTRICAL BONDING MEASUREMENT
(BONDING JUMPER CONNECTED)

D

Engine Fuel Shutoff Valve Actuator Installation
Figure 401 (Sheet 5)

BOEING PROPRIETARY - Copyright (C) - Unpublished Work - See title page for details.

S 034-003
(5) Remove the electrical connector from the actuator (1).

S 984-004
(6) Put the manual override handle to the CLOSED position.

S 034-005
(7) Disconnect the bonding jumper (4) from the actuator (1).

S 034-006
(8) Remove the mounting bolts (2) that attach the actuator (1) to the adapter plate.

S 024-022
(9) Disengage the splined shaft from the adapter plate.

S 024-007
(10) Remove the actuator (1).

TASK 28-22-11-404-008
3. Install the Actuator of the Engine Fuel Shutoff Valve (Fig. 401)
A. Parts

AMM			AIPC		
FIG	ITEM	NOMENCLATURE	SUBJECT	FIG	ITEM
401	1	Actuator	28-22-02	01	74, 75, 97, 98, 100A,140 157
401	1	Actuator	28-22-02	36	300, 555

B. References
(1) AMM 06-44-00/201, Wing Access Doors and Panels
(2) AMM 20-30-88/201, Airplane Structure Cleaning Solvents (Series 88)
(3) AMM 20-30-92/201, Airplane Structure Cleaning Solvents (Series 92)
(4) AMM 24-22-00/201, Electrical Power Control
(5) AMM 28-11-00/701, Fuel Tanks
(6) AMM 51-21-04/701, Alodine Coating
(7) SWPM 20-20-00, Electrical Bonding and Grounds
C. Equipment
(1) Brush - Soft Bristle
(2) BAC5000 - Sealant Removal Tool
D. Consumable Materials
(1) C00064 Coating - Chemical Conversion Coating for Aluminum or Aluminum Alloys, MIL-C-5541 (MIL-C-81706) - Alodine 600 and 1200

BOEING PROPRIETARY - Copyright (C) - Unpublished Work - See title page for details.

(2) G00034 Cotton Wiper, Process Cleaning Absorbent Wiper (cheesecloth, gauze) BMS15-5
(3) C00307 BMS 10-20, Type II Class A - Finish, Corrosion Resistant
(4) G50021 - Scotch-Brite 96W pad
(5) Sealant, BMS 5-45 Class C
(6) Sealant, BMS 5-95 Class B or C
(7) Sealant, BMS 5-142
(8) B01008 Solvent - Series 88
(9) B01012 Solvent - Series 92

E. Access
(1) Location Zones
551 Rear Spar to MLG Support Beam (Left)
651 Rear Spar to MLG Support Beam (Right)

(2) Access Panels
551TB Trailing Edge Skin Panel (Left)
651TB Trailing Edge Skin Panel (Right)

F. AIRPLANES WITHOUT ACTUATOR MA20A2027 OR MA30A1001;
Install the Actuator of the Engine Fuel Shutoff Valve

S 214-037
(1) Make sure there is no corrosion on the actuator at the body joints and fastener heads.

S 984-018
(2) Move the manual override handle on the actuator (1) to the CLOSED position.

S 424-009
(3) Put the actuator (1) in position against the adapter plate.

S 214-023
(4) Make sure the splined shaft engages.

S 434-010
(5) Install the mounting bolts (2) that attach the actuator (1) to adapter plate.

S 434-024
(6) Install lockwire on the mounting bolts.

S 434-011
(7) Install the bolt, washer and nut to attach the bonding jumper (4) to the actuator (1).

BOEING PROPRIETARY - Copyright (C) - Unpublished Work - See title page for details.

S 434-034
(8) AIRPLANES WITH A REDUNDANT WIRE PATH TO OPEN AND CLOSE THE ENGINE-FUEL-SHUTOFF VALVE (POST-SB 28-66 OR PRR B12901-13S);
Do this step:
Check for continuity betweens pins 5 and 6 in the electrical connector. If there is no continuity, repair the wires. If there is continuity continue with the installation.

S 434-012
(9) Install the electrical connector on the actuator (1).

S 764-049
(10) Measure the bonding resistance between the actuator (1) and the airplane structure (SWPM 20-20-00).
(a) Make sure the resistance is 0.005 ohm or less.

S 864-025
(11) For the left actuator, remove the DO-NOT-CLOSE tag and close this circuit breaker on the P6 panel:
(a) 6E1, FUEL VALVES L SPAR

S 864-026
(12) For the right actuator, remove the DO-NOT-CLOSE tag and close this circuit breaker on the P6 panel:
(a) 6E2, FUEL VALVES R SPAR

S 864-015
(13) Supply electrical power (Ref 24-22-00).

G. AIRPLANES WITH ACTUATOR MA20A2027 OR MA30A1001;
Install the Actuator of the Engine Fuel Shutoff Valve

S 144-040
(1) Remove the old sealant and clean the actuator (1), index plate, and fasteners (if reused).
(a) Use the sealant removal tool and sealant removal tool handle (or equivalent) to remove old sealant from the actuator (1) and index plate.

WARNING: DO NOT GET SOLVENTS IN YOUR MOUTH, YOUR EYES, OR ON YOUR SKIN. DO NOT BREATHE THE FUMES FROM SOLVENTS. SOLVENTS ARE DANGEROUS MATERIALS. SOLVENTS CAN BE FLAMMABLE. OBEY THE MATERIAL SAFETY DATA SHEETS (MSDS) FOR SOLVENTS. OBEY LOCAL REGULATIONS FOR THE CORRECT PROCEDURES TO USE OR DISCARD SOLVENTS. SOLVENTS CAN CAUSE INJURIES TO PERSONNEL AND DAMAGE TO EQUIPMENT.

(b) To remove the remaining sealant, grease, oil, dirt, and other contamination from the components, use one of these items soaked with Series 92 solvent (AMM 20-30-92/201).
1) soft bristle brush

BOEING PROPRIETARY - Copyright (C) - Unpublished Work - See title page for details.

2) cotton wiper
3) Scotch-Brite 96W pad

S 424-041

(2) Do these steps to prepare the actuator (1) and the index plate for a sealed electrical faying surface bond (SWPM 20-20-00):

WARNING: DO NOT GET SOLVENTS IN YOUR MOUTH, YOUR EYES, OR ON YOU SKIN. DO NOT BREATHE THE FUMES FROM SOLVENTS. SOLVENTS ARE DANGEROUS MATERIALS. SOLVENTS CAN BE FLAMMABLE. OBEY THE MATERIAL SAFETY DATA SHEETS (MSDS) FOR SOLVENTS. OBEY LOCAL REGULATIONS FOR THE CORRECT PROCEDURES TO USE OR DISCARD SOLVENTS. SOLVENTS CAN CAUSE INJURIES TO PERSONNEL AND DAMAGE TO EQUIPMENT.

(a) Final clean the contact surfaces with a cotton wiper soaked with Series 88 solvent (AMM 20-30-88/201).
(b) Rub dry with a clean, dry cotton wiper.
(c) Continue to clean and dry the surface until the dry cotton wiper stays clean.
(d) Apply a thin continuous layer of sealant to the actuator contact areas (four locations).

NOTE: CDCCL - Refer to the task: Airworthiness Limitation Precautions (AMM 28-00-00/201), for important information on Critical Design Configuration Control Limitations (CDCCLs).

NOTE: This is applicable to Airworthiness Limitation 28-AWL-23.

1) Use BMS 5-45 Class C or BMS 5-95 Class B or C sealant for the faying surface seal.
2) Make sure the sealant layer is approximately 0.005 inch (0.127 mm) thick.

BOEING PROPRIETARY - Copyright (C) - Unpublished Work - See title page for details.

(e) Apply sealant to the shank and the threads of the mounting bolts (2).

NOTE: CDCCL - Refer to the task: Airworthiness Limitation Precautions (AMM 28-00-00/201), for important information on Critical Design Configuration Control Limitations (CDCCLs).

NOTE: This is applicable to Airworthiness Limitation 28-AWL-23.

1) Use BMS 5-45 Class C or BMS 5-95 Class B or C sealant for the wet installation of the mounting bolts (2).

NOTE: Use the same sealant on the mounting bolts (2) that was used for the faying surface seal.

2) Make sure the sealant applied to the fasteners is approximately 0.060 inch (1.52 mm) thick.

S 424-042

(3) Do these steps to install the actuator (1) to the index plate.
(a) Make sure the manual override handle is in the CLOSED position.
(b) Align the splined shaft with the adapter shaft.
(c) Make sure the two spaces for teeth on the adapter shaft align with the splined shaft.
(d) Put the splined shaft into the actuator shaft.

NOTE: The contact areas of the actuator automatically align with the mounting points on the index plate.

(e) Install the mounting bolts (2) and washers that attach the actuator (1) to the index plate.

NOTE: Lockwire is not necessary for the mounting bolts (2).

(f) Tighten the mounting bolts (2) to 20 in-lb (2.3 Nm).
(g) Make sure the sealant is continuously squeezed out along the edges of the contact surfaces.
(h) If there are gaps, bubbles or voids in the sealant squeeze out, then disassemble and apply more sealant.
(i) Shape the squeezed out sealant into a fillet seal.
(j) As an option, remove the extra squeezed out sealant.

NOTE: Make sure the sealant that remains is flush with the mating part edges.

BOEING PROPRIETARY - Copyright (C) - Unpublished Work - See title page for details.

S 764-043

(4) Measure the electrical bonding resistance between the upper housing of the actuator (at the bare metal bonding jumper installation location) and the rear spar (SWPM 20-20-00).
   (a) Do this measurement with the bonding jumper (4) and the electrical connector disconnected.
   (b) Make sure the bonding jumper (4) does not touch the actuator (1) during the bonding measurement.
   (c) Make sure the bonding resistance is 0.0025 ohm (2.5 milliohms) or less.

   NOTE: CDCCL - Refer to the task: Airworthiness Limitation Precautions (AMM 28-00-00/201), for important information on Critical Design Configuration Control Limitations (CDCCLs).

   NOTE: This is applicable to Airworthiness Limitation 28-AWL-23.

S 764-044

(5) Measure the electrical bonding resistance between the loose end of the bonding jumper (4) and the rear spar (SWPM 20-20-00).
   (a) Make sure the bonding resistance is 0.0015 ohm (1.5 milliohms) or less.

   NOTE: CDCCL - Refer to the task: Airworthiness Limitation Precautions (AMM 28-00-00/201), for important information on Critical Design Configuration Control Limitations (CDCCLs).

   NOTE: This is applicable to Airworthiness Limitation 28-AWL-23.

S 424-045

(6) Do these steps to install the bonding jumper (4) to the actuator (1):
   (a) Final clean the contact surfaces with a cotton wiper soaked with Series 88 solvent (AMM 20-30-88/201).
      1) Rub dry with a clean, dry cotton wiper.
      2) Continue to clean and dry the surface until the dry cotton wiper stays clean.
   (b) Apply a thin continuous layer of sealant to both surfaces of the bonding jumper (4) and the washers.
      1) Use BMS 5-142 sealant for the faying surface seal.
      2) Make sure the sealant layer is approximately 0.005 inch (0.127 mm) thick.
   (c) Install the screw, washers, and nut to attach the bonding jumper (4) to the actuator (1).

BOEING PROPRIETARY - Copyright (C) - Unpublished Work - See title page for details.

(d) AIRPLANES WITHOUT MA30A1001 ACTUATOR;
Tighten the screw to 20 in-lb (2.3 Nm).
(e) AIRPLANES WITH MA30A1001 ACTUATOR;
Tighten the screw to 35 in-lb (4.0 Nm).
(f) Measure the electrical bonding resistance between the upper housing of the actuator (1) and the attached bonding jumper (4) terminal (SWPM 20-20-00).
1) Do not touch the screw when you make the bonding measurement.
2) Make sure the bonding resistance is 0.001 ohm (1 milliohm) or less.

NOTE: CDCCL - Refer to the task: Airworthiness Limitation Precautions (AMM 28-00-00/201), for important information on Critical Design Configuration Control Limitations (CDCCLs).

NOTE: This is applicable to Airworthiness Limitation 28-AWL-23.

(g) Apply a cap seal of BMS 5-142 sealant over the terminal of the bonding jumper (4) and screw.

S 374-046
(7) Do this task to apply protective finishes to the bare areas of the rear spar: Apply the Corrosion Resistant Finish (Topcoat) (AMM 28-11-00/701).

NOTE: Re-apply the protective finishes to the rear spar where the electrical bonding probes removed the finishes.

(a) These are the protective finishes:
1) Alodine 600 coating
2) BMS 10-20 coating

S 914-047
(8) Do this task to apply Alodine 1200 coating to any bare areas of the actuator (1): Apply the Alodine Coating (AMM 51-21-04/701).

NOTE: Re-apply the protective coating to the actuator (1) where the electrical bonding probe removed the finish and any bare metal areas around the bonding jumper installation that are not covered with sealant.

BOEING PROPRIETARY - Copyright (C) - Unpublished Work - See title page for details.

S 434-050

(9) AIRPLANES WITH A REDUNDANT WIRE PATH TO OPEN AND CLOSE THE ENGINE-FUEL-SHUTOFF VALVE (POST-SB 28-66 OR PRR B12901-13S); Do this step:

(a) Check for continuity betweens pins 5 and 6 in the electrical connector. If there is no continuity, repair the wires. If there is continuity continue with the installation.

S 434-048

(10) Install the electrical connector on the actuator (1).

H. Operational Test of the Engine Fuel Shutoff Valve Actuator

S 714-014

(1) Do the steps that follow to do a test of the actuator (1) operation:

(a) Make sure the applicable ENGINE START switch is in the OFF position.

(b) For the left actuator, open this circuit breaker and attach a DO-NOT-CLOSE tag:

1) On the P11 panel:

a) 11D25, ENGINE FUEL CONT VLV L

(c) For the right actuator, open this circuit breaker and attach a DO-NOT-CLOSE tag:

1) On the P11 panel:

a) 11D26, ENGINE FUEL CONT VLV R

(d) Put the applicable L or R FUEL CONTROL switch on the quadrant stand, P10, in the RUN position.

(e) Make sure the SPAR VALVE light comes on and then goes off.

(f) Make sure the manual override handle on the actuator (1) moves to the OPEN position.

(g) Put applicable L or R FUEL CONTROL switch on the P10 panel in the CUTOFF position.

(h) Make sure the SPAR VALVE light comes on and then goes off.

(i) Make sure the manual override handle on the actuator (1) moves to the CLOSED position.

(j) For the left actuator, close this circuit breaker and remove the DO-NOT-CLOSE tag:

1) On the P11 panel:

a) 11D25, ENGINE FUEL CONT VLV L

(k) For the right actuator, close this circuit breaker and remove the DO-NOT-CLOSE tag:

1) On the P11 panel:

a) 11D26, ENGINE FUEL CONT VLV R

I. Put the Airplane Back to Its Usual Condition

S 414-016

(1) Install the applicable left or right trailing edge skin panel, 551TB or 651TB (AMM 06-44-00/201).

S 864-017

(2) Remove electrical power if it is not necessary (AMM 24-22-00/201).

BOEING PROPRIETARY - Copyright (C) - Unpublished Work - See title page for details.

ENGINE FUEL SHUTOFF VALVE ACTUATOR - INSPECTION/CHECK

1. General
   A. This procedure contains a functional check of the bonding resistance between the structure and the shutoff valve actuator (1). There are two engine fuel shutoff valves, one in each main fuel tank.

TASK 28-22-11-706-055

2. Engine Fuel Shutoff Valve - Bonding Resistance Check (Fig. 601, 601A)
   A. Equipment
      (1) Bonding Meter - Use one of these:
         (a) Bonding Meter - T477W
             Avtron Manufacturing Co.
             Cleveland, OH
         (b) Bonding Meter - Model M1
             (Serial Number A000012 and subsequent)
             BCD Electronics Ltd.
             Vancouver, Canada
   B. Consumable Materials
      (1) G00034 Cotton Wiper, Process Cleaning Absorbent Wiper (Cheesecloth, gauze) BMS 15-5
      (2) Sealant, BMS 5-142
      (3) B01008 Solvent - Series 88
   C. References
      (1) AMM 06-44-00/201, Wing Access Doors and Panels
      (2) AMM 20-30-88/201, Airplane Structure Cleaning Solvents (Series 88)
      (3) AMM 32-00-15/201, Landing Gear Door Locks
      (4) AMM 32-00-20/201, Landing Gear Downlocks
      (5) SWPM 20-20-00, Electrical Bonding and Grounds
   D. Access
      (1) Location Zones
          551 Rear Spar to MLG Support Beam (Left)
          651 Rear Spar to MLG Support Beam (Right)

      (2) Access Panels
          551TB Trailing Edge Skin Panel (Left)
          651TB Trailing Edge Skin Panel (Right)

   E. Prepare for the Procedure

      S 866-057
      (1) Open these circuit breakers on the main power distribution panel, P6, and attach a DO-NOT-CLOSE tags:
         (a) 6E1, FUEL VALVES L SPAR

BOEING PROPRIETARY - Copyright (C) - Unpublished Work - See title page for details.

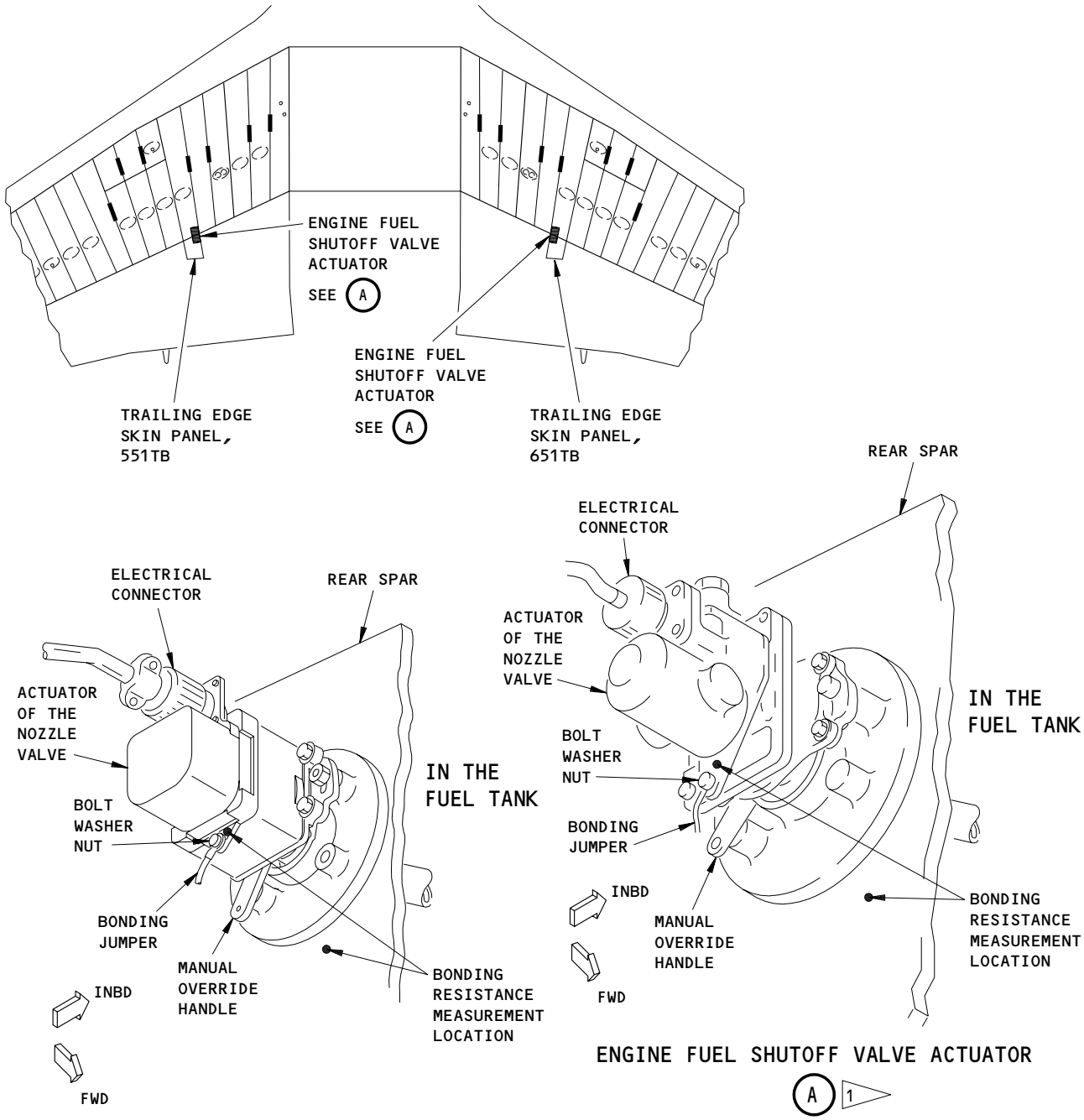

1 ALTERNATE (EXAMPLE)

Engine Fuel Shutoff Valve Actuator Inspection
Figure 601

BOEING PROPRIETARY - Copyright (C) - Unpublished Work - See title page for details.

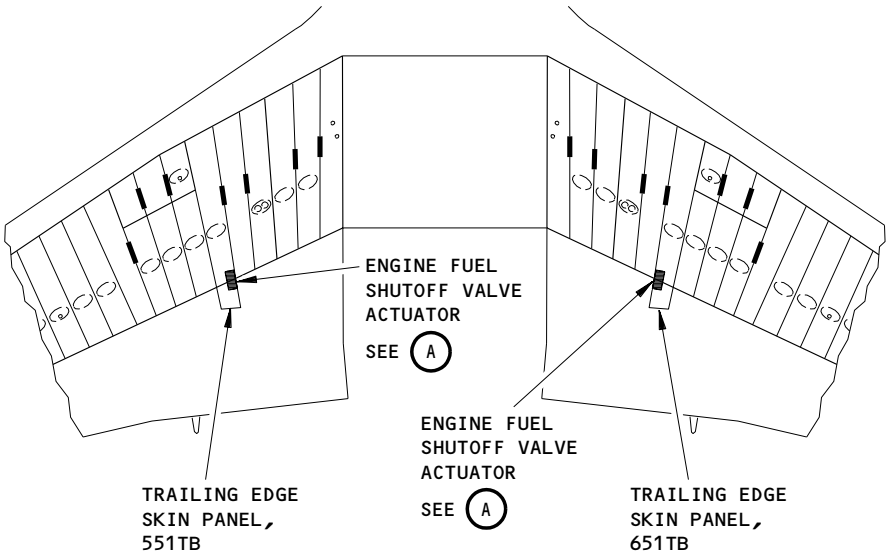

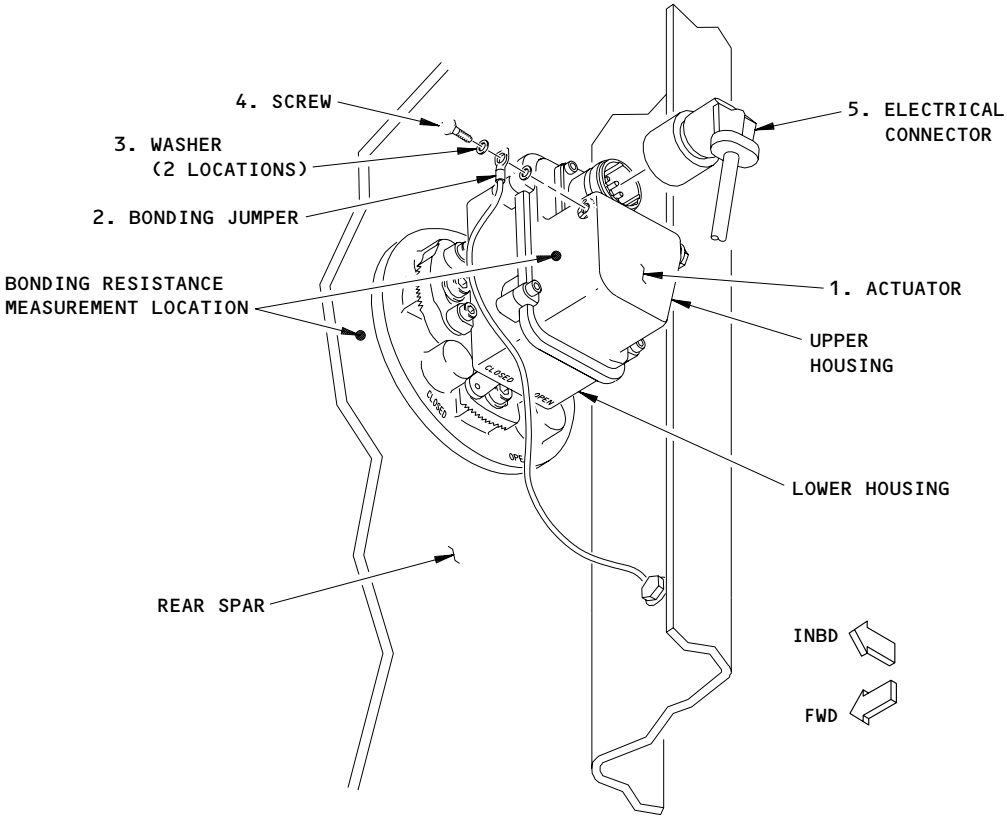

ENGINE FUEL SHUTOFF VALVE ACTUATOR
(EXAMPLE)

A

Engine Fuel Shutoff Valve Actuator Inspection
Figure 601A

BOEING PROPRIETARY - Copyright (C) - Unpublished Work - See title page for details.

(b) 6E2, FUEL VALVES R SPAR

S 486-047

WARNING: MAKE SURE THAT THE DOWNLOCKS ARE INSTALLED IN ALL OF THE LANDING GEAR. WITHOUT THE DOWNLOCKS, THE LANDING GEAR CAN RETRACT AND CAUSE INJURIES TO PERSONS AND DAMAGE TO EQUIPMENT.

(2) Make sure the downlocks are installed in the nose and main landing gear (AMM 32-00-20/201).

S 486-048

WARNING: OBEY THE INSTALLATION PROCEDURE FOR THE DOOR LOCK. THE DOORS OPEN AND CLOSE QUICKLY. THE MOVEMENT OF THE DOORS CAN CAUSE INJURIES TO PERSONS AND DAMAGE TO EQUIPMENT.

(3) Open the doors for the landing gear and install the door locks (AMM 32-00-15/201).

S 016-049
(4) For the left actuator (1), remove the left trailing edge skin panel, 551TB (AMM 06-44-00/201).

S 016-050
(5) For the right actuator (1), remove the right trailing edge skin panel, 651TB (AMM 06-44-00/201).

S 026-058
(6) Disconnect the electrical connector (5) from the actuator.

F. AIRPLANES WITHOUT ACTUATOR MA20A2027 OR MA30A1001; Electrical Bonding Measurement

S 026-059
(1) Disconnect the bonding jumper (2) from the actuator (1).

S 766-051
(2) Measure the bonding resistance between the actuator (1) and the rear spar (SWPM 20-20-00).
(a) Make sure the resistance is 0.005 ohm (5 milliohms) or less.

S 426-060
(3) Connect the screw (4), washers (3), and nut to attach the bonding jumper (2) to the actuator (1).

BOEING PROPRIETARY - Copyright (C) - Unpublished Work - See title page for details.

S 766-061

(4) AIRPLANES WITH A REDUNDANT WIRE PATH TO OPEN AND CLOSE THE ENGINE-FUEL-SHUTOFF VALVE (POST-SB 28-66 OR PRR B12901-13S);
Do a check for continuity between pin 5 and pin 6 in the electrical connector (5).
(a) Repair the wire if there is no continuity.

G. AIRPLANES WITH ACTUATOR MA20A2027 OR MA30A1001;
Electrical Bonding Measurement

S 026-064

(1) Disconnect the bonding jumper (2) from the actuator (1).

S 766-065

(2) Measure the bonding resistance between the actuator (1) and the rear spar (SWPM 20-20-00).
(a) Make sure the resistance is 0.005 ohm (5 milliohms) or less.

S 426-066

(3) Do these steps to install the bonding jumper (2) to the actuator (1).
(a) Clean the contact surfaces with a cotton wiper soaked with Series 88 solvent (AMM 20-30-88/201).
1) Clean the surface until the cotton wiper is clean.
(b) Apply a thin continuous layer of sealant to both surfaces of the bonding jumper (2) and the washers (3).
1) Use BMS 5-142 sealant for the faying surface seal.
(c) Install the screw (4), washers (3), and nut to attach the bonding jumper (2) to the actuator (1).
(d) AIRPLANES WITHOUT ACTUATOR MA30A1001;
Tighten the screw (4) to 20 in-lb (2.3 Nm).
(e) AIRPLANES WITH ACTUATOR MA30A1001;
Tighten the screw (4) to 35 in-lb (4.0 Nm).
(f) Measure the elecrtical bonding resistance between the upper housing of the actuator (1) and the attached bonding jumper (2) terminal (SWPM 20-20-00).
1) Do not touch the screw (4) when you do the bonding measurement.

BOEING PROPRIETARY - Copyright (C) - Unpublished Work - See title page for details.

2) Make sure the bonding resistance is 0.001 ohm (1 milliohm) or less.

NOTE: CDCCL - Refer to the task: Airworthiness Limitation Precautions (AMM 28-00-00/201), for important information on Critical Design Configuration Control Limitations (CDCCLs).

NOTE: This is applicable to Airworthiness Limitation 28-AWL-23.

(g) Apply a cap seal of BMS 5-142 sealant over the terminal of the bonding jumper (2) and screw (4).

H. Put the Airplane Back to Its Usual Condition

S 426-067

(1) Connect the electrical connector (5) on the actuator (1).

S 416-052

(2) Install the applicable left or right trailing edge skin panel, 551TB or 651TB (AMM 06-44-00/201).

S 866-068

(3) Remove the DO-NOT-CLOSE tags, and close these circuit breakers:
(a) On the P6 panel:
1) 6E1, FUEL VALVES L SPAR
2) 6E2, FUEL VALVES R SPAR

S 086-053

WARNING: OBEY THE REMOVAL PRECEDURE FOR THE DOOR LOCKS. THE DOORS OPEN AND CLOSE QUICKLY. THE MOVEMENT OF THE DOORS CAN CAUSE INJURIES TO PERSONS AND DAMAGE TO EQUIPMENT.

(4) Remove the door locks from the main gear doors and close the doors (AMM 32-00-15/201).

BOEING PROPRIETARY - Copyright (C) - Unpublished Work - See title page for details.

ENGINE FUEL CROSSFEED VALVE ACTUATOR - REMOVAL/INSTALLATION

1. General
   A. The engine fuel crossfeed valve contains three parts: the actuator, the adapter shaft and the valve body. The engine fuel crossfeed valve is installed on the rear spar in the left wheel well. The adapter shaft and valve body are installed in the fuel tank. The actuator is installed out of the fuel tank.
   B. It is not necessary to drain the fuel tank to replace the actuator.
   C. This procedure contains two tasks. The first task removes the actuator of the engine fuel crossfeed valve. The second task installs the actuator of the engine fuel crossfeed valve.
   D. The procedure to remove and install the adapter shaft and the valve body is given in AMM 28-22-02/401.

TASK 28-22-12-004-020

2. Remove the Actuator of the Engine Fuel Crossfeed Valve (Fig. 401)
   A. References
      (1) AMM 32-00-15/201, Landing Gear Door Locks
      (2) AMM 32-00-20/201, Landing Gear Downlocks
   B. Access
      (1) Location Zones
            133 Wing Center Section (Left)
            531 Center Auxiliary Tank (Left)

   C. Procedure

      S 864-259
      (1) AIRPLANES WITH A SINGLE ENGINE FUEL CROSSFEED VALVE (PRE-SB 28-34);
      Open this circuit breaker on the overhead circuit breaker panel, P11, and attach a DO-NOT-CLOSE tag:
      (a) 11D36, FUEL CROSSFEED VALVE

      S 864-260
      (2) AIRPLANES WITH FORWARD AND AFT ENGINE FUEL CROSSFEED VALVES (POST-SB 28-34 OR PRR12221);
      Open these circuit breakers on the overhead circuit breaker panel, P11, and attach DO-NOT-CLOSE tags:
      (a) 11M20, FWD FUEL CROSSFEED VALVE

BOEING PROPRIETARY - Copyright (C) - Unpublished Work - See title page for details.

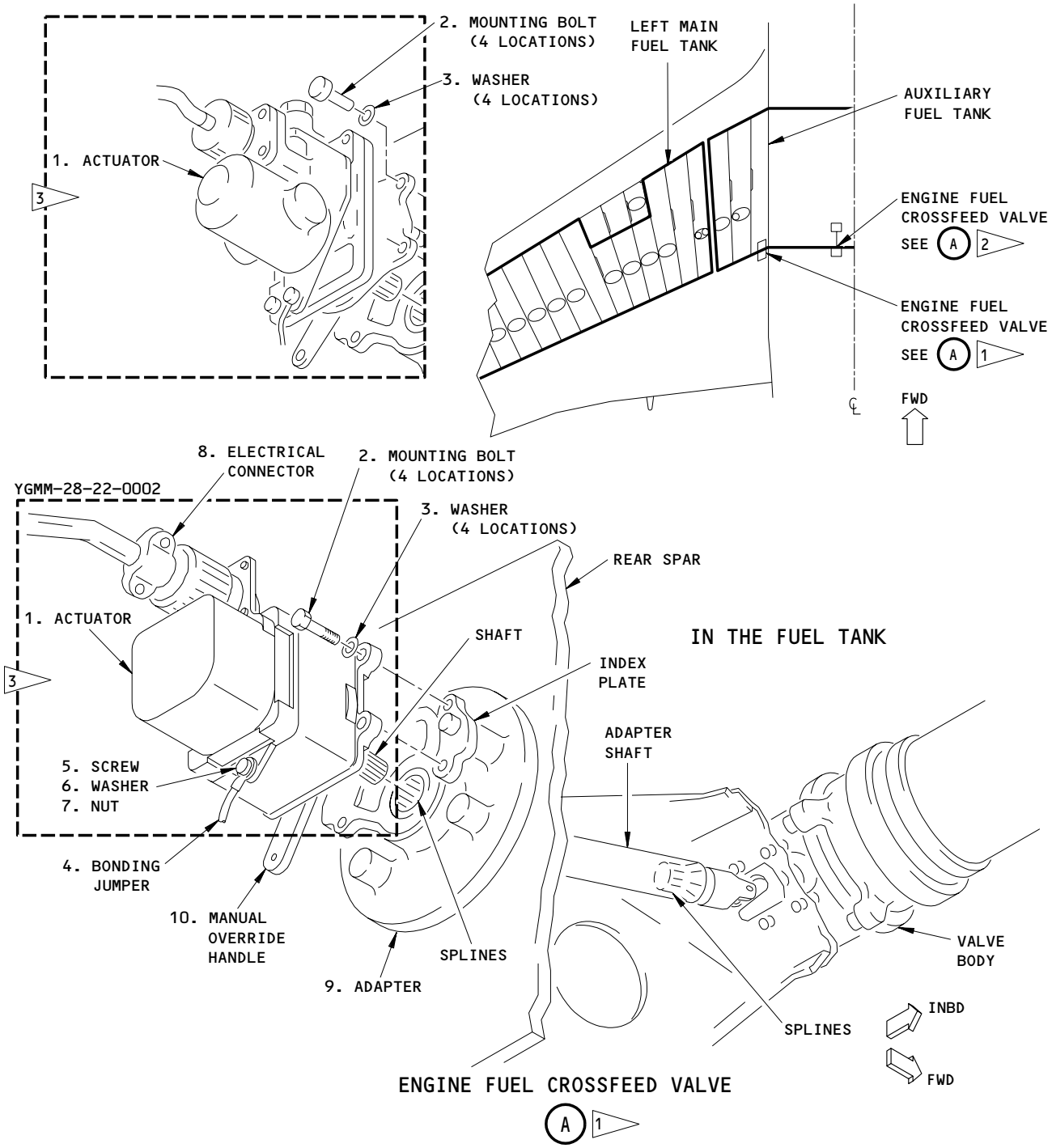

1 AIRPLANES WITH ENGINE FUEL CROSSFEED VALVE IN LEFT AUXILIARY FUEL TANK (PRE-SB 28-34)

2 AIRPLANES WITH ENGINE FUEL CROSSFEED VALVE IN CENTER AUXILIARY FUEL TANK (PRE-SB 28-34)

3 ALTERNATE

Engine Fuel Crossfeed Valve Actuator Installation
Figure 401 (Sheet 1)

EFFECTIVITY
AIRPLANES WITH A SINGLE ENGINE FUEL CROSSFEED VALVE (PRE-SB 28-34) AND WITHOUT ACTUATOR MA20A2027 OR MA30A1001

BOEING PROPRIETARY - Copyright (C) - Unpublished Work - See title page for details.

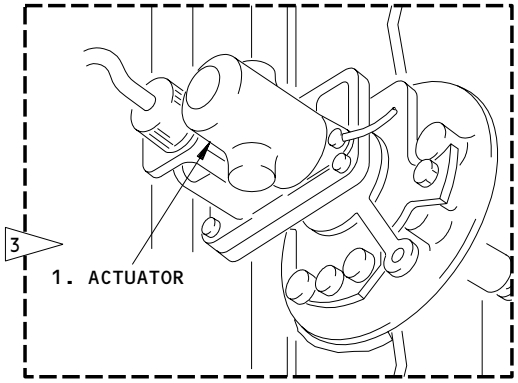

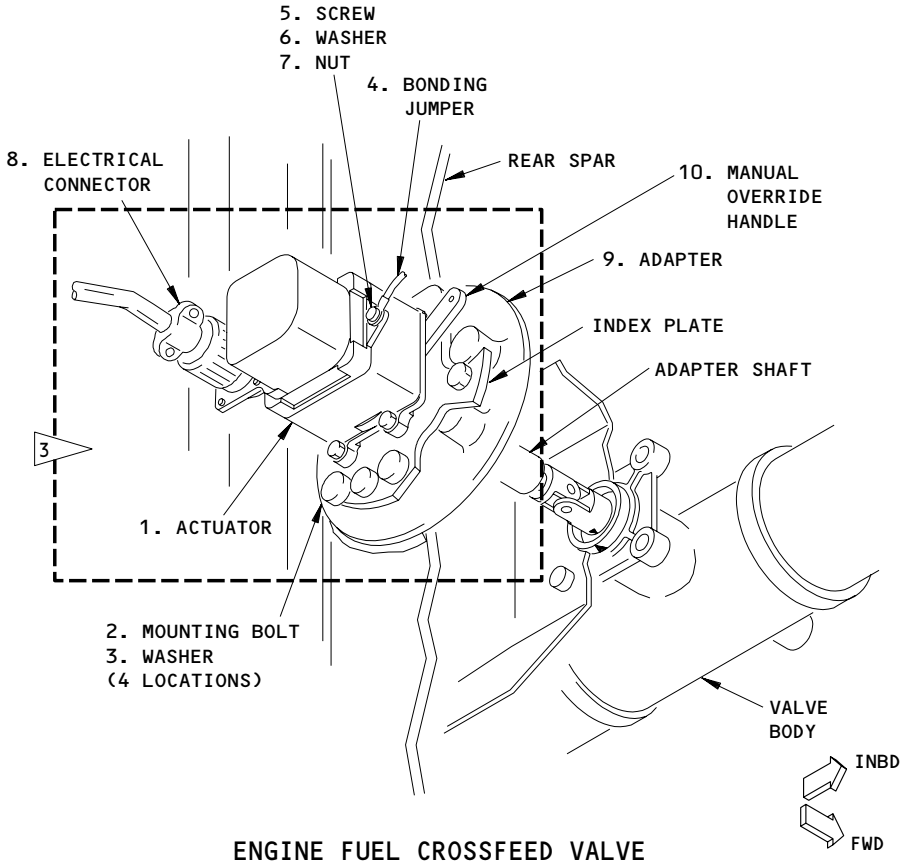

ENGINE FUEL CROSSFEED VALVE

A 2

Engine Fuel Crossfeed Valve Actuator Installation
Figure 401 (Sheet 2)

BOEING PROPRIETARY - Copyright (C) - Unpublished Work - See title page for details.

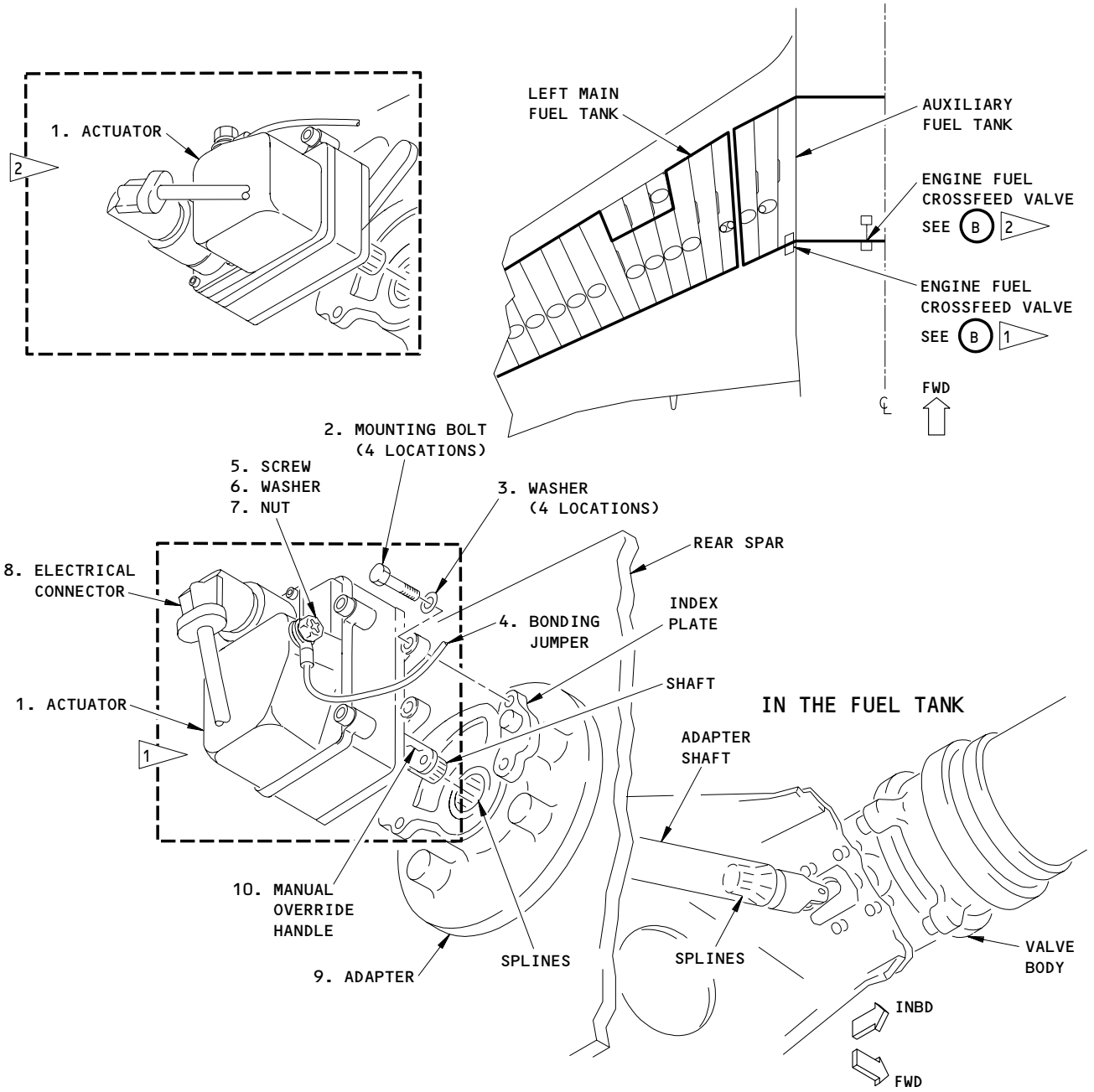

ENGINE FUEL CROSSFEED VALVES

B 4

4 RECOMMENDED

Engine Fuel Crossfeed Valve Actuator Installation
Figure 401 (Sheet 3)

EFFECTIVITY
AIRPLANES WITH A SINGLE ENGINE FUEL CROSSFEED VALVE AND WITH ACTUATOR MA20A2027 OR MA30A1001

BOEING PROPRIETARY - Copyright (C) - Unpublished Work - See title page for details.

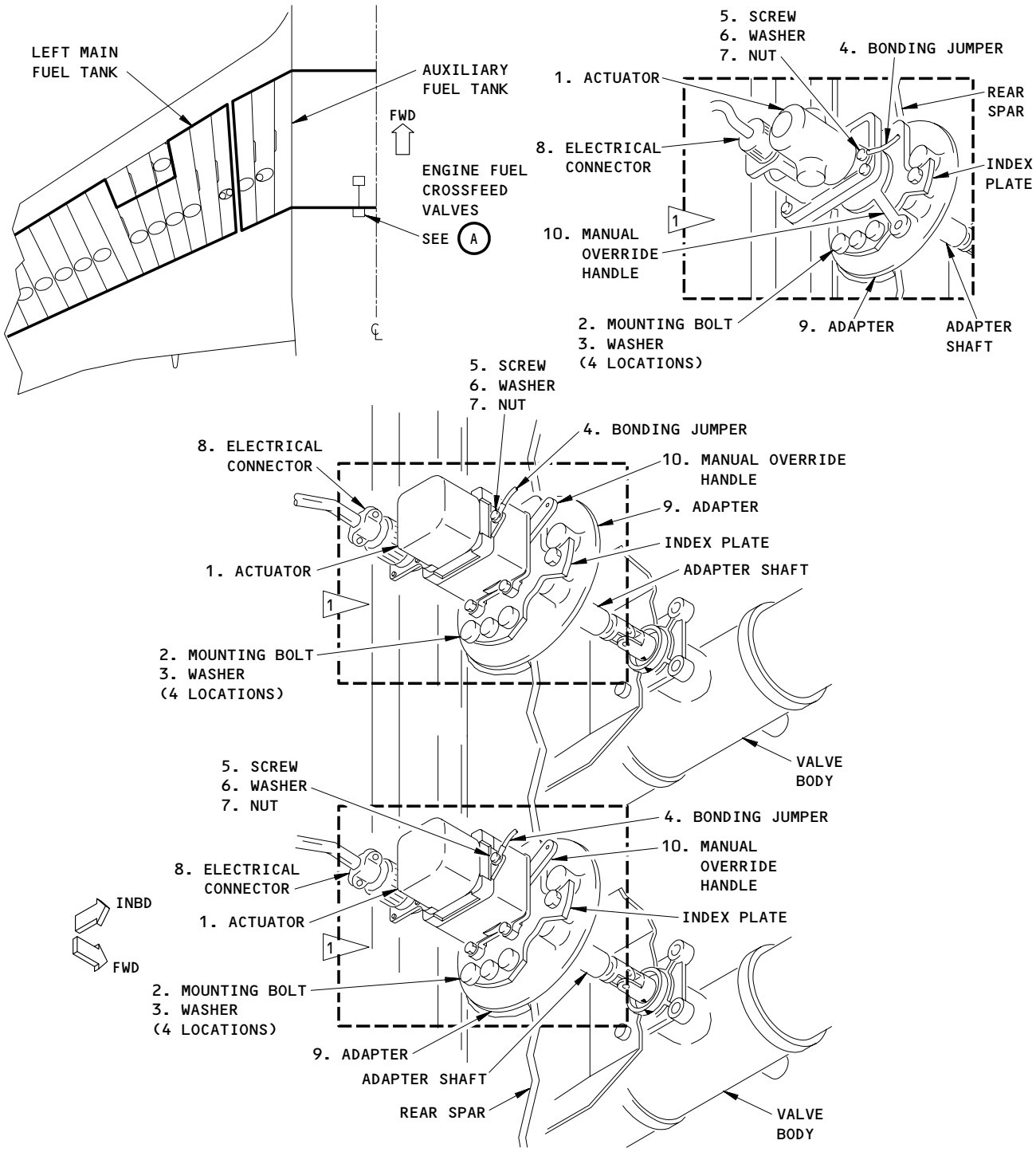

Engine Fuel Crossfeed Valve Actuator Installation
Figure 401A (Sheet 1)

EFFECTIVITY
AIRPLANES WITH FORWARD AND AFT ENGINE FUEL CROSSFEED VALVES (POST-SB 28-34 OR PRR12221) AND WITHOUT ACTUATOR MA20A2027 OR MA30A1001

BOEING PROPRIETARY - Copyright (C) - Unpublished Work - See title page for details.

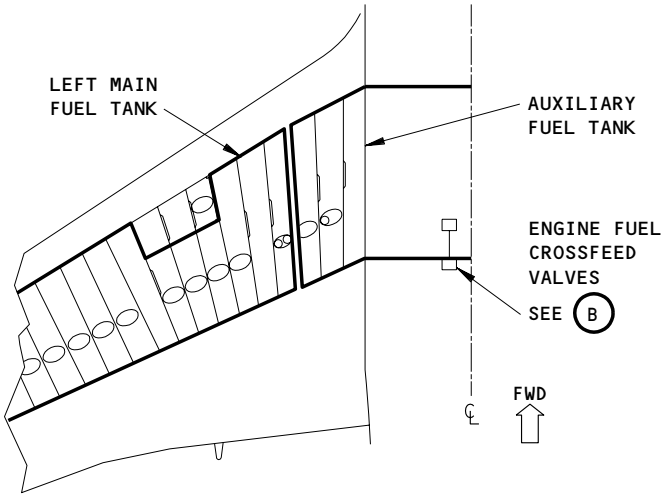

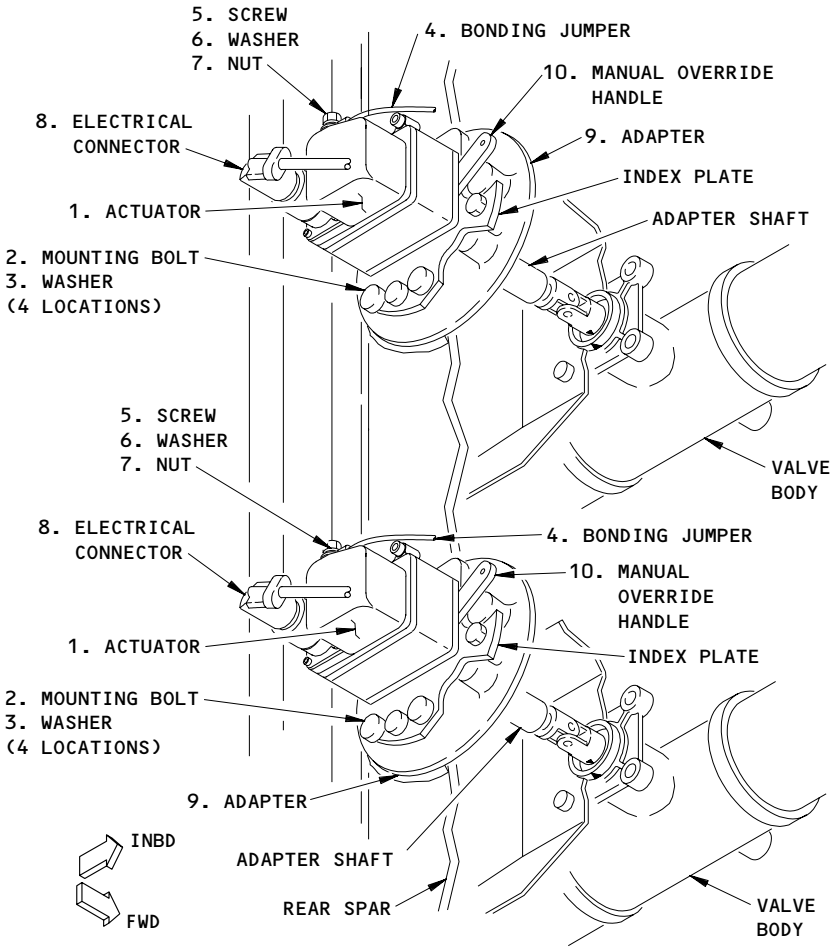

ENGINE FUEL CROSSFEED VALVES

2 RECOMMENDED

B 2

Engine Fuel Crossfeed Valve Actuator Installation
Figure 401A (Sheet 2)

EFFECTIVITY
AIRPLANES WITH FORWARD AND AFT ENGINE FUEL CROSSFEED VALVES (POST-SB 28-34 OR PRR 12221) AND WITH ACTUATOR MA20A2027 OR MA30A1001

BOEING PROPRIETARY - Copyright (C) - Unpublished Work - See title page for details.

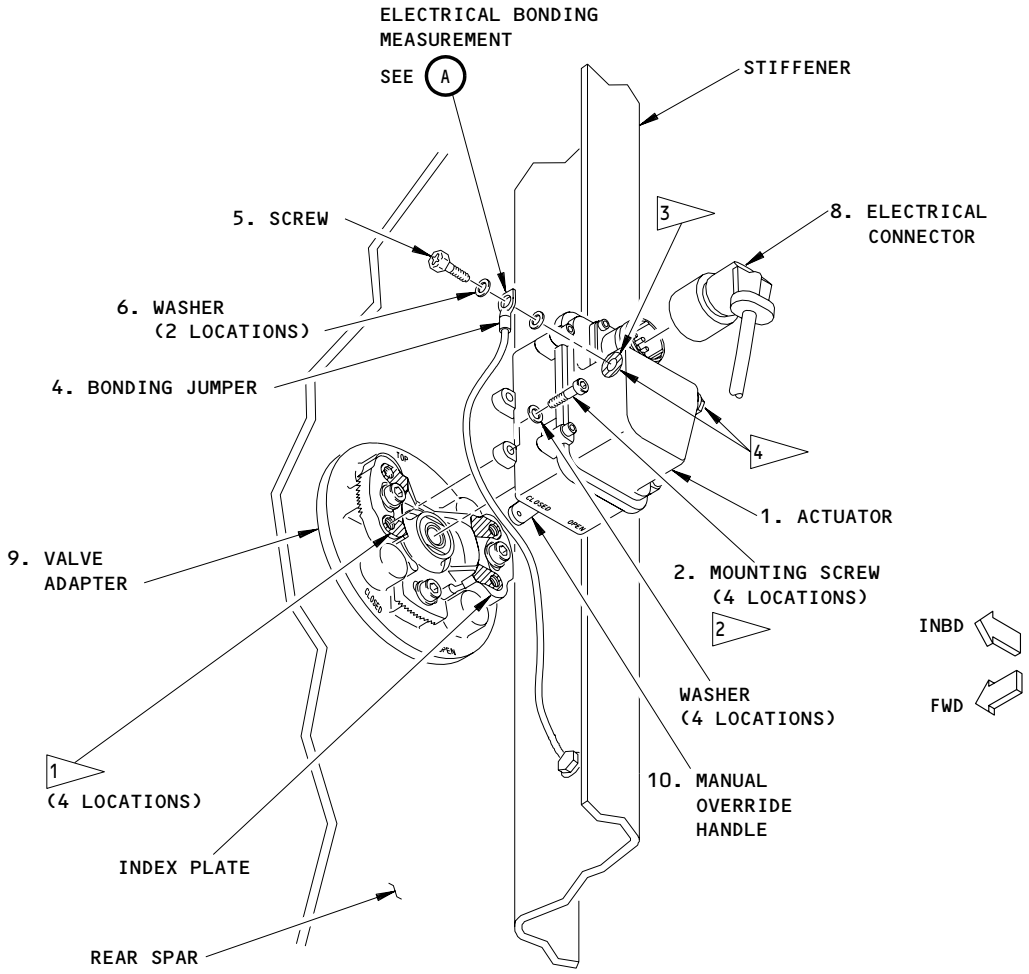

CROSSFEED VALVE ACTUATOR

1. PREPARE AND INSTALL THE CONTACT SURFACES OF THE INDEX PLATE AND ACTUATOR FEET (4 LOCATIONS) WITH A SEALED ELECTRICAL FAYING SURFACE BOND (SWPM 20-20-00).
2. APPLY SEALANT TO THE SHANK AND THREADS OF THE MOUNTING SCREWS.
3. PREPARE AND INSTALL THE CONTACT SURFACES OF ACTUATOR AND BONDING JUMPER BUILD-UP WITH A SEALED ELECTRICAL FAYING SURFACE BOND (SWPM 20-20-00). AFTER INSTALLATION, APPLY A FILLET SEAL TO THE BONDING JUMPER INSTALLATION.
4. THE BONDING JUMPER MAY BE INSTALLED ON EITHER SIDE OF THE ACTUATOR.

Engine Fuel Crossfeed Valve Actuator Installation
Figure 402 (Sheet 1)

BOEING PROPRIETARY - Copyright (C) - Unpublished Work - See title page for details.

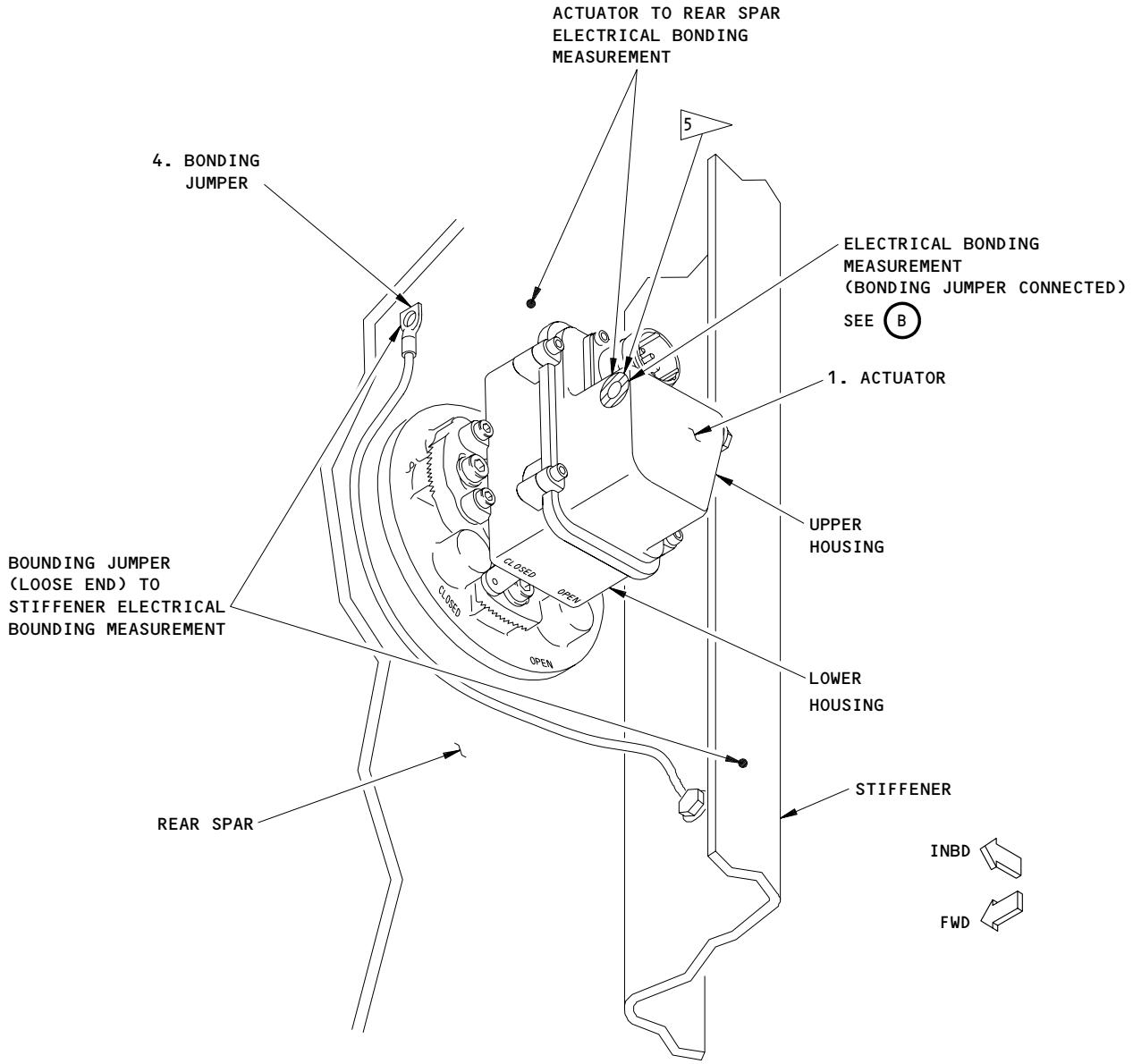

ELECTRICAL BONDING MEASUREMENT
(BONDING JUMPER DISCONNECTED)

A

5 BARE METAL CONTACT SURFACE OF THE ACTUATOR AT THE BONDING JUMPER INSTALLATION.

Engine Fuel Crossfeed Valve Actuator Installation
Figure 402 (Sheet 2)

EFFECTIVITY
AIRPLANES WITH ACTUATOR MA20A2027 OR
MA30A1001

1352740

BOEING PROPRIETARY - Copyright (C) - Unpublished Work - See title page for details.

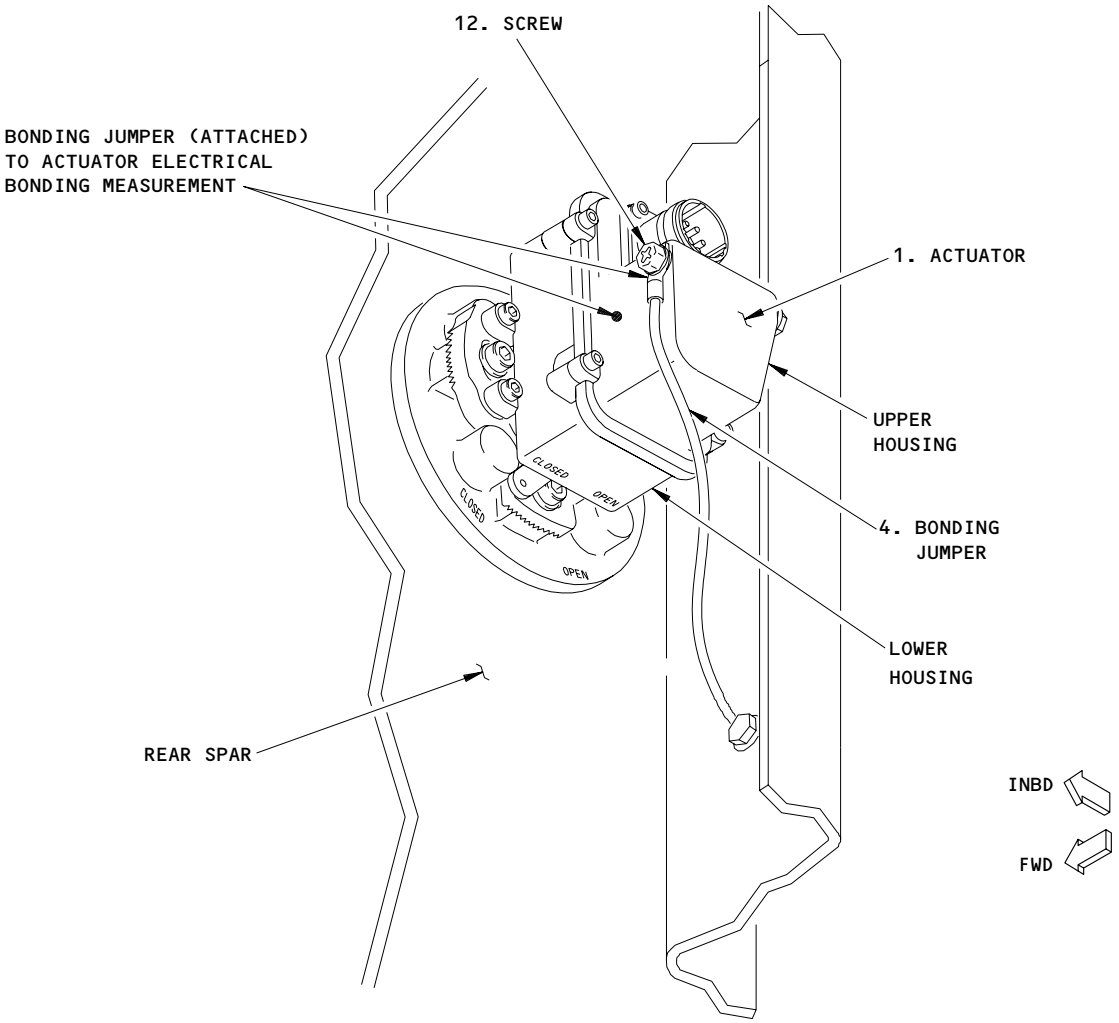

ELECTRICAL BONDING MEASUREMENT
(BONDING JUMPER CONNECTED)

B

Engine Fuel Crossfeed Valve Actuator Installation
Figure 402 (Sheet 3)

EFFECTIVITY
AIRPLANES WITH ACTUATOR MA20A2027 OR
MA30A1001

1352741

BOEING PROPRIETARY - Copyright (C) - Unpublished Work - See title page for details.

(b) 11M21, AFT FUEL CROSSFEED VALVE
(c) 11D36, CROSSFEED IND

S 864-032

WARNING: DO THE DEACTIVATION PROCEDURE FOR THE LATERAL CENTRAL CONTROL ACTUATOR. MOVEMENT OF THE CONTROL COULD CAUSE THE ACTUATOR TO OPERATE. INJURY COULD OCCUR TO PERSONS NEAR THE ACTUATOR.

(3) Move the FLT CONTROL SHUTOFF WING L, R, and C switches on the right side panel, P61, to the OFF position.

S 864-021
(4) Attach DO-NOT-OPERATE tags and make sure the amber switch-position legend lights come ON.

S 864-002
(5) Open these circuit breakers on the overhead circuit breaker panel, P11, and attach DO-NOT-CLOSE tags:
(a) 11H15, FLT CONT SHUTOFF WING L
(b) 11H16, FLT CONT SHUTOFF WING C
(c) 11H26, FLT CONT SHUTOFF WING R

S 864-003
(6) Attach DO-NOT-OPERATE tags to the left and right airplane control wheels.

S 214-004
(7) Make sure the downlocks are installed on the nose and main landing gear (AMM 32-00-20/201).

S 494-005

WARNING: USE THE PROCEDURE IN AMM 32-00-15/201 TO INSTALL THE DOOR LOCKS. THE DOORS OPEN AND CLOSE QUICKLY AND CAN CAUSE INJURY TO PERSONS OR DAMAGE TO EQUIPMENT.

(8) Open the doors for the landing gear and install the door locks (AMM 32-00-15/201).

S 214-006
(9) Make sure the manual override handle (10) on the actuator (1) is in the CLOSED position.

S 034-007
(10) Disconnect the electrical connector (8) from the actuator (1).

S 034-031
(11) Disconnect the bonding jumper (4) from the actuator (1).

BOEING PROPRIETARY - Copyright (C) - Unpublished Work - See title page for details.

S 034-008
(12) Remove the mounting bolts (2) that attach the actuator (1) to the adapter (9).

S 024-022
(13) Disengage the shaft on the actuator (1) from the adapter (9).

S 024-009
(14) Remove the actuator (1).

TASK 28-22-12-404-010
3. Install the Actuator of the Engine Fuel Crossfeed Valve (Fig. 401, Fig. 402)
A. Parts

AMM			AIPC		
FIG	ITEM	NOMENCLATURE	SUBJECT	FIG	ITEM
401	1	Actuator	28-22-02	01	73, 75, 96, 98, 100E
			28-22-02	36	415, 660

B. References
(1) AMM 20-30-88/201, Airplane Structure Cleaning Solvents (Series 88)
(2) AMM 20-30-92/201, Airplane Structure Cleaning Solvents (Series 92)
(3) AMM 24-22-00/201, Electrical Power Control
(4) AMM 28-11-00/701, Fuel Tanks
(5) AMM 32-00-15/201, Landing Gear Door Locks
(6) AMM 51-21-04/701, Alodine Coating
(7) SWPM 20-20-00, Electrical Bonding and Grounds
C. Equipment
(1) Brush - Soft Bristle
(2) BAC5000 - Sealant Removal Tool
D. Consumable Materials
(1) C00064 Coating - Chemical Conversion Coating for Aluminum or Aluminum Alloys, MIL-C-5541 (MIL-C-81706) - Alodine 600 and 1200
(2) G00034 Cotton Wiper, Process Cleaning Absorbent Wiper (cheesecloth, gauze) BMS15-5
(3) C00307 BMS 10-20, Type II Class A - Finish, Corrosion Resistant
(4) G50021 - Scotch-Brite 96W pad
(5) Sealant, BMS 5-45 Class C

BOEING PROPRIETARY - Copyright (C) - Unpublished Work - See title page for details.

(6) Sealant, BMS 5-95 Class B or C
(7) Sealant, BMS 5-142
(8) B01008 Solvent - Series 88
(9) B01012 Solvent - Series 92

E. Access
(1) Location Zones
133 Wing Center Section (Left)
531 Center Auxiliary Tank (Left)

F. AIRPLANES WITHOUT ACTUATOR MA20A2027 OR MA30A1001;
Install the Actuator of the Engine Fuel Crossfeed Valve (Fig. 401)

S 864-023
(1) Move the manual override handle (10) on the actuator (1) to the CLOSED position.

S 824-011
(2) Align the splines on the shaft of the actuator (1) with the adapter (9).

S 424-024
(3) Put the actuator (1) in its position against the adapter (9).

S 434-012
(4) Install the mounting bolts (2) that attach the actuator (1) to the adapter (9).

S 434-025
(5) Install the lockwire on the mounting bolts (2).

S 434-013
(6) Install the screw (5), washer (6), and nut (7) to attach the bonding jumper (4) to the actuator (1).

S 434-026
(7) Install the electrical connector (8) on the actuator (1).

S 224-027
(8) Make sure the bonding resistance between the actuator (1) and the airplane structure is not more than 0.005 ohms (SWPM 20-20-00).

S 864-261
(9) AIRPLANES WITH A SINGLE ENGINE FUEL CROSSFEED VALVE (PRE-SB 28-34);
Remove the DO-NOT-CLOSE tag, and close this circuit breaker on the overhead circuit breaker panel, P11:
(a) 11D36, FUEL CROSSFEED VALVE

BOEING PROPRIETARY - Copyright (C) - Unpublished Work - See title page for details.

S 864-262

(10) AIRPLANES WITH FORWARD AND AFT ENGINE FUEL CROSSFEED VALVES (POST-SB 28-34 OR PRR12221);
Remove the DO-NOT-CLOSE tags, and close these circuit breakers on the overhead circuit breaker panel, P11:
(a) 11M20, FWD FUEL CROSSFEED VALVE
(b) 11M21, AFT FUEL CROSSFEED VALVE
(c) 11D36, CROSSFEED IND

S 864-015

(11) Supply electrical power (AMM 24-22-00/201).

G. AIRPLANES WITH ACTUATOR MA20A2027 OR MA30A1001;
Install the Engine Fuel Crossfeed Valve Actuator (Fig. 401, Fig. 402)

S 144-283

(1) Remove the old sealant and clean the actuator (1), index plate, and fasteners (if reused).
(a) Use the sealant removal tool and sealant removal tool handle (or equivalent) to remove old sealant from the actuator (1) and index plate.

WARNING: DO NOT GET SOLVENTS IN YOUR MOUTH, YOUR EYES, OR ON YOUR SKIN. DO NOT BREATHE THE FUMES FROM SOLVENTS. SOLVENTS ARE DANGEROUS MATERIALS. SOLVENTS CAN BE FLAMMABLE. OBEY THE MATERIAL SAFETY DATA SHEETS (MSDS) FOR SOLVENTS. OBEY LOCAL REGULATIONS FOR THE CORRECT PROCEDURES TO USE OR DISCARD SOLVENTS. SOLVENTS CAN CAUSE INJURIES TO PERSONNEL AND DAMAGE TO EQUIPMENT.

(b) To remove the remaining sealant, grease, oil, dirt, and other contamination from the components, use one of these items soaked with Series 92 solvent (AMM 20-30-92/201).
1) soft bristle brush
2) cotton wiper
3) Scotch-Brite 96W pad

S 424-284

(2) Do these steps to prepare the actuator (1) and the index plate for a sealed electrical faying surface bond (SWPM 20-20-00):

WARNING: DO NOT GET SOLVENTS IN YOUR MOUTH, YOUR EYES, OR ON YOUR SKIN. DO NOT BREATHE THE FUMES FROM SOLVENTS. SOLVENTS ARE DANGEROUS MATERIALS. SOLVENTS CAN BE FLAMMABLE. OBEY THE MATERIAL SAFETY DATA SHEETS (MSDS) FOR SOLVENTS. OBEY LOCAL REGULATIONS FOR THE CORRECT PROCEDURES TO USE OR DISCARD SOLVENTS. SOLVENTS CAN CAUSE INJURIES TO PERSONNEL AND DAMAGE TO EQUIPMENT.

(a) Final clean the contact surfaces with a cotton wiper soaked with Series 88 solvent (AMM 20-30-88/201).

BOEING PROPRIETARY - Copyright (C) - Unpublished Work - See title page for details.

(b) Rub dry with a clean, dry cotton wiper.
(c) Continue to clean and dry the surface until the dry cotton wiper stays clean.
(d) Apply a thin continuous layer of sealant to the actuator contact areas (four locations).

NOTE: CDCCL - Refer to the task: Airworthiness Limitation Precautions (AMM 28-00-00/201), for important information on Critical Design Configuration Control Limitations (CDCCLs).

NOTE: This is applicable to Airworthiness Limitation 28-AWL-23.

1) Use BMS 5-45 Class C or BMS 5-95 Class B or C sealant for the faying surface seal.
2) Make sure the sealant layer is approximately 0.005 inch (0.127 mm) thick.

(e) Apply sealant to the shank and the threads of the mounting bolts (2).

NOTE: CDCCL - Refer to the task: Airworthiness Limitation Precautions (AMM 28-00-00/201), for important information on Critical Design Configuration Control Limitations (CDCCLs).

NOTE: This is applicable to Airworthiness Limitation 28-AWL-23.

1) Use BMS 5-45 Class C or BMS 5-95 Class B or C sealant for the wet installation of the mounting bolts (2).

NOTE: Use the same sealant on the mounting bolts (2) that was used for the faying surface seal.

2) Make sure the sealant applied to the fasteners is approximately 0.060 inch (1.524 mm) thick.

S 424-285

(3) Do these steps to install the actuator (1) to the index plate.
(a) Make sure the manual override handle (10) is in the CLOSED position.
(b) Align the splined shaft with the adapter shaft.
(c) Make sure the two spaces for teeth on the adapter shaft align with the splined shaft.
(d) Put the splined shaft into the actuator shaft.

NOTE: The contact areas of the actuator automatically align with the mounting points on the index plate.

BOEING PROPRIETARY - Copyright (C) - Unpublished Work - See title page for details.

(e) Install the actuator mounting bolts (2) and washers that attach the actuator (1) to the index plate.

NOTE: Lockwire is not necessary for the actuator mounting bolts.

(f) Tighten the mounting bolts (2) to 20 in-lb (2.3 Nm).
(g) Make sure the sealant is continuously squeezed out along the edges of the contact surfaces.
(h) If there are gaps, bubbles or voids in the sealant squeeze out, then disassemble and apply more sealant.
(i) Shape the squeezed out sealant into a fillet seal.
(j) As an option, remove the extra squeezed out sealant.

NOTE: Make sure the sealant that remains is flush with the mating part edges.

S 764-286

(4) Measure the electrical bonding resistance between the upper housing of the actuator (at the bare metal bonding jumper installation location) and the rear spar (SWPM 20-20-00).
(a) Do this measurement with the bonding jumper (4) and the electrical connector (8) disconnected.
(b) Make sure the bonding jumper (4) does not touch the actuator (1) during the bonding measurement.
(c) Make sure the bonding resistance is 0.0025 ohm (2.5 milliohms) or less.

NOTE: CDCCL - Refer to the task: Airworthiness Limitation Precautions (AMM 28-00-00/201), for important information on Critical Design Configuration Control Limitations (CDCCLs).

NOTE: This is applicable to Airworthiness Limitation 28-AWL-23.

BOEING PROPRIETARY - Copyright (C) - Unpublished Work - See title page for details.

S 764-287

(5) Measure the electrical bonding resistance between the loose end of the bonding jumper (4) and the rear spar (SWPM 20-20-00).

(a) Make sure the bonding resistance is 0.0015 ohm (1.5 milliohms) or less.

NOTE: CDCCL - Refer to the task: Airworthiness Limitation Precautions (AMM 28-00-00/201), for important information on Critical Design Configuration Control Limitations (CDCCLs).

NOTE: This is applicable to Airworthiness Limitation 28-AWL-23.

S 424-288

(6) Do these steps to install the bonding jumper (4) to the actuator (1):

(a) Final clean the contact surfaces with a cotton wiper soaked with Series 88 solvent (AMM 20-30-88/201).

1) Rub dry with a clean, dry cotton wiper.

2) Continue to clean and dry the surface until the dry cotton wiper stays clean.

(b) Apply a thin continuous layer of sealant to both surfaces of the bonding jumper (4) and the washers.

1) Use BMS 5-142 sealant for the faying surface seal.

2) Make sure the sealant layer is approximately 0.005 inch (0.127 mm) thick.

(c) Install the screw, washers, and nut to attach the bonding jumper (4) to the actuator (1).

(d) AIRPLANES WITHOUT ACTUATOR MA30A1001;
Tighten the screw to 20 in-lb (2.3 Nm).

(e) AIRPLANES WITH ACTUATOR MA30A1001;
Tighten the screw to 35 in-lb (4.0 Nm).

(f) Measure the electrical bonding resistance between the upper housing of the actuator (1) and the attached bonding jumper (4) terminal (SWPM 20-20-00).

1) Do not touch the screw when you make the bonding measurement.

2) Make sure the bonding resistance is 0.001 ohm (1 milliohm) or less.

NOTE: CDCCL - Refer to the task: Airworthiness Limitation Precautions (AMM 28-00-00/201), for important information on Critical Design Configuration Control Limitations (CDCCLs).

NOTE: This is applicable to Airworthiness Limitation 28-AWL-23.

BOEING PROPRIETARY - Copyright (C) - Unpublished Work - See title page for details.

(g) Apply a cap seal of BMS 5-142 sealant over the terminal of the bonding jumper (4) and screw.

S 374-289

(7) Do this task to apply protective finishes to the bare areas of the rear spar: Apply the Corrosion Resistant Finish (Topcoat) (AMM 28-11-00/701).

NOTE: Re-apply the protective finishes to the rear spar where the electrical bonding probes removed the finishes.

(a) These are the protective finishes:
1) Alodine 600 coating
2) BMS 10-20 coating

S 914-290

(8) Do this task to apply Alodine 1200 coating to any bare areas of the actuator (1): Apply the Alodine Coating (AMM 51-21-04/701).

NOTE: Re-apply the protective coating to the actuator (1) where the electrical bonding probe removed the finish and any bare metal areas around the bonding jumper installation that are not covered with sealant.

S 434-291

(9) Install the electrical connector (8) on the actuator (1).

S 864-268

(10) AIRPLANES WITH A SINGLE ENGINE FUEL CROSSFEED VALVE (PRE-SB 28-34);
Remove the DO-NOT-CLOSE tag, and close this circuit breaker on the overhead circuit breaker panel, P11:
(a) 11D36, FUEL CROSSFEED VALVE

S 864-270

(11) AIRPLANES WITH FORWARD AND AFT ENGINE FUEL CROSSFEED VALVES (POST-SB 28-34 OR PRR12221);
Remove the DO-NOT-CLOSE tags, and close these circuit breakers on the overhead circuit breaker panel, P11:
(a) 11M20, FWD FUEL CROSSFEED VALVE
(b) 11M21, AFT FUEL CROSSFEED VALVE
(c) 11D36, CROSSFEED IND

S 864-273

(12) Supply electrical power (AMM 24-22-00/201).

BOEING PROPRIETARY - Copyright (C) - Unpublished Work - See title page for details.

H. Operational Test of the Engine Fuel Crossfeed Valve Actuator

S 714-028

(1) Do the steps that follow to do a test of the actuator (1) operation:
   (a) Push the applicable FUEL CROSSFEED switch-light on the overhead panel, P5, in the open position (flowbar is shown).
   (b) Make sure the VALVE light comes on, then goes off.
   (c) Make sure the manual override handle (10) on the actuator (1) moves to the OPEN position.
   (d) Put the applicable FUEL CROSSFEED switch-light on the P5 panel to the closed position (flowbar not shown).
   (e) Make sure the VALVE light comes on, then goes off.
   (f) Make sure the manual override handle (10) on the actuator (1) moves to the CLOSED position.

S 864-016

(2) Remove the DO-NOT-CLOSE tags and close these circuit breakers on the P11 panel:
   (a) 11H15, FLT CONT SHUTOFF WING L
   (b) 11H16, FLT CONT SHUTOFF WING C
   (c) 11H26, FLT CONT SHUTOFF WING R

I. Put the Airplane Back to Its Usual Condition

S 864-029

(1) Remove the DO-NOT-OPERATE tags and move the FLT CONTROL SHUTOFF WING L, R, and C switches on the P61 panel to the ON position.

S 214-030

(2) Make sure the amber switch-position legend lights go off.

S 864-017

(3) Remove the DO-NOT-OPERATE tags from the left and right airplane control wheels.

S 094-018

WARNING: USE THE PROCEDURE IN AMM 32-00-15/201 TO REMOVE THE DOOR LOCKS. THE DOORS OPEN AND CLOSE QUICKLY AND CAN CAUSE INJURY TO PERSONS OR DAMAGE TO EQUIPMENT.

(4) Remove the door locks from the landing gear doors and close the doors (AMM 32-00-15/201).

S 864-019

(5) Remove electrical power if it is not necessary (AMM 24-22-00/201).

BOEING PROPRIETARY - Copyright (C) - Unpublished Work - See title page for details.

ENGINE FUEL CROSSFEED VALVE ACTUATOR - INSPECTION/CHECK

1. General
   A. This procedure contains a functional check of the bonding resistance between the structure and the engine fuel crossfeed valve actuator(s).

TASK 28-22-12-706-064

2. Engine Fuel Crossfeed Valve Actuator - Bonding Resistance Check (Fig. 601)
   A. Equipment
      (1) Bonding Meter - Use one of these:
         (a) Bonding Meter - T477W
             Avtron Manufacturing Co.
             Cleveland, OH
         (b) Bonding Meter - Model M1
             (Serial Number A000012 and subsequent)
             BCD Electronics Ltd.
             Vancouver, Canada
   B. Consumable Materials
      (1) G00034 Cotton Wiper, Process Cleaning Absorbent Wiper (Cheesecloth, gauze) BMS 15-5
      (2) Sealant, BMS 5-142
      (3) B01008 Solvent - Series 88
   C. References
      (1) AMM 20-30-88/201, Airplane Structure Cleaning Solvents (Series 88)
      (2) AMM 32-00-15/201, Landing Gear Door Locks
      (3) AMM 32-00-20/201, Landing Gear Downlocks
      (4) SWPM 20-20-00, Electrical Bonding and Grounds
   D. Access
      (1) Location Zones
            133 Wing Center Section (Left)
            531 Center Auxiliary Tank (Left)

   E. Prepare for the Procedure

      S 866-066
      (1) AIRPLANES WITH A SINGLE ENGINE FUEL CROSSFEED VALVE
          Open this circuit breaker on the overhead circuit breaker panel, P11, and attach a DO-NOT-CLOSE tag:
          (a) 11D36, FUEL CROSSFEED VALVE

      S 866-067
      (2) AIRPLANES WITH FORWARD AND AFT ENGINE FUEL CROSSFEED VALVES
          Open these circuit breakers on the overhead circuit breaker panel, P11, and attach DO-NOT-CLOSE tags:
          (a) 11M20, FWD FUEL CROSSFEED VALVE

BOEING PROPRIETARY - Copyright (C) - Unpublished Work - See title page for details.

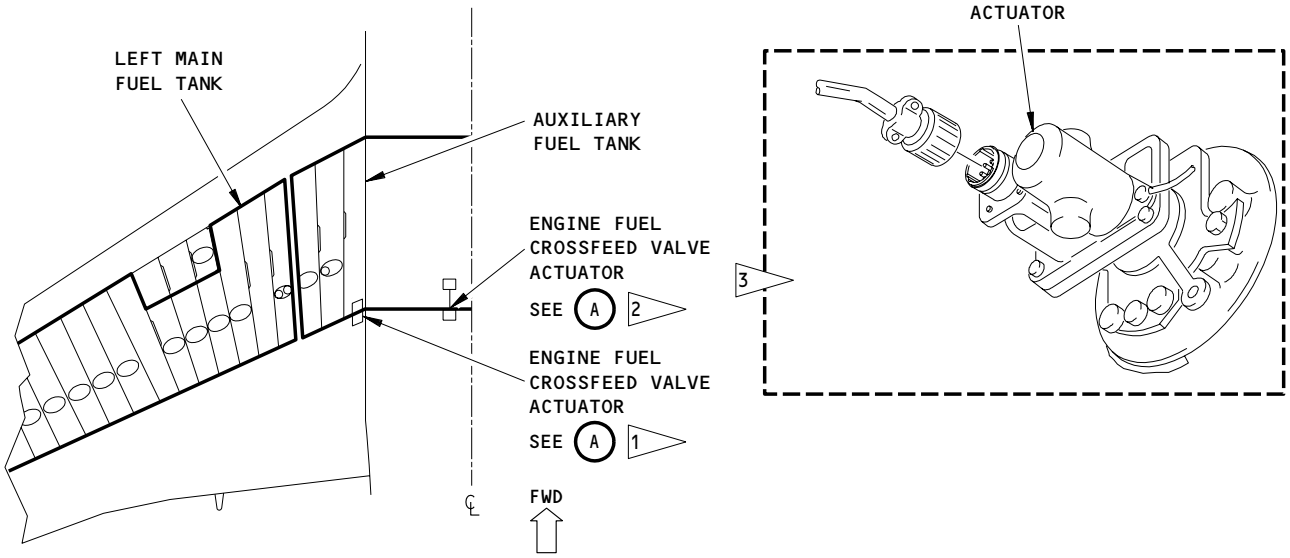

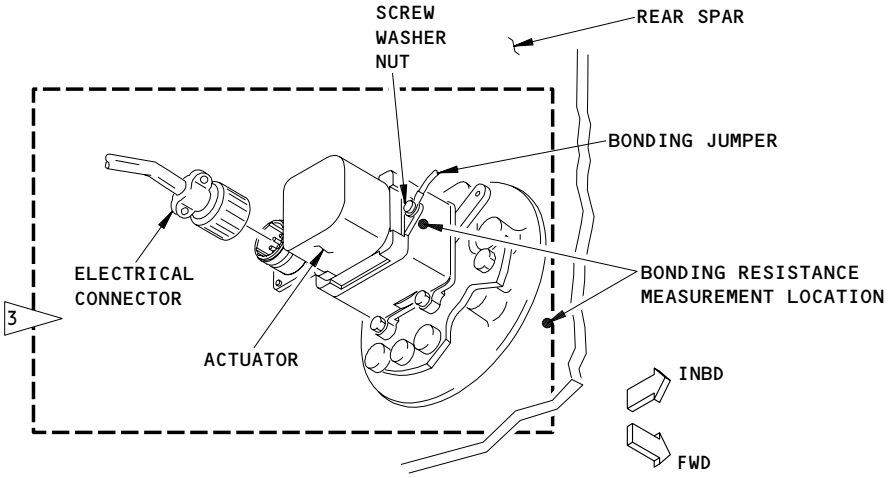

ENGINE FUEL CROSSFEED VALVE ACTUATOR
(EXAMPLE)

A

1 AIRPLANES WITH ENGINE FUEL CROSSFEED VALVE ACTUATOR IN LEFT AUXILIARY FUEL TANK
2 AIRPLANES WITH ENGINE FUEL CROSSFEED VALVE ACTUATOR IN CENTER AUXILIARY FUEL TANK
3 ALTERNATE

Engine Fuel Crossfeed Valve Actuator Inspection
Figure 601 (Sheet 1)

BOEING PROPRIETARY - Copyright (C) - Unpublished Work - See title page for details.

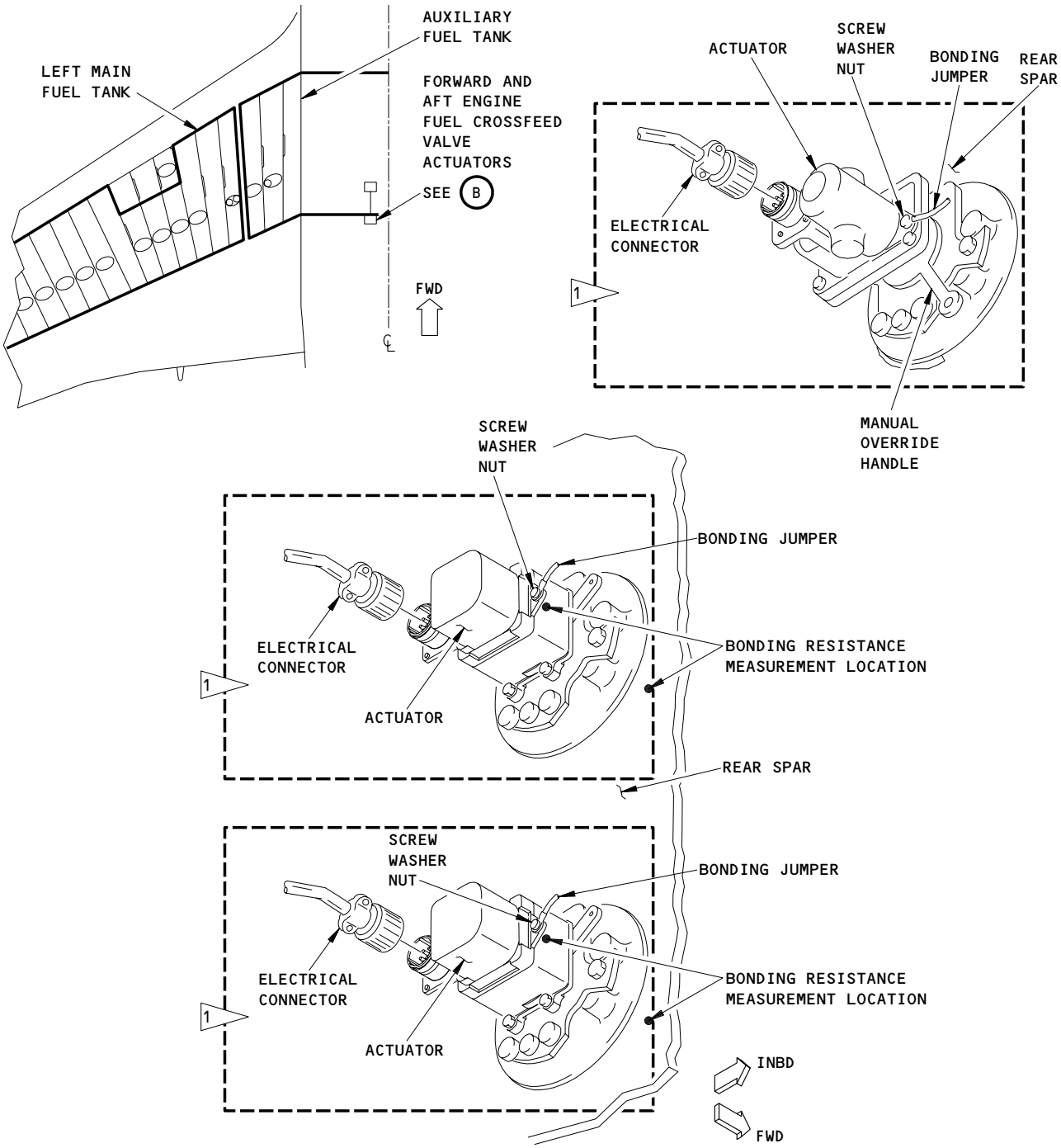

FORWARD AND AFT ENGINE FUEL CROSSFEED VALVE ACTUATORS
(EXAMPLE)
B

1 ALTERNATE

Engine Fuel Crossfeed Valve Actuators Inspection
Figure 601 (Sheet 2)

EFFECTIVITY
AIRPLANES WITH FWD AND AFT CROSSFEED VALVES (POST-SB 28-34 OR PRR12221) AND WITHOUT ACTUATOR MA20A2027 OR MA30A1001

1423694

BOEING PROPRIETARY - Copyright (C) - Unpublished Work - See title page for details.

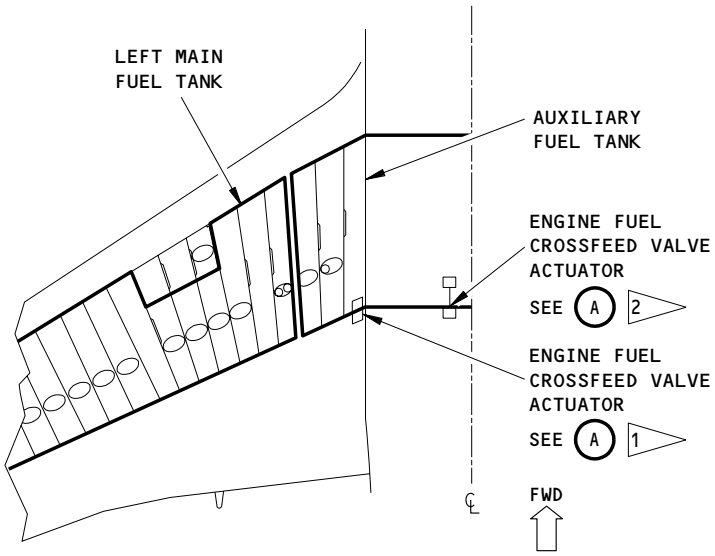

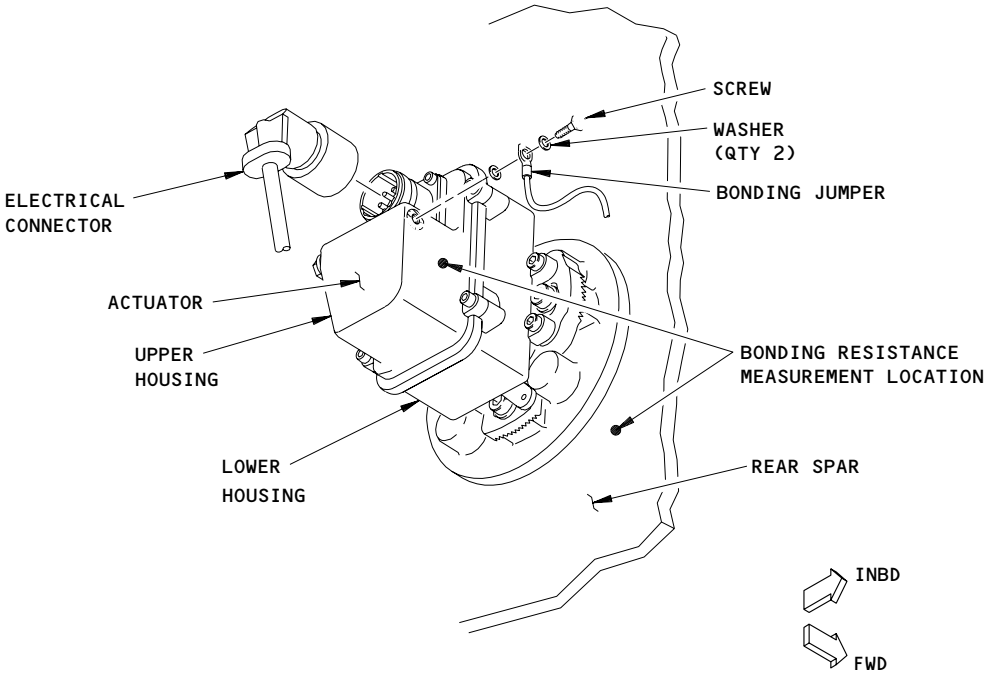

ENGINE FUEL CROSSFEED VALVE ACTUATOR
(EXAMPLE)
A

1 AIRPLANES WITH ENGINE FUEL CROSSFEED VALVE ACTUATOR IN LEFT AUXILIARY FUEL TANK
2 AIRPLANES WITH ENGINE FUEL CROSSFEED VALVE ACTUATOR IN CENTER AUXILIARY FUEL TANK

Engine Fuel Crossfeed Valve Actuator Inspection
Figure 601A (Sheet 1)

EFFECTIVITY
AIRPLANES WITH A SINGLE ENGINE FUEL CROSSFEED VALVE (PRE-SB 28-34) AND WITH ACTUATOR MA20A2027 OR MA30A1001

BOEING PROPRIETARY - Copyright (C) - Unpublished Work - See title page for details.

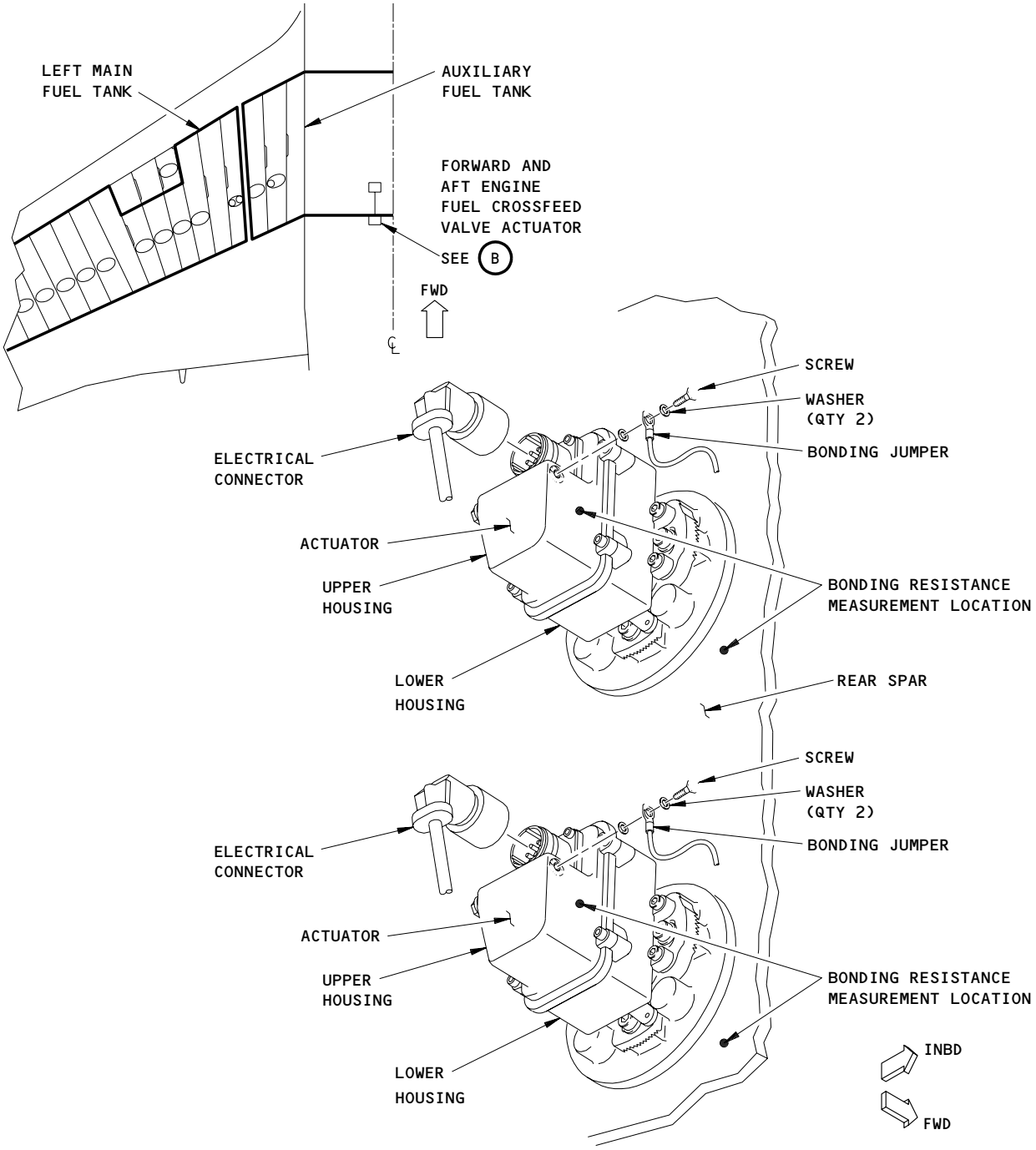

FORWARD AND AFT ENGINE FUEL CROSSFEED VALVE ACTUATOR
(EXAMPLE)

B

Engine Fuel Crossfeed Valve Actuator Inspection
Figure 601A (Sheet 2)

EFFECTIVITY
AIRPLANES WITH FWD AND AFT CROSSFEED VALVES (POST-SB 28-34 OR PRR12221) AND WITH ACTUATOR MA20A2027 OR MA30A1001

1423655

BOEING PROPRIETARY - Copyright (C) - Unpublished Work - See title page for details.

(b) 11M21, AFT FUEL CROSSFEED VALVE
(c) 11D36, CROSSFEED IND

S 486-059

WARNING: MAKE SURE THAT THE DOWNLOCKS ARE INSTALLED IN ALL OF THE LANDING GEAR. WITHOUT THE DOWNLOCKS, THE LANDING GEAR CAN RETRACT AND CAUSE INJURIES TO PERSONS AND DAMAGE TO EQUIPMENT.

(3) Make sure the downlocks are installed in the nose and main landing gear (AMM 32-00-20/201).

S 486-060

WARNING: OBEY THE INSTALLATION PROCEDURE FOR THE DOOR LOCKS. THE DOORS OPEN AND CLOSE QUICKLY. THE MOVEMENT OF THE DOORS CAN CAUSE INJURIES TO PERSONS AND DAMAGE TO EQUIPMENT.

(4) Open the doors for the landing gear and install the door locks (AMM 32-00-15/201).

S 026-069
(5) Disconnect the electrical connector from the actuator.

F. AIRPLANES WITHOUT ACTUATOR MA20A2027 OR MA30A1001; Bonding Resistance Check

S 026-070
(1) Disconnect the bonding jumper from the actuator.

S 766-063
(2) Measure the electrical bonding resistance between the actuator and the structure (SWPM 20-20-00).
(a) Make sure the bonding resistance is 0.005 ohm (5 milliohms) or less.

S 426-071
(3) Install the screw, washers, and nut to attach the bonding jumper to the actuator.

G. AIRPLANES WITH ACTUATOR MA20A2027 OR MA30A1001; Bonding Resistance Check

S 026-080
(1) Disconnect the bonding jumper from the actuator.

BOEING PROPRIETARY - Copyright (C) - Unpublished Work - See title page for details.

S 766-079

(2) Measure the electrical bonding resistance between the actuator and the structure (SWPM 20-20-00).
   (a) Make sure the bonding resistance is 0.005 ohm (5 milliohms) or less.

S 426-081

(3) Do these steps to install the bonding jumper to the actuator:
   (a) Clean the contact surfaces with a cotton wiper soaked with Series 88 solvent (AMM 20-30-88/201).
      1) Clean and dry the surface until the cotton wiper stays clean.
   (b) Apply a thin continuous layer of sealant to both surfaces of the bonding jumper and the washers.
      1) Use BMS 5-142 sealant for the faying surface seal.
   (c) Install the screw, washers, and nut to attach the bonding jumper to the actuator.
   (d) AIRPLANES WITHOUT ACTUATOR MA30A1001;
   Tighten the screw to 20 in-lb (2.3 Nm).
   (e) AIRPLANES WITH ACTUATOR MA30A1001;
   Tighten the screw to 35 in-lb (4.0 Nm).
   (f) Measure the electrical bonding resistance between the upper housing of the actuator and the attached bonding jumper terminal (SWPM 20-00-00).
      1) Do not touch the screw when you make the bonding measurement.
      2) Make sure the bonding resistance is 0.001 ohm (1 milliohm) or less.

         NOTE: CDCCL - Refer to the task: Airworthiness Limitation Precautions (AMM 28-00-00/201), for important information on Critical Design Configuration Control Limitations (CDCCLs).

         NOTE: This is applicable to Airworthiness Limitation 28-AWL-23.

BOEING PROPRIETARY - Copyright (C) - Unpublished Work - See title page for details.

3) Apply a cap seal of BMS 5-142 sealant over the terminal of the bonding jumper and screw.

H. Put the Airplane Back to Its Usual Condition

S 426-076

(1) Connect the electrical connector to the actuator.

S 866-073

(2) AIRPLANES WITH A SINGLE ENGINE FUEL CROSSFEED VALVE;
Remove the DO-NOT-CLOSE tag, and close this circuit breaker on the overhead circuit breaker panel, P11:
(a) 11D36, FUEL CROSSFEED VALVE

S 866-074

(3) AIRPLANES WITH FORWARD AND AFT ENGINE FUEL CROSSFEED VALVES;
Remove the DO-NOT-CLOSE tags, and close these circuit breakers on the overhead circuit breaker panel, P11:
(a) 11M20, FWD FUEL CROSSFEED VALVE
(b) 11M21, AFT FUEL CROSSFEED VALVE
(c) 11D36, CROSSFEED IND

S 086-062

WARNING: OBEY THE REMOVAL PRECEDURE FOR THE DOOR LOCKS. THE DOORS OPEN AND CLOSE QUICKLY. THE MOVEMENT OF THE DOORS CAN CAUSE INJURIES TO PERSONS AND DAMAGE TO EQUIPMENT.

(4) Remove the door locks (AMM 32-00-15/201).

S 086-077

(5) When the maintenance and servicing of the airplane is complete, remove the downlocks from the landing gear (AMM 32-00-20/201).

BOEING PROPRIETARY - Copyright (C) - Unpublished Work - See title page for details.

SCAVENGE JET PUMP - REMOVAL/INSTALLATION

1. General
   A. Two scavenge jet pumps are installed in the center compartment of the auxiliary fuel tank. The scavenge jet pumps are the same.
   B. Access to the scavenge jet pumps is through the center auxiliary tank access door, 136KZ (AMM 28-11-02/401).
   C. It is necessary to defuel the auxiliary fuel tank before you remove the scavenge jet pumps. The removal and installation procedure is the same for the two scavenge jet pumps.
   D. This procedure contains two tasks. The first task removes the scavenge jet pump. The second task installs the scavenge jet pump.

TASK 28-22-13-004-001

2. Remove the Scavenge Jet Pump (Fig. 401)
   A. References
      (1) AMM 06-41-00/201, Fuselage Access Doors and Panels (Major Zones 100 and 200)
      (2) AMM 28-11-00/201, Fuel Tanks (Purging and Entry)
      (3) AMM 28-11-02/401, Auxiliary Tank Access Door
      (4) AMM 28-22-07/401, Fuel Line and Fittings
      (5) AMM 28-26-00/201, Defueling
   B. Access
      (1) Location Zones
          136 Enviromental Control System Bay (Right)
          194 Wing to Body - Forward Lower Half (Right)

      (2) Access Panels
          136KZ Auxiliary Tank Access Door (Center)
          194HR Pressure Relief Door (Right)

   C. Procedure

      S 654-002
      (1) Defuel the auxiliary fuel tank (AMM 28-26-00/201).

      S 654-057
      (2) For the left scavenge jet pump, defuel the left main fuel tank (AMM 28-26-00/201).

BOEING PROPRIETARY - Copyright (C) - Unpublished Work - See title page for details.

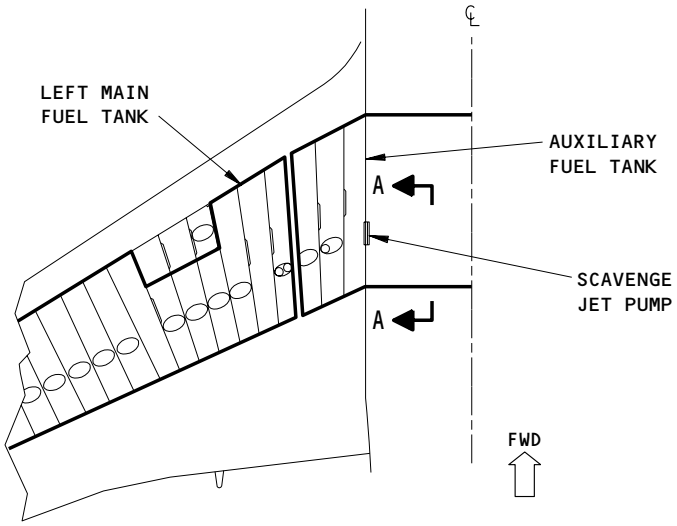

PLAN VIEW OF AIRPLANE
LEFT SIDE SHOWN
(RIGHT SIDE OPPOSITE)

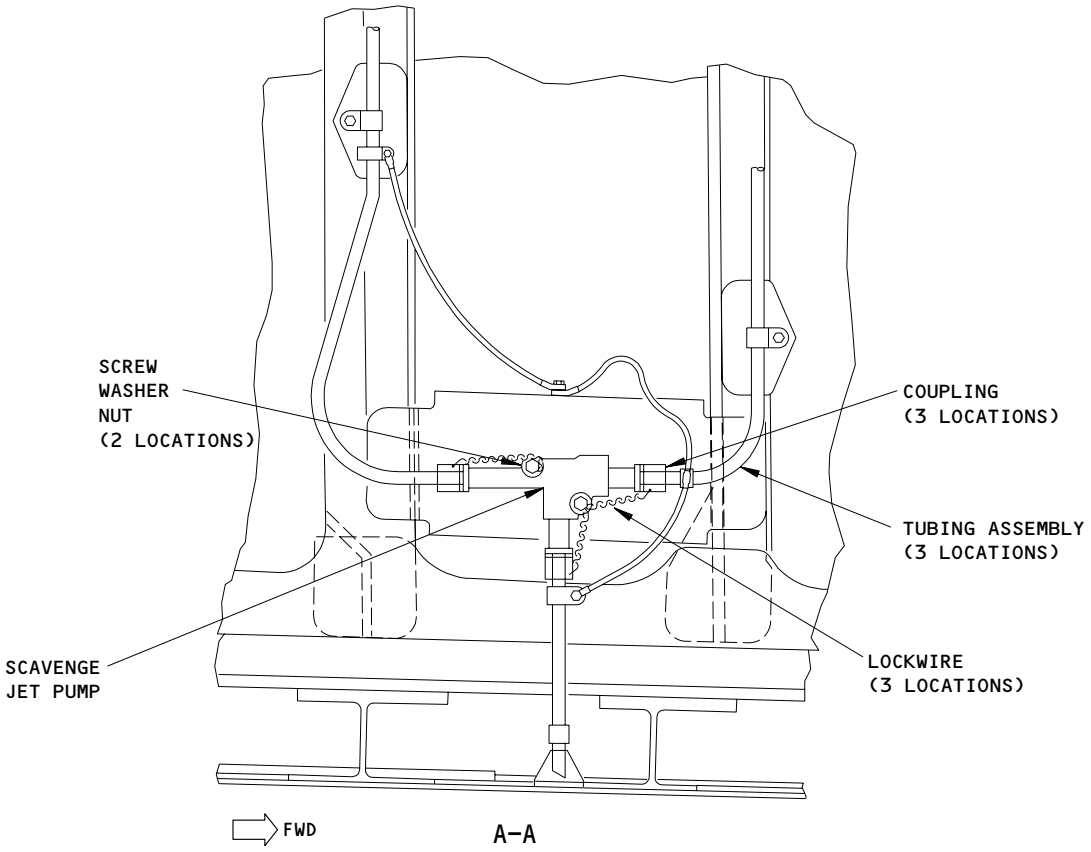

Scavenge Jet Pump Installation
Figure 401

BOEING PROPRIETARY - Copyright (C) - Unpublished Work - See title page for details.

S 654-058
(3) For the right scavenge jet pump, defuel the right main fuel tank (AMM 28-26-00/201).

S 054-012
(4) Drain and purge the auxiliary fuel tank (AMM 28-11-00/201).

S 014-013
(5) Open the pressure relief door, 194HR (AMM 06-41-00/201).

S 014-015
(6) Remove the auxiliary tank access door, 136KZ (AMM 28-11-02/401).

S 944-003

WARNING: OBEY THE FUEL TANK ENTRY PRECAUTIONS (AMM 28-11-00/201). FAILURE TO OBEY THE FUEL TANK ENTRY PRECAUTIONS COULD CAUSE INJURY TO PERSONS OR DAMAGE TO EQUIPMENT.

(7) Obey the fuel tank entry precautions (AMM 28-11-00/201).

S 014-025
(8) Remove the baffle doors as necessary to get access to the scavenge jet pump.

S 014-026
(9) Go into the center compartment of the auxiliary fuel tank and find the scavenge jet pump to be removed (AMM 28-11-00/201).

S 034-030
(10) Remove the two screws, washers and nuts from the scavenge jet pump.

S 034-004
(11) Hold the scavenge jet and disconnect the couplings for the three tubing assemblies from the scavenge jet pump (AMM 28-22-07/401).

S 024-031
(12) Remove the scavenge jet pump from the airplane.

TASK 28-22-13-404-032
3. Install the Scavenge Jet Pump (Fig. 401)
A. References
(1) AMM 06-41-00/201, Fuselage Access Doors and Panels (Major Zones 100 and 200)
(2) AMM 12-11-01/301, Fuel Tank Pressure Fueling
(3) AMM 20-10-21/601, Electrical Bonding
(4) AMM 28-11-00/201, Fuel Tanks (Purging and Entry)
(5) AMM 28-11-02/401, Auxiliary Tank Access Door

BOEING PROPRIETARY - Copyright (C) - Unpublished Work - See title page for details.

(6) AMM 28-22-07/401, Fuel Line and Fittings
(7) AIPC 28-22-07

B. Access

(1) Location Zones
136 Enviromental Control System Bay (Right)
194 Wing to Body - Forward Lower Half (Right)

(2) Access Panels
136KZ Auxiliary Tank Access Door (Center)
194HR Pressure Relief Door (Right)

C. Procedure

S 944-005

WARNING: OBEY THE FUEL TANK ENTRY PRECAUTIONS (AMM 28-11-00/201). FAILURE TO OBEY THE FUEL TANK ENTRY PRECAUTIONS COULD CAUSE INJURY TO PERSONS OR DAMAGE TO EQUIPMENT.

(1) Obey the fuel tank entry precautions (AMM 28-11-00/201).

S 214-033
(2) Make sure the surfaces that the scavenge jet pumps attach to are clean.

S 424-006
(3) Put the scavenge jet pump in position.

S 434-034
(4) Loosely connect the three tubing assemblies to the scavenge jet pump.

S 434-035
(5) Install the screw, washer, and nut (two locations) on the scavenge jet pump.

S 964-059
(6) Replace the O-rings for the three tubing connectors for the scavenge jet pump (AIPC 28-22-07).

S 434-036
(7) Connect and tighten the couplings for the three tubing connectors to the scavenge jet pump (AMM 28-22-07/401).

S 434-037
(8) Install lockwire between the three tubing connectors on the scavenge jet pump.

BOEING PROPRIETARY - Copyright (C) - Unpublished Work - See title page for details.

S 224-038
(9) Make sure the bonding resistance between the scavenge pump and the airplane structure is not more than 0.01 ohm (AMM 20-10-21/601).

S 094-039
(10) Remove the purging and ventilating equipment from the fuel tank (AMM 28-11-00/201).

S 414-043
(11) Install the baffle doors, if removed, in the center auxiliary fuel tank.

S 414-047
(12) Install the center auxiliary tank access door, 136KZ (AMM 28-11-02/401).

S 414-008
(13) Close the pressure relief door, 194HR (AMM 06-41-00/201).

S 654-051
(14) Refuel the fuel tank (AMM 12-11-01/301).

S 214-010
(15) Make sure there are no fuel leaks.

BOEING PROPRIETARY - Copyright (C) - Unpublished Work - See title page for details.

BOOST, OVERRIDE/JETTISON PUMP CONDUIT - REMOVAL/INSTALLATION

1. General
   A. This procedure contains instructions to remove and install the main tank boost pump and auxiliary tank override/jettison pump conduits.
   B. The conduits for the main tank boost pumps are found in the left and right fuel tanks. The conduits for the auxiliary tank override/jettison pumps are found in the auxiliary fuel tanks.
   C. Access to the main tank boost pumps is through the boost pump access covers. Access to the auxiliary tank override/jettison pumps is through the override/jettison pump access covers.

TASK 28-22-15-004-001

2. Boost, Override/Jettison Pump Conduit Removal (Fig. 401)
   A. References
      (1) AMM 28-11-00/201, Fuel Tanks
      (2) AMM 28-11-01/401, Main Tank Access Panels
      (3) AMM 28-11-02/401, Auxiliary Tank Access Panels
      (4) AMM 28-26-00/201, Defueling
   B. Access
      (1) Location Zones
         531 Center Auxiliary Tank (Left)
         532 Main Tank - Inboard of Rib No. 10 (Left)
         551 Rear Spar to MLG Support Beam (Left)
         631 Center Auxiliary Tank (Right)
         632 Main Tank - Inboard of Rib No. 10 (Right)
         651 Rear Spar to MLG Support Beam (Right)
      (2) Access Panels
         531AB Access Cover (Left)
         531BB Auxiliary Tank Access Door (Left)
         532AB Access Cover (Left)
         532BB Main Tank Access Door (Left)
         631AB Access Cover (Right)
         631BB Auxiliary Tank Access Door (Right)
         632AB Access Cover (Right)
         632BB Main Tank Access Door (Right)

   C. Preparation for Boost, Override/Jettison Pump Conduit Removal

      S 014-049
      (1) If you will remove a main tank boost pump conduit, do these steps:
         (a) Defuel the applicable left or right main tank (AMM 28-26-00/201).
         (b) Remove the applicable access cover 532AB or 632AB (AMM 28-11-01/401).

BOEING PROPRIETARY - Copyright (C) - Unpublished Work - See title page for details.

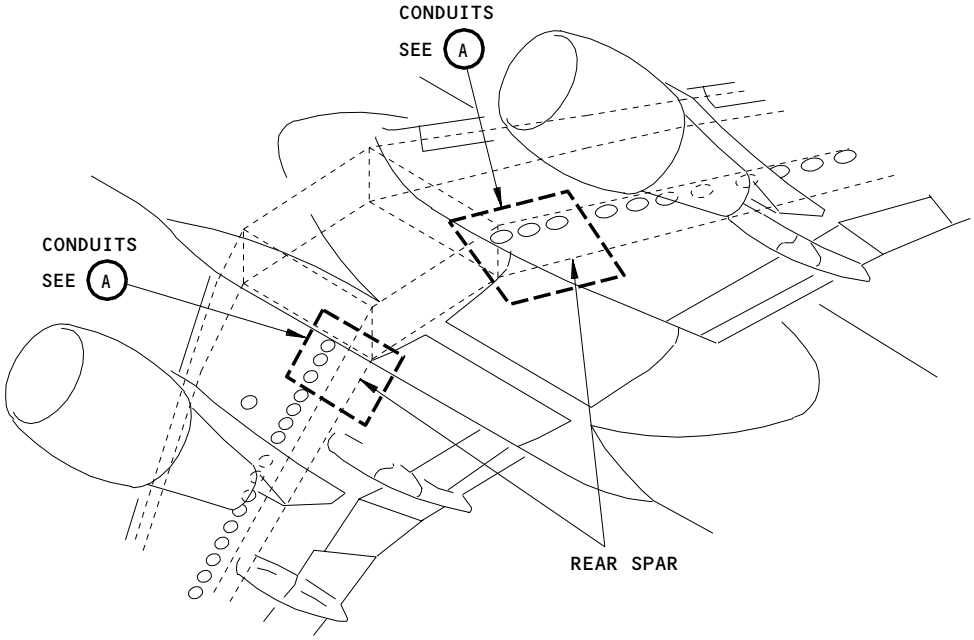

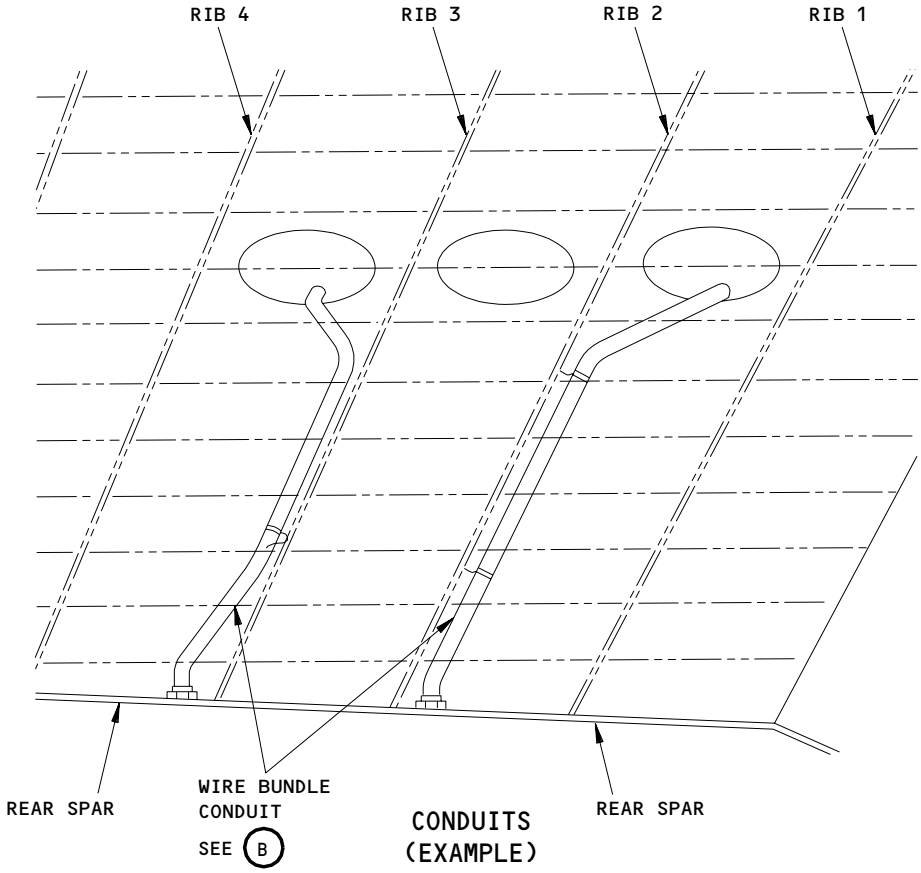

CONDUITS
(EXAMPLE)

A

Boost, Override/Jettison Pump Wire Bundle Conduit Installation
Figure 401 (Sheet 1)

BOEING PROPRIETARY - Copyright (C) - Unpublished Work - See title page for details.

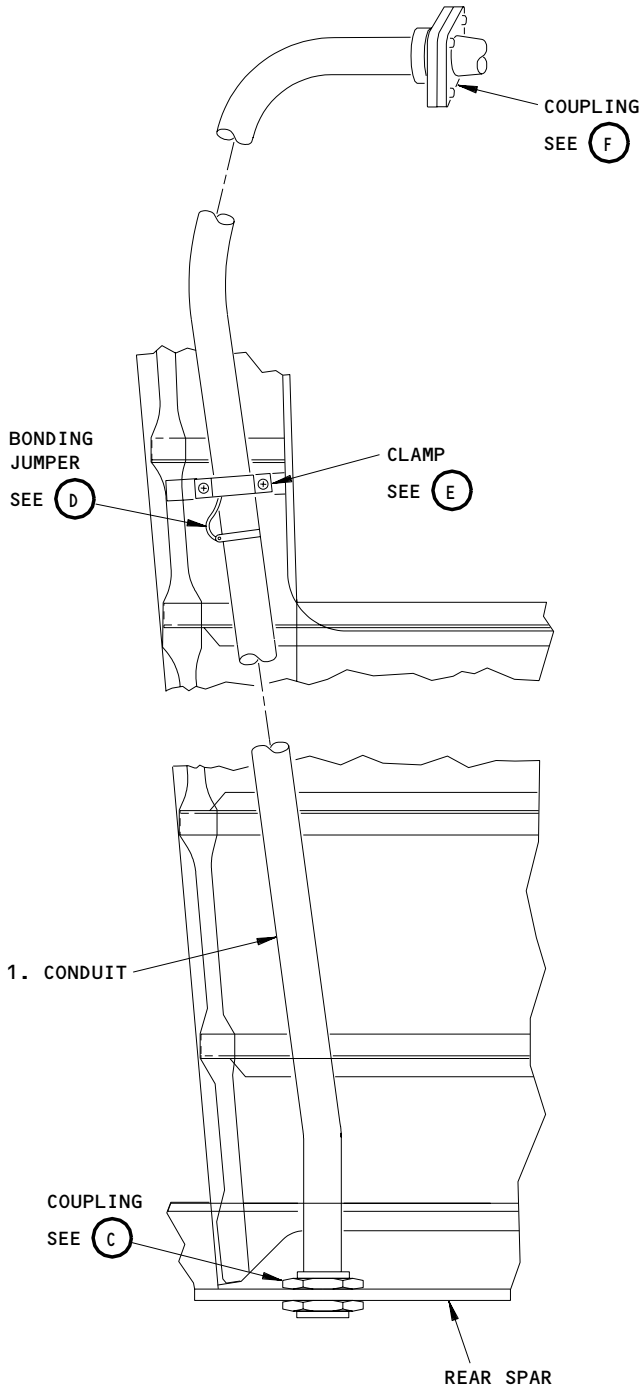

WIRE BUNDLE CONDUIT
(EXAMPLE)

B

Boost, Override/Jettison Pump Wire Bundle Conduit Installation
Figure 401 (Sheet 2)

BOEING PROPRIETARY - Copyright (C) - Unpublished Work - See title page for details.

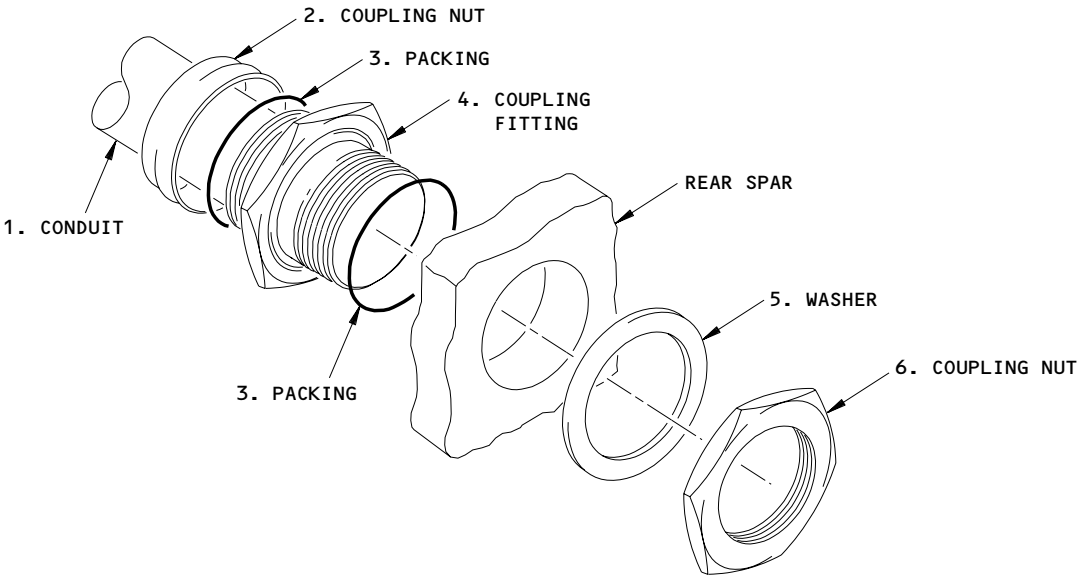

COUPLING

C

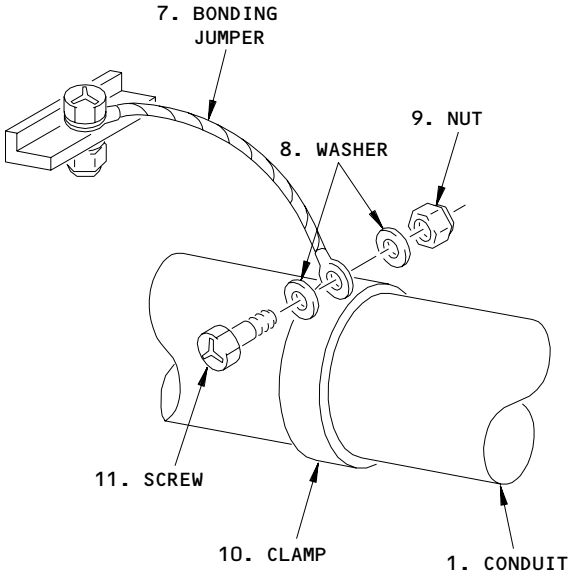

BONDING JUMPER
(EXAMPLE)

D

Boost, Override/Jettison Pump Wire Bundle Conduit Installation
Figure 401 (Sheet 3)

BOEING PROPRIETARY - Copyright (C) - Unpublished Work - See title page for details.

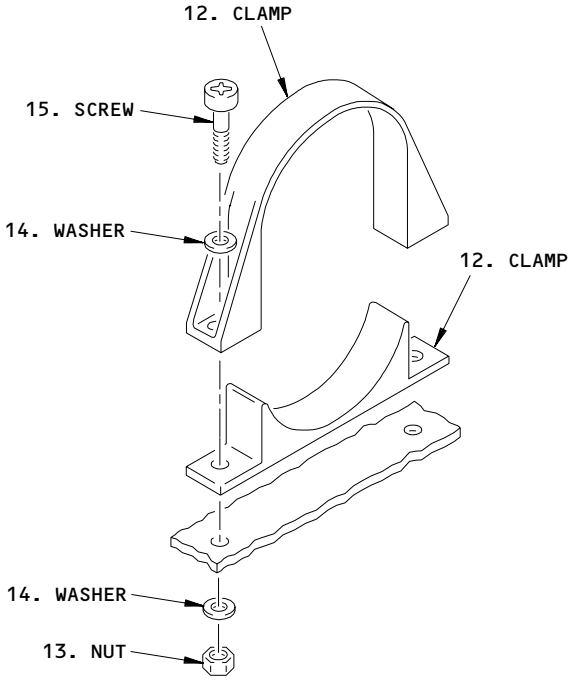

CLAMP

E

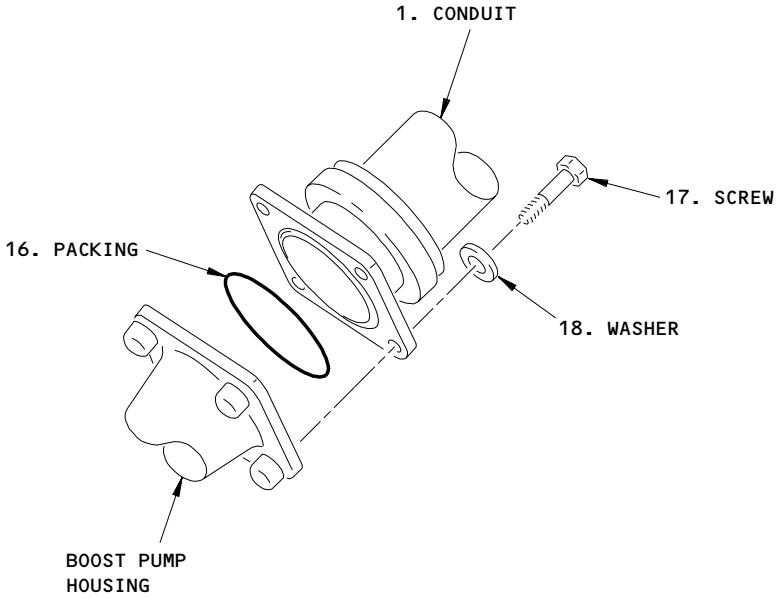

COUPLING

F

Boost, Override/Jettison Pump Wire Bundle Conduit Installation
Figure 401 (Sheet 4)

BOEING PROPRIETARY - Copyright (C) - Unpublished Work - See title page for details.

(c) Remove the applicable access door 532BB or 632BB to get access to the conduit (AMM 28-11-01/401).

S 014-050

(2) If you will remove a auxiliary tank override/jettison pump conduit, do these steps:
(a) Defuel the auxiliary tank (AMM 28-26-00/201).
(b) Remove the applicable access cover 531AB or 631AB (AMM 28-11-02/401).
(c) Remove the applicable access door 531BB or 631BB to get access to the conduit (AMM 28-11-02/401).

S 684-008

WARNING: CAREFULLY DO ALL THE SAFETY PROCEDURES TO DEFUEL AND GO INTO THE FUEL TANKS. INJURY TO PERSONS AND DAMAGE TO EQUIPMENT CAN OCCUR IF YOU DO NOT OBEY THE SAFETY PROCEDURES.

(3) Purge and prepare the fuel tank for entry (AMM 28-11-00/201).

D. Boost, Override/Jettison Pump Conduit Removal

S 864-051

(1) If you will remove a main tank boost pump conduit, make sure the applicable circuit breakers are open:
(a) Main Power Distribution Panel, P6:
1) 6G24, L FWD FUEL BOOST PUMP
2) 6G15, L AFT FUEL BOOST PUMP
3) 6G18, R FWD FUEL BOOST PUMP
4) 6G21, R AFT FUEL BOOST PUMP
(b) Overhead Circuit Breaker Panel, P11:
1) 11M16, FUEL PUMPS R FWD/L AFT
2) 11M25, FUEL PUMPS L FWD/R AFT

S 864-052

(2) If you will remove an auxiliary tank override/jettison pump conduit, make sure the applicable circuit breakers are open:
(a) Main Power Distribution Panel, P6:
1) 6F15, L FUEL OVRD PUMP
2) 6F21, R FUEL OVRD PUMP
(b) Overhead Circuit Breaker Panel, P11:
1) 11M15, L CTR FUEL PUMPS
2) 11M24, R CTR FUEL PUMPS
(c) If the fuel jettison pumps are installed, make sure the applicable circuit breakers are open:
1) Overhead Circuit Breaker Panel, P11:
a) 11M13, L FUEL JTSN CONT

BOEING PROPRIETARY - Copyright (C) - Unpublished Work - See title page for details.

b) 11M22, R FUEL JTSN CONT
2) Miscellaneous Electrical Equipment Panel, P36:
a) 36F4 or 36G7, L FUEL JETT PUMP
3) Miscellaneous Electrical Equipment Panel, P37:
a) 37F4 or 37G4, R FUEL JETT PUMP

S 864-010
(3) Disconnect the electrical connector from the applicable boost, override/jettison pump.

S 024-011
(4) Remove the wire bundle clamp at the boost, override/jettison pump.

S 024-012
(5) Remove the wire bundle clamp at the rear spar.

S 024-013
(6) Pull the wires through the conduit to the rear spar.

S 014-014
(7) Go into the applicable fuel tank to get access to the conduit (AMM 28-11-00/201).

NOTE: The conduits for the auxiliary tank override/jettison pumps are found in the left and right inboard wing sections of the auxiliary tank.

S 214-015
(8) Find the boost, override/jettison pump conduit.

S 024-016
(9) Remove the screw (11), washers (8) and nut (9) at the bonding jumper (7).

S 024-017
(10) Remove the bonding jumper (7).

S 024-018
(11) Remove the clamp (10).

S 024-019
(12) Remove the screws (15), washers (14) and nuts (13) at the mounting clamp (12).

BOEING PROPRIETARY - Copyright (C) - Unpublished Work - See title page for details.

S 024-020
(13) Remove the clamp(s) (12).

S 024-021
(14) Remove the screws (17), washers (18), and packing (16) from the coupling at the pump end of the conduit (1).

S 024-023
(15) Remove the coupling nut (6), washer (5), coupling fitting (4), coupling nut (2) and packing (3) at the spar end of the conduit.

S 014-024
(16) Remove the conduit (1).

TASK 28-22-15-404-025

3. Boost, Override/Jettison Pump Conduit Installation (Fig. 401)
   A. Equipment
      (1) Bonding Meter
      (2) Cord or stiff wire
   B. References
      (1) AMM 24-22-00/201, Electrical Power Supply
      (2) AMM 28-11-00/201, Fuel Tanks
      (3) AMM 28-11-01/401, Main Tank Access Panels
      (4) AMM 28-11-02/401, Auxiliary Tank Access Panels
      (5) AMM 28-22-00/501, Engine Fuel Feed System
      (6) AMM 28-22-15/601, Boost, Override/Jettison Pump, Wiring
      (7) SWPM 20-20-00, Standard Wiring Practices Manual
   C. Access
      (1) Location Zones
         531 Center Auxiliary Tank (Left)
         532 Main Tank - Inboard of Rib No. 10 (Left)
         551 Rear Spar to MLG Support Beam (Left)
         631 Center Auxiliary Tank (Right)
         632 Main Tank - Inboard of Rib No. 10 (Right)
         651 Rear Spar to MLG Support Beam (Right)
      (2) Access Panels
         531AB Access Cover (Left)
         531BB Auxiliary Tank Access Door (Left)
         532AB Access Cover (Left)
         532BB Main Tank Access Door (Left)
         631AB Access Cover (Right)
         631BB Auxiliary Tank Access Door (Right)
         632AB Access Cover (Right)
         632BB Main Tank Access Door (Right)

BOEING PROPRIETARY - Copyright (C) - Unpublished Work - See title page for details.

D. Procedure

S 484-026
(1) Put a cord or stiff wire in the conduit (1) to pull the wiring from the rear spar to the main tank boost pump.

S 824-027
(2) Put the conduit (1) into position and make sure the cord or stiff wire extends through the conduit at the rear spar and at the boost, override/jettison pump.

S 424-028
(3) Install the conduit (1) on the rear spar with the coupling nut (2), coupling fitting (4), new packings (3), washer (5) and coupling nut (6).

S 424-053
(4) Install the conduit (1) on the pump end with screws (17), washers (18) and new packing (16).

S 424-029
(5) Install the clamp(s) (12) onto the conduit with the screws (15), washers (14) and nuts (13).

S 164-030
(6) Clean tubing bonding surfaces and the structure at the hole where the bonding jumper is installed.

S 424-031
(7) Install the clamp (10) for the bonding jumper (7).

S 424-032
(8) Install the bonding jumper (7).

S 424-033
(9) Install the washers (8), screw (11) and nut (9).

S 764-034
(10) Do a check of the bonding resistance between tubing and structure (SWPM 20-20-00).

NOTE: Bonding resistance should not exceed 0.010 ohm.

BOEING PROPRIETARY - Copyright (C) - Unpublished Work - See title page for details.

S 764-062
(11) Do this task: Inspect the Boost, Override/Jettison Pump Wiring (AMM 28-22-15/601).

S 414-035
(12) Attach the wiring to the cord or stiff wire and pull the wiring through the conduit to the boost, override/jettison pump.

S 214-036
(13) Make sure both Teflon sleeves for the boost, override/jettison pump wiring are visible.

S 214-037
(14) Install the wire bundle clamp.
(a) Make sure the two sleeves go through the clamp.

S 414-038
(15) Install the electrical connector on the boost, override/jettison pump.

S 414-039
(16) Close and go out of the tank (AMM 28-11-00/201).

S 864-054
(17) If you installed a main tank boost pump conduit, make sure the applicable circuit breakers are closed:
(a) Main Power Distribution Panel, P6:
1) 6G24, L FWD FUEL BOOST PUMP
2) 6G15, L AFT FUEL BOOST PUMP
3) 6G18, R FWD FUEL BOOST PUMP
4) 6G21, R AFT FUEL BOOST PUMP
(b) Overhead Circuit Breaker Panel, P11:
1) 11M16, FUEL PUMPS R FWD/L AFT
2) 11M25, FUEL PUMPS L FWD/R AFT

S 864-055
(18) If you installed an auxiliary tank override/jettison pump conduit, make sure the applicable circuit breakers are closed:
(a) Main Power Distribution Panel, P6:
1) 6F15, L FUEL OVRD PUMP
2) 6F21, R FUEL OVRD PUMP

BOEING PROPRIETARY - Copyright (C) - Unpublished Work - See title page for details.

(b) Overhead Circuit Breaker Panel, P11:
1) 11M15, L CTR FUEL PUMPS
2) 11M24, R CTR FUEL PUMPS

(c) If the fuel jettison pumps are installed, make sure the applicable circuit breakers are closed:
1) Overhead Circuit Breaker Panel, P11:
a) 11M13, L FUEL JTSN CONT
b) 11M22, R FUEL JTSN CONT
2) Miscellaneous Electrical Equipment Panel, P36:
a) 36F4 or 36G7, L FUEL JETT PUMP
3) Miscellaneous Electrical Equipment Panel, P37:
a) 37F4 or 37G4, R FUEL JETT PUMP

S 414-056

(19) If you installed a main tank boost pump conduit, install access door 532BB or 632BB (AMM 28-11-01/401).

S 414-057

(20) If you installed an auxiliary tank override/jettison pump, install access door 531BB or 631BB (AMM 28-11-02/401).

S 714-040

(21) Do an operational test for the applicable boost, override/jettison pump(s) (AMM 28-22-00/501).

E. Put the Airplane Back to Its Usual Condition

S 414-058

(1) If you installed a main tank boost pump conduit, install access cover 532AB or 632AB (AMM 28-11-01/401).

S 414-059

(2) If you installed an auxiliary tank override/jettison pump conduit, install access cover 531AB or 631AB (AMM 28-11-02/401).

S 864-047

(3) Remove electrical power if it is not needed (AMM 24-22-00/201).

BOEING PROPRIETARY - Copyright (C) - Unpublished Work - See title page for details.

BOOST, OVERRIDE/JETTISON PUMP, WIRING - INSPECTION/CHECK

1. General
   A. This procedure contains instructions to do an inspection/check of the wiring and conduits for the main tank boost pumps and the auxiliary tank override/jettison pumps.
   B. The main tank boost pumps are found at the inboard end of the left and right main fuel tanks. The auxiliary tank override/jettison pumps are found at the outboard end of the left and right wing portion of the auxiliary tanks.
   C. The fuel pump wiring is installed with a double layer of teflon sleeving in the conduit. The sleeving is installed to prevent arcing between the fuel pump power wiring and the conduit caused by chafed wires.
   D. The conduits for the main tank boost pumps are found in the left and right fuel tanks. The conduits for the auxiliary tank override/jettison pumps are found in the auxiliary fuel tanks.
   E. Access to the main tank boost pumps is through the boost pump access covers. Access to the auxiliary tank override/jettison pumps is through the override/jettison pump access covers.

TASK 28-22-15-206-001

2. Inspect the Boost, Override/Jettison Pump Wiring (Fig. 601)
   A. Consumable Materials
      (1) Teflon Inner Sleeve for the main tank boost pumps - TFE-2X, Standard Wall Size #6, also (M23053/12-218C).
      (2) Teflon Outer Sleeve for the main tank boost pumps - TFE-2X, Standard Wall Size #2, also (M23053/12-223C recommended), TFE-2XTW, Thin Wall (M23053/12-327C optional).
      (3) Teflon Inner Sleeve for the override/jettison pumps - TFE-2X, Standard Wall Size #4, also (M23053/12-221C)
      (4) Teflon Outer Sleeve for the override/jettison pumps - TFE-2X, Standard Wall Size #0, also (M23053/12-225C, -226C, -227C recommended), TFE-2XTW, Thin Wall (M23053/12-329C optional).

      Port Plastics Incorporated
      1228 Andover Park East
      Tukwila, Washington 98188
      Phone: (206) 575-4994
      Fax: (206) 575-6920

   B. References
      (1) AMM 20-10-21/601, Electrical Bonding
      (2) AMM 28-11-01/401, Main Tank Access Panels
      (3) AMM 28-11-02/401, Auxiliary Tank Access Panels
      (4) AMM 28-22-00/501, Engine Fuel Feed System

BOEING PROPRIETARY - Copyright (C) - Unpublished Work - See title page for details.

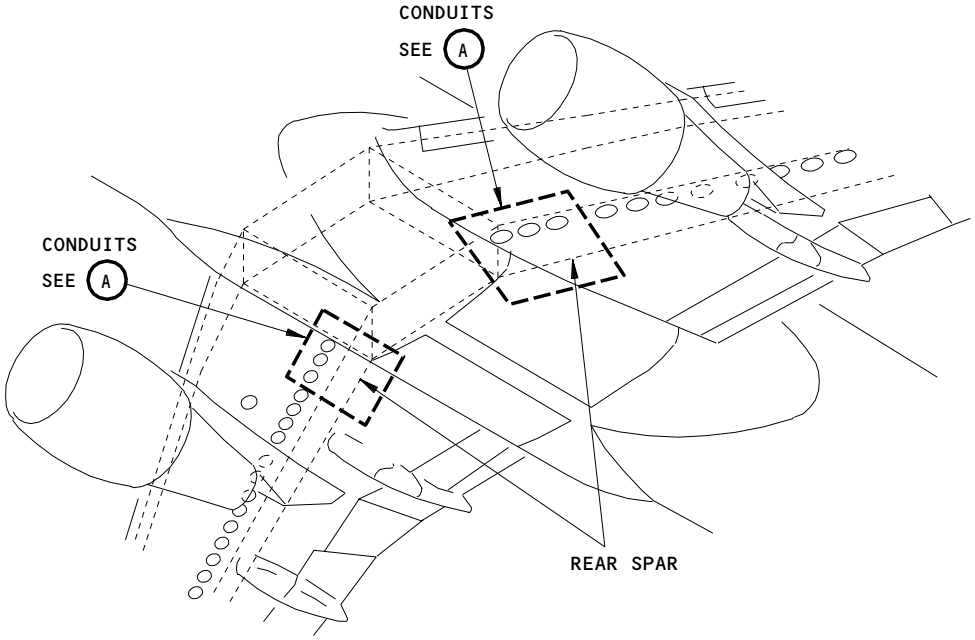

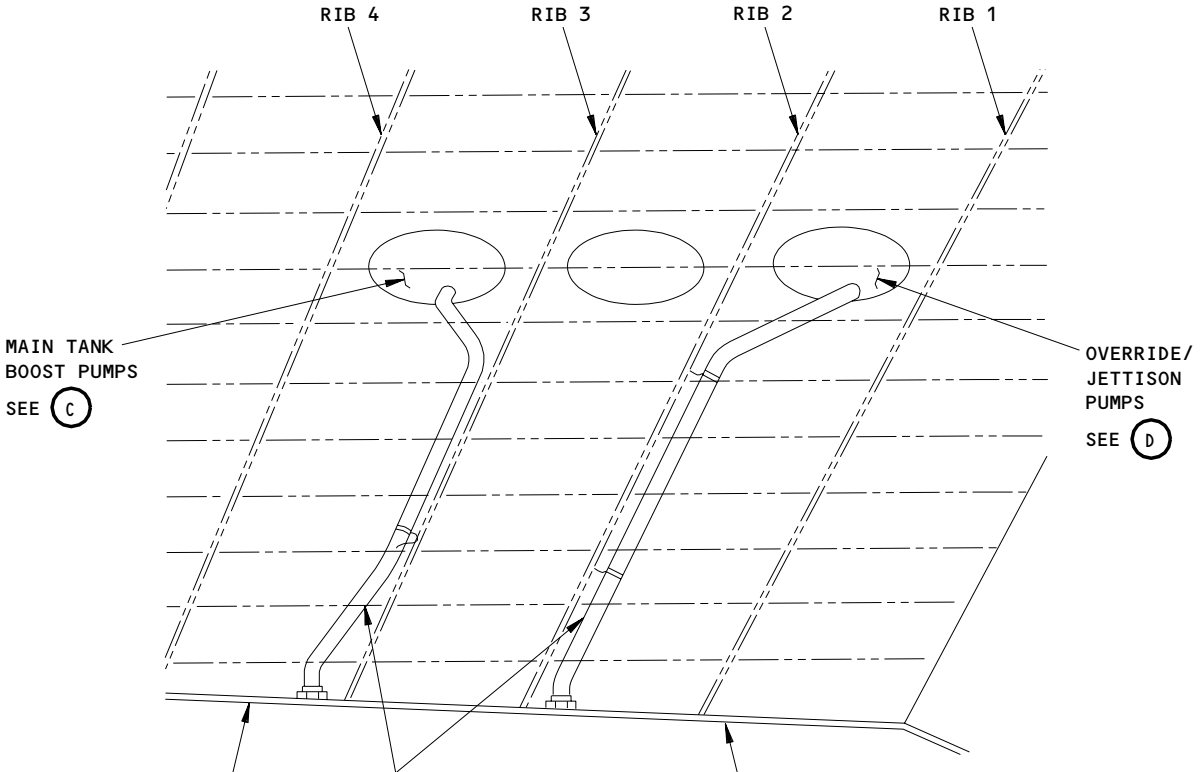

CONDUITS
(EXAMPLE)
A

Boost, Override/Jettison Pump Wire Bundle
Figure 601 (Sheet 1)

BOEING PROPRIETARY - Copyright (C) - Unpublished Work - See title page for details.

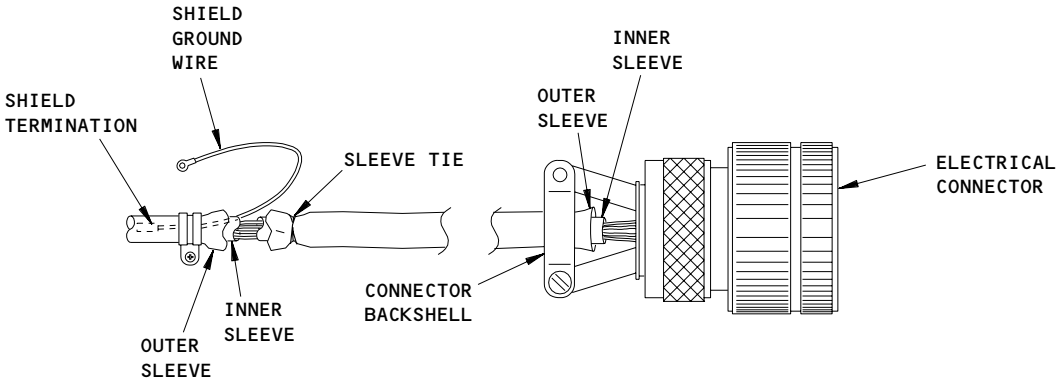

WIRE BUNDLE
(SHIELD TERMINATION BEFORE CLAMP)

B

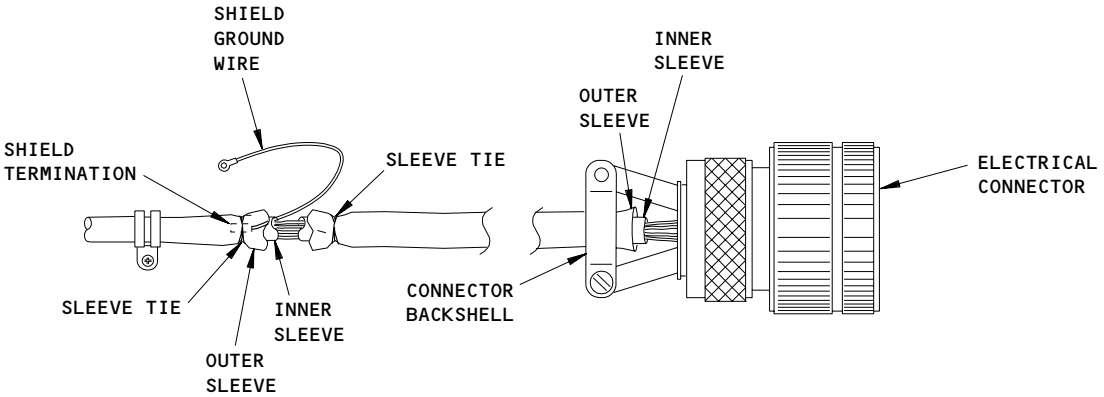

WIRE BUNDLE
(SHIELD TERMINATION AFTER CLAMP)

B

Boost, Override/Jettison Pump Wire Bundle
Figure 601 (Sheet 2)

BOEING PROPRIETARY - Copyright (C) - Unpublished Work - See title page for details.

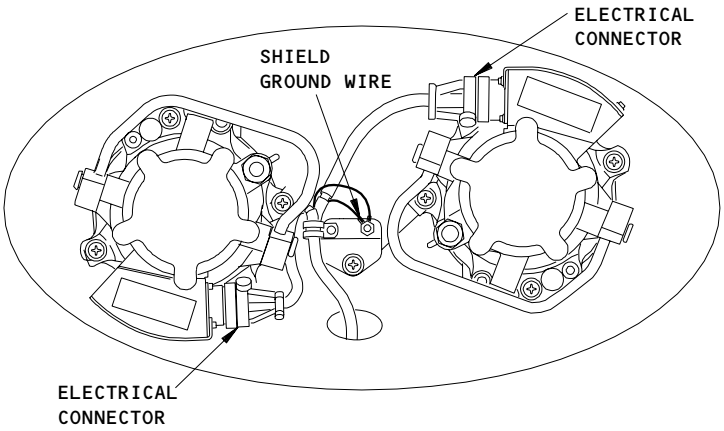

MAIN TANK BOOST PUMPS

C

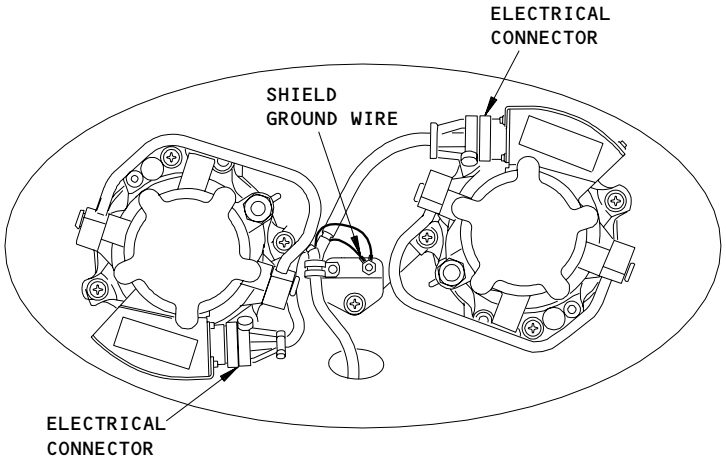

OVERRIDE/JETTISON PUMPS
(AIRPLANES WITH JETTISON PUMPS)

D

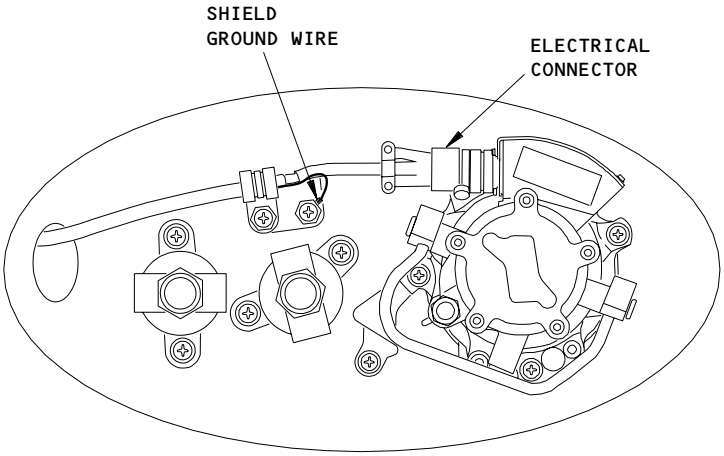

OVERRIDE PUMP
(AIRPLANES WITHOUT JETTISON PUMPS)

D

Boost, Override/Jettison Pump Wire Bundle
Figure 601 (Sheet 3)

BOEING PROPRIETARY - Copyright (C) - Unpublished Work - See title page for details.

(5) AMM 28-31-00/501, Fuel Jettison System
(6) SWPM 20-10-13
(7) SWPM 20-10-18

C. Access
(1) Location Zones
531 Center Auxiliary Tank (Left)
532 Main Tank - Inboard of Rib No. 10 (Left)
551 Rear Spar to MLG Support Beam (Left)
631 Center Auxiliary Tank (Right)
632 Main Tank - Inboard of Rib No. 10 (Right)
651 Rear Spar to MLG Support Beam (Right)
(2) Access Panels
531AB Access Cover (Left)
532AB Access Cover (Left)
631AB Access Cover (Right)
632AB Access Cover (Right)

D. Prepare for the Boost, Override/Jettison Pump Wiring Inspection

S 016-003
(1) If you will remove a main tank boost pump wire bundle, remove the applicable access cover 532AB or 632AB (AMM 28-11-01/401).

S 016-038
(2) If you will remove an auxiliary tank override/jettison pump wire bundle, remove the applicable access cover 531AB or 631AB (AMM 28-11-02/401).

S 866-039
(3) If you will remove a main tank boost pump wire bundle, make sure the applicable circuit breakers are open:
(a) Main Power Distribution Panel, P6:
1) 6G24, L FWD FUEL BOOST PUMP
2) 6G15, L AFT FUEL BOOST PUMP
3) 6G18, R FWD FUEL BOOST PUMP
4) 6G21, R AFT FUEL BOOST PUMP
(b) Overhead Circuit Breaker Panel, P11:
1) 11M16, FUEL PUMPS R FWD/L AFT
2) 11M25, FUEL PUMPS L FWD/R AFT

S 866-040
(4) If you will remove an auxiliary tank override/jettison pump wire bundle, make sure the applicable circuit breakers are open:
(a) Main Power Distribution Panel, P6:
1) 6F15, L FUEL OVRD PUMP
2) 6F21, R FUEL OVRD PUMP
(b) Overhead Circuit Breaker Panel, P11:
1) 11M15, L CTR FUEL PUMPS
2) 11M24, R CTR FUEL PUMPS

BOEING PROPRIETARY - Copyright (C) - Unpublished Work - See title page for details.

(c) If the fuel jettison pumps are installed, make sure the applicable circuit breakers are open:
1) Overhead Circuit Breaker Panel, P11:
a) 11M13, L FUEL JTSN CONT
b) 11M22, R FUEL JTSN CONT
2) Miscellaneous Electrical Equipment Panel, P36:
a) 36F4 or 36G7, L FUEL JETT PUMP
3) Miscellaneous Electrical Equipment Panel, P37:
a) 37F4 or 37G4, R FUEL JETT PUMP

S 486-062
(5) Install temporary indentification tags to the electrical connector(s) in the pump housing.

S 866-041
(6) Disconnect the electrical connector from the applicable boost, override/jettison pump.

S 216-063
(7) Make sure the inner and outer Teflon sleeves extend out the conduit and are attached under the electrical connector backshell.

NOTE: If the inner and outer Teflon sleeves are not long enough to extend through the electrical connector backshell, then the sleeve(s) are too short and must be replaced.

S 026-008
(8) Remove the wire bundle clamp inside the boost, override/jettison pump housing.

S 486-064
(9) Temporarily wrap and attach the connector(s) with a protective sheet of plastic to prevent damage to the conduit.

S 826-009
(10) Attach a cord to the wire bundle at the boost pump end.

NOTE: The cord length must be sufficient to go through the conduit from the main tank fuel boost pump to the rear spar. You will use the cord to pull the wiring back through the conduit.

BOEING PROPRIETARY - Copyright (C) - Unpublished Work - See title page for details.

S 216-065
(11) Go to the exit point of the wire bundle at the rear spar.

S 216-066
(12) Make sure the inner and outer Teflon sleeves extend out of the conduit and are attached under the wire bundle clamp at the rear spar.

NOTE: If the inner and outer Teflon sleeves are not long enough to extend through the wire bundle clamp, then the sleeves are too short and must be replaced.

S 026-010
(13) Remove the wire bundle clamp at the rear spar.

S 026-011
(14) Carefully pull the wiring through the conduit.

NOTE: It is possible for the boost pump connector to go through the conduit.

E. Inspect the Teflon Sleeves

S 216-013
(1) Make sure the wiring is covered with inner and outer Teflon sleeves, which are each one continous piece all the way through the conduit.

S 216-067
(2) Examine the Teflon sleeves for ties:

NOTE: Ties are not permitted at any other location except the ends of the sleeves. Ties attached at locations along the length of the sleeves can damage the sleeves and the wiring.

(a) Make sure ties are attached at each end of the Teflon sleeves.
(b) Make sure ties are not installed at other locations on top of the Teflon sleeves.

S 216-068
(3) Inspect the Teflon sleeves for this type of damage:
(a) Worn or chafed areas
(b) Cuts
(c) Splits
(d) Small pin size holes (possible wiring arcing damage)
(e) Melting or discoloration caused by too much heat.

BOEING PROPRIETARY - Copyright (C) - Unpublished Work - See title page for details.

S 216-069
(4) If the Teflon sleeves are not long enough (or not continuous), are damaged or have ties installed at locations other than the ends, then do these steps:
(a) Remove and discard the inner and outer Teflon sleeves.
(b) Do this procedure: Inspect the Boost, Override/Jettison Pump Wiring.
(c) After the inspection, replace the Teflon sleeves with two continuous Teflon sleeves (SWPM 20-10-18).

S 426-070
(5) If the inner and outer Teflon sleeves are satisfactory, then do this procedure: Install the Boost, Override/Jettison Pump Wiring.

NOTE: The inspection is complete.

F. Inspect the Boost, Override/Jettison Pump Wiring

S 216-071
(1) Make sure there are no ties on the wiring.

S 216-075
(2) Inspect the wiring for this type of damage:
(a) Worn or chafed wiring
(b) Physical damage
(c) Damage to the wiring under the ties (if they were present)
(d) Wire splices (no wire splices are permitted in the conduit)
(e) Discoloration from too much heat
(f) Wire damage caused by arcing.

NOTE: Arcing can show as very small blackened holes in the insulation or as deformation or pitting of the wire. Worn areas with a black material around the edge is not a sign of arcing (black material is aluminum oxide).

S 966-072
(3) If the wiring is chafed, physically damaged or there is a wire splice, then do these steps:
(a) Repair or replace the damaged wiring (SWPM 20-10-13).
(b) Replace any wiring that has a wire splice (in the conduit).
(c) After the repairs, do this procedure: Install the Boost, Override/Jettison Pump Wiring.

BOEING PROPRIETARY - Copyright (C) - Unpublished Work - See title page for details.

S 206-016

(4) If the wiring has discoloration from too much heat or electrical arcing, then do these steps:
   (a) Repair or replace all damaged wiring (SWPM 20-10-13).
   (b) Replace the inner and outer Teflon sleeves on the wiring (SWPM 20-10-18).
   (c) Do this task: Inspect the Boost, Override/Jettison Pump Conduit.

   NOTE: You must replace the pump conduit. If however, the conduit passes the inspection, then it is not necessary to replace the conduit immediately.

S 426-073

(5) If the wiring is satisfactory, then do this procedure: Install the Boost, Override/Jettison Pump Wiring.

G. Install the Boost, Override/Jettison Pump Wiring

S 436-018

(1) Install the inner and outer Teflon sleeves on the wiring for the boost, override/jettison pump.
   (a) Make sure the inner and outer Teflon sleeves are each one continuous piece all the way through the conduit.
   (b) Make sure there are no splices or ties on the wiring under the Teflon sleeves.
   (c) Install ties only at the end of the Teflon sleeves.
   (d) Make sure the inner and outer Teflon sleeves extend to the first breakout after the conduit exit point on the rear spar.

S 436-042

(2) Tie the shield ground wire to the pump power wires before you put the wiring into the conduit.

BOEING PROPRIETARY - Copyright (C) - Unpublished Work - See title page for details.

S 486-076
(3) Temporarily wrap and attach each electrical connector with a protective sheet of plastic to prevent damage to the conduit.

S 436-019
(4) Use the cord at the pump location to pull the wiring through the conduit.

S 086-077
(5) Remove the plastic sheets from the electrical connectors.

S 436-043
(6) Remove the tie from the shield ground wire.

S 426-020
(7) Install the clamps and fasteners at each end of the conduit.

NOTE: Both sleeves must go through the clamps.

S 216-021
(8) Inspect the Teflon sleeves to make sure both sleeves are visible at each end of the wiring installation.

S 436-044
(9) Cut the installed Teflon sleeves just after the clamp or at the shield termination on the pump end (View B).

S 436-045
(10) Install inner and outer Teflon sleeves on the pump power wires from the ground shield termination or the clamp to the electrical connector.

S 436-046
(11) Make sure the inner and outer Teflon sleeves are under the electrical connector backshell.

S 436-058
(12) Install the pump shield ground wire (Views C and D).

BOEING PROPRIETARY - Copyright (C) - Unpublished Work - See title page for details.

S 436-059
(13) Make sure the bonding resistance between the wire shield and the structure is 0.005 ohm (5 millohms) or less (AMM 20-10-21/601).

S 426-022
(14) Connect the electrical connector to the pump.

S 086-074
(15) Remove the temporary identication tags from the electrical connector(s).

S 866-047
(16) If you installed a main tank boost pump wire bundle, make sure the applicable circuit breakers are closed:
(a) Main Power Distribution Panel, P6:
1) 6G24, L FWD FUEL BOOST PUMP
2) 6G15, L AFT FUEL BOOST PUMP
3) 6G18, R FWD FUEL BOOST PUMP
4) 6G21, R AFT FUEL BOOST PUMP
(b) Overhead Circuit Breaker Panel, P11:
1) 11M16, FUEL PUMPS R FWD/L AFT
2) 11M25, FUEL PUMPS L FWD/R AFT

S 866-048
(17) If you installed an auxiliary tank override/jettison pump wire bundle, make sure the applicable circuit breakers are closed:
(a) Main Power Distribution Panel, P6:
1) 6F15, L FUEL OVRD PUMP
2) 6F21, R FUEL OVRD PUMP
(b) Overhead Circuit Breaker Panel, P11:
1) 11M15, L CTR FUEL PUMPS
2) 11M24, R CTR FUEL PUMPS
(c) If the fuel jettison pumps are installed, make sure the applicable circuit breakers are closed:
1) Overhead Circuit Breaker Panel, P11:
a) 11M13, L FUEL JTSN CONT
b) 11M22, R FUEL JTSN CONT

BOEING PROPRIETARY - Copyright (C) - Unpublished Work - See title page for details.

2) Miscellaneous Electrical Equipment Panel, P36:
   a) 36F4 or 36G7, L FUEL JETT PUMP
3) Miscellaneous Electrical Equipment Panel, P37:
   a) 37F4 or 37G4, R FUEL JETT PUMP

S 766-060
(18) If you installed a jettison pump wire bundle, do the Phase Check of the Jettison Pump Wiring procedure (AMM 28-31-00/501).

S 766-061
(19) If you installed a fuel boost or override pump wire bundle, do the Phase Check of the Fuel Pump Wiring procedure (AMM 28-22-00/501).

S 416-049
(20) If you installed a main tank boost pump wire bundle, install the applicable access cover 532AB or 632AB (AMM 28-11-01/401).

S 416-050
(21) If you installed an auxiliary tank override/jettison pump wire bundle, install the applicable access cover 531AB or 631AB (AMM 28-11-02/401).

S 716-027
(22) Do an operational test for the applicable boost, override/jettison pump(s) (AMM 28-22-00/501).

TASK 28-22-15-206-028

3. Inspect the Boost, Override/Jettison Pump Conduit (Fig. 601)
   A. References
      (1) AMM 12-11-01/301, Fuel Tank Pressure Fueling
      (2) AMM 28-11-00/601, Fuel Tanks
      (3) AMM 28-11-01/401, Main Tank Access Panels
      (4) AMM 28-11-02/401, Auxiliary Tank Access Panels
      (5) AMM 28-22-15/401, Boost, Override/Jettison Wire Conduit
   B. Access
      (1) Location Zones
          531 Center Auxiliary Tank (Left)
          532 Main Tank - Inboard of Rib No. 10 (Left)
          551 Rear Spar to MLG Support Beam (Left)
          631 Center Auxiliary Tank (Right)
          632 Main Tank - Inboard of Rib No. 10 (Right)
          651 Rear Spar to MLG Support Beam (Right)
      (2) Access Panels
          531AB Access Cover (Left)
          532AB Access Cover (Left)
          631AB Access Cover (Right)
          632AB Access Cover (Right)

BOEING PROPRIETARY - Copyright (C) - Unpublished Work - See title page for details.

C. Boost, Override/Jettison Pump Conduit Inspection Preparation

S 166-051
(1) If you will inspect a main tank boost pump conduit, remove the applicable access cover 532AB or 632AB (AMM 28-11-01/401).

S 166-052
(2) If you will inspect an auxiliary tank override/jettison pump conduit, remove the applicable access cover 531AB or 631AB (AMM 28-11-02/401).

S 866-053
(3) Make sure the steps to prepare and remove the pump wiring in the conduit in the task: Inspect the Boost, Override/Jettison Pump Wiring, are completed.

D. Inspect the Applicable Boost, Override/Jettison Pump Conduit

S 216-033
(1) Do one of these tests to find if there is a fuel leak in the conduit:
(a) Use the backblowing procedure to do a leak check (AMM 28-11-00/601).
1) Use the necessary fittings to plug one end of the conduit.
2) Find the Internal Leaks.
(b) Pressurize the electrical conduit.
1) Use the necessary fittings to plug one end of the conduit.
2) Connect a pressure gage and air supply to the other end of the conduit.
3) Pressurize the electrical conduit to 20 PSIG.
4) Shut off the air supply and wait 5 minutes to examine the pressure gage.
5) Make sure the pressure has not decreased more than 0.5 PSIG.
(c) Fill the applicable fuel tank with fuel (AMM 12-11-01/301).
1) Wait 5 minutes, make sure there is no fuel leakage at the ends of the conduit.
2) Examine both the end of the electrical conduit at the spar and the end near the fuel pump.

3) Pull a clean cloth through the electrical conduit with a string.
4) Make sure there is no fuel on the cloth.

S 026-035
(2) Remove and replace any damaged conduit (AMM 28-22-15/401).

E. Put the Airplane Back to Its Usual Condition

S 446-055
(1) If the conduit is not replaced, make sure the steps to install the pump wiring in the conduit in the task: Inspect the Boost, Override/Jettison Pump Wiring, are completed.

BOEING PROPRIETARY - Copyright (C) - Unpublished Work - See title page for details.

S 416-056

(2) If you inspected a main tank boost pump wire conduit, install the applicable access cover 532AB or 632AB (AMM 28-11-01/401).

S 416-057

(3) If you inspected an auxiliary tank override/jettison pump wire conduit, install the applicable access cover 531AB or 631AB (AMM 28-11-02/401).

BOEING PROPRIETARY - Copyright (C) - Unpublished Work - See title page for details.

FUEL MANAGEMENT PANEL - REMOVAL/INSTALLATION

1. General
   A. This procedure has these tasks:
      (1) Fuel Management Panel - Removal
      (2) Fuel Management Panel - Installation

TASK 28-22-17-004-001

2. Fuel Management Panel - Removal
   A. Equipment
      (1) Circuit Breaker Lockout Clip - 1012LC-R Commercially Available
   B. References
      (1) AMM 24-22-00/201, Electrical Power - Control
   C. Access
      (1) Location Zones
          211 Control Cabin - Section 41 (Left)
          212 Control Cabin - Section 41 (Right)

   D. Prepare for the Removal

      S 864-002
      (1) Open these circuit breakers and attach DO-NO-CLOSE tags:
          (a) On the overhead circuit breaker panel, P11:
              1) 11R01, L1 IND LTS
              2) 11A33, L1 IND LTS
              3) 11M15, FUEL PUMP - LEFT CTR
              4) 11M24, FUEL PUMP - RIGHT CTR
              5) 11D36, FUEL CROSSFEED VALVE
              6) 11D35, FUEL DC PUMP CONT
              7) 11M16, FUEL PUMP - R FWD/L AFT
              8) 11M25, FUEL PUMP - L FWD/R AFT
   E. Fuel Management Panel - Removal Procedure

      S 864-020
      (1) Remove the fasteners that attach the fuel management panel (M10055) to the overhead panel (P5).

      S 864-004
      (2) Move the fuel management panel out of the overhead panel.

      S 494-019

      WARNING: MAKE SURE EACH ELECTRICAL CONNECTOR HAS A TAG TO IDENTIFY THE CORRECT INSTALLATION LOCATION TO THE FUEL MANAGEMENT PANEL. CROSS-CONNECTION OF THE ELECTRICAL CONNECTORS CAN CAUSE THE AIRPLANE SYSTEM TO MALFUNCTION AND THE LOSS OF SAFE FLIGHT.

      (3) Attach tags to the wiring for each of the electrical connectors to identify the electrical connector to the correct receptacle.

BOEING PROPRIETARY - Copyright (C) - Unpublished Work - See title page for details.

S 024-005
(4) Disconnect the electrical connectors (D1330, D1374, D1384) from the rear of the fuel management panel.

TASK 28-22-17-404-006
3. Fuel Management Panel - Installation
A. References
(1) AMM 24-22-00/201, Electrical Power - Control
(2) AMM 28-22-00/501, Engine Fuel Feed System
B. Access
(1) Location Zones
211 Control Cabin - Section 41 (Left)
212 Control Cabin - Section 41 (Right)

C. Fuel Management Panel - Installation Procedure

S 424-021

WARNING: MAKE SURE YOU CONNECT EACH ELECTRICAL CONNECTOR TO THE CORRECT RECEPTACLE LOCATION ON THE FUEL MANAGEMENT PANEL. CROSS-CONNECTION OF THE ELECTRICAL CONNECTORS CAN CAUSE THE AIRPLANE SYSTEM TO MALFUNCTION AND THE LOSS OF SAFE FLIGHT.

(1) Connect the electrical connectors (D1330, D1374, D1384) to the fuel management panel (M10055).

S 094-018
(2) Remove the tags from the electrical connectors.

S 424-009
(3) Put the fuel management panel in position and install the fasteners.

S 864-010
(4) Remove the DO-NOT-CLOSE tags and close these circuit breakers:
(a) On the overhead circuit breaker panel, P11:
1) 11R01, L1 IND LTS

BOEING PROPRIETARY - Copyright (C) - Unpublished Work - See title page for details.

2) 11A33, L1 IND LTS
3) 11M15, FUEL PUMP - LEFT CTR
4) 11M24, FUEL PUMP - RIGHT CTR
5) 11D36, FUEL CROSSFEED VALVE
6) 11D35, FUEL DC PUMP CONT
7) 11M16, FUEL PUMP - R FWD/L AFT
8) 11M25, FUEL PUMP - L FWD/R AFT

D. Fuel Management Panel - Test

S 864-011
(1) Supply electrical power (AMM 24-22-00/201).

S 724-012
(2) Do this task: Operational Test - Engine Fuel Feed System (AMM 28-22-00/501).

S 714-013
(3) Do a check of the indicator lights.
(a) Put the IND LTS switch to Dim.
(b) Push the Test switch and make sure that the indicator(s) come on.
(c) Put the IND LTS switch to Bright.
(d) Push the Test switch and make sure that the indicators come on.

S 714-014
(4) Do a check of the panel, lightplate and background lighting.
(a) Turn the Panel Dimmer fully in the clockwise direction and then fully in the counterclockwise direction.
(b) Make sure that the panel, lightplate, and background lighting changes.

E. Put the Airplane Back to Its Usual Condition

S 864-016
(1) Remove electrical power if it is not necessary (AMM 24-22-00/201).

BOEING PROPRIETARY - Copyright (C) - Unpublished Work - See title page for details.

APU FUEL FEED SYSTEM - DESCRIPTION AND OPERATION

1. General (Fig. 1)
   A. APU Fuel Feed System
      (1) The left compartment of the auxiliary fuel tank contains the APU fuel system components, with the exception of the APU fuel supply line and shroud, and the DC pump inlet. The APU fuel supply line and shroud runs between the left compartment of the auxiliary fuel tank and the APU. The DC pump inlet is located in the left main tank. The system supplies the APU with fuel upon loss of AC power or boost pump failure.
      (2) The left forward engine fuel feed system boost pump (Ref 28-22-00) normally supplies fuel to operate the APU when AC power is available on the airplane. The APU fuel feed system takes over upon loss of AC power or boost pump failure to supply the APU with fuel.
      (3) The APU fuel-feed system has these components:
         (a) The APU DC fuel pump (referred to as "the DC pump")
         (b) A check valve
         (c) The APU fuel isolation valve (referred to as "the isolation valve") (if installed)
         (d) The APU fuel shutoff valve (referred to as "the APU shutoff valve")
         (e) The APU fuel pump pressure switch (referred to as "the pressure switch")
         (f) The APU fuel line
         (g) The shroud for the APU fuel line.
      (4) The DC pump draws fuel from the left main fuel tank and only operates on AC power loss or fuel boost pump failure. The check valve lets the engine fuel-feed system supply the APU with fuel and prevents a back flow of fuel to the engine fuel-feed manifold when the DC pump operates. The isolation valve (if installed) lets the DC pump pressurize the engine fuel-feed manifold. The pressure switch on the DC pump supplies indication of pump output pressure. The DC pump or fuel boost pumps route fuel through the APU fuel line and shroud. The shroud prevents fuel, leaked from the APU fuel line, from contacting any dry surface between the DC pump and the APU. The shroud drains and vents externally aft of the wheel well area.

BOEING PROPRIETARY - Copyright (C) - Unpublished Work - See title page for details.

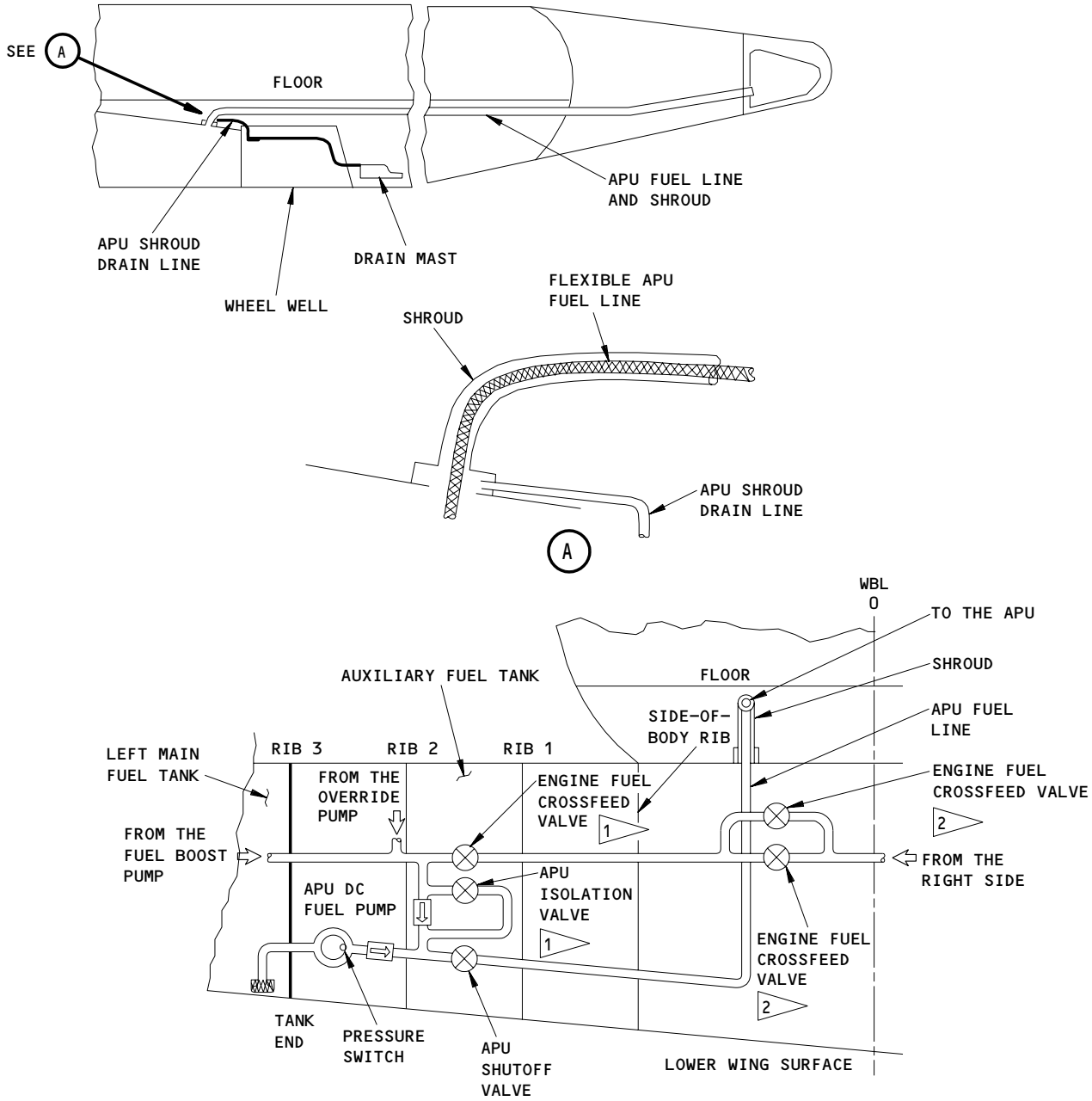

REAR SPAR VIEW

1 SAS 150-154 PRE-SB 28-34;
MTH 275-280 PRE-SB 28-34

2 SAS 150-154 POST-SB 28-34;
SAS 050-149, 155-999;
MTH 275-280 POST-SB 28-34

3 SAS 050, 051, 150-167 POST-SB 28-34;
SAS 052-149, 168-999;
MTH 275-280 POST-SB 28-34

4 SAS 050, 051, 150-167 PRE-SB 28-34;
MTH 275-280 PRE-SB 28-34

APU Fuel-Feed System
Figure 1

BOEING PROPRIETARY - Copyright (C) - Unpublished Work - See title page for details.

(5) Flight deck panels provide control and indication for the system.

2. Component Details

A. APU DC Fuel Pump (Fig. 2)

(1) Description

(a) The DC pump, a positive displacement type, consists of a pump and driving motor within a housing. The pump housing, within the fuel tank, contains a check valve and a plunger valve. The housing outlet contains the check valve. The housing inlet contains the plunger valve. The driving motor, 28VDC powered, includes a thermal fuse, a check valve, a discharge valve, and a pressure switch. The pump and drive motor are installed on the outside of the fuel tank. The motor turns at 6600 rpm and the pump assures a continuous flow of 3.1 GPM at 18 psi.

(2) Function

(a) The pump and drive motor draw fuel through the inlet port. The fuel circulates through the pump and drive motor, and exits at the outlet port. The plunger valve controls the inlet port. Mounting the pump and drive motor on the housing opens the plunger valve. Detaching the pump and drive motor from the housing closes the plunger valve to allow removing the pump and drive motor without defueling.

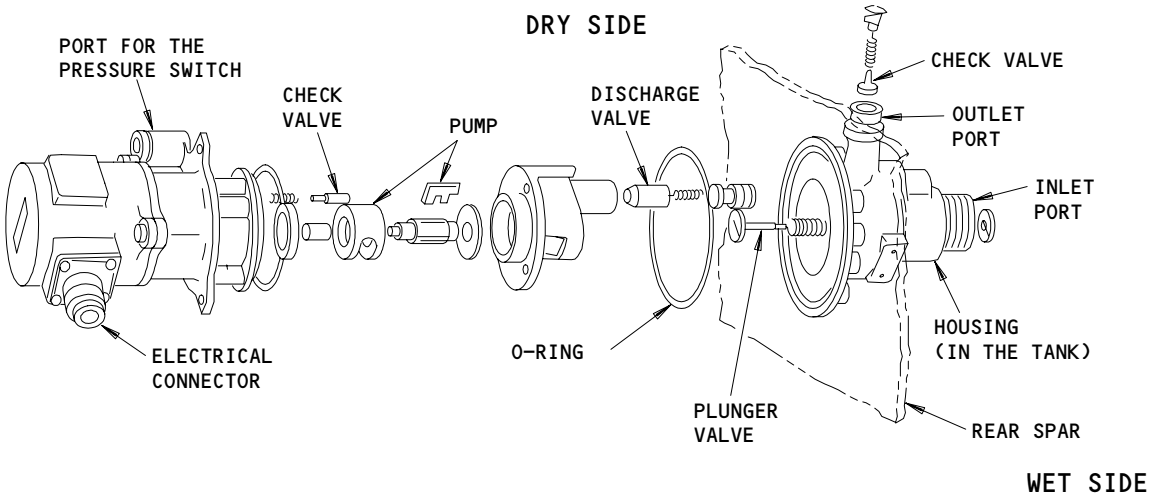

APU DC Fuel Pump
Figure 2

BOEING PROPRIETARY - Copyright (C) - Unpublished Work - See title page for details.

(b) The check valve on the outlet port prevents back flow of fuel from the fuel tank into the pump and drive motor. Operating the pump and drive motor generates internal pressure, forcing the check valve open. The open check valve permits fuel delivery to the APU or to the engine fuel-feed system.

(c) The discharge valve acts as a relief valve, controlling the pump output pressure. If outlet port pressure requires relief, the fuel inlet receives bypassed fuel from the outlet port, through the open discharge valve.

(d) Fuel enters the drive motor, to provide cooling and lubrication, through the check valve in the drive motor. The thermal fuse provides additional drive motor overheat protection. The fuse trips at 350°F ±14°F (177°C ±8°C).

B. APU Fuel Shutoff Valve and APU Fuel Isolation Valve (Fig. 3)

(1) Description

(a) Identical motor actuated ball valves, the APU fuel shutoff valve and the APU fuel isolation valve (if installed), operate on a 28VDC power. Both valves attach to the rear spar of the left auxiliary fuel tank. The valve body (in the fuel tank) attaches to the spar with four mounting studs and nuts. The ends of the same mounting studs have threaded holes to receive the bolts of the externally mounted actuator.

(b) The actuator consists of a DC drive motor, an electrical connector, open-closed limit switches, and a manual override handle which also functions as a position indicator.

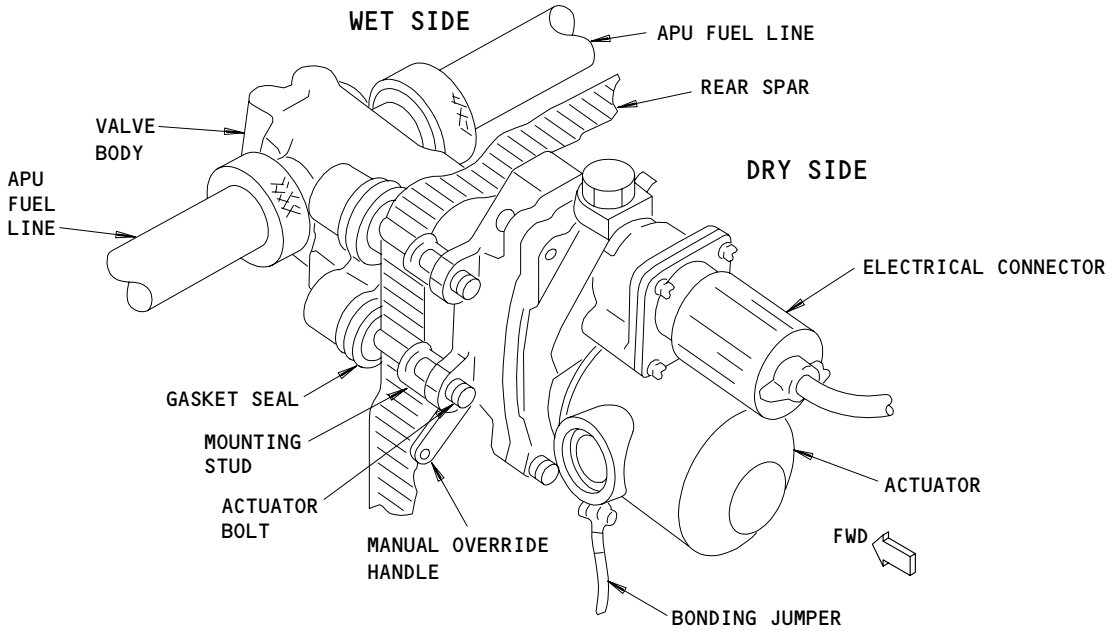

APU Fuel Shutoff Valve and APU Fuel Isolation Valve
Figure 3

BOEING PROPRIETARY - Copyright (C) - Unpublished Work - See title page for details.

(c) Two integral thermal relief valves, ported to the tank side of the valve, crack and reseat between 75 and 45 psig.

(2) Function

(a) Applying 28VDC power opens or closes the valve, depending upon the command. The actuator shaft engages the body shaft which inserts into the ball slot. During an open command the actuator shaft rotates, turning the ball within the valve body to allow fuel to flow through the ball. Upon reaching the full open position, the actuator open limit switch actuates to shut off the actuator. During a close command, the actuator shaft rotates, thus turning the ball to prevent fuel flow through the ball. Upon reaching the full closed position, the actuator closed limit switch actuates to shut off the actuator.

(b) The APU shutoff valve isolates the APU fuel line from the fuel tank.

(c) The isolation valve (if installed) prevents the main engines from depleting the pressure in the APU fuel line.

3. Operation (Fig. 4)

A. Functional Description

(1) APU Fuel Feed

(a) The engine fuel-feed system normally supplies fuel to the APU. If that source is unavailable, the APU fuel-feed system takes over. The APU fuel-feed system uses the DC pump to develop fuel pressure. The isolation valve (if installed) prevents fuel entering the engine feed manifold. The APU shutoff valve controls flow to the APU.

(2) Automatic Operation of the APU DC Fuel Pump

(a) The DC pump will operate automatically under two circumstances. One is to provide fuel pressure to the APU when AC pump pressure is not available. The other (if the isolation valve is installed) is to provide fuel pressure to the left engine when the engine has no AC pump pressure available and cannot maintain itself on suction feed.

(b) The DC pump is powered by the battery bus.

(c) With the airplane on the ground and the APU selector at START or RUN (APU Fuel Control Relay energized):

1) The DC pump will operate when (1) no AC power is available to the left forward boost pump or (2) if AC power is available and the left forward boost pump pressure switch is still indicating low pressure 10 seconds after the APU control switch is turned to ON or (3) no left side main or override boost pumps are running (low manifold pressure) with the crossfeed valve closed, or if no main or override pumps on either the left or right side are running with the crossfeed valve open.

BOEING PROPRIETARY - Copyright (C) - Unpublished Work - See title page for details.

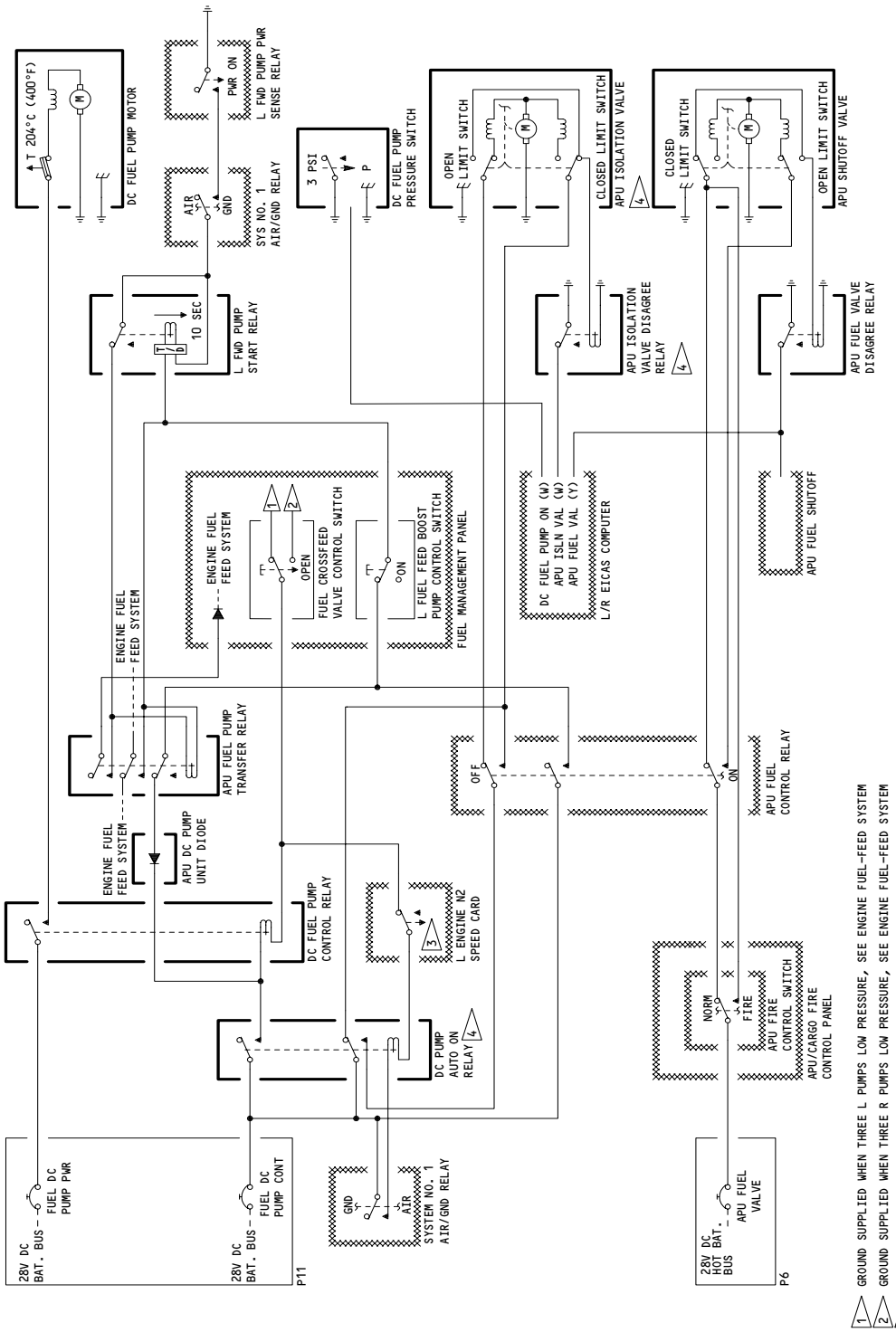

APU Fuel-Feed System Schematic
Figure 4

BOEING PROPRIETARY - Copyright (C) - Unpublished Work - See title page for details.

(3) Pressure Indication for the APU DC Fuel Pump

(a) The pressure switch on the DC pump connects to EICAS. The pressure switch trips at 3 psi, and a maintenance message DC FUEL PUMP ON is shown on EICAS.

(4) APU Shutoff Valve Control

(a) The APU command and the APU fire switch position determine the APU shutoff valve position. With the APU fire switch in NORMAL, and the APU control switch selected to ON or START, the valve opens automatically. Placing the APU control switch to ON or START energizes the APU fuel control relay, and the valve motor receives 28VDC power to open. With the APU control switch OFF, the APU fuel control relay relaxes, and 28VDC power closes the valve. Pulling the APU fire switch closes the APU shutoff valve by bypassing the 28v dc power around the APU fuel control relay. When the APU fire switch is returned to the stowed position, the APU shutoff valve will open.

(5) APU Shutoff Valve Indication

(a) The amber FAULT light on the APU control panel on the pilots overhead panel P5, and the APU FUEL VAL message on EICAS, provide indication for the APU shutoff valve. The FAULT lamp lights and EICAS displays the advisory message APU FUEL VAL when the valve position disagrees with the valve command. The open or closed limit switches on the valve pass 28VDC power to the APU fuel valve disagree relay. When the relay energizes, the amber lamp shuts off and no signal is sent to EICAS. When the relay relaxes the amber lamp lights and a signal is sent to EICAS.

(6) Isolation Valve Control

(a) The isolation valve will be opened automatically whenever the DC pump auto-on relay is energized and the APU fuel control relay is relaxed. The DC pump auto-on relay will be energized when airborne with the left engine below 67% N2 and no AC pump pressure available.

(7) Isolation Valve Indication

(a) The APU isolation valve disagree relay, when relaxed, supplies a ground for EICAS. EICAS will show a maintenance message APU ISLN VAL to indicate disagreement between commanded and actual valve position. When the isolation valve does not reach the commanded position within 10 seconds, an EICAS status message APU ISLN VAL is shown and the APU ISLN VAL maintenance message is latched into the EICAS non-volatile memory for later recall by the maintenance crew.

BOEING PROPRIETARY - Copyright (C) - Unpublished Work - See title page for details.

APU FUEL-FEED SYSTEM

COMPONENT	FIG. 102 SHT	QTY	ACCESS/AREA	AMM REFERENCE
ACTUATOR - APU ISOLATION VALVE, V97 [1]	2	1	L WHEEL WELL, REAR SPAR	28-25-04
ACTUATOR - APU SHUTOFF VALVE, V96	2	1	L WHEEL WELL, REAR SPAR	28-25-02
APU FUEL LINE AND SHROUD - CENTER COMPARTMENT	3		136KZ	
APU FUEL LINE AND SHROUD - FUSELAGE	3		AFT CARGO COMPT	
APU FUEL LINE AND SHROUD - LEFT AUXILIARY	2	1	531BB	28-25-04
FUEL TANK	3	1	531BB	28-25-05
CIRCUIT BREAKER -	1		FLT COMPT, P6	
APU FUEL VALVES, C1063		1	6E3	*
CIRCUIT BREAKER -	1		FLT COMPT, P11	
DC FUEL PUMP CONT, C1052		1	11D35	*
DC FUEL PUMP PWR, C1058		1	11D34	*
DIODE - (FIM 31-01-37/101)				
APU DC PUMP CONT, R39				
PUMP - APU DC FUEL, M336	2	1	L WHEEL WELL, REAR SPAR	28-25-01
RELAY - (FIM 31-01-37/101)				
APU ISLN VALVE DISAGREE, K523 [1]				
APU PUMP TRANS, K505				
APU VALVE DISAGREE, K192				
DC FUEL PUMP CONTROL, K191				
DC PUMP AUTO ON CONT, K632 [1]				
L FWD PUMP START, K512				
SWITCH - APU DC FUEL PUMP PRESSURE, S74				
VALVE - APU ISOLATION [1]	2	1	531BB	28-25-02
VALVE - APU SHUTOFF	2	1	L WHEEL WELL, REAR SPAR	28-25-03

* SEE THE WDM EQUIPMENT LIST

[1] SAS 050,051,150-167 WITHOUT SB 28-34;
MTH 275-280 WITHOUT SB 28-34

APU Fuel-Feed System - Component Index
Figure 101

BOEING PROPRIETARY - Copyright (C) - Unpublished Work - See title page for details.

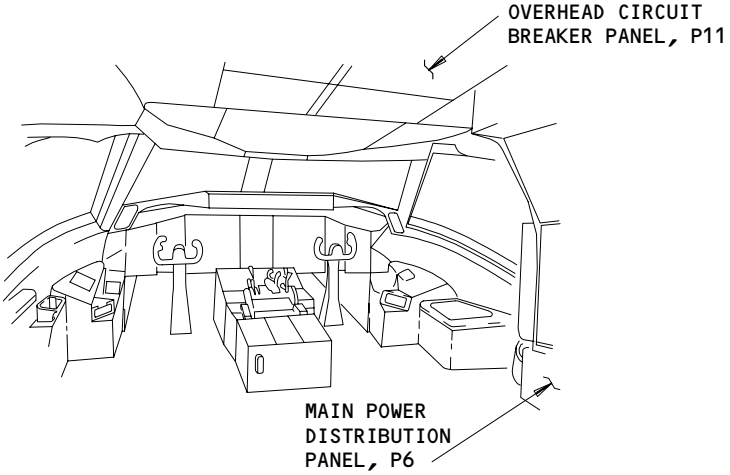

FLIGHT COMPARTMENT

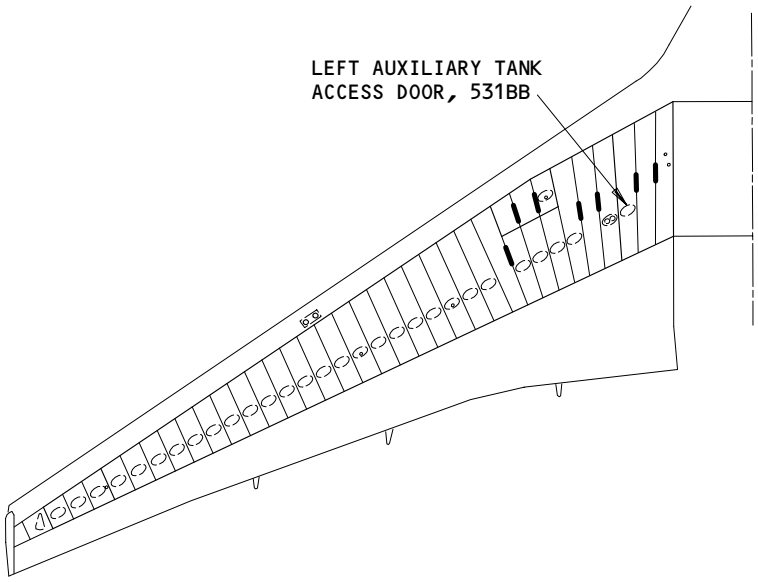

LEFT WING

APU Fuel-Feed System - Component Location
Figure 102 (Sheet 1)

BOEING PROPRIETARY - Copyright (C) - Unpublished Work - See title page for details.

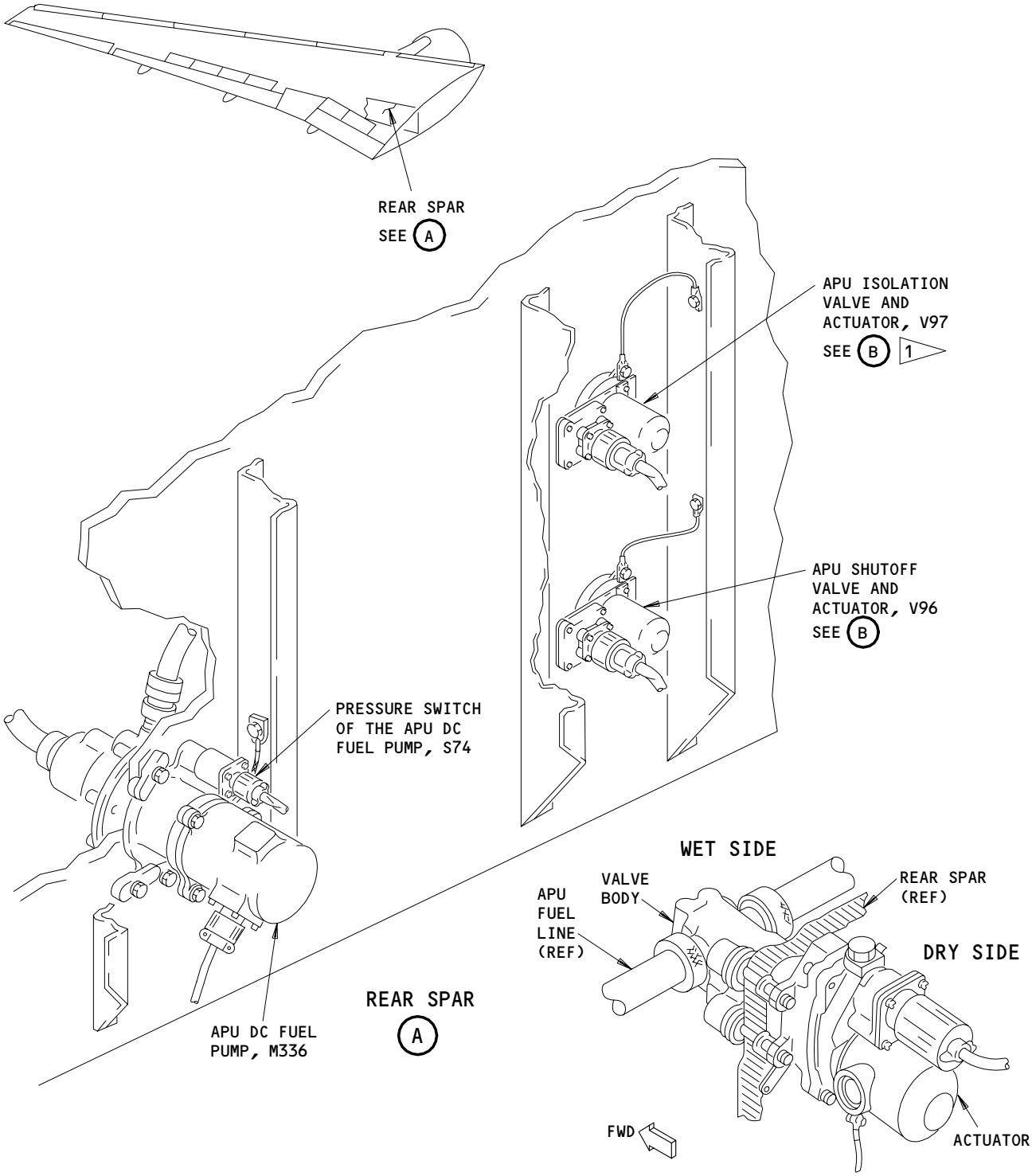

1 MTH 275-280 WITHOUT SB 28-34;
SAS 050,051,150-167 WITHOUT SB 28-34

APU Fuel-Feed System - Component Location
Figure 102 (Sheet 2)

BOEING PROPRIETARY - Copyright (C) - Unpublished Work - See title page for details.

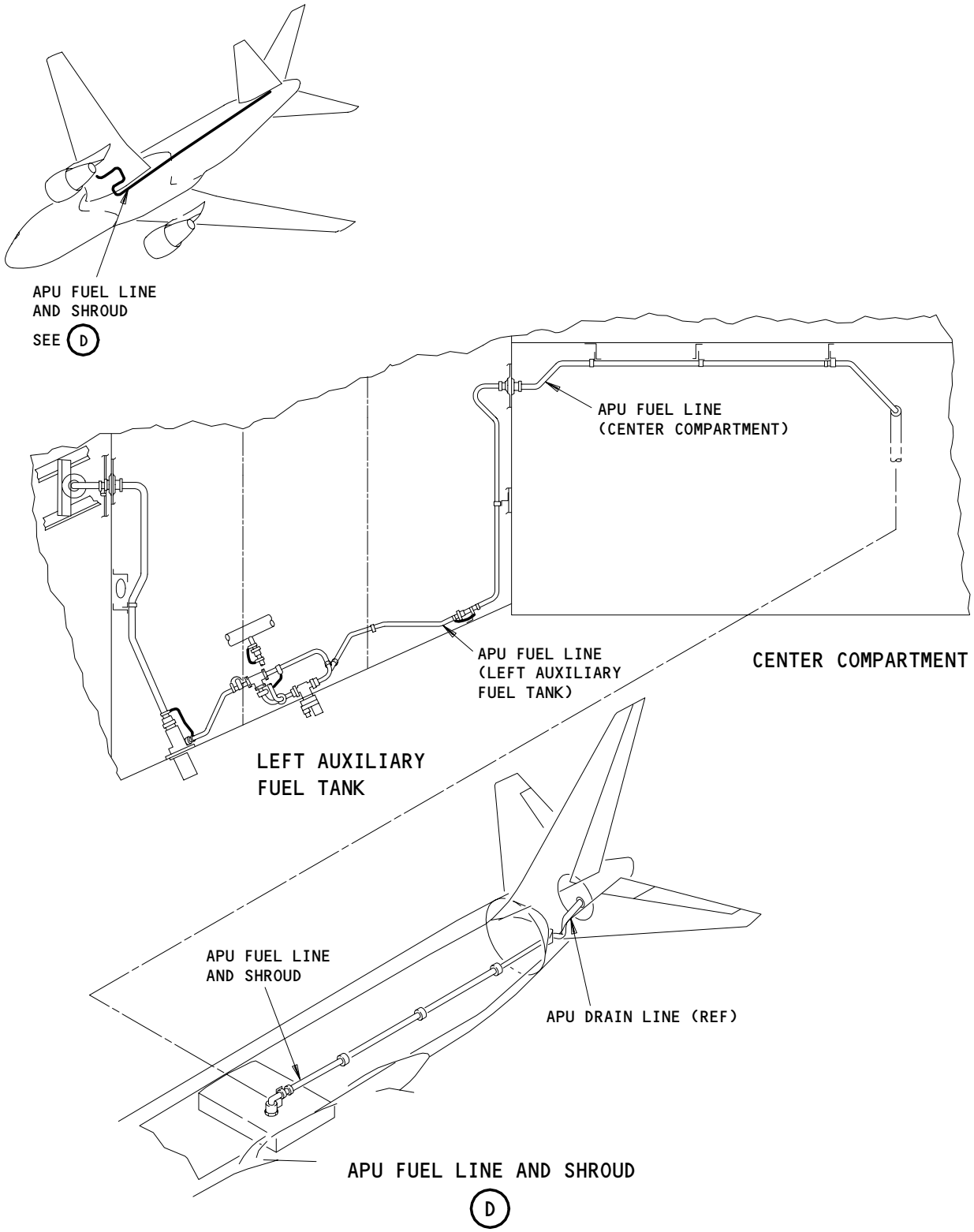

APU Fuel-Feed System - Component Location
Figure 102 (Sheet 3)

BOEING PROPRIETARY - Copyright (C) - Unpublished Work - See title page for details.

APU FUEL FEED SYSTEM - MAINTENANCE PRACTICES

1. General
   A. This procedure contains two tasks. The first task purges air from the APU fuel supply line. The second task does a check for fuel leaks on the APU fuel feed line.

   TASK 28-25-00-872-001

2. Purge the Air from the APU Fuel Supply Line (Fig. 201)
   A. General
      (1) To purge the APU fuel supply line:
         (a) Loosen the connector on the APU fuel inlet line.
         (b) Pressurize the APU fuel supply line.
   B. Equipment
      (1) Container - 5 gallon capacity, for use with fuel
   C. References
      (1) 06-42-00/201, Empennage (Major Zone 300) Access Doors and Panels
      (2) 24-22-00/201, Electric Power Control
      (3) 49-11-00/201, Auxiliary Power Unit (APU)
   D. Access
      (1) Location Zones
         315 APU Compartment (Left)
         316 APU Compartment (Right)

      (2) Access Panels
         315AL APU Access Door (Left)
         316AR APU Access Door (Right)

   E. Procedure

      S 212-002
      (1) Make sure the APU master control switch on the overhead panel, P5, is in the OFF position and attach a DO-NOT-OPERATE tag.

      S 012-005
      (2) Open the left and right APU access doors, 315AL and 316AR, and install the hold-open rods (Ref 06-42-00).

BOEING PROPRIETARY - Copyright (C) - Unpublished Work - See title page for details.

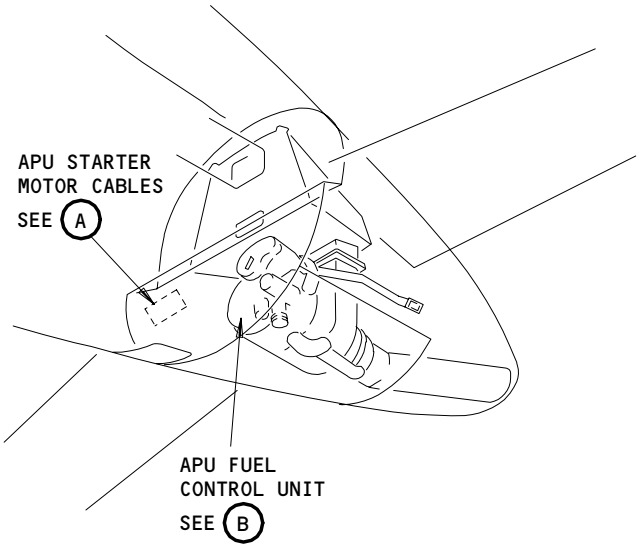

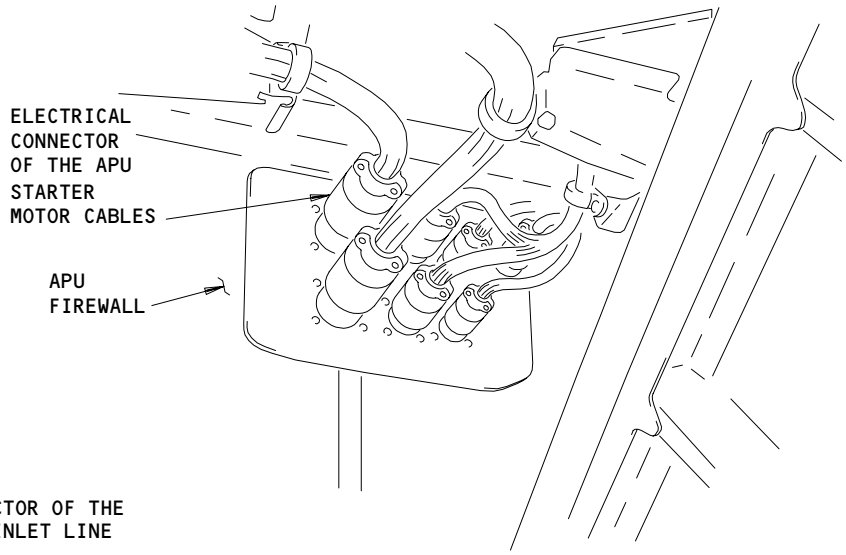

APU STARTER MOTOR CABLES

A

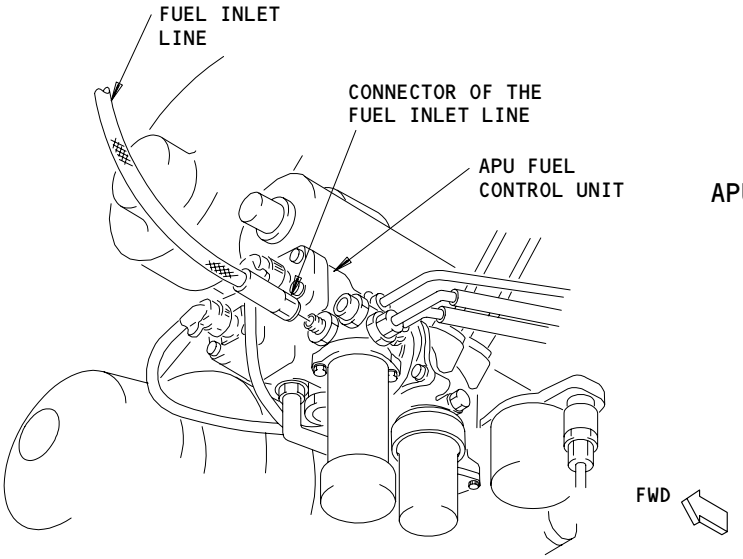

APU FUEL CONTROL UNIT

B

APU Fuel Inlet Line and Starter Motor Cables Location
Figure 201

BOEING PROPRIETARY - Copyright (C) - Unpublished Work - See title page for details.

S 032-003
(3) Disconnect the electrical connectors for the APU starter motor cables from the APU firewall.

S 032-012
(4) Disconnect the connector of the fuel inlet line at the APU fuel control unit.

S 862-013
(5) Remove the DO-NOT-OPERATE tag from the APU master control switch on the P5 panel.

S 862-006
(6) Open this circuit breaker on the main power distribution panel, P6, and attach a DO-NOT-CLOSE tag:
(a) 6G24, L FWD FUEL BOOST PUMP

S 212-007
(7) Make sure these switch-lights of the fuel management panel on the P5 panel are in the position shown:

SWITCH-LIGHT	POSITION
AFT L PUMP	OFF
AFT R PUMP	OFF
FWD L PUMP	OFF
FWD R PUMP	OFF
LEFT C PUMP	OFF
RIGHT C PUMP	OFF

S 862-015
(8) Supply electrical power (Ref 24-22-00).

BOEING PROPRIETARY - Copyright (C) - Unpublished Work - See title page for details.

S 862-016
(9) Put the APU master control switch on the P5 panel to the ON position to operate the APU DC fuel pump.

S 492-018
(10) Put the container in position to catch fuel.

S 862-019
(11) Operate the APU DC fuel pump until a minimum of 3 gallons of fuel drains from the fuel inlet line.

NOTE: This purges the air from the APU fuel supply line.

(a) If the low pressure indication light comes on for the APU DC fuel pump, immedidately shut down the APU (AMM 49-11-00/201) so the pump will shut off. The switch for the APU DC fuel pump will not shut off the pump if the APU is operating.

S 862-020
(12) Put the APU master control switch on the P5 panel to the OFF position and attach a DO-NOT-OPERATE tag.

S 432-022
(13) Connect the connector of the fuel inlet line at the APU fuel control unit.

S 432-023
(14) Connect the electrical connectors of the APU starter motor cables to the APU firewall.

S 412-008
(15) Remove the hold-open rods and close the left and right APU access doors, 315AL and 316AR (Ref 06-42-00).

S 862-024
(16) Remove the DO-NOT-OPERATE tag from the APU master control switch on the P5 panel.

S 862-029
(17) Remove the DO-NOT-CLOSE tag and close this circuit breaker on the P6 panel:
(a) 6G24, L FWD FUEL BOOST PUMP

S 862-025
(18) Remove electrical power (Ref 24-22-00).

S 862-026
(19) Operate the APU (Ref 49-11-00).

BOEING PROPRIETARY - Copyright (C) - Unpublished Work - See title page for details.

TASK 28-25-00-792-027

3. Leak Test of the APU Fuel Feed Line

A. References

(1) 20-10-09/401, Flareless Tubing Assembly

(2) 28-25-05/401, APU Fuel Supply Line and Shroud

B. Access

(1) Location Zone

136 Environment Control System Bay (Right)

C. Procedure

S 162-028

(1) Rub all fuel off the drain mast of the APU fuel feed line.

S 212-010

(2) Monitor the drain mast of the APU fuel feed line.

S 962-011

(3) If fuel collects on or flows from the drain mast, repair (Ref 20-10-09) or replace (Ref 28-25-05) the APU fuel feed line.

BOEING PROPRIETARY - Copyright (C) - Unpublished Work - See title page for details.

APU FUEL FEED SYSTEM - ADJUSTMENT/TEST

1. General
   A. This procedure contains two tasks. The first task is an operational test of the APU fuel feed system. The second task is a system test of the APU shroud and the APU shroud drain line.

TASK 28-25-00-715-001

2. Operational Test - APU Fuel Feed System

NOTE: The left engine N2 speed card must operate to do this test.

A. References
   (1) AMM 06-44-00/201, Wing Access Doors and Panels
   (2) AMM 12-11-01/301, Fuel Tank Pressure Fueling
   (3) AMM 24-22-00/201, Electrical Power Control
   (4) AMM 27-61-00/201, Spoiler/Speedbrake Control System
   (5) AMM 31-41-00/201, EICAS
   (6) AMM 32-00-15/201, Landing Gear Door Locks
   (7) AMM 32-00-20/201, Landing Gear Downlocks
   (8) AMM 32-09-02/201, Air/Ground Relays

B. Access
   (1) Location Zones
       531 Center Auxiliary Tank (Left)
       532 Main Tank - Inboard of Rib No. 10 (Left)

   (2) Access Panels
       532AB Access Cover (Left)

C. Prepare for Test

   S 215-003
   (1) Make sure the downlocks are installed on the nose and main landing gear (AMM 32-00-20/201).

   S 865-071

   WARNING: USE THE PROCEDURE IN AMM 32-00-15/201 TO INSTALL THE DOOR LOCKS. THE DOORS OPEN AND CLOSE QUICKLY AND CAN CAUSE INJURY TO PERSONS OR DAMAGE TO EQUIPMENT.

   (2) Open the doors for the main landing gear and install the door locks (AMM 32-00-15/201).

BOEING PROPRIETARY - Copyright (C) - Unpublished Work - See title page for details.

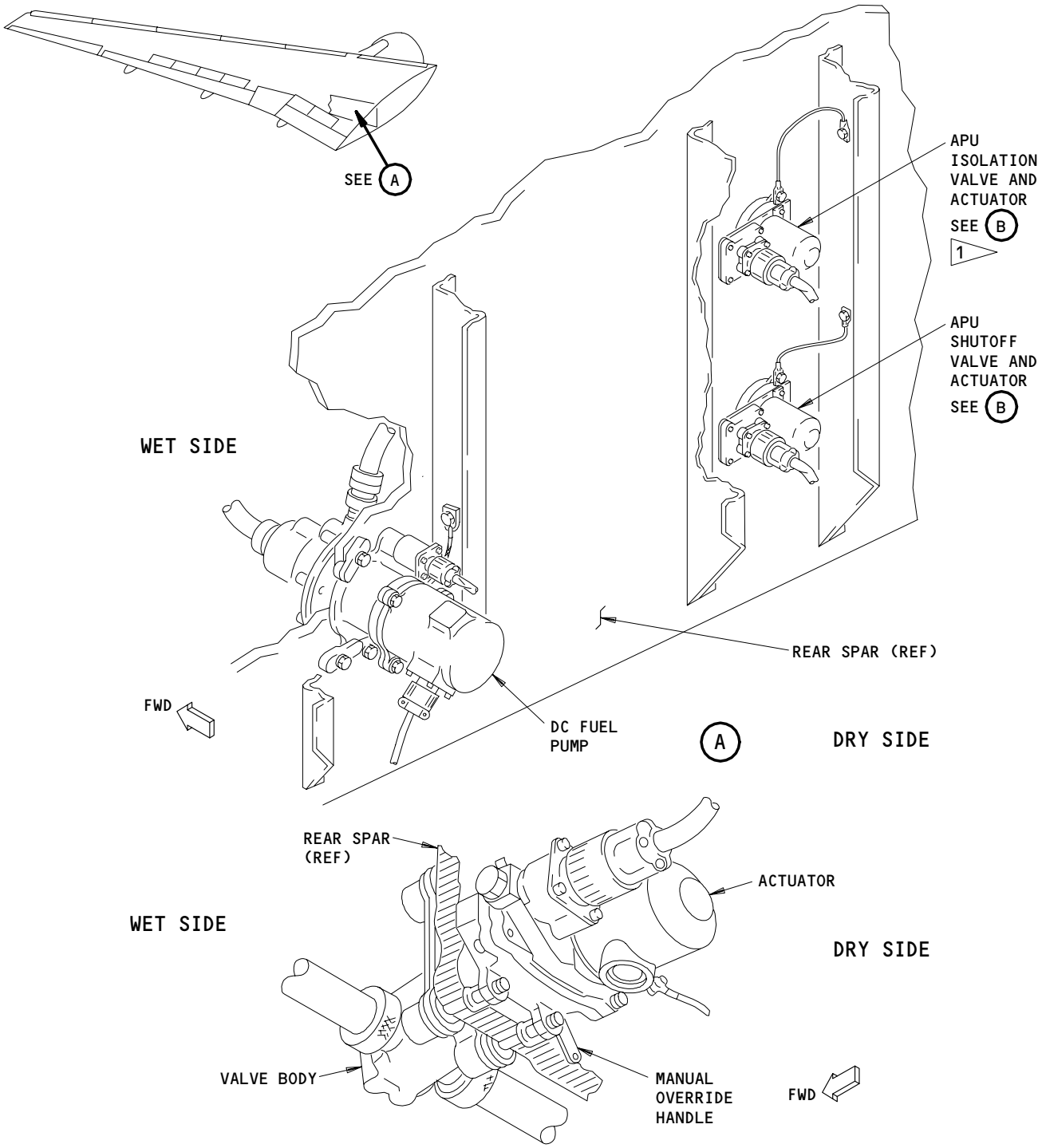

1 SAS 050,051,150-156,162-166 WITHOUT SB 28-34;
MTH 275,276 WITHOUT SB 28-34

APU Isolation Valve and APU Shutoff Valve
Figure 501

BOEING PROPRIETARY - Copyright (C) - Unpublished Work - See title page for details.

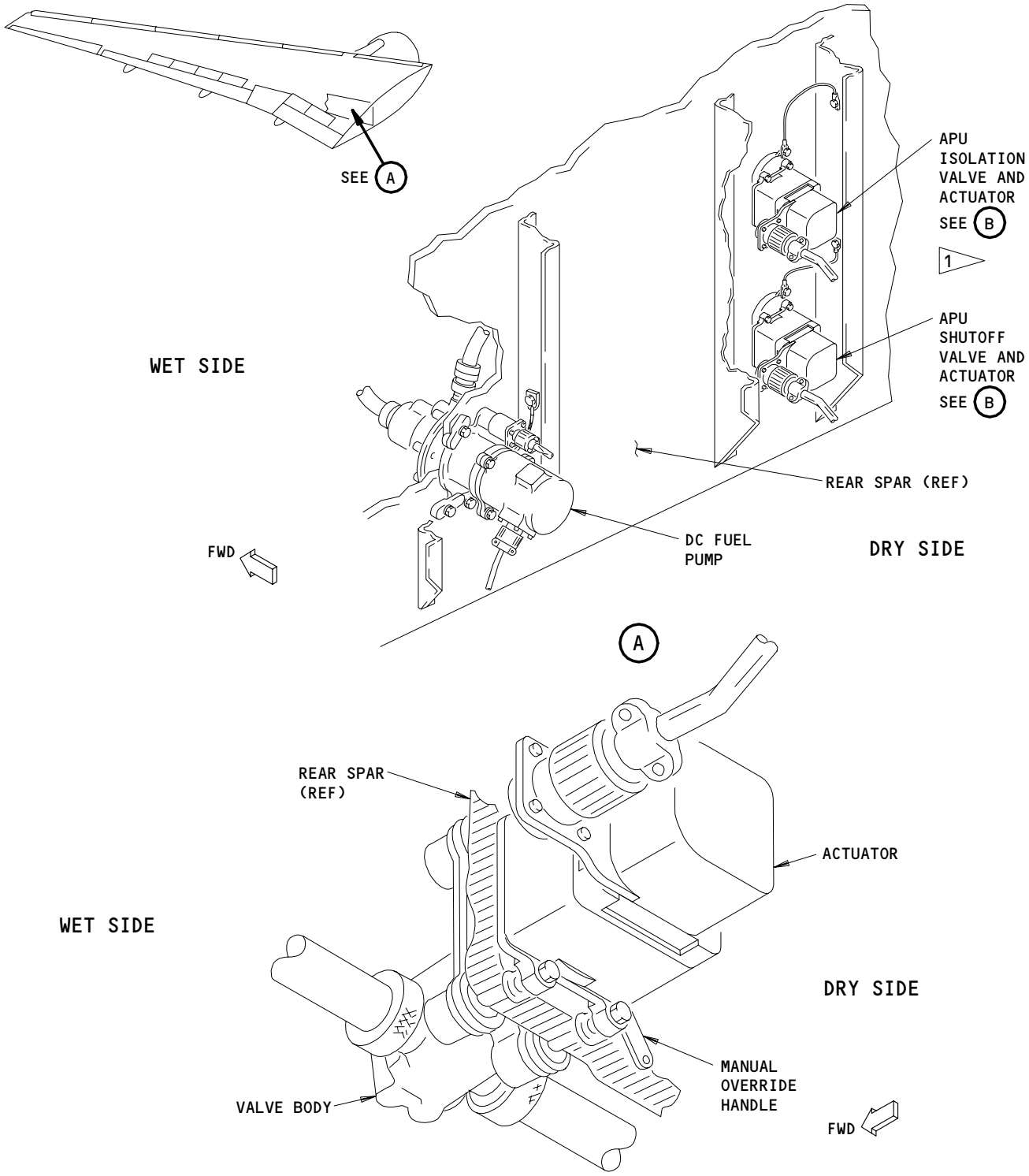

APU ISOLATION VALVE AND APU SHUTOFF VALVE

1 SAS 157-161,167 WITHOUT SB 28-34;
MTH 277-280 WITHOUT SB 28-34

B

APU Isolation Valve and APU Shutoff Valve
Figure 501A

BOEING PROPRIETARY - Copyright (C) - Unpublished Work - See title page for details.

S 655-004
(3) Refuel the left main fuel tank with 500 pounds (227 kilograms) of fuel minimum (AMM 12-11-01/301).

S 865-078
(4) Supply electrical power (AMM 24-22-00/201).

S 865-007
(5) Put the BAT switch on the overhead panel, P5 to the ON position.

S 215-009
(6) Make sure the six EICAS circuit breakers on the overhead circuit breaker panel, P11, are closed.

S 865-179
(7) Make sure these circuit breakers are closed:
(a) On the overhead circuit breaker panel, P11:
1) 11D34, DC FUEL PUMP POWER
2) 11D35, DC FUEL PUMP CONT
(b) On the main power distribution panel, P6:
1) 6E3, APU FUEL VALVES

S 215-011
(8) Make sure the APU master control switch of the APU control panel on the P5 panel is in the OFF position.

S 215-013
(9) Make sure the EICAS maintenance message, DC FUEL PUMP ON, does not show on the bottom display.

S 865-262
(10) SAS 050, 051, 150-167 WITHOUT SB 28-34;
MTH 275-280 WITHOUT SB 28-34;
Make sure these switch-lights of the fuel management panel on the P5 panel are in the position shown:

SWITCH-LIGHT	POSITION
FWD L PUMP	OFF
AFT L PUMP	OFF
FWD R PUMP	OFF
AFT R PUMP	OFF
FUEL CROSSFEED	CLOSED

BOEING PROPRIETARY - Copyright (C) - Unpublished Work - See title page for details.

S 865-219
(11) SAS 050, 051, 150-167 POST-SB 28-34;
SAS 052-149, 168-999;
MTH 275-280 POST-SB 28-34;
MTH 281-999;
Make sure these switch-lights of the fuel management panel on the P5 panel are in the position shown:

SWITCH-LIGHT	POSITION
FWD L PUMP	OFF
AFT L PUMP	OFF
FWD R PUMP	OFF
AFT R PUMP	OFF
FWD FUEL XFEED	CLOSED
AFT FUEL XFEED	CLOSED

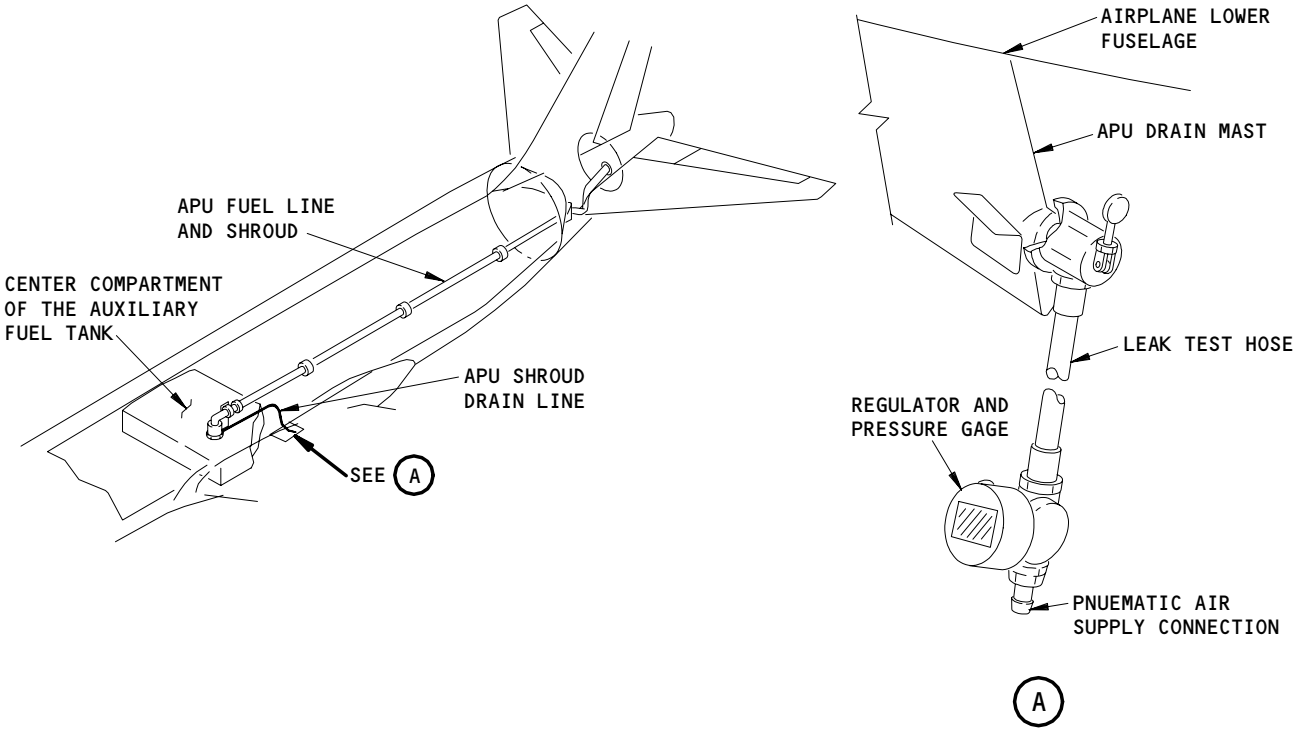

APU Shroud and Drain Tubing Leak Test
Figure 502

BOEING PROPRIETARY - Copyright (C) - Unpublished Work - See title page for details.

D. Test of the APU Fuel Feed System

S 715-257

(1) SAS 050, 051, 150-167 PRE-SB 28-34;
MTH 275-280 PRE-SB 28-34;
Do these steps to make sure the DC pump comes on automatically to supply fuel pressure to the left engine in flight mode:

(a) Push the ECS MSG switch on the EICAS MAINT panel on the right side panel, P61.

(b) Make sure the EICAS message, APU ISLN VAL, does not show on the bottom display.

1) If the EICAS message, APU ISLN VAL, shows on the bottom display,
do the Maintenance Message Erase procedure (Ref 31-41-00).

WARNING: MAKE SURE THAT THE FLIGHT MODE SIMULATION PROCEDURE IS DONE CORRECTLY. INJURY OR DAMAGE CAN OCCUR IF THE PROCEDURE IS NOT DONE CORRECTLY.

(c) Do the Flight Mode Simulation procedure for the No. 1 air/ground system (AMM 32-09-02/201), but do not open this P11 circuit breaker:

NOTE: The No. 2 air/ground system relay must be in the ground mode to get the EICAS maintenance page.

1) 11D34, FUEL DC PUMP PWR

(d) Listen for the DC fuel pump operation at the rear spar of the left auxiliary fuel tank.

1) If the low pressure indication light comes on during the APU DC fuel pump operation, immedidately shut down the APU (AMM 49-11-00/201) so the pump will shut off. The switch for the APU DC fuel pump will not shut off the pump if the APU is operating.

(e) Make sure the manual override handle on the APU isolation valve moves to the open position (Fig. 501).

(f) Make sure the EICAS message, APU ISLN VAL, shows on the bottom display while the APU isolation valve moves to the open postion.

NOTE: If the APU isolation valve does not move to the open position in 10 seconds, the EICAS message, APU ISLN VAL, latches into the EICAS memory and must be erased (AMM 31-41-00/201).

(g) Make sure the EICAS maintenance message, DC FUEL PUMP ON, shows on the bottom display.

(h) Put the airplane back to the ground mode (AMM 32-09-02/201).

(i) Make sure the manual override handle on the APU isolation valve moves to the closed position (Fig. 501).

BOEING PROPRIETARY - Copyright (C) - Unpublished Work - See title page for details.

(j) Make sure the EICAS message, APU ISLN VAL, shows on the bottom display while the APU isolation valve moves to the closed position.

NOTE: If the APU isolation valve is not in the closed position in 10 seconds the EICAS message, APU ISLN VAL, latches into the EICAS memory and must be erased (AMM 31-41-00/201).

S 865-020

(2) Open this circuit breaker on the main power distribution panel, P6, and attach DO-NOT-CLOSE tag:
(a) 6G24, L FWD FUEL BOOST PUMP

S 865-021

CAUTION: DO NOT PUT THE APU MASTER CONTROL SWITCH TO THE "START" POSITION. THE APU COULD START AND CAUSE DAMAGE.

(3) Turn the APU master control switch on the P5 panel to the ON position.

S 215-024

(4) Make sure the manual override handle on the APU shutoff valve moves to the open position.

S 215-025

(5) Make sure the APU FAULT light on the APU control panel comes on while the APU shutoff valve moves to the open position.

S 865-026

(6) Open this circuit breaker on the P6 panel and attach a DO-NOT-CLOSE tag:
(a) 6G1, FIRE EXT APU 1

BOEING PROPRIETARY - Copyright (C) - Unpublished Work - See title page for details.

S 865-027

(7) Open these circuit breakers on the overhead circuit breaker panel, P11, and attach DO-NOT-CLOSE tags:
   (a) 11B34, APU REMOTE FIRE IND
   (b) 11B19, FIRE SWITCH UNLOCK
   (c) 11S24, APU BLEED CONT
   (d) 11B16, AURAL WARN SPKR L
   (e) 11H35, AURAL WARN SPKR R

S 865-028

CAUTION: DO NOT TURN THE APU FIRE HANDLE. IF YOU TURN THE APU FIRE HANDLE THE CONTENTS OF THE FIRE BOTTLE CAN ACCIDENTALLY RELEASE AND CAUSE DAMAGE.

(8) Pull the APU fire handle on the aft control stand, P8, out to the emergency fire position.

NOTE: To pull the APU fire handle to the emergency fire position, it is necessary to use the manual unlock push-button behind the APU fire handle.

S 215-029

(9) Make sure the manual override handle on the the APU shutoff valve moves to the closed position.

S 215-030

(10) Make sure the APU FAULT light on the APU control panel comes on.

S 865-031

(11) Put the APU fire handle on the P8 stand to the usual position.

S 215-032

(12) Make sure the manual override handle on the APU fuel shutoff valve moves to the open position.

BOEING PROPRIETARY - Copyright (C) - Unpublished Work - See title page for details.

S 215-033
(13) Make sure the APU FAULT light on the APU control panel goes off.

S 865-034
(14) Remove the DO-NOT-CLOSE tag and close this circuit breaker on the P6 panel:
(a) 6G1, FIRE EXT APU 1

S 865-035
(15) Remove the DO-NOT-CLOSE tags and close these circuit breakers on the P11 panel:
(a) 11B34, APU REMOTE FIRE IND
(b) 11B19, FIRE SWITCH UNLOCK
(c) 11S24, APU BLEED CONT
(d) 11B16, AURAL WARN SPKR L
(e) 11H35, AURAL WARN SPKR R

S 215-036
(16) Make sure the EICAS maintenance message, DC FUEL PUMP ON, shows on the bottom display.

S 865-037
(17) Remove the DO-NOT-CLOSE tag and close this circuit breaker on the P6 panel:
(a) 6G24, L FWD FUEL BOOST PUMP

S 285-059
(18) Listen for the left forward fuel boost operation at the access cover 532AB (AMM 06-44-00/201).

S 285-060
(19) Listen at the rear spar of the left auxiliary tank and make sure the DC fuel pump does not operate.

S 215-061
(20) Make sure the EICAS maintenance message, DC FUEL PUMP ON, does not show on the bottom display.

BOEING PROPRIETARY - Copyright (C) - Unpublished Work - See title page for details.

S 215-062
(21) Make sure the FWD L PUMP PRESS light of the fuel management panel on the P5 panel goes off.

S 865-065
(22) Push the FWD L PUMP switch-light of the fuel management panel on the P5 panel to the ON position.

S 215-066
(23) Make sure the ON flowbar on the FWD L PUMP switch-light comes on.

S 865-067
(24) Push the FWD L PUMP switch-light on the P5 panel to the off position.

S 865-038
(25) Open this circuit breaker on the P6 panel and attach a DO-NOT-CLOSE tag:
(a) 6G24, L FWD FUEL BOOST PUMP

S 215-039
(26) Make sure the L FWD PUMP PRESS light on the P5 panel comes on.

S 215-040
(27) Make sure the EICAS maintenance message, DC FUEL PUMP ON, shows on the bottom display.

S 865-041
(28) Turn the APU master control switch on the P5 panel to the OFF position.

S 215-043
(29) Make sure the manual override handle on the APU shutoff valve moves to the closed position.

BOEING PROPRIETARY - Copyright (C) - Unpublished Work - See title page for details.

S 215-044
(30) Make sure the APU FAULT light on the APU control panel comes on while the APU shutoff valve moves to the closed position.

S 215-045
(31) Make sure the EICAS maintenance message, DC FUEL PUMP ON, does not show on the bottom display.

S 865-075

WARNING: USE THE PROCEDURE IN AMM 32-00-15/201 TO REMOVE THE DOOR LOCKS. THE DOORS OPEN AND CLOSE QUICKLY AND CAN CAUSE INJURY TO PERSONS OR DAMAGE TO EQUIPMENT.

(32) Remove the door locks from the main landing gear doors and close the doors (AMM 32-00-15/201).

S 865-261
(33) Remove the DO-NOT-CLOSE tag and close this circuit breaker on the P6 panel:
(a) 6G24, L FWD FUEL BOOST PUMP

S 865-076
(34) Remove electrical power if it is not necessary (Ref 24-22-00).

TASK 28-25-00-735-077
3. System Test - APU Shroud and APU Shroud Drain Line (Fig. 502)
A. General
(1) This procedure does a check of the APU shroud and the APU shroud drain line for leaks.
B. Equipment
(1) APU Fuel Line Shroud Test Equipment - Recommended:
(a) Adapter Assembly - A28005-24

BOEING PROPRIETARY - Copyright (C) - Unpublished Work - See title page for details.

(b) Test Hose - A28005-50
(2) APU Fuel Line Shroud Test Equipment - Alternate:
(a) Adapter Assembly - A28005-24
(b) Test Hose - A28005-42
(3) APU Fuel Line Shroud Test Equipment - Alternate:
(a) Test Equipment - A28005-35

NOTE: This test equipment is contains an adapter assembly and a test hose.

(4) Pneumatic Air Supply Equipment, capable of delivering and maintaining up to 20 psig - Commercially available

C. Access
(1) Location Zone
135 Environmental Control System Bay (Left)

D. Test of the APU Shroud and the APU Shroud Drain Line

S 485-082

CAUTION: MAKE SURE YOU ADJUST THE TESTER NIPPLE CORRECTLY AND DO NOT USE TOO MUCH FORCE ON THE TESTER HANDLE. YOU CAN DAMAGE THE TUBE IN THE DRAIN MAST IF YOU USE TOO MUCH FORCE.

(1) Install the leak test hose with the adapter assembly on the APU shroud drain line at the APU drain mast (Fig. 502).

NOTE: The APU shroud drain is the bottom hole of the two holes on the drain mast.

S 495-049
(2) Connect the pneumatic air supply to the leak test hose.

S 785-050

CAUTION: DO NOT SUPPLY PRESSURE OF MORE THAN 20 PSIG. TOO MUCH PRESSURE CAN CAUSE THE APU FUEL LINE TO CLOSE AND CAUSE DAMAGE TO THE AIRPLANE.

(3) Slowly and continuously pressurize the APU shroud and the APU shroud drain line to 18 ±1 psig, or to the limit of the regulator.

S 215-080
(4) Make sure the pressure is stable.

BOEING PROPRIETARY - Copyright (C) - Unpublished Work - See title page for details.

S 785-362
(5) Close the shutoff valve on the test equipment to lock in the pressure.

S 215-052
(6) Make sure that the pressure does not decrease more than 0.1 psig for 5 minutes.

NOTE: If the pressure decreases, the seals leak or the fittings leak, or there are bad parts.

S 785-053
(7) Slowly and continuously decrease the pressure to ambient.

S 095-054
(8) Disconnect the pneumatic air supply.

S 085-055
(9) Disconnect the leak test hose from the APU shroud drain line at the APU drain mast.

BOEING PROPRIETARY - Copyright (C) - Unpublished Work - See title page for details.

APU DC FUEL PUMP - REMOVAL/INSTALLATION

1. General
   A. The APU DC fuel pump is installed on the rear spar of the left wing. The APU DC fuel pump contains a motor impeller and a housing. The motor impeller is installed on the aft face of the rear spar, out of the auxiliary fuel tank. The housing is installed on the front face of the rear spar, in the auxiliary fuel tank.
   B. This procedure contains four tasks. The first task removes the motor impeller of the APU DC fuel pump. The second task installs the motor impeller of the APU DC fuel pump. The third task removes the housing of the APU DC fuel pump. The fourth task installs the housing of the APU DC fuel pump.

TASK 28-25-01-004-001

2. Remove the Motor Impeller of the APU DC Fuel Pump (Fig. 401)
   A. References
      (1) AMM 28-25-03/401, APU Fuel Pump Pressure Switch
      (2) AMM 32-00-15/201, Landing Gear Door Locks
      (3) AMM 32-00-20/201, Landing Gear Downlocks
   B. Access
      (1) Location Zone
          531 Center Auxiliary Tank (Left)

   C. Procedure

      S 214-002
      (1) Make sure the downlocks are installed on the nose and main landing gear (AMM 32-00-20/201).

      S 494-004

      WARNING: USE THE PROCEDURE IN AMM 32-00-15/201 TO INSTALL THE DOOR LOCKS. THE DOORS OPEN AND CLOSE QUICKLY AND CAN CAUSE INJURY TO PERSONS OR DAMAGE TO EQUIPMENT.

      (2) Open the doors for the landing gear and install the door locks (AMM 32-00-15/201).

      S 864-023
      (3) Open these circuit breakers and attach DO-NOT-CLOSE tags:
          (a) On the overhead circuit breaker panel, P11:
              1) 11D34, FUEL DC PUMP PWR
              2) 11D35, FUEL DC PUMP CONT

BOEING PROPRIETARY - Copyright (C) - Unpublished Work - See title page for details.

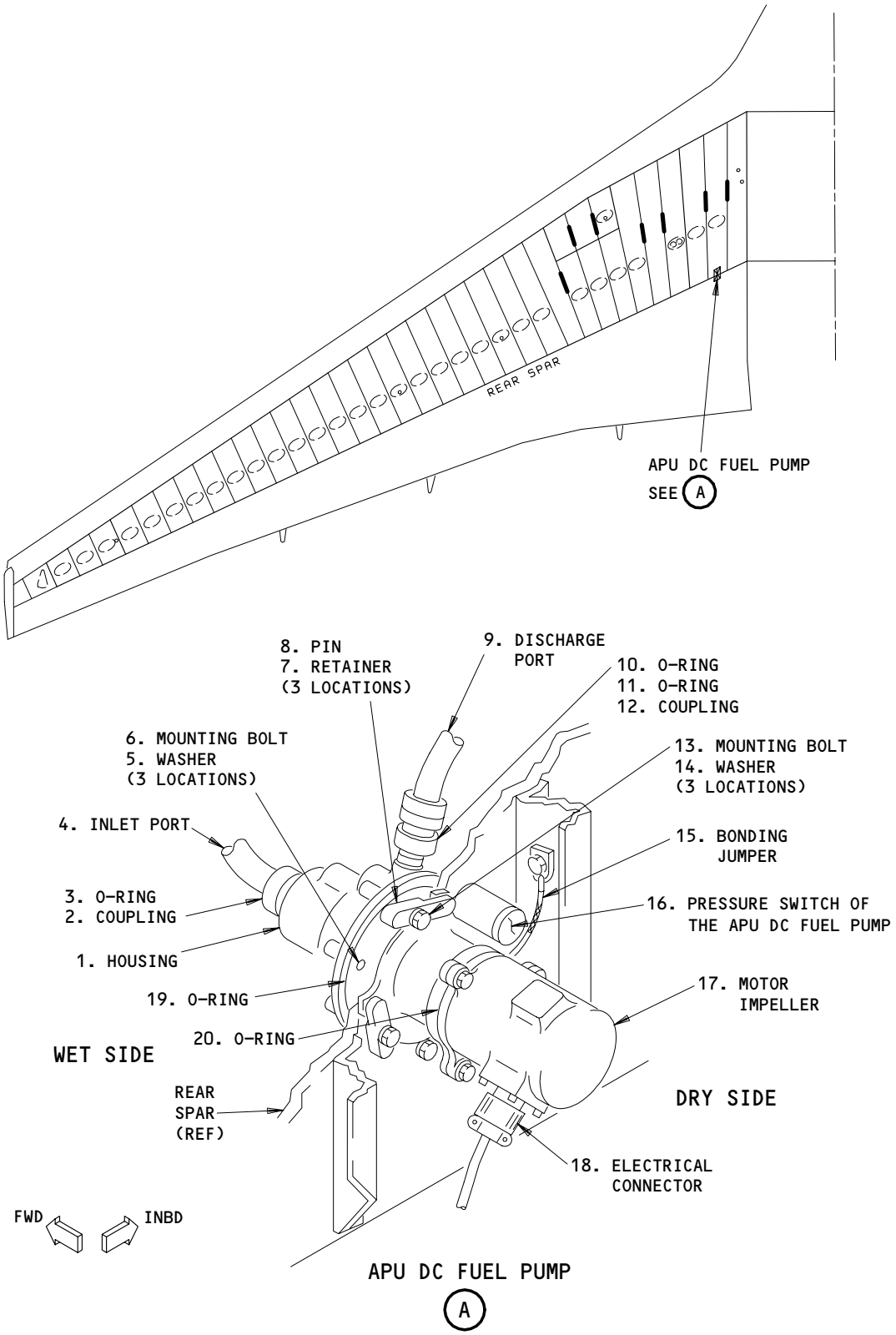

APU DC Fuel Pump Installation
Figure 401

BOEING PROPRIETARY - Copyright (C) - Unpublished Work - See title page for details.

S 034-024
(4) Remove the pressure switch (16) of the APU DC fuel pump (AMM 28-25-03/401).

S 034-025
(5) Remove the electrical connector (18) from the motor impeller (17).

S 034-026
(6) Disconnect the bonding jumper (15) from the motor impeller (17).

S 024-027
(7) Remove the mounting bolts (13), retainers (7), pins (8), and washers (14) from the motor impeller (17).

S 024-005
(8) Remove the motor impeller (17).

S 154-028
(9) Remove the sealant from the bolts (13).

TASK 28-25-01-404-029
3. Install the Motor Impeller of the APU DC Fuel Pump (Fig. 401)
A. Consumable Materials
(1) A00247 Chromate Type Sealant - BMS 5-95

B. References
(1) AMM 20-10-21/601, Electrical Bonding
(2) AMM 24-22-00/201, Electrical Power Control
(3) AMM 27-61-00/201, Spoiler/Speedbrake Control System
(4) AMM 28-25-03/401, APU Fuel Pump Pressure Switch
(5) AMM 32-00-15/201, Landing Gear Door Locks
(6) AMM 32-09-02/201, Air/Ground Relays
(7) AMM 51-31-01/201, Seals and Sealing
C. Access
(1) Location Zone
531 Center Auxiliary Tank (Left)

BOEING PROPRIETARY - Copyright (C) - Unpublished Work - See title page for details.

D. Procedure

S 434-052
(1) Install a new O-ring (20) in the motor impeller unit (17).

S 424-030
(2) Put the motor impeller (17) in position on the rear spar.

S 424-006
(3) Install the retainers (7), pins (8), washers (14) and mounting bolts (13) to attach the motor impeller (17) to the rear spar.

S 394-031
(4) Apply the chromate type sealant to the mounting bolts (13) (AMM 51-31-01/201).

S 434-032
(5) Connect the bonding jumper (15) to the motor impeller (17).

S 224-033
(6) Make sure the bonding resistance between the motor impeller (17) and the airplane structure is not more than 0.002 ohms (AMM 20-10-21/601).

S 434-034
(7) Install the pressure switch (16) of the APU DC fuel pump (AMM 28-25-03/401).

S 864-053
(8) Supply electrical power (AMM 24-22-00/201).

S 714-007
(9) Do this task: Operational Test - APU Fuel Feed System (AMM 28-25-00/501).
(a) Remove the DO-NOT-CLOSE tags and close these circuit breakers:
1) On the overhead circuit breaker panel, P11:
a) 11D34, FUEL DC PUMP PWR

BOEING PROPRIETARY - Copyright (C) - Unpublished Work - See title page for details.

b) 11D35, FUEL DC PUMP CONT

S 094-008

WARNING: USE THE PROCEDURE IN AMM 32-00-15/201 TO REMOVE THE DOOR LOCKS. THE DOORS OPEN AND CLOSE QUICKLY AND CAN CAUSE INJURY TO PERSONS OR DAMAGE TO EQUIPMENT.

(10) Remove the door locks from the landing gear doors and close the doors (AMM 32-00-15/201).

S 864-035

(11) Remove electrical power if it is not necessary (AMM 24-22-00/201).

TASK 28-25-01-004-036

4. Remove the Housing Unit of the APU DC Fuel Pump (Fig. 401)

A. References

(1) AMM 28-11-00/201, Fuel Tanks (Purging and Entry)

(2) AMM 28-11-02/401, Auxiliary Tank Access Doors

(3) AMM 28-26-00/201, Defueling

B. Access

(1) Location Zone

531 Center Auxiliary Tank (Left)

(2) Access Panel

531BB Auxiliary Tank Access Door (Left)

C. Procedure

S 654-009

(1) Defuel the auxiliary and left main fuel tanks (AMM 28-26-00/201).

S 654-010

(2) Drain and purge the auxiliary fuel tank (AMM 28-11-00/201).

S 034-037

(3) Remove the motor impeller per the Remove the Motor Impeller of the APU DC Fuel Pump procedure.

BOEING PROPRIETARY - Copyright (C) - Unpublished Work - See title page for details.

S 014-038
(4) Remove the left auxiliary tank access door, 531BB (AMM 28-11-02/401).

S 944-011

WARNING: OBEY THE FUEL TANK ENTRY PRECAUTIONS. FAILURE TO OBEY THE FUEL TANK ENTRY PRECAUTIONS COULD CAUSE INJURY TO PERSONS OR DAMAGE TO EQUIPMENT.

(5) Obey the fuel tank entry precautions (AMM 28-11-00/201).

S 014-012
(6) Go into the auxiliary fuel tank.

S 034-039
(7) Remove the coupling (2) from the inlet port (4) of the housing (1).

S 034-013
(8) Discard the O-ring (3).

S 034-040
(9) Remove the coupling (12) from the discharge port (9) of the housing (1).

S 034-014
(10) Discard the O-rings (10, 11).

S 154-015
(11) Remove the sealant from the mounting bolts (6).

S 024-041
(12) From out of the fuel tank, remove the mounting bolts (6) and washers (5).

BOEING PROPRIETARY - Copyright (C) - Unpublished Work - See title page for details.

S 024-042
(13) Remove the housing (1) from the fuel tank.

S 034-016
(14) Discard the O-ring (19).

TASK 28-25-01-404-017
5. Install the Housing of the APU DC Fuel Pump (Fig. 401)
A. Consumable Materials
(1) A00247 Chromate Type Sealant - BMS 5-95

B. References
(1) AMM 12-11-01/301, Fuel Tank Pressure Fueling
(2) AMM 20-10-21/601, Electrical Bonding
(3) AMM 28-11-00/201, Fuel Tanks (Purging and Entry)
(4) AMM 28-11-02/401, Auxiliary Tank Access Doors
(5) AMM 51-31-01/201, Seals and Sealing
C. Access
(1) Location Zone
531 Center Auxiliary Tank (Left)

(2) Access Panel
531BB Auxiliary Tank Access Door (Left)

D. Procedure

S 434-043
(1) Install a new O-ring (19) in the groove on the housing (1).

S 944-018

WARNING: OBEY THE FUEL TANK ENTRY PRECAUTIONS. FAILURE TO OBEY THE FUEL TANK ENTRY PRECAUTIONS COULD CAUSE INJURY TO PERSONS OR DAMAGE TO EQUIPMENT.

(2) Obey the fuel tank entry precautions (AMM 28-11-00/201).

BOEING PROPRIETARY - Copyright (C) - Unpublished Work - See title page for details.

S 014-019
(3) Go into the auxiliary fuel tank.

S 214-020
(4) Make sure the area on the rear spar that the housing (1) touches is clean.

S 424-044
(5) Put the housing (1) in position on the rear spar.

S 424-021
(6) From out of the fuel tank, install the mounting bolts (6) and the washers (5) that attach to the housing (1).

S 434-045
(7) With a new O-ring (3), connect the coupling (2) at the inlet port (4) of the housing (1).

S 434-046
(8) With new O-rings (10, 11), connect the coupling (12) at the discharge port (9) of the housing (1).

S 224-047
(9) Make sure the bonding resistance between the housing (1) and the airplane structure is not more than 0.002 ohms (AMM 20-10-21/601).

S 394-048
(10) Apply the chromate type sealant to the rear spar (front and aft faces) around the housing (1) and the mounting bolts (6) (AMM 51-31-01/201).

S 414-049
(11) Install the left auxiliary tank access door, 531BB (AMM 28-11-02/401).

BOEING PROPRIETARY - Copyright (C) - Unpublished Work - See title page for details.

S 434-050
(12) Install the motor impeller (17) per the Install the Motor Impeller of the APU DC Fuel Pump procedure.

S 654-051
(13) Refuel the fuel tanks if no more work is necessary (AMM 12-11-01/301).

S 214-022
(14) Make sure there are no fuel leaks at the APU DC fuel pump.

BOEING PROPRIETARY - Copyright (C) - Unpublished Work - See title page for details.

APU DC FUEL PUMP - INSPECTION/CHECK

1. General
   A. The APU DC fuel pump is installed on the rear spar of the left wing. The fuel pump has the motor impeller and housing. The housing is installed on the front face of the rear spar, in the auxiliary fuel tank.
   B. This procedure contains a functional check of the bonding resistance between the housing and the rear spar.

TASK 28-25-01-706-063

2. APU DC Fuel Pump - Bonding Resistance Check (Fig. 601)
   A. Equipment
      (1) Bonding Meter - Use one of these:
         (a) Bonding Meter - T477W
             Avtron Manufacturing Co.
             Cleveland, OH
         (b) Bonding Meter - Model M1
             (Serial Number A000012 and subsequent)
             BCD Electronics Ltd.
             Vancouver, Canada
   B. References
      (1) AMM 06-44-00/201, Wing Access Doors and Panels
      (2) AMM 28-11-00/201, Fuel Tanks
      (3) AMM 28-11-02/401, Center Auxiliary Tank Access Door
      (4) AMM 28-26-00/201, Defueling
      (5) SWPM 20-20-00, Electrical Bonding and Grounds
   C. Access
      (1) Location Zone
          531 Center Auxiliary Tank (Left)

      (2) Access Panel
          531BB Center Auxiliary Tank Access Door

   D. Prepare for Examination

      S 656-053
      (1) Defuel the auxiliary and left main fuel tanks (AMM 28-26-00/201).

BOEING PROPRIETARY - Copyright (C) - Unpublished Work - See title page for details.

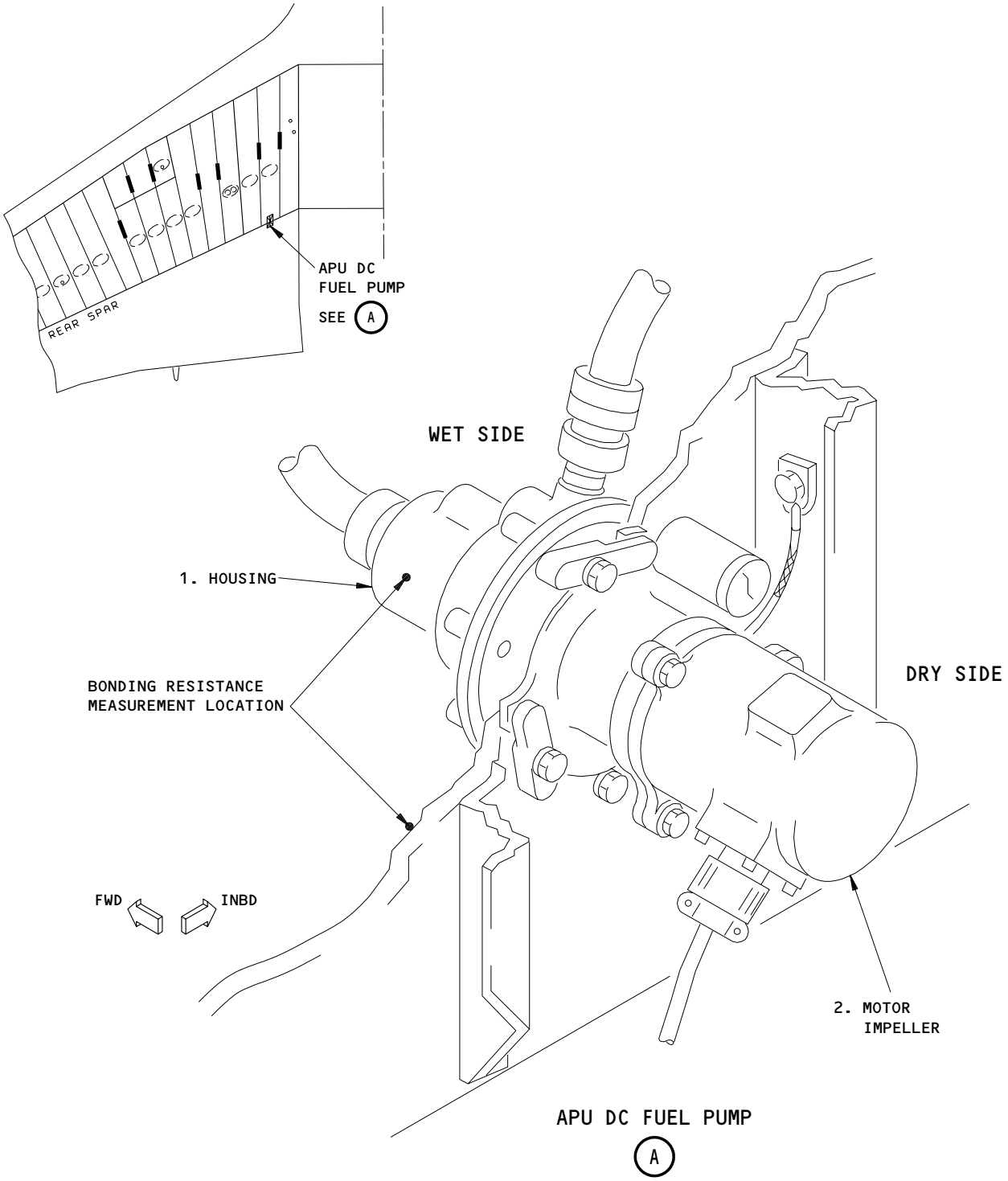

APU DC Fuel Pump Inspection
Figure 601

BOEING PROPRIETARY - Copyright (C) - Unpublished Work - See title page for details.

S 656-054
(2) Drain and purge the auxiliary fuel tank (AMM 28-11-00/201).

S 866-064
(3) Open these circuit breakers and attach DO-NOT-CLOSE tags:
(a) On the overhead circuit breaker panel, P11:
1) 11D34, FUEL DC PUMP PWR
2) 11D35, FUEL DC PUMP CONT

S 016-055
(4) Remove the left auxiliary tank access door, 531BB (AMM 28-11-02/401).

S 946-056

WARNING: OBEY THE FUEL TANK ENTRY PRECAUTIONS. FAILURE TO OBEY THE FUEL TANK ENTRY PRECAUTIONS COULD CAUSE INJURY TO PERSONS OR DAMAGE TO EQUIPMENT.

(5) Obey the fuel tank entry precautions (AMM 28-11-00/201).

E. Bonding Resistance Check

S 766-057
(1) Use a bonding meter to measure the bonding resistance between the housing (1) and the rear spar (SWPM 20-20-00).
(a) Make sure the electrical bonding resistance is 0.003 ohm (3 milliohms) or less.

F. Put the Airplane Back to Its Usual Condition

S 866-065
(1) Remove the DO-NOT-CLOSE tags and close these circuit breakers:
(a) On the overhead circuit breaker panel, P11:
1) 11D34, FUEL DC PUMP PWR
2) 11D35, FUEL DC PUMP CONT

BOEING PROPRIETARY - Copyright (C) - Unpublished Work - See title page for details.

S 416-058

(2) Install the left auxiliary tank access door, 531BB (AMM 28-11-02/401).

BOEING PROPRIETARY - Copyright (C) - Unpublished Work - See title page for details.

APU FUEL SHUTOFF VALVE - REMOVAL/INSTALLATION

1. General
   A. The APU shutoff valve is installed on the rear spar of the left wing between rib 1 and rib 2. The APU shutoff valve contains a valve body and an actuator. The valve body is installed on the rear spar in the auxiliary fuel tank. The actuator is installed on the rear spar out of the auxiliary fuel tank.
   B. This procedure contains four tasks. The first task removes the actuator of the APU shutoff valve. The second task installs the actuator of the APU shutoff valve. The third task removes the valve body of the APU shutoff valve. The fourth task installs the valve body of the APU shutoff valve.

TASK 28-25-02-004-032

2. Remove the Actuator of the APU Shutoff Valve (Fig. 401)
   A. References
      (1) AMM 32-00-15/201, Landing Gear Door Locks
      (2) AMM 32-00-20/201, Landing Gear Downlocks
   B. Access
      (1) Location Zone
          531 Center Auxiliary Tank (Left)

   C. Procedure

      S 214-033
      (1) Make sure the downlocks are installed on the nose and main landing gear (AMM 32-00-20/201).

      S 494-034

      WARNING: USE THE PROCEDURE IN AMM 32-00-15/201 TO INSTALL THE DOOR LOCKS. THE DOORS OPEN AND CLOSE QUICKLY AND CAN CAUSE INJURY TO PERSONS OR DAMAGE TO EQUIPMENT.

      (2) Open the doors for the landing gear and install the door locks (AMM 32-00-15/201).

      S 864-001
      (3) Open these circuit breakers and attach DO-NOT-CLOSE tags:
          (a) On the main power distribution panel, P6:
              1) 6E3, FUEL VALVES APU
          (b) On the overhead circuit breaker panel, P11:
              1) 11B35, APU ALTN CONT

      S 864-003
      (4) Put the manual override handle (9) of the actuator (4) in the CLOSED position.

BOEING PROPRIETARY - Copyright (C) - Unpublished Work - See title page for details.

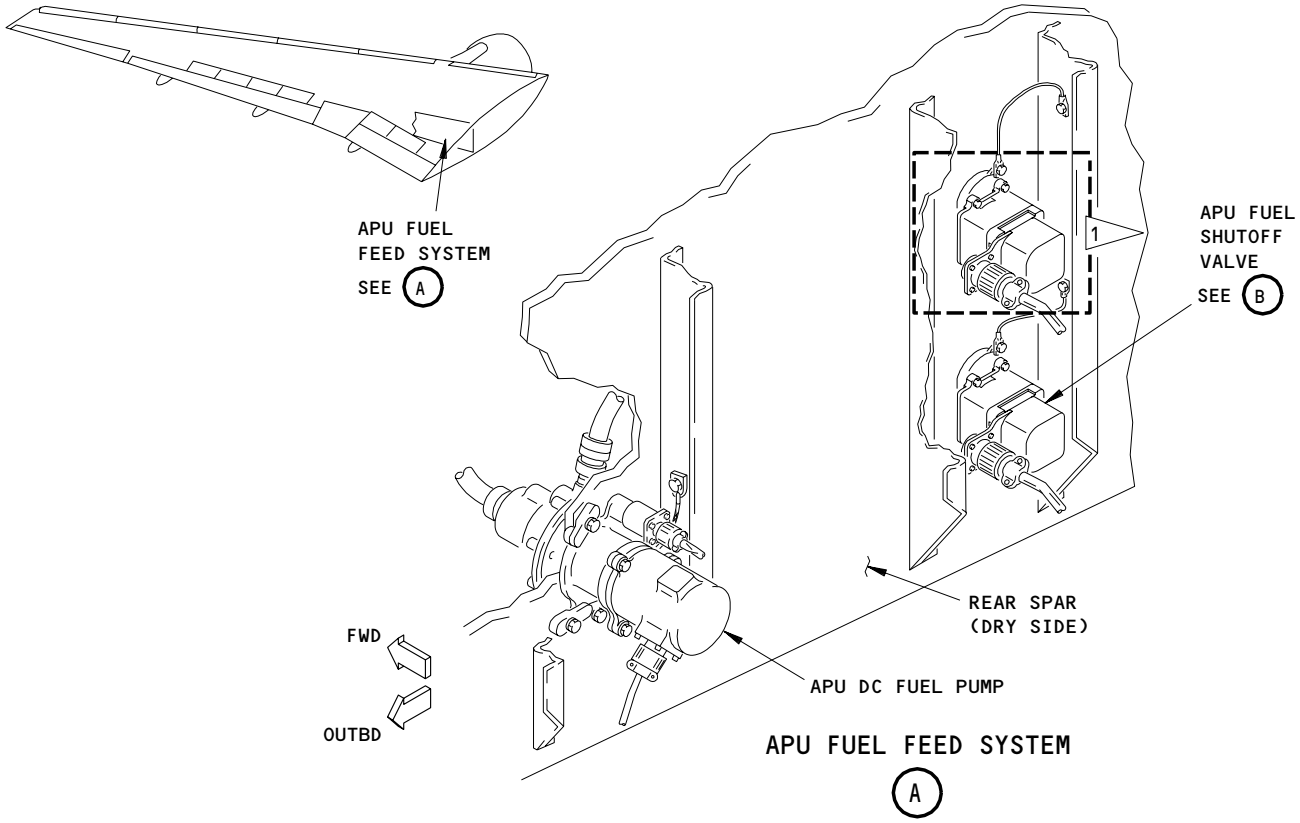

APU FUEL FEED SYSTEM

A

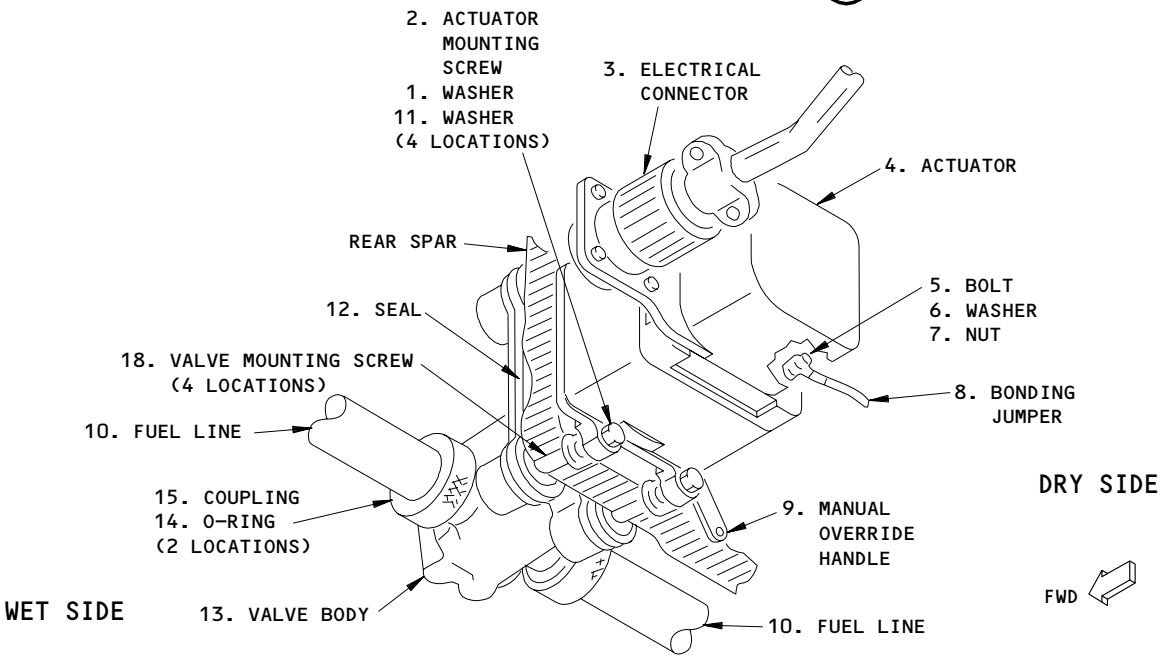

APU SHUTOFF VALVE

B

1 IF INSTALLED

APU Shutoff Valve Installation
Figure 401 (Sheet 1)

BOEING PROPRIETARY - Copyright (C) - Unpublished Work - See title page for details.

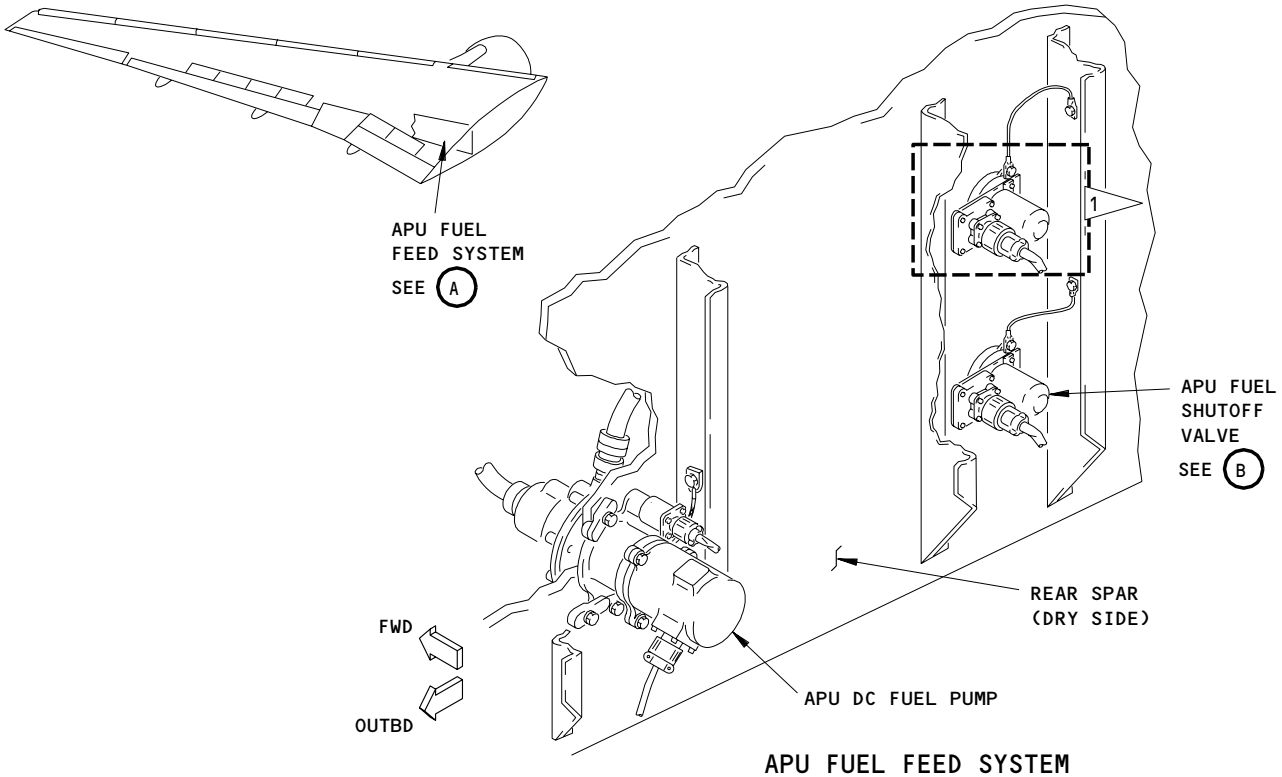

APU FUEL FEED SYSTEM

A

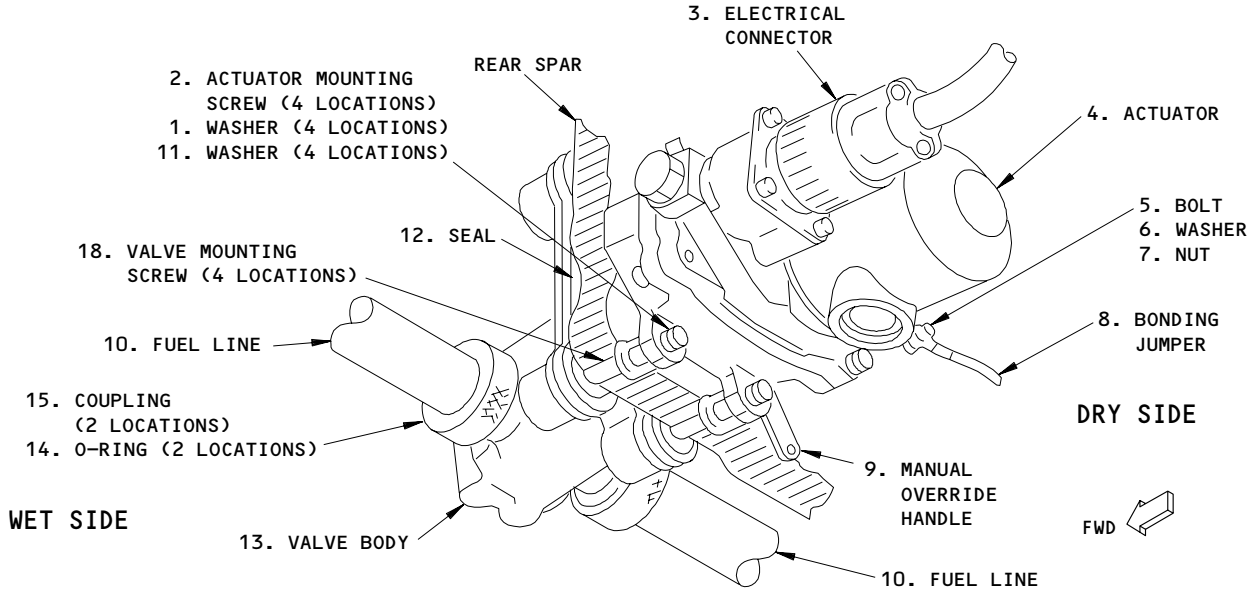

APU SHUTOFF VALVE

B

1 IF INSTALLED

APU Shutoff Valve Installation
Figure 401 (Sheet 2)

EFFECTIVITY
AIRPLANES WITHOUT ACTUATOR MA20A2027 OR MA30A1001

L13950

BOEING PROPRIETARY - Copyright (C) - Unpublished Work - See title page for details.

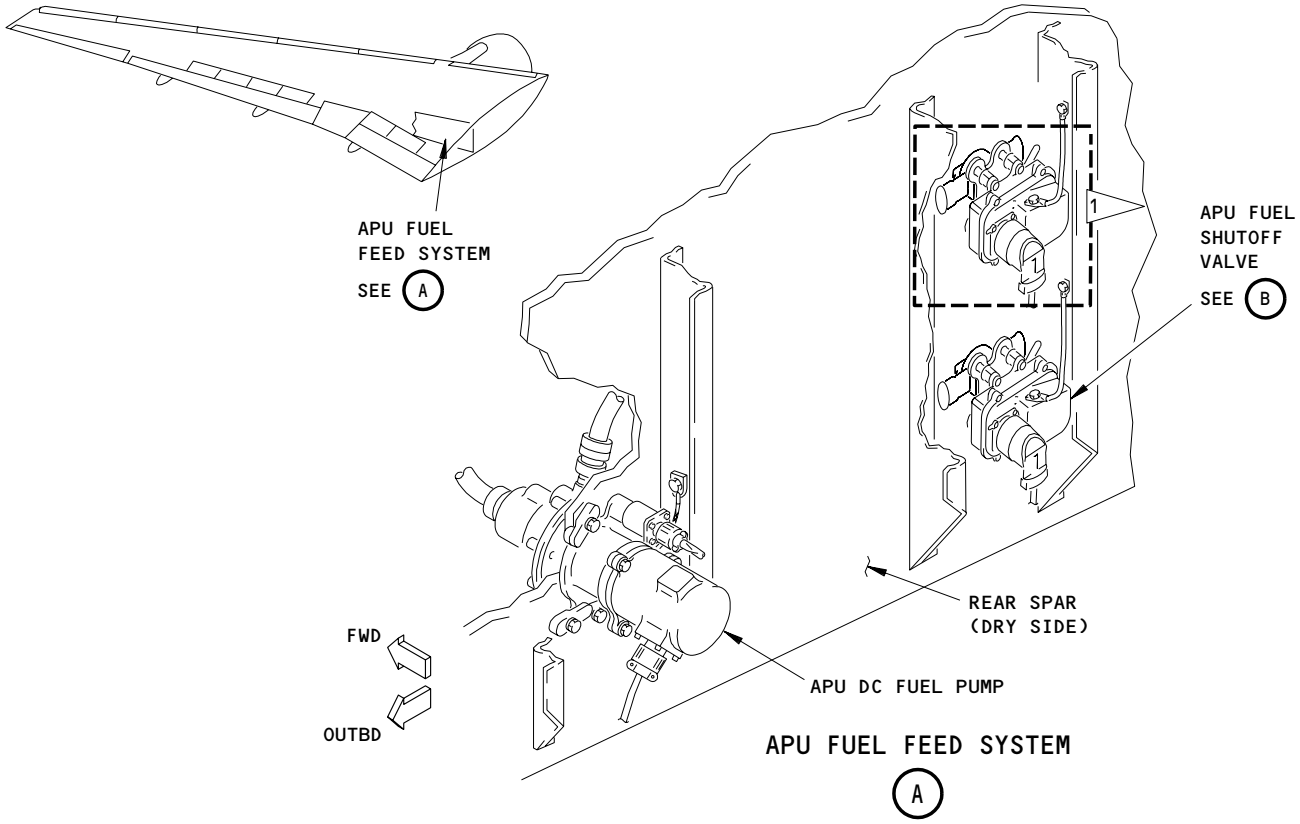

APU FUEL FEED SYSTEM

A

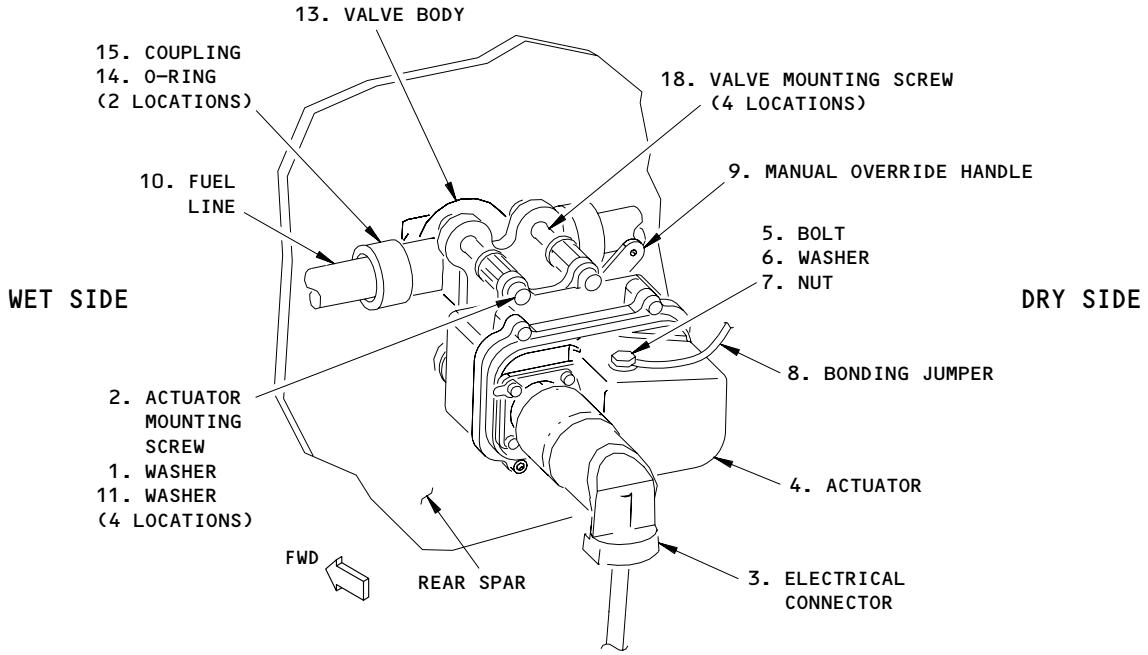

APU SHUTOFF VALVE

B

1 IF INSTALLED

APU Shutoff Valve Installation
Figure 401 (Sheet 3)

BOEING PROPRIETARY - Copyright (C) - Unpublished Work - See title page for details.

S 034-004
(5) Disconnect the electrical connector (3) from the actuator (4).

S 034-005
(6) Remove the bolt (5), washer (6) and nut (7) to disconnect the bonding jumper (8) from the actuator (4).

S 034-006
(7) Remove the actuator mounting screws (2) and the washers (1, 11).

S 024-007
(8) Disengage the splined shaft of the actuator (4) from the shaft of the valve body (13).

S 024-035
(9) Remove the actuator (4).

TASK 28-25-02-404-008
3. Install the Actuator of APU Shutoff Valve (Fig. 401)

A. References
(1) AMM 20-30-88/201, Airplane Structure Cleaning Solvents (Series 88)
(2) AMM 20-30-92/201, Airplane Structure Cleaning Solvents (Series 92)
(3) AMM 24-22-00/201, Electrical Power Control
(4) AMM 28-11-00/701, Fuel Tanks
(5) AMM 28-25-00/501, APU Fuel Feed System
(6) AMM 32-00-15/201, Landing Gear Door Locks
(7) SWPM 20-20-00, Electrical Bonds and Grounds

B. Equipment
(1) Brush - Soft Bristle
(2) BAC5000 - Sealant Removal Tool

C. Consumable Materials
(1) C00064 Coating - Chemical Conversion Coating for Aluminum or Aluminum Alloys, MIL-C-5541 (MIL-C-81706) - Alodine 600 and 1200

BOEING PROPRIETARY - Copyright (C) - Unpublished Work - See title page for details.

(2) G00034 Cotton Wiper, Process Cleaning Absorbent Wiper (cheesecloth, gauze) BMS 15-5
(3) C00307 BMS 10-20, Type II Class A - Finish, Corrosion Resistant
(4) G50021 - Scotch-Brite 96W pad
(5) Sealant, BMS 5-45 Class C
(6) Sealant, BMS 5-95 Class B or C
(7) Sealant, BMS 5-142
(8) B01008 Solvent - Series 88
(9) B01012 Solvent - Series 92

D. Access
(1) Location Zone
531 Center Auxiliary Tank (Left)

E. AIRPLANES WITHOUT ACTUATOR MA20A2027 OR MA30A1001;
Install the Actuator of the Engine Fuel Shutoff Valve

S 824-009
(1) Align the splined shaft of the actuator (4) with the shaft of the valve body (13).

S 424-036
(2) Install the actuator (4).

S 224-037
(3) Make sure there is a minimum clearance of 0.020 inch between the manual override handle (9) and the rear spar.
(a) Install washers if it is necessary to get the minimum clearance.

S 434-010
(4) Install the actuator mounting screws (2) and the washers (1, 11).

S 434-011
(5) Install the lockwire on the actuator mounting screws (2).
(a) Attach the bonding jumper (8) to the actuator (4) with the bolt (5), washer (6), and nut (7).
(b) Measure the bonding resistance between the valve actuator bonding lug and the airplane structure (SWPM 20-20-00).
1) Make sure the resistance is 0.005 ohm (5 milliohms) or less.

S 434-014
(6) Connect the electrical connector (3) to the actuator (4).

S 864-015
(7) Remove the DO-NOT-CLOSE tags and close these circuit breakers:
(a) On the overhead circuit breaker panel, P11:
1) 11B35, APU ALTN CONT
(b) On the main power distribution panel, P6:
1) 6E3, FUEL VALVES APU

BOEING PROPRIETARY - Copyright (C) - Unpublished Work - See title page for details.

S 714-017

(8) Do the operational test of the APU fuel feed system (AMM 28-25-00/501) to do a test of the actuator operation.

S 094-038

WARNING: USE THE PROCEDURE IN AMM 32-00-15/201 TO INSTALL THE DOOR LOCKS. THE DOORS OPEN AND CLOSE QUICKLY AND CAN CAUSE INJURY TO PERSONS OR DAMAGE TO EQUIPMENT.

(9) Remove the door locks from the landing gear doors and close the doors (AMM 32-00-15/201).

S 864-018

(10) Remove electrical power if it is not necessary (AMM 24-22-00/201).

F. AIRPLANES WITH ACTUATOR MA20A2027 OR MA30A1001;
Install the Actuator of the Engine Fuel Shutoff Valve

S 144-051

(1) Remove the old sealant and clean the actuator (4) and fasteners (if reused).

(a) Use the sealant removal tool and sealant removal tool handle (or equivalent) to remove old sealant from the actuator (4).

WARNING: DO NOT GET SOLVENTS IN YOUR MOUTH, YOUR EYES, OR ON YOUR SKIN. DO NOT BREATHE THE FUMES FROM SOLVENTS. SOLVENTS ARE DANGEROUS MATERIALS. SOLVENTS CAN BE FLAMMABLE. OBEY THE MATERIAL SAFETY DATA SHEETS (MSDS) FOR SOLVENTS. OBEY LOCAL REGULATIONS FOR THE CORRECT PROCEDURES TO USE OR DISCARD SOLVENTS. SOLVENTS CAN CAUSE INJURIES TO PERSONNEL AND DAMAGE TO EQUIPMENT.

(b) To remove the remaining sealant, grease, oil, dirt, and other contamination from the componenets, use one of these items soaked with Series 92 solvent (AMM 20-30-92/201).

1) soft bristle brush

BOEING PROPRIETARY - Copyright (C) - Unpublished Work - See title page for details.

2) cotton wiper
3) Scotch-Brite 96W pad

S 424-052

(2) Do these steps to prepare the actuator (4) for a sealed electrical faying surface bond (SWPM 20-20-00):

WARNING: DO NOT GET SOLVENTS IN YOUR MOUTH, YOUR EYES, OR ON YOUR SKIN. DO NOT BREATHE THE FUMES FROM SOLVENTS. SOLVENTS ARE DANGEROUS MATERIALS. SOLVENTS CAN BE FLAMMABLE. OBEY THE MATERIAL SAFETY DATA SHEETS (MSDS) FOR SOLVENTS. OBEY LOCAL REGULATIONS FOR THE CORRECT PROCEDURES TO USE OR DISCARD SOLVENTS. SOLVENTS CAN CAUSE INJURIES TO PERSONS AND DAMAGE TO EQUIPMENT.

(a) Final clean the actuator feet surfaces with a cotton wiper soaked with Series 88 solvent (AMM 20-30-88/201).
(b) Rub dry with a clean, dry cotton wiper.
(c) Continue to clean and dry the surface until the dry cotton wiper stays clean.
(d) Apply a thin continuous layer of sealant to the actuator contact areas (four locations).

NOTE: CDCCL - Refer to the task: Airworthiness Limitation Precautions (AMM 28-00-00/201), for important information on Critical Design Configuration Control Limitations (CDCCLs).

NOTE: This is applicable to Airworthiness Limitation 28-AWL-23.

1) Use BMS 5-45 Class C or BMS 5-95 Class B or C sealant for the faying surface seal.
2) Make sure the sealant layer is approximately 0.005 inch (0.127 mm) thick.

BOEING PROPRIETARY - Copyright (C) - Unpublished Work - See title page for details.

(e) Apply sealant to the shank and the threads of the actuator mounting screws (2).

NOTE: CDCCL - Refer to the task: Airworthiness Limitation Precautions (AMM 28-00-00/201), for important information on Critical Design Configuration Control Limitations (CDCCLs).

NOTE: This is applicable to Airworthiness Limitation 28-AWL-23.

1) Use BMS 5-45 Class C or BMS 5-95 Class B or C sealant for the wet installation of the actuator mounting screws (2).

NOTE: Use the same sealant on the mounting screws (2) that was used for the faying surface seal.

2) Make sure the sealant applied to the fasteners is approximately 0.060 inch (1.52 mm) thick.

S 424-053

(3) Do these steps to install the actuator (4).

(a) Make sure the manual override handle is in the CLOSED position.
(b) Align the splined shaft with the adapter shaft.
(c) Make sure the two spaces for teeth on the adapter shaft align with the splined shaft.
(d) Put the splined shaft into the actuator shaft.

NOTE: The contact areas of the actuator automatically align with the mounting points on the index plate.

(e) Install the actuator mounting screws (2) and washers (1, 11)

NOTE: Lockwire is not necessary for the mounting screws (1).

(f) Tighten the actuator mounting screws (2) to 20 in-lb (2.3 Nm).
(g) Make sure the sealant is continuously squeezed out along the edges of the contact surfaces.
(h) If there are gaps, bubbles or voids in the sealant squeeze out, then disassemble and apply more sealant.
(i) Shape the squeezed out sealant into a fillet seal.
(j) As an option, remove the extra squeezed out sealant.

NOTE: Make sure the sealant that remains is flush with the mating part edges.

BOEING PROPRIETARY - Copyright (C) - Unpublished Work - See title page for details.

S 764-054

(4) Measure the electrical bonding resistance between the upper housing of the actuator (at the bare metal bonding jumper installation location) and the rear spar (SWPM 20-20-00).
   (a) Do this measurement with the bonding jumper (8) and the electrical connector disconnected.
   (b) Make sure the bonding jumper (8) does not touch the actuator (4) during the bonding measurement.
   (c) Make sure the bonding resistance is 0.0025 ohm (2.5 milliohms) or less.

   NOTE: CDCCL - Refer to the task: Airworthiness Limitation Precautions (AMM 28-00-00/201), for important information on Critical Design Configuration Control Limitations (CDCCLs).

   NOTE: This is applicable to Airworthiness Limitation 28-AWL-23.

S 764-055

(5) Measure the electrical bonding resistance between the loose end of the bonding jumper (8) and the rear spar (SWPM 20-20-00).
   (a) Make sure the bonding resistance is 0.0015 ohm (1.5 milliohms) or less.

   NOTE: CDCCL - Refer to the task: Airworthiness Limitation Precautions (AMM 28-00-00/201), for important information on Critical Design Configuration Control Limitations (CDCCLs).

   NOTE: This is applicable to Airworthiness Limitation 28-AWL-23.

S 424-056

(6) Do these steps to install the bonding jumper (8) to the actuator (4):
   (a) Final clean the contact surfaces with a cotton wiper soaked with Series 88 solvent (AMM 20-30-88/201).
      1) Rub dry with a clean, dry cotton wiper.
      2) Continue to clean and dry the surface until the dry cotton wiper stays clean.
   (b) Apply a thin continuous layer of sealant to both surfaces of the bonding jumper (8) and the washer (6).
      1) Use BMS 5-142 sealant for the faying surface seal.
      2) Make sure the sealant layer is approximately 0.005 inch (0.127 mm) thick.
   (c) Install the bolt (5), washer (6), and nut (7) to attach the bonding jumper (8) to the actuator (4).

BOEING PROPRIETARY - Copyright (C) - Unpublished Work - See title page for details.

(d) AIRPLANES WITHOUT ACTUATOR MA30A1001;
Tighten the bolt (5) to 20 in-lb (2.3 Nm).
(e) AIRPLANES WITH ACTUATOR MA30A1001;
Tighten the bolt (5) to 35 in-lb (4.0 Nm).
(f) Measure the electrical bonding resistance between the upper housing of the actuator (4) and the attached bonding jumper (8) terminal (SWPM 20-20-00).
1) Do not touch the bolt (5) when you make the bonding measurement.
2) Make sure the bonding resistance is 0.001 ohm (1 milliohm) or less.

NOTE: CDCCL - Refer to the task: Airworthiness Limitation Precautions (AMM 28-00-00/201), for important information on Critical Design Configuration Control Limitations (CDCCLs).

NOTE: This is applicable to Airworthiness Limitation 28-AWL-23.

(g) Apply a cap seal of BMS 5-142 sealant over the terminal of the bonding jumper (8) and bolt (5).

S 914-057
(7) Do this task to apply protective finishes to the bare areas of the rear spar: Apply the Corrosion Resistant Finish (Topcoat) (AMM 28-11-00/701).

NOTE: Re-apply the protective finishes to the rear spar where the electrical bonding probes removed the finishes.

S 434-058
(8) Connect the electrical connector (3) to the actuator (4).

S 864-059
(9) Remove the DO-NOT-CLOSE tags and close these circuit breakers:
(a) On the overhead circuit breaker panel, P11:
1) 11B35, APU ALTN CONT
(b) On the main power distribution panel, P6:
1) 6E3, FUEL VALVES APU

S 714-060
(10) Do the operational test of the APU fuel feed system (AMM 28-25-00/501) to do a test of the actuator operation.

BOEING PROPRIETARY - Copyright (C) - Unpublished Work - See title page for details.

S 094-061

WARNING: USE THE PROCEDURE IN AMM 32-00-15/201 TO INSTALL THE DOOR LOCKS. THE DOORS OPEN AND CLOSE QUICKLY AND CAN CAUSE INJURY TO PERSONS OR DAMAGE TO EQUIPMENT.

(11) Remove the door locks from the landing gear doors and close the doors (AMM 32-00-15/201).

S 864-062

(12) Remove electrical power if it is not necessary (AMM 24-22-00/201).

TASK 28-25-02-004-019

4. Remove the Valve Body of the APU Shutoff Valve (Fig. 401)

A. References

(1) AMM 28-11-00/201, Fuel Tanks (Purging and Entry)
(2) AMM 28-11-02/401, Auxiliary Tank Access Doors
(3) AMM 28-26-00/201, Defueling

B. Access

(1) Location Zone
531 Center Auxiliary Tank (Left)

(2) Access Panel
531BB Auxiliary Tank Access Door (Left)

C. Procedure

S 654-039

(1) Defuel the main and auxiliary fuel tanks (AMM 28-26-00/201).

S 654-040

(2) Drain and purge the main and auxiliary fuel tanks (AMM 28-11-00/201).

S 034-020

(3) Remove the actuator (4) per the Remove the Actuator of the APU Shutoff Valve procedure.

S 014-021

(4) Remove the left auxiliary tank access door, 531BB (AMM 28-11-02/401).

S 944-041

WARNING: OBEY THE FUEL TANK ENTRY PRECAUTIONS. FAILURE TO OBEY THE FUEL TANK ENTRY PRECAUTIONS COULD CAUSE INJURY TO PERSONS OR DAMAGE TO EQUIPMENT.

(5) Obey the fuel tank entry precautions (AMM 28-11-00/201).

BOEING PROPRIETARY - Copyright (C) - Unpublished Work - See title page for details.

S 014-042
(6) Go into the auxiliary fuel tank.

S 034-022
(7) Disconnect the couplings (15) from the valve body (13).

S 034-043
(8) Discard the O-rings (14).

S 034-023
(9) Remove the valve mounting screws (18).

S 024-024
(10) Remove the valve body (13) from the fuel tank.

S 034-044
(11) Discard the seal (12).

TASK 28-25-02-404-025
5. Install the Valve Body of the APU Shutoff Valve (Fig. 401)
A. Consumable Materials
(1) A00247 Chromate Type Sealant - BMS 5-95, Class B-1/2

B. References
(1) AMM 12-11-01/301, Fuel Tank Pressure Fueling
(2) AMM 28-11-00/201, Fuel Tanks (Purging and Entry)
(3) AMM 28-11-02/401, Auxiliary Tank Access Doors
(4) AMM 51-31-01/201, Seals and Sealing
C. Access
(1) Location Zone
531 Center Auxiliary Tank (Left)

(2) Access Panel
531BB Auxiliary Tank Access Door (Left)

D. Procedure

S 944-045

WARNING: OBEY THE FUEL TANK ENTRY PRECAUTIONS. FAILURE TO OBEY THE FUEL TANK ENTRY PRECAUTIONS COULD CAUSE INJURY TO PERSONS OR DAMAGE TO EQUIPMENT.

(1) Obey the fuel tank entry precautions (AMM 28-11-00/201).

S 424-026
(2) With a new seal (12), put the valve body (13) on the rear spar.

BOEING PROPRIETARY - Copyright (C) - Unpublished Work - See title page for details.

S 434-027
(3) Install the valve mounting screws (18) through the rear spar that attach to the valve body (13).

S 394-028
(4) Apply the chromate type sealant where the valve mounting screw (18) touches the rear spar (AMM 51-31-01/201).

S 434-029
(5) With new O-rings (14), connect the couplings (15) to the valve body (13).

S 414-030
(6) Install the left auxiliary tank access door, 531BB (AMM 28-11-02/401).

S 434-031
(7) Install the actuator (4) per the Install the Actuator of the APU Shutoff Valve procedure.

S 654-046
(8) Refuel the fuel tanks if no more work is necessary (AMM 12-11-01/301).

BOEING PROPRIETARY - Copyright (C) - Unpublished Work - See title page for details.

APU FUEL SHUTOFF VALVE - INSPECTION/CHECK

1. General
   A. The APU shutoff valve is installed on the rear spar of the left wing between rib 1 and rib 2. The APU shutoff valve contains a valve body and an actuator (1), which is installed on the rear spar, outside of the auxiliary fuel tank.
   B. This procedure contains a functional check of the bonding resistance between the actuator (1) and the rear spar.

TASK 28-25-02-706-055

2. APU Fuel Shutoff Valve - Bonding Resistance Check (Fig. 601)
   A. Equipment
      (1) Bonding Meter - Use one of these:
         (a) Bonding Meter - T477W
             Avtron Manufacturing Co.
             Cleveland, OH
         (b) Bonding Meter - Model M1
             (Serial Number A000012 and subsequent)
             BCD Electronics Ltd.
             Vancouver, Canada
   B. Consumable Materials
      (1) G00034 Cotton Wiper, Process Cleaning Absorbent Wiper (Cheesecloth, gauze) BMS 15-5
      (2) Sealant, BMS 5-142
      (3) B01008 Solvent - Series 88
   C. References
      (1) AMM 20-30-88/201, Airplane Structure Cleaning Solvent (Series 88)
      (2) AMM 32-00-15/201, Landing Gear Door Locks
      (3) AMM 32-00-20/201, Landing Gear Downlocks
      (4) SWPM 20-20-00, Electrical Bonds and Grounds
   D. Access
      (1) Location Zone
          551 Rear Spar to MLG Support Beam

   E. Prepare for Examination

      S 486-056

      WARNING: MAKE SURE THAT THE DOWNLOCKS ARE INSTALLED IN ALL OF THE LANDING GEAR. WITHOUT THE DOWNLOCKS, THE LANDING GEAR CAN RETRACT AND CAUSE INJURIES TO PERSONS AND DAMAGE TO EQUIPMENT.

      (1) Make sure the downlocks are installed in the nose and main landing gear (AMM 32-00-20/201).

BOEING PROPRIETARY - Copyright (C) - Unpublished Work - See title page for details.

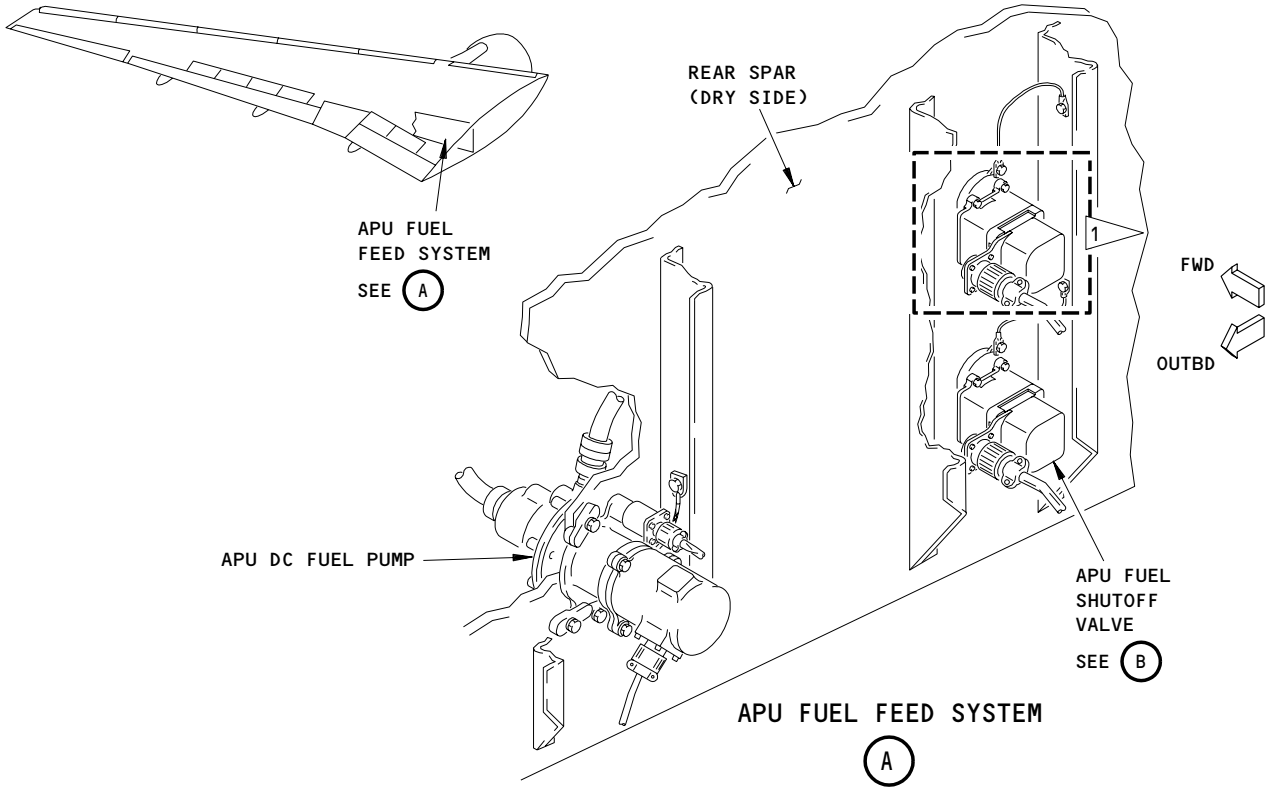

APU FUEL FEED SYSTEM

A

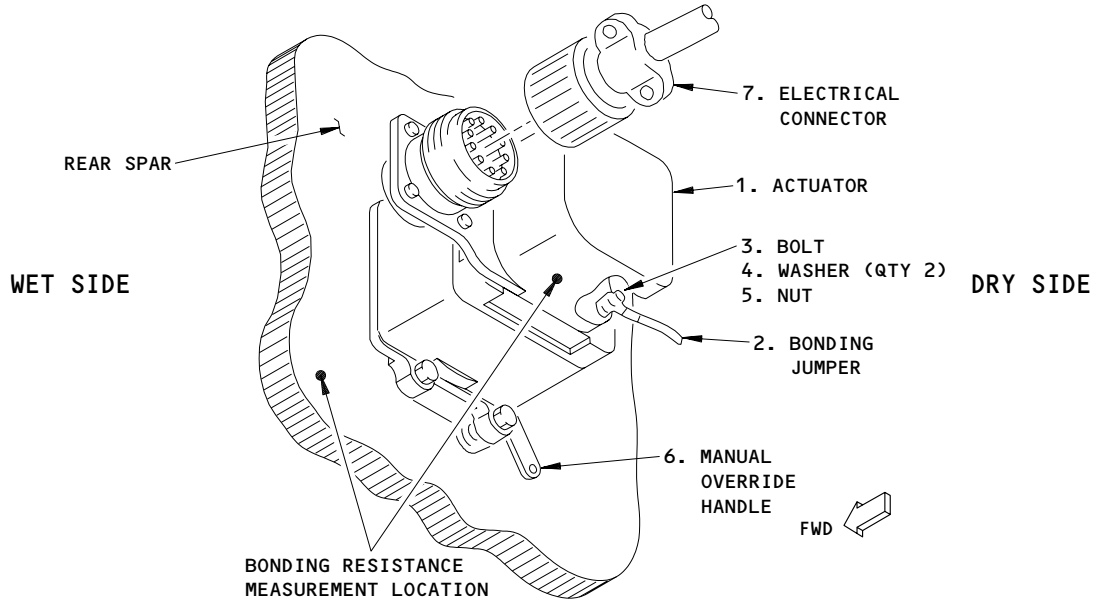

APU FUEL SHUTOFF VALVE
(EXAMPLE)

B

1 IF INSTALLED

APU Fuel Shutoff Valve Inspection
Figure 601

BOEING PROPRIETARY - Copyright (C) - Unpublished Work - See title page for details.

S 486-057

WARNING: OBEY THE INSTALLATION PROCEDURE FOR THE DOOR LOCKS. THE DOORS OPEN AND CLOSE QUICKLY. THE MOVEMENT OF THE DOORS CAN CAUSE INJURIES TO PERSONS AND DAMAGE TO EQUIPMENT.

(2) Open the doors for the landing gear and install the door locks (AMM 32-00-15/201).

S 866-061

(3) Open this circuit breakers and attach DO-NOT-CLOSE tags:
(a) On the main power distribution panel, P6:
1) 6E3, APU FUEL VALVES

S 026-062

(4) Disconnect the electrical connector (7) from the actuator (1).

F. AIRPLANES WITHOUT ACTUATOR MA20A2027 OR MA30A1001;
Bonding Resistance Check

S 026-063

(1) Remove the bolt (3), washer (4), and nut (5) to disconnect the bonding jumper (2) from the actuator (1).

S 766-058

(2) Use a bonding meter to measure the bonding resistance between the actuator (1) and the rear spar (SWPM 20-20-00).
(a) Make sure the resistance is 5 milliohms (0.005 ohm) or less.

S 426-064

(3) Install the bolt (3), washers (4), and nut (5) to connect the bonding jumper (2) to the actuator (1).

G. AIRPLANES WITH ACTUATOR MA20A2027 OR MA30A1001;
Bonding Resistance Check

S 026-065

(1) Remove the bolt (3), washer (4), and nut (5) to disconnect the bonding jumper (2) from the actuator (1).

S 766-066

(2) Use a bonding meter to measure the bonding resistance between the actuator (1) and the rear spar (SWPM 20-20-00).
(a) Make sure the resistance is 5 milliohms (0.005 ohm) or less.

BOEING PROPRIETARY - Copyright (C) - Unpublished Work - See title page for details.

S 426-067

(3) Do these steps to install the bonding jumper (2) to the actuator (1):

(a) Clean the contact surfaces with a cotton wiper soaked with Series 88 solvent (AMM 20-30-88/201).

1) Clean and dry the surface until the cotton wiper stays clean.

(b) Apply a thin continuous layer of sealant to both surfaces of the bonding jumper (2) and the washers (4).

1) Use BMS 5-142 sealant for the faying surface seal.

(c) Install the bolt (3), washers (4), and nut (5) to attach the bonding jumper (2) to the actuator (1).

1) AIRPLANES WITHOUT ACTUATOR MA30A1001;
Tighten the bolt (3) to 20 in-lb (2.3 Nm).

2) AIRPLANES WITH ACTUATOR MA30A1001;
Tighten the bolt (3) to 35 in-lb (4.0 Nm).

(d) Measure the electical bonding resistance between the upper housing of the actuator (1) and the attached bonding jumper (2) terminal (SWPM 20-20-00).

1) Do not touch the bolt (3) when you make the bonding measurement.

2) Make sure the bonding resistance is 0.001 ohm (1 milliohm) or less.

NOTE: CDCCL - Refer to the task: Airworthiness Limitation Precautions (AMM 28-00-00/201), for important information on Critical Design Configuration Control Limitations (CDCCLs).

NOTE: This is applicable to Airworthiness Limitation 28-AWL-23.

(e) Apply a cap seal of BMS 5-142 selant over the terminal of the bonding jumper (2) and the bolt (3).

H. Put the Airplane Back to Its Usual Condition.

S 426-068

(1) Connect the electrical connector (7) to the actuator (1).

S 866-069

(2) Remove the DO-NOT-CLOSE tags and close this circuit breaker:

(a) On the main power distribution panel, P6:

1) 6E3, APU FUEL VALVE

BOEING PROPRIETARY - Copyright (C) - Unpublished Work - See title page for details.

S 086-059

WARNING: OBEY THE REMOVAL PRECEDURE FOR THE DOOR LOCKS. THE DOORS OPEN AND CLOSE QUICKLY. THE MOVEMENT OF THE DOORS CAN CAUSE INJURIES TO PERSONS AND DAMAGE TO EQUIPMENT.

(3) Remove the door locks from the landing gear doors and close the doors (AMM 32-00-15/201).

S 086-060

(4) When the maintenance and servicing of the airplane is complete, remove the downlocks from the landing gear (AMM 32-00-20/201).

BOEING PROPRIETARY - Copyright (C) - Unpublished Work - See title page for details.

APU FUEL PUMP PRESSURE SWITCH - REMOVAL/INSTALLATION

1. General
   A. The pressure switch of the APU DC fuel pump is installed on the aft face of the rear spar. Access to the pressure switch is through the left wheel well.
   B. This procedure contains two tasks. The first task removes the pressure switch of the APU DC fuel pump. The second task installs the pressure switch of the APU DC fuel pump.
   C. If pressure switch, P/N 60B92400-10, is installed at the APU boost pump location, an adapter, P/N 346T0042-3, and additional O-ring must be installed.

TASK 28-25-03-004-001

2. Remove the Pressure Switch of the APU DC Fuel Pump (Fig. 401)
   A. References
      (1) AMM 32-00-15/201, Landing Gear Door Locks
      (2) AMM 32-00-20/201, Landing Gear Downlocks
   B. Access
      (1) Location Zone
          531 Center Auxiliary Tank (Left)

   C. Procedure

      S 214-009
      (1) Make sure the downlocks are installed on the nose and main landing gear (AMM 32-00-20/201).

      S 494-010

      WARNING: USE THE PROCEDURE IN AMM 32-00-15/201 TO INSTALL THE DOOR LOCKS. THE DOORS OPEN AND CLOSE QUICKLY AND CAN CAUSE INJURY TO PERSONS OR DAMAGE TO EQUIPMENT.

      (2) Open the doors for the landing gear and install the door locks (AMM 32-00-15/201).

      S 864-011
      (3) Open these circuit breakers and attach DO-NOT-CLOSE tags:
          (a) On the overhead circuit breaker panel, P11:
              1) 11B35, APU ALTN CONT

BOEING PROPRIETARY - Copyright (C) - Unpublished Work - See title page for details.

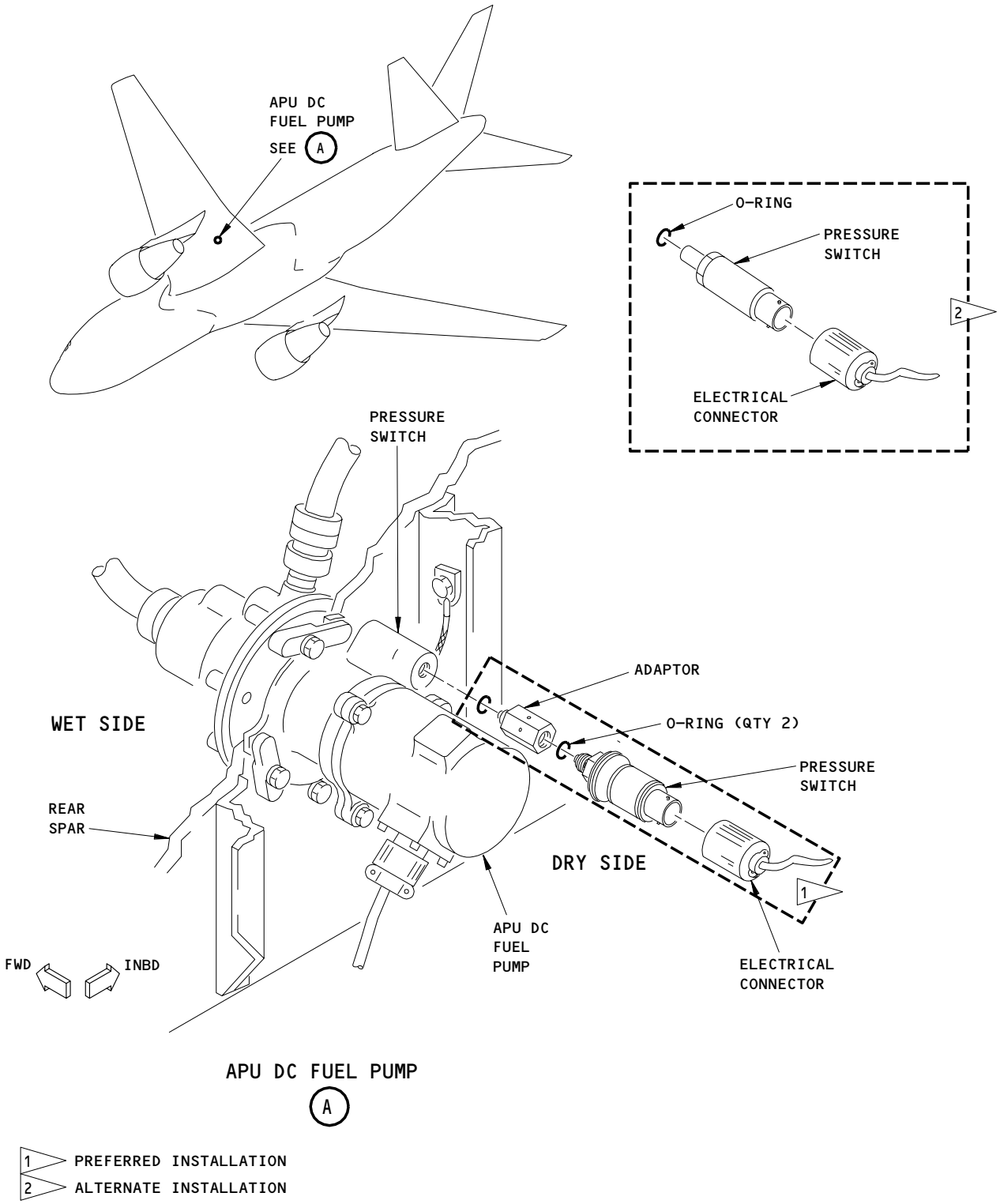

APU DC Fuel Pump Pressure Switch Installation
Figure 401

BOEING PROPRIETARY - Copyright (C) - Unpublished Work - See title page for details.

2) 11D34, FUEL DC PUMP PWR
3) 11D35, FUEL DC PUMP CONT

S 034-002
(4) Disconnect the electrical connector from the pressure switch.

S 024-003
(5) Remove the pressure switch.

S 034-018
(6) Discard the O-ring.

S 024-021
(7) If pressure switch, P/N 60B92400-10, is installed, remove adapter, P/N 346T0042-3, and two O-rings.

TASK 28-25-03-404-004
3. Install the Pressure Switch of the APU DC Fuel Pump (Fig. 401)
A. References
(1) AMM 24-22-00/201, Electrical Power Control
(2) AMM 32-00-15/201, Landing Gear Door Locks
B. Access
(1) Location Zone
531 Center Auxiliary Tank (Left)

C. Procedure

S 434-005
(1) Install a new O-ring in the groove on the pressure switch.

S 424-006
(2) Install the pressure switch on the rear spar.

S 424-022
(3) If installing switch P/N 60B92400-10, install adapter P/N 346T0042-3 and two O-rings.

S 424-019
(4) Tighten the pressure switch to a torque of 95-105 pound-inches.

NOTE: This torque value is satisfactory for all pressure switches. It is possible that the placard adjacent to the pressure switch gives a different torque for the pressure switch installation.

S 434-013
(5) Install the lockwire on the pressure switch.

S 434-007
(6) Connect the electrical connector to the pressure switch.

BOEING PROPRIETARY - Copyright (C) - Unpublished Work - See title page for details.

S 864-014
(7) Remove the DO-NOT-CLOSE tags and close these circuit breakers:
(a) On the overhead circuit breaker panel, P11:
1) 11B35, APU ALTN CONT
2) 11D34, FUEL DC PUMP PWR
3) 11D35, FUEL DC PUMP CONT

S 864-015
(8) Supply electrical power (AMM 24-22-00/201).

S 714-016
(9) Do a test of the pressure switch operation.
(a) Open this circuit breaker and attach a DO-NOT-CLOSE tag:
1) On the main power distribution panel, P6:
a) 6G24, L FWD FUEL BOOST PUMP
(b) Make sure the six EICAS circuit breakers are closed.
(c) Put the APU master control switch of the APU control panel on the overhead panel, P5, to the ON position.
(d) Make sure the EICAS message, DC FUEL PUMP ON, shows on the bottom display.
(e) Put the APU master control switch to the OFF position.
(f) Make sure the EICAS message, DC FUEL PUMP ON, does not show on the bottom display.
(g) Remove the DO-NOT-CLOSE tag and close this circuit breaker:
1) On the P6 panel:
a) 6G24, L FWD FUEL BOOST PUMP

S 094-017

WARNING: USE THE PROCEDURE IN AMM 32-00-15/201 TO REMOVE THE DOOR LOCKS. THE DOORS OPEN AND CLOSE QUICKLY AND CAN CAUSE INJURY TO PERSONS OR DAMAGE TO EQUIPMENT.

(10) Remove the door locks from the landing gear doors and close the doors (AMM 32-00-15/201).

S 864-008
(11) Remove electrical power if it is not necessary (AMM 24-22-00/201).

BOEING PROPRIETARY - Copyright (C) - Unpublished Work - See title page for details.

APU FUEL ISOLATION VALVE - REMOVAL/INSTALLATION

1. General
   A. The APU isolation valve is installed on the rear spar of the left wing between rib 1 and rib 2. The APU isolation valve contains a valve body and an actuator. The valve body is installed on the rear spar in the auxiliary fuel tank. The actuator is installed on the rear spar out of the auxiliary fuel tank.
   B. This procedure contains four tasks. The first task removes the actuator of the APU isolation valve. The second task installs the actuator of the APU isolation valve. The third task removes the valve body of the APU isolation valve. The fourth task installs the valve body of the APU isolation valve.

TASK 28-25-04-004-001

2. Remove the Actuator of the APU Isolation Valve (Fig. 401)
   A. References
      (1) AMM 32-00-15/201, Landing Gear Door Locks
      (2) AMM 32-00-20/201, Landing Gear Downlocks
   B. Access
      (1) Location Zone
          531 Center Auxiliary Tank (Left)

   C. Procedure

      S 864-027
      (1) Open this circuit breaker and attach a DO-NOT-CLOSE tag:
          (a) On the overhead circuit breaker panel, P11:
              1) 11D35, FUEL DC PUMP CONT

      S 214-002
      (2) Make sure the downlocks are installed on the nose and main landing gear (AMM 32-00-20/201).

      S 494-003

      WARNING: USE THE PROCEDURE IN AMM 32-00-15/201 TO INSTALL THE DOOR LOCKS. THE DOORS OPEN AND CLOSE QUICKLY AND CAN CAUSE INJURY TO PERSONS OR DAMAGE TO EQUIPMENT.

      (3) Open the doors for the landing gear and install the door locks (AMM 32-00-15/201).

BOEING PROPRIETARY - Copyright (C) - Unpublished Work - See title page for details.

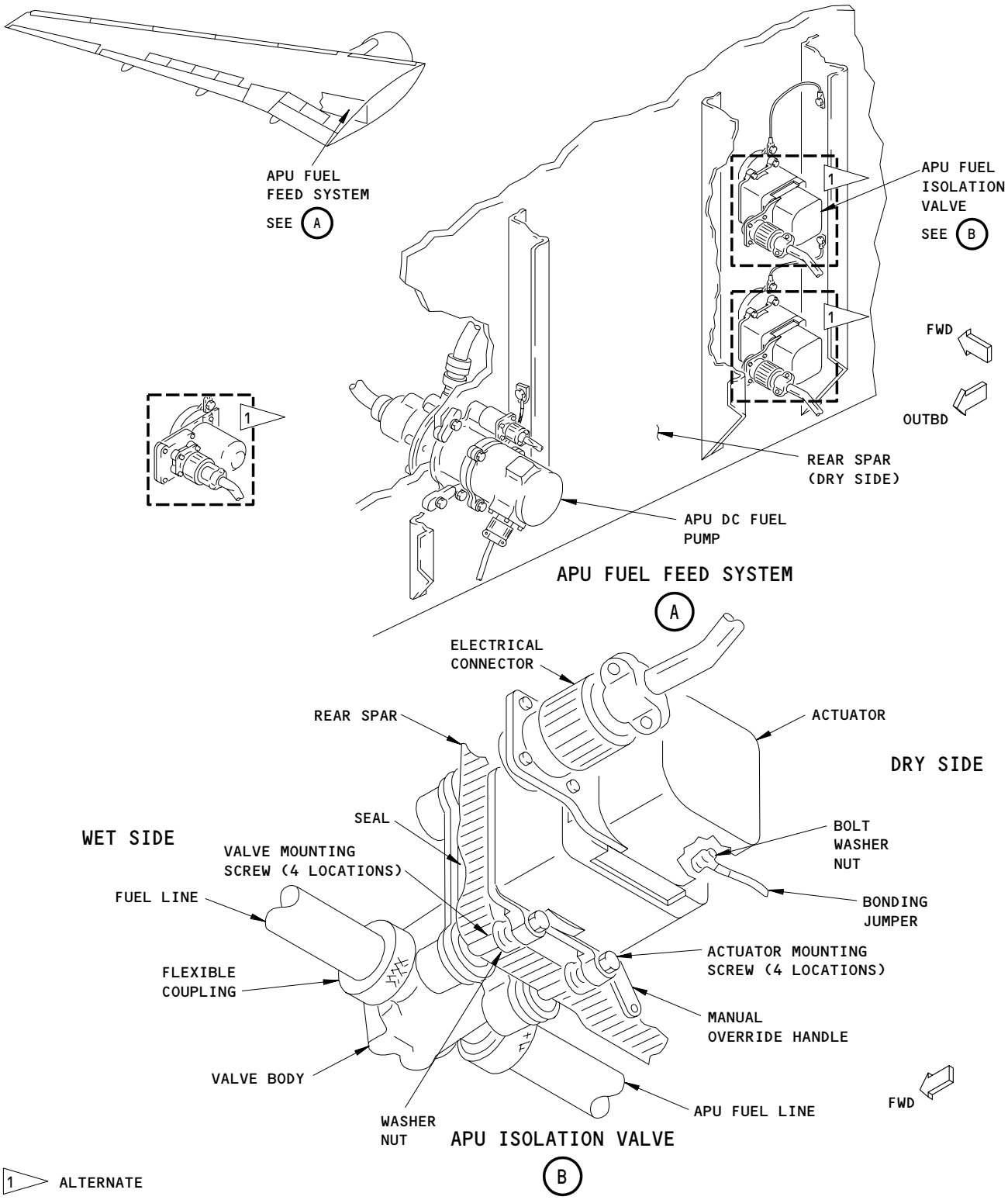

APU Isolation Valve Installation
Figure 401 (Sheet 1)

BOEING PROPRIETARY - Copyright (C) - Unpublished Work - See title page for details.

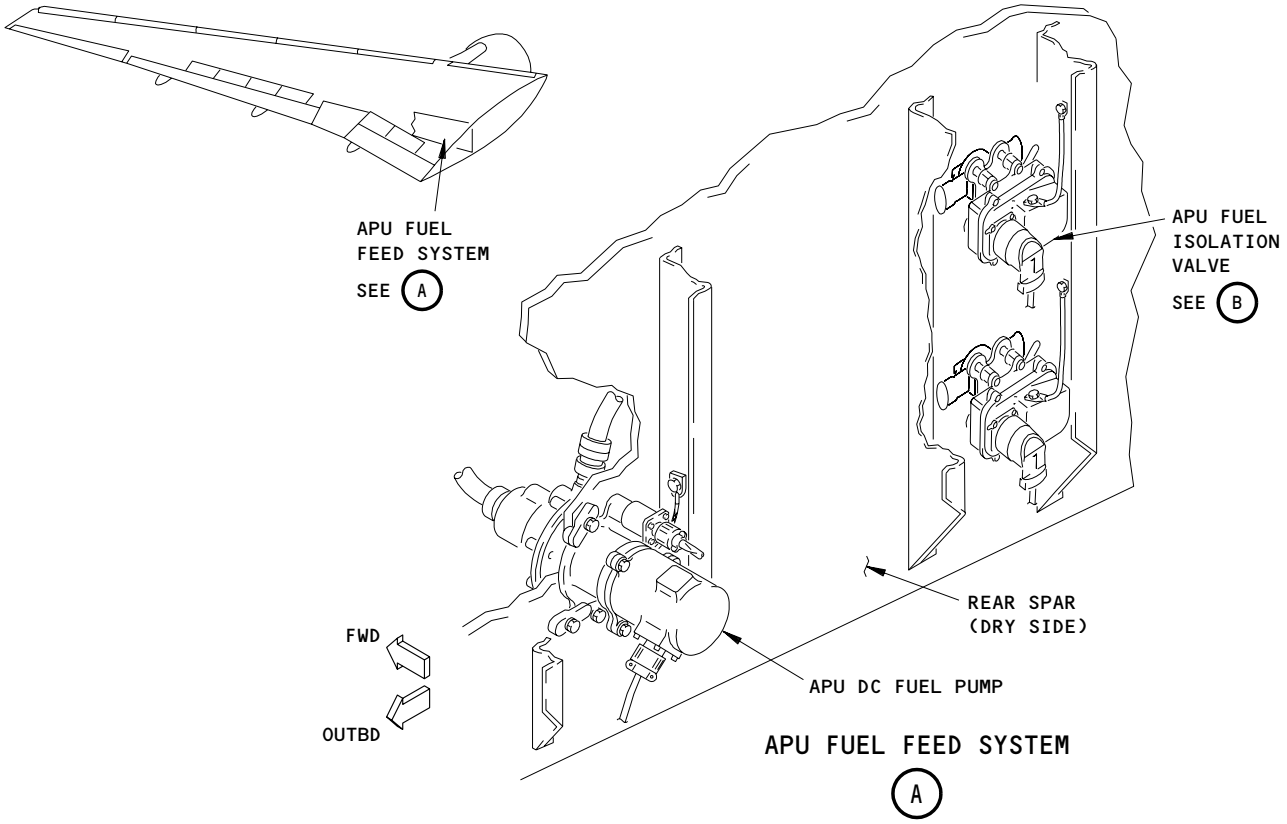

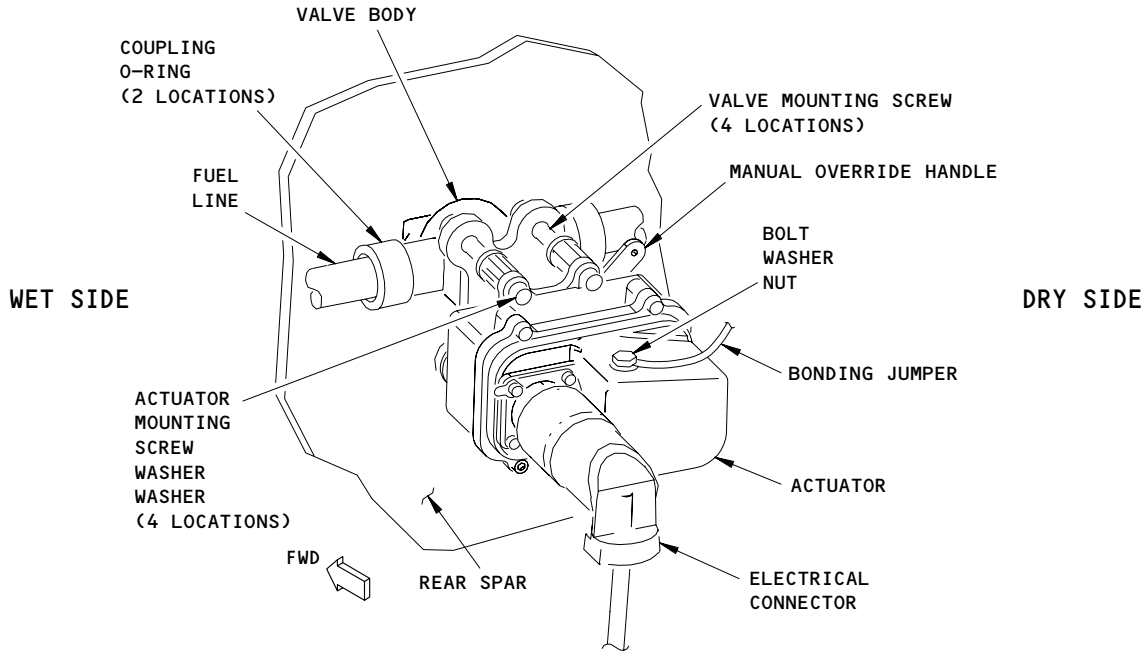

APU Isolation Valve Installation
Figure 401 (Sheet 2)

EFFECTIVITY
AIRPLANES WITH ACTUATOR MA20A2027 OR MA30A1001

1357368

BOEING PROPRIETARY - Copyright (C) - Unpublished Work - See title page for details.

S 014-004
(4) Get access to the actuator of the APU isolation valve on the rear spar of the left wing.

S 214-057
(5) Make sure the manual override handle on the actuator is in the CLOSED position.

S 034-028
(6) Disconnect the electrical connector from the actuator.

S 034-029
(7) Remove the bolt to disconnect the bonding jumper from the actuator.

S 034-030
(8) Remove the actuator mounting screws and the washers.

S 024-005
(9) Disengage the splined shaft of the actuator from the shaft of the valve body.

S 024-031
(10) Remove the actuator.

TASK 28-25-04-404-032
3. Install the Actuator of the APU Isolation Valve (Fig. 401).
A. References
(1) AMM 20-30-88/201, Airplanes Structure Cleaning Solvents (Series 88)
(2) AMM 20-30-92/201, Airplane Structure Cleaning Solvents (Series 92)
(3) AMM 24-22-00/201, Electrical Power Control
(4) AMM 27-61-00/201, Spoiler/Speedbrake Control System
(5) AMM 28-11-00/701, Fuel Tanks
(6) AMM 32-00-15/201, Landing Gear Door Locks
(7) AMM 32-09-02/201, Air/Ground Relays
(8) SWPM 20-20-00, Electrical Bonds and Grounds

BOEING PROPRIETARY - Copyright (C) - Unpublished Work - See title page for details.

B. Equipment
   (1) Brush - Soft Bristle
   (2) BAC5000 - Sealant Removal Tool
C. Consumable Materials
   (1) C00064 Coating - Chemical Conversion Coating for Aluminum or Aluminum Alloys, MIL-C-5541 (MIL-C-81706) - Alodine 600 and1200
   (2) G00034 Cotton Wiper, Process Cleaning Absorbent Wiper (cheesecloth, gauze) BMS 15-5
   (3) C00307 BMS 10-20, Type II Class A - Finish, Corrosion Resistant
   (4) G50021 - Scotch-Brite 96W pad
   (5) Sealant, BMS 5-45 Class C
   (6) Sealant, BMS 5-95 Class B or C
   (7) Sealant, BMS 5-142
   (8) B01008 Solvent - Series 88
   (9) B01012 Solvent - Series 92
D. Access
   (1) Location Zone
       531 Center Auxiliary Tank (Left)

E. AIRPLANES WITHOUT ACTUATOR MA20A2027 OR MA30A1001;
   Install the Actuator of the Engine Fuel Shutoff Valve

   S 824-033
   (1) Align the splined shaft of the actuator with the shaft of the valve body.

   S 424-006
   (2) Install the actuator.

   S 224-007
   (3) Make sure there is a minimum clearance of 0.020 inch between the manual override handle and the rear spar.
       (a) Install washers if it is necessary to get the minimum clearance.

   S 434-034
   (4) Install the actuator mounting screws and the washers.

   S 434-035
   (5) Install the lockwire on the actuator mounting screws.
       (a) Install the bolt, washer and nut to attach the bonding jumper to the actuator.
       (b) Measure the bonding resistance between the valve actuator bonding lug and the airplane structure (SWPM 20-20-00).
           1) Make sure the resistance is 0.005 ohm (5 milliohms) or less.

   S 434-038
   (6) Connect the electrical connector to the actuator.

BOEING PROPRIETARY - Copyright (C) - Unpublished Work - See title page for details.

S 864-039
(7) Remove the DO-NOT-CLOSE tag and close this circuit breaker:
(a) On the overhead circuit breaker panel, P11:
1) 11D35, FUEL DC PUMP CONT

S 864-040
(8) Supply electrical power (AMM 24-22-00/201).

S 214-041
(9) Make sure the six EICAS circuit breakers are closed.

S 864-008

WARNING: DO THE DEACTIVATION PROCEDURE FOR THE SPOILERS OR MOVE ALL PERSONS AND EQUIPMENT AWAY FROM THE SPOILERS. THE SPOILERS CAN RETRACT QUICKLY AND CAUSE INJURY TO PERSONS OR DAMAGE TO EQUIPMENT.

(10) Do the deactivation procedure for the spoilers (AMM 27-61-00/201) or move all persons and equipment away from the spoilers.

S 864-009

WARNING: MAKE SURE YOU DO THE FLIGHT MODE SIMULATION CORRECTLY. IF THE PROCEDURE IS NOT DONE CORRECTLY, INJURY TO PERSONS OR DAMAGE TO EQUIPMENT CAN OCCUR.

(11) Do the Flight Mode Simulation procedure for the No. 1 air/ground system (AMM 32-09-02/201).

S 214-043
(12) Make sure the EICAS message, APU ISLN VAL, shows on the bottom display and then goes off.

S 214-010
(13) Make sure the manual override handle of the actuator moves to the OPEN position.

S 864-011
(14) Put the airplane back to the ground mode (AMM 32-09-02/201).

S 864-012
(15) Do the activation procedure for the spoilers if you did the deactivation procedure (AMM 27-61-00/201).

S 214-044
(16) Make sure the EICAS message, APU ISLN VAL, shows on the bottom display and then goes off.

BOEING PROPRIETARY - Copyright (C) - Unpublished Work - See title page for details.

S 214-013

(17) Make sure the manual override handle of the actuator moves to the CLOSED position.

S 094-014

WARNING: USE THE PROCEDURE IN AMM 32-00-15/201 TO REMOVE THE DOOR LOCKS. THE DOORS OPEN AND CLOSE QUICKLY AND CAN CAUSE INJURY TO PERSONS OR DAMAGE TO EQUIPMENT.

(18) Remove the door locks from the landing gear doors and close the doors (AMM 32-00-15/201).

S 864-045

(19) Remove electrical power if it is not necessary (AMM 24-22-00/201).

F. AIRPLANES WITH ACTUATOR MA20A2027 OR MA30A1001;
Install the Actuator of the Engine Fuel Shutoff Valve

S 144-063

(1) Remove the old sealant and clean the actuator and fasteners (if reused).

(a) Use the sealant removal tool and sealant removal tool handle (or equivalent) to remove old sealant from the actuator.

WARNING: DO NOT GET SOLVENTS IN YOUR MOUTH, YOUR EYES, OR ON YOUR SKIN. DO NOT BREATHE THE FUMES FROM SOLVENTS. SOLVENTS ARE DANGEROUS MATERIALS. SOLVENTS CAN BE FLAMMABLE. OBEY THE MATERIAL SAFETY DATA SHEETS (MSDS) FOR SOLVENTS. OBEY LOCAL REGULATIONS FOR THE CORRECT PROCEDURES TO USE OR DISCARD SOLVENTS. SOLVENTS CAN CAUSE INJURIES TO PERSONNEL AND DAMAGE TO EQUIPMENT.

(b) To remove the remaining sealant, grease, oil, dirt, and other contamination from the componenets, use one of these items soaked with Series 92 solvent (AMM 20-30-92/201).

1) soft bristle brush
2) cotton wiper
3) Scotch-Brite 96W pad

S 424-064

(2) Do these steps to prepare the actuator for a sealed electrical faying surface bond (SWPM 20-20-00):

BOEING PROPRIETARY - Copyright (C) - Unpublished Work - See title page for details.

WARNING: DO NOT GET SOLVENTS IN YOUR MOUTH, YOUR EYES, OR ON YOUR SKIN. DO NOT BREATHE THE FUMES FROM SOLVENTS. SOLVENTS ARE DANGEROUS MATERIALS. SOLVENTS CAN BE FLAMMABLE. OBEY THE MATERIAL SAFETY DATA SHEETS (MSDS) FOR SOLVENTS. OBEY LOCAL REGULATIONS FOR THE CORRECT PROCEDURES TO USE OR DISCARD SOLVENTS. SOLVENTS CAN CAUSE INJURIES TO PERSONNEL AND DAMAGE TO EQUIPMENT.

(a) Final clean the actuator feet surfaces with a cotton wiper soaked with Series 88 solvent (AMM 20-30-88/201).
(b) Rub dry with a clean, dry cotton wiper.
(c) Continue to clean and dry the surface until the dry cotton wiper stays clean.
(d) Apply a thin continuous layer of sealant to the actuator contact areas (four locations).

NOTE: CDCCL - Refer to the task: Airworthiness Limitation Precautions (AMM 28-00-00/201), for important information on Critical Design Configuration Control Limitations (CDCCLs).

NOTE: This is applicable to Airworthiness Limitation 28-AWL-23.

1) Use BMS 5-45 Class C or BMS 5-95 Class B or C sealant for the faying surface seal.
2) Make sure the sealant layer is approximately 0.005 inch (0.127 mm) thick.

(e) Apply sealant to the shank and the threads of the actuator mounting screws.

NOTE: CDCCL - Refer to the task: Airworthiness Limitation Precautions (AMM 28-00-00/201), for important information on Critical Design Configuration Control Limitations (CDCCLs).

NOTE: This is applicable to Airworthiness Limitation 28-AWL-23.

1) Use BMS 5-45 Class C or BMS 5-95 Class B or C sealant for the wet installation of the actuator mounting screws.

NOTE: Use the same sealant for the mounting screws that was used for the faying surface seal.

BOEING PROPRIETARY - Copyright (C) - Unpublished Work - See title page for details.

2) Make sure the sealant applied to the fasteners is approximately 0.060 inch (1.52 mm) thick.

S 424-065

(3) Do these steps to install the actuator.
(a) Make sure the manual override handle is in the CLOSED position.
(b) Align the splined shaft with the adapter shaft.
(c) Make sure the two spaces for teeth on the adapter shaft align with the splined shaft.
(d) Put the splined shaft into the actuator shaft.

NOTE: The contact areas of the actuator automatically align with the mounting points on the index plate.

(e) Install the actuator mounting screws and washers.

NOTE: Lockwire is not necessary for the mounting screws.

(f) Tighten the actuator mounting screws to 20 in-lb (2.3 Nm).
(g) Make sure the sealant is continuously squeezed out along the edges of the contact surfaces.
(h) If there are gaps, bubbles or voids in the sealant squeeze out, then disassemble and apply more sealant.
(i) Shape the squeezed out sealant into a fillet seal.
(j) As an option, remove the extra squeezed out sealant.

NOTE: Make sure the sealant that remains is flush with the mating part edges.

S 764-066

(4) Measure the electrical bonding resistance between the upper housing of the actuator (at the bare metal bonding jumper installation location) and the rear spar (SWPM 20-20-00).
(a) Do this measurement with the bonding jumper and the electrical connector disconnected.
(b) Make sure the bonding jumper does not touch the actuator during the bonding measurement.
(c) Make sure the bonding resistance is 0.0025 ohm (2.5 milliohms) or less.

NOTE: CDCCL - Refer to the task: Airworthiness Limitation Precautions (AMM 28-00-00/201), for important information on Critical Design Configuration Control Limitations (CDCCLs).

NOTE: This is applicable to Airworthiness Limitation 28-AWL-23.

BOEING PROPRIETARY - Copyright (C) - Unpublished Work - See title page for details.

S 764-067

(5) Measure the electrical bonding resistance between the loose end of the bonding jumper and the rear spar (SWPM 20-20-00).

(a) Make sure the bonding resistance is 0.0015 ohm (1.5 milliohms) or less.

NOTE: CDCCL - Refer to the task: Airworthiness Limitation Precautions (AMM 28-00-00/201), for important information on Critical Design Configuration Control Limitations (CDCCLs).

NOTE: This is applicable to Airworthiness Limitation 28-AWL-23.

S 424-068

(6) Do these steps to install the bonding jumper to the actuator:

(a) Final clean the contact surfaces with a cotton wiper soaked with Series 88 solvent (AMM 20-30-88/201).

1) Rub dry with a clean, dry cotton wiper.

2) Continue to clean and dry the surface until the dry cotton wiper stays clean.

(b) Apply a thin continuous layer of sealant to both surfaces of the bonding jumper and the washer.

1) Use BMS 5-142 sealant for the faying surface seal.

2) Make sure the sealant layer is approximately 0.005 inch (0.127 mm) thick.

(c) Install the bolt, washer, and nut to attach the bonding jumper to the actuator.

(d) AIRPLANES WITHOUT ACTUATOR MA30A1001;
Tighten the bolt to 20 in-lb (2.3 Nm).

(e) AIRPLANES WITH ACTUATOR MA30A1001;
Tighten the bolt to 35 in-lb (4.0 Nm).

(f) Measure the electrical bonding resistance between the upper housing of the actuator and the attached bonding jumper terminal (SWPM 20-20-00).

1) Do not touch the bolt when you make the bonding measurement.

2) Make sure the bonding resistance is 0.001 ohm (1 milliohm) or less.

NOTE: CDCCL - Refer to the task: Airworthiness Limitation Precautions (AMM 28-00-00/201), for important information on Critical Design Configuration Control Limitations (CDCCLs).

NOTE: This is applicable to Airworthiness Limitation 28-AWL-23.

BOEING PROPRIETARY - Copyright (C) - Unpublished Work - See title page for details.

(g) Apply a cap seal BMS 5-142 sealant over the terminal of the bonding jumper and bolt.

S 914-069

(7) Do this task to apply protective finishes to the bare areas of the rear spar: Apply the Corrosion Resistant Finish (Topcoat) (AMM 28-11-00/701).

NOTE: Re-apply the protective finishes to the rear spar where the electrical bonding probes removed the finishes.

S 434-070

(8) Connect the electrical connector to the actuator.

S 864-071

(9) Remove the DO-NOT-CLOSE tags and close these circuit breakers:
(a) On the overhead circuit breaker panel, P11:
1) 11B35, APU ALTN CONT
(b) On the main power distribution panel, P6:
1) 6E3, FUEL VALVES APU

S 714-072

(10) Do the operational test of the APU fuel feed system (AMM 28-25-00/501) to do a test of the actuator operation.

S 094-073

WARNING: USE THE PROCEDURE IN AMM 32-00-15/201 TO INSTALL THE DOOR LOCKS. THE DOORS OPEN AND CLOSE QUICKLY AND CAN CAUSE INJURY TO PERSONS OR DAMAGE TO EQUIPMENT.

(11) Remove the door locks from the landing gear doors and close the doors (AMM 32-00-15/201).

S 864-074

(12) Remove electrical power if it is not necessary (AMM 24-22-00/201).

TASK 28-25-04-004-015

4. Remove the Valve Body of the APU Isolation Valve (Fig. 401)
A. References
(1) AMM 28-11-00/201, Fuel Tanks (Purging and Entry)
(2) AMM 28-11-02/401, Auxiliary Tank Access Doors
(3) AMM 28-26-00/201 Defueling
B. Access
(1) Location Zone
531 Center Auxiliary Tank (Left)

(2) Access Panel
531BB Auxiliary Tank Access Door (Right)

BOEING PROPRIETARY - Copyright (C) - Unpublished Work - See title page for details.

C. Procedure

S 864-016
(1) Push the FUEL CROSSFEED switch-light of the fuel management control panel on the P5 panel to the closed position.

S 654-017
(2) Defuel the main and auxiliary fuel tanks (AMM 28-26-00/201).

S 654-046
(3) Drain and purge the main and auxiliary fuel tanks (AMM 28-11-00/201).

S 034-047
(4) Remove the actuator per the Remove the Actuator of the APU Isolation Valve procedure.

S 014-048
(5) Remove the left auxiliary tank access door, 531BB (AMM 28-11-02/401).

S 944-018

WARNING: OBEY THE FUEL TANK ENTRY PRECAUTIONS. FAILURE TO OBEY THE FUEL TANK ENTRY PRECAUTIONS COULD CAUSE INJURY TO PERSONS OR DAMAGE TO EQUIPMENT.

(6) Obey the fuel tank entry precautions (AMM 28-11-00/201).

S 014-019
(7) Go into the auxiliary fuel tank.

S 034-049
(8) Disconnect the flexible couplings from the valve body.

S 034-020
(9) Discard the O-rings.

S 034-050
(10) From out of the fuel tank, remove the nuts from the valve mounting screws.

S 024-051
(11) Remove the valve body from in the fuel tank.

S 034-021
(12) Discard the seal.

BOEING PROPRIETARY - Copyright (C) - Unpublished Work - See title page for details.

TASK 28-25-04-404-022

5. Install the Valve Body of the APU Isolation Valve (Fig. 401)

A. Consumable Materials

(1) A00247 Chromate Type Sealant - BMS 5-95, Class B-1/2

B. References

(1) AMM 12-11-01/301, Fuel Tank Pressure Fueling
(2) AMM 28-11-00/201, Fuel Tanks (Purging and Entry)
(3) AMM 28-11-02/401, Auxiliary Tank Access Doors
(4) AMM 51-31-01/201, Seals and Sealing

C. Access

(1) Location Zone
531 Center Auxiliary Tank (Left)

(2) Access Panel
531BB Auxiliary Tank Access Door (Left)

D. Procedure

S 944-023

WARNING: OBEY THE FUEL TANK ENTRY PRECAUTIONS. FAILURE TO OBEY THE FUEL TANK ENTRY PRECAUTIONS COULD CAUSE INJURY TO PERSONS OR DAMAGE TO EQUIPMENT.

(1) Obey the fuel tank entry precautions (AMM 28-11-00/201).

S 014-024
(2) Go into the auxiliary fuel tank.

S 424-052
(3) With a new seal, put the valve body on the rear spar.

S 434-053
(4) From out of the fuel tank, install the nuts on the valve mounting screws that go through the rear spar.

S 394-026
(5) Apply the chromate type sealant where the valve mounting screw touches the rear spar (AMM 51-31-01/201).

S 434-054
(6) With new O-rings, connect the flexible couplings to the valve body.

S 414-055
(7) Install the left auxiliary tank access door, 531BB (AMM 28-11-02/401).

S 434-056
(8) Install the actuator per the Install the Actuator of the APU Isolation Valve procedure.

BOEING PROPRIETARY - Copyright (C) - Unpublished Work - See title page for details.

S 654-025

(9) Refuel the fuel tanks if no more work is necessary (AMM 12-11-01/301).

BOEING PROPRIETARY - Copyright (C) - Unpublished Work - See title page for details.

APU FUEL ISOLATION VALVE - INSPECTION/CHECK

1. General
   A. The APU isolation valve is installed on the rear spar of the left wing between rib 1 and rib 2. The APU isolation valve contains a actuator and a valve body, which is is installed on the rear spar in the auxiliary fuel tank.
   B. This procedure contains a functional check of the bonding resistance between the structure and the APU fuel isolation valve.

TASK 28-25-04-706-082

2. APU Fuel Isolation Valve - Bonding Resistance Check (Fig. 601)
   A. Equipment
      (1) Bonding Meter - Use one of these:
         (a) Bonding Meter - T477W
             Avtron Manufacturing Co.
             Cleveland, OH
         (b) Bonding Meter - Model M1
             (Serial Number A000012 and subsequent)
             BCD Electronics Ltd.
             Vancouver, Canada
      (2) Consumable Materials
         (a) G00034 Cotton Wiper, Process Cleaning Absorbent Wiper (Cheese cloth, gauze) BMS 15-5
         (b) Sealant, BMS 5-142
         (c) B01008 Solvent - Series 88
   B. References
      (1) AMM 20-30-88/201, Airplane Structure Cleaning Solvents (Series 88)
      (2) AMM 32-00-15/201, Landing Gear Door Locks
      (3) AMM 32-00-20/201, Landing Gear Downlocks
      (4) SWPM 20-20-00, Electrical Bonding and Grounds
   C. Access
      (1) Location Zone
          551 Rear Spar to MLG Support Beam

   D. Prepare for the Procedure

      S 866-069
      (1) Open this circuit breaker and attach a DO-NOT-CLOSE tag:
         (a) On the overhead circuit breaker panel, P11:
             1) 11D35, FUEL DC PUMP CONT

BOEING PROPRIETARY - Copyright (C) - Unpublished Work - See title page for details.

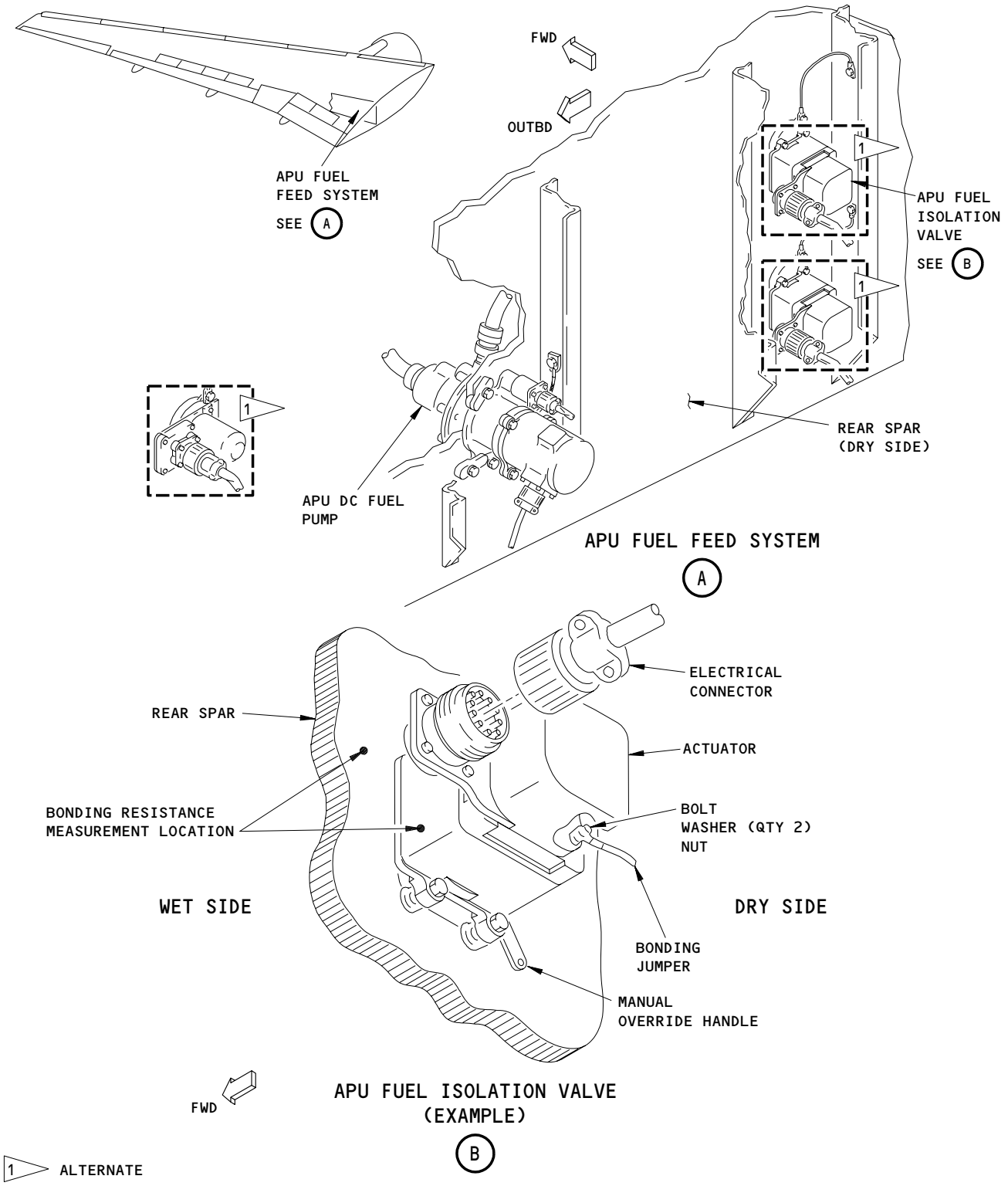

APU Isolation Valve Inspection
Figure 601 (Sheet 1)

BOEING PROPRIETARY - Copyright (C) - Unpublished Work - See title page for details.

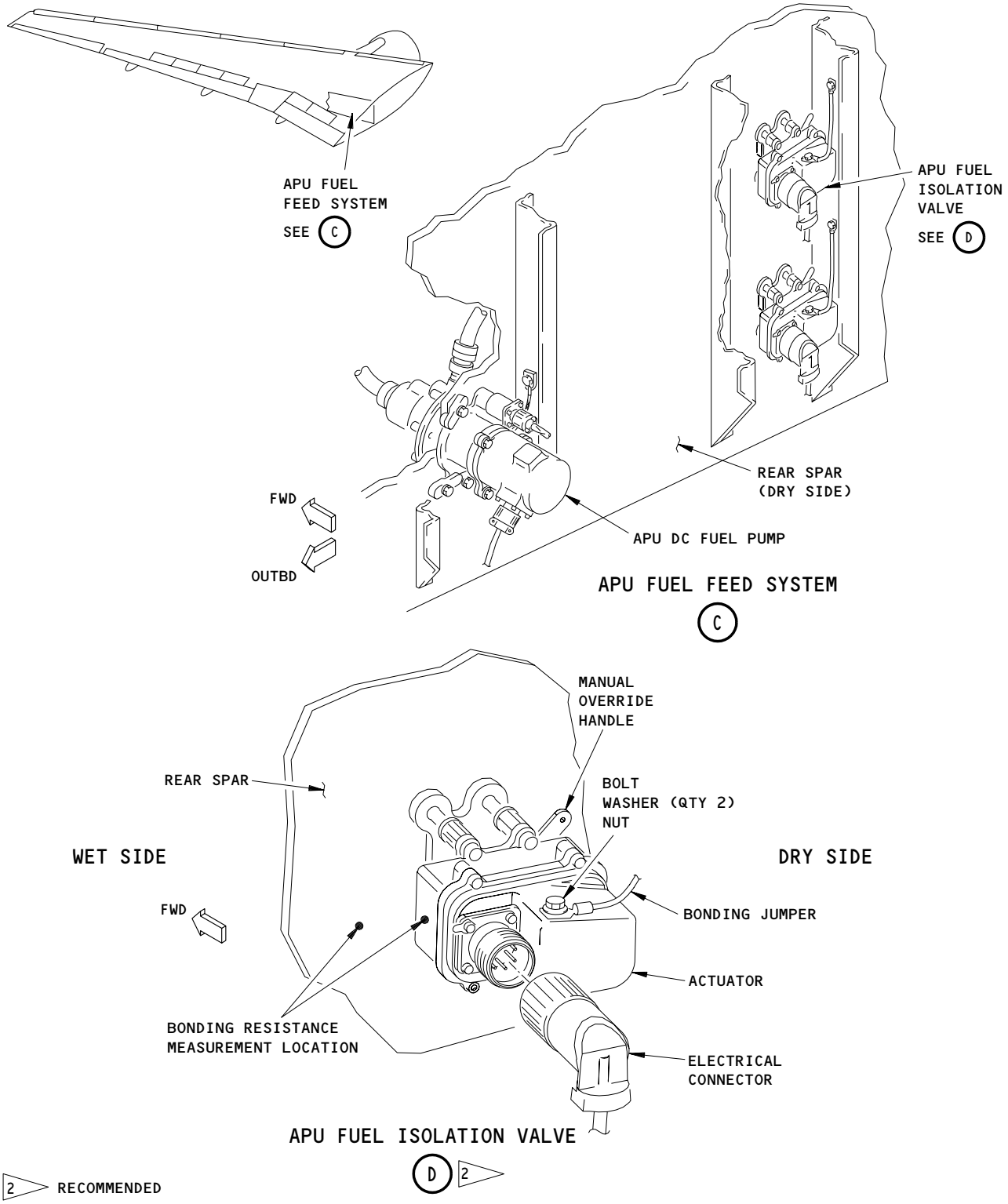

APU Isolation Valve Inspection
Figure 601 (Sheet 2)

EFFECTIVITY
AIRPLANES WITH ACTUATOR MA20A2027 OR MA30A1001

BOEING PROPRIETARY - Copyright (C) - Unpublished Work - See title page for details.

S 486-070

WARNING: MAKE SURE THAT THE DOWNLOCKS ARE INSTALLED IN ALL OF THE LANDING GEAR. WITHOUT THE DOWNLOCKS, THE LANDING GEAR CAN RETRACT AND CAUSE INJURIES TO PERSONS AND DAMAGE TO EQUIPMENT.

(2) Make sure the downlocks are installed in the nose and main landing gear (AMM 32-00-20/201).

S 486-071

WARNING: OBEY THE INSTALLATION PROCEDURE FOR THE DOOR LOCK. THE DOORS OPEN AND CLOSE QUICKLY. THE MOVEMENT OF THE DOORS CAN CAUSE INJURIES TO PERSONS AND DAMAGE TO EQUIPMENT.

(3) Open the doors for the landing gear and install the door locks (AMM 32-00-15/201).

S 026-072

(4) Disconnect the electrical connector from the actuator.

E. AIRPLANES WITHOUT ACTUATOR MA20A2027 OR MA30A1001; Electrical Bonding Measurement

S 026-073

(1) Disconnect the bonding jumper from the actuator.

S 766-074

(2) Measure the bonding resistance between the actuator and the rear spar (SWPM 20-20-00).
   (a) Make sure the bonding resistance is 5 milliohms (0.005 ohm) or less.

S 426-075

(3) Install the bolt, washers, and nut to attach the bonding jumper to the actuator.

F. AIRPLANES WITH ACTUATOR MA20A2027 OR MA30A1001; Electrical Bonding Measurement

S 026-076

(1) Disconnect the bonding jumper from the actuator.

BOEING PROPRIETARY - Copyright (C) - Unpublished Work - See title page for details.

S 766-077
(2) Measure the bonding resistance between the actuator and the rear spar (SWPM 20-20-00).
(a) Make sure the bonding resistance is 5 milliohms (0.005 ohm) or less.

S 426-078
(3) Do these steps to install the bonding jumper to the actuator:
(a) Clean the contact surfaces with a cotton wiper soaked with Series 88 solvent (AMM 20-30-88/201).
1) Clean the surface until the dry cotton wiper stays clean.
(b) Apply a thin continuous layer of sealant to both surfaces of the bonding jumper and the washer.
1) Use the BMS 5-142 sealant for the faying surface seal.
(c) Install the bolt, washers, and nut to attach the bonding jumper to the actuator.
1) AIRPLANES WITHOUT ACTUATOR MA30A1001;
Tighten the bolt to 20 in-lb (2.3 Nm).
2) AIRPLANES WITH ACTUATOR MA30A1001;
Tighten the bolt to 35 in-lb (4.0 Nm).
(d) Measure the electrical bonding resistance between the upper housing of the actuator and the attached bonding jumper terminal (SWPM 20-20-00).
1) Do not touch the bolt when you make the bonding measurement.
2) Make sure the bonding resistance is 0.001 ohm (1 milliohm) or less.

NOTE: CDCCL - Refer to the task: Airworthiness Limitation Precautions (AMM 28-00-00/201), for important information on Critical Design Configuration Control Limitations (CDCCLs).

NOTE: This is applicable to Airworthiness Limitation 28-AWL-23.

(e) Apply a cap seal of BMS 5-142 sealant over the terminal of the bonding jumper and the bolt.

G. Put the Airplane Back to Its Usual Condition

S 426-079
(1) Connect the electrical connector to the actuator.

S 866-083
(2) Remove the DO-NOT-CLOSE tag and close this circuit breaker:
(a) On the overhead circuit breaker panel, P11:
1) 11D35, FUEL DC PUMP CONT

BOEING PROPRIETARY - Copyright (C) - Unpublished Work - See title page for details.

S 086-080

WARNING: OBEY THE REMOVAL PRECEDURE FOR THE DOOR LOCKS. THE DOORS OPEN AND CLOSE QUICKLY. THE MOVEMENT OF THE DOORS CAN CAUSE INJURIES TO PERSONS AND DAMAGE TO EQUIPMENT.

(3) Remove the door locks and close the landing gear doors (AMM 32-00-15/201).

BOEING PROPRIETARY - Copyright (C) - Unpublished Work - See title page for details.

APU FUEL SUPPLY LINE AND SHROUD - REMOVAL/INSTALLATION

1. General
   A. The APU fuel line is installed between the left auxiliary fuel tank and the APU. To make the removal and installation easier, the APU fuel line is divided into parts. The parts are:
      (1) The APU fuel line in the left auxiliary fuel tank
      (2) The APU fuel line in the center auxiliary fuel tank
      (3) The APU fuel line and shroud between the center compartment of the auxiliary fuel tank and the pressure bulkhead for the aft cargo compartment.
      (4) The APU fuel line and shroud between the pressure bulkhead for the bulk cargo compartment and the APU firewall bulkhead.
   B. Where the APU fuel line is flexible (between the auxiliary fuel tank and the APU), a shroud is installed on the APU fuel line.
   C. It is not necessary to replace the aluminum tubing for the fuel system (Types 2024, 5052, and 6061) if the damage is not more than the approved damage limits in this task: Engine Fuel Line and Coupling Damage and Wear Limits Check (AMM 28-22-07/601).
   D. For approved repair of fuel systems aluminum tubing, refer to the AMM 20-10-09/801.

TASK 28-25-05-004-092

2. Remove the APU Fuel Line in the Left Auxiliary Fuel Tank (Fig. 401)
   A. Equipment
      (1) Container - for use with fuel, commercially available
   B. References
      (1) AMM 28-11-00/201, Fuel Tanks
      (2) AMM 28-11-02/401, Auxiliary Tank Access Doors
      (3) AMM 28-22-07/401, Fuel Lines and Fittings
      (4) AMM 28-26-00/201, Defueling
   C. Access
      (1) Location Zone
            531 Center Auxiliary Tank (Left)

BOEING PROPRIETARY - Copyright (C) - Unpublished Work - See title page for details.

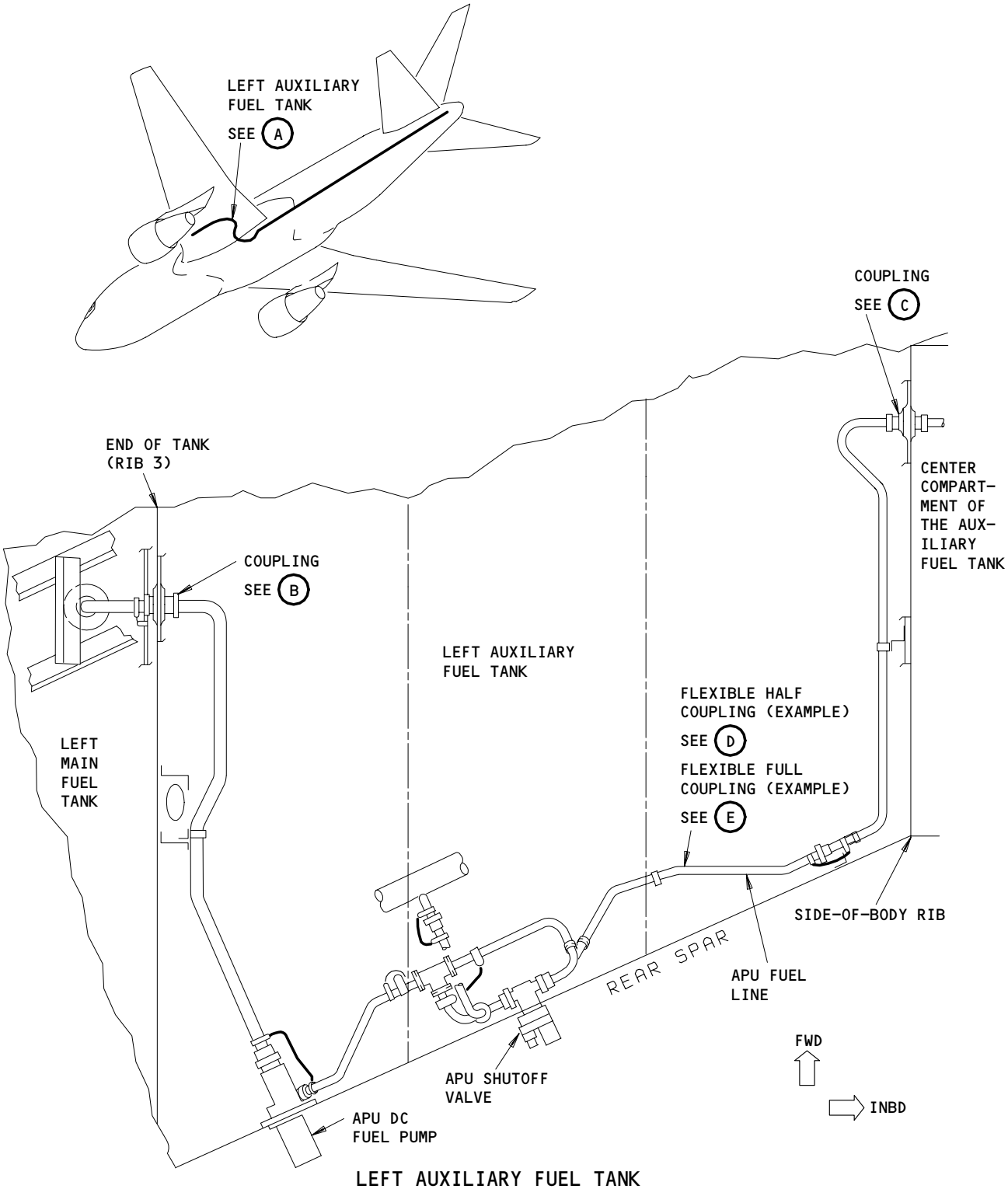

LEFT AUXILIARY FUEL TANK

A

APU Fuel Line and Shroud Installation - Left Auxiliary Fuel Tank
Figure 401 (Sheet 1)

BOEING PROPRIETARY - Copyright (C) - Unpublished Work - See title page for details.

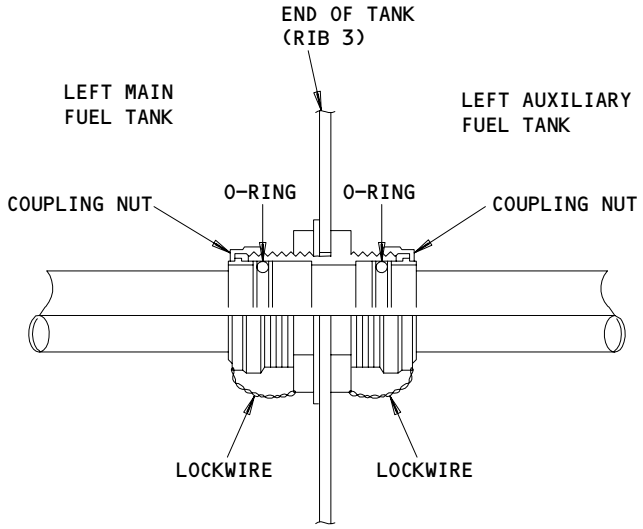

COUPLING

B

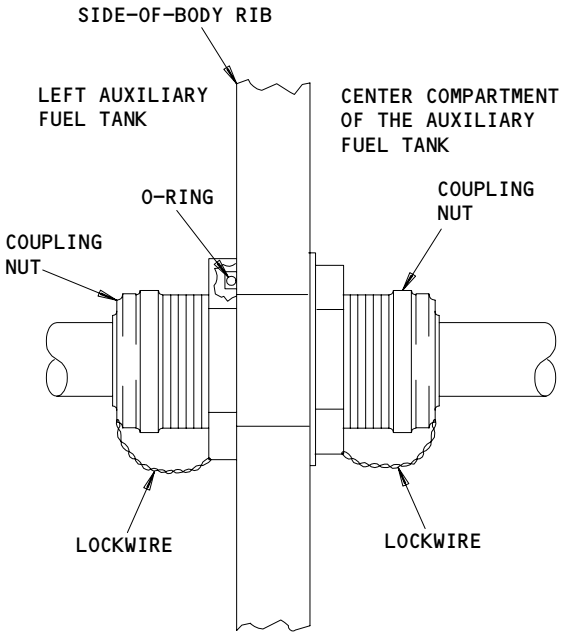

COUPLING

C

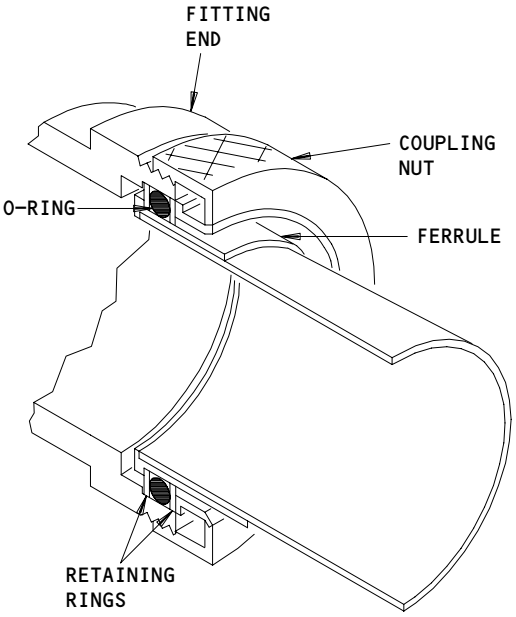

FLEXIBLE HALF COUPLING

D

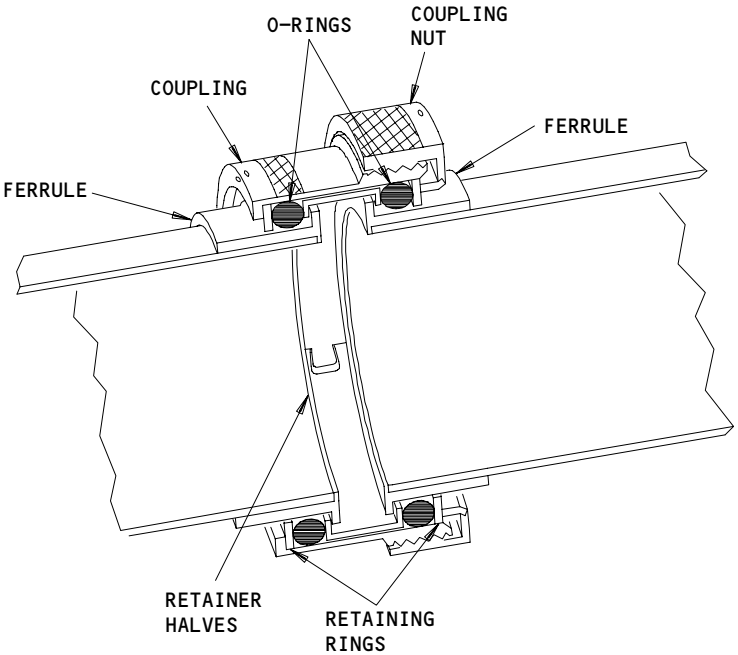

FLEXIBLE FULL COUPLING

E

APU Fuel Line and Shroud Installation - Left Auxiliary Fuel Tank
Figure 401 (Sheet 2)

BOEING PROPRIETARY - Copyright (C) - Unpublished Work - See title page for details.

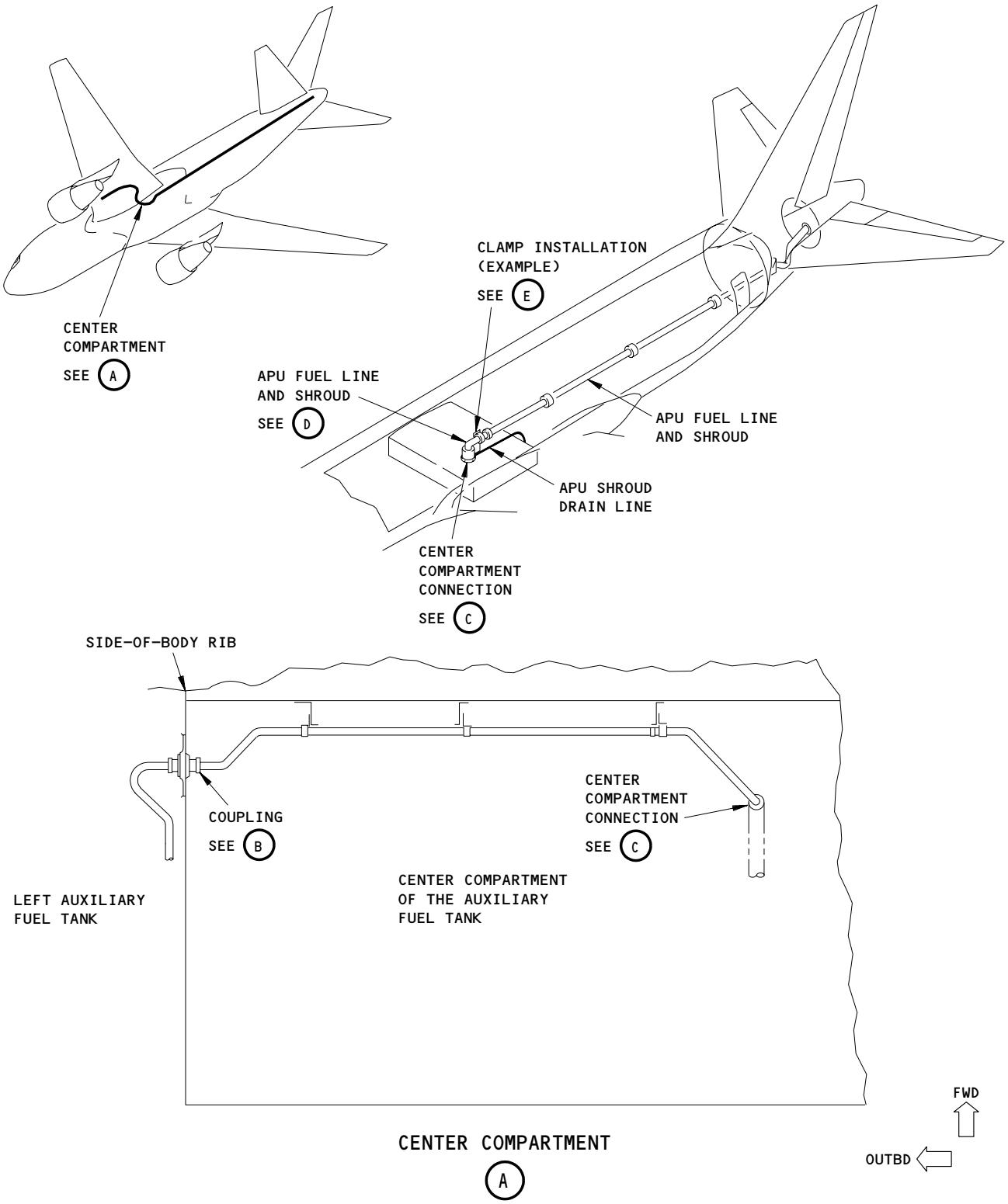

APU Fuel Line and Shroud Installation
(Center Compartment of the Auxiliary Fuel Tank)
Figure 402 (Sheet 1)

BOEING PROPRIETARY - Copyright (C) - Unpublished Work - See title page for details.

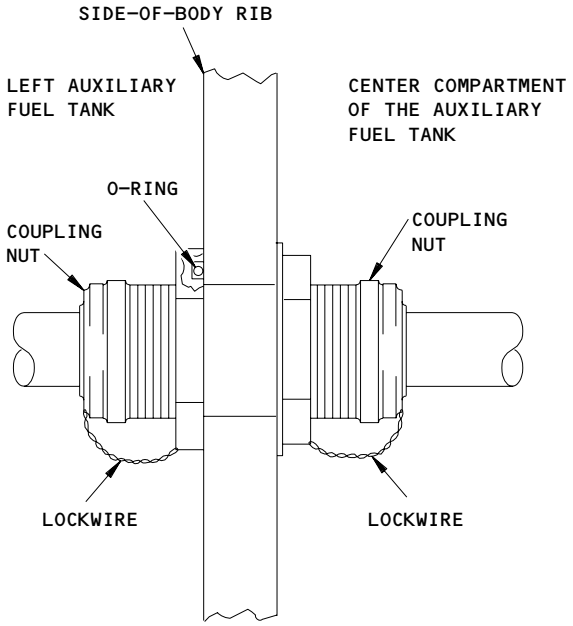

COUPLING

B

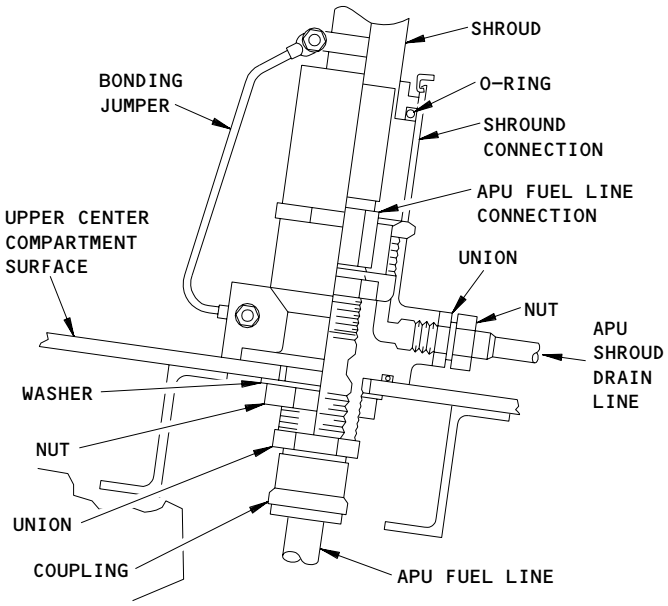

CENTER COMPARTMENT CONNECTION

C

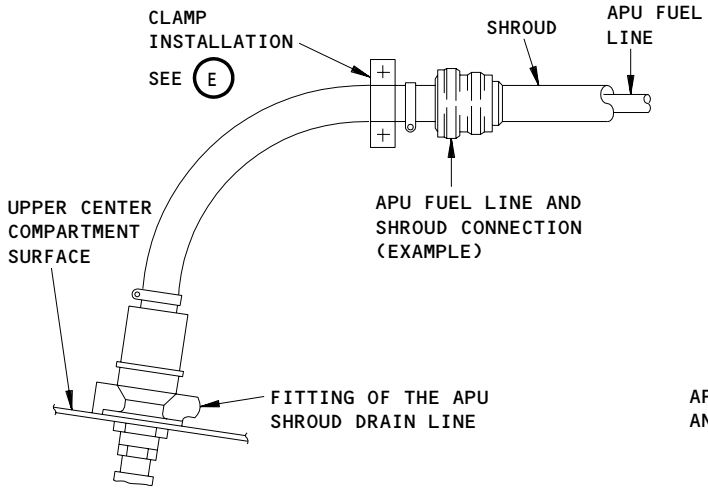

APU FUEL LINE AND SHROUD

D

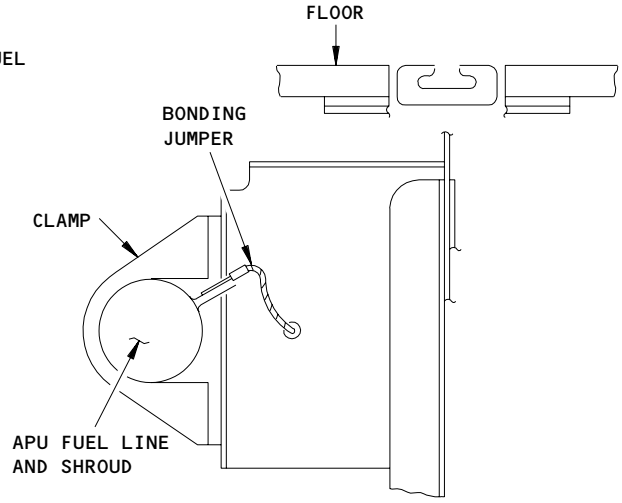

CLAMP INSTALLATION
(EXAMPLE)

E

APU Fuel Line and Shroud Installation
Center Compartment of the Auxiliary Fuel Tank
Figure 402 (Sheet 2)

BOEING PROPRIETARY - Copyright (C) - Unpublished Work - See title page for details.

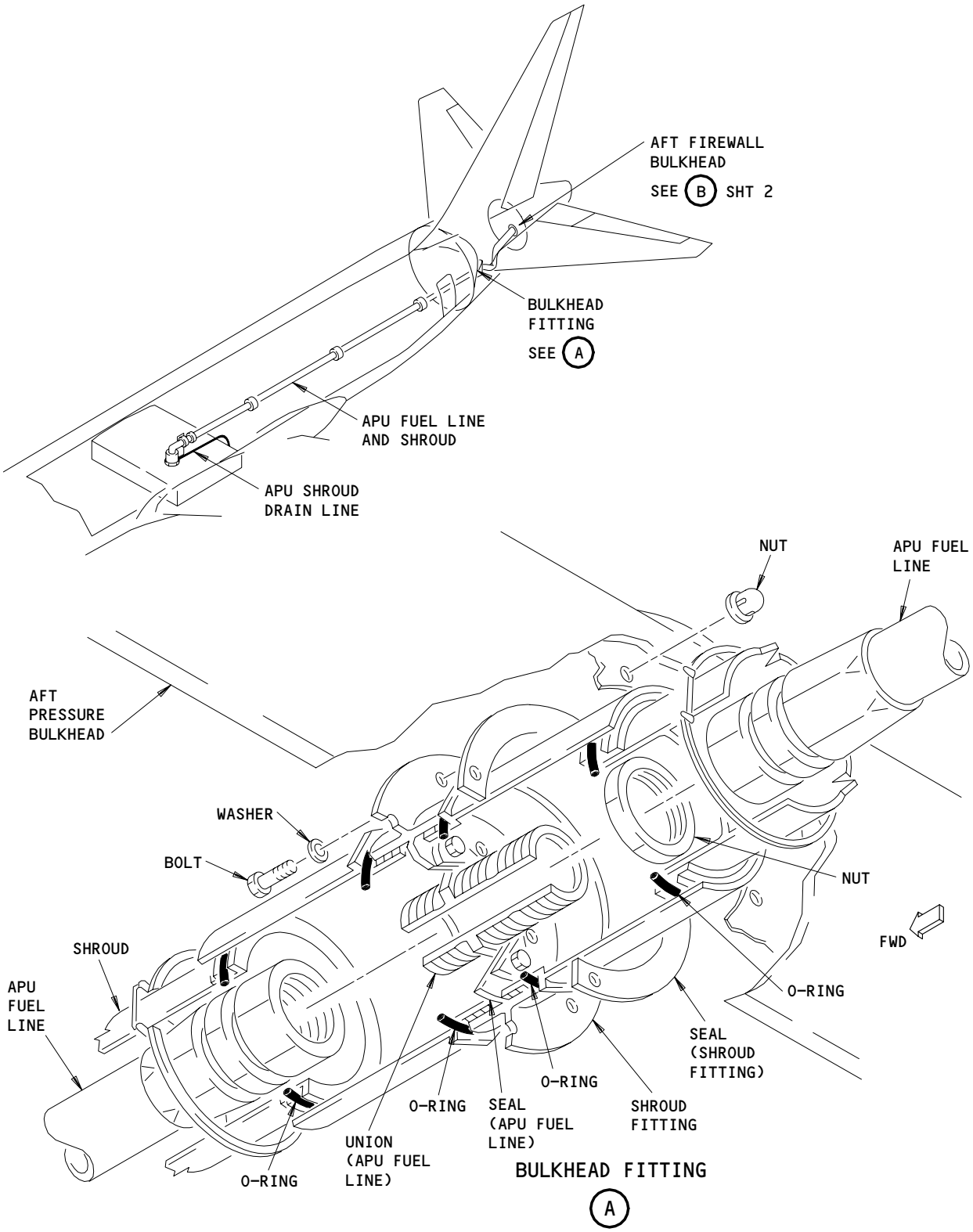

APU Fuel Line and Shroud Installation - Aft Pressure Bulkhead and APU Firewall Bulkhead
Figure 403 (Sheet 1)

BOEING PROPRIETARY - Copyright (C) - Unpublished Work - See title page for details.

(2) Access Panel
531BB Auxiliary Tank Access Door (Left)

D. Procedure

S 654-001
(1) Defuel the auxiliary fuel tank (AMM 28-26-00/201).

S 014-004
(2) Remove the left auxiliary tank access door, 531BB (AMM 28-11-02/401).

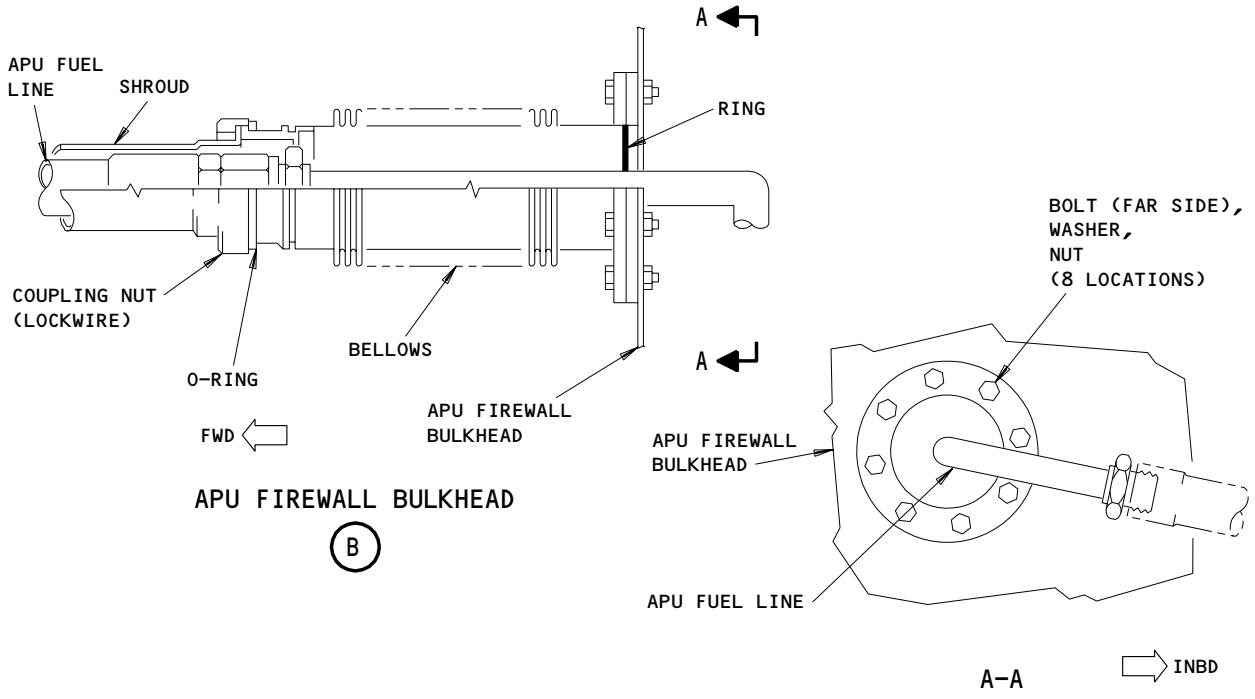

APU Fuel Line and Shroud Installation - Aft Pressure Bulkhead and APU Firewall Bulkhead
Figure 403 (Sheet 2)

BOEING PROPRIETARY - Copyright (C) - Unpublished Work - See title page for details.

S 944-093

WARNING: DO THE PURGING AND FUEL TANK ENTRY PROCEDURE. FAILURE TO FOLLOW THE PURGING AND FUEL TANK ENTRY PROCEDURE COULD CAUSE INJURY TO PERSONS OR DAMAGE TO EQUIPMENT.

(3) Do the Purging and Fuel Tank Entry procedures (AMM 28-11-00/201).

S 864-005

(4) Open these circuit breakers and attach DO-NOT-CLOSE tags:
   (a) On the overhead circuit breaker panel, P11:
      1) 11B36, APU START
      2) 11D34, FUEL DC PUMP PWR
      3) 11D35, FUEL DC PUMP CONT
      4) 11M25, FUEL PUMPS L FWD R AFT
   (b) On the main power distribution panel, P6:
      1) 6E3, APU FUEL VALVES

S 014-007

(5) Go into the left auxiliary fuel tank.

S 034-094

(6) Remove the flexible full couplings, flexible half couplings and fittings to disconnect the APU fuel line (AMM 28-22-07/401).

S 654-054

(7) Drain all fuel remaining in the APU fuel line into a container.

S 034-008

(8) Remove the bonding jumpers and clamps from the APU fuel line.

S 034-009

(9) Disconnect the clamps from the structure.

S 024-095

(10) Remove the APU fuel line and clamps.

BOEING PROPRIETARY - Copyright (C) - Unpublished Work - See title page for details.

S 034-010
(11) Discard all the O-rings and retaining rings.

TASK 28-25-05-404-042
3. Install the APU Fuel Line in the Left Auxiliary Fuel Tank (Fig. 401)
A. Consumable Materials
(1) G02353 Lubricant-Petrolatum, VV-P-236
B. References
(1) AMM 12-11-01/301, Fuel Tank Pressure Fueling
(2) AMM 20-10-21/601, Electrical Bonding
(3) AMM 28-11-00/201, Fuel Tanks
(4) AMM 28-11-02/401, Auxiliary Tank Access Doors
(5) AMM 28-22-07/401, Fuel Lines and Fittings
(6) AMM 28-25-00/501, APU Fuel Feed
C. Access
(1) Location Zone
531 Center Auxiliary Tank (Left)

(2) Access Panel
531BB Auxiliary Tank Access Door (Left)

D. Procedure

S 434-043
(1) Install new retaining rings in the couplings.

S 644-044
(2) Lubricate the new O-rings with petrolatum.

S 434-115
(3) Put the O-rings in the groove of the couplings.

S 944-116

WARNING: OBEY THE PURGING AND FUEL TANK ENTRY PRECAUTIONS. FAILURE TO OBEY THE PRECAUTIONS COULD CAUSE INJURY TO PERSONS OR DAMAGE TO EQUIPMENT.

(4) Obey the Purging and Fuel Tank Entry precautions (AMM 28-11-00/201).

S 014-117
(5) Go into the left auxiliary fuel tank.

S 434-118
(6) Loosely connect the clamps that hold the APU fuel line to the structure or support brackets.

BOEING PROPRIETARY - Copyright (C) - Unpublished Work - See title page for details.

S 434-045

CAUTION: DO NOT USE TOOLS TO TIGHTEN THE FUEL LINE FITTINGS. DAMAGE TO THE FITTING COMPONENTS COULD OCCUR OR THE ADJACENT FITTINGS COULD LOOSEN.

(7) Install the flexible full couplings, flexible half couplings and fittings to connect the APU fuel line (AMM 28-22-07/401).

S 434-046
(8) Install the support brackets to the structure with bolts, washers, and nuts.

S 434-047
(9) Tighten the clamps on the APU fuel line.

S 434-048
(10) Install the bolts, washers and nuts to connect the bonding jumpers between APU fuel line and the support brackets.

S 224-049
(11) Make sure the bonding resistance between the bonding jumper and the airplane structure is not more than 0.010 ohms (AMM 20-10-21/601).

S 714-050
(12) Do a check on the APU fuel line for leaks (AMM 28-25-00/501).

S 414-051
(13) Install the auxiliary tank access door, 531BB (AMM 28-11-02/401).

S 864-052
(14) Remove the DO-NOT-CLOSE tags and close these circuit breakers:
(a) On the overhead circuit breaker panel, P11:
1) 11B36, APU START
2) 11D34, FUEL DC PUMP PWR
3) 11D35, FUEL DC PUMP CONT
4) 11M25, FUEL PUMPS L FWD R AFT
(b) On the main power distribution panel, P6:
1) 6E3, APU FUEL VALVES

S 654-120
(15) Refuel the auxiliary fuel tank if no more work is necessary (AMM 12-11-01/301).

BOEING PROPRIETARY - Copyright (C) - Unpublished Work - See title page for details.

TASK 28-25-05-004-011

4. Remove the APU Fuel Line in the Center Auxiliary Fuel Tank (Fig. 402)

A. Equipment

(1) Container - for use with fuel, commercially available.

B. References

(1) AMM 06-41-00/201, Fuselage Access Doors and Panels
(2) AMM 28-11-00/201, Fuel Tanks
(3) AMM 28-11-02/401, Auxiliary Tank Access Doors
(4) AMM 28-22-07/401, Fuel Lines and Fittings
(5) AMM 28-26-00/201, Defueling

C. Access

(1) Location Zones

136 Environmental Control System Bay (Right)
194 Wing to Body - Forward Lower Half (Right)

(2) Access Panels

136KZ Auxiliary Tank Access Door (Center)
194HR Pressure Relief Door (Right)

D. Procedure

S 654-197

(1) Defuel the auxiliary fuel tank (AMM 28-26-00/201).

S 014-012

(2) Open the right pressure relief door, 194HR (AMM 06-41-00/201).

S 014-013

(3) Remove the center auxiliary tank access door, 136KZ (AMM 28-11-02/401).

S 944-096

WARNING: OBEY THE PURGING AND FUEL TANK ENTRY PRECAUTIONS. FAILURE TO OBEY THE PRECAUTIONS COULD CAUSE INJURY TO PERSONS OR DAMAGE TO EQUIPMENT.

(4) Do the Purging and Fuel Tank entry procedures (AMM 28-11-00/201).

BOEING PROPRIETARY - Copyright (C) - Unpublished Work - See title page for details.

S 014-017
(5) Remove the baffle doors when it is necessary from the center auxiliary fuel tank (AMM 28-11-02/401).

S 864-020
(6) Open these circuit breakers and attach DO-NOT-CLOSE tags:
(a) On the overhead circuit breaker panel, P11:
1) 11B36, APU START
2) 11D34, FUEL DC PUMP PWR
3) 11D35, FUEL DC PUMP CONT
4) 11M25, FUEL PUMPS L FWD R AFT
(b) On the main power distribution panel, P6:
1) 6E3, APU FUEL VALVES

S 014-097
(7) Go into the center auxiliary fuel tank.

S 024-098
(8) Remove the flexible half couplings at the side of the body rib and the upper surface of the center auxiliary fuel tank to disconnect the APU fuel line (View B) (AMM 28-22-07/401).

S 654-022
(9) Drain all remaining fuel in the APU fuel line into a container.

S 034-023
(10) Remove the bonding jumpers and clamps from the APU fuel line (View E).

S 034-024
(11) Disconnect the clamps from the structure and support brackets.

S 024-099
(12) Remove the APU fuel line and clamps.

BOEING PROPRIETARY - Copyright (C) - Unpublished Work - See title page for details.

S 034-055
(13) Discard all the O-rings and the retaining rings.

TASK 28-25-05-404-058

5. Install the APU Fuel Line in the Center Auxiliary Fuel Tank (Fig. 402).
   A. Consumable Materials
      (1) G02353 Lubricant-Petrolatum, VV-P-236
   B. References
      (1) AMM 06-41-00/201, Fuselage Access Doors and Panels
      (2) AMM 12-11-01/301, Fuel Tank Pressure Fueling
      (3) AMM 20-10-21/601, Electrical Bonding
      (4) AMM 28-11-00/201, Fuel Tanks
      (5) AMM 28-11-02/401, Auxiliary Tank Access Door
      (6) AMM 28-22-07/401, Fuel Lines and Fittings
      (7) AMM 28-25-00/501, APU Fuel Feed
   C. Access
      (1) Location Zones
          136 Environmental Control System Bay (Right)
          194 Wing to Body - Forward Lower Half (Right)

      (2) Access Panels
          136KZ Auxiliary Tank Access Door (Center)
          194HR Pressure Relief Door (Right)

   D. Procedure

      S 644-128
      (1) Lubricate the new O-rings with petrolatum.

      S 434-129
      (2) Install the new O-rings and new retaining rings in the flexible half couplings.

      S 944-130

      WARNING: OBEY THE PURGING AND FUEL TANK ENTRY PRECAUTIONS. FAILURE TO OBEY THE PRECAUTIONS COULD CAUSE INJURY TO PERSONS OR DAMAGE TO EQUIPMENT.

      (3) Obey the Purging and Fuel Tank Entry Precautions (AMM 28-11-00/201).

BOEING PROPRIETARY - Copyright (C) - Unpublished Work - See title page for details.

S 014-131
(4) Go into the center auxiliary fuel tank.

S 434-132
(5) Loosely connect the clamps that hold the APU fuel line to the support brackets or the structure (View E).

S 424-059

CAUTION: DO NOT USE TOOLS TO TIGHTEN THE FUEL LINE FITTINGS. DAMAGE TO THE FITTING COMPONENTS COULD OCCUR OR THE ADJACENT FITTINGS COULD LOOSEN.

(6) Install the half flexible couplings at the side of body rib and the upper surface of the center auxiliary fuel tank to connect the APU fuel line (View B) (AMM 28-22-07/401).

S 434-060
(7) Install the support brackets with bolts, washers and nuts (View E).

S 434-061
(8) Install the bolts, washers and nuts to attach the bonding jumpers between the support brackets and the APU fuel lines.

S 434-133
(9) Tighten the clamps on the APU fuel line.

S 224-062
(10) Make sure the bonding resistance between the bonding jumper and the airplane structure is not more than 0.010 ohms (AMM 20-10-21/601).

S 714-063
(11) Do a check on the APU fuel line for leaks (AMM 28-25-00/501).

S 864-064
(12) Remove the DO-NOT-CLOSE tags and close these circuit breakers:
(a) On the main power distribution panel, P6:
1) 6E3, APU FUEL VALVES
(b) On the overhead circuit breaker panel, P11:
1) 11B36, APU START

BOEING PROPRIETARY - Copyright (C) - Unpublished Work - See title page for details.

2) 11D34, FUEL DC PUMP PWR
3) 11D35, FUEL DC PUMP CONT
4) 11M25, FUEL PUMPS L FWD R AFT

S 414-069
(13) Install the baffle doors in the center auxiliary fuel tank (AMM 28-11-02/401).

S 414-071
(14) Install the center auxiliary tank access door, 136KZ (AMM 28-11-02/401).

S 414-134
(15) Close the right pressure relief door, 196HR (AMM 06-41-00/201).

S 654-135
(16) Refuel the auxiliary fuel tank if no more work is necessary (AMM 12-11-01/301).

TASK 28-25-05-004-189

6. Remove the APU Fuel Line and Shroud Between the Center Compartment of the Auxiliary Fuel Tank and the Pressure Bulkhead for the Aft Cargo Compartment

A. Equipment
(1) Cord - to pull the APU fuel line through the shroud, commercially available.
(2) Container - for use with fuel, commercially available.

B. References
(1) AMM 25-27-01/401, Floor Covering
(2) AMM 25-52-02/401, Ceiling Panels
(3) AMM 53-01-01/401, Floor Panels

C. Access
(1) Location Zones
133 Wing Center Section (Left)
141 Area Above Left MLG Wheel Well
151 Area Forward of Aft Cargo Compartment (Left)
153 Aft Cargo Compartment (Left)
161 Bulk Cargo Compartment (Left)
241 Passenger Cabin - Section 45 (Left)
251 Passenger Cabin - Section 46 (Left)

BOEING PROPRIETARY - Copyright (C) - Unpublished Work - See title page for details.

D. Procedure

S 014-190
(1) To get access to the APU fuel line and shroud above the center compartment, do the steps that follow:
(a) Start approximately 2 to 4 feet aft of the overwing escape hatch and remove approximately 10 feet aft of the left aisle carpets (AMM 25-27-01/401).
(b) Remove the passenger floor panels in that area (AMM 53-01-01/401).

S 014-025
(2) Remove the ceiling panels in the aft cargo compartment to get access to the APU fuel line and shroud (AMM 25-52-02/401).

S 864-026
(3) Open these circuit breakers and attach DO-NOT-CLOSE tags:
(a) On the overhead circuit breaker panel, P11:
1) 11B36, APU START
2) 11D34, FUEL DC PUMP PWR
3) 11D35, FUEL DC PUMP CONT
4) 11M25, FUEL PUMPS L FWD R AFT
(b) On the main power distribution panel, P6:
1) 6E3, APU FUEL VALVES

S 034-028
(4) Remove the bonding jumper at the APU fuel line and shroud connection above the center compartment (View C, Fig. 402).

S 024-029
(5) Loosen the shroud connection at the center compartment.

S 024-100
(6) Pull the shroud away from the flexible APU fuel line connection.

S 494-030
(7) Put a container below the APU shroud drain to collect the fuel remaining in the flexible APU fuel line.

BOEING PROPRIETARY - Copyright (C) - Unpublished Work - See title page for details.

S 024-031
(8) Disconnect the APU fuel line at the center compartment.

S 024-032
(9) At the pressure bulkhead for the aft cargo compartment, loosen the shroud connection from the bulkhead fitting (View A, Fig. 403).

S 024-101
(10) Pull the shroud away from the APU fuel line connection.

S 024-033
(11) Disconnect the APU fuel line.

S 654-102
(12) Drain all the fuel that remains in the APU fuel line into a container.

S 494-103
(13) Attach a cord to the end of the APU fuel line you will remove.

NOTE: This makes it easier to install a new APU fuel line.

S 024-104
(14) If you do not install a new shroud, remove the APU fuel line from the shroud.

S 024-056
(15) Disconnect couplings that attach the sections of the shroud together (View D, Fig. 402).

S 034-034
(16) Remove the bonding jumpers and clamps from the shroud (View E, Fig. 402).

S 034-035
(17) Disconnect the shroud clamps from the structure.

BOEING PROPRIETARY - Copyright (C) - Unpublished Work - See title page for details.

S 024-105
(18) Remove the shroud in parts.

TASK 28-25-05-404-106
7. Install the APU Fuel Line and Shroud Between the Center Compartment of the Auxiliary Fuel Tank and the Pressure Bulkhead for the Aft Cargo Compartment
A. Consumable Materials
(1) G02353 Lubricant-Petrolatum, VV-P-236
B. References
(1) AMM 20-10-21/601, Electrical Bonding
(2) AMM 25-27-01/401, Floor Covering
(3) AMM 25-52-02/401, Ceiling Panels
(4) AMM 28-22-07/401, Fuel Lines and Fittings
(5) AMM 28-25-00/501, APU Fuel Feed System
(6) AMM 53-01-01/401, Floor Panels
C. Access
(1) Location Zones
133 Wing Center Section (Left)
141 Area Above Left MLG Wheel Well
151 Area Forward of Aft Cargo Compartment (Left)
153 Aft Cargo Compartment (Left)
161 Bulk Cargo Compartment (Left)
241 Passenger Cabin - Section 45 (Left)
251 Passenger Cabin - Section 46 (Left)

D. Procedure

S 424-072
(1) Start at the front and install the shroud in parts.
(a) Loosely attach the clamps to the parts of the shroud (View E, Fig. 402).

S 824-194
(2) Align the parts of the shroud.

BOEING PROPRIETARY - Copyright (C) - Unpublished Work - See title page for details.

S 644-195
(3) Lubricate the new O-rings on the couplings with petrolatum.

S 424-196
(4) Connect the couplings to attach the shroud (AMM 28-22-07/401).

S 494-073
(5) Attach the cord (if installed in shroud during removal) to the flexible APU fuel line.

S 424-192
(6) Pull or push the flexible APU fuel line into the shroud.

S 424-074
(7) Connect the flexible APU fuel line at the center compartment (View C, Fig. 402).

S 424-139
(8) Connect the flexible APU fuel line at the bulkhead fitting (View A, Fig. 403).

S 714-075
(9) Do a check on the APU fuel line for leaks (AMM 28-25-00/501).

S 424-076
(10) Connect the shroud at the center compartment (View C, Fig. 402).

S 424-140
(11) Connect the shroud at the bulkhead fitting (View A, Fig. 403).

S 434-077
(12) Tighten the clamps on the APU fuel line shroud (View E, Fig. 402).

S 734-193
(13) Do the System Test for the APU Shroud and the APU Shroud Drain (AMM 28-25-00/501).

S 434-078
(14) Connect the bonding jumpers on the APU fuel line and shroud (View E, Fig. 402).

S 224-079
(15) Make sure the bonding resistance between the bonding jumper and the airplane structure is not more than 0.010 ohms (AMM 20-10-21/601).

S 864-080
(16) Remove the DO-NOT-CLOSE tags and close these circuit breakers:
(a) On the main power distribution panel, P6:
1) 6E3, APU FUEL VALVES

BOEING PROPRIETARY - Copyright (C) - Unpublished Work - See title page for details.

(b) On the overhead circuit breaker panel, P11:
1) 11B36, APU START
2) 11D34, FUEL DC PUMP PWR
3) 11D35, FUEL DC PUMP CONT
4) 11M25, FUEL PUMPS L FWD R AFT

S 414-082
(17) Install the ceiling panels in the aft cargo compartment (AMM 25-52-02/401).

S 414-083
(18) Install the passenger floor panels in the passenger compartment (AMM 53-01-01/401).

S 414-141
(19) Install the left aisle carpets (AMM 25-27-01/401).

TASK 28-25-05-004-036
8. Remove the APU Fuel Line and Shroud between the Pressure Bulkhead for the Bulk Cargo Compartment and the APU Firewall Bulkhead (Fig. 403)
A. References
(1) AMM 06-46-00/201, Entry, Service, and Cargo Doors Access Doors and Panels
B. Access
(1) Location Zones
161 Bulk Cargo Compartment (Left)
162 Bulk Cargo Compartment (Right)
311 Area Aft of Pressure Bulkhead to BS 1725 (Left)
312 Area Aft of Pressure Bulkhead to BS 1725 (Right)
315 APU Compartment (Left)
316 APU Compartment (Right)

(2) Access Panel
811 Bulk Cargo Door

C. Procedure

S 864-037
(1) Open these circuit breakers and attach DO-NOT-CLOSE tags:
(a) On the overhead circuit breaker panel, P11:
1) 11B36, APU START
2) 11D34, FUEL DC PUMP PWR
3) 11D35, FUEL DC PUMP CONT
4) 11M25, FUEL PUMPS L FWD R AFT

BOEING PROPRIETARY - Copyright (C) - Unpublished Work - See title page for details.

(b) On the main power distribution panel, P6:
1) 6E3, APU FUEL VALVES

S 014-107
(2) Open the bulk cargo door, 811 (AMM 06-46-00/201).

S 014-108
(3) Go into the bulk cargo compartment.

S 024-109
(4) Disconnect the shroud at the bulkhead fitting (View A).

S 024-110
(5) Pull the shroud away from the pressure bulkhead.

S 024-111
(6) Disconnect the APU fuel line at the pressure bulkhead.

S 024-112
(7) Disconnect the shroud at the APU firewall bulkhead (View B).

S 024-113
(8) Pull the shroud away from the pressure bulkhead.

S 024-114
(9) Disconnect the APU fuel line at the APU firewall bulkhead.

S 034-039
(10) Remove the bonding jumpers and clamps from the shroud.

S 034-057
(11) Disconnect the clamps from the structure.

S 024-040
(12) Remove the shroud and the APU fuel line in sections.

S 024-041
(13) Remove the APU fuel line from the shroud.

BOEING PROPRIETARY - Copyright (C) - Unpublished Work - See title page for details.

TASK 28-25-05-404-084

9. Install the APU Fuel Line and Shroud Between the Pressure Bulkhead for the Bulk Cargo Compartment and the APU Firewall Bulkhead (Fig. 403)

A. References

(1) AMM 06-46-00/201, Entry, Service, and Cargo Doors - Access Doors and Panels

(2) AMM 20-10-21/601, Electrical Bonding

(3) AMM 28-25-00/501, APU Fuel Feed System

B. Access

(1) Location Zones

161 Bulk Cargo Compartment (Left)
162 Bulk Cargo Compartment (Right)
311 Area Aft of Pressure Bulkhead to BS 1725 (Left)
312 Area Aft of Pressure Bulkhead to BS 1725 (Right)
315 APU Compartment (Left)
316 APU Compartment (Right)

(2) Access Panel

811 Bulk Cargo Door

C. Procedure

S 434-142

(1) Loosely connect the clamps to the APU fuel line and shroud.

S 424-143

(2) Connect the APU fuel line at the pressure bulkhead (View A).

S 424-144

(3) Connect the APU fuel line at the APU firewall bulkhead (View B).

S 714-085

(4) Do a check on the APU fuel line for leaks (AMM 28-25-00/501).

S 424-086

(5) Connect the shroud at the pressure bulkhead (View A).

BOEING PROPRIETARY - Copyright (C) - Unpublished Work - See title page for details.

S 424-145
(6) Connect the shroud at the APU firewall bulkhead (View B).

S 434-087
(7) Tighten all the clamps on the shroud.

S 434-088
(8) Connect the bonding jumpers to the shroud.

S 224-089
(9) Make sure the bonding resistance between the bonding jumper and the airplane structure is not more than 0.010 ohms (AMM 20-10-21/601).

S 864-090
(10) Remove the DO-NOT-CLOSE tags and close these circuit breakers:
- (a) On the main power distribution panel, P6:
  - 1) 6E3, APU FUEL VALVES
- (b) On the overhead circuit breaker panel, P11:
  - 1) 11B36, APU START
  - 2) 11D34, FUEL DC PUMP PWR
  - 3) 11D35, FUEL DC PUMP CONT
  - 4) 11M25, FUEL PUMPS L FWD R AFT

S 414-146
(11) Close the bulk cargo door, 811 (AMM 06-46-00/201).

BOEING PROPRIETARY - Copyright (C) - Unpublished Work - See title page for details.

DEFUELING - DESCRIPTION AND OPERATION

1. General (Fig. 1)
   A. Defueling
      (1) The defueling system has a defueling valve in each main fuel tank that connects the engine fuel-feed manifold to the fueling manifold. Fuel extraction takes place at the fueling station from the fueling adapters (AMM 28-21-00/001).
      (2) Pressure defueling and suction defueling supply the means for defueling the fuel tanks. A boost pump bypass line connects each main fuel tank to the engine fuel-feed manifold. Suction defueling draws fuel through the boost pump bypass line into the engine fuel feed manifold and the fueling manifold to the fueling adapters. Pressure defueling uses the boost pumps to pump the fuel out of the tanks.
      (3) Pressure defueling and suction defueling are possible only when the airplane is on the ground. The fueling station controls defueling.
      (4) SAS 150, 152-154 POST-SB 28-27;
          SAS 050-149, 155-999;
          MTH 275 POST-SB 28-27;
          MTH 277-999;
          Airborne fuel jettison is possible (AMM 28-31-00/001).
   B. Tank-To-Tank Fuel Transfer
      (1) Defueling of a fuel tank by transferring the fuel to the other fuel tank requires use of the defueling valves, fueling valves and the fuel boost pumps (AMM 28-22-00/001).
      (2) Only on-ground tank-to-tank fuel transfer is possible.
   C. The override pumps cannot be operated with less than 1000 pounds (453 kilograms) per AD 97-19-15. This restriction applies to airplanes that have one or more override pumps that have inlet diffusers attached by screws (P/N S343T002-5, -8, -12, -15). SB 28-52 and SB 28-62 replace these pumps with pumps that either have no diffusers or have a cast-in inlet diffuser. When all the pumps are replaced with new or modified pumps (P/N S343T002-23 or higher dash number) there is no minimum fuel restriction. Do not use JP4 or JET-B fuel after the new or modified override pump is installed.
2. Component Details
   A. Defueling Valve (Fig. 2)
      (1) Description
         (a) The defueling valve, a motor actuated ball valve, operates on 28v dc power. A defueling valve attaches to the rear spar of each fuel tank. The valve body (within the fuel tank) attaches to the actuator (outside the fuel tank) by an adapter shaft. Access to the valve body requires defueling.
         (b) The actuator has a dc drive motor, an electrical connector, open-closed limit switches, and a manual override handle which also functions as a position indicator.

BOEING PROPRIETARY - Copyright (C) - Unpublished Work - See title page for details.

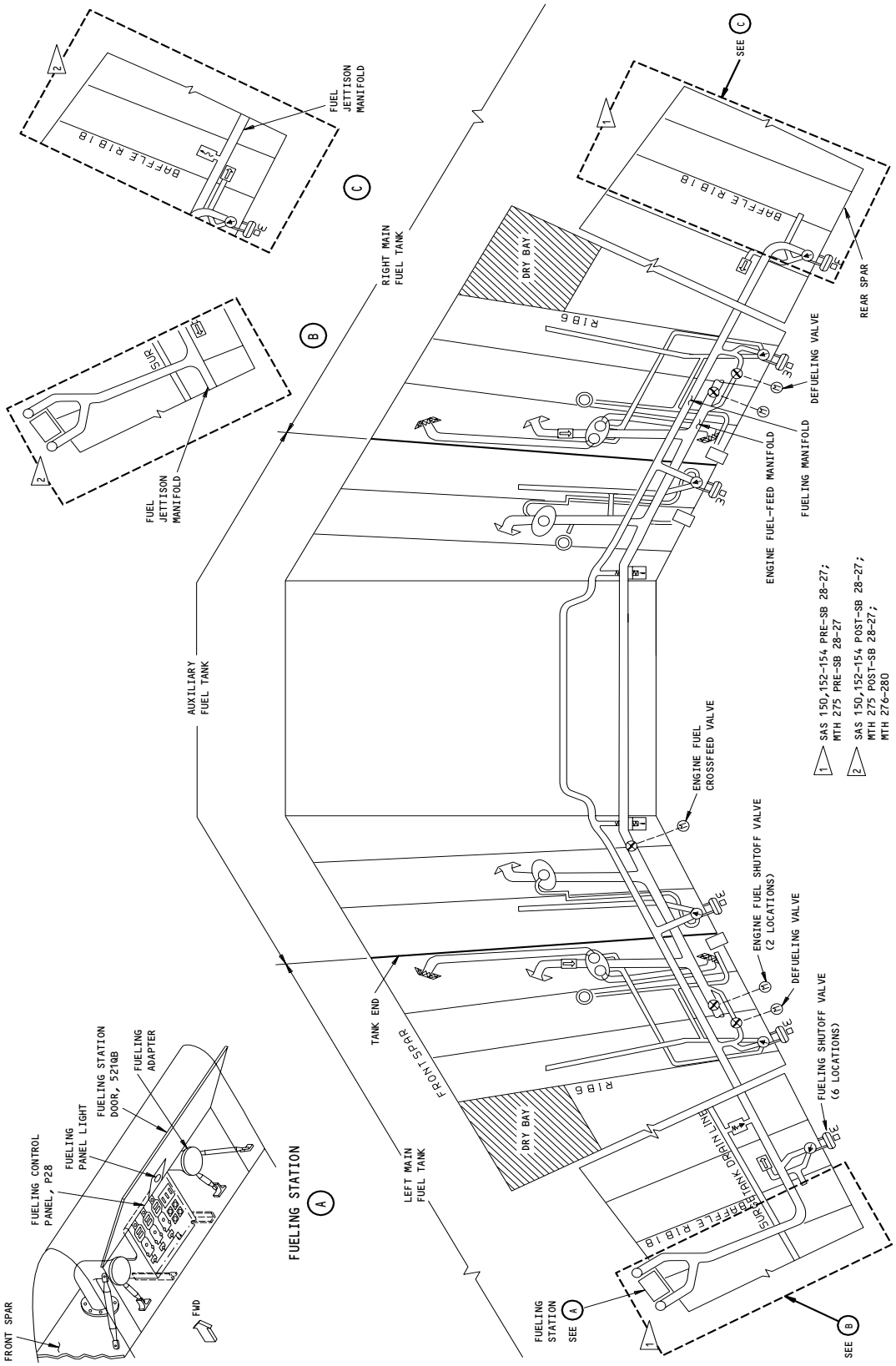

Defueling System
Figure 1 (Sheet 1)

669845

BOEING PROPRIETARY - Copyright (C) - Unpublished Work - See title page for details.

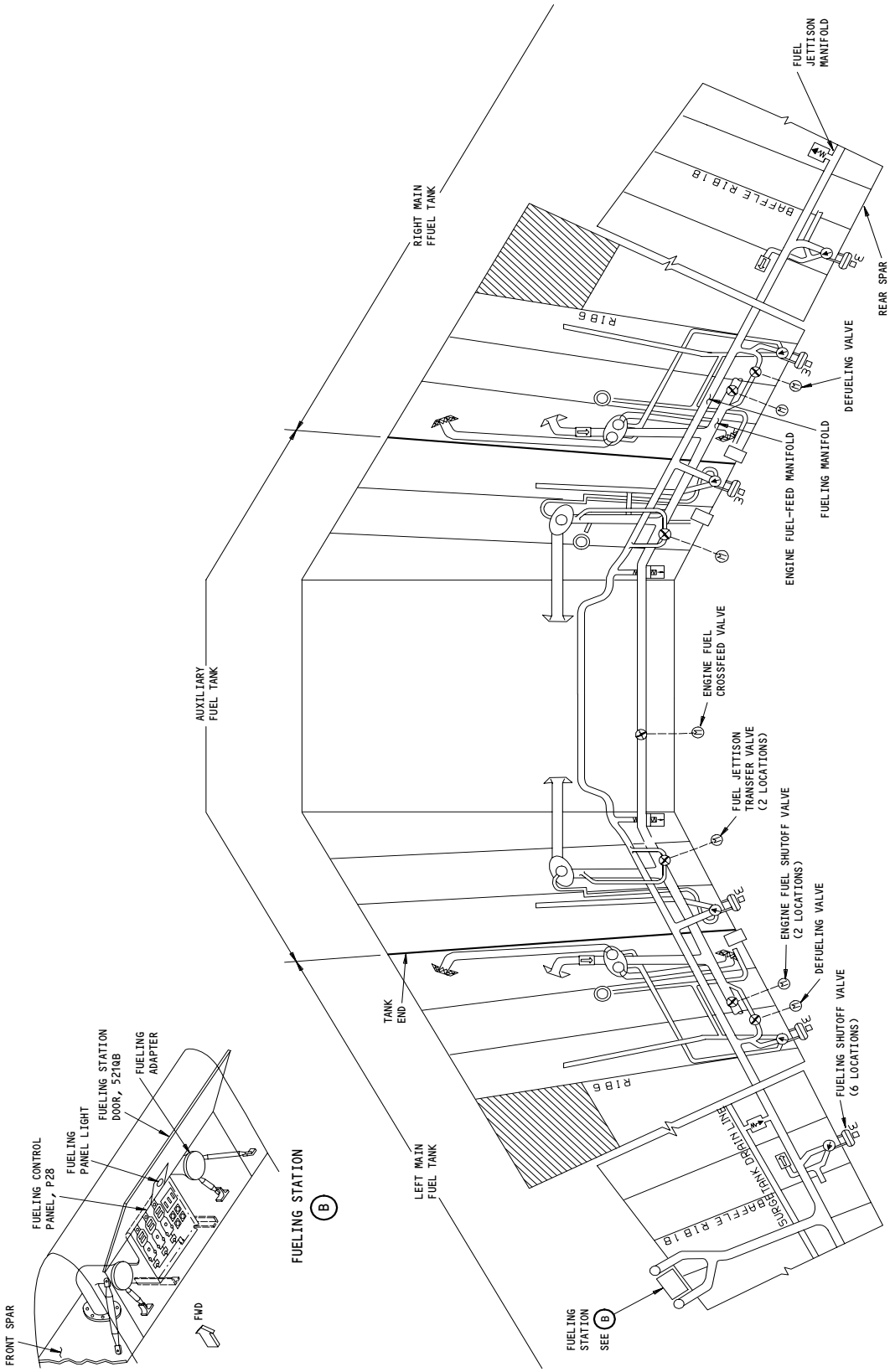

Defueling System
Figure 1 (Sheet 2)

BOEING PROPRIETARY - Copyright (C) - Unpublished Work - See title page for details.

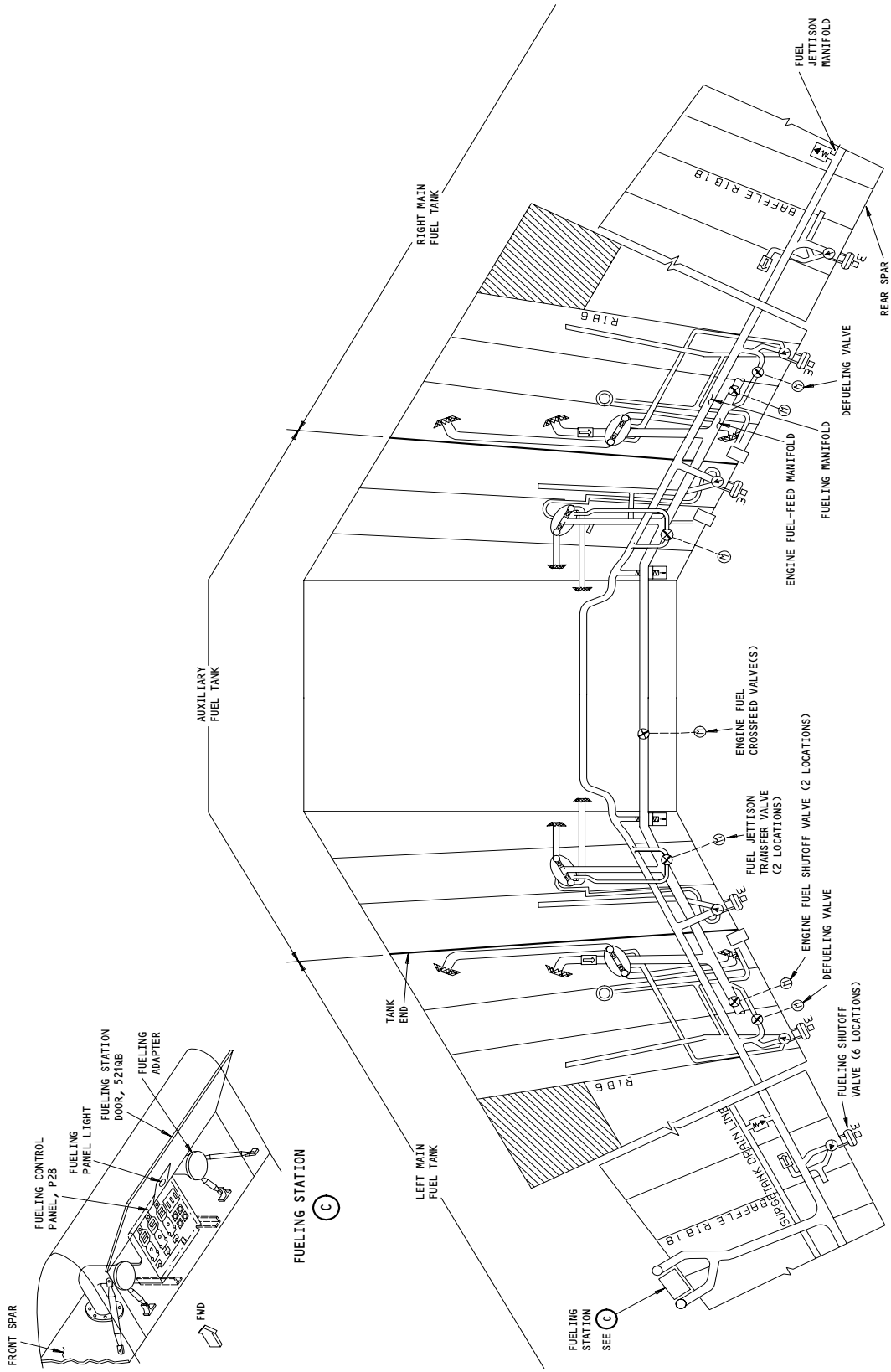

Defueling System
Figure 1 (Sheet 3)

724269

BOEING PROPRIETARY - Copyright (C) - Unpublished Work - See title page for details.

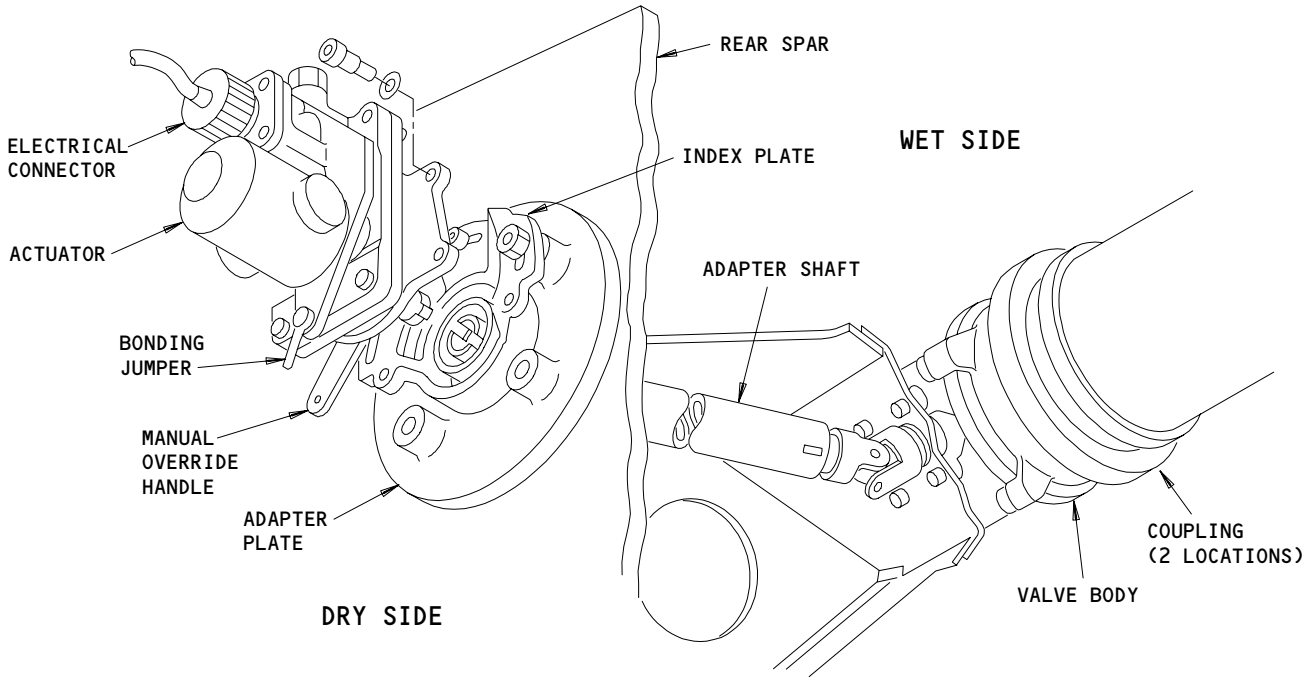

Defueling Valve
Figure 2

BOEING PROPRIETARY - Copyright (C) - Unpublished Work - See title page for details.

(c) The adapter shaft supplies an extension between the actuator and the valve. The adapter shaft has an adapter plate and a shaft with a universal joint. The adapter shaft, with indexed splines in both ends, makes sure there is correct alignment of the actuator to the valve. Access to the adapter shaft requires defueling.

(d) Two integral thermal relief valves, ported to the tank side of the valve, crack and reseat between 70 and 55 psig.

(2) Function

(a) Applying 28v dc power opens or closes the valve, depending upon the command. The adapter shaft engages the body shaft which inserts into the ball slot. During an open command the adapter shaft rotates turning the ball within the valve body to allow fuel to flow through the ball. Upon reaching the full open position, the actuator open limit switch closes to shut off the actuator. During a close command the adapter shaft rotates, thus turning the ball to prevent fuel flow through the ball. Upon reaching the full closed position, the actuator closed limit switch closes to shut off the actuator.

(b) The defueling valve position determines whether the fueling manifold is connected to the engine fuel-feed manifold.

3. Operation (Fig. 3)

A. Functional Description

(1) Defueling

(a) Pressure Defueling

1) For pressure defueling, the fuel system must be configured as follows:

a) At least one boost pump for the tank being defueled must be on (AMM 28-22-00/001).

b) For left or right main tank defueling, open the defueling valve of tank being defueled.

c) For auxiliary fuel tank defueling, open either the left or right main tank defueling valve.

d) The fueling adapters must be in the defuel mode before connecting the fueling nozzles (AMM 28-21-00/001).

(b) Suction Defueling

1) Suction defueling requires a configuration of the fuel system similar to pressure defueling except that the boost pumps for the tank being defueled must be off.

(c) Tank-To-Tank Fuel Transfer

1) For transfer of fuel between tanks, the fuel system must be configured as follows:

a) At least one boost pump in the supplier tank must be operating.

BOEING PROPRIETARY - Copyright (C) - Unpublished Work - See title page for details.

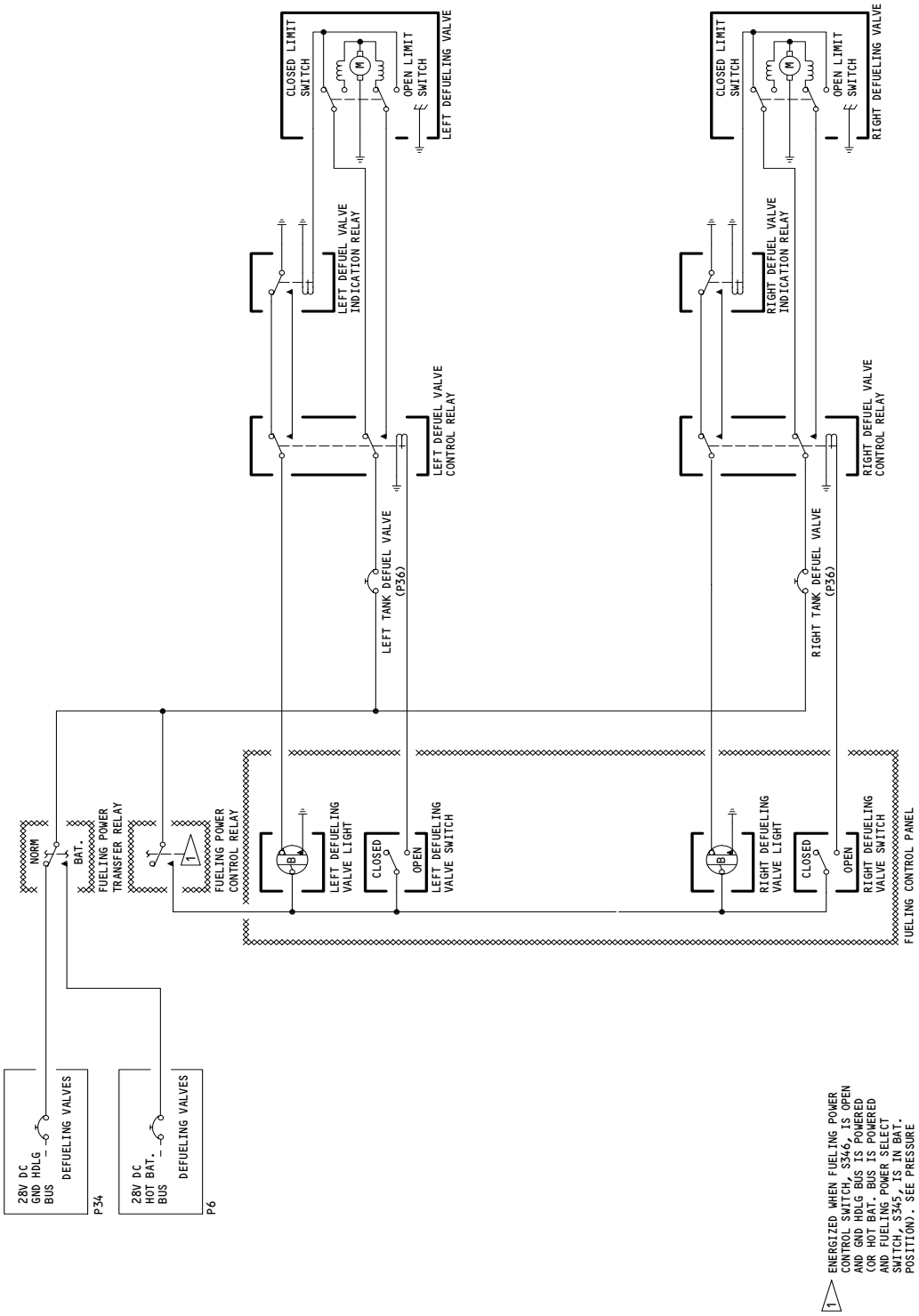

Defueling System Schematic
Figure 3

BOEING PROPRIETARY - Copyright (C) - Unpublished Work - See title page for details.

b) When transferring fuel into a main tank, open the defueling valve for either the supplier or receiving tank.
c) When transferring fuel into the center tank, open the defueling valve for the supplier tank.
d) When transferring fuel to opposite side of the airplane, the crossfeed valve must be open.
e) The receiving tank pressure fueling shutoff valves must be open.

(d) If the defueling valve for the fuel tank being defueled (any method) fails closed and cannot be manually opened, opening the crossfeed valve and the defueling valve of the opposite fuel tank still permits defueling.

(e) The fuel quantity indicating system (AMM 28-41-00/001) lets you monitor defueling.

(2) Defueling Valve Operation

(a) Switches at the fueling station control the defueling valves. The ground handling bus or the hot battery bus supplies 28v dc power. Opening the fueling station door energizes the fueling power control relay. Twenty-eight volt DC power passes through the fueling power control relay to the defuel valve switch. If the switch is OPEN, 28v dc power passes through the switch to energize the defuel valve control relay. The defueling valve actuator receives 28v dc power through the defuel valve control relay to open the defueling valve.

(b) The defuel valve control relay relaxes with the defuel valve switch closed. The relaxed valve control relay supplies a direct path for 28v dc power to the defueling valve actuator to close the defueling valve. Inadvertently closing the fueling station door before switching the defueling valve CLOSED creates the necessary condition for the direct flow of 28v dc power to the defueling valve actuator to close the defueling valve.

(3) Defueling Valve Indication

(a) A blue DEFUEL VALVE light on the fueling control panel shows the position of the defueling valve. When the defueling valve reaches full open, the limit switch directs 28v dc power to the defuel valve indication relay. Twenty-eight volt DC power passes through the energized defuel valve control relay. The DEFUEL VALVE light comes on when the defueling valve reaches full open. When the defueling valve reaches full closed, the limit switch directs 28v dc power to the defuel valve indication relay. The full closed valve shuts off the DEFUEL VALVE light.

B. Control

(1) Make sure the airplane and defueling truck are grounded.

(2) Supply electrical power (AMM 24-22-00/201).

BOEING PROPRIETARY - Copyright (C) - Unpublished Work - See title page for details.

(3) Pressure Defueling

(a) Make sure these circuit breakers are closed.

Name	Location
DEFUEL VALVES	P6
DEFLNG VALVES	P34
FUEL QTY 1	P11
FUEL QTY 2	P11
FUEL PUMPS L FWD/R AFT	P11
FUEL PUMPS R FWD/L AFT	P11
R AFT FUEL BOOST PUMP	P6
R FWD FUEL BOOST PUMP	P6
L AFT FUEL BOOST PUMP	P6
L FWD FUEL BOOST PUMP	P6
L CTR FUEL PUMPS	P11
R CTR FUEL PUMPS	P11
L FUEL OVRD PUMP	P6
R FUEL OVRD PUMP	P6
FUELING QTY	P6
FUEL QTY REFUEL	P34

(b) Open the fueling station door and make sure that the fueling panel light comes on. This shows the presence of 28 volts dc.

(c) Connect the ground cable at the fueling station.

(d) Set the fueling adapters to DEFUEL.

(e) Connect the fueling nozzles to either or both fueling adapters.

(f) Select the power source at the battery power switch on the fueling control panel.

(g) Do a test of the load select indicators by pushing the TEST IND switch; 88.8 should show on the top and bottom LCD displays.

(h) Do a test of the defueling valve indicator light by press-to-test.

(i) Set the defueling valve switches to DEFUEL. The blue indicator light should come on.

BOEING PROPRIETARY - Copyright (C) - Unpublished Work - See title page for details.

(j) FOR OVERRIDE PUMPS WITH A DIFFUSER INSTALLED (PN S343T002-5,-8,-12,-15), do these steps:

WARNING: DO NOT OPERATE THE LEFT OR RIGHT OVERRIDE (C) PUMPS IF THE FUEL QUANTITY IN THE AUXILIARY TANK IS BELOW 1000 POUNDS (453 KILOGRAMS). DRY FUEL PUMP OPERATION MAY CAUSE FUEL VAPORS IN THE TANK TO IGNITE DUE TO THE GENERATION OF SPARKS CAUSED BY METAL TO METAL CONTACT WITHIN THE FUEL PUMPS.

1) Make sure there is a minimum fuel quantity of 1000 pounds (453 kilograms) in the auxiliary tank.

WARNING: DO NOT OPERATE A FUEL PUMP IF THE LOW PRESSURE LIGHT COMES ON AND STAYS ON. FUEL VAPORS IN THE TANK MAY IGNITE AND CAUSE A FIRE OR EXPLOSION.

(k) To operate any of the fuel pumps, you must be in the flight compartment to continuously monitor the fuel quantity and the low pressure indication in the fuel tank.

1) Immediately set the applicable fuel pump switch to OFF if the LOW PRESSURE light comes on and stays on.

NOTE: When defueling or transferring fuel with minimum backpressure to the pumps, it is possible for the low pressure light(s) to come on. In this case, monitor tank quantity and set the pump switch to OFF if tank quantity is not changing.

(l) Set the applicable fuel boost pump switch or override pump switch on the overhead panel, P5, to ON. Defueling will begin.

(m) Monitor the load select indicators at the fueling station for the quantity of fuel in the fuel tanks.

(n) Set the applicable fuel boost pump switch or override pump switch to OFF when the necessary quantity of fuel has been unloaded. The defueling operation can be stopped at any time if you put the defueling valve switch to CLOSED.

BOEING PROPRIETARY - Copyright (C) - Unpublished Work - See title page for details.

(4) Suction Defueling

(a) Verify following circuit breakers are closed.

Name	Location
DEFUEL VALVES	P6
DEFLNG VALVES	P34
FUEL QTY 1	P11
FUEL QTY 2	P11
FUELING QTY	P6
FUEL QTY REFUEL	P34

(b) Open fuel station door and check that panel light illuminates indicating presence of 28 volt dc power.
(c) Connect grounding cable at fueling station.
(d) Set fueling adapters to DEFUEL.
(e) Connect fueling nozzles to either or both fueling adapters.
(f) Select power source at power select switch at fueling panel.
(g) Test load select indicators by pressing TEST IND switch; 88.8 should appear on upper and lower LCD displays.
(h) Test defueling valve indicator light by press-to-test.
(i) Set defueling valve switches to DEFUEL. The blue indicator light should illuminate.
(j) Start defueling truck. Defueling will commence.
(k) Watch load select indicators at fueling station for amount of fuel in tanks.
(l) Place defueling valve switch at fueling station in CLOSED position when required amount of fuel is unloaded.
(m) Stop defueling truck.

BOEING PROPRIETARY - Copyright (C) - Unpublished Work - See title page for details.

(5) Tank to Tank Transfer

(a) Make sure these circuit breakers are closed.

Name	Location
DEFUEL VALVES	P6
DEFLNG VALVES	P34
FUEL QTY 1	P11
FUEL QTY 2	P11
FUEL PUMP L FWD/R AFT	P11
FUEL PUMP R FWD/L AFT	P11
R AFT FUEL BOOST PUMP	P6
R FWD FUEL BOOST PUMP	P6
L AFT FUEL BOOST PUMP	P6
L FWD FUEL BOOST PUMP	P6
FLNG VALVES	P34
FLNG CONT	P34
FLNG VALVES	P6
FLNG CONT	P6
L CTR FUEL PUMPS	P11
R CTR FUEL PUMPS	P11
L FUEL OVRD PUMP	P6
R FUEL OVRD PUMP	P6

(b) Open the fueling station door.

(c) Select the power source at the battery power switch at the fueling control panel.

(d) Do a test of the load select indicators by pushing TEST IND switch; 88.8 should show on the top and botton LCD displays.

(e) Do a test of the fueling valve indicator light by press-to-test.

(f) Do a test of the defueling valve indicator light by press-to-test.

(g) Put the fueling valve switch of the receiving tank to FUEL.

BOEING PROPRIETARY - Copyright (C) - Unpublished Work - See title page for details.

(h) If defueling a main fuel tank, put the defueling valve switch of supplier tank to OPEN.
(i) If defueling the auxiliary fuel tank, put the defueling valve switch of receiving tank to OPEN.
(j) FOR OVERRIDE PUMPS WITH A DIFFUSER INSTALLED (PN S343T002-5,-8,-12,-15), do these steps:

WARNING: DO NOT OPERATE THE LEFT OR RIGHT OVERRIDE (C) PUMPS IF THE FUEL QUANTITY IN THE AUXILIARY TANK IS BELOW 1000 POUNDS (453 KILOGRAMS). DRY FUEL PUMP OPERATION MAY CAUSE FUEL VAPORS IN THE TANK TO IGNITE DUE TO THE GENERATION OF SPARKS CAUSED BY METAL TO METAL CONTACT WITHIN THE FUEL PUMPS.

1) Make sure there is a minimum fuel quantity of 1000 pounds (453 kilograms) in the auxiliary tank.

WARNING: DO NOT OPERATE A FUEL PUMP IF THE LOW PRESSURE LIGHT COMES ON AND STAYS ON. FUEL VAPORS IN THE TANK MAY IGNITE AND CAUSE A FIRE OR EXPLOSION.

(k) To operate any of the fuel pumps, you must be in the flight compartment to continuously monitor the fuel quantity and the low pressure indication in the fuel tank.
1) Immediately set the applicable fuel pump switch to OFF if the LOW PRESSURE light comes on and stays on.

NOTE: When defueling or transferring fuel with minimum backpressure to the pumps, it is possible for the low pressure light(s) to come on. In this case, monitor tank quantity and set the pump switch to OFF if tank quantity is not changing.

(l) Put the applicable fuel boost pump switch or override pump switch on the overhead panel, P5, to ON. Transfer will begin.
(m) Monitor the load select indicator for the quantity of fuel in the fuel tanks.
(n) Put the applicable fuel boost pump switch or override pump switch to OFF.
(o) Put the defueling valve switch at the fueling station to CLOSE.
(p) Put the fueling valve switch at the fueling station to OFF.

BOEING PROPRIETARY - Copyright (C) - Unpublished Work - See title page for details.

DEFUELING

COMPONENT	FIG. 102 SHT	QTY	ACCESS/AREA	AMM REFERENCE
ACTUATOR - LEFT DEFUELING VALVE, V108	2	1	551TB, REAR SPAR	28-26-11
ACTUATOR - RIGHT DEFUELING VALVE, V109	2	1	651TB, REAR SPAR	28-26-11
CIRCUIT BREAKER -	--		FLT COMPT, P6	
DEFUELING VALVES, C1044		1	6E7	*
CIRCUIT BREAKER -	--		119AL, MAIN EQUIP CTR, P34	
DEFUELING VALVE, C1042		1	34L4	*
LIGHT - LEFT MAIN DEFUEL VALVE, L67	2	1	521QB, FUELING STATION	28-26-00
LIGHT - RIGHT MAIN DEFUEL VALVE, L68	2	1	521QB, FUELING STATION	28-26-00
RELAY - (FIM 31-01-36/101)				
L DEFUEL VALVE CONT, K452				
L DEFUEL VALVE IND, K449				
R DEFUEL VALVE CONT, K453				
R DEFUEL VALVE IND, K450				
SWITCH - LEFT MAIN DEFUEL VALVE, S350	2	1	521QB, FUELING STATION	28-26-00
SWITCH - RIGHT MAIN DEFUEL VALVE, S351	2	1	521QB, FUELING STATION	28-26-00
VALVE - LEFT DEFUELING	2	1	532BB, LEFT MAIN FUEL TANK	28-26-01
VALVE - RIGHT DEFUELING	2	1	632BB, RIGHT MAIN FUEL TANK	28-26-01

* SEE THE WDM EQUIPMENT LIST

Defueling - Component Index
Figure 101

BOEING PROPRIETARY - Copyright (C) - Unpublished Work - See title page for details.

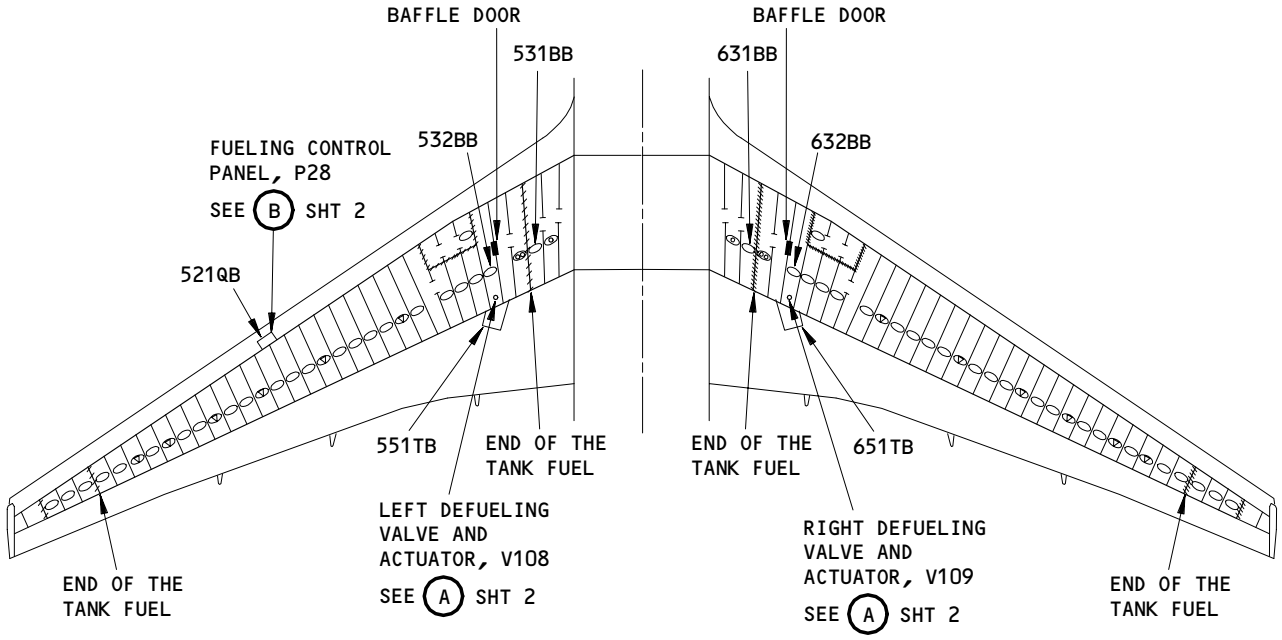

Defueling - Component Location
Figure 102 (Sheet 1)

BOEING PROPRIETARY - Copyright (C) - Unpublished Work - See title page for details.

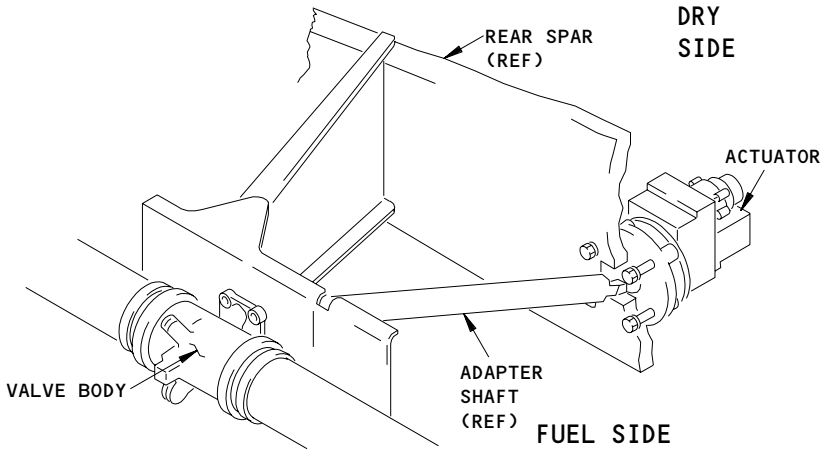

LEFT OR RIGHT DEFUELING VALVE AND ACTUATOR, V108 OR V109

A

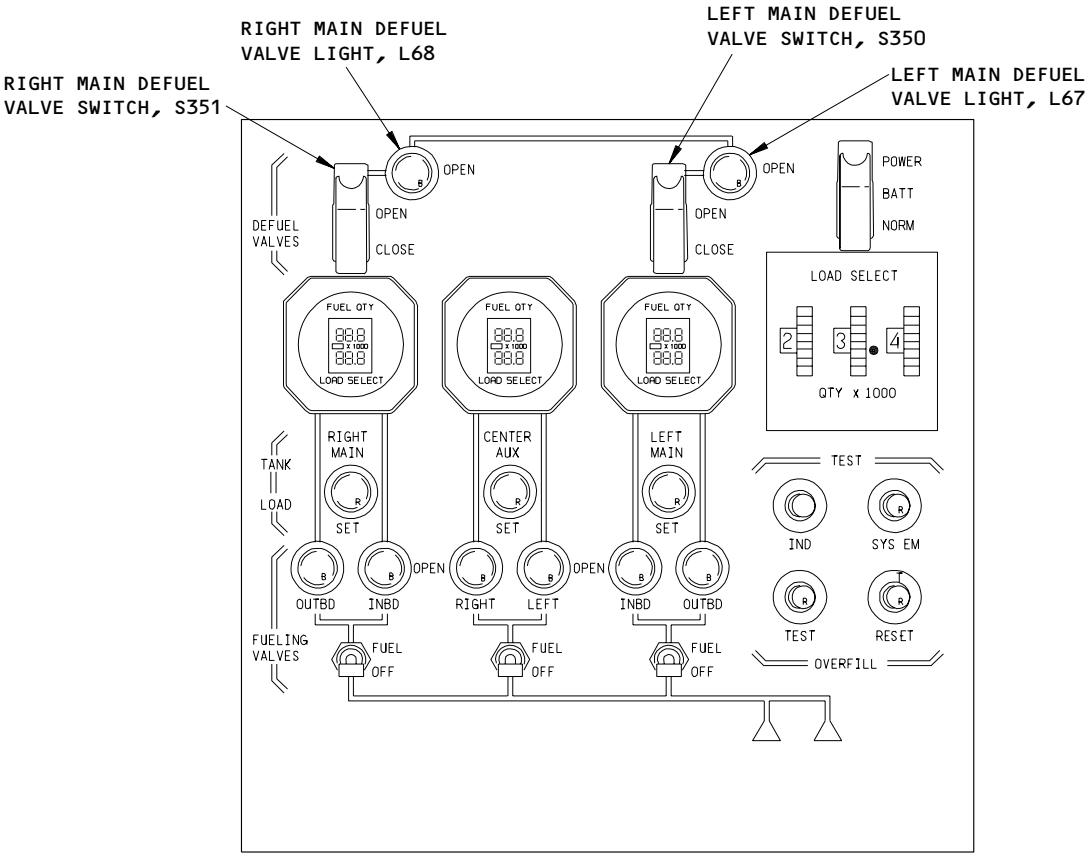

FUELING CONTROL PANEL, P28

B

Defueling - Component Location (Details from Sht 1)
Figure 102 (Sheet 2)

BOEING PROPRIETARY - Copyright (C) - Unpublished Work - See title page for details.

DEFUELING - MAINTENANCE PRACTICES

1. General
   A. This procedure contains four different procedures to defuel the fuel tank: pressure defueling, suction defueling, tank to tank transfer, and an optional procedure of defueling without electrical power.

      NOTE: A full wing fuel load imbalance is acceptable during ground maintenance.

      (1) The pressure defueling procedure uses the fuel boost pump or the override pump to remove fuel from the fuel tank. The fuel flows through the engine fuel-feed manifold, the defueling valve, the fueling manifold, and the fueling adapter into the fuel receptacle.

         NOTE: Pressure defueling the fuel tanks does not drain all of the fuel. A small quantity of fuel stays in each fuel tank as shown in the subsequent table.

FUEL TANK	FUEL REMAINING AFTER PRESSURE DEFUELING
L MAIN TANK	10 U.S. Gallons (38 liters) or less
R MAIN TANK	10 U.S. Gallons (38 liters) or less
AUX TANK	110 U.S. Gallons (416 liters)

      (2) The suction defueling procedure uses the fuel truck to remove the fuel from the fuel tank.
         (a) For the main fuel tanks, the suction from the fuel truck causes fuel from the main fuel tank to flow through the bypass valve of the fuel boost pump into the engine fuel-feed manifold. It then goes through the defueling valve, fueling manifold, and fueling adapter to the fuel truck.
         (b) The auxiliary fuel tank cannot be suction defueled.

            NOTE: Suction defueling of the main fuel tanks and the auxiliary fuel tank does not drain all of the fuel from the fuel tank. A small quantity of fuel stays in each fuel tank as shown in the subsequent table.

FUEL TANK	FUEL REMAINING AFTER SUCTION DEFUELING
L MAIN TANK	10 U.S. Gallons (38 liters) or less
R MAIN TANK	10 U.S. Gallons (38 liters) or less
AUX TANK	NOT APPLICABLE - PRESSURE DEFUELING IS THE ONLY PROCEDURE

BOEING PROPRIETARY - Copyright (C) - Unpublished Work - See title page for details.

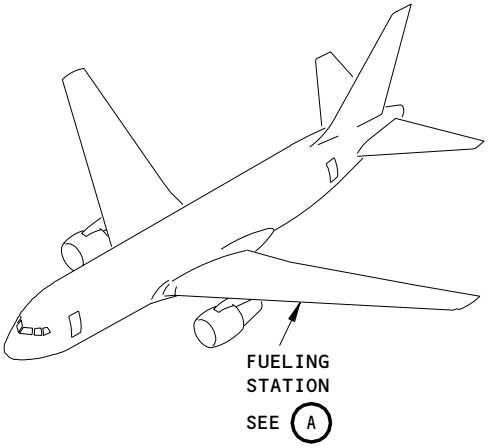

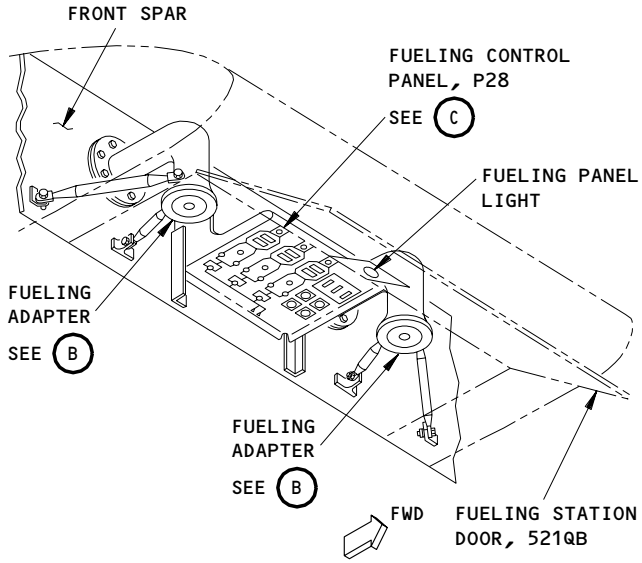

FUELING STATION

A

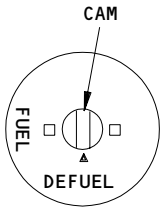

FUELING ADAPTER
(VIEW IN THE UP DIRECTION)

B

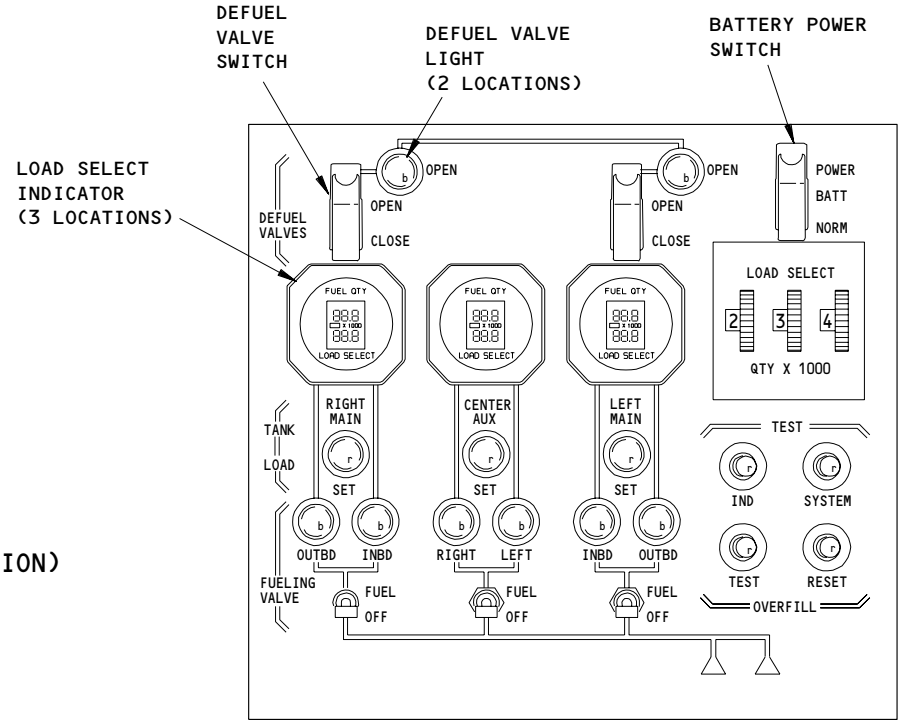

FUELING CONTROL PANEL, P28

C

Defueling - Fueling Station
Figure 201

BOEING PROPRIETARY - Copyright (C) - Unpublished Work - See title page for details.

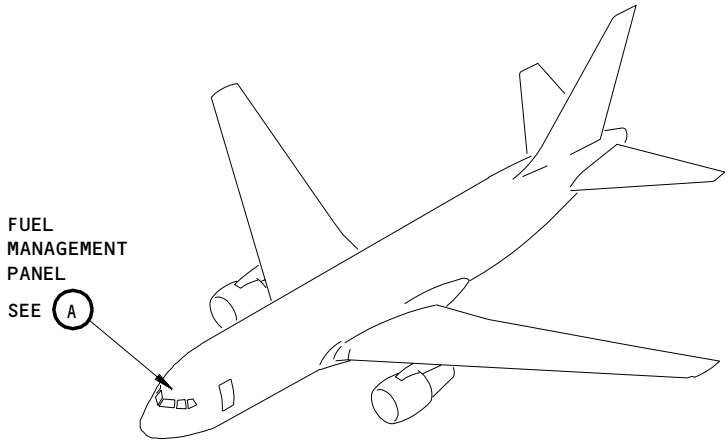

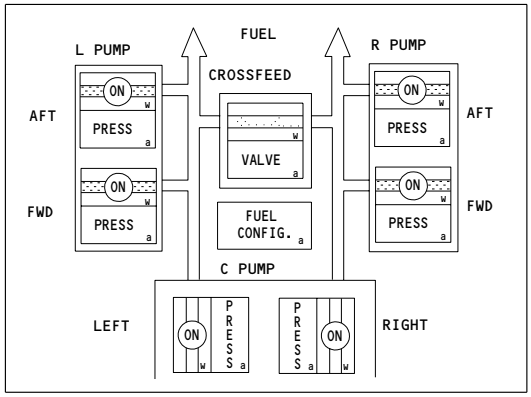

FUEL MANAGEMENT PANEL (ON THE P5 PANEL)

A 1

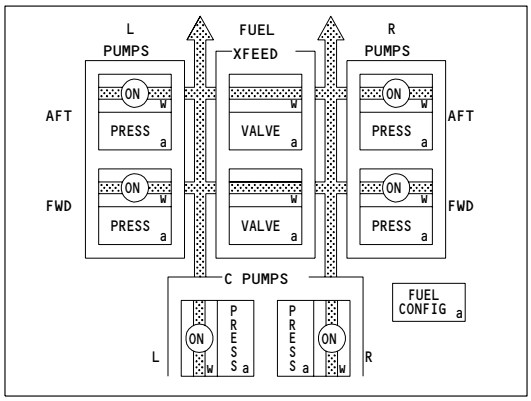

FUEL MANAGEMENT PANEL (ON THE P5 PANEL)

A 2

1 AIRPLANES WITH A SINGLE ENGINE FUEL CROSSFEED VALVE (PRE-SB 28-34)

2 AIRPLANES WITH FORWARD AND AFT ENGINE FUEL CROSSFEED VALVES (POST-SB 28-34 OR PRR12221)

Defueling - Flight Compartment
Figure 202

BOEING PROPRIETARY - Copyright (C) - Unpublished Work - See title page for details.

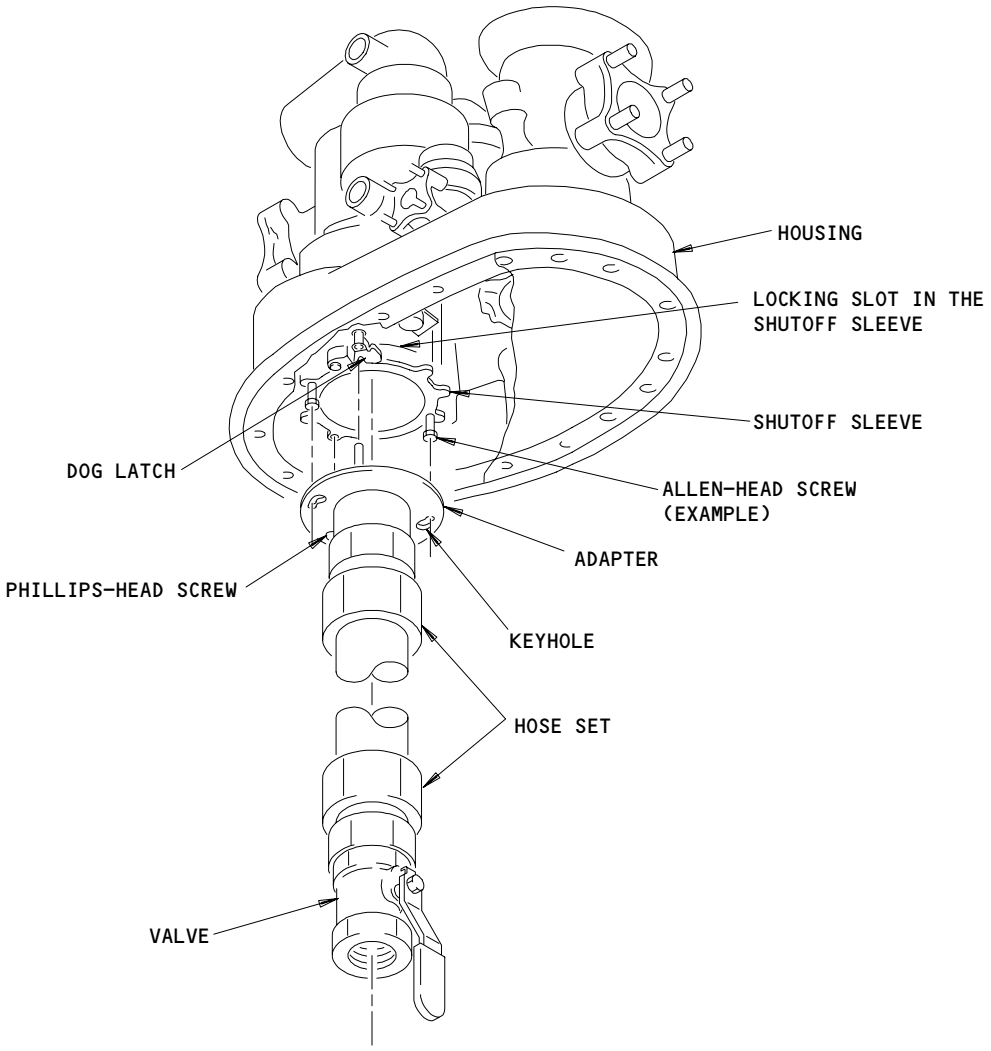

Defueling Without Electrical Power
Figure 203

BOEING PROPRIETARY - Copyright (C) - Unpublished Work - See title page for details.

(3) To defuel a fuel tank with the tank to tank transfer procedure it is necessary to use the defueling valves, fueling shutoff valves and the fuel boost pumps. To move the fuel between the fuel tanks, the fuel system must be in the subsequent configuration:
   (a) One fuel boost pump must operate in the fuel tank that supplies the fuel.
   (b) The defueling valve in the fuel tank that supplies the fuel must be open.
   (c) The fueling shutoff valve in the fuel tank that gets the fuel must be open.
(4) If you cannot open the defueling valve in the fuel tank you are defueling, open the engine fuel crossfeed valve and the defueling valve in the opposite fuel tank to do the defueling.
(5) The fuel quantity indicating system (AMM 28-41-00/001) lets you monitor the defueling at the fueling control panel.

B. If a fuel tank must be fully defueled, drain the remaining fuel through the sump drain valve (AMM 12-11-03/301).

NOTE: A full wing fuel load imbalance is acceptable during ground maintenance.

C. Make sure you do not have a Lateral Imbalance (LIM) when you do these procedures.
(1) Jacking:
   (a) Make sure you do not have a fuel LIM when you lift or lower the airplane with jacks. Do not transfer fuel while the airplane is on the jacks.
(2) Towing:
   (a) Make sure you do not have a fuel LIM when you tow the airplane with an engine removed.
(3) Parking:
   (a) Make sure you do not have a fuel LIM when the airplane is parked with an engine removed.
(4) There are no restrictions to fuel lateral imbalance when both engines are installed. The fuel tanks can be filled in any order as stated in AMM 12-11-01/301. A full wing load imbalance is acceptable during ground maintenance when both engines are installed.

D. When thunderstorms or lightning are within a 10 mile (16 kilometer) radius of the immediate area, the defueling procedure should stop.

E. Strong wind conditions can cause a build-up of static electricity. Large charges of static electricity can develop on support equipment while parked as a result of the movement of dust particles and air currents during strong wind conditions. Strong wind conditions can also cause the unwanted movement of items or equipment which can hit the airplane or injure persons. Wind gusts can damage the airplane structure. Fueling procedures should stop if strong wind conditions are present.

BOEING PROPRIETARY - Copyright (C) - Unpublished Work - See title page for details.

F. The override pumps cannot be operated with less than 1000 pounds (453 kilograms) per AD 97-19-15. This restriction applies to airplanes that have one or more override pumps that have inlet diffusers attached by screws (P/N S343T002-5, -8, -12, -15). SB 28-52 and SB 28-62 replace these pumps with pumps that either have no diffusers or have a cast-in inlet diffuser. When all the pumps are replaced with new or modified pumps (P/N S343T002-23 or higher dash number) there is no minimum fuel restriction. Do not use JP4 or JET-B fuel after the new or modified override pump is installed.

TASK 28-26-00-652-040

2. Pressure Defueling

A. References

(1) AMM 06-44-00/201, Wings Access Doors and Panels
(2) AMM 12-11-03/301, Fuel Sump Draining
(3) AMM 20-41-00/201, Static Grounding
(4) AMM 24-22-00/201, Electrical Power Control
(5) AMM 27-81-00/201, Leading Edge Slat System

B. Access

(1) Location Zones

521 Leading Edge to Front Spar (Left)
532 Main Tank - Inboard of Rib No. 10 (Left)
632 Main Tank - Inboard of Rib No. 10 (Right)

(2) Access Panel

521QB Fueling Station Door (Left)

C. Procedure

S 912-041

WARNING: DO NOT OPERATE HF COMMUNICATIONS SYSTEM OR WEATHER RADAR DURING THE DEFUELING OPERATIONS. THE HF COMMUNICATION SYSTEM OR WEATHER RADAR COULD CAUSE AN EXPLOSION TO OCCUR.

CAUTION: DO NOT OPERATE THE HYDRAULIC SYSTEM IF THERE IS LESS THAN 4400 LBS (2200 KGS) OF FUEL IN EACH MAIN FUEL TANK. THE HYDRAULIC SYSTEM CAN BECOME TOO HOT IF THE HEAT EXCHANGER IS NOT IN FUEL.

(1) Make sure the airplane and the defueling truck are bonded and grounded (AMM 20-41-00/201).

S 862-042

(2) Supply electrical power (AMM 24-22-00/201).

S 862-043

(3) Make sure these circuit breakers on the main power distribution panel, P6, are closed:
(a) 6E7, DEFUELING VALVES

BOEING PROPRIETARY - Copyright (C) - Unpublished Work - See title page for details.

(b) 6G15, L AFT FUEL BOOST PUMP
(c) 6G18, R FWD FUEL BOOST PUMP
(d) 6G21, R AFT FUEL BOOST PUMP
(e) 6G24, L FWD FUEL BOOST PUMP

S 862-044
(4) Make sure these circuit breakers on the overhead circuit breaker panel, P11, are closed:
(a) 11C34, FUEL QTY 1
(b) 11M15, FUEL PUMPS L CTR
(c) 11M16, FUEL PUMPS R FWD L AFT
(d) 11M19, FUEL QTY 2
(e) 11M24, FUEL PUMPS R CTR
(f) 11M25, FUEL PUMPS L FWD R AFT

S 862-045
(5) Make sure this circuit breaker on the APU external power panel, P34, is closed:
(a) 34L4, DEFUELING VALVES

S 012-002
(6) Open the fueling station door, 521QB (AMM 06-44-00/201).

S 212-188
(7) Make sure the fueling panel light comes on (View A, Fig. 201).

NOTE: This shows there is 28v dc.

S 032-171
(8) Remove the fueling adapter cap if one is installed on the fueling adapter.

S 862-047
(9) Put cams of the fueling adapters to the DEFUEL position (View B, Fig. 201).

S 492-229

CAUTION: BEFORE DEFUEL OPERATIONS, MAKE SURE THE HOSE NOZZLE AND HOSE-END CONTROL VALVE (IF USED) ARE CONFIGURED PER THE SUPPLIER'S MAINTENANCE MANUAL. FAILURE TO DO SO COULD CAUSE DAMAGE TO THE AIRPLANE.

(10) Connect the fueling nozzles to one or two of the fueling adapters.

S 862-049
(11) Put the battery power switch on the fueling control panel to the BATT position (View C, Fig. 201).

BOEING PROPRIETARY - Copyright (C) - Unpublished Work - See title page for details.

S 862-050
(12) Push the TEST IND switch on the fueling control panel to do a test on the load select indicators.

S 212-006
(13) Make sure 88.8 shows on the top and bottom displays of the load select indicators.

S 862-051
(14) Push and release each defuel valve light.
(a) Make sure each defuel valve light comes on and then goes off.
(b) Put the LEFT MAIN DEFUEL VALVES switch on the fueling control panel to the OPEN position (View C, Fig. 201).
(c) Make sure the LEFT MAIN DEFUEL VALVES OPEN light comes on.
(d) Put the RIGHT MAIN DEFUEL VALVES switch on the fueling control panel to the OPEN position (View C, Fig. 201).
(e) Make sure the RIGHT MAIN DEFUEL VALVES OPEN light comes on.
(f) Push the CROSSFEED switch-light(s) on the P5 overhead panel to the ON position (Fig. 202).
1) Make sure the ON flowbar comes on.
(g) OVERRIDE PUMPS WITH A DIFFUSER INSTALLED (PN S343T002-5,-8,-12,-15);
Do these steps:
1) 767-200/300 AIRPLANES WITHOUT A CENTER TANK SCAVENGE SYSTEM;
Do these steps:

WARNING: DO NOT OPERATE THE TWO OVERRIDE (C) PUMPS AT THE SAME TIME IF THE FUEL QUANTITY IN THE AUXILIARY TANK IS BELOW 1000 POUNDS (453 KILOGRAMS). DRY FUEL PUMP OPERATION MAY CAUSE FUEL VAPORS IN THE TANK TO IGNITE DUE TO THE GENERATION OF SPARKS CAUSED BY METAL TO METAL CONTACT WITHIN THE FUEL PUMPS.

a) Make sure there is a minimum fuel quantity of 1000 pounds (453 kilograms) in the auxiliary tank if you operate the two override pumps at the same time.

WARNING: OPERATE ONLY ONE OF THE TWO OVERRIDE (C) PUMPS IF THE FUEL QUANTITY IN THE AUXILIARY TANK IS BETWEEN 1000 POUNDS (453 KILOGRAMS) AND 400 POUNDS (200 KILOGRAMS). DRY FUEL PUMP OPERATION MAY CAUSE FUEL VAPORS IN THE TANK TO IGNITE DUE TO THE GENERATION OF SPARKS CAUSED BY METAL TO METAL CONTACT WITHIN THE FUEL PUMPS.

b) Make sure there is a minimum fuel quantity of 400 pounds (200 kilograms) in the auxiliary tank if you operate one of the two override pumps.

BOEING PROPRIETARY - Copyright (C) - Unpublished Work - See title page for details.

c) If you operate one of the two override pumps between 1000 pounds (453 kilograms) and 400 pounds (200 kilograms), make sure the pitch attitude of the airplane is between -1 and +2 degrees (AMM 28-44-00/201).

d) Record the pitch attitude of the airplane before you operate one of the two override pumps with less than 1000 pounds (453 kilograms).

e) Turn the override pump switch to the off position if the low PRESS lights comes on before the auxiliary tank quantity is at 400 pounds (200 kilograms).

2) 767-200/300 AIRPLANES WITH A CENTER TANK SCAVENGE SYSTEM AND 767-200ER/300ER AIRPLANES;
Do these steps:

WARNING: DO NOT OPERATE THE LEFT OR RIGHT OVERRIDE (C) PUMP IF THE FUEL QUANTITY IN THE AUXILIARY TANK IS BELOW 1000 POUNDS (453 KILOGRAMS). DRY FUEL PUMP OPERATION MAY CAUSE FUEL VAPORS IN THE TANK TO IGNITE DUE TO THE GENERATION OF SPARKS CAUSED BY METAL TO METAL CONTACT WITHIN THE FUEL PUMPS.

a) Make sure there is a minimum fuel quantity of 1000 pounds (453 kilograms) in the auxiliary tank.

WARNING: DO NOT OPERATE A FUEL PUMP IF THE LOW PRESSURE LIGHT COMES ON AND STAYS ON. FUEL VAPORS IN THE TANK MAY IGNITE AND CAUSE A FIRE OR EXPLOSION.

(h) To operate any of the fuel pumps, you must be in the flight compartment to continuously monitor the fuel quantity and the low pressure indication in the fuel tank.

1) Immediately set the applicable fuel pump switch to the off position if the low PRESS light comes on and stays on.

NOTE: When defueling or transferring fuel with minimum backpressure to the pumps, it is possible for the low pressure light(s) to come on. In this case, monitor tank quantity and set the pump switch to OFF if tank quantity is not changing.

BOEING PROPRIETARY - Copyright (C) - Unpublished Work - See title page for details.

(i) Push the applicable fuel boost pump or fuel override pump switch-light (for the tank(s) that you want to defuel) on the P5 overhead panel to the ON position (Fig. 202).

NOTE: This starts the defueling operation.

(j) Make sure the ON flowbar comes on.

S 972-066
(15) Monitor the quantity of fuel in the fuel tanks on the load select indicators of the fueling control panel (View C, Fig. 201).

S 862-067
(16) Put the applicable fuel boost pump, or override pump switch-light to the off position when the necessary quantity of fuel is defueled (Fig. 202).

NOTE: You can stop the defuel operation when it is necessary, if you put the LEFT and RIGHT MAIN DEFUEL VALVES switches to the CLOSE position (View C, Fig. 201).

S 652-068
(17) If the fuel tank must be fully defueled, drain the remaining fuel through the sump drain valve (AMM 12-11-03/301).

S 862-069
(18) Put all the DEFUEL VALVES switches to the CLOSE position (View C, Fig. 201).

S 862-242
(19) Push the FUEL CROSSFEED switch-light(s) on the P5 overhead panel to the off position (Fig. 202).

S 092-009
(20) Disconnect the fueling nozzles from the fueling adapters (View A, Fig. 201).

BOEING PROPRIETARY - Copyright (C) - Unpublished Work - See title page for details.

S 862-010

(21) Put the cams of the fueling adapters to the FUEL position (View B, Fig. 201).

S 432-172

CAUTION: MAKE SURE YOU REPLACE THE FUELING ADAPTER CAP. DAMAGE TO THE SLAT CONTROL MECHANISM CAN OCCUR.

(22) Install the fueling adapter cap if you removed it to get access to the fueling adapter.

S 092-011

(23) Disconnect the cables that you used to bond the airplane to the fuel source.

S 862-012

(24) If the battery power switch is in the BATT position, put the battery power switch to the NORMAL position (View C, Fig. 201).

S 412-070

(25) Close the fueling station door, 521QB (AMM 06-44-00/201).

S 862-071

(26) Remove electrical power if it is not necessary (AMM 24-22-00/201).

TASK 28-26-00-652-072

3. Suction Defueling

A. General

(1) You cannot suction defuel the auxiliary fuel tank.

B. References

(1) AMM 06-44-00/201, Wings Access Doors and Panels

(2) AMM 12-11-03/301, Fuel Sump Draining

BOEING PROPRIETARY - Copyright (C) - Unpublished Work - See title page for details.

(3) AMM 20-41-00/201, Static Grounding
(4) AMM 24-22-00/201, Electrical Power Control
(5) AMM 27-81-00/201, Leading Edge Slat System

C. Access
(1) Location Zones
521 Leading Edge to Front Spar (Left)
532 Main Tank - Inboard of Rib No. 10 (Left)
632 Main Tank - Inboard of Rib No. 10 (Right)

(2) Access Panel
521QB Fueling Station Door (Left)

D. Procedure

S 912-142

WARNING: DO NOT OPERATE HF COMMUNICATIONS SYSTEM OR WEATHER RADAR DURING THE DEFUELING OPERATIONS. THE HF COMMUNICATION SYSTEM OR WEATHER RADAR COULD CAUSE AN EXPLOSION TO OCCUR.

CAUTION: DO NOT OPERATE THE HYDRAULIC SYSTEM IF THERE IS LESS THAN 4400 LBS (2200 KGS) OF FUEL IN EACH MAIN FUEL TANK. THE HYDRAULIC SYSTEM CAN BECOME TOO HOT IF THE HEAT EXCHANGER IS NOT IN FUEL.

(1) Make sure the airplane and defueling truck are bonded and grounded (AMM 20-41-00/201).

S 862-073
(2) Supply electrical power (AMM 24-22-00/201).

S 862-074
(3) Make sure this circuit breaker on the main power distribution panel, P6, is closed:
(a) 6E7, DEFUEL VALVES

BOEING PROPRIETARY - Copyright (C) - Unpublished Work - See title page for details.

S 862-075

(4) Make sure this circuit breaker on the APU external power panel, P34, is closed:
(a) 34L4, DEFUELING VALVES

S 862-076

(5) Make sure these circuit breakers on the overhead circuit breaker panel, P11, are closed:
(a) 11C34, FUEL QTY 1
(b) 11M19, FUEL QTY 2

S 012-144

(6) Open the fueling station door, 521QB (AMM 06-44-00/201).

S 212-190

(7) Make sure the fueling panel light comes on (View A, Fig. 201).

NOTE: This shows there is 28v dc.

S 492-077

(8) Connect the grounding cable at the fueling station.

NOTE: The grounding cable is not necessary if there is electrical continuity between the fueling nozzle and the receptacle.

S 862-078

(9) Put the cams of the fueling adapters to the DEFUEL position (View B, Fig. 201).

S 492-230

CAUTION: BEFORE DEFUEL OPERATIONS, MAKE SURE THE HOSE NOZZLE AND HOSE-END CONTROL VALVE (IF USED) ARE CONFIGURED PER THE SUPPLIER'S MAINTENANCE MANUAL. FAILURE TO DO SO COULD CAUSE DAMAGE TO THE AIRPLANE.

(10) Connect the fueling nozzles to one or two of the fueling adapters.

BOEING PROPRIETARY - Copyright (C) - Unpublished Work - See title page for details.

S 862-080
(11) Put the battery power switch on the fueling control panel to the BATT position (View C, Fig. 201).

S 862-081
(12) Push the TEST IND switch on the fueling control panel to do a test on the load select indicators.

S 212-007
(13) Make sure 88.8 shows on the top and bottom displays of the load select indicators.

S 862-082
(14) Push and release each defuel valve light.
(a) Make sure each defuel valve light comes on and then goes off.

S 862-086
(15) Put the left main fuel tank in the configuration that follows for suction defueling:
(a) Put the LEFT MAIN DEFUEL VALVES switch on the fueling control panel, P28, to the OPEN position (View C, Fig. 201).
(b) Make sure the LEFT MAIN DEFUEL VALVES OPEN light comes on.

S 862-087
(16) Put the right main fuel tank in the configuration that follows for suction defueling:
(a) Put the RIGHT MAIN DEFUEL VALVES switch on the fueling control panel, P28, to the OPEN position (View C, Fig. 201).
(b) Make sure the RIGHT MAIN DEFUEL VALVES OPEN light comes on.

S 652-088
(17) Start the defueling truck.

NOTE: This starts the suction defueling operation.

BOEING PROPRIETARY - Copyright (C) - Unpublished Work - See title page for details.

S 972-089
(18) Monitor the quantity of fuel in the fuel tanks on the load select indicators of the fueling control panel, P28.

S 862-092
(19) Put the applicable DEFUEL VALVES switch on the fueling control panel to the CLOSED position when the necessary quantity of fuel is defueled.

S 652-093
(20) Stop the defueling truck.

S 652-094
(21) If the fuel tank must be fully defueled, drain the remaining fuel through the sump drain valve (AMM 12-11-03/301).

S 862-095
(22) Put all the DEFUEL VALVES switches to the CLOSE position.

S 092-014
(23) Disconnect the fueling nozzles from the fueling adapters (View A, Fig. 201).

S 862-013
(24) Put the cams of the fueling adapters to the FUEL position (View B, Fig. 201).

S 092-015
(25) Disconnect the cables that you used to bond the airplane to the fuel source.

S 862-016
(26) If the battery power switch is in the BAT position, put the battery power switch to the NORMAL position (View C, Fig. 201).

BOEING PROPRIETARY - Copyright (C) - Unpublished Work - See title page for details.

S 412-097
(27) Close the fueling station door, 521QB (AMM 06-44-00/201).

S 862-096
(28) Remove the electrical power if it is not necessary (AMM 24-22-00/201).

TASK 28-26-00-652-098

4. Tank to Tank Transfer (Fig. 201)

A. References
(1) AMM 06-44-00/201, Wings Access Doors and Panels
(2) AMM 12-11-03/301, Fuel Sump Draining
(3) AMM 20-41-00/201, Static Grounding
(4) AMM 24-22-00/201, Electrical Power Control
(5) AMM 27-81-00/201, Leading Edge Slat System

B. Access
(1) Location Zones
521 Leading Edge to Front Spar (Left)
532 Main Tank - Inboard of Rib No. 10 (Left)
632 Main Tank - Inboard of Rib No. 10 (Right)

(2) Access Panel
521QB Fueling Station Door (Left)

C. Procedure

S 912-099

WARNING: DO NOT OPERATE THE HF COMMUNICATIONS SYSTEM OR WEATHER RADAR DURING THE DEFUELING OPERATIONS. THE HF COMMUNICATIONS SYSTEM OR WEATHER RADAR COULD CAUSE AN EXPLOSION.

CAUTION: DO NOT OPERATE THE HYDRAULIC SYSTEM IF THERE IS LESS THAN 4400 LBS (2200 KGS) OF FUEL IN EITHER MAIN FUEL TANK. THE HYDRAULIC SYSTEM CAN BECOME HOT IF THE HEAT EXCHANGER IS NOT IN FUEL.

(1) Make sure the airplane is grounded (AMM 20-41-00/201).

BOEING PROPRIETARY - Copyright (C) - Unpublished Work - See title page for details.

S 862-100
(2) Supply electrical power (AMM 24-22-00/201).

S 862-101
(3) Make sure these circuit breakers on the main power distribution panel, P6, are closed:
(a) 6E5, FUELING CONTROL
(b) 6E6, FUELING VALVES
(c) 6E7, DEFUEL VALVES
(d) 6F15, L FUEL OVRD PUMP
(e) 6F21, R FUEL OVRD PUMP
(f) 6G15, L AFT FUEL BOOST PUMP
(g) 6G18, R FWD FUEL BOOST PUMP
(h) 6G21, R AFT FUEL BOOST PUMP
(i) 6G24, L FWD FUEL BOOST PUMP

S 862-102
(4) Make sure these circuit breakers on the overhead circuit breaker panel, P11, are closed:
(a) 11C34, FUEL QTY 1
(b) 11M15, FUEL PUMPS L CTR
(c) 11M16, FUEL PUMPS R FWD L AFT
(d) 11M19, FUEL QTY 2
(e) 11M24, FUEL PUMPS R CTR
(f) 11M25, FUEL PUMPS L FWD R AFT

S 862-103
(5) Make sure these circuit breakers on the APU external power panel, P34, are closed:
(a) 34L3, FUELING CONTROL
(b) 34L4, DEFUEL VALVES
(c) 34L5, FUELING VALVES

S 012-147
(6) Open the fueling station door, 521QB (AMM 06-44-00/201).

BOEING PROPRIETARY - Copyright (C) - Unpublished Work - See title page for details.

S 212-150
(7) Make sure the fueling panel light comes on (View A, Fig. 201).

NOTE: This shows there is 28v dc.

S 862-104
(8) Put the battery power switch on the fueling control panel, P28, to the BATT position (View C, Fig. 201).

S 862-107
(9) Push the TEST IND switch on the fueling control panel to do a test on the load select indicators.

S 212-008
(10) Make sure 88.8 shows on the top and bottom displays of the load select indicators.

S 862-108
(11) Push and release each fueling valve light.
(a) Make sure each fueling valve light comes on and then goes off.

S 862-109
(12) Push and release each defuel valve light.
(a) Make sure each defuel valve light comes on and then goes off.

S 862-035
(13) For the fuel tank that gets the fuel, put the FUELING VALVE to the OPEN position.

S 212-110
(14) Make sure the applicable FUELING VALVE lights come on.

S 862-111
(15) For the fuel tank that supplies the fuel, put the DEFUEL VALVES switch to the OPEN position.

BOEING PROPRIETARY - Copyright (C) - Unpublished Work - See title page for details.

S 212-036
(16) Make sure the applicable DEFUEL VALVES OPEN light comes on.

S 862-112
(17) Push the FUEL CROSSFEED switch-light on the overhead panel, P5, when you move the fuel to the fuel tank on the opposite side of the airplane (Fig. 202).

S 212-037
(18) Make sure the flowbar comes on.

S 782-228
(19) OVERRIDE PUMPS WITH A DIFFUSER INSTALLED (PN S343T002-5,-8,-12,-15); Do these steps:

WARNING: DO NOT OPERATE THE LEFT OR RIGHT OVERRIDE (C) PUMPS IF THE FUEL QUANTITY IN THE AUXILIARY TANK IS BELOW 1000 POUNDS (453 KILOGRAMS). DRY FUEL PUMP OPERATION MAY CAUSE FUEL VAPORS IN THE TANK TO IGNITE DUE TO THE GENERATION OF SPARKS CAUSED BY METAL TO METAL CONTACT WITHIN THE FUEL PUMPS.

(a) Make sure there is a minimum fuel quantity of 1000 pounds (453 kilograms) in the auxiliary tank.

S 862-231

WARNING: DO NOT OPERATE A FUEL PUMP IF THE LOW PRESSURE LIGHT COMES ON AND STAYS ON. FUEL VAPORS IN THE TANK MAY IGNITE AND CAUSE A FIRE OR EXPLOSION.

(20) To operate any of the fuel pumps, you must be in the flight compartment to continuously monitor the fuel quantity and the low pressure indication in the fuel tank.
(a) Immediately set the applicable fuel pump switch to OFF if the LOW PRESSURE light comes on and stays on.

NOTE: When defueling or transferring fuel with minimum backpressure to the pumps, it is possible for the low pressure light(s) to come on. In this case, monitor tank quantity and set the pump switch to OFF if tank quantity is not changing.

1) If the remaining fuel pump's LOW PRESSURE light comes on and stays on, monitor the tank quantity. If the tank quantity is not changing, set the pump switch to OFF.

BOEING PROPRIETARY - Copyright (C) - Unpublished Work - See title page for details.

S 862-038
(21) For the fuel tank that supplies the fuel, push the applicable fuel boost pump or override pump switch-lights to the ON position.

NOTE: This starts the tank to tank transfer of fuel.

S 212-039
(22) Make sure the ON flowbar comes on.

S 972-114
(23) Monitor the quantity of fuel in the fuel tanks on the load select indicators (View C, Fig. 201).

S 862-115
(24) Push the applicable fuel boost pump or override pump switch-light to the off position when the necessary quantity of fuel is moved (Fig. 202).

S 862-116
(25) Put the applicable DEFUEL VALVES switch on the fueling control panel, P28, to the CLOSE position (View C, Fig. 201).

S 862-119
(26) Put the applicable FUELING VALVE switch on the fueling control panel, P28, to the OFF position.

S 652-122
(27) If the fuel tank must be fully defueled, drain the remaining fuel through the sump drain valve (AMM 12-11-03/301).

S 412-123
(28) Close the fueling station door, 521QB (AMM 06-44-00/201).

S 862-124
(29) Remove electrical power if it is not necessary (AMM 24-22-00/201).

BOEING PROPRIETARY - Copyright (C) - Unpublished Work - See title page for details.

TASK 28-26-00-652-125

5. Defueling Without Electrical Power (Fig. 203)
   A. Equipment
      (1) Hose Set - Defueling Main and Override Pump - A28001-1
      (2) Receptacle - for use with jet fuel, large enough to hold all the fuel you want to defuel, commercially available
   B. Consumable Materials
      (1) G02353 Lubricant-Petrolatum, VV-P-236
   C. References
      (1) AMM 28-22-03/401, Main Tank Fuel Boost Pump
      (2) AMM 28-22-05/401, Center Auxiliary Tank Override Pump
   D. Access
      (1) Location Zones
          531 Center Auxiliary Tank (Left)
          532 Main Tank - Inboard of Rib No. 10 (Left)
          631 Center Auxiliary Tank (Right)
          632 Main Tank - Inboard of Rib No. 10 (Right)

   E. Procedure

      S 032-126
      (1) To defuel the main fuel tank, remove a fuel boost pump (AMM 28-22-03/401).

      S 032-127
      (2) To defuel the auxiliary fuel tank, remove an override pump (AMM 28-22-05/401).

      S 492-128
      (3) To install the hose set to the applicable housing, do the steps that follow:
          (a) Make sure the valve on the hose set is closed.

BOEING PROPRIETARY - Copyright (C) - Unpublished Work - See title page for details.

(b) Lubricate the adapter on the hose set with petrolatum lubricant, VV-P-236.
(c) Align the keyhole on the adapter of the hose set with the allen-head screws.
(d) Push the adapter up until the adapter touches the shutoff sleeve.

NOTE: Do not turn the adapter as you push it up.

(e) Make sure the allen-head screws go through the keyholes.
(f) Turn the adapter on the hose set approximately 12 degrees in the clockwise direction.
(g) Push the adapter and the shutoff sleeve up until the shutoff sleeve touches the housing.
(h) Install the phillips-head screw.

NOTE: The phillips-head screw attaches to the adapter.

(i) Tighten the phillips-head screw to 48-53 pound-inches.

S 862-129
(4) Put the valve end of the hose set hose in the fuel receptacle.

S 862-168
(5) Open the valve on the hose set to start the defueling.

S 862-130
(6) When the necessary quantity of fuel is defueled, close the valve on the hose set.

S 032-131
(7) Remove the phillips-head screw from the adapter.

NOTE: The phillips-head screw stays attached to the adapter.

BOEING PROPRIETARY - Copyright (C) - Unpublished Work - See title page for details.

S 862-132

WARNING: DO NOT TURN THE ADAPTER. MAKE SURE YOU PULL THE ADAPTER DOWN FULLY. FUEL LEAKAGE COULD OCCUR IF YOU TURN ADAPTER AND THE SHUTOFF SLEEVE IS NOT LATCHED.

(8) Pull the adapter and shutoff sleeve down until the valve stop stops the movement (approximately 1.5 inches).

NOTE: Increased force is necessary during the last 1/4 inch of movement.

S 862-232

WARNING: MAKE SURE THE DOG LATCH ON THE HOUSING ALIGNS WITH THE LOCKING SLOT ON THE SHUTOFF SLEEVE. FUEL LEAKAGE COULD OCCUR IF YOU TURN THE ADAPTER WITHOUT THE SHUTOFF SLEEVE LATCHED.

(9) Make sure the locking slot and the dog latch align.

S 862-234

(10) Turn the adapter approximately 12 degrees in the counterclockwise direction until it stops.

NOTE: This releases the adapter from the shutoff sleeve.

S 212-135

(11) Make sure the dog latch on the housing engages with the locking slot on the shutoff sleeve.
(a) If the dog latch does not engage with the locking slot, do the steps that follow:
1) Make sure the adapter and the shutoff sleeve touch.

BOEING PROPRIETARY - Copyright (C) - Unpublished Work - See title page for details.

2) Turn the adapter in the clockwise direction.
3) Pull the adapter down until the dog latch and locking slot align.
4) Turn the adapter approximately 12 degrees in the counterclockwise direction until it stops.

NOTE: This releases the adapter from the shutoff sleeve.

5) Make sure the dog latch engages with the locking slot.

S 092-136
(12) Pull down to remove the adapter of the hose set from the shutoff sleeve.

S 432-137
(13) For the main fuel tank install the fuel boost pump (AMM 28-22-03/401).

S 432-138
(14) For the auxiliary fuel tank, install the override pump (AMM 28-22-05/401).

BOEING PROPRIETARY - Copyright (C) - Unpublished Work - See title page for details.

DEFUELING VALVE - REMOVAL/INSTALLATION

1. General
   A. The defueling valves are installed on the rear spar of the wing. Each defueling valve contains three parts: the actuator, the adapter shaft and the valve body. The actuator is installed on the aft face of the rear spar, out of the fuel tank. The adapter shaft and valve body are installed on the front face of the rear spar, in the fuel tank.
   B. This procedure contains five tasks. The first task removes the valve body of the defueling valve. The second task installs the valve body of the defueling valve. The third task removes the adapter shaft of the defueling valve. The fourth task installs the adapter shaft of the defueling valve. The fifth task aligns the adapter shaft of the defueling valve.
   C. The removal and installation procedure for the actuator is in AMM 28-26-11/401.

TASK 28-26-01-004-001

2. Remove the Valve Body of the Defueling Valve
   A. References
      (1) AMM 06-44-00/201, Wing Access Doors and Panels
      (2) AMM 28-11-00/201, Fuel Tanks (Purging and Entry)
      (3) AMM 28-11-01/401, Main Tank Access Door
      (4) AMM 28-22-07/401, Fuel Line and Fittings
      (5) AMM 28-26-00/201, Defueling
   B. Access
      (1) Location Zones
          532 Main Tank - Inboard of Rib No. 10 (Left)
          551 Rear Spar to MLG Support Beam (Left)
          632 Main Tank - Inboard of Rib No. 10 (Right)
          651 Rear Spar to MLG Support Beam (Right)

      (2) Access Panels
          532BB Main Tank Access Door (Left)
          551TB Trailing Edge Skin Panel (Left)
          632BB Main Tank Access Door (Right)
          651TB Trailing Edge Skin Panel (Right)

   C. Procedure

      S 654-002
      (1) Defuel the applicable fuel tanks (AMM 28-26-00/201).

      S 654-003
      (2) Drain and purge the applicable fuel tanks (AMM 28-11-00/201).

      S 014-004
      (3) For the defueling valve in the left main fuel tank, remove the left trailing edge skin panel, 551TB (AMM 06-44-00/201).

BOEING PROPRIETARY - Copyright (C) - Unpublished Work - See title page for details.

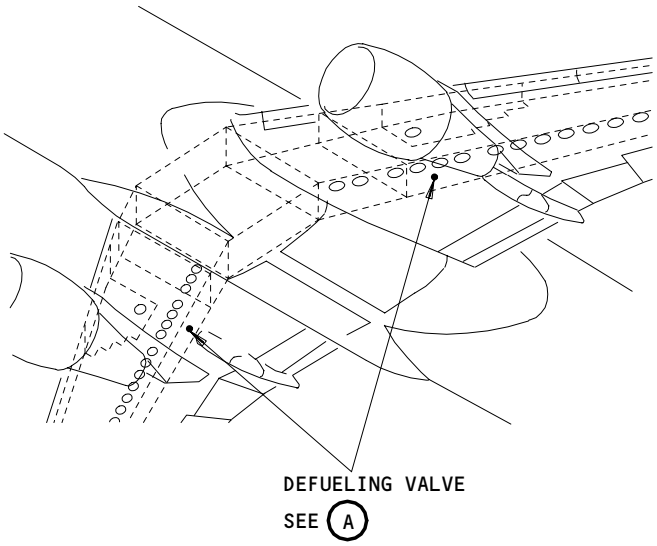

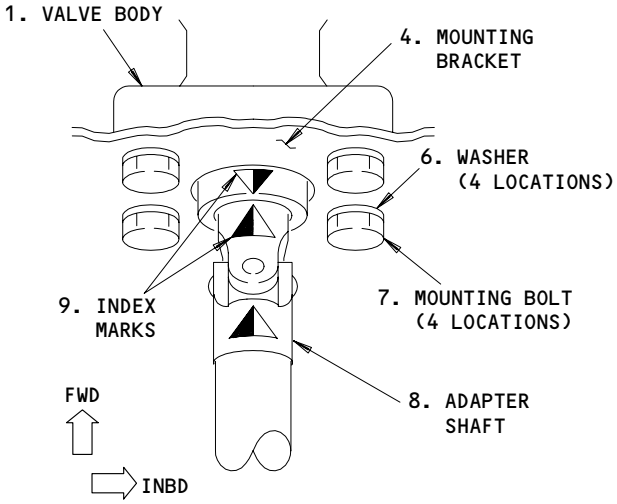

INTERFACE OF THE ADAPTER SHAFT AND VALVE BODY

B

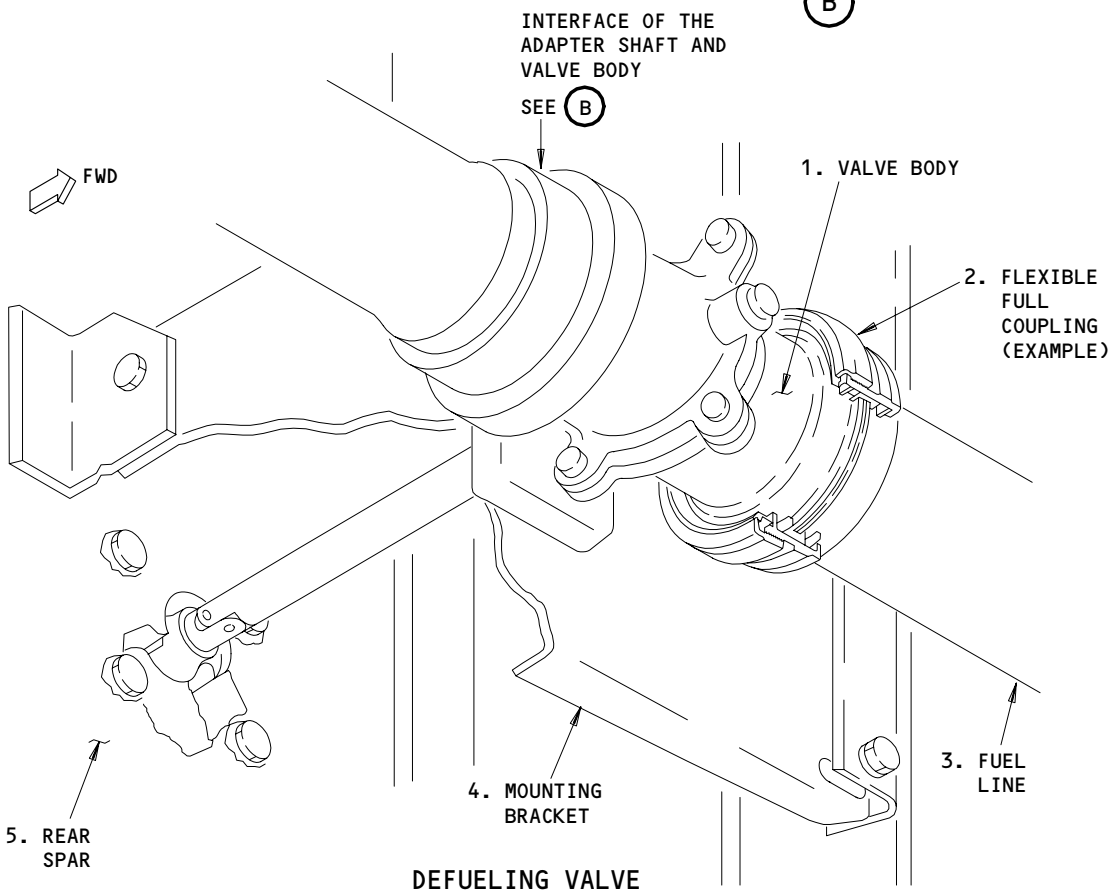

DEFUELING VALVE

A

Defueling Valve Installation
Figure 401

BOEING PROPRIETARY - Copyright (C) - Unpublished Work - See title page for details.

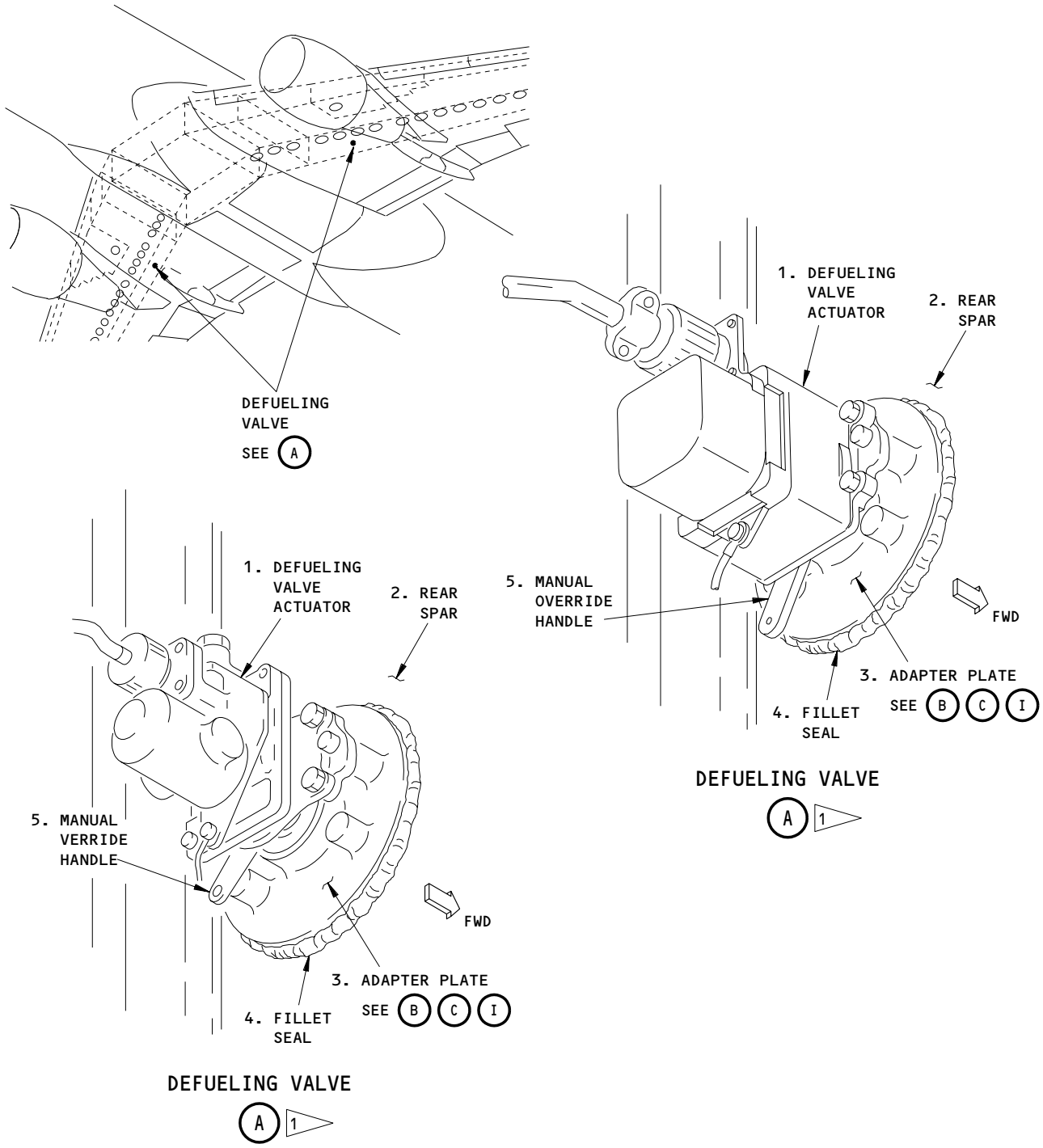

Defueling Valve Adapter Shaft Installation
Figure 402 (Sheet 1)

BOEING PROPRIETARY - Copyright (C) - Unpublished Work - See title page for details.

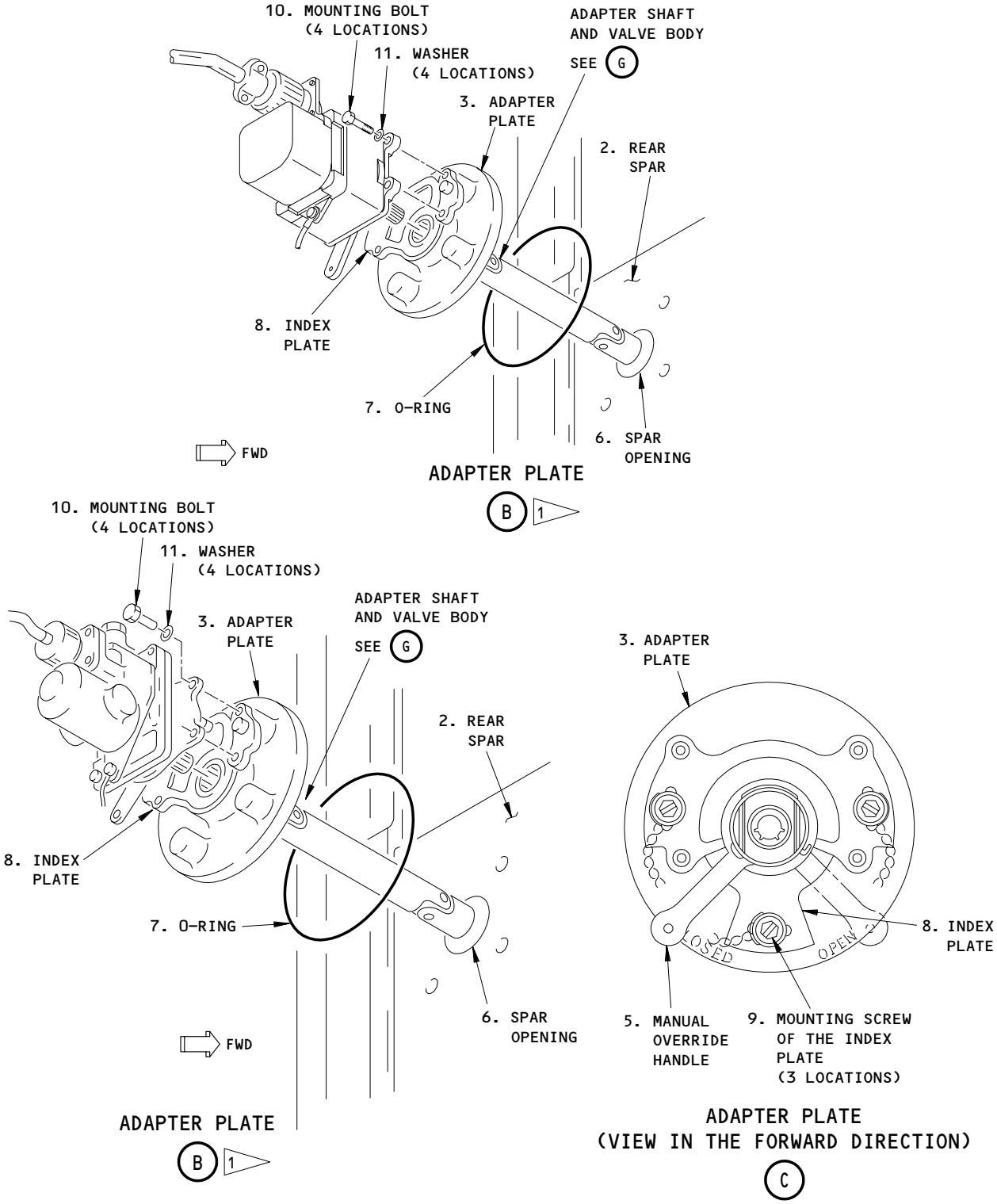

Defueling Valve Adapter Shaft Installation
Figure 402 (Sheet 2)

BOEING PROPRIETARY - Copyright (C) - Unpublished Work - See title page for details.

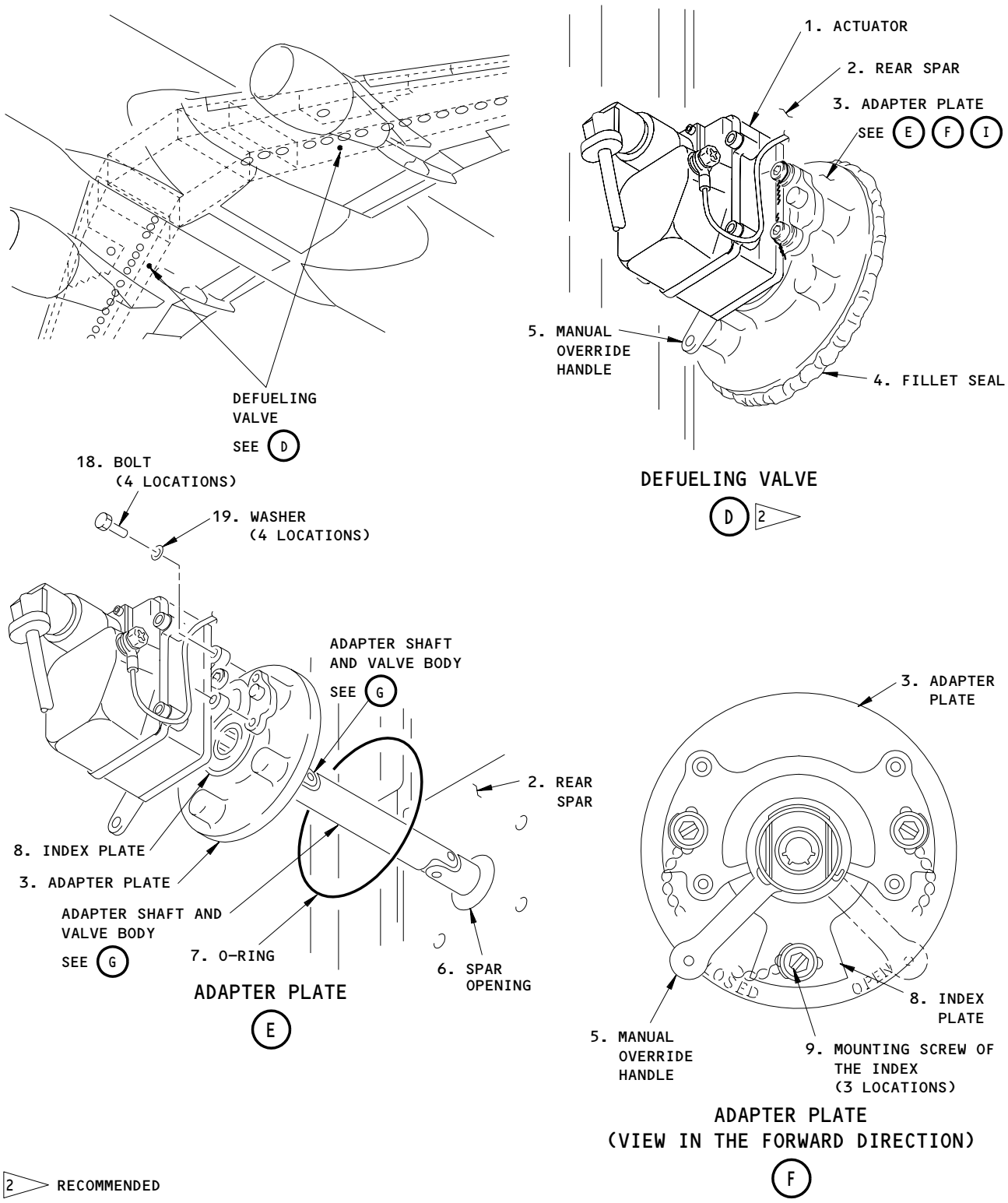

Defueling Valve Adapter Shaft Installation
Figure 402 (Sheet 3)

BOEING PROPRIETARY - Copyright (C) - Unpublished Work - See title page for details.

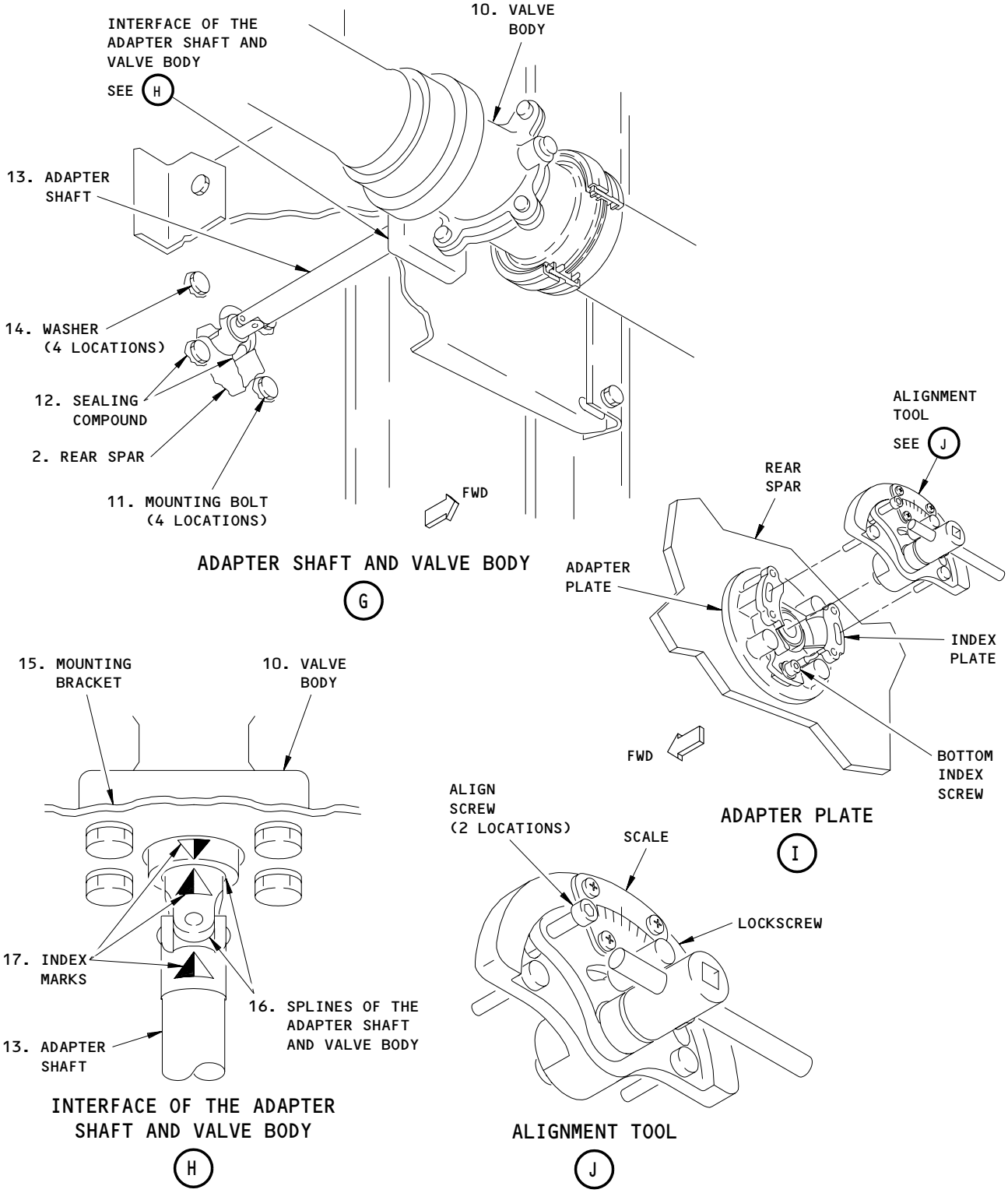

Defueling Valve Adapter Shaft Installation
Figure 402 (Sheet 4)

BOEING PROPRIETARY - Copyright (C) - Unpublished Work - See title page for details.

S 014-005
(4) For the defueling valve in the right main fuel tank, remove the right trailing edge skin panel, 651TB (AMM 06-44-00/201).

S 014-006
(5) For the defueling valves in the main fuel tanks, remove the applicable main tank access door, 532BB or 632BB (AMM 28-11-01/401).

S 864-025
(6) Put the manual override handle (5) of the defueling valve actuator (1) to the CLOSED position (View C, Fig. 402).

S 944-080

WARNING: OBEY THE FUEL TANK ENTRY PRECAUTIONS (AMM 28-11-00/201). FAILURE TO OBEY THE FUEL TANK ENTRY PRECAUTIONS COULD CAUSE INJURY TO PERSONS OR DAMAGE TO EQUIPMENT.

(7) Obey the fuel tank entry precautions (AMM 28-11-00/201).

S 034-026
(8) Disconnect the flexible full couplings (2) between the valve body (1) and fuel line (3) (View A, Fig. 401) (AMM 28-22-07/401).

S 034-027
(9) Remove the mounting bolts (7) that attach the valve body (1) to the mounting bracket (4) (View B, Fig. 401).

S 024-028
(10) Disengage the valve body (1) from the adapter shaft (8).

S 024-029
(11) Remove the valve body (1).

TASK 28-26-01-404-030
3. Install the Valve Body of the Defueling Valve
A. Parts

AMM			AIPC		
FIG	ITEM	NOMENCLATURE	SUBJECT	FIG	ITEM
401	1	Defueling Valve Body	28-26-01	01	30, 520

B. References
(1) AMM 06-44-00/201, Wing Access Doors and Panels
(2) AMM 12-11-01/301, Fuel Tank Pressure Fueling
(3) AMM 20-10-21/601, Electrical Bonding

BOEING PROPRIETARY - Copyright (C) - Unpublished Work - See title page for details.

(4) AMM 24-22-00/201, Electrical Power Control
(5) AMM 28-11-00/201, Fuel Tanks
(6) AMM 28-11-01/401, Main Tank Access Door
(7) AMM 28-22-07/401, Fuel Line and Fittings

C. Access

(1) Location Zones

521	Leading Edge to Front Spar (Left)
532	Main Tank - Inboard of Rib No. 10 (Left)
551	Rear Spar to MLG Support Beam (Left)
632	Main Tank - Inboard of Rib No. 10 (Right)
651	Rear Spar to MLG Support Beam (Right)

(2) Access Panels

521QB	Fueling Station Door (Left)
532BB	Main Tank Access Door (Left)
551TB	Trailing Edge Skin Panel (Left)
632BB	Main Tank Access Door (Right)
651TB	Trailing Edge Skin Panel (Right)

D. Procedure

S 214-031
(1) Make sure the manual override handle (5) of the defueling valve actuator (1) is in the CLOSED position (View A, Fig. 402).

S 944-131

WARNING: OBEY THE FUEL TANK ENTRY PRECAUTIONS (AMM 28-11-00/201). FAILURE TO OBEY THE FUEL TANK ENTRY PRECAUTIONS COULD CAUSE INJURY TO PERSONS OR DAMAGE TO EQUIPMENT.

(2) Obey the fuel tank entry precautions (AMM 28-11-00/201).

S 014-032
(3) Go into the fuel tank.

S 424-033
(4) Engage the valve body (1) on the adapter shaft (8) (View B, Fig. 401).

S 824-034
(5) Make sure the mark on the adapter shaft (8) and the index marks (9) align.

S 434-035
(6) Install the mounting bolts (7) that connect the valve body (1) to the mounting bracket (4).

S 824-036
(7) Align the fuel line (3) and the valve body (1) (View A, Fig. 401).

BOEING PROPRIETARY - Copyright (C) - Unpublished Work - See title page for details.

S 434-037
(8) Install the flexible full couplings (2) on the valve body (1) (AMM 28-22-07/401).

S 224-038
(9) Make sure the bonding resistance between the defueling valve and the airplane structure is not more than 0.020 ohms (AMM 20-10-21/601).

S 414-081

CAUTION: MAKE SURE YOU REMOVE ALL UNWANTED PARTICLES FROM THE FUEL TANK. UNWANTED PARTICLES CAN CAUSE A BLOCKAGE OF THE PUMPS AND PREVENT THE SCAVENGE OF FUEL AND WATER.

(10) Remove all unwanted materials from the fuel tank.

S 414-206
(11) For the defueling valves in the main fuel tanks, install the applicable main tank access door, 532BB or 632BB (AMM 28-11-01/401).

S 714-040
(12) Do a test of the defueling valve.
- (a) Make sure the manual override handle on the defueling valve actuator is in the CLOSED position.
- (b) Supply electrical power (AMM 24-22-00/201).
- (c) Open the fueling station door, 521QB (AMM 06-44-00/201).
- (d) At the fueling control panel, P28, put the applicable DEFUEL VALVES switch to the OPEN position.
- (e) Make sure the applicable DEFUEL VALVES OPEN light on the fueling control panel comes on when the defueling valve opens.
- (f) Make sure the manual override handle on the defueling valve actuator moves to the OPEN position.
- (g) Put the applicable DEFUEL VALVES switch to the CLOSE position.
- (h) Make sure the applicable DEFUEL VALVES OPEN light goes off.
- (i) Make sure the manual override handle on the defueling valve moves to the CLOSED position.
- (j) Close the fueling station door, 521QB (AMM 06-44-00/201).

S 414-041
(13) For the defueling valves in the main fuel tank, install the applicable trailing edge skin panel, 551TB or 651TB (AMM 06-44-00/201).

S 654-042
(14) Refuel the fuel tank (AMM 12-11-01/301).

S 864-043
(15) Remove electrical power if it is not necessary (AMM 24-22-00/201).

BOEING PROPRIETARY - Copyright (C) - Unpublished Work - See title page for details.

TASK 28-26-01-004-044

4. Remove the Adapter Shaft of the Defueling Valve

A. General

(1) The adapter shaft of the defueling valve has an index plate (8) and an adapter shaft (13). The adapter shaft (13) has an adapter plate (3) and a shaft.

B. References

(1) AMM 06-44-00/201, Wing Access Doors and Panels
(2) AMM 28-11-00/201, Fuel Tanks (Purging and Entry)
(3) AMM 28-11-01/401, Main Tank Access Door
(4) AMM 28-26-00/201, Defueling
(5) AMM 28-26-11/401, Defueling Valve Actuator

C. Access

(1) Location Zones

532 Main Tank - Inboard of Rib No. 10 (Left)
551 Rear Spar to MLG Support Beam (Left)
632 Main Tank - Inboard of Rib No. 10 (Right)
651 Rear Spar to MLG Support Beam (Right)

(2) Access Panels

532BB Main Tank Access Door (Left)
551TB Trailing Edge Skin Panel (Left)
632BB Main Tank Access Door (Right)
651TB Trailing Edge Skin Panel (Right)

D. Procedure

S 654-023
(1) Defuel the applicable fuel tanks (AMM 28-26-00/201).

S 654-024
(2) Drain and purge the applicable fuel tanks (AMM 28-11-00/201).

S 014-045
(3) For the defueling valve in the left main fuel tank, remove the left trailing edge skin panel, 551TB (AMM 06-44-00/201).

S 014-046
(4) For the defueling valve in the right main fuel tank, remove the right trailing edge skin panel, 651TB (AMM 06-44-00/201).

S 014-099
(5) For the defueling valves in the main fuel tanks, remove the applicable main tank access door, 532BB or 632BB (AMM 28-11-01/401).

S 864-054
(6) Put the manual override handle (5) of the defueling valve actuator (1) in the CLOSED position (View C, Fig. 402).

BOEING PROPRIETARY - Copyright (C) - Unpublished Work - See title page for details.

S 034-055
(7) Remove the defueling valve actuator (1) (AMM 28-26-11/401).

S 944-132

WARNING: OBEY THE FUEL TANK ENTRY PRECAUTIONS (AMM 28-11-00/201). FAILURE TO OBEY THE FUEL TANK ENTRY PRECAUTIONS COULD CAUSE INJURY TO PERSONS OR DAMAGE TO EQUIPMENT.

(8) Obey the fuel tank entry precautions (AMM 28-11-00/201).

S 014-109
(9) Go into the fuel tank.

S 034-056
(10) Remove the mounting bolts (11) and washers (14) from the adapter plate (3) (View D, Fig. 402).

S 024-057
(11) Disengage the adapter shaft (13) from the valve body (10).

S 024-058
(12) Remove the adapter shaft (13) (with the index plate (8) attached) through the spar opening (6) (View B, Fig. 402).

TASK 28-26-01-404-059
5. Install the Adapter Shaft of the Defueling Valve (Fig. 402)
A. General
(1) The adapter shaft of the defueling valve has an index plate (8) and an adapter shaft (13). The adapter shaft (13) has an adapter plate (3) and a shaft.
B. Consumable Materials
(1) G00034 Cotton Wiper, Process Cleaning Absorbent Wiper (cheesecloth, gauze) BMS15-5
(2) G50021 Scotch-Brite 96W pad
(3) D00504 Petrolatum grease
(4) C00064 Coating - Chemical Conversion Coating for Aluminum or Aluminum Alloys, MIL-C-5541 (MIL-C-81706) - Alodine 600
(5) C00307 BMS 10-20, Type II Class A - Finish, Corrosion Resistant
(6) A00247 Chromate Type Sealant - BMS 5-95, Class B
(7) A00767 Sealant - Integral Fuel Tank BMS 5-45
(8) B01008 Solvent - Series 88
(9) B01012 Solvent - Series 92

C. References
(1) AMM 06-44-00/201, Wing Access Doors and Panels
(2) AMM 12-11-01/301, Fuel Tank Pressure Fueling
(3) AMM 20-30-88/201, Airplane Structure Cleaning Solvents (Series 88)
(4) AMM 20-30-92/201, Airplane Structure Cleaning Solvents (Series 92)

BOEING PROPRIETARY - Copyright (C) - Unpublished Work - See title page for details.

(5) AMM 24-22-00/201, Electrical Power Control
(6) AMM 28-11-00/201, Fuel Tanks
(7) AMM 28-11-01/401, Main Tank Access Door
(8) AMM 28-26-11/401, Defueling Valve Actuator
(9) AMM 51-31-01/201, Seals and Sealing
(10) SWPM 20-20-00, Electrical Bonding and Grounds

D. Equipment
(1) Brush - Soft Bristle
(2) BAC5000 - Sealant Removal Tool

E. Access
(1) Location Zones

521	Leading Edge to Front Spar (Left)
532	Main Tank - Inboard of Rib No. 10 (Left)
551	Rear Spar to MLG Support Beam (Left)
632	Main Tank - Inboard of Rib No. 10 (Right)
651	Rear Spar to MLG Support Beam (Right)

(2) Access Panels

521QB	Fueling Station Door (Left)
532BB	Main Tank Access Door (Left)
551TB	Trailing Edge Skin Panel (Left)
632BB	Main Tank Access Door (Right)
651TB	Trailing Edge Skin Panel (Right)

F. AIRPLANES WITHOUT ACTUATOR MA20A2027 OR MA30A1001;
Install the Adapter Shaft of the Defueling Valve

S 434-060
(1) Install a new O-ring (7) on the adapter plate (3) (View B, Fig. 402).

S 214-110
(2) Make sure the seal surface on the rear spar (2) is clean.

S 424-061
(3) Put the adapter shaft (13) through the spar opening (6).

S 944-111

WARNING: OBEY THE FUEL TANK ENTRY PRECAUTIONS (AMM 28-11-00/201). FAILURE TO OBEY THE FUEL TANK ENTRY PRECAUTIONS COULD CAUSE INJURY TO PERSONS OR DAMAGE TO EQUIPMENT.

(4) Obey the fuel tank entry precautions (AMM 28-11-00/201).

S 014-062
(5) Go into the fuel tank (AMM 28-11-00/201).

S 424-063
(6) Engage the adapter shaft (13) and the valve body (10) (View D, Fig. 402).

BOEING PROPRIETARY - Copyright (C) - Unpublished Work - See title page for details.

S 434-064
(7) Install the four mounting bolts (11) and the washers (14) to attach the adapter plate (3).

S 824-153
(8) Do this task: Adapter Shaft Alignment.

S 434-115
(9) Install the lockwire on the index plate mounting screws (9) (AMM 20-10-23/401).

S 394-069
(10) Apply the sealing compound (12) over the adapter plate mounting bolts (11) and in the spar opening (6) between the adapter shaft (13) and the rear spar (2) (View D, Fig. 402) (AMM 51-31-00/001, AMM 51-31-01/201).
(a) Make sure the sealing compound does not touch the defueling valve when it is in operation.

S 224-070
(11) Make sure the bonding resistance between adapter shaft (13) and airplane structure is 0.020 ohm or less (SWPM 20-20-00).

S 394-071
(12) Apply a fillet seal (4) between the adapter plate (3) and the rear spar (2) with the chromate type sealant (AMM 51-31-00/001, AMM 51-31-01/201).

S 434-072
(13) Install the defueling valve actuator (1) (AMM 28-26-11/401).

S 414-073
(14) For the defueling valves in the main fuel tanks, close the applicable main tank access door, 532BB or 632BB (AMM 28-11-01/401).

G. AIRPLANES WITH ACTUATOR MA20A2027 OR MA30A1001;
Install the Adapter Shaft of the Defueling Valve

S 124-229
(1) Remove the old sealant and clean the rear spar, adapter shaft (13), index plate (8), and fasteners (if reused).
(a) Use the sealant removal tool and sealant removal tool handle (or equivalent) to remove the old sealant from the rear spar (2).
(b) If new parts are to be installed, use an abrasive pad to remove the anodized finish from the faying surfaces on the adapter plate (3) of the of the adapter shaft (13) and index plate (8) (SWPM 20-20-00).

BOEING PROPRIETARY - Copyright (C) - Unpublished Work - See title page for details.

WARNING: DO NOT GET SOLVENTS IN YOUR MOUTH, YOUR EYES, OR ON YOUR SKIN. DO NOT BREATHE THE FUMES FROM SOLVENTS. SOLVENTS ARE DANGEROUS MATERIALS. SOLVENTS CAN BE FLAMMABLE. OBEY THE MATERIAL SAFETY DATA SHEETS (MSDS) FOR SOLVENTS. OBEY LOCAL REGULATIONS FOR THE CORRECT PROCEDURES TO USE OR DISCARD SOLVENTS. SOLVENTS CAN CAUSE INJURIES TO PERSONS AND DAMAGE TO EQUIPMENT.

(c) To remove the remaining sealant, grease, oil, dirt, and other contamination from the components, use one of these items soaked with Series 92 solvent (AMM 20-30-92/201).
1) soft bristle brush
2) cotton wiper
3) Scotch-Brite 96W pad

S 114-230

(2) Do these steps to prepare the adapter plate (3) of the adapter shaft (13) and the rear spar (2) for a fillet sealed electrical faying surface bond (SWPM 20-20-00):

WARNING: DO NOT GET SOLVENTS IN YOUR MOUTH, YOUR EYES, OR ON YOUR SKIN. DO NOT BREATHE THE FUMES FROM SOLVENTS. SOLVENTS ARE DANGEROUS MATERIALS. SOLVENTS CAN BE FLAMMABLE. OBEY THE MATERIAL SAFETY DATA SHEETS (MSDS) FOR SOLVENTS. OBEY LOCAL REGULATIONS FOR THE CORRECT PROCEDURES TO USE OR DISCARD SOLVENTS. SOLVENTS CAN CAUSE INJURIES TO PERSONNEL AND DAMAGE TO EQUIPMENT.

(a) Final clean the contact surfaces of the adapter plate (3) and the rear spar (2) with a cotton wiper soaked with Series 88 solvent (AMM 20-30-88/201).
(b) Rub dry with a clean, dry cotton wiper.
(c) Continue to clean and dry the surface until the dry cotton wiper stays clean.

S 434-231

(3) While outside of the airplane fuel tank, do these steps:
(a) Put a thin layer of petrolatum grease on the new o-ring (7).
(b) Put the o-ring (7) in the o-ring groove of the adapter plate (3).
(c) Put the shaft of the adapter shaft (13) through the spar opening (6) in the rear spar (2).
(d) Make sure the shoulder of the adapter shaft (13) does not bind in the spar opening (6) of the rear spar (2).

BOEING PROPRIETARY - Copyright (C) - Unpublished Work - See title page for details.

S 864-232

WARNING: OBEY THE FUEL TANK ENTRY PRECAUTIONS. FAILURE TO OBEY THE FUEL TANK ENTRY PRECAUTIONS COULD CAUSE INJURY TO PERSONS OR DAMAGE TO EQUIPMENT.

(4) Obey the fuel tank entry precautions (AMM 28-11-00/201).

S 014-236

WARNING: DO THE PURGING AND FUEL TANK ENTRY PROCEDURE. FAILURE TO FOLLOW THE PURGING AND FUEL TANK ENTRY PROCEDURE COULD CAUSE INJURIES TO PERSONS OR DAMAGE TO EQUIPMENT.

(5) Go into the the right center fuel tank to the defueling valve location (AMM 28-11-00/201).

S 424-233

(6) Do these steps to install the adapter shaft (13):
   (a) Make sure that the index marks (17) on the valve body (10) and adapter shaft (13) are aligned (Fig. 402, View E).

      NOTE: A small misalignment of the index marks is satisfactory.

   (b) Engage the shaft of the adapter shaft (13) with the valve body (10).
   (c) Apply sealant to the shank and the threads of the mounting four bolts (11).

      NOTE: CDCCL - Refer to the task: Airworthiness Limitation Precautions (AMM 28-00-00/201), for important information on Critical Design Configuration Control Limitations (CDCCLs).

      NOTE: This is applicable to Airworthiness Limitation 28-AWL-23.

      1) Use BMS5-45 Class B sealant for the wet installation of the mounting bolts (11).
      2) Make sure the sealant applied to the fasteners is approximately 0.060 inch (1.52 mm) thick.
   (d) Install the mounting bolts (11) and washers (14) to attach the adapter plate (3) of the adapter shaft (13) to the rear spar (2).

BOEING PROPRIETARY - Copyright (C) - Unpublished Work - See title page for details.

(e) Make sure the gap between the adapter shaft (13) and the valve body spline is 0.20 +/- 0.20 inch (5.1 +/- 5.1 mm).

NOTE: If you can not get the correct gap, loosen the support bracket for the valve body (10) and adjust its position to get the correct gap.

S 764-234

(7) On the outside of the fuel tank, measure the bonding resistance between one of the raised serrated surfaces of the adapter plate (3) (bare metal surface) and the rear spar (2).

(a) Make sure the resistance is 0.0005 ohm (0.5 milliohm) or less.

NOTE: CDCCL - Refer to the task: Airworthiness Limitation Precautions (AMM 28-00-00/201), for important information on Critical Design Configuration Control Limitations (CDCCLs).

NOTE: This is applicable to Airworthiness Limitation 28-AWL-23.

S 424-235

(8) On the inside of the tank, apply a fillet seal of BMS5-45 Class B sealant to these components (AMM 51-31-01/201):

NOTE: CDCCL - Refer to the task: Airworthiness Limitation Precautions (AMM 28-00-00/201), for important information on Critical Design Configuration Control Limitations (CDCCLs).

NOTE: This is applicable to Airworthiness Limitation 28-AWL-23.

(a) The four mounting bolts (11).

(b) The periphery of the rear spar penetration and the stationary part of the adapter shaft (13).

NOTE: Make sure the sealant does not touch any part of the adapter shaft (13) that rotates.

BOEING PROPRIETARY - Copyright (C) - Unpublished Work - See title page for details.

S 424-237

(9) On the outside of the fuel tank, apply a fillet seal of BMS5-45 Class B sealant around the periphery of the adapter plate (3) (AMM 51-31-01/201).

NOTE: CDCCL - Refer to the task: Airworthiness Limitation Precautions (AMM 28-00-00/201), for important information on Critical Design Configuration Control Limitations (CDCCLs).

NOTE: This is applicable to Airworthiness Limitation 28-AWL-23.

S 414-241

(10) For the defueling valves in the main fuel tanks, close the applicable main tank access door, 532BB or 632BB (AMM 28-11-01/401).

S 824-244

(11) Do this task: Adapter Shaft Alignment.

H. Install the Index Plate

S 824-245

(1) Do this procedure after you have correctly aligned and marked the alignment position of the index plate (8) and adapter plate (2) per this task: Adapter Shaft Alignment.

S 024-246

(2) Remove the mounting screws (9) and washers to remove the index plate (8) from the adapter plate (3) of the adapter shaft (13).

S 424-247

(3) Do these steps to prepare the index plate (8) and the adapter plate (3) for a sealed electrical faying surface bond (SWPM 20-20-00).
   (a) Protect the alignment reference mark when you clean the index plate (8) and the adapter plate (13) for the electrical bond.

WARNING: DO NOT GET SOLVENTS IN YOUR MOUTH, YOUR EYES, OR ON YOUR SKIN. DO NOT BREATHE THE FUMES FROM SOLVENTS. SOLVENTS ARE DANGEROUS MATERIALS. SOLVENTS CAN BE FLAMMABLE. OBEY THE MATERIAL SAFETY DATA SHEETS (MSDS) FOR SOLVENTS. OBEY LOCAL REGULATIONS FOR THE CORRECT PROCEDURES TO USE OR DISCARD SOLVENTS. SOLVENTS CAN CAUSE INJURIES TO PERSONNEL AND DAMAGE TO EQUIPMENT.

   (b) Final clean the contact surfaces with a cotton wiper soaked with Series 88 solvent (AMM 20-30-88/201).
   (c) Rub dry with a clean, dry cotton wiper.
   (d) Continue to clean and dry the surface until the dry cotton wiper stays clean.

BOEING PROPRIETARY - Copyright (C) - Unpublished Work - See title page for details.

(e) Apply a thin continuous layer of sealant to the serrated surface of the index plate (8) (three locations).

NOTE: CDCCL - Refer to the task: Airworthiness Limitation Precautions (AMM 28-00-00/201), for important information on Critical Design Configuration Control Limitations (CDCCLs).

NOTE: This is applicable to Airworthiness Limitation 28-AWL-23.

1) Use Pro Seal 890A or PR-1440A sealant for the faying surface seal.
2) Make sure the sealant layer is approximately 0.005 inch (0.127 mm) thick.

(f) Apply sealant to the shank and the threads of the mounting screws (9).

NOTE: CDCCL - Refer to the task: Airworthiness Limitation Precautions (AMM 28-00-00/201), for important information on Critical Design Configuration Control Limitations (CDCCLs).

NOTE: This is applicable to Airworthiness Limitation 28-AWL-23.

1) Use Pro Seal 890A or PR-1440A sealant for the wet installation of the mounting screws (9).
2) Make sure the sealant applied to the fasteners is approximately 0.060 inch (1.52 mm) thick.

S 424-248

(4) Do these steps to install the index plate (8).
(a) Align the index plate (8) and the adapter plate (3) with the alignment reference mark that you made during the adapter shaft alignment procedure.
(b) Install the two mounting screws (9) and washers in the top index mounting hole positions.
(c) Install the mounting screw (9) and washer in the bottom index mounting hole position.
(d) Tighten the mounting screws (9) to 22 +/- 1 in-lb (2.5 +/- 0.1 Nm).
(e) Make sure the sealant is continuously squeezed out along the edges of the contact surfaces.
(f) If there are gaps, bubbles or voids in the sealant squeeze out, then disassemble and apply more sealant.
(g) Shape the squeezed out sealant into a fillet seal (AMM 51-31-01/201).

BOEING PROPRIETARY - Copyright (C) - Unpublished Work - See title page for details.

(h) As an option, remove the extra squeezed out sealant.

NOTE: Make sure the sealant that remains is flush with the mating part edges.

S 764-249

(5) Measure the bonding resistance between one of the actuator attachment contact surfaces on the index plate (8) (bare metal surface) and the rear spar (2).

(a) Make sure the bonding resistance is 0.002 ohm (2 milliohms) or less.

S 424-250

(6) Lockwire the mounting screws (9) and the index plate (8) together.

S 794-251

(7) Do this task: Install the Defueling Valve Actuator (AMM 28-26-11/401).

S 374-252

(8) Do this task to apply protective finishes to the bare areas of the rear spar: Apply the Corrosion Resistant Finish (Topcoat) (AMM 28-11-00/701).

NOTE: Re-apply the protective finishes to the rear spar where the electrical bonding probes removed the finishes.

(a) These are the protective finishes:
1) Alodine 600 coating
2) BMS 10-20 coating

I. Operational Test for the Defueling Valve

S 714-075

(1) Do a test of the defueling valve.

(a) Make sure the manual override handle on the defueling valve actuator is in the CLOSED position.
(b) Supply electrical power (AMM 24-22-00/201).
(c) Open the fueling station door, 521QB (AMM 06-44-00/201).
(d) At the fueling control panel, P28, put the applicable DEFUEL VALVES switch to the OPEN position.
(e) Make sure the applicable blue DEFUEL VALVES OPEN light on the fueling control panel comes on when the defueling valve opens.
(f) Make sure the manual override handle on the defueling valve actuator moves to the OPEN position.
(g) Put the applicable DEFUEL VALVES switch to the CLOSE position.
(h) Make sure the applicable DEFUEL VALVES OPEN light goes off.
(i) Make sure the manual override handle on the applicable defueling valve moves to the CLOSED position.

BOEING PROPRIETARY - Copyright (C) - Unpublished Work - See title page for details.

J. Put the Airplane Back to its Usual Condition

S 414-253
(1) Close the fueling station door, 521QB (AMM 06-44-00/201).

S 414-076
(2) For the defueling valves in the main fuel tank, install the applicable trailing edge skin panel, 551TB or 651TB (AMM 06-44-00/201).

S 654-077
(3) Refuel the fuel tank (AMM 12-11-01/301).

S 214-078
(4) Make sure there are no fuel leaks at the defueling valve actuator.

S 864-079
(5) Remove electrical power if it is not necessary (AMM 24-22-00/201).

TASK 28-26-01-824-142

6. Adapter Shaft Alignment (Fig. 402)

A. Equipment
(1) B28009-1, Adapter Shaft Alignment Tool
(2) Torque meter - 0-15 pound-inches, with a resolution of +/- 1 pound-inches (optional)

B. References
(1) AMM 28-26-11/401, Defueling Valve Actuator

C. Access
(1) Location Zones

521	Leading Edge to Front Spar (Left)
532	Main Tank - Inboard of Rib No. 10 (Left)
551	Rear Spar to MLG Support Beam (Left)
632	Main Tank - Inboard of Rib No. 10 (Right)
651	Rear Spar to MLG Support Beam (Right)

(2) Access Panels

521QB	Fueling Station Door (Left)
532BB	Main Tank Access Door (Left)
551TB	Trailing Edge Skin Panel (Left)
632BB	Main Tank Access Door (Right)
651TB	Trailing Edge Skin Panel (Right)

D. Procedure

S 484-143
(1) Do these steps to install the alignment tool in the adapter plate (3):
(a) Remove the top two index screws from the index plate.
(b) Loosen the bottom index screw, but do not remove it.
(c) Install the alignment tool (Fig. 402):

BOEING PROPRIETARY - Copyright (C) - Unpublished Work - See title page for details.

(d) Put the alignment tool in its position with the two guide pins in the holes left by the two index screws that you removed (the scale should be on the top of the tool).
(e) Make sure the spline on the tool engages with the spline on the shaft.

S 824-144
(2) Do these steps to align the adapter shaft (Procedure 1, optional to Procedure 2):

NOTE: This procedure finds the point where the internal valve butterfly engages the valve seal. The torque required to turn the shaft increases as the butterfly engages the seal, then decreases again as the butterfly leaves the other side of the seal. Once the edge of the seal is found, the valve shaft will then be turned to center the butterfly on the seal.

(a) Put the tool handle in the extreme counterclockwise position.
(b) Turn the handle slowly in the clockwise direction at a constant rate while you note the changes in the torque necessary to turn the handle.
(c) Do the previous steps as many times as necessary to find the point in the rotation where the torque necessary to turn the handle increases significantly.
(d) If you cannot find the position in the rotation where the torque increases significantly, then use Procedure 2 below.
(e) Put the shaft in the extreme counterclockwise position again.
(f) Slowly and smoothly turn the handle of the tool clockwise until a distinct increase in torque is found and immediately stop turning the handle.
(g) Read the scale on the tool.

NOTE: This is the point where the valve butterfly starts to engage the edge of the seal.

(h) Turn the handle 13 degrees more in the clockwise direction (the scale on the tool is calibrated in degrees).

NOTE: The valve butterfly is now centered on the valve seal. If you turn the handle past the target value, do not turn the handle back in the counterclockwise direction again. You must start the procedure again with the handle in the extreme counterclockwise position.

BOEING PROPRIETARY - Copyright (C) - Unpublished Work - See title page for details.

S 824-145

(3) Do these steps to align the adapter shaft (Procedure 2, optional to procedure 1):

NOTE: A torque meter is necessary to do this procedure.

(a) Put the tool handle in the extreme counterclockwise position.
(b) Slowly and smoothly turn the tool handle to the extreme clockwise position while you monitor the torque that you apply to the handle.
(c) Write down the maximum torque that you apply to the tool while you turn it from the extreme counterclockwise position to the extreme clockwise position.
(d) Turn the tool back to the extreme counterclockwise position.
(e) Turn the shaft clockwise again at approximately the same rate that you used before.
(f) Stop at the position where the torque increases to approximately two-thirds of the maximum torque that you wrote down before.
(g) Read the scale on the tool at this position.

NOTE: This is the position where valve butterfly starts to engage the edge of the seal.

(h) Turn the handle 13 more degrees in the clockwise direction past the reading from the previous step.

NOTE: The butterfly valve is now centered on the valve seal. If you turn the valve past the target value, do not turn it back in the counterclockwise direction. You must start again with the tool handle in the extreme counterclockwise position.

S 034-146

(4) Tighten the lockscrew on the tool to keep the adapter shaft in its position.

S 824-147

(5) Turn the index plate until the actuator mounting holes in the index plate are aligned with the two upper holes for the actuator mounting screws.

S 824-148

(6) Insert the two align screws into the holes for the actuator mounting screws to hold the index plate in alignment with the mounting plate (this is a final adjustment of the position of the index plate).

BOEING PROPRIETARY - Copyright (C) - Unpublished Work - See title page for details.

S 434-149
(7) Tighten the bottom index screw to a torque of 21-23 pound-inches.

S 084-150
(8) Carefully remove the align screws.

S 084-151
(9) Carefully remove the alignment tool from the index plate.

S 434-152
(10) Install the top two index screws (9) in the index plate (8) and tighten them to a torque of 21-23 pound-inches.

BOEING PROPRIETARY - Copyright (C) - Unpublished Work - See title page for details.

DEFUELING VALVE ACTUATOR - REMOVAL/INSTALLATION

1. General
   A. The defueling valves are installed on the rear spar of the wing. Each defueling valve contains three parts: the actuator, the adapter shaft and the valve body.
   B. You can remove the defueling valve actuator without defueling the fuel tank.
   C. This procedure contains two tasks. The first task removes the defueling valve actuator. The second task installs the defueling valve actuator.
   D. The procedure to remove and install the adapter shaft and the valve body is in AMM 28-26-01/401.

TASK 28-26-11-004-038

2. Remove the Defueling Valve Actuator (Fig. 401, Fig. 401A)
   A. References
      (1) AMM 06-44-00/201, Wings Access Doors and Panels
   B. Access
      (1) Location Zones
          551 Rear Spar to MLG Support Beam (Left)
          651 Rear Spar to MLG Support Beam (Right)

      (2) Access Panels
          551TB Trailing Edge Skin Panel (Left)
          651TB Trailing Edge Skin Panel (Right)

   C. Remove the Defueling Valve Actuator

      S 014-001
      (1) To get access to the defueling valve actuator in the left main fuel tank, remove the left trailing edge skin panel, 551TB (AMM 06-44-00/201).

      S 014-002
      (2) To get access to the defueling valve actuator in the right main fuel tank, remove the right trailing edge skin panel, 651TB (AMM 06-44-00/201).

BOEING PROPRIETARY - Copyright (C) - Unpublished Work - See title page for details.

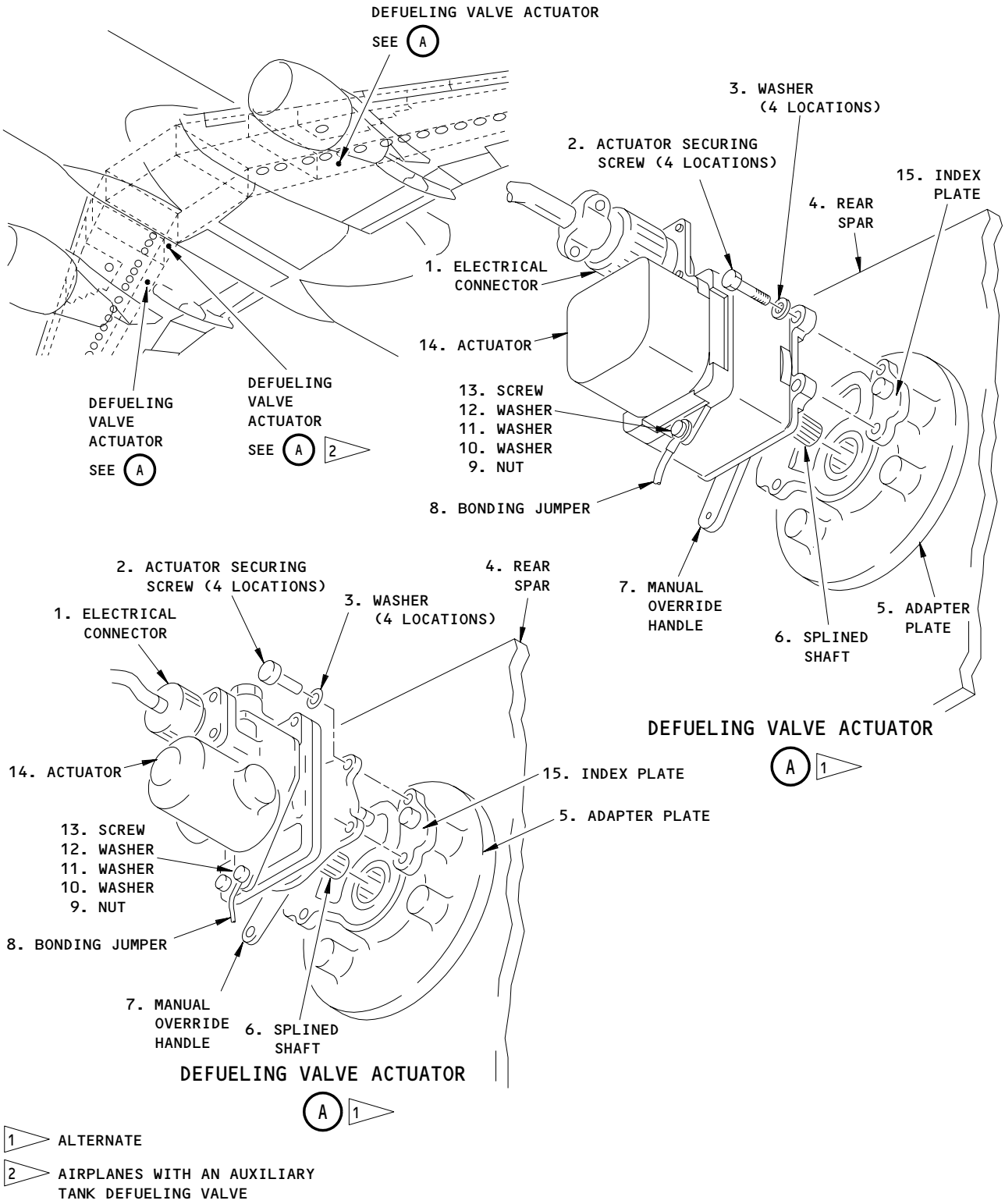

Defueling Valve Actuator Installation
Figure 401

BOEING PROPRIETARY - Copyright (C) - Unpublished Work - See title page for details.

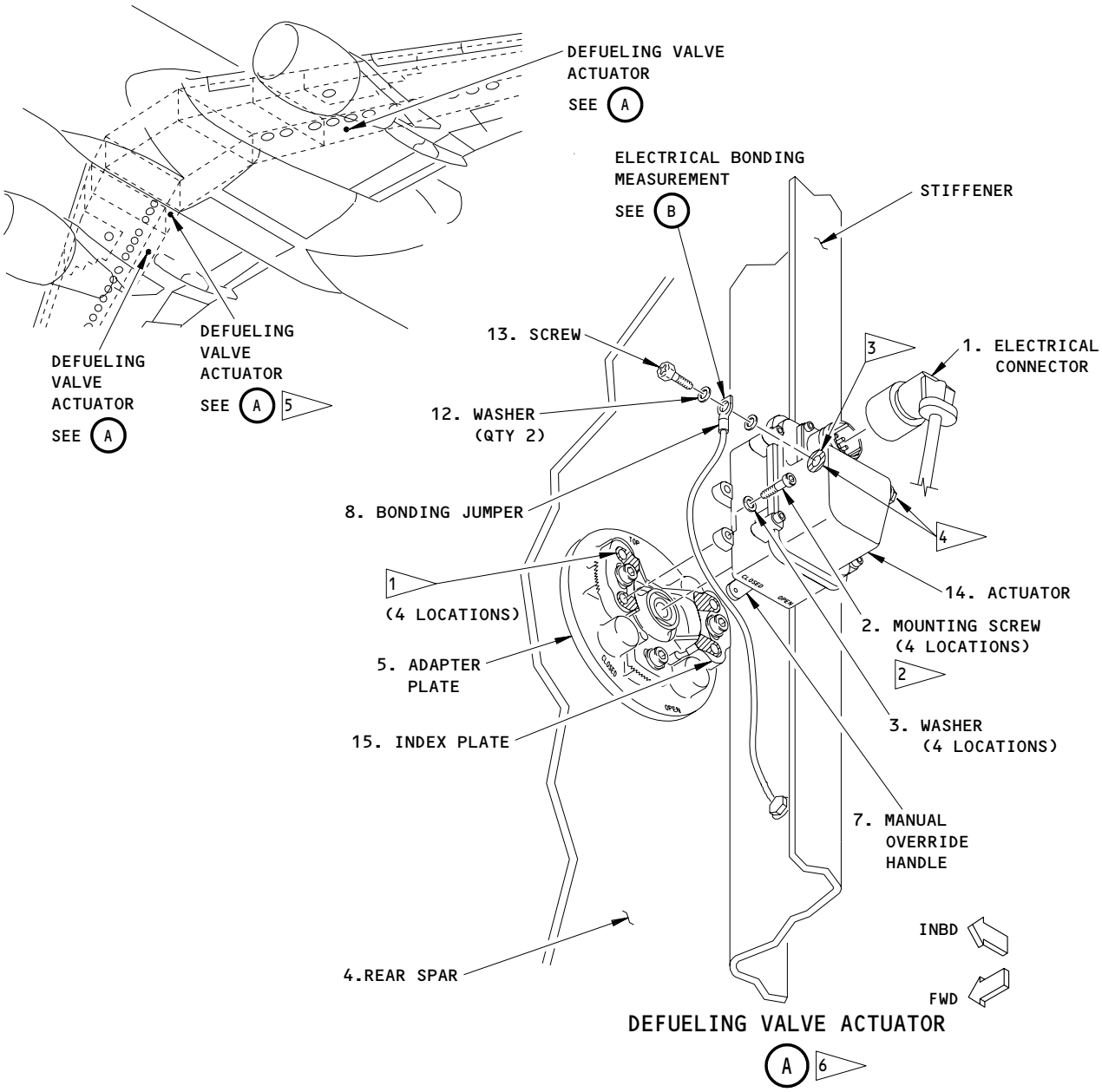

1 PREPARE AND INSTALL THE CONTACT SURFACES OF THE INDEX PLATE AND ACTUATOR FEET (4 LOCATIONS) WITH A SEALED ELECTRICAL FAYING SURFACE BOND (SWPM 20-20-00).

2 APPLY SEALANT TO THE SHANK AND THREADS OF THE MOUNTING SCREWS.

3 PREPARE AND INSTALL THE CONTACT SURFACES OF ACTUATOR AND BONDING JUMPER BUILD-UP WITH A SEALED ELECTRICAL FAYING SURFACE BOND (SWPM 20-20-00). AFTER INSTALLATION, APPLY A FILLET SEAL TO THE BONDING JUMPER INSTALLATION.

4 THE BONDING JUMPER MAY BE INSTALLED ON EITHER SIDE OF THE ACTUATOR.

5 AIRPLANES WITH AN AUXILIARY TANK DEFUELING VALVE.

6 RECOMMENDED

Defueling Valve Actuator Installation
Figure 401A (Sheet 1)

BOEING PROPRIETARY - Copyright (C) - Unpublished Work - See title page for details.

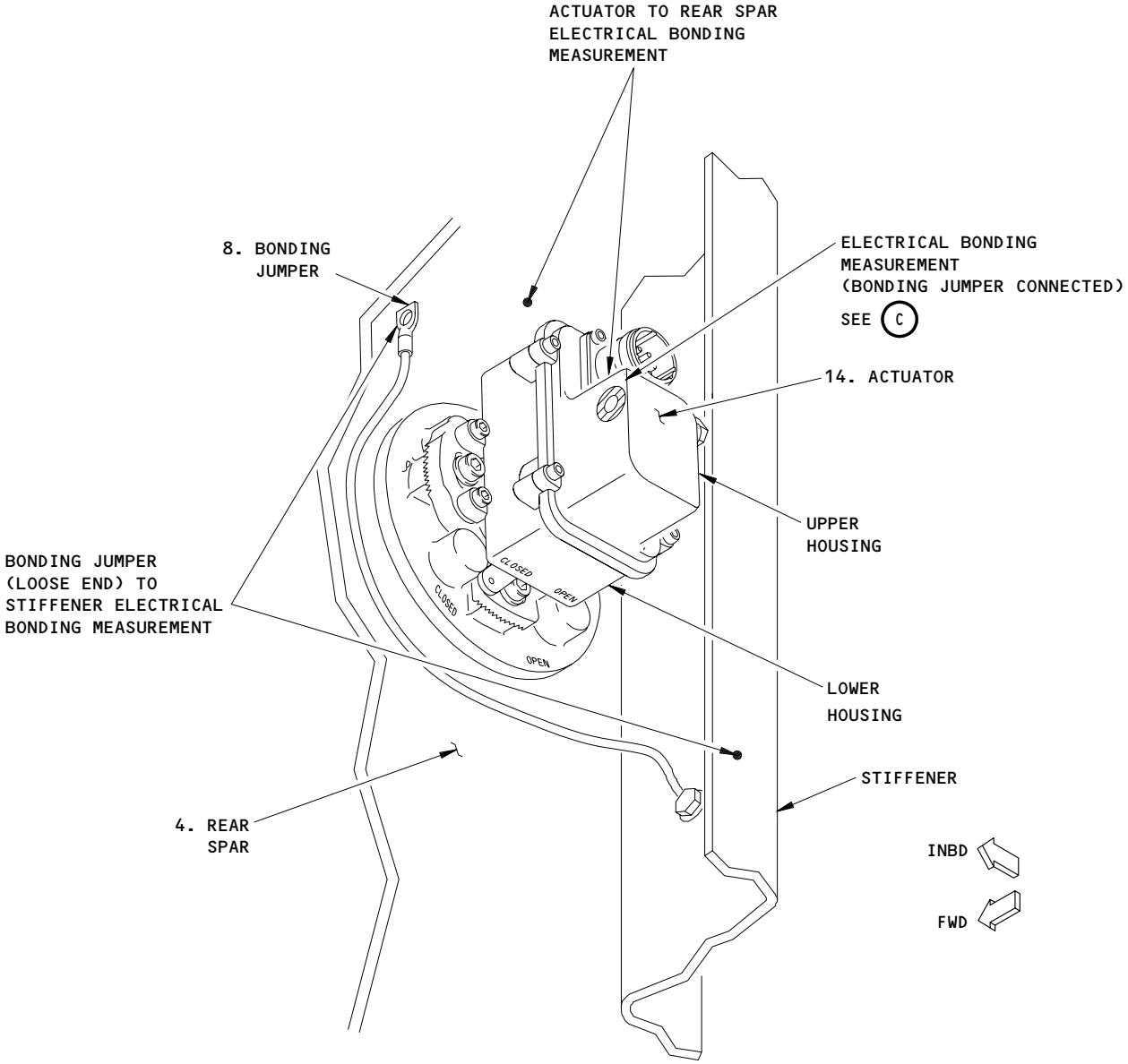

ELECTRICAL BONDING MEASUREMENT
(BONDING JUMPER DISCONNECTED)

B

Defueling Valve Actuator Installation
Figure 401A (Sheet 2)

BOEING PROPRIETARY - Copyright (C) - Unpublished Work - See title page for details.

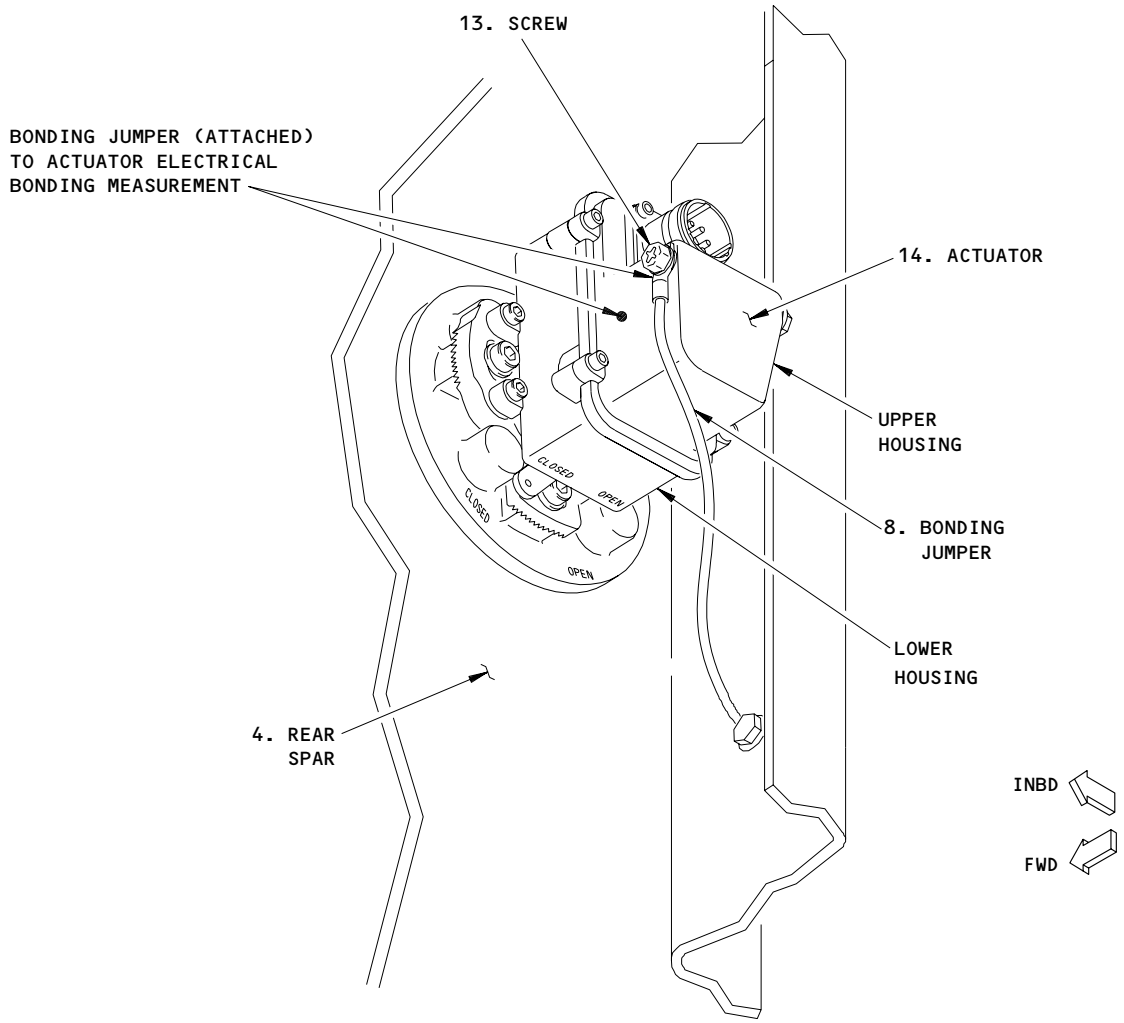

ELECTRICAL BONDING MEASUREMENT
(BONDING JUMPER CONNECTED)

C

Defueling Valve Actuator Installation
Figure 401A (Sheet 3)

BOEING PROPRIETARY - Copyright (C) - Unpublished Work - See title page for details.

S 864-013
(3) Open this circuit breaker on the main power distribution panel, P6, and attach a DO-NOT-CLOSE tag:
(a) 6E7, DEFUEL VALVES

S 864-014
(4) Open this circuit breaker on the APU external power panel, P34, and attach a DO-NOT-CLOSE tag:
(a) 34L4, DEFLNG VALVES

S 034-015
(5) Remove the electrical connector (1) from the actuator (14).

S 864-016
(6) Put the actuator manual override handle (7) in the CLOSED position.

S 034-017
(7) Disconnect the bonding jumper (8) from the actuator (14).

S 034-018
(8) Remove the actuator securing screws (2) that attach the actuator (14) to the adapter plate (5).

S 024-019
(9) Disengage the splined shaft (6) from the adapter plate (5) to remove the actuator (14).

TASK 28-26-11-404-020
3. Install the Defueling Valve Actuator

A. References
(1) AMM 06-44-00/201, Wings Access Doors and Panels
(2) AMM 20-30-88/201, Airplane Structure Cleaning Solvents (Series 88)
(3) AMM 20-30-92/201, Airplane Structure Cleaning Solvents (Series 92)
(4) AMM 24-22-00/201, Electrical Power Control
(5) AMM 28-11-00/701, Fuel Tanks
(6) AMM 51-21-04/701, Alodine Coating
(7) SWPM 20-20-00, Electrical Bonding and Grounds
B. Equipment
(1) Brush - Soft Bristle
(2) BAC5000 - Sealant Removal Tool
C. Consumable Materials
(1) C00064 Coating - Chemical Conversion Coating for Aluminum or Aluminum Alloys, MIL-C-5541 (MIL-C-81706) - Alodine 600 and 1200
(2) G00034 Cotton Wiper, Process Cleaning Absorbent Wiper (cheesecloth, gauze) BMS15-5
(3) C00307 BMS 10-20, Type II Class A - Finish, Corrosion Resistant
(4) G50021 - Scotch-Brite 96W pad
(5) Sealant, BMS 5-45 Class C

BOEING PROPRIETARY - Copyright (C) - Unpublished Work - See title page for details.

(6) Sealant, BMS 5-95 Class B or C
(7) Sealant, BMS 5-142
(8) B01008 Solvent - Series 88
(9) B01012 Solvent - Series 92

D. Access
(1) Location Zones
521 Leading Edge to Front Spar (Left)
551 Rear Spar to MLG Support Beam (Left)
651 Rear Spar to MLG Support Beam (Right)

(2) Access Panels
521QB Fueling Station Door (Left)
551TB Trailing Edge Skin Panel (Left)
651TB Trailing Edge Skin Panel (Right)

E. AIRPLANES WITHOUT ACTUATOR MA20A2027 OR MA30A1001;
Install the Defueling Valve Actuator (Fig. 401)

S 864-021
(1) Move the manual override handle (7) to the CLOSED position.

S 424-022
(2) Put the actuator (14) against the adapter plate (5).

S 214-045
(3) Make sure the splined shaft (6) engages.

S 424-023
(4) Install the actuator securing screws (2) and washers (3) that attach the actuator (14) to the adapter plate (5).

S 434-047
(5) Install the lockwire on the actuator securing screws (2).

S 434-024
(6) Install the screw (13), washers (10, 11, 12), and nut (9) to attach the bonding jumper (8) to the actuator (14).

S 224-025
(7) Make sure the bonding resistance between the actuator (14) and the airplane structure is 0.02 ohms or less (SWPM 20-20-00).

S 434-026
(8) Install the electrical connector (1) on the actuator (14).

S 864-027
(9) Remove the DO-NOT-CLOSE tag and close this cirucit breaker on the P6 panel:
(a) 6E7, DEFUEL VALVES

BOEING PROPRIETARY - Copyright (C) - Unpublished Work - See title page for details.

S 864-028

(10) Remove the DO-NOT-CLOSE tag and close this circuit breaker on the P34 panel:

(a) 34L4, DEFLNG VALVES

F. AIRPLANES WITH ACTUATOR MA20A2027 OR MA30A1001;
Install the Defueling Valve Actuator (Fig. 401A)

S 144-078

(1) Remove the old sealant and clean the actuator (14), index plate (15), and fasteners (if reused).

(a) Use the sealant removal tool and sealant removal tool handle (or equivalent) to remove old sealant from the actuator (14) and index plate (15).

WARNING: DO NOT GET SOLVENTS IN YOUR MOUTH, YOUR EYES, OR ON YOUR SKIN. DO NOT BREATHE THE FUMES FROM SOLVENTS. SOLVENTS ARE DANGEROUS MATERIALS. SOLVENTS CAN BE FLAMMABLE. OBEY THE MATERIAL SAFETY DATA SHEETS (MSDS) FOR SOLVENTS. OBEY LOCAL REGULATIONS FOR THE CORRECT PROCEDURES TO USE OR DISCARD SOLVENTS. SOLVENTS CAN CAUSE INJURIES TO PERSONNEL AND DAMAGE TO EQUIPMENT.

(b) To remove the remaining sealant, grease, oil, dirt, and other contamination from the components, use one of these items soaked with Series 92 solvent (AMM 20-30-92/201).

1) soft bristle brush
2) cotton wiper
3) Scotch-Brite 96W pad

S 424-079

(2) Do these steps to prepare the actuator (14) and the index plate (15) for a sealed electrical faying surface bond (SWPM 20-20-00):

WARNING: DO NOT GET SOLVENTS IN YOUR MOUTH, YOUR EYES, OR ON YOUR SKIN. DO NOT BREATHE THE FUMES FROM SOLVENTS. SOLVENTS ARE DANGEROUS MATERIALS. SOLVENTS CAN BE FLAMMABLE. OBEY THE MATERIAL SAFETY DATA SHEETS (MSDS) FOR SOLVENTS. OBEY LOCAL REGULATIONS FOR THE CORRECT PROCEDURES TO USE OR DISCARD SOLVENTS. SOLVENTS CAN CAUSE INJURIES TO PERSONNEL AND DAMAGE TO EQUIPMENT.

(a) Final clean the contact surfaces with a cotton wiper soaked with Series 88 solvent (AMM 20-30-88/201).

(b) Rub dry with a clean, dry cotton wiper.

(c) Continue to clean and dry the surface until the dry cotton wiper stays clean.

BOEING PROPRIETARY - Copyright (C) - Unpublished Work - See title page for details.

(d) Apply a thin continuous layer of sealant to the actuator contact areas (four locations).

NOTE: CDCCL - Refer to the task: Airworthiness Limitation Precautions (AMM 28-00-00/201), for important information on Critical Design Configuration Control Limitations (CDCCLs).

NOTE: This is applicable to Airworthiness Limitation 28-AWL-23.

1) Use BMS 5-45 Class C or BMS 5-95 Class B or C sealant for the faying surface seal.
2) Make sure the sealant layer is approximately 0.005 inch (0.127 mm) thick.

(e) Apply sealant to the shank and the threads of the screws (2).

NOTE: CDCCL - Refer to the task: Airworthiness Limitation Precautions (AMM 28-00-00/201), for important information on Critical Design Configuration Control Limitations (CDCCLs).

NOTE: This is applicable to Airworthiness Limitation 28-AWL-23.

1) Use BMS 5-45 Class C or BMS 5-95 Class B or C sealant for the wet installation of the screws (2).

NOTE: Use the same sealant on the mounting screws (2) that was used for the faying surface seal.

2) Make sure the sealant applied to the fasteners is approximately 0.060 inch (1.524 mm) thick.

S 424-080

(3) Do these steps to install the actuator (14) to the index plate (15).
(a) Make sure the manual override handle (7) is in the CLOSED position.
(b) Align the splined shaft (6) with the adapter shaft.
(c) Make sure the two spaces for teeth on the adapter shaft align with the splined shaft (6).
(d) Put the splined shaft (6) into the actuator shaft.

NOTE: The contact areas of the actuator automatically align with the mounting points on the index plate.

BOEING PROPRIETARY - Copyright (C) - Unpublished Work - See title page for details.

(e) Install the actuator securing screws (2) and washers (3) that attach the actuator (14) to the index plate (15).

NOTE: Lockwire is not necessary for the actuator securing screws.

(f) Tighten the screws (2) to 20 in-lb (2.3 Nm).
(g) Make sure the sealant is continuously squeezed out along the edges of the contact surfaces.
(h) If there are gaps, bubbles or voids in the sealant squeeze out, then disassemble and apply more sealant.
(i) Shape the squeezed out sealant into a fillet seal.
(j) As an option, remove the extra squeezed out sealant.

NOTE: Make sure the sealant that remains is flush with the mating part edges.

S 764-081
(4) Measure the electrical bonding resistance between the upper housing of the actuator (at the bare metal bonding jumper installation location) and the rear spar (SWPM 20-20-00).
(a) Do this measurement with the bonding jumper (8) and the electrical connector (1) disconnected.
(b) Make sure the bonding jumper (8) does not touch the actuator (14) during the bonding measurement.
(c) Make sure the bonding resistance is 0.0025 ohm (2.5 milliohms) or less.

NOTE: CDCCL - Refer to the task: Airworthiness Limitation Precautions (AMM 28-00-00/201), for important information on Critical Design Configuration Control Limitations (CDCCLs).

NOTE: This is applicable to Airworthiness Limitation 28-AWL-23.

BOEING PROPRIETARY - Copyright (C) - Unpublished Work - See title page for details.

S 764-082

(5) Measure the electrical bonding resistance between the loose end of the bonding jumper (8) and the rear spar (SWPM 20-20-00).

(a) Make sure the bonding resistance is 0.0015 ohm (1.5 milliohms) or less.

NOTE: CDCCL - Refer to the task: Airworthiness Limitation Precautions (AMM 28-00-00/201), for important information on Critical Design Configuration Control Limitations (CDCCLs).

NOTE: This is applicable to Airworthiness Limitation 28-AWL-23.

S 424-083

(6) Do these steps to install the bonding jumper (8) to the actuator (14):

(a) Final clean the contact surfaces with a cotton wiper soaked with Series 88 solvent (AMM 20-30-88/201).

1) Rub dry with a clean, dry cotton wiper.

2) Continue to clean and dry the surface until the dry cotton wiper stays clean.

(b) Apply a thin continuous layer of sealant to both surfaces of the bonding jumper (8) and the washers.

1) Use BMS 5-142 sealant for the faying surface seal.

2) Make sure the sealant layer is approximately 0.005 in. (0.127 mm) thick.

(c) Install the screw (13), washers, and nut (9) to attach the bonding jumper (8) to the actuator (14).

(d) AIPLANES WITHOUT ACTUATOR MA30A1001;
Tighten the screw (13) to 20 in-lb (2.3 Nm).

(e) AIPLANES WITH ACTUATOR MA30A1001;
Tighten the screw (13) to 35 in-lb (4.0 Nm).

(f) Measure the electrical bonding resistance between the upper housing of the actuator (14) and the attached bonding jumper (8) terminal (SWPM 20-20-00).

1) Do not touch the screw (13) when you make the bonding measurement.

2) Make sure the bonding resistance is 0.001 ohm (1 milliohm) or less.

NOTE: CDCCL - Refer to the task: Airworthiness Limitation Precautions (AMM 28-00-00/201), for important information on Critical Design Configuration Control Limitations (CDCCLs).

NOTE: This is applicable to Airworthiness Limitation 28-AWL-23.

BOEING PROPRIETARY - Copyright (C) - Unpublished Work - See title page for details.

(g) Apply a cap seal of BMS 5-142 sealant over the terminal of the bonding jumper (8) and screw (13).

S 374-084
(7) Do this task to apply protective finishes to the bare areas of the rear spar: Apply the Corrosion Resistant Finish (Topcoat) (AMM 28-11-00/701).

NOTE: Re-apply the protective finishes to the rear spar where the electrical bonding probes removed the finishes.

(a) These are the protective finishes:
1) Alodine 600 coating
2) BMS 10-20 coating

S 914-085
(8) Do this task to apply Alodine 1200 coating to any bare areas of the actuator (14): Apply the Alodine Coating (AMM 51-21-04/701).

NOTE: Re-apply the protective coating to the actuator (14) where the electrical bonding probe removed the finish and any bare metal areas around the bonding jumper installation that are not covered with sealant.

S 434-086
(9) Install the electrical connector (1) on the actuator (14).

S 864-087
(10) Remove the DO-NOT-CLOSE tag and close this cirucit breaker on the P6 panel:
(a) 6E7, DEFUEL VALVES

S 864-088
(11) Remove the DO-NOT-CLOSE tag and close this circuit breaker on the P34 panel:
(a) 34L4, DEFLNG VALVES

G. Test of the Defueling Valve Actuator

S 864-029
(1) Supply electrical power (AMM 24-22-00/201).

S 014-030
(2) Open the fueling station door, 521QB (AMM 06-44-00/201).

S 214-050
(3) Make sure the fueling panel light comes on.

S 864-031
(4) Put the DEFUEL VALVES switch to the OPEN position for the defueling valve actuator that you replaced.

BOEING PROPRIETARY - Copyright (C) - Unpublished Work - See title page for details.

S 214-032
(5) Make sure the applicable DEFUEL VALVES OPEN light comes on when the defueling valve opens.

S 864-033
(6) Put the DEFUEL VALVES switch to the CLOSE position.

S 214-055
(7) Make sure the applicable DEFUEL VALVES OPEN light goes off.

S 414-034
(8) Close the fueling station door, 521QB (AMM 06-44-00/201).

S 414-035
(9) For the defueling valve actuator in the left main fuel tank, install the trailing edge skin panel, 551TB (AMM 06-44-00/201).

S 414-036
(10) For the defueling valve actuator in the right main fuel tank, install the trailing edge skin panel, 651TB (AMM 06-44-00/201).

S 864-037
(11) Remove electrical power if it is not necessary (AMM 24-22-00/201).

BOEING PROPRIETARY - Copyright (C) - Unpublished Work - See title page for details.

DEFUELING VALVE ACTUATOR - INSPECTION/CHECK

1. General
   A. This procedure contains a functional check of the bonding resistance check between the rear spar and the defueling valve.

TASK 28-26-11-706-067

2. Defueling Valve Actuator - Bonding Resistance Check (Fig. 601, 601A)
   A. Equipment
      (1) Bonding Meter - Use one of these:
         (a) Bonding Meter - T477W
             Avtron Manufacturing Co.
             Cleveland, OH
         (b) Bonding Meter - Model M1
             (Serial Number A000012 and subsequent)
             BCD Electronics Ltd.
             Vancouver, Canada
   B. Consumable Materials
      (1) G00034 Cotton Wiper, Process Cleaning Absorbent Wiper (Cheese cloth, gauze) BMS 15-5
      (2) Sealant, BMS 5-142
      (3) B01008 Solvent - Series 88
   C. References
      (1) AMM 20-30-88/201, Airplane Structure Cleaning Solvents (Series 88)
      (2) AMM 06-44-00/201, Wings Access Doors and Panels
      (3) AMM 32-00-15/201, Landing Gear Door Locks
      (4) AMM 32-00-20/201, Landing Gear Downlocks
      (5) SWPM 20-20-00, Electrical Bonding and Grounds
   D. Access
      (1) Location Zones
          551 Rear Spar to MLG Support Beam (Left)
          651 Rear Spar to MLG Support Beam (Right)

      (2) Access Panels
          551TB Trailing Edge Skin Panel (Left)
          651TB Trailing Edge Skin Panel (Right)

   E. Prepare for the Procedure

BOEING PROPRIETARY - Copyright (C) - Unpublished Work - See title page for details.

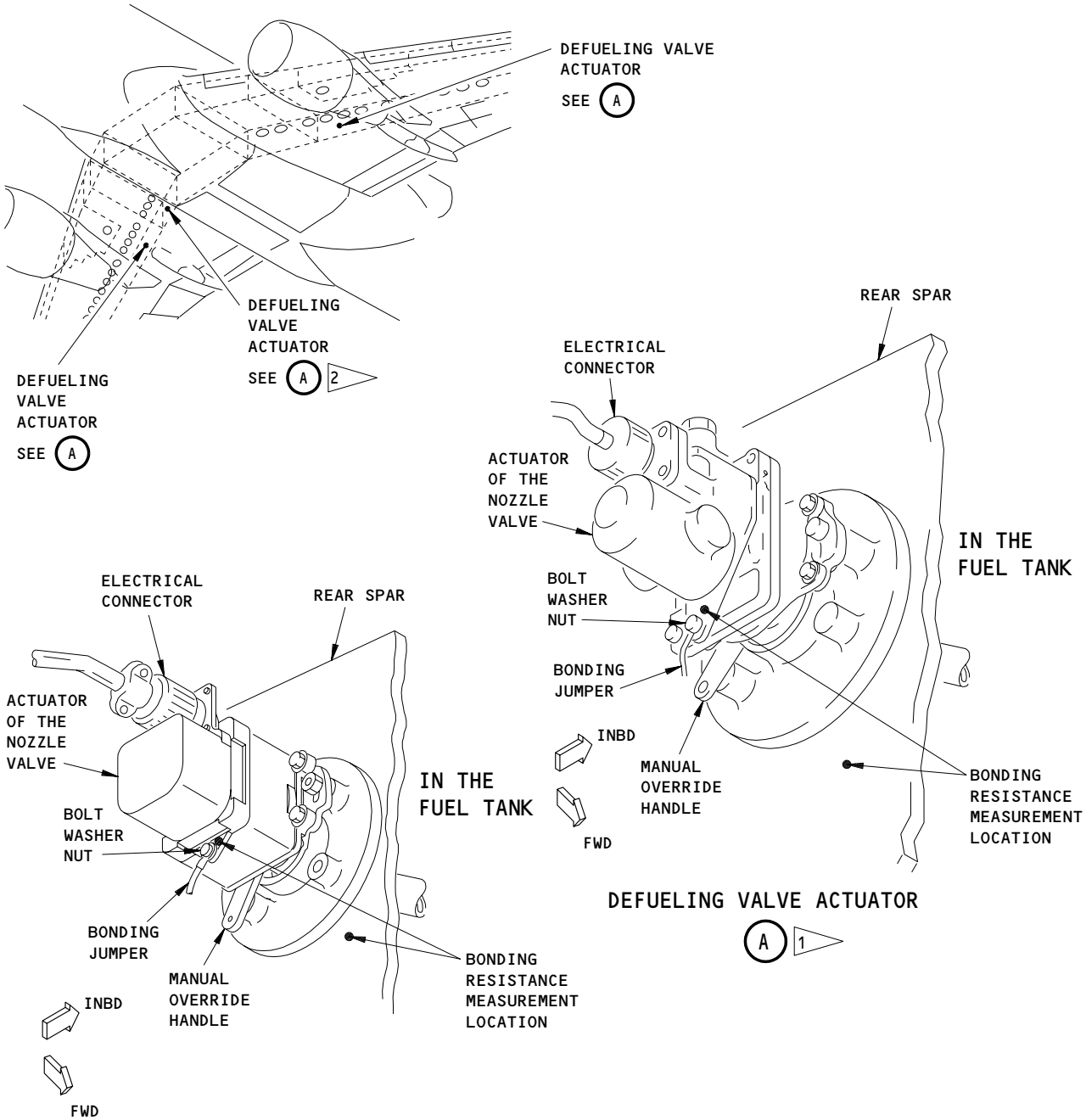

1 ALTERNATE (EXAMPLE)

2 AIRPLANES WITH AN AUXILIARY FUEL TANK

Defueling Valve Actuator Inspection
Figure 601

BOEING PROPRIETARY - Copyright (C) - Unpublished Work - See title page for details.

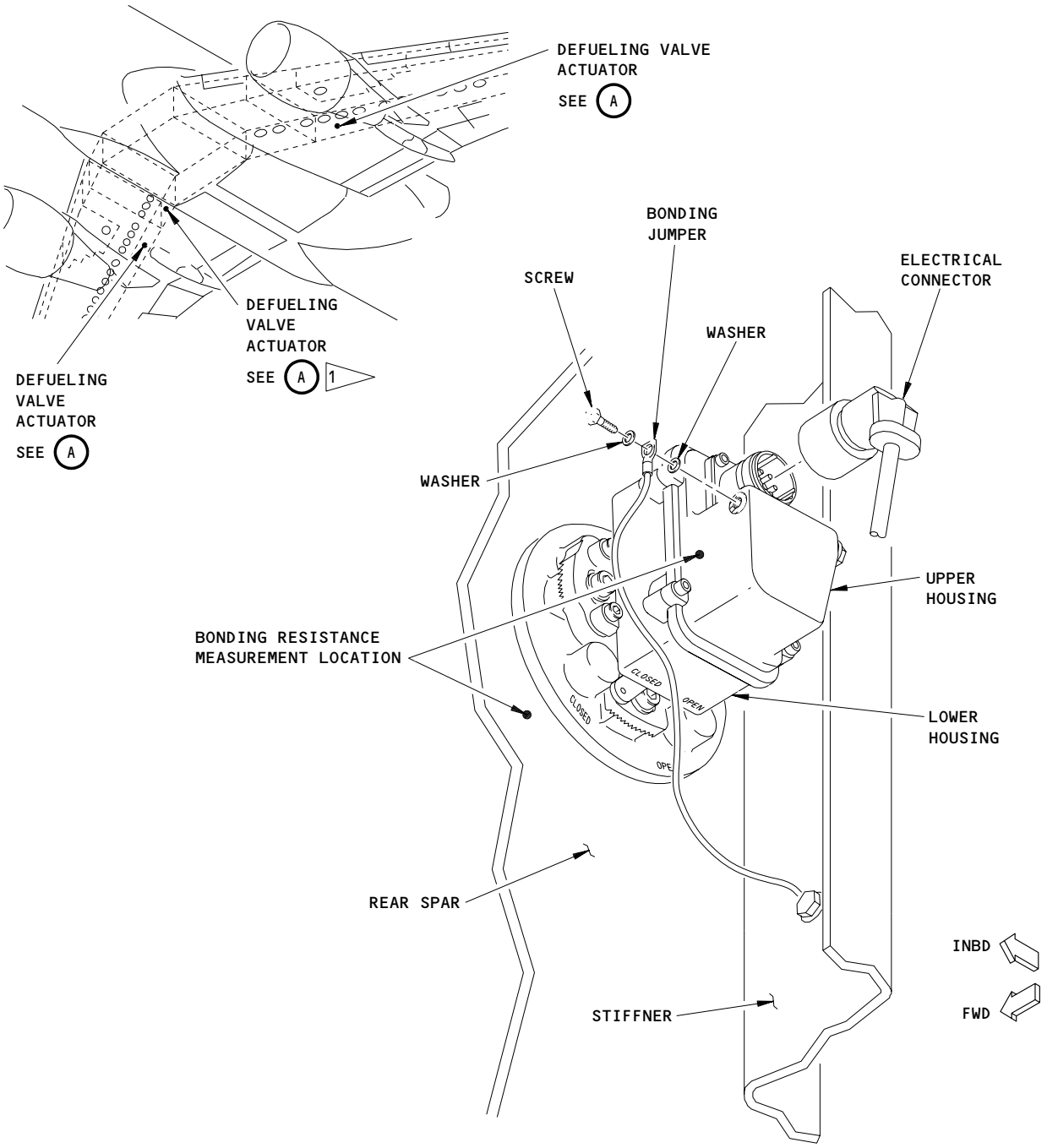

DEFUELING VALVE ACTUATOR
(EXAMPLE)
A

1 AIRPLANES WITH AN AUXILIARY TANK DEFUELING VALVE.

Defueling Valve Actuator Inspection
Figure 601A

EFFECTIVITY
AIRPLANES WITH ACTUATOR MA20A2027 OR MA30A1001

1392942

BOEING PROPRIETARY - Copyright (C) - Unpublished Work - See title page for details.

S 486-069

WARNING: MAKE SURE THAT THE DOWNLOCKS ARE INSTALLED IN ALL OF THE LANDING GEAR. WITHOUT THE DOWNLOCKS, THE LANDING GEAR CAN RETRACT AND CAUSE INJURIES TO PERSONS AND DAMAGE TO EQUIPMENT.

(1) Make sure the downlocks are installed in the nose and main landing gear (AMM 32-00-20/201).

S 486-070

WARNING: OBEY THE INSTALLATION PROCEDURE FOR THE DOOR LOCK. THE DOORS OPEN AND CLOSE QUICKLY. THE MOVEMENT OF THE DOORS CAN CAUSE INJURIES TO PERSONS AND DAMAGE TO EQUIPMENT.

(2) Open the doors for the landing gear and install the door locks (AMM 32-00-15/201).

S 866-071

(3) Open these circuit breakers and attach DO-NOT-CLOSE tags:
   (a) On the main power distribution panel, P6:
      1) 6E7, DEFUEL VALVES
   (b) On the APU external power panel, P34:
      1) 34L4, DEFUELING VALVES

S 016-002

(4) To get access to the defueling valve actuator in the left main fuel tank, remove the left trailing edge skin panel, 551TB (AMM 06-44-00/201).

S 016-003

(5) To get access to the defueling valve actuator in the right main fuel tank, remove the right trailing edge skin panel, 651TB (AMM 06-44-00/201).

S 026-073

(6) Disconnect the electrical connector from the actuator.

F. AIRPLANES WITHOUT ACTUATOR MA20A2027 OR MA30A1001; Electrical Bonding Measurement

S 026-074

(1) Disconnect the bonding jumper from the actuator.

BOEING PROPRIETARY - Copyright (C) - Unpublished Work - See title page for details.

S 766-075
(2) Measure the bonding resistance between the actuator and the rear spar (SWPM 20-20-00).
(a) Make sure the resistance is 5 milliohms (0.005 ohm) or less.

S 426-076
(3) Install the screw, washers, and nut to attach the bonding jumper to the actuator.

G. AIRPLANES WITH ACTUATOR MA20A2027 OR MA30A1001;
Electrical Bonding Measurement

S 026-077
(1) Disconnect the bonding jumper from the actuator.

S 766-078
(2) Measure the bonding resistance between the actuator and the rear spar (SWPM 20-20-00).
(a) Make sure the resistance is 5 milliohms (0.005 ohm) or less.

S 426-079
(3) Do these steps to install the bonding jumper to the actuator:
(a) Final clean the contact surfaces with a cotton wiper soaked with Series 88 solvent (AMM 20-30-88/201).
1) Clean the surface until the dry cotton wiper stays clean.
(b) Apply a thin continuous layer of sealant to both surfaces of the bonding jumper and the washers.
1) Use the BMS 5-142 sealant for the faying surface seal.
(c) Install the screw, washers, and nut to attach the bonding jumper to the actuator.
1) AIRPLANES WITHOUT ACTUATOR MA30A1001;
Tighten the screw to 20 in-lb (2.3 Nm).
2) AIRPLANES WITH ACTUATOR MA30A1001;
Tighten the screw to 35 in-lb (4.0 Nm).
(d) Measure the electrical bonding resistance between the upper housing of the actuator and the attached bonding jumper terminal (SWPM 20-20-00).
1) Do not touch the screw when you make the bonding measurement.

BOEING PROPRIETARY - Copyright (C) - Unpublished Work - See title page for details.

2) Make sure the bonding resistance is 0.001 ohm (1 milliohm) or less.

NOTE: CDCCL - Refer to the task: Airworthiness Limitation Precautions (AMM 28-00-00/201), for important information on Critical Design Control Configuration Limitations (CDCCLs).

NOTE: This is applicable to Airworthiness Limitation 28-AWL-23.

(e) Apply a cap seal of BMS 5-142 sealant over the terminal of the bonding jumper and the screw.

H. Put the Airplane Back to Its Usual Condition

S 426-082

(1) Connect the electrical connector on the actuator.

S 416-083

(2) Install the applicable left or right trailing edge skin panel, 551TB or 651TB (AMM 06-44-00/201).

S 866-084

(3) Remove the DO-NOT-CLOSE tags and close these circuit breakers:
(a) On the main power distribution panel, P6:
1) 6E7, DEFUELING VALVES
(b) On the APU external power panel, P34:
1) 34L4, DEFUELING VALVES

S 086-086

WARNING: OBEY THE REMOVAL PRECEDURE FOR THE DOOR LOCKS. THE DOORS OPEN AND CLOSE QUICKLY. THE MOVEMENT OF THE DOORS CAN CAUSE INJURIES TO PERSONS AND DAMAGE TO EQUIPMENT.

(4) Remove the door locks from the main gear doors and close the doors (AMM 32-00-15/201).

BOEING PROPRIETARY - Copyright (C) - Unpublished Work - See title page for details.

FUEL JETTISON SYSTEM - DESCRIPTION AND OPERATION

1. General
   A. The fuel jettison system lets fuel be discarded from the auxiliary fuel tank during an in-flight emergency to decrease the weight of the airplane to a permitted landing weight. Fuel from the fuel tanks is pumped through the fuel jettison manifold and then let out of the fuel tanks at the fuel jettison nozzles.
   B. MTH 276;
      The fuel jettison system does not operate because it is not fully installed. The fuel jettison manifold and the fuel jettison control module are installed.
   C. SAS 155-157, 165-167 PRE-SB 28-38;
      SAS 050, 051, 162-164 PRE-SB 28-25;
      MTH 277, 278, 280 PRE-SB 28-38;
      MTH 279;
      The fuel jettison system does not operate at full capacity because the jettison pump circuit breakers and pressure switches are inoperative.
2. Fuel Jettison Manifold (Fig. 1, 2)
   A. Fuel that is discarded goes through the fuel jettison manifold during the fuel jettison operation. The fuel jettison manifold is found inside the fuel tanks and extends from wing to wing from between ribs 28 and 29 in each wing. At each end of the fuel jettison manifold, there is a fuel jettison nozzle.
   B. The fueling manifold (AMM 28-21-00/001) is also used as the fuel jettison manifold.
3. Fuel Jettison Nozzle
   A. The two fuel jettison nozzles let fuel out of the airplane at the ends of the fuel jettison manifold. Each fuel jettison nozzle attaches to the jettison manifold at rear spar of the wing between ribs 28 and 29.
4. Fuel Jettison Nozzle Valve (Fig. 4)
   A. The two fuel jettison nozzle valves (referred to as "the nozzle valves") control the fuel flow to the fuel jettison nozzles. A nozzle valve attaches to the fuel jettison manifold inboard of rib 28 in each main fuel tank.
      (1) The nozzle valve is found in the main fuel tank, installed on a bracket that attaches to the wing rear spar.
      (2) The nozzle valve has:
         (a) A valve housing
         (b) A disc type valve that turns
         (c) Connections to the fuel jettison manifold
         (d) An adapter shaft with indexed splines and a universal joint.

BOEING PROPRIETARY - Copyright (C) - Unpublished Work - See title page for details.

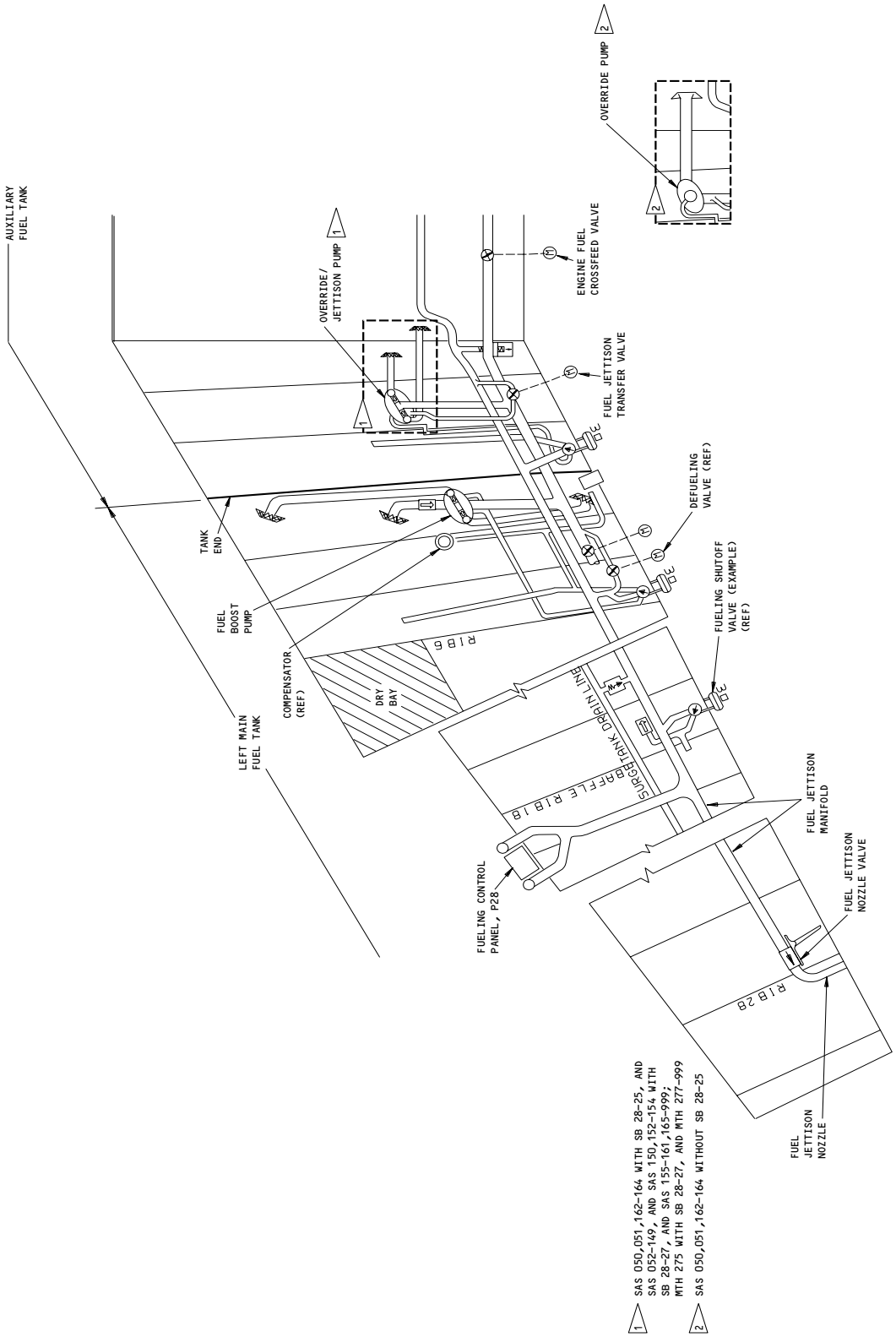

Fuel Jettison System - Left Wing
Figure 1

BOEING PROPRIETARY - Copyright (C) - Unpublished Work - See title page for details.

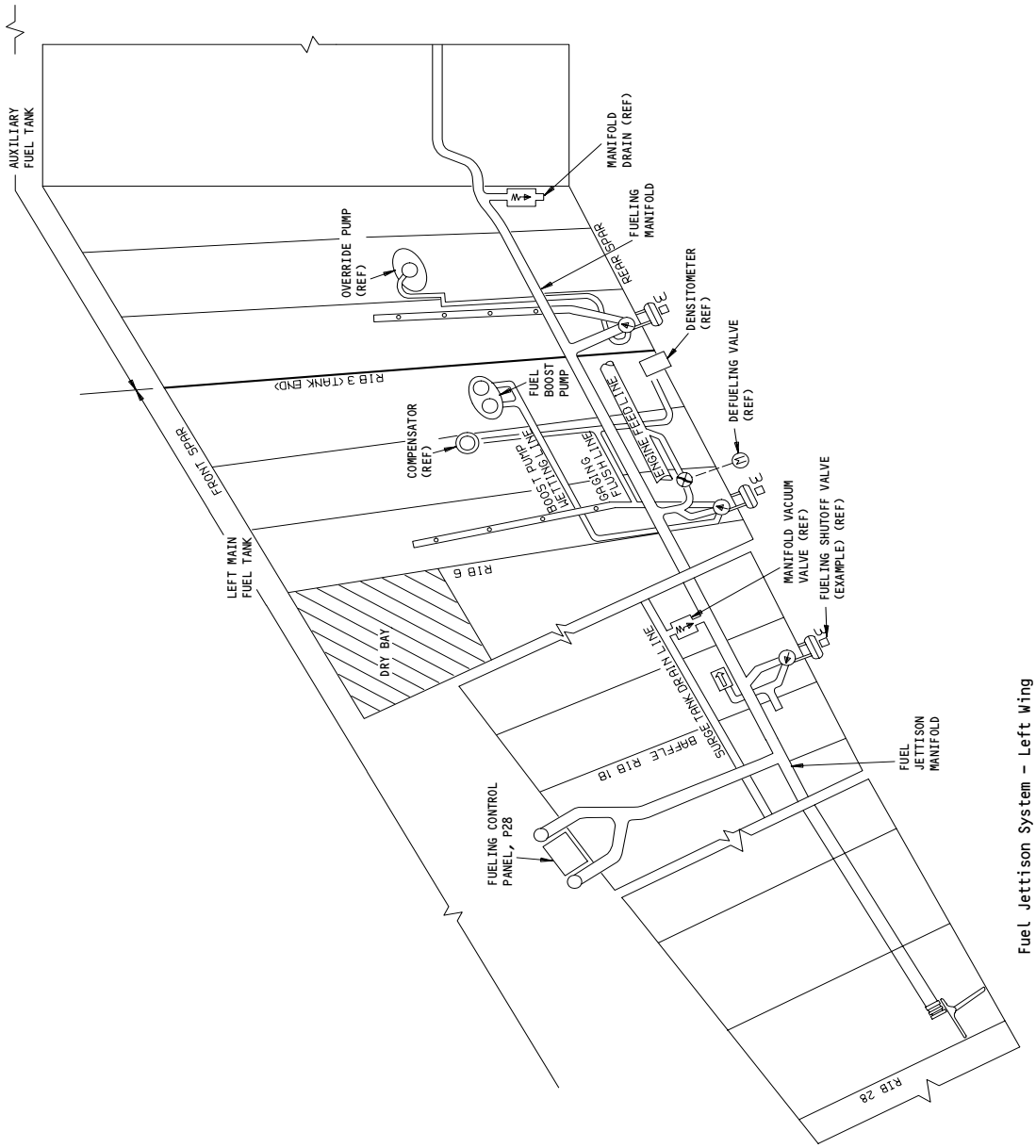

Fuel Jettison System - Left Wing
Figure 1A

BOEING PROPRIETARY - Copyright (C) - Unpublished Work - See title page for details.

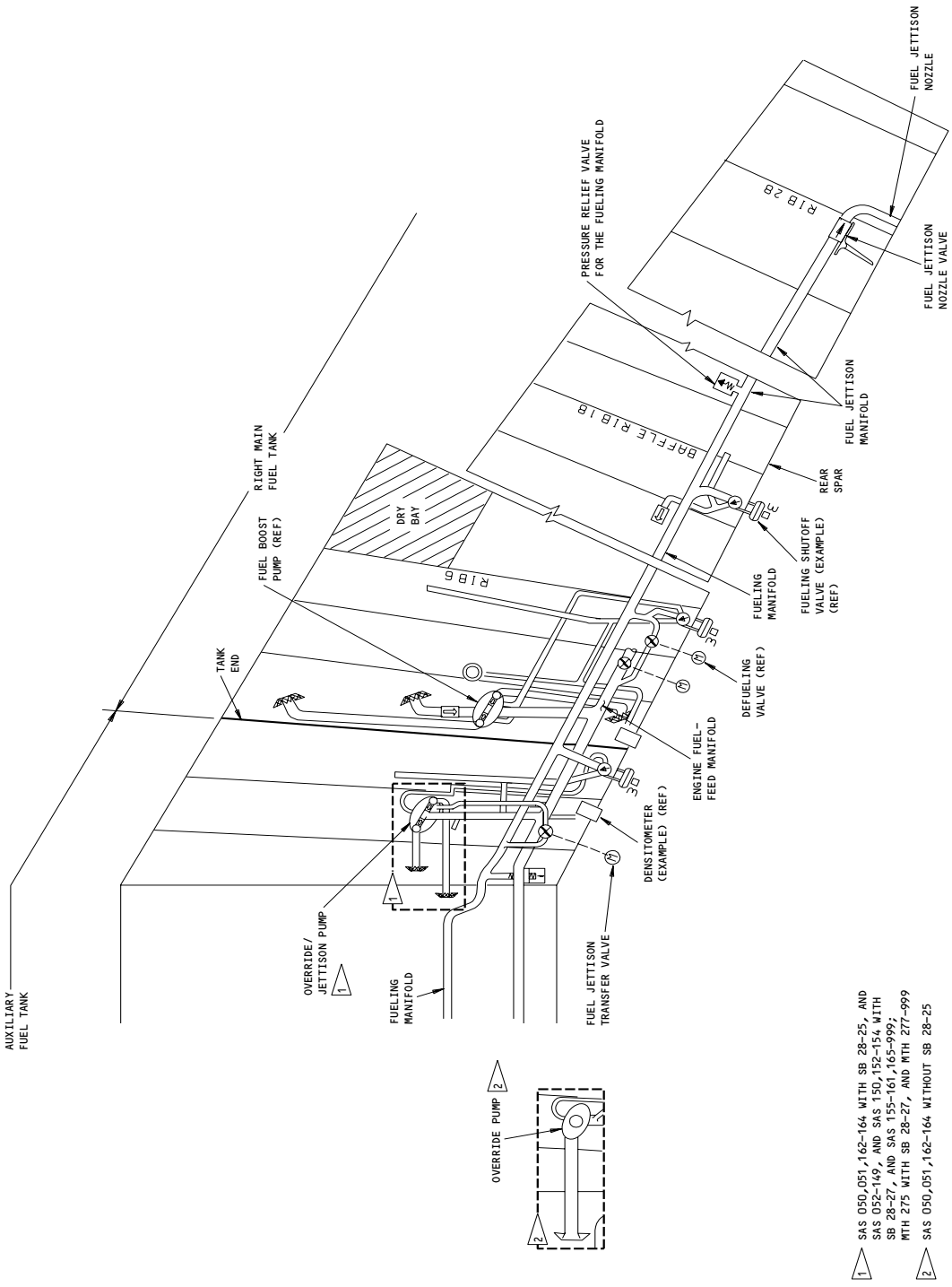

Fuel Jettison System - Right Wing
Figure 2

BOEING PROPRIETARY - Copyright (C) - Unpublished Work - See title page for details.

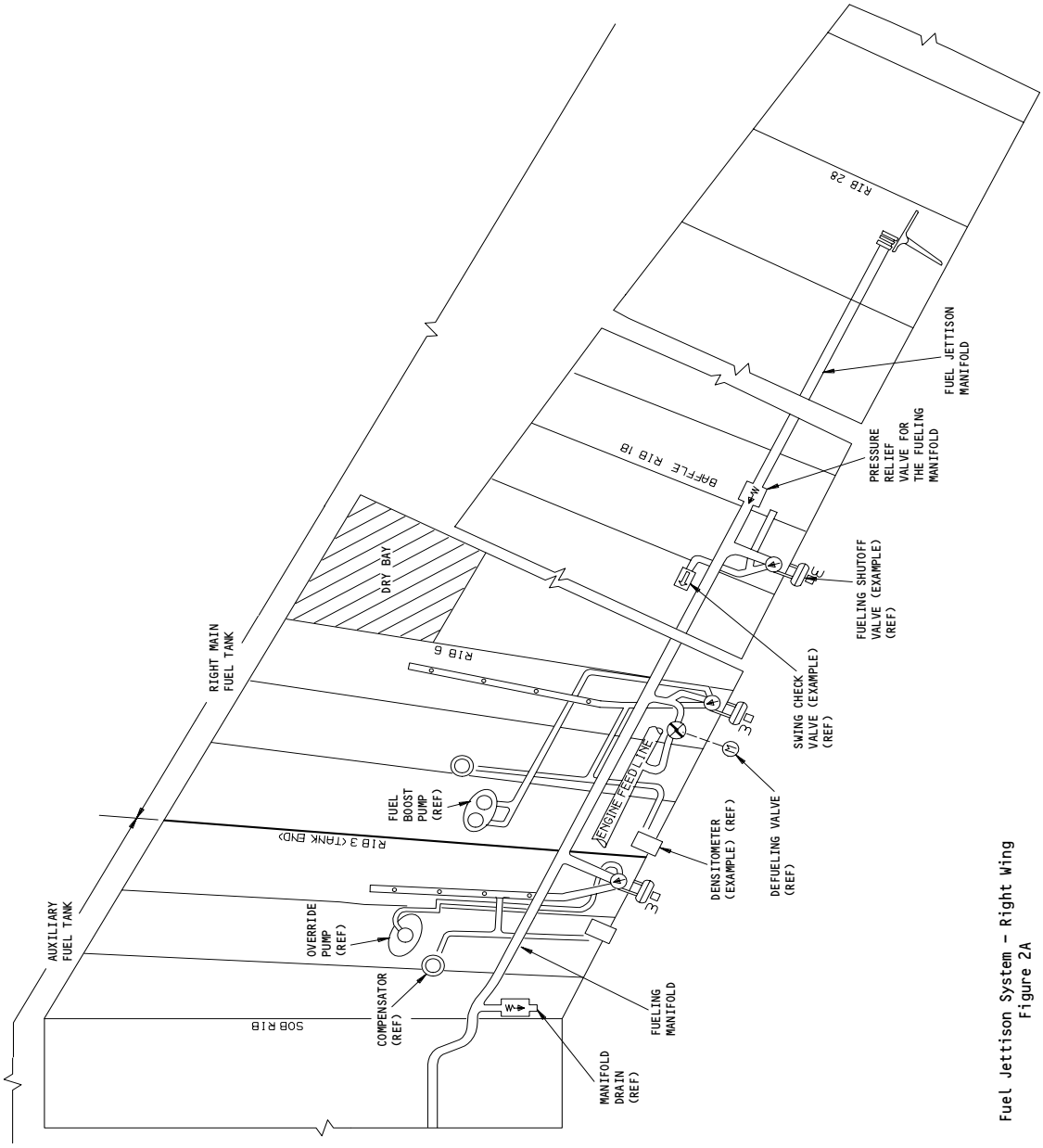

Fuel Jettison System - Right Wing
Figure 2A

BOEING PROPRIETARY - Copyright (C) - Unpublished Work - See title page for details.

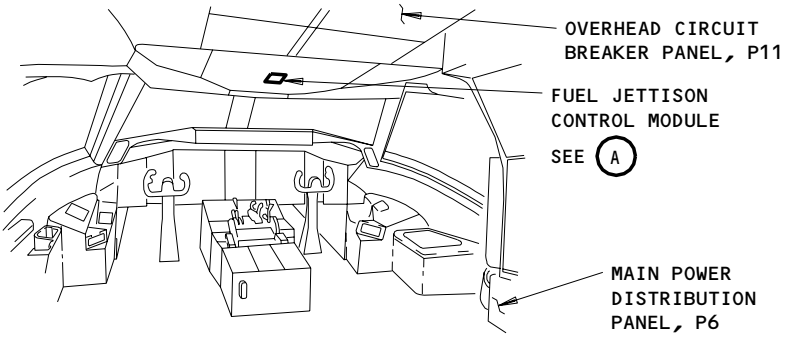

FLIGHT COMPARTMENT

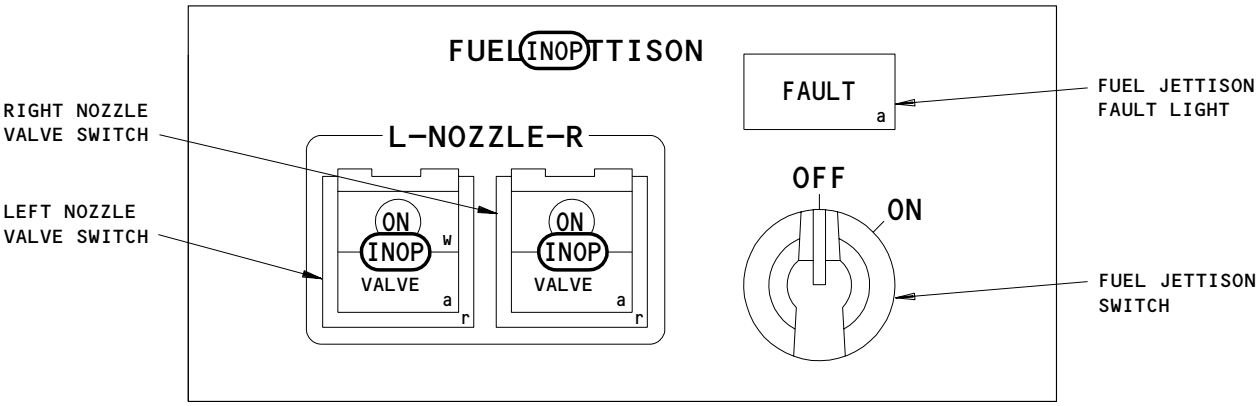

FUEL JETTISON CONTROL MODULE

A 1

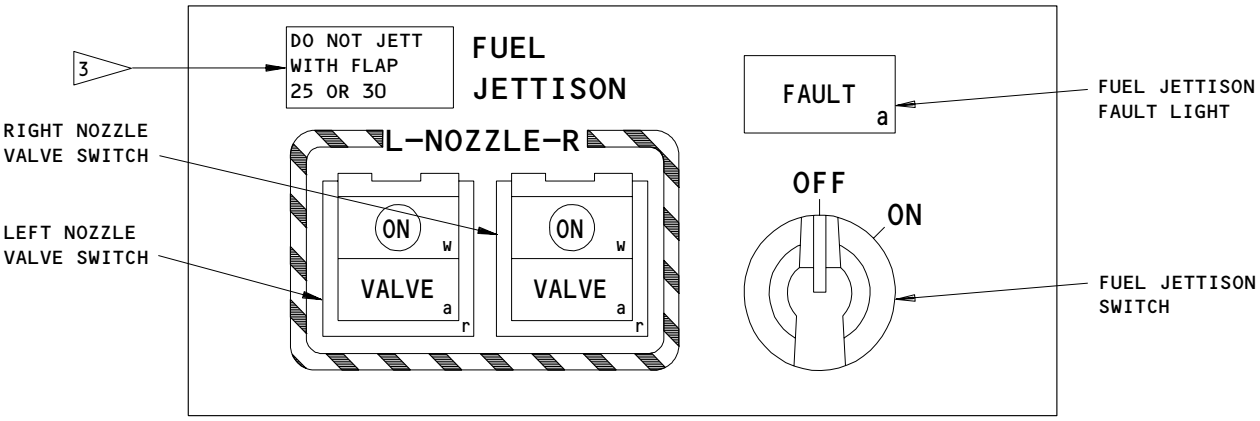

FUEL JETTISON CONTROL MODULE

A 2

1 MTH 276

2 MTH 275 WITH SB 28-27, AND MTH 277-999; SAS 050-149, AND SAS 150,152-154 WITH SB 28-27, AND SAS 155-999

3 MTH 277,278,280 WITHOUT SB 28-38; SAS 155-157,165-167 WITHOUT SB 28-38, AND SAS 050,051,162-164 WITHOUT SB 28-25

Fuel Jettison Control Module
Figure 3

BOEING PROPRIETARY - Copyright (C) - Unpublished Work - See title page for details.

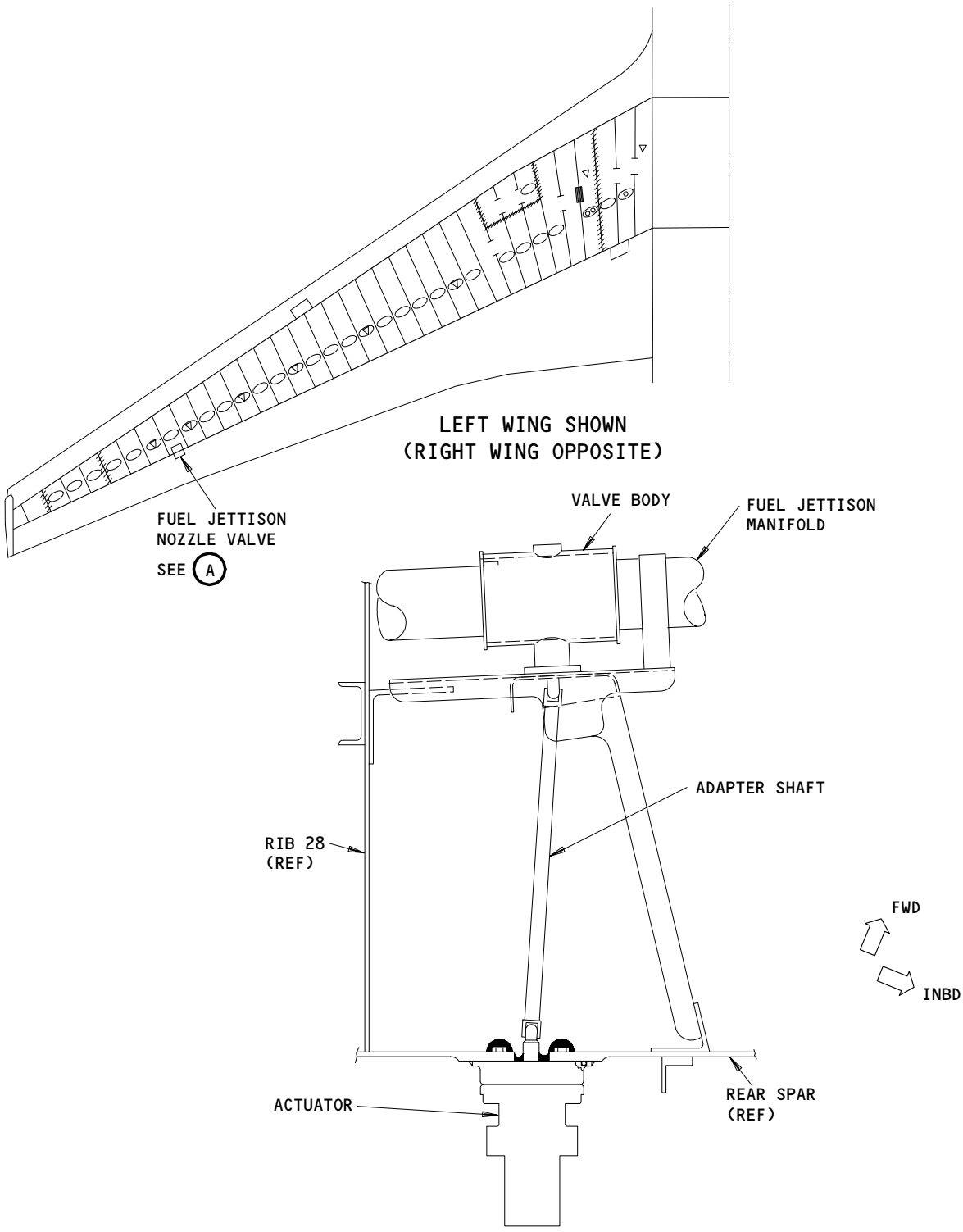

FUEL JETTISON NOZZLE VALVE

A

Fuel Jettison Nozzle valve
Figure 4

BOEING PROPRIETARY - Copyright (C) - Unpublished Work - See title page for details.

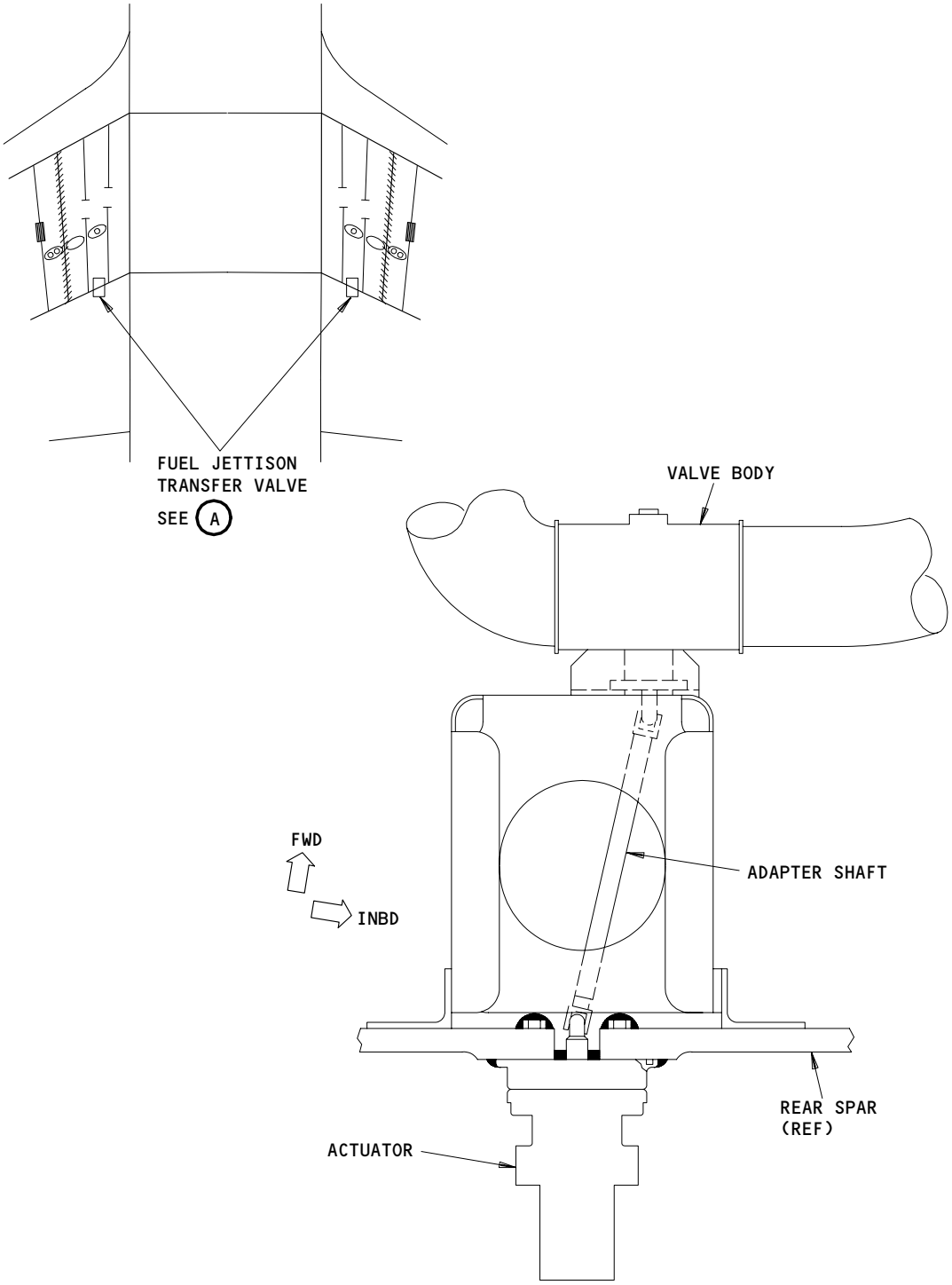

FUEL JETTISON TRANSFER VALVE
(LEFT SIDE SHOWN, RIGHT SIDE OPPOSITE)

A

Fuel Jettison Transfer Valve
Figure 5

BOEING PROPRIETARY - Copyright (C) - Unpublished Work - See title page for details.

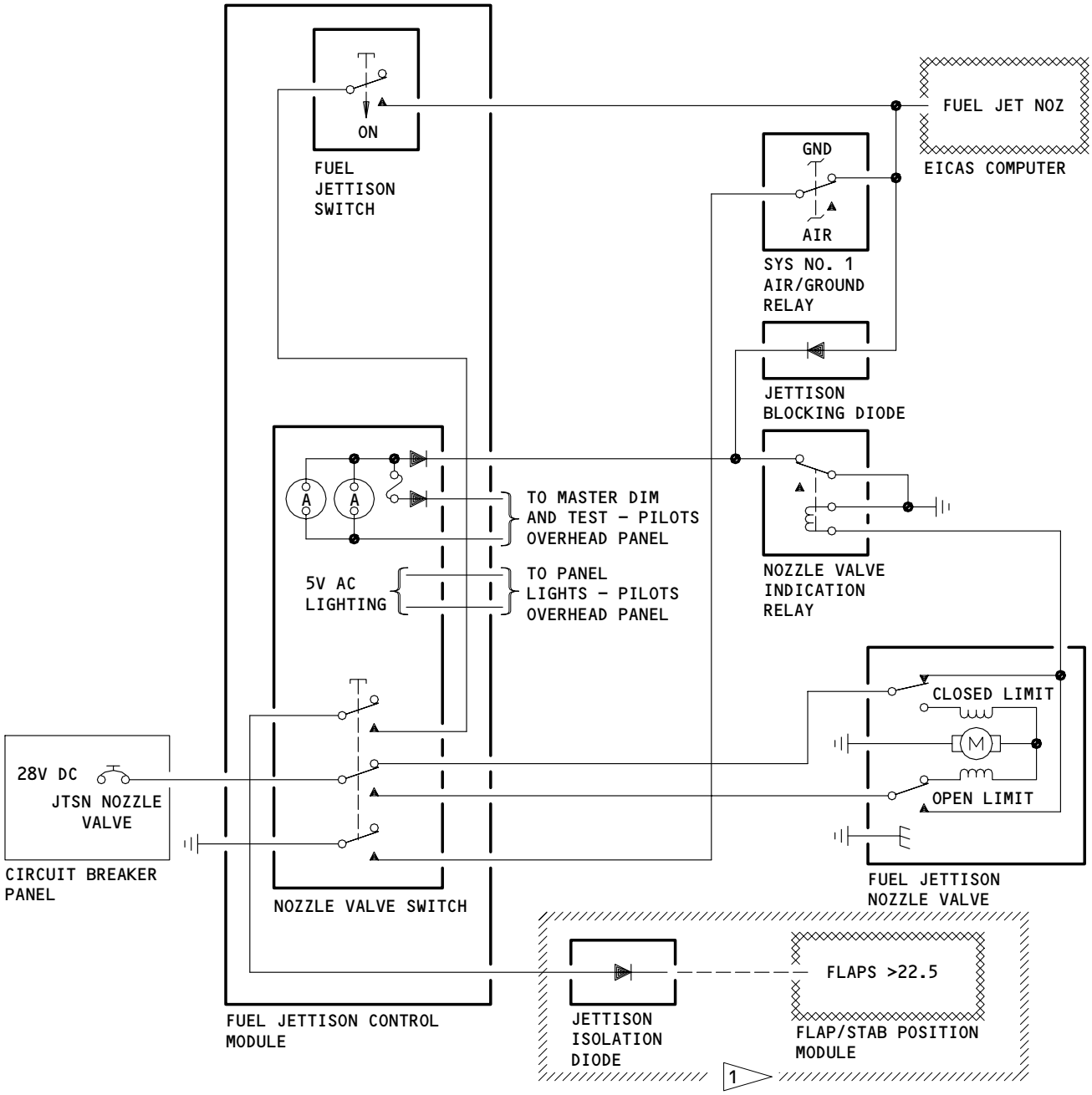

1 MTH 277,278,280 WITHOUT SB 28-38, AND
MTH 279;
SAS 155-157,165-167 WITHOUT SB 28-38, AND
SAS 050,051,162-164 WITHOUT SB 28-25

Fuel Jettison Nozzle Valve Control System Simplified Schematics
Figure 6

BOEING PROPRIETARY - Copyright (C) - Unpublished Work - See title page for details.

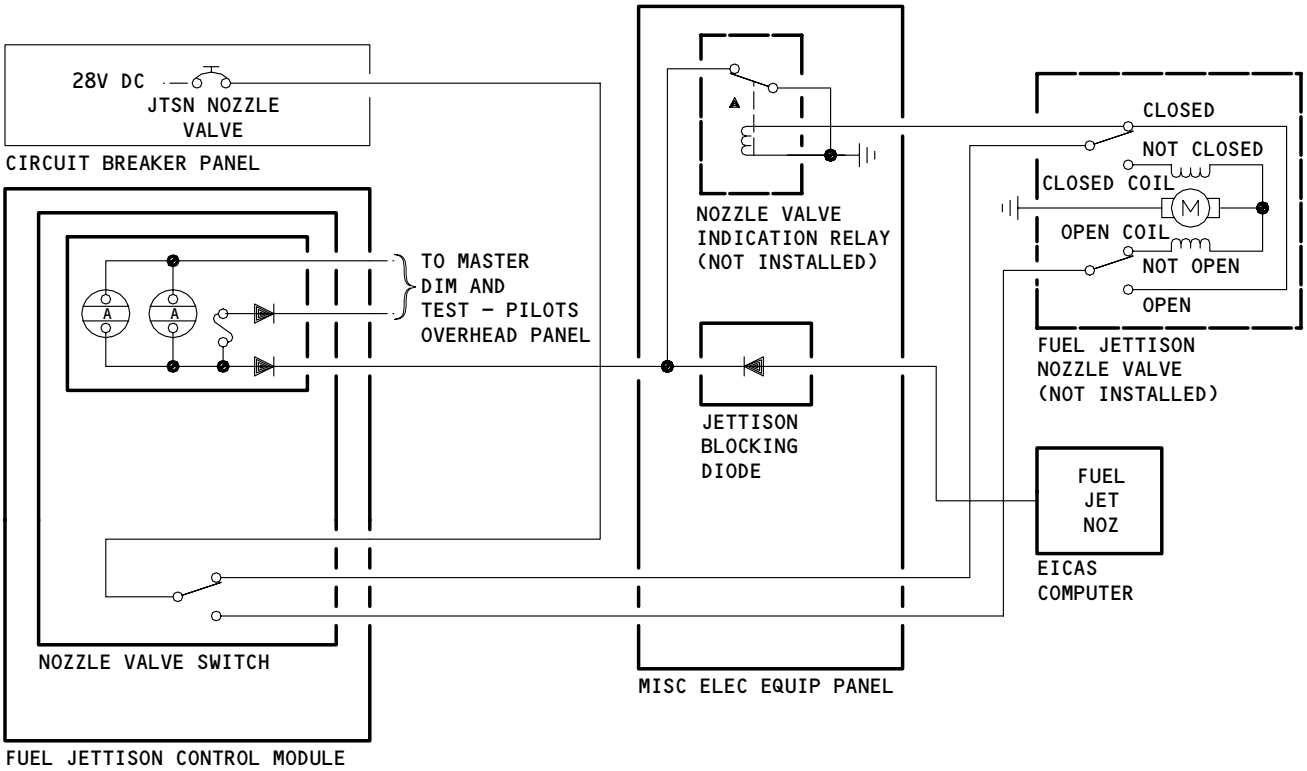

Fuel Jettison Nozzle Valve Control System Simplified Schematics
Figure 6A

BOEING PROPRIETARY - Copyright (C) - Unpublished Work - See title page for details.

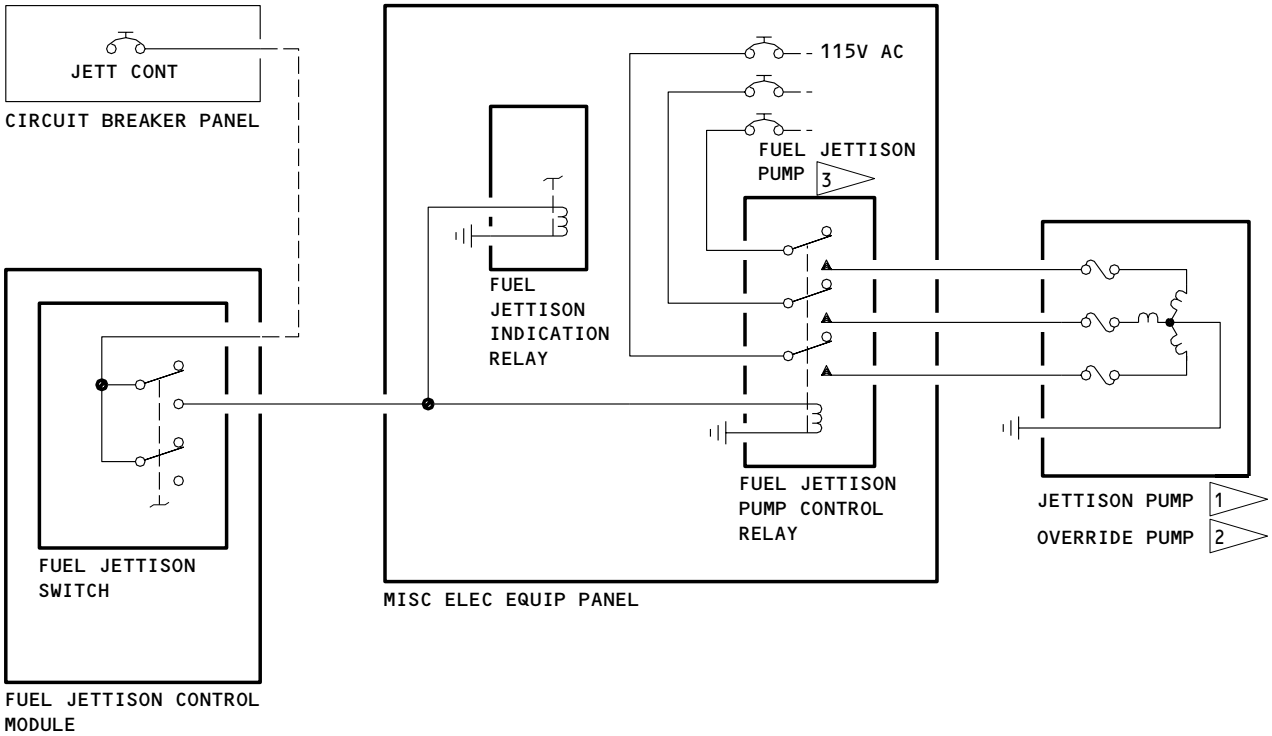

1 SAS 050,051,162-164 WITH SB 28-25, AND SAS 052-149, AND SAS 150,152-154 WITH SB 28-27, AND SAS 155-161,165-999; MTH 275 WITH SB 28-27, AND MTH 277-999

2 SAS 050,051,162-164 WITHOUT SB 28-25

3 INOP ON SAS 165 WITHOUT SB 28-38

Fuel Jettison Pumps System Simplified Schematics
Figure 7

BOEING PROPRIETARY - Copyright (C) - Unpublished Work - See title page for details.

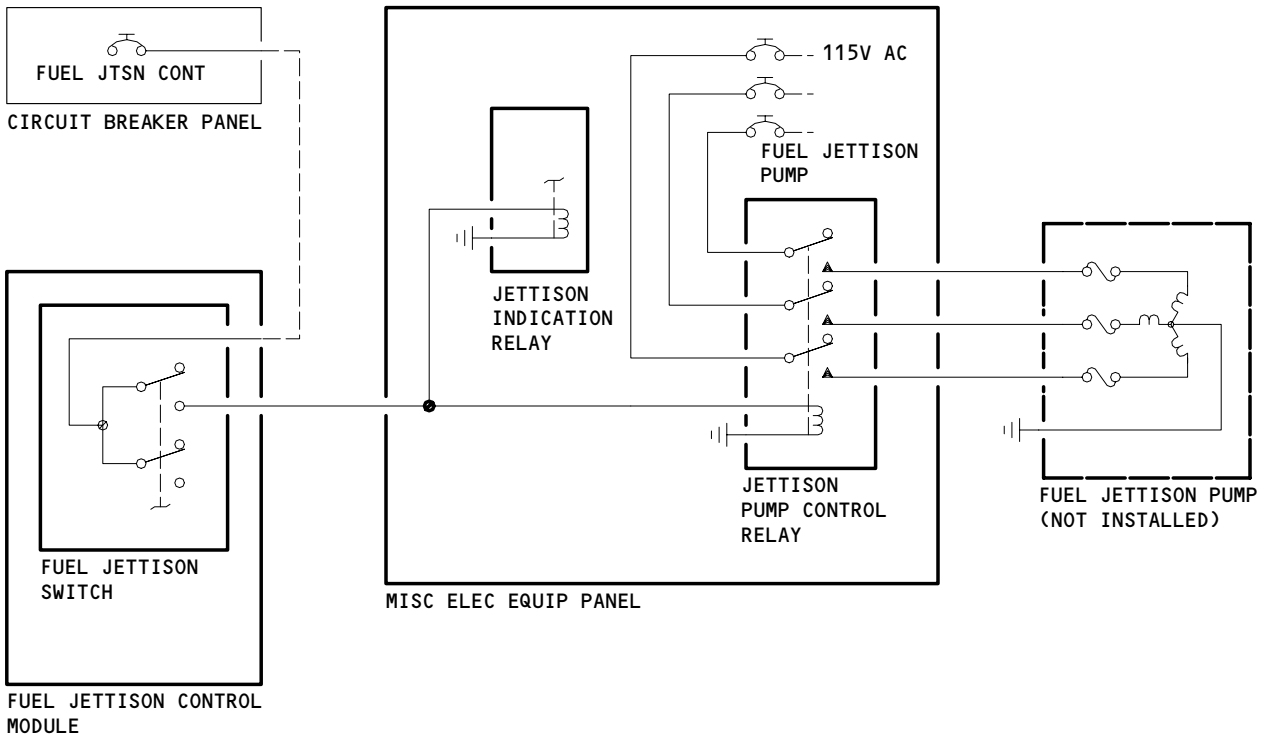

Fuel Jettison Pumps System Simplified Schematics
Figure 7A

BOEING PROPRIETARY - Copyright (C) - Unpublished Work - See title page for details.

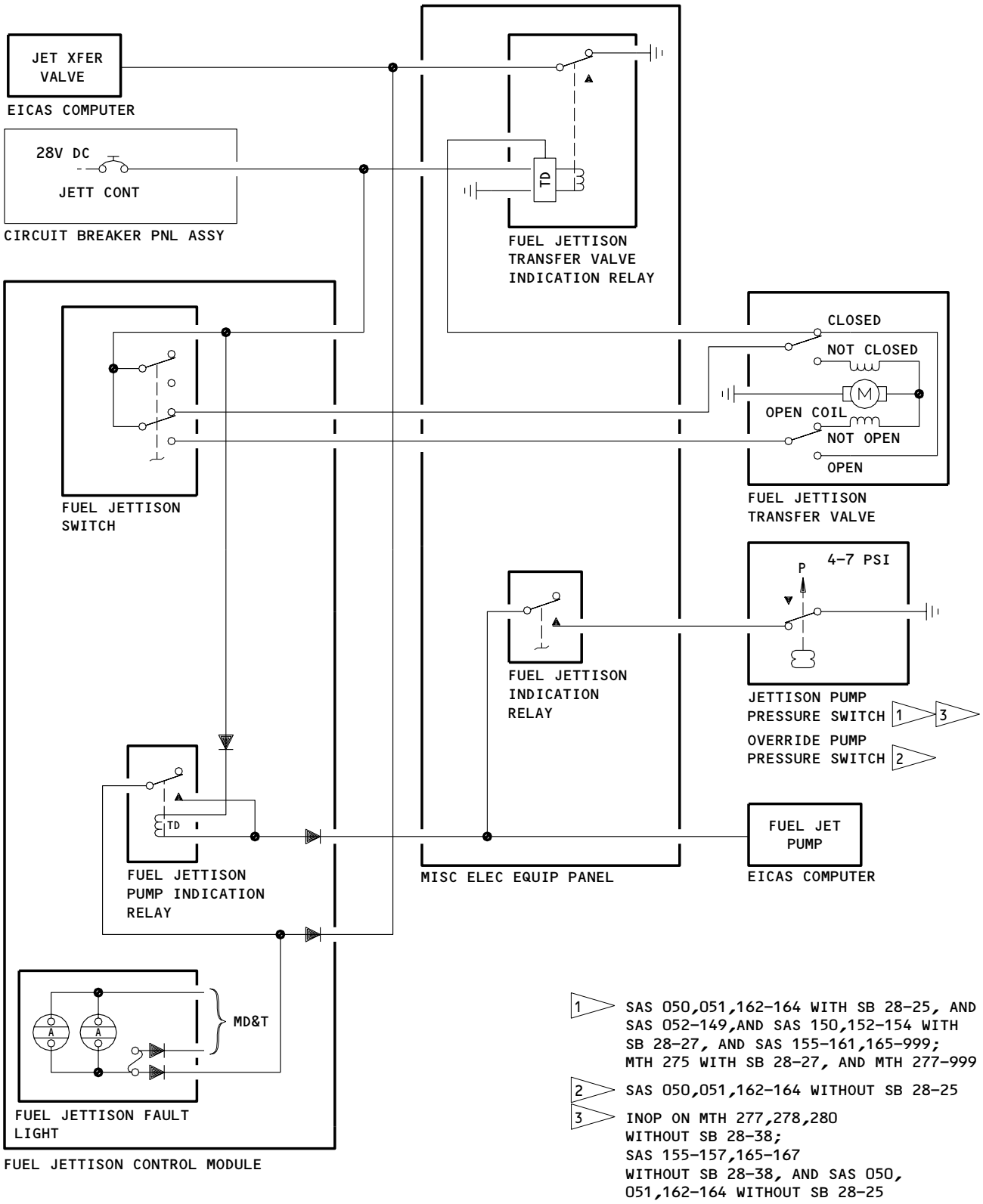

Fuel Jettison Transfer Valve Control System Simplified Schematic
Figure 8

BOEING PROPRIETARY - Copyright (C) - Unpublished Work - See title page for details.

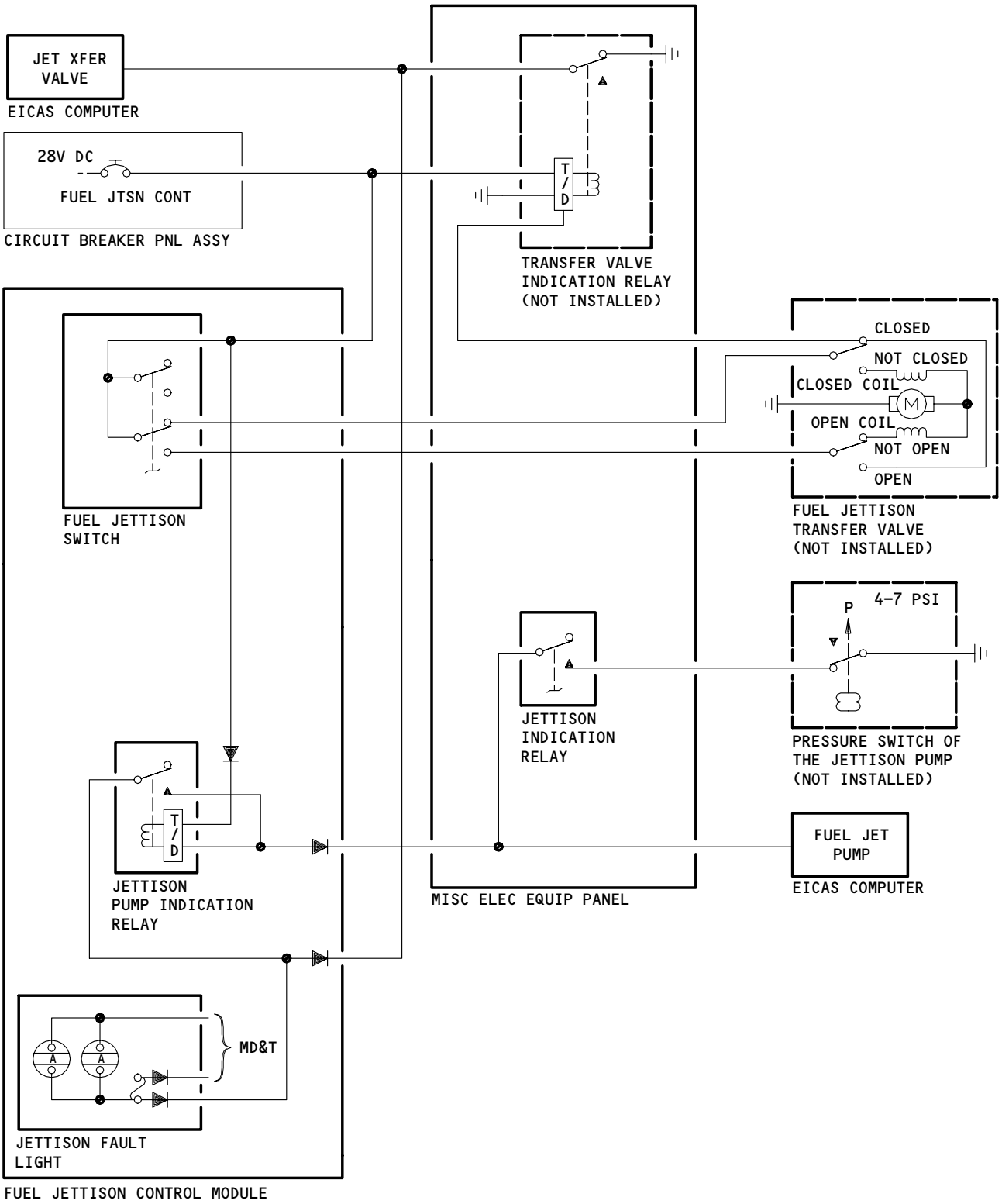

Fuel Jettison Transfer Valve Control System Simplified Schematic
Figure 8A

BOEING PROPRIETARY - Copyright (C) - Unpublished Work - See title page for details.

(e) A thermal relief valve.

(3) It is necessary to defuel the main fuel tank to get access to the nozzle valve.

(4) The adapter shaft has an adapter plate and a shaft with an universal joint.

(a) The two ends of the shaft have indexed splined joints to align with the valve and actuator.

(b) The adapter plate attaches to rear spar.

(c) An index plate attaches to the adapter plate with three screws through slotted holes in the index plate. The slotted hole lets the actuator be adjusted.

(5) It is necessary to defuel the main fuel tank to get access to the adapter shaft.

(6) The actuator has:

(a) A motor

(b) A gear train

(c) An electrical connector

(d) Open-close limit switches

(e) A position indicator

(f) A manual override handle.

(7) The actuator attaches to the wing rear spar out of the main fuel tanks.

(8) It is not necessary to defuel the main fuel tank to get access to the actuator.

5. Fuel Jettison Nozzle Valve Switch (Fig. 3)

A. The fuel jettison nozzle valve switch (referred to as "the nozzle valve switch") controls 28v dc power to the nozzle valve. The left and right nozzle valve switches are found on the fuel jettison control module on the overhead panel, P5.

B. If the position of the nozzle valve and the nozzle valve switch do not agree the amber VALVE light on the nozzle valve switch will come on.

6. SAS 150, 152-154 WITH SB 28-27, AND SAS 050-149, 155-999;
MTH 275 WITH SB 28-27, AND MTH 277-999;
Nozzle Valve Indication Relay (Fig. 6)

A. The nozzle valve indication relay is energized by 28v dc power from the nozzle valve switch and through the nozzle valve. The nozzle valve indication relay controls the nozzle valve EICAS messages and the nozzle valve indications.

B. The left nozzle valve indication relay is found in the left miscellaneous equipment panel in the main equipment center. The right nozzle valve indication relay is found in the right miscellaneous equipment panel in the main equipment center.

7. SAS 050, 051, 162-164 PRE-SB 28-25;
Fuel Jettison Pump (Fig. 7)

A. The two override pumps operate as the fuel jettison pumps. Each override pump delivers fuel from the auxiliary fuel tank to the fuel jettison manifold through the fuel jettison transfer valves during the fuel jettison operation. The override pumps usually deliver fuel to the engines (AMM 28-22-00/001, Engine Fuel Feed System).

BOEING PROPRIETARY - Copyright (C) - Unpublished Work - See title page for details.

8. SAS 150, 152-154 WITH SB 28-27, AND SAS 050, 051, 162-164 WITH SB 28-25, AND SAS 052-149, 155-161, 165-999;
MTH 275 WITH SB 28-27, AND MTH 277-999;
Override/Jettison Pumps (Fig. 7)
   A. Each housing of the override/jettison pump contains a jettison pump and an override pump. Each jettison pump and override pump move fuel from the auxiliary fuel tank to fuel jettison manifold through the fuel jettison transfer valves during the fuel jettison operation. The override pumps also deliver fuel to the engines (AMM 28-22-00/001, Engine Fuel Feed System).
9. Jettison Pump Control Relay (Fig. 7)
   A. SAS 050, 051, 162-164 PRE-SB 28-25;
      The jettison pump control relay lets three phase AC electrical power be supplied to the override pumps.
   B. SAS 150, 152-154 POST-SB 28-27;
      SAS 050, 051, 162-164 POST-SB 28-25;
      SAS 052-149, 155-161, 165-999;
      MTH 275 POST-SB 28-27;
      MTH 277-999;
      The jettison pump control relay lets three phase AC electrical power be supplied to the override/jettison pumps.
   C. The fuel jettison switch, found on the fuel jettison control module on the overhead panel, P5, controls the jettison pump control relay.
   D. The left jettison pump control relay is found in the left miscellaneous equipment panel in the main equipment center. The right jettison pump control relay is found in the right miscellaneous equipment panel in the main equipment center.
10. Pressure Switches of the Override/Jettison Pump (Fig. 8)
   A. SAS 050, 051, 162-164 PRE-SB 28-25;
      The two pressure switches of the override pumps monitor the fuel pressure from the override pumps (AMM 28-42-00/001).
   B. SAS 150, 152-154 POST-SB 28-27;
      SAS 050, 051, 162-164 POST-SB 28-25;
      SAS 052-149, 155-161, 165-999;
      MTH 275 POST-SB 28-27;
      MTH 277-999;
      The two pressure switches on each override/jettison pump monitor the fuel pressure from the jettison pump and override pump (AMM 28-42-00/001).
11. Jettison Pump Indication Relay
   A. The left and right jettison pump indication relays are on the fuel jettison control module on the overhead panel, P5.
12. Fuel Jettison Transfer Valve (Fig. 5)
   A. The two fuel jettison transfer valves (referred to as "the transfer valves") control the fuel flow from the override pumps to the fuel jettison manifold. A transfer valve is installed on the wing rear spar between ribs 1 and 2 in each wing.
   B. The transfer valve has three parts: the valve, the adapter shaft and the actuator.
      (1) The transfer valve is found in the auxiliary fuel tank, installed on a bracket that attaches to the wing rear spar.

BOEING PROPRIETARY - Copyright (C) - Unpublished Work - See title page for details.

(2) The transfer valve has these components:
  (a) A valve housing
  (b) A disc type valve that turns
  (c) Connections to the fuel jettison manifold
  (d) An adapter shaft with indexed splines and a universal joint.
  (e) A thermal relief valve.
(3) It is necessary to defuel the auxiliary fuel tank to get access to the tranfer valve.
(4) The adapter shaft has an adapter plate and a shaft with a universal joint.
  (a) The two ends of the shaft have indexed splined joints to align with the valve and actuator.
  (b) The adapter plate attaches to the wing rear spar.
  (c) An index plate attaches to the adapter plate with three screws through slotted holes in the index plate. The slotted holes lets the actuator be adjusted.
(5) It is necessary to defuel the auxiliary fuel tank to get access to the adapter shaft.
(6) The actuator has these components:
  (a) A motor
  (b) A gear train
  (c) An electrical connector
  (d) Open-close limit switches
  (e) A position indicator
  (f) A manual override handle.
(7) The actuator attaches to the wing rear spar outside of the auxiliary fuel tank.
(8) It is not necessary to defuel the auxiliary fuel tank to get access to the actuator.

13. <u>SAS 150, 152-154 WITH SB 28-27, AND SAS 050-149,155-999;</u>
<u>MTH 275 WITH SB 28-27, AND MTH 277-999;</u>
<u>Transfer Valve Indication Relay</u>

A. The transfer valve indication relay is energized by 28v dc power from the transfer valve. The transfer valve indication has a time delay. The transfer valve indication relay controls the EICAS messages and the indications for the transfer valve.

B. The left transfer valve indication relay is found in the left miscellaneous electrical equipment panel in the main equipment center. The right transfer valve indication relay is found in the right miscellaneous electrical equipment panel in the main equipment center.

BOEING PROPRIETARY - Copyright (C) - Unpublished Work - See title page for details.

14. Fuel Jettison Switch (Fig. 3)
    A. The fuel jettison switch controls 28v dc power to the transfer valve, the jettison indication relay, and the jettison pump control relay. The fuel jettison switch is found on the fuel jettison control module on the overhead panel, P5.
15. Fuel Jettison Control Module (Fig. 3)
    A. The fuel jettison control module is found on the overhead panel, P5. The fuel jettison control module contains the fuel jettison switch, jettison indication relay, the fuel jettison fault light, and the nozzle valve switches.
16. Jettison Indication Relay (Fig. 7, 8)
    A. The fuel jettison indication relay controls 28v dc power to the fuel jettison pump pressure switch. The left fuel jettison indication relay is found in the left miscellaneous electrical equipment panel in the main equipment center. The right fuel jettison indication relay is found in the right miscellaneous electrical equipment panel in the main equipment panel.
17. SAS 150, 152-154 WITH SB 28-27, AND SAS 050-149, 155-161, 166-999;
    MTH 275 WITH SB 28-27, AND MTH 277-999;
    Operation
    A. To operate the fuel jettison system 28v dc power must be available on the airplane. All applicable circuit breakers must be closed and electrical power must be available to all fuel jettison components.
    B. The fuel jettison system is operative when the fuel jettison switch on the fuel jettison control module is turned to the ON position.
        (1) The fuel jettison transfer valve(s) in the auxiliary fuel tank open.
        (2) SAS 051 POST-SB 28-30;
            SAS 155-157, 165-167 PRE-SB 28-38;
            SAS 050, 162-164 PRE-SB 28-25;
            MTH 277, 278, 280 PRE-SB 28-38;
            MTH 279;
            The override pump(s) come on.
        (3) SAS 150, 152-154 POST-SB 28-27;
            SAS 050, 051, 162-164 POST-SB 28-25;
            SAS 155-157, 165-167 POST-SB 28-38;
            SAS 052-149, 155-161, 166-999;
            MTH 275 POST-SB 28-27;
            MTH 277, 278, 280 POST-SB 28-38;
            MTH 281-999;
            The override/jettison pump(s) come on.
        (4) SAS 051 POST-SB 28-30 AND PRE-SB 28-25;
            SAS 050, 162-164 PRE-SB 28-25;
            SAS 155-157, 165-167 PRE-SB 28-38;
            MTH 277, 278, 280 PRE-SB 28-38;
            MTH 279;
            If the fuel jettison transfer valves or the override pumps do not agree with the fuel jettison switch position, the fuel jettison fault light will come on.

BOEING PROPRIETARY - Copyright (C) - Unpublished Work - See title page for details.

(5) SAS 150, 152-154 POST-SB 28-27;
SAS 050, 051, 162-164 POST-SB 28-25;
SAS 155-157, 165-167 POST-SB 28-38;
SAS 052-149, 155-161, 166-999;
MTH 275 POST-SB 28-27;
MTH 277, 278, 280 POST-SB 28-38;
MTH 281-999;
If the fuel jettison transfer valves or the override/jettison pumps do not agree with the jettison switch position, the fuel jettison fault light will come on.

C. When the left or right fuel jettison nozzle valve switch on the fuel jettison control module is pushed to the ON position, the fuel jettison operation starts.
(1) The fuel jettison nozzle valve(s) open.

D. To stop the fuel jettison operation, turn the fuel jettison switch on the fuel jettison control module to the OFF position or put the left and right fuel jettison nozzle valve switches on the fuel jettison control module to the OFF position.

E. When all the fuel in the auxiliary fuel tank is jettisoned or the fuel jettison operation is stopped:
(1) The fuel jettison nozzle valves close.
(2) The fuel jettison transfer valves close.
(3) SAS 051 POST-SB 28-30 AND PRE-SB 28-25;
SAS 155-157, 165-167 PRE-SB 28-38;
SAS 050, 162-164 PRE-SB 28-25;
MTH 277, 278, 280 PRE-SB 28-38;
MTH 279;
The override pumps go off.
(4) SAS 150, 152-154 POST-SB 28-27;
SAS 050, 051, 162-164 POST-SB 28-25;
SAS 155-157, 165-167 POST-SB 28-38;
SAS 052-149, 155-161, 166-999;
MTH 275 POST-SB 28-27;
MTH 277, 278, 280 POST-SB 28-38;
MTH 281-999;
The override/jettison pumps go off.

BOEING PROPRIETARY - Copyright (C) - Unpublished Work - See title page for details.

FUEL JETTISON SYSTEM

COMPONENT	FIG. 102 SHT	QTY	ACCESS/AREA	AMM REFERENCE
ACTUATOR - L FUEL JETTISON NOZZLE VALVE, V157 [1]	3	1	L REAR SPAR OF WING	28-31-05
ACTUATOR - L FUEL JETTISON TRANSFER VALVE, V159 [1]	3	1	L REAR SPAR OF WING	28-31-04
ACTUATOR - R FUEL JETTISON NOZZLE VALVE, V158 [1]	3	1	R REAR SPAR OF WING	28-31-05
ACTUATOR - R FUEL JETTISON TRANSFER VALVE, V160 [1]	3	1	R REAR SPAR OF WING	28-31-04
ADAPTER SHAFT - L FUEL JETTISON NOZZLE VALVE, V157 [1]	3	1	541UB, LEFT WING MAIN FUEL TANK	28-31-03
ADAPTER SHAFT - L FUEL JETTISON TRANSFER VALVE, V159 [1]	3	1	531BB, LEFT WING CENTER AUXILIARY FUEL TANK	28-31-06
ADAPTER SHAFT - R FUEL JETTISON NOZZLE VALVE, V158 [1]	3	1	641UB, RIGHT WING MAIN FUEL TANK	28-31-03
ADAPTER SHAFT - R FUEL JETTISON NOZZLE VALVE, V160 [1]	3	1	631BB, RIGHT WING CENTER AUXILIARY FUEL TANK	28-31-06
CIRCUIT BREAKER -			FLT COMPT, P6	
L FUEL OVRD PUMP, C369		1	6F15	*
R FUEL OVRD PUMP, C370		1	6F21	*
CIRCUIT BREAKER -			FLT COMPT, P11	
LEFT JETT CONT, C1065 [4]		1	11M13	*
LEFT JETT NOZZLE VALVE, C1067 [4]		1	11M14	*
RIGHT JETT CONT, C1066 [4]		1	11M22	*
RIGHT JETT NOZZLE VALVE, C1068 [4]		1	11M23	*
CIRCUIT BREAKER -			L MISC ELEC EQUIP PANEL, P36	
L FUEL JETT PUMP, C375 [2] [5]			36F4 OR 36G7	*
CIRCUIT BREAKER -			R MISC ELEC EQUIP PANEL, P37	
R FUEL JETT PUMP, C376 [2] [5]			37F4 OR 37G4	*
COMPUTER - (FIM 31-41-00/101)				
EICAS L, M10181				
EICAS R, M10182				
DIODE -				
JETTISON L BLOCKING, TB302		1	L MISC ELEC EQUIP PANEL, P36	
JETTISON R BLOCKING, TB304		1	R MISC ELEC EQUIP PANEL, P37	
LIGHT - FUEL JETTISON FAULT, L1	1	1	FUEL JETTISON CONTROL MODULE, M1733	
MANIFOLD - FUEL JETTISON	1,2	2	LEFT MAIN TANK, RIGHT MAIN TANK	
MODULE - FUEL JETTISON CONTROL, M1733 [4]		1	FLT COMPT, P5	

* SEE THE WDM EQUIPMENT LIST

[1] SAS 050-149;
SAS 150, 152-154 POST-SB 28-27;
SAS 155-999;
MTH 275 POST-SB 28-27;
MTH 277-999

[2] SAS 050, 051, 162-164 POST-SB 28-25;
SAS 052-149;
SAS 150, 152-154 POST-SB 28-27;
SAS 155-161, 165-999;
MTH 275 POST-SB 28-27;
MTH 277-999

[3] SAS 051 POST-SB 28-30;
SAS 050, 052-149;
SAS 150, 152-154 POST-SB 28-27;
SAS 155-999;
MTH 275 POST-SB 28-27;
MTH 277-999

[4] "INOP" MTH 276

[5] "INOP" ON SAS 155-157, 165-167 PRE-SB 28-38;
SAS 050, 051, 162-164 PRE-SB 28-25;
MTH 277, 278, 280 PRE-SB 28-38;
MTH 279

Fuel Jettison System - Component Index
Figure 101 (Sheet 1)

BOEING PROPRIETARY - Copyright (C) - Unpublished Work - See title page for details.

COMPONENT	FIG. 102 SHT	QTY	ACCESS/AREA	REFERENCE
PUMP - L JETTISON, M1730 [2]		1	531AB, LEFT AUXILIARY FUEL TANK	28-31-01
PUMP - R JETTISON, M1731 [2]		1	631AB, RIGHT AUXILIARY FUEL TANK	28-31-01
RELAY - L JETTISON PUMP IND, K2 [3]		1	FUEL JETTISON CONTROL MODULE, M1733	*
RELAY - R JETTISON PUMP IND, K1		1	FUEL JETTISON CONTROL MODULE, M1733	*
RELAY - (REF 31-01-36, FIG. 101)				
L JETTISON IND, K2089				
L JETTISON PUMP CONTROL, K2093				
L NOZZLE VALVE INDICATION, K2095 [3]				
L TRANSFER VALVE INDICATION, K2097 [3]				
RELAY - (REF 31-01-37, FIG. 101)				
R JETTISON IND, K2090				
R JETTISON PUMP CONTROL, K2094				
R NOZZLE VALVE INDICATION, K2096 [3]				
R TRANSFER VALVE INDICATION, K2098 [3]				
SWITCH - FUEL JETTISON, S3	4	1	FUEL JETTISON CONTROL MODULE, M1733	
SWITCH - L NOZZLE VALVE, S1	4	1	FUEL JETTISON CONTROL MODULE, M1733	
SWITCH - R NOZZLE VALVE, S2	4	1	FUEL JETTISON CONTROL MODULE, M1733	
VALVE - L FUEL JETTISON NOZZLE, V157 [1]	3	1	541UB, LEFT MAIN FUEL TANK	28-31-03
VALVE - L FUEL JETTISON TRANSFER, V159 [1]	3	1	531BB, LEFT AUXILIARY FUEL TANK	28-31-06
VALVE - R FUEL JETTISON NOZZLE, V158 [1]	3	1	641UB, RIGHT MAIN FUEL TANK	28-31-03
VALVE - R FUEL JETTISON TRANSFER, V160 [1]	3	1	631BB, RIGHT AUXILIARY FUEL TANK	28-31-06

* SEE THE WDM EQUIPMENT LIST

Fuel Jettison System - Component Index
Figure 101 (Sheet 2)

BOEING PROPRIETARY - Copyright (C) - Unpublished Work - See title page for details.

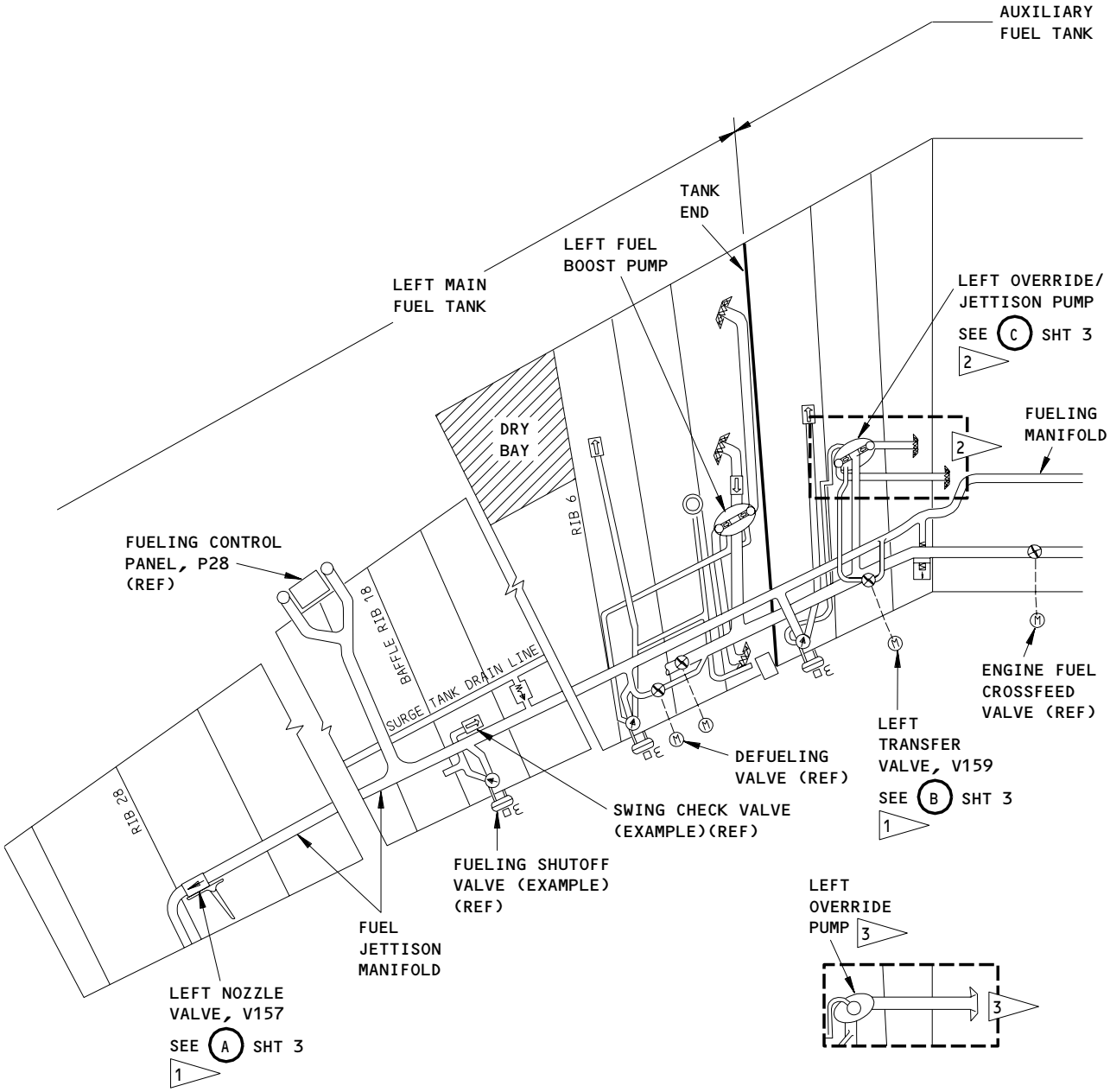

LEFT WING

1 SAS 050-149, AND SAS 150,152-154 WITH WITH SB 28-27, AND 155-999;
MTH 275 WITH SB 28-27, AND MTH 277-999

2 SAS 050,051,162-164 WITH SB 28-25, AND
SAS 052-149, AND SAS 150,152-154 WITH SB 28-27,
AND SAS 155-161,165-999;
MTH 275 WITH SB 28-27, AND MTH 277-999

3 SAS 050,051,162-164 WITHOUT SB 28-25;
MTH 276

Fuel Jettison System - Component Location
Figure 102 (Sheet 1)

BOEING PROPRIETARY - Copyright (C) - Unpublished Work - See title page for details.

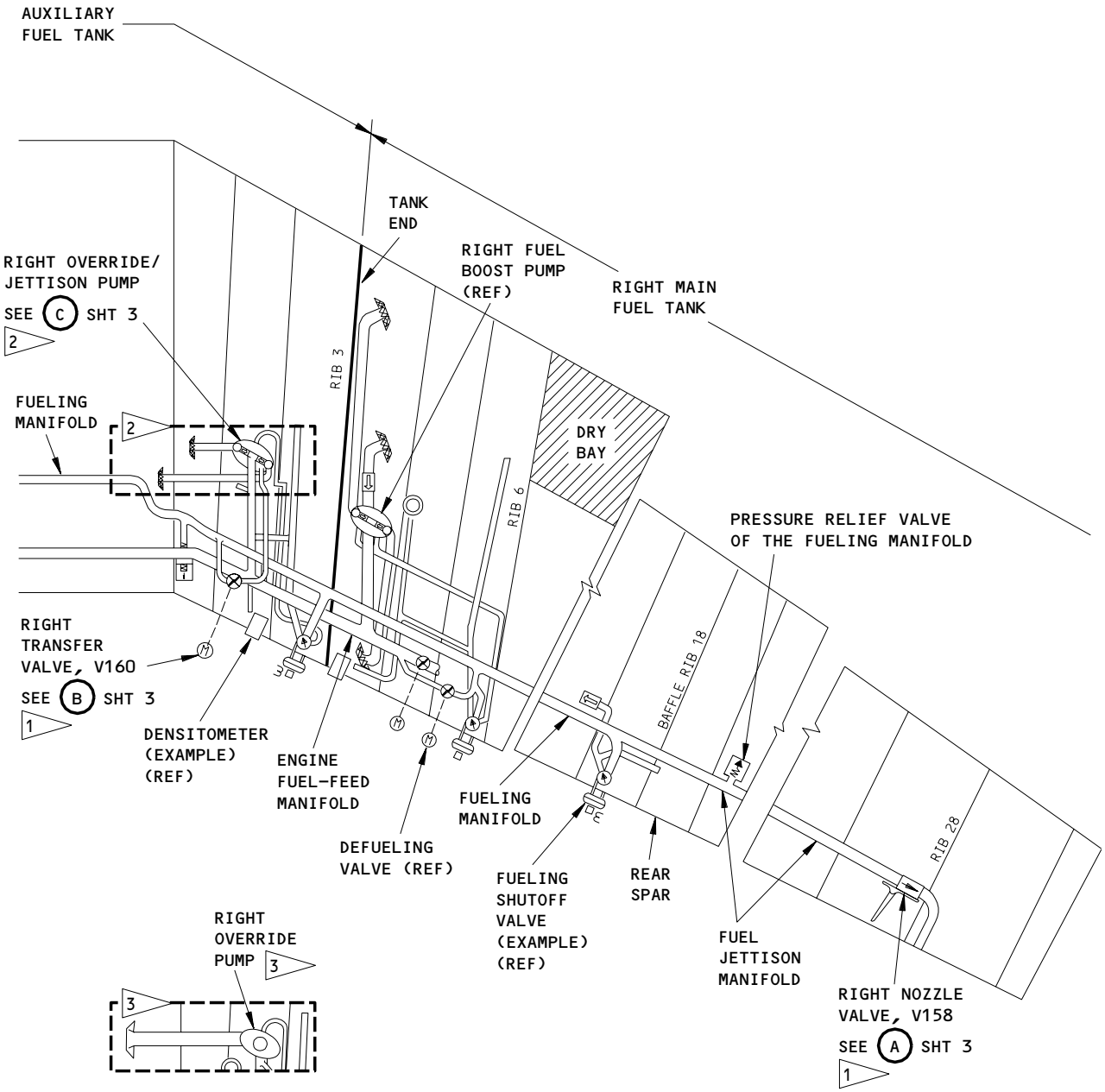

RIGHT WING

1 SAS 050-149, AND SAS 150,152-154 WITH WITH SB 28-27, AND 155-999;
MTH 275 WITH SB 28-27, AND MTH 277-999

2 SAS 050,051,162-164 WITH SB 28-25, AND
SAS 052-149, AND SAS 150,152-154 WITH SB 28-27,
AND SAS 155-161,165-999;
MTH 275 WITH SB 28-27, AND MTH 277-999

3 SAS 050,051,162-164 WITHOUT SB 28-25;
MTH 276

Fuel Jettison System - Component Location
Figure 102 (Sheet 2)

BOEING PROPRIETARY - Copyright (C) - Unpublished Work - See title page for details.

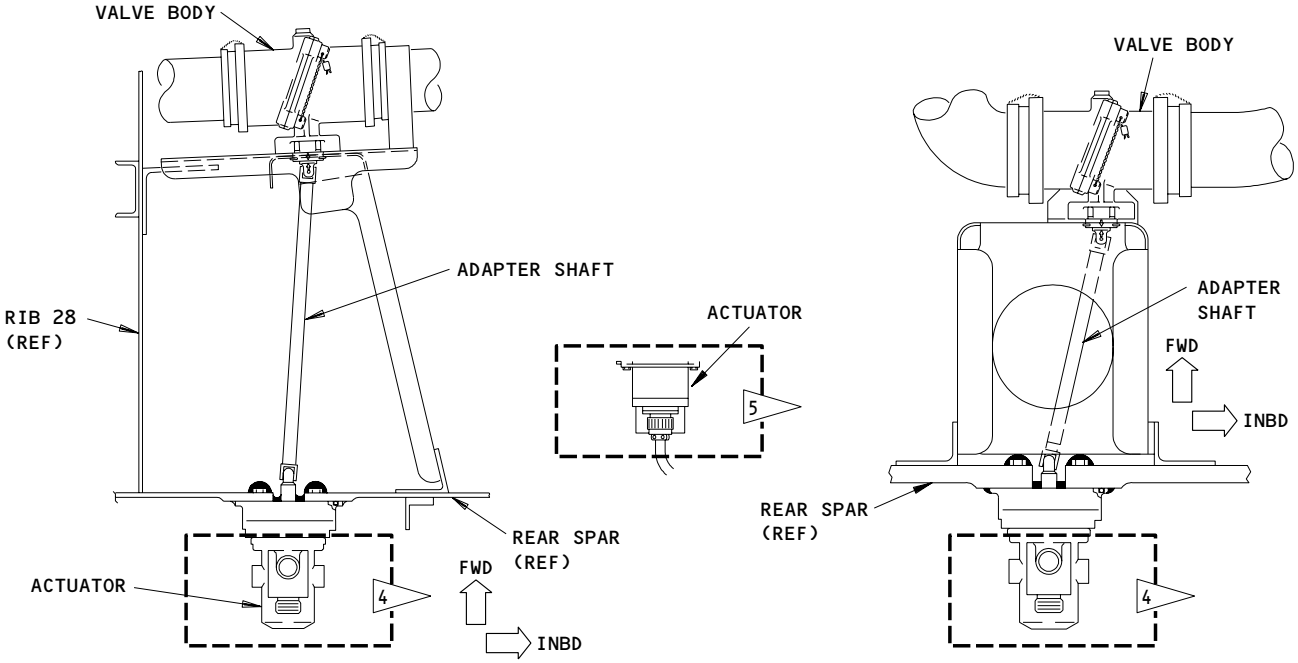

LEFT OR RIGHT NOZZLE VALVE,
V157 OR V158

A

LEFT OR RIGHT TRANSFER VALVE,
V159 OR V160

B

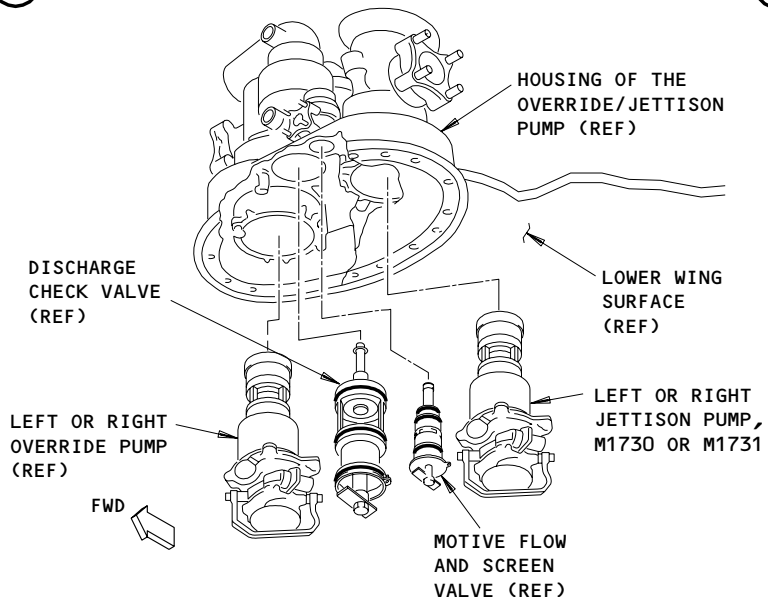

LEFT OR RIGHT OVERRIDE/JETTISON PUMP

C 1

4 SAS 050,051,155,156,162-166

5 SAS 052-149 AND SAS 150,152-154 WITH
SB 28-27, AND SAS 157-161,167-999;
MTH 275 WTH SB 28-27, AND MTH 277-999

Fuel Jettison System - Component Location (Details from Shts 1 and 2)
Figure 102 (Sheet 3)

BOEING PROPRIETARY - Copyright (C) - Unpublished Work - See title page for details.

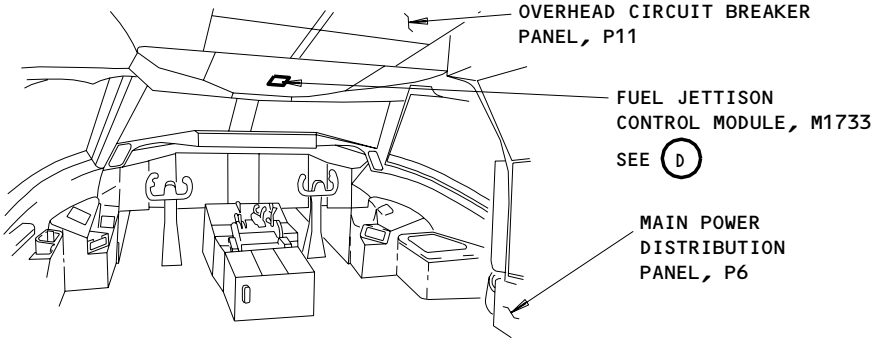

FLIGHT COMPARTMENT

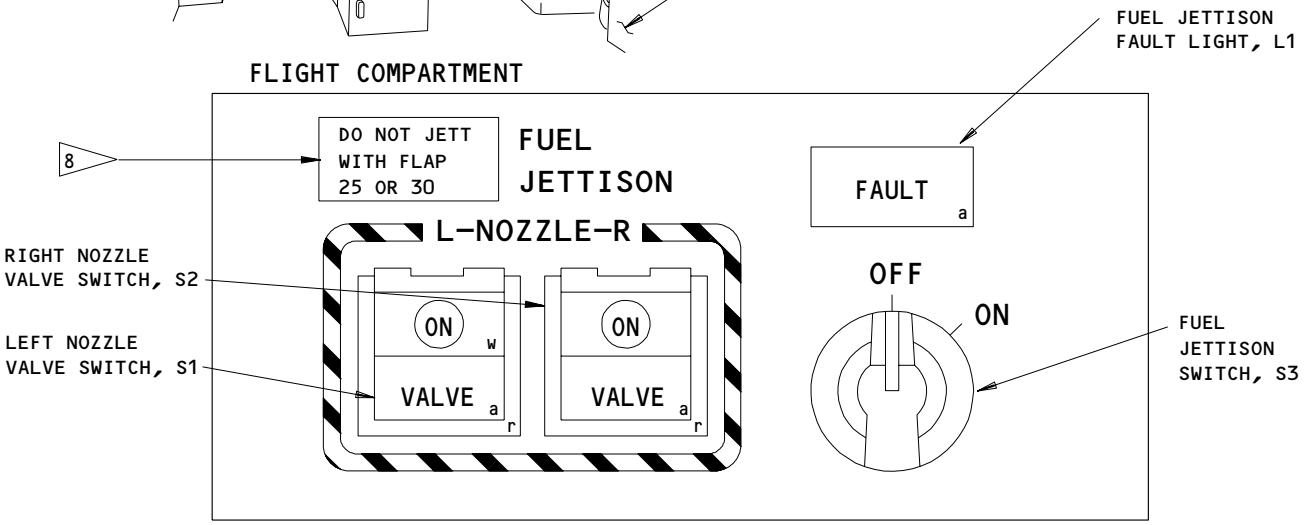

FUEL JETTISON CONTROL MODULE, M1733

D 6

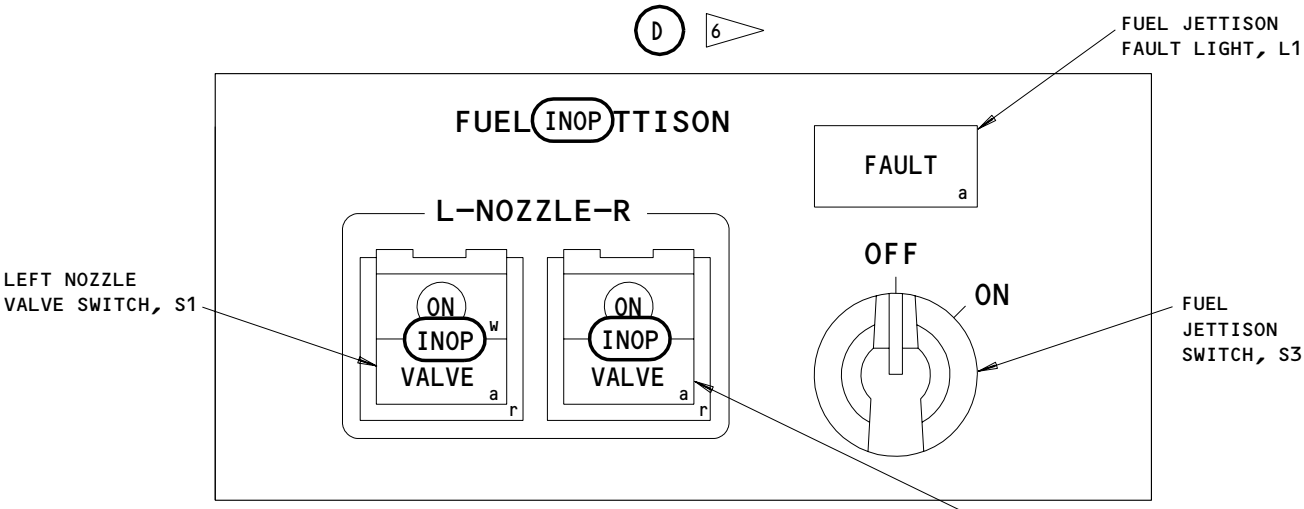

FUEL JETTISON CONTROL MODULE, M1733

D 7

6 SAS 050-149 AND SAS 150,152-154 WITH SB 28-27, AND 155-999; MTH 275 WITH SB 28-27, AND MTH 277-999

7 MTH 276

8 SAS 155-157,165-167 WITHOUT SB 28-38; SAS 050,051,162-164 WITHOUT SB 28-25; MTH 277,278,280 WITHOUT SB 28-38, AND MTH 279

Fuel Jettison System - Component Location
Figure 102 (Sheet 4)

BOEING PROPRIETARY - Copyright (C) - Unpublished Work - See title page for details.

FUEL JETTISON SYSTEM - ADJUSTMENT/TEST

TASK 28-31-00-715-001-001

1. Operational Test - Fuel Jettison System
   A. General
      (1) This procedure gives instructions to do a test of the subsequent fuel jettison system components:
         (a) Transfer valves
         (b) Nozzle valves
         (c) Pressure switches of the jettison system
         (d) Override/jettison pumps.
      (2) It is not necessary to do all of these procedures to test one component. To test one component, do the test preparation procedure, the applicable test for that component, and the procedure to put the airplane back to its usual condition. For example, to do a test of the left override/jettison pump, do these procedures:
         (a) Prepare to do a Test
         (b) Test of the Left Override/Jettison Pump
         (c) Put the Airplane Back to Its Usual Condition
      (3) The override/jettison pumps cannot be operated with less than 1000 pounds (453 kilograms) per AD 97-19-15. This restriction applies to airplanes that have one or more override/jettison pumps that have inlet diffusers attached by screws (P/N S343T002-5, -8, -12, -15). SB 28-52 and SB-62 replace these pumps with pumps that either have no diffusers or have a cast-in inlet diffuser. When all the pumps are replaced with new or modified pumps (P/N S343T002-23 or higher dash number) there is no minimum fuel restriction. Do not use JP4 or JET-B fuel after the new or modified override pump is installed.
   B. References
      (1) AMM 06-44-00/201, Wing Access Doors and Panels
      (2) AMM 12-11-01/301, Fuel Tank Pressure Fueling
      (3) AMM 24-22-00/201, Electrical Power - Control
      (4) AMM 27-51-00/201, Trailing Edge Flap System
      (5) AMM 27-61-00/201, Spoiler/Speedbrake Control System
      (6) AMM 28-26-00/201, Defueling
      (7) AMM 32-00-15/201, Landing Gear Door Locks
      (8) AMM 32-00-20/201, Landing Gear Downlocks
      (9) AMM 32-09-02/201, Air/Ground Relays
   C. Access
      (1) Location Zones
         531 Center Auxilary Tank (Left)
         541 Main Tank - Outboard of Rib No. 10 (Left)
         631 Center Auxiliary Tank (Right)
         641 Main Tank - Outboard of Rib No. 10 (Right)

BOEING PROPRIETARY - Copyright (C) - Unpublished Work - See title page for details.

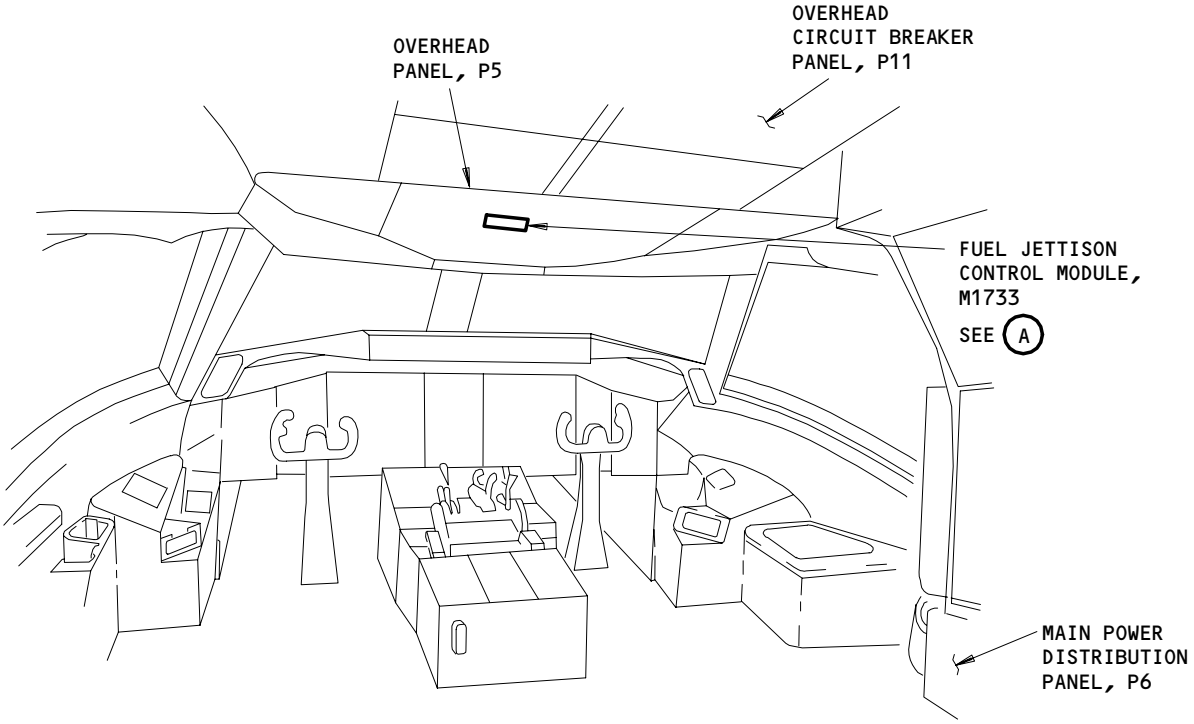

FLIGHT COMPARTMENT

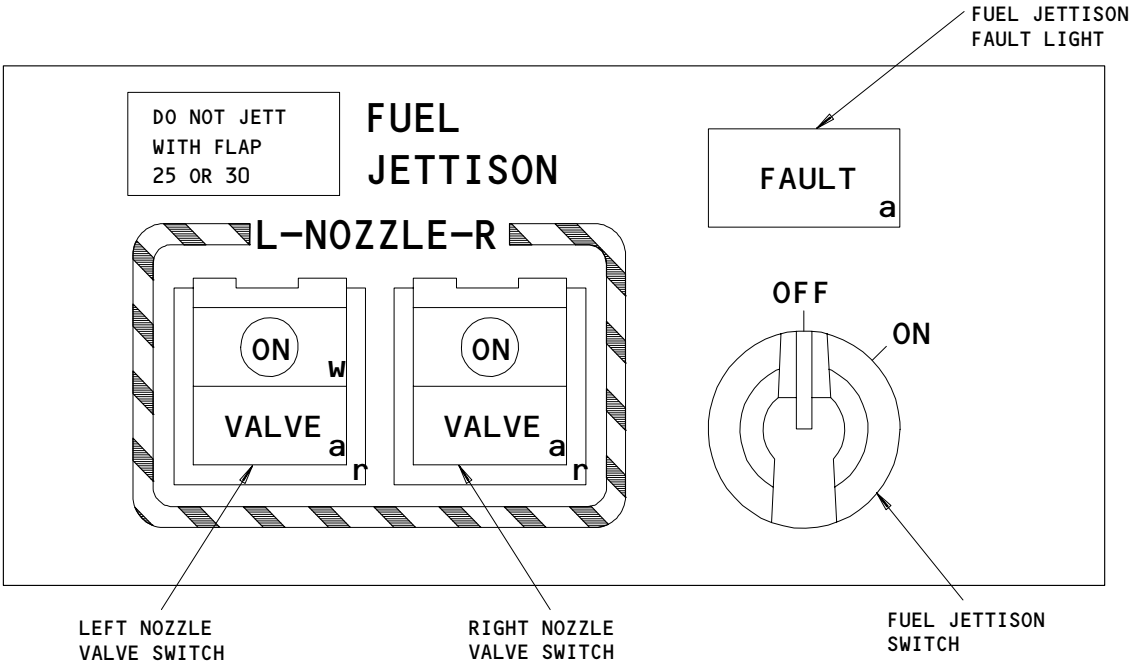

FUEL JETTISON CONTROL MODULE, M1733

A

Fuel Jettison Control Module
Figure 501

BOEING PROPRIETARY - Copyright (C) - Unpublished Work - See title page for details.

(2) Access Panels

531AB	Access Cover (Left)
561UBX	Wing Access Panel (Left)
631AB	Access Cover (Right)
661UBX	Wing Access Panel (Right)

D. Prepare to Do a Test

S 865-002-001
(1) Supply electrical power to the airplane (AMM 24-22-00/201).

S 655-004-001
(2) Refuel the airplane if it is necessary (AMM 12-11-01/301).

NOTE: The minimum fuel quantity necessary to make sure all of the override/jettison pumps are correctly primed is 21700 lbs (9900 kgs) in the auxiliary fuel tank.

You can refuel the auxiliary fuel tank by pressure fueling (AMM 12-11-01/301) or by tank to tank transfer (AMM 28-26-00/201).

S 215-005-001
(3) Make sure the fuel jettison switch on the overhead panel, P5, is in the OFF position.

S 215-006-001
(4) Make sure the six EICAS circuit breakers are closed.

S 865-007-001

WARNING: DO THE DEACTIVATION PROCEDURE FOR THE TRAILING EDGE FLAPS. ACCIDENTAL OPERATION OF THE TRAILING EDGE FLAPS COULD CAUSE INJURY TO PERSONS.

(5) Do the deactivation procedure for the trailing edge flaps (AMM 27-51-00/201).

S 215-008-001
(6) Make sure the downlocks are installed on the nose and main landing gear (AMM 32-00-20/201).

S 495-009-001

WARNING: USE THE PROCEDURE IN AMM 32-00-15/201 TO INSTALL THE DOOR LOCKS. THE DOORS OPEN AND CLOSE QUICKLY AND CAN CAUSE INJURY TO PERSONS OR DAMAGE TO EQUIPMENT.

(7) Open the doors for the landing gear and install the door locks (AMM 32-00-15/201).

BOEING PROPRIETARY - Copyright (C) - Unpublished Work - See title page for details.

S 865-010-001

WARNING: MAKE SURE THE SPOILERS ARE FULLY RETRACTED DURING THE FUEL JETTISON TEST. IF THE SPOILERS ARE NOT FULLY RETRACTED, THE SPOILERS CAN RETRACT SUDDENLY AND CAUSE INJURY TO PERSONS AND DAMAGE TO EQUIPMENT.

(8) Make sure all of the spoilers are in their full down positions (fully retracted) (AMM 27-61-00/201).

NOTE: Operation of the fuel jettison transfer valve can cause the air/ground system to go into air mode momentarily. This causes the spoilers to retract suddenly if they are in the up position.

(a) The speedbrake lever must be in its down-and-locked detent position.
(b) Attach a DO-NOT-OPERATE tag to the speedbrake lever.

S 865-263-001
(9) Open these circuit breakers and attach DO-NOT-CLOSE tags:
(a) On the main power distribution panel, P6:
1) 6F15, L FUEL OVRD PUMP
2) 6F21, R FUEL OVRD PUMP
(b) On the overhead circuit breaker panel, P11:
1) 11M13, LEFT JETT CONT
2) 11M22, RIGHT JETT CONT
3) 11M14, LEFT JETT NOZZLE VALVE
4) 11M15, FUEL PUMPS L
5) 11M23, RIGHT JETT NOZZLE VALVE
6) 11M24, FUEL PUMPS R

E. Test of the Transfer Valves

S 865-011-001
(1) Close these circuit breakers and remove the DO-NOT-CLOSE tags:
(a) On the overhead circuit breaker panel, P11:
1) 11M13, LEFT JETT CONT
2) 11M22, RIGHT JETT CONT

S 015-012-001
(2) Get access to the transfer valves through the wheel wells of the main landing gear.

S 035-013-001
(3) Disconnect the electrical connector from the actuator for the right transfer valve.
(a) Make sure the fuel jettison FAULT light comes on after 10 seconds.

BOEING PROPRIETARY - Copyright (C) - Unpublished Work - See title page for details.

(b) Make sure the EICAS message, R JET XFR VALVE, shows on the top display after 10 seconds.

S 865-024-001
(4) Turn the fuel jettison switch on the overhead panel, P5, to the ON position.

NOTE: When you set the fuel jettison switch to ON (in ground mode) it causes the two AFT equipment fans to stop operation. The fans will start again when you set the fuel jettison switch to OFF (AMM 21-58-00/501). If the cooling fans do not operate as expected, refer to FIM 28-31-00, Fig. 107.

S 215-274-001
(5) Make sure the manual override handle on the actuator of the left transfer valve moves to the OPEN position.

S 215-288-001
(6) Make sure the IECAS message L JET XFR VALVE, does not hsow on the top display.

S 865-028-001
(7) Turn the fuel jettison switch to the OFF position.

S 435-026-001
(8) Connect the electrical connector to the actuator of the right transfer valve.

S 215-027-001
(9) Do these checks:
(a) Make sure the fuel jettison FAULT light goes off.
(b) Make sure the EICAS message, R JET XFR VALVE, does not show on the top display.

S 035-029-001
(10) Disconnect the electrical connector from the actuator of the left transfer valve.
(a) Make sure the EICAS message, L JET XFR VALVE, shows on the top display after 10 seconds.
(b) Make sure the fuel jettison FAULT light comes on after 10 seconds.

S 865-030-001
(11) Turn the fuel jettison switch to the ON position.

S 215-275-001
(12) Make sure the manual override handle on the actuator of the right transfer valve moves to the OPEN position.

BOEING PROPRIETARY - Copyright (C) - Unpublished Work - See title page for details.

S 215-289-001
(13) Make sure the EICAS message R JET XFR VALVE, does not show on the top display.

S 865-034-001
(14) Turn the fuel jettison switch to the OFF position.

S 435-032-001
(15) Connect the electrical connector to the actuator of the left transfer valve.

S 215-033-001
(16) Do these checks:
(a) Make sure the fuel jettison FAULT light goes off.
(b) Make sure the EICAS message, L JET XFR VALVE, does not show on the top display.

S 865-035-001
(17) Turn the fuel jettison switch to the ON position.

S 215-036-001
(18) Do these checks:
(a) Make sure the fuel jettison FAULT light does not come on.
(b) Make sure the EICAS messages, L JET XFER VALVE and R JET XFER VALVE, do not show on the top display.

S 865-037-001
(19) Turn the fuel jettison switch to the OFF position.

S 865-264-001
(20) Open these circuit breakers and attach DO-NOT-CLOSE tags:
(a) On the overhead circuit breaker panel, P11:
1) 11M13, LEFT JETT CONT
2) 11M22, RIGHT JETT CONT

F. Test of the Left Nozzle Valve in the Flight Mode

S 215-265-001
(1) Make sure these circuit breakers are open:
(a) On the overhead circuit breaker panel, P11:
1) 11M13, LEFT JETT CONT
2) 11M22, RIGHT JETT CONT
(b) On the main power distribution panel, P6:
1) 6F15, L FUEL OVRD PUMP
2) 6F21, R FUEL OVRD PUMP

BOEING PROPRIETARY - Copyright (C) - Unpublished Work - See title page for details.

S 865-048-001

WARNING: DO THE DEACTIVATION PROCEDURE FOR THE SPOILERS OR MOVE ALL PERSONS AND EQUIPMENT AWAY FROM THE SPOILERS. THE SPOILERS CAN RETRACT QUICKLY AND CAUSE INJURY TO PERSONS OR DAMAGE TO EQUIPMENT.

(2) Do the deactivation procedure for the spoilers (AMM 27-61-00/201) or move all persons and equipment away from the spoilers.

S 865-049-001

WARNING: MAKE SURE YOU DO THE FLIGHT MODE SIMULATION CORRECTLY. IF THE PROCEDURE IS NOT DONE CORRECTLY, INJURY TO PERSONS OR DAMAGE TO EQUIPMENT CAN OCCUR.

(3) Do the Flight Mode Simulation procedure for the No. 1 air/ground system (AMM 32-09-02/201).

S 865-050-001

(4) Close these circuit breakers:
   (a) On the overhead circuit breaker panel, P11:
      1) 11M14, L JETT NOZZ VALVE
      2) 11M23, R JETT NOZZ VALVE

S 865-267-001

WARNING: MAKE SURE NO PERSONS OR GROUND EQUIPMENT ARE BELOW OR NEAR THE WINGTIPS. FUEL CAN SPILL FROM THE JETTISON NOZZLE OUTLETS AND CAUSE INJURIES TO PERSONS AND DAMAGE TO EQUIPMENT.

CAUTION: MAKE SURE THE REFUEL/JETTISON MANIFOLD IS NOT PRESSURIZED BEFORE YOU OPEN THE JETTISON NOZZLE VALVE. THE FUEL IN THE MANIFOLD CAN BE PRESSURIZED 30 MINUTES AFTER REFUELING, DEFUELING, FUEL JETTISON OR FUEL TRANSFER OPERATIONS. IF THE JETTISON NOZZLE VALVES ARE OPENED, A FUEL SPILL FROM THE JETTISON NOZZLE OUTLETS CAN OCCUR.

(5) Do these steps to remove the pressure from the refuel/jettison manifold:
   (a) On the fueling control panel P28, set the switch for the center auxiliary fueling shutoff valve to the ON position.
   (b) If the fueling manifold is pressurized, make sure the blue fueling valve OPEN lights come on and then go off.
   (c) Wait ten minutes to remove the pressure in the manifold.

BOEING PROPRIETARY - Copyright (C) - Unpublished Work - See title page for details.

(d) Set the switch for the auxiliary tank fueling shutoff valve to the CLOSED position

S 865-051-001
(6) Push the L NOZZLE switch-light on the fuel jettison control module to the ON position.

S 215-052-001
(7) Do these checks:
(a) Make sure the ON flowbar comes on.
(b) Get access to the left nozzle valve on the rear spar of the left wing, inboard of the outboard aileron.
1) Remove the access panel, 561UBX (AMM 06-44-00/201).
(c) Make sure the manual override handle on the actuator of the left nozzle valve moves to the OPEN position.
(d) Make sure the L NOZZLE VALVE light comes on while the left nozzle valve moves to the open position.

S 865-053-001
(8) Push the L NOZZLE switch-light to the off position.

S 215-054-001
(9) Do these checks:
(a) Make sure the ON flowbar goes off.
(b) Make sure the manual override handle on the actuator of the left nozzle valve moves to the CLOSED position.
(c) Make sure the L NOZZLE VALVE light comes on while the left nozzle valve moves to the closed position.

S 035-055-001
(10) Disconnect the electrical connector on the actuator of the left nozzle valve.

S 215-057-001
(11) After ten seconds, do the checks that follow:
(a) Make sure the L NOZZLE VALVE light comes on and stays on.
(b) Make sure the EICAS message, FUEL JET NOZ, shows on the top display.

BOEING PROPRIETARY - Copyright (C) - Unpublished Work - See title page for details.

S 435-059-001
(12) Connect the electrical connector to the actuator of the left nozzle valve.

S 215-060-001
(13) Do these checks:
(a) Make sure the L NOZZLE VALVE light goes off.
(b) Make sure the EICAS message, FUEL JET NOZ, does not show on the top display.

S 715-271-001
(14) Do these steps to do a test of the flap-angle-limit indication:
(a) Move the flaps to 0 degree position (AMM 27-51-00/201).
(b) Turn the fuel jettison switch to the ON position.

NOTE: When you set the fuel jettison switch to ON (in flight mode), it causes the two forward cooling supply fans and the two forward exhaust fans to stop operation. This causes the EICAS message, NO COOLING , after approximately one minute. These fans will start again when you set the fuel jettison switch to OFF (Ref 21-58-00/501).

(c) Move the flaps to 25 degree position (AMM 27-51-00/201).
(d) Push the L NOZZLE switch-light to the ON position.
(e) After ten seconds, make sure the EICAS message, FUEL JET NOZ, shows on the top display.
(f) Push the L NOZZLE switch-light to the off position.
(g) Make sure the EICAS message, FUEL JET NOZ, does not show on the top display.
(h) Turn the fuel jettison switch to the OFF position.
(i) Move the flaps to the 0 degree position (AMM 27-51-00/201).

S 435-283-001
(15) Install the access panel, 561UBX (AMM 06-44-00/201).

BOEING PROPRIETARY - Copyright (C) - Unpublished Work - See title page for details.

S 865-284-001

(16) Put the airplane back to the ground mode (AMM 32-09-02/201).

NOTE: It is not necessary to put the airplane back in the ground mode if you will also do the flight mode test of the right jettison nozzle valve. Put the airplane in the ground mode after you complete the test for the right jettison nozzle valve.

S 865-090-001

(17) Do the activation procedure for the spoilers if you did the deactivation procedure (AMM 27-61-00/201).

S 865-272-001

(18) Open these circuit breakers and attach DO-NOT-CLOSE tags:
- (a) On the overhead circuit breaker panel, P11:
  - 1) 11M14, L JETT NOZZ VALVE
  - 2) 11M23, R JETT NOZZ VALVE

G. Test of the Right Nozzle Valve in the Flight Mode

S 865-091-001

(1) Make sure these circuit breakers are open:
- (a) On the overhead circuit breaker panel, P11:
  - 1) 11M13, LEFT JETT CONT
  - 2) 11M22, RIGHT JETT CONT
- (b) On the main power distribution panel, P6:
  - 1) 6F15, L FUEL OVRD PUMP
  - 2) 6F21, R FUEL OVRD PUMP

S 865-092-001

WARNING: DO THE DEACTIVATION PROCEDURE FOR THE SPOILERS OR MOVE ALL PERSONS AND EQUIPMENT AWAY FROM THE SPOILERS. THE SPOILERS CAN RETRACT QUICKLY AND CAUSE INJURY TO PERSONS OR DAMAGE TO EQUIPMENT.

(2) Do the deactivation procedure for the spoilers (AMM 27-61-00/201) or move all persons and equipment away from the spoilers.

S 865-093-001

WARNING: MAKE SURE YOU DO THE FLIGHT MODE SIMULATION CORRECTLY. IF THE PROCEDURE IS NOT DONE CORRECTLY, INJURY TO PERSONS OR DAMAGE TO EQUIPMENT CAN OCCUR.

(3) Do the Flight Mode Simulation procedure for the No. 1 air/ground system (AMM 32-09-02/201).

BOEING PROPRIETARY - Copyright (C) - Unpublished Work - See title page for details.

S 865-094-001

(4) Remove the DO-NOT-CLOSE tag and close these circuit breaker:
   (a) On the overhead circuit breaker panel, P11:
      1) 11M23, R JETT NOZZ VALVE
      2) 11M14, L JETT NOZZ VALVE

S 865-268-001

WARNING: MAKE SURE NO PERSONS OR GROUND EQUIPMENT ARE BELOW OR NEAR THE WINGTIPS. FUEL CAN SPILL FROM THE JETTISON NOZZLE OUTLETS AND CAUSE INJURIES TO PERSONS AND DAMAGE TO EQUIPMENT.

CAUTION: MAKE SURE THE REFUEL/JETTISON MANIFOLD IS NOT PRESSURIZED BEFORE YOU OPEN THE JETTISON NOZZLE VALVE. THE FUEL IN THE MANIFOLD CAN BE PRESSURIZED 30 MINUTES AFTER REFUELING, DEFUELING, FUEL JETTISON OR FUEL TRANSFER OPERATIONS. IF THE JETTISON NOZZLE VALVES ARE OPENED, A FUEL SPILL FROM THE JETTISON NOZZLE OUTLETS CAN OCCUR.

(5) Do these steps to remove the pressure from the refuel/jettison manifold:
   (a) On the fueling control panel P28, set the switch for the center auxiliary fueling shutoff valve to the ON position.
   (b) If the fueling manifold is pressurized, make sure the blue fueling valve OPEN lights come on and then go off.
   (c) Wait ten minutes to remove the pressure in the manifold.
   (d) Set the switch for the auxiliary tank fueling shutoff valve to the CLOSED position

S 865-095-001

(6) Push the R NOZZLE switch-light on the fuel jettison control module to the ON position.

S 215-096-001

(7) Do these steps:
   (a) Make sure the ON flowbar comes on.
   (b) Get access to the right nozzle valve on the rear spar of the right wing, inboard of the outboard aileron.
      1) Remove the access panel, 661UBX (AMM 06-44-00/201).
   (c) Make sure the manual override handle on the actuator of the right nozzle valve moves to the OPEN position.
   (d) Make sure the R NOZZLE VALVE light comes on while the right nozzle valve moves to the open position.

S 865-097-001

(8) Push the R NOZZLE switch-light to the off position.

BOEING PROPRIETARY - Copyright (C) - Unpublished Work - See title page for details.

S 215-098-001
(9) Do these steps:
(a) Make sure the ON flowbar goes off.
(b) Make sure the manual override handle on the actuator of the right nozzle valve moves to the CLOSED position.
(c) Make sure the R NOZZLE VALVE light comes on while the right nozzle valve moves to the closed position.

S 035-099-001
(10) Disconnect the electrical connector on the actuator of the right nozzle valve.

S 215-101-001
(11) After ten seconds, do these steps:
(a) Make sure the R NOZZLE VALVE light comes on and stays on.
(b) Make sure the EICAS message, FUEL JET NOZ, shows on the top display.

S 435-103-001
(12) Connect the electrical connector to the actuator of the right nozzle valve.

S 215-104-001
(13) Do these steps:
(a) Make sure the R NOZZLE VALVE light goes off.
(b) Make sure the EICAS message, FUEL JET NOZ, does not show on the top display.

S 215-262-001
(14) Do these steps to do a test of the flap-angle-limit indication:
(a) Move the flaps to 0 degree position (AMM 27-51-00/201).
(b) Turn the fuel jettison switch to the ON position.

NOTE: When you set the fuel jettison switch to ON (in flight mode), it causes the two forward cooling supply fans and the two forward exhaust fans to stop operation. This causes the EICAS message, NO COOLING, after approximately one minute. These fans will start again when you set the fuel jettison switch to OFF (AMM 21-58-00/501).

(c) Move the flaps to 25 degree position (AMM 27-51-00/201).
(d) Push the R NOZZLE switch-light to the ON position.

BOEING PROPRIETARY - Copyright (C) - Unpublished Work - See title page for details.

(e) After ten seconds, make sure the EICAS message, FUEL JET NOZ, shows on the top display.
(f) Push the R NOZZLE switch-light to the off position.
(g) Make sure the EICAS message, FUEL JET NOZ, does not show on the top display.
(h) Turn the fuel jettison switch to the OFF position.
(i) Move the flaps to 0 degree position (AMM 27-51-00/201).

S 435-285-001
(15) Install the access panel, 661UBX (AMM 06-44-00/201).

S 865-130-001
(16) Put the airplane back to the ground mode (AMM 32-09-02/201).

S 865-131-001
(17) Do the activation procedure for the spoilers if you did the deactivation procedure (AMM 27-61-00/201).

S 865-273-001
(18) Open these circuit breakers and attach DO-NOT-CLOSE tags:
(a) On the overhead circuit breaker panel, P11:
1) 11M23, R JETT NOZZ VALVE
2) 11M14, L JETT NOZZ VALVE

H. Test of the Left Nozzle Valve in the Ground Mode

S 865-132-001
(1) Remove the DO-NOT-CLOSE tags and close these circuit breakers:
(a) On the P11 panel:
1) 11M14, LEFT JETT NOZZLE VALVE
2) 11M23, R JETT NOZZ VALVE

S 865-269-001

WARNING: MAKE SURE NO PERSONS OR GROUND EQUIPMENT ARE BELOW OR NEAR THE WINGTIPS. FUEL CAN SPILL FROM THE JETTISON NOZZLE OUTLETS AND CAUSE INJURIES TO PERSONS AND DAMAGE TO EQUIPMENT.

CAUTION: MAKE SURE THE REFUEL/JETTISON MANIFOLD IS NOT PRESSURIZED BEFORE YOU OPEN THE JETTISON NOZZLE VALVE. THE FUEL IN THE MANIFOLD CAN BE PRESSURIZED 30 MINUTES AFTER REFUELING, DEFUELING, FUEL JETTISON OR FUEL TRANSFER OPERATIONS. IF THE JETTISON NOZZLE VALVES ARE OPENED, A FUEL SPILL FROM THE JETTISON NOZZLE OUTLETS CAN OCCUR.

(2) Do these steps to remove the pressure from the refuel/jettison manifold:
(a) On the fueling control panel P28, set the switch for the center auxiliary fueling shutoff valve to the ON position.
(b) If the fueling manifold is pressurized, make sure the blue fueling valve OPEN lights come on and then go off.

BOEING PROPRIETARY - Copyright (C) - Unpublished Work - See title page for details.

(c) Wait ten minutes to remove the pressure in the manifold.
(d) Set the switch for the auxiliary tank fueling shutoff valve to the CLOSED position

S 865-133-001
(3) Push the L NOZZLE switch-light on the fuel jettison control module to the ON position.

S 215-134-001
(4) Make sure the EICAS message, FUEL JET NOZ, shows on the top display after 10 seconds.

S 865-135-001
(5) Push the L NOZZLE switch-light to the off position.

S 215-136-001
(6) After 10 seconds, make sure the EICAS message, FUEL JET NOZ, does not show on the top display.

S 865-137-001
(7) Open these circuit breakers and attach DO-NOT-CLOSE tags:
(a) On the overhead circuit breaker panel, P11:
1) 11M14, LEFT JETT NOZZLE VALVE
2) 11M23, R JETT NOZZ VALVE

I. Test of the Right Nozzle Valve in the Ground Mode

S 865-138-001
(1) Close these circuit breakers:
(a) On the overhead circuit breaker panel, P11:
1) 11M23, R JETT NOZZ VALVE
2) 11M14, L JETT NOZZ VALVE

S 865-270-001

WARNING: MAKE SURE NO PERSONS OR GROUND EQUIPMENT ARE BELOW OR NEAR THE WINGTIPS. FUEL CAN SPILL FROM THE JETTISON NOZZLE OUTLETS AND CAUSE INJURIES TO PERSONS AND DAMAGE TO EQUIPMENT.

CAUTION: MAKE SURE THE REFUEL/JETTISON MANIFOLD IS NOT PRESSURIZED BEFORE YOU OPEN THE JETTISON NOZZLE VALVE. THE FUEL IN THE MANIFOLD CAN BE PRESSURIZED 30 MINUTES AFTER REFUELING, DEFUELING, FUEL JETTISON OR FUEL TRANSFER OPERATIONS. IF THE JETTISON NOZZLE VALVES ARE OPENED, A FUEL SPILL FROM THE JETTISON NOZZLE OUTLETS CAN OCCUR.

(2) Do these steps to remove the pressure from the refuel/jettison manifold:
(a) On the fueling control panel P28, set the switch for the center auxiliary fueling shutoff valve to the ON position.

BOEING PROPRIETARY - Copyright (C) - Unpublished Work - See title page for details.

(b) If the fueling manifold is pressurized, make sure the blue fueling valve OPEN lights come on and then go off.
(c) Wait ten minutes to remove the pressure in the manifold.
(d) Set the switch for the auxiliary tank fueling shutoff valve to the CLOSED position

S 865-139-001
(3) Push the R NOZZLE switch-light on the fuel jettison control module to the ON position.

S 215-140-001
(4) Make sure the EICAS message, FUEL JET NOZ, shows on the top display after 10 seconds.

S 865-141-001
(5) Push the R NOZZLE switch-light to the off position.

S 215-142-001
(6) After 10 seconds, make sure the EICAS message, FUEL JET NOZ, does not show on the top display.

S 865-143-001
(7) Open these circuit breakers and attach DO-NOT-CLOSE tags:
(a) On the overhead circuit breaker panel, P11:
1) 11M23, R JETT NOZZ VALVE
2) 11M14, L JETT NOZZ VALVE

J. Test of the Pressure Switches of the Jettison System

S 865-144-001
(1) Make sure these circuit breakers are open:
(a) On the main power distribution panel, P6:
1) 6F15, L FUEL OVRD PUMP
2) 6F21, R FUEL OVRD PUMP

S 865-145-001
(2) Turn the fuel jettison switch in the fuel jettison control module on the overhead panel, P5, to the ON position.

BOEING PROPRIETARY - Copyright (C) - Unpublished Work - See title page for details.

S 865-146-001
(3) Close these circuit breakers:
(a) On the overhead circuit breaker panel, P11:
1) 11M13, LEFT JETT CONT
2) 11M22, RIGHT JETT CONT

S 215-147-001
(4) After 10 seconds, do the checks that follow:
(a) Make sure the EICAS messages, L FUEL SYS PRESSURE and R FUEL SYS PRESSURE, show on the top display.
(b) Make sure the LEFT and RIGHT C PUMP PRESS lights of the fuel management control panel on the P5 panel come on.

S 015-148-001
(5) Get access to the pressure switch of the left override pump through the wheel well of the left main landing gear.

S 035-149-001
(6) Disconnect the electrical connector on the pressure switch of the left fuel override pump.

S 215-150-001
(7) Do these checks:
(a) Make sure the EICAS message, L FUEL SYS PRESSURE, does not show on the top display.
(b) Make sure the LEFT C PUMP PRESS light goes off.

S 015-151-001
(8) Get access to the pressure switch of the right override pump through the wheel well of the right main landing gear.

S 035-152-001
(9) Disconnect the electrical connector on the pressure switch of the right override pump.

BOEING PROPRIETARY - Copyright (C) - Unpublished Work - See title page for details.

S 215-153-001
(10) Do these checks:
(a) Make sure the EICAS message, R FUEL SYS PRESSURE, does not show on the top display.
(b) Make sure the RIGHT C PUMP PRESS light goes off.

S 435-154-001
(11) Connect the electrical connectors to the left pressure switches of the left and right override pumps.

S 215-155-001
(12) After 10 seconds, do the checks that follow:
(a) Make sure the EICAS messages, L FUEL SYS PRESSURE and R FUEL SYS PRESSURE, show on the top display.
(b) Make sure the LEFT and RIGHT C PUMP PRESS lights on the P5 panel come on.

S 865-156-001
(13) Open these circuit breakers and attach DO-NOT-CLOSE tags:
(a) On the overhead circuit breaker panel, P11:
1) 11M13, LEFT JETT CONT
2) 11M22, RIGHT JETT CONT

S 865-157-001
(14) Turn the fuel jettison switch to the OFF position.

K. Test of the Left Override/Jettison Pump

S 865-185-001
(1) Close these circuit breakers:
(a) On the main power distribution panel, P6:
1) 6F15, L FUEL OVRD PUMP
(b) On the overhead circuit breaker panel, P11:
1) 11M13, LEFT JETT CONT
2) 11M15, FUEL PUMPS L

BOEING PROPRIETARY - Copyright (C) - Unpublished Work - See title page for details.

S 785-281-001
(2) JETTISON PUMPS WITH A DIFFUSER INSTALLED (PN S343T002-5,-8,-12,-15); Do this step:

WARNING: DO NOT OPERATE THE FUEL JETTISON PUMP IF THE FUEL QUANTITY IN THE AUXILIARY TANK IS BELOW 1000 POUNDS (453 KILOGRAMS). DRY FUEL PUMP OPERATION MAY CAUSE FUEL VAPORS IN THE TANK TO IGNITE DUE TO THE GENERATION OF SPARKS CAUSED BY METAL TO METAL CONTACT WITHIN THE FUEL PUMPS.

(a) Make sure there is a minimum fuel quantity of 1000 pounds (453 kilograms) in the auxiliary tank.

S 865-286-001

WARNING: DO NOT OPERATE A FUEL PUMP IF THE LOW PRESSURE LIGHT COMES ON AND STAYS ON. FUEL VAPORS IN THE TANK MAY IGNITE AND CAUSE A FIRE OR EXPLOSION.

(3) To operate any of the fuel pumps, you must be in the flight compartment to continuously monitor the fuel quantity and the low pressure indication in the fuel tank.
(a) Immediately set the applicable fuel pump switch to OFF if the LOW PRESSURE light comes on and stays on.

S 715-279-001
(4) Turn the fuel jettison switch on the fuel jettison control panel to the ON position.

S 285-188-001
(5) Listen at the left access cover, 531AB, to make sure the left override pump operates (AMM 06-44-00/201).

S 865-189-001
(6) Open this circuit breaker and attach a DO-NOT-CLOSE tag:
(a) On the overhead circuit breaker panel, P11:
1) 11M13, LEFT JETT CONT

S 285-190-001
(7) Listen to make sure the left override pump stops.

S 865-191-001
(8) Remove the DO-NOT-CLOSE tag and close this circuit breaker:
(a) On the overhead circuit breaker panel, P11:
1) 11M13, LEFT JETT CONT

S 285-192-001
(9) Listen to make sure the left override pump operates.

BOEING PROPRIETARY - Copyright (C) - Unpublished Work - See title page for details.

S 865-193-001
(10) Open this circuit breaker and attach a DO-NOT-CLOSE tag:
(a) On the main power distribution panel, P6:
1) 6F15, L FUEL OVRD PUMP

S 865-194-001
(11) Open this circuit breaker and attach a DO-NOT-CLOSE tag:
(a) On the overhead circuit breaker panel, P11:
1) 11M15, FUEL PUMPS L

S 285-195-001
(12) Listen to make sure the left override pump stops.

S 865-196-001
(13) Turn the fuel jettison switch to the OFF position.

S 865-197-001
(14) Open this circuit breaker and attach a DO-NOT-CLOSE tag:
(a) On the overhead circuit breaker panel, P11:
1) 11M13, LEFT JETT CONT

L. Test of the Right Override/Jettison Pump

S 865-223-001
(1) Close these circuit breakers:
(a) On the main power distribution panel, P6:
1) 6F21, R FUEL OVRD PUMP
(b) On the overhead circuit breaker panel, P11:
1) 11M22, RIGHT JETT CONT
2) 11M24, FUEL PUMPS R

S 785-282-001
(2) JETTISON PUMPS WITH A DIFFUSER INSTALLED (PN S343T002-5,-8,-12,-15); Do this step:

WARNING: DO NOT OPERATE THE FUEL JETTISON PUMP IF THE FUEL QUANTITY IN THE AUXILIARY TANK IS BELOW 1000 POUNDS (453 KILOGRAMS). DRY FUEL PUMP OPERATION MAY CAUSE FUEL VAPORS IN THE TANK TO IGNITE DUE TO THE GENERATION OF SPARKS CAUSED BY METAL TO METAL CONTACT WITHIN THE FUEL PUMPS.

(a) Make sure there is a minimum fuel quantity of 1000 pounds (453 kilograms) in the auxiliary tank.

BOEING PROPRIETARY - Copyright (C) - Unpublished Work - See title page for details.

S 865-287-001

WARNING: DO NOT OPERATE A FUEL PUMP IF THE LOW PRESSURE LIGHT COMES ON AND STAYS ON. FUEL VAPORS IN THE TANK MAY IGNITE AND CAUSE A FIRE OR EXPLOSION.

(3) To operate any of the fuel pumps, you must be in the flight compartment to continuously monitor the fuel quantity and the low pressure indication in the fuel tank.
   (a) Immediately set the applicable fuel pump switch to OFF if the LOW PRESSURE light comes on and stays on.

S 715-280-001
(4) Turn the fuel jettison switch on the fuel jettison control panel to the ON position.

S 285-226-001
(5) Listen at the right access cover, 631AB, to make sure the right override pump operates (AMM 06-44-00/201).

S 865-227-001
(6) Open this circuit breaker on the P11 panel:
   (a) 11M22, RIGHT JETT CONT

S 865-228-001
(7) Listen to make sure the right override pump stops.

S 865-229-001
(8) Remove the DO-NOT-CLOSE tag and close this circuit breaker:
   (a) On the overhead circuit breaker panel, P11:
      1) 11M22, RIGHT JETT CONT

S 285-230-001
(9) Listen to make sure the right override pump operates.

S 865-231-001
(10) Open these circuit breakers and attach DO-NOT-CLOSE tags:
   (a) On the main power distribution panel, P6:
      1) 6F21, R FUEL OVRD PUMP
   (b) On the overhead circuit breaker panel, P11:
      1) 11M24, FUEL PUMPS R

S 285-232-001
(11) Listen to make sure the right override pump stops.

S 865-233-001
(12) Turn the fuel jettison switch to the OFF position.

BOEING PROPRIETARY - Copyright (C) - Unpublished Work - See title page for details.

S 865-234-001
(13) Open this circuit breaker and attach a DO-NOT-CLOSE tag:
(a) On the overhead circuit breaker panel, P11:
1) 11M22, RIGHT JETT CONT

M. Put the Airplane Back to Its Usual Condition

S 865-266-001
(1) Remove the DO-NOT-CLOSE tags and close these circuit breakers:
(a) On the main power distribution panel, P6:
1) 6F15, L FUEL OVRD PUMP
2) 6F21, R FUEL OVRD PUMP
(b) On the overhead circuit breaker panel, P11:
1) 11M13, LEFT JETT CONT
2) 11M22, RIGHT JETT CONT
3) 11M14, LEFT JETT NOZZLE VALVE
4) 11M15, FUEL PUMPS L
5) 11M23, RIGHT JETT NOZZLE VALVE
6) 11M24, FUEL PUMPS R

S 095-258-001

WARNING: USE THE PROCEDURE IN AMM 32-00-15/201 TO REMOVE THE DOOR LOCKS. THE DOORS OPEN AND CLOSE QUICKLY AND CAN CAUSE INJURY TO PERSONS OR DAMAGE TO EQUIPMENT.

(2) Remove the door locks from the landing gear doors and close the doors (AMM 32-00-15/201).

S 865-259-001

WARNING: DO THE ACTIVATION PROCEDURE FOR THE TRAILING EDGE FLAPS. ACCIDENTAL OPERATION OF THE TRAILING EDGE FLAPS COULD CAUSE INJURY TO PERSONS.

(3) Do the activation procedure for the trailing edge flaps (AMM 27-51-00/201).

S 865-260-001
(4) Remove the DO-NOT-OPERATE tag from the speedbrake lever.

S 865-261-001
(5) Remove electrical power from the airplane if it is not necessary (AMM 24-22-00/201).

BOEING PROPRIETARY - Copyright (C) - Unpublished Work - See title page for details.

FUEL JETTISON SYSTEM - ADJUSTMENT/TEST

1. General
   A. This procedure gives instructions to do an operational test of the fuel jettison system and a phase check of the jettison pump wiring.
   B. EFFECTIVITY
      (1) SAS 150, 152-154 POST-SB 28-27;
      SAS 155-157, 165-167 POST-SB 28-38;
      SAS 050, 051, 162-164 POST-SB 28-25;
      SAS 052-149, 158-161, 168-999;
      MTH 275 POST-SB 28-27;
      MTH 277-999;
      These effectivities apply to the document. The text "LIMITED - SEE TOP OF FIRST PAGE" refers to these effectivities.

TASK 28-31-00-715-001-002

2. Operational Test - Fuel Jettison System
   A. General
      (1) This procedure gives instructions to do a test of the subsequent fuel jettison system components:
      (a) Transfer valves
      (b) Nozzle valves
      (c) Pressure switches of the jettison system
      (d) Override/jettison pumps.
      (2) It is not necessary to do all of these procedures to test one component. To test one component, do the test preparation procedure, the applicable test for that component, and the procedure to put the airplane back to its usual condition. For example, to do a test of the left override/jettison pump, do these procedures:
      (a) Prepare to do a Test
      (b) Test of the Left Override/Jettison Pump
      (c) Put the Airplane Back to Its Usual Condition
      (3) The override/jettison pumps cannot be operated with less than 1000 pounds (453 kilograms) per AD 97-19-15. This restriction applies to airplanes that have one or more override/jettison pumps that have inlet diffusers attached by screws (P/N S343T002-5, -8, -12, -15). SB 28-52 and SB-62 replace these pumps with pumps that either have no diffusers or have a cast-in inlet diffuser. When all the pumps are replaced with new or modified pumps (P/N S343T002-23 or higher dash number) there is no minimum fuel restriction. Do not use JP4 or JET-B fuel after the new or modified override pump is installed.
   B. References
      (1) AMM 06-44-00/201, Wing Access Doors and Panels
      (2) AMM 12-11-01/301, Fuel Tank Pressure Fueling
      (3) AMM 24-22-00/201, Electrical Power - Control
      (4) AMM 27-51-00/201, Trailing Edge Flap System
      (5) AMM 27-61-00/201, Spoiler/Speedbrake Control System
      (6) AMM 28-26-00/201, Defueling
      (7) AMM 32-00-15/201, Landing Gear Door Locks
      (8) AMM 32-00-20/201, Landing Gear Downlocks

BOEING PROPRIETARY - Copyright (C) - Unpublished Work - See title page for details.

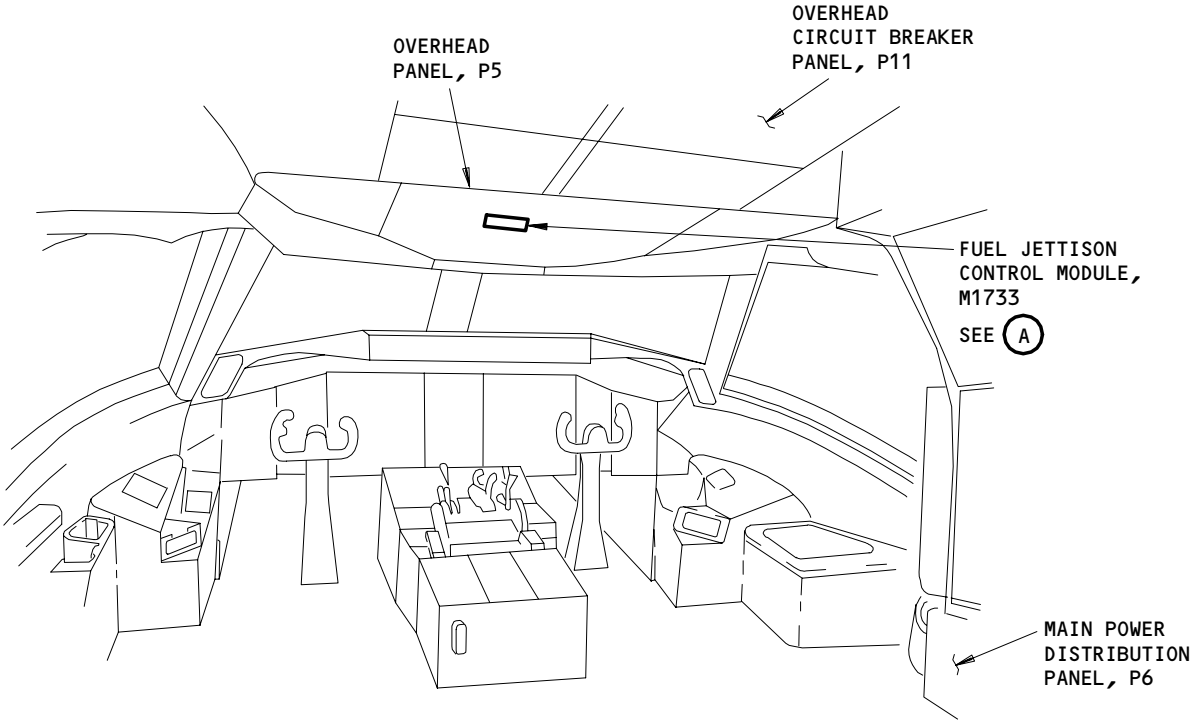

FLIGHT COMPARTMENT

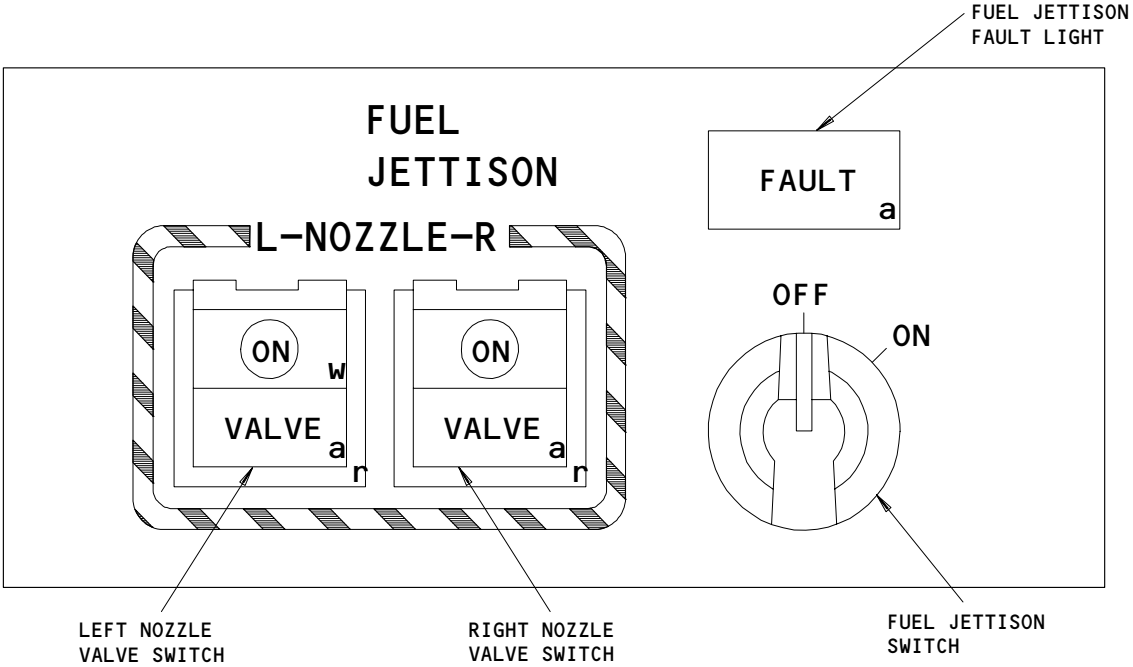

FUEL JETTISON CONTROL MODULE, M1733

A

Fuel Jettison Control Module
Figure 501

BOEING PROPRIETARY - Copyright (C) - Unpublished Work - See title page for details.

(9) AMM 32-09-02/201, Air/Ground Relays

C. Access

(1) Location Zones

531 Center Auxilary Tank (Left)
541 Main Tank - Outboard of Rib No. 10 (Left)
631 Center Auxiliary Tank (Right)
641 Main Tank - Outboard of Rib No. 10 (Right)

(2) Access Panels

531AB Access Cover (Left)
561UBX Wing Access Panel (Left)
631AB Access Cover (Right)
661UBX Wing Access Panel (Right)

D. Prepare to Do a Test

S 865-002-002

(1) Supply electrical power to the airplane (AMM 24-22-00/201).

S 655-004-002

(2) Refuel the airplane if it is necessary (AMM 12-11-01/301).

NOTE: The minimum fuel quantity necessary to make sure all of the override/jettison pumps are correctly primed is 21,700 lbs (9900 kgs) in the auxiliary fuel tank.

You can refuel the auxiliary fuel tank by pressure fueling (AMM 12-11-01/301) or by tank to tank transfer (AMM 28-26-00/201).

S 215-005-002

(3) Make sure the fuel jettison switch on the overhead panel, P5, is in the OFF position.

S 215-006-002

(4) Make sure the six EICAS circuit breakers are closed.

S 865-007-002

WARNING: DO THE DEACTIVATION PROCEDURE FOR THE TRAILING EDGE FLAPS. ACCIDENTAL OPERATION OF THE TRAILING EDGE FLAPS COULD CAUSE INJURY TO PERSONS.

(5) Do the deactivation procedure for the trailing edge flaps (AMM 27-51-00/201).

S 215-008-002

(6) Make sure the downlocks are installed on the nose and main landing gear (AMM 32-00-20/201).

BOEING PROPRIETARY - Copyright (C) - Unpublished Work - See title page for details.

S 495-009-002

WARNING: USE THE PROCEDURE IN AMM 32-00-15/201 TO INSTALL THE DOOR LOCKS. THE DOORS OPEN AND CLOSE QUICKLY AND CAN CAUSE INJURY TO PERSONS OR DAMAGE TO EQUIPMENT.

(7) Open the doors for the landing gear and install the door locks (AMM 32-00-15/201).

S 865-010-002

WARNING: MAKE SURE THE SPOILERS ARE FULLY RETRACTED DURING THE FUEL JETTISON TEST. IF THE SPOILERS ARE NOT FULLY RETRACTED, THE SPOILERS CAN RETRACT SUDDENLY AND CAUSE INJURY TO PERSONS AND DAMAGE TO EQUIPMENT.

(8) Make sure all of the spoilers are in their full down positions (fully retracted) (AMM 27-61-00/201).

NOTE: Operation of the fuel jettison transfer valve can cause the air/ground system to go into air mode momentarily. This causes the spoilers to retract suddenly if they are in the up position.

(a) The speedbrake lever must be in its down-and-locked detent position.
(b) Attach a DO-NOT-OPERATE tag to the speedbrake lever.

S 865-287-002

(9) Open these circuit breakers and attach DO-NOT-CLOSE tags:
(a) P6 Main Power Distribution Panel
1) 6F15, L FUEL OVRD PUMP
2) 6F21, R FUEL OVRD PUMP
(b) P11 Overhead Circuit Breaker Panel
1) 11M13, LEFT JETT CONT
2) 11M22, RIGHT JETT CONT
3) 11M14, LEFT JETT NOZZLE VALVE
4) 11M15, FUEL PUMPS L
5) 11M23, RIGHT JETT NOZZLE VALVE
6) 11M24, FUEL PUMPS R
(c) On the left miscellaneous electrical equipment panel, P36:
1) 36F4 or 36G7, L FUEL JETT PUMP

BOEING PROPRIETARY - Copyright (C) - Unpublished Work - See title page for details.

(d) On the right miscellaneous electrical equipment panel, P37:
1) 37F4 or 37G4, R FUEL JETT PUMP

E. Test of the Transfer Valves

S 865-011-002
(1) Remove the DO-NOT-CLOSE tags and close these circuit breakers:
(a) On the overhead circuit breaker panel, P11:
1) 11M13, LEFT JETT CONT
2) 11M22, RIGHT JETT CONT

S 015-012-002
(2) Get access to the transfer valves through the wheel wells of the main landing gear.

S 035-023-002
(3) Disconnect the electrical connectors from the pressure switches of the left and right jettison pumps.

S 035-013-002
(4) Disconnect the electrical connector from the actuator for the right transfer valve.
(a) Make sure the fuel jettison FAULT light comes on after 10 seconds.
(b) Make sure the EICAS message, R JET XFR VALVE, shows on the top display after 10 seconds.

S 865-024-002
(5) Turn the fuel jettison switch on the overhead panel, P5, to the ON position.

NOTE: When you set the fuel jettison switch to ON (in ground mode) it causes the two AFT equipment fans to stop operation. The fans will start again when you set the fuel jettison switch to OFF (AMM 21-58-00/501). If the cooling fans do not operate as expected, refer to FIM 28-31-00, Fig. 107.

BOEING PROPRIETARY - Copyright (C) - Unpublished Work - See title page for details.

S 215-292-002
(6) Make sure the manual override handle on the actuator of the left transfer valve moves to the OPEN position.

S 215-302-002
(7) Make sure the EICAS message, L JET XFR VALVE, does not show on the top display.

S 865-028-002
(8) Turn the fuel jettison switch to the OFF position.

S 435-026-002
(9) Connect the electrical connector to the actuator of the right transfer valve.

S 215-027-002
(10) Do these checks:
(a) Make sure the fuel jettison FAULT light goes off.
(b) Make sure the EICAS message, R JET XFR VALVE, does not show on the top display.

S 035-029-002
(11) Disconnect the electrical connector from the actuator of the left transfer valve.
(a) Make sure the fuel jettison FAULT light comes on after 10 seconds.
(b) Make sure the EICAS message, L JET XFR VALVE, shows on the top display after 10 seconds.

S 865-030-002
(12) Turn the fuel jettison switch to the ON position.

S 215-031-002
(13) Do these checks:

S 215-293-002
(14) Make sure the manual override handle on the actuator of the right transfer valve moves to the OPEN position.

BOEING PROPRIETARY - Copyright (C) - Unpublished Work - See title page for details.

S 215-303-002
(15) Make sure the EICAS message R JET XFR VALVE, does not show on the top display.

S 865-034-002
(16) Turn the fuel jettison switch to the OFF position.

S 435-032-002
(17) Connect the electrical connector to the actuator of the left transfer valve.

S 215-033-002
(18) Do these checks:
(a) Make sure the fuel jettison FAULT light goes off.
(b) Make sure the EICAS message, L JET XFR VALVE, does not show on the top display.

S 865-035-002
(19) Turn the fuel jettison switch to the ON position.

S 215-304-002
(20) Make sure the manual override handle on the actuator of the left transfer valve moves to the open position.

S 215-036-002
(21) Do these checks:
(a) Make sure the fuel jettison FAULT light does not come on.
(b) Make sure the EICAS messages, L JET XFER VALVE and R JET XFER VALVE, do not show on the top display.

S 865-037-002
(22) Turn the fuel jettison switch to the OFF position.

S 215-305-002
(23) Make sure the manual override handles on the actuators of the left and right transfer valves move to the closed position.
(a) Make sure the fuel jettison FAULT light does not come on.
(b) Make sure the EICAS messages, L JET XFER VALVE and R JET XFER VALVE, do not show on the top display.

S 435-047-002
(24) Connect the electrical connectors to the pressure switches of the left and right jettison pumps.

S 865-288-002
(25) Open these circuit breakers and attach DO-NOT-CLOSE tags:
(a) P11 Overhead Circuit Breaker Panel
1) 11M13, LEFT JETT CONT
2) 11M22, RIGHT JETT CONT

BOEING PROPRIETARY - Copyright (C) - Unpublished Work - See title page for details.

F. Test of the Left Nozzle Valve in the Flight Mode

S 865-289-002

(1) Make sure these circuit breakers are open:
  (a) P11 Overhead Circuit Breaker Panel
    1) 11M13, LEFT JETT CONT
    2) 11M22, RIGHT JETT CONT
  (b) P6 Main Power Distribution Panel
    1) 6F15, L FUEL OVRD PUMP
    2) 6F21, R FUEL OVRD PUMP

S 865-048-002

WARNING: DO THE DEACTIVATION PROCEDURE FOR THE SPOILERS OR MOVE ALL PERSONS AND EQUIPMENT AWAY FROM THE SPOILERS. THE SPOILERS CAN RETRACT QUICKLY AND CAUSE INJURY TO PERSONS OR DAMAGE TO EQUIPMENT.

(2) Do the deactivation procedure for the spoilers (AMM 27-61-00/201) or move all persons and equipment away from the spoilers.

S 865-049-002

WARNING: MAKE SURE YOU DO THE FLIGHT MODE SIMULATION CORRECTLY. IF THE PROCEDURE IS NOT DONE CORRECTLY, INJURY TO PERSONS OR DAMAGE TO EQUIPMENT CAN OCCUR.

(3) Do the Flight Mode Simulation procedure for the No. 1 air/ground system (AMM 32-09-02/201).

S 865-050-002

(4) Remove the DO-NOT-CLOSE tags and close these circuit breakers:
  (a) P11 Overhead Circuit Breaker Panel
    1) 11M14, LEFT JETT NOZZLE VALVE
    2) 11M23, RIGHT JETT NOZZLE VALVE

BOEING PROPRIETARY - Copyright (C) - Unpublished Work - See title page for details.

S 865-283-002

WARNING: MAKE SURE NO PERSONS OR GROUND EQUIPMENT ARE BELOW OR NEAR THE WINGTIPS. FUEL CAN SPILL FROM THE JETTISON NOZZLE OUTLETS AND CAUSE INJURIES TO PERSONS AND DAMAGE TO EQUIPMENT.

CAUTION: MAKE SURE THE REFUEL/JETTISON MANIFOLD IS NOT PRESSURIZED BEFORE YOU OPEN THE JETTISON NOZZLE VALVE. THE FUEL IN THE MANIFOLD CAN BE PRESSURIZED 30 MINUTES AFTER REFUELING, DEFUELING, FUEL JETTISON OR FUEL TRANSFER OPERATIONS. IF THE JETTISON NOZZLE VALVES ARE OPENED, A FUEL SPILL FROM THE JETTISON NOZZLE OUTLETS CAN OCCUR.

(5) Do these steps to remove the pressure from the refuel/jettison manifold:
   (a) On the fueling control panel P28, set the switch for the center auxiliary fueling shutoff valve to the ON position.
   (b) If the fueling manifold is pressurized, make sure the blue fueling valve OPEN lights come on and then go off.
   (c) Wait ten minutes to remove the pressure in the manifold.
   (d) Set the switch for the auxiliary tank fueling shutoff valve to the CLOSED position

S 865-051-002

(6) Push the L NOZZLE switch-light on the fuel jettison control module to the ON position.

S 215-052-002

(7) Do these checks:
   (a) Make sure the ON flowbar comes on.
   (b) Get access to the left nozzle valve on the rear spar of the left wing, inboard of the outboard aileron.
      1) Remove the access panel, 561UBX (AMM 06-44-00/201).
   (c) Make sure the manual override handle on the actuator of the left nozzle valve moves to the OPEN position.
   (d) Make sure the L NOZZLE VALVE light comes on while the left nozzle valve moves to the open position.

S 865-053-002

(8) Push the L NOZZLE switch-light to the off position.

S 215-054-002

(9) Do these checks:
   (a) Make sure the ON flowbar goes off.
   (b) Make sure the manual override handle on the actuator of the left nozzle valve moves to the CLOSED position.
   (c) Make sure the L NOZZLE VALVE light comes on while the left nozzle valve moves to the closed position.

BOEING PROPRIETARY - Copyright (C) - Unpublished Work - See title page for details.

S 035-055-002
(10) Disconnect the electrical connector on the actuator of the left nozzle valve.

S 215-306-002
(11) Make sure the L NOZZLE VALVE light comes on and stays on.

S 215-307-002
(12) After six seconds, make sure the EICAS message, FUEL JET NOZ, shows on the top display.

S 435-059-002
(13) Connect the electrical connector to the actuator of the left nozzle valve.

S 215-060-002
(14) Do these checks:
(a) Make sure the L NOZZLE VALVE light goes off.
(b) Make sure the EICAS message, FUEL JET NOZ, does not show on the top display.

S 435-313-002
(15) Install the access panel, 561UBX (AMM 06-44-00/201).

S 865-089-002
(16) Put the airplane back to the ground mode (AMM 32-09-02/201).

NOTE: It is not necessary to put the airplane back in the ground mode if you will also do the flight mode test of the right jettison nozzle valve. Put the airplane in the ground mode after you complete the test for the right jettison nozzle valve.

S 865-090-002
(17) Do the activation procedure for the spoilers if you did the deactivation procedure (AMM 27-61-00/201).

S 865-285-002
(18) Open these circuit breakers and attach DO-NOT-CLOSE tags:
(a) P11 Overhead Circuit Breaker Panel
1) 11M14, L JETT NOZZLE VALVE
2) 11M23, RIGHT JETT NOZZLE VALVE

BOEING PROPRIETARY - Copyright (C) - Unpublished Work - See title page for details.

G. Test of the Right Nozzle Valve in the Flight Mode

S 865-091-002

(1) Make sure these circuit breakers are open:
  (a) P11 Overhead Circuit Breaker Panel
    1) 11M13, LEFT JETT CONT
    2) 11M22, RIGHT JETT CONT
  (b) P6 Main Power Distribution Panel
    1) 6F15, L FUEL OVRD PUMP
    2) 6F21, R FUEL OVRD PUMP

S 865-092-002

WARNING: DO THE DEACTIVATION PROCEDURE FOR THE SPOILERS OR MOVE ALL PERSONS AND EQUIPMENT AWAY FROM THE SPOILERS. THE SPOILERS CAN RETRACT QUICKLY AND CAUSE INJURY TO PERSONS OR DAMAGE TO EQUIPMENT.

(2) Do the deactivation procedure for the spoilers (AMM 27-61-00/201) or move all persons and equipment away from the spoilers.

S 865-093-002

WARNING: MAKE SURE YOU DO THE FLIGHT MODE SIMULATION CORRECTLY. IF THE PROCEDURE IS NOT DONE CORRECTLY, INJURY TO PERSONS OR DAMAGE TO EQUIPMENT CAN OCCUR.

(3) Do the Flight Mode Simulation procedure for the No. 1 air/ground system (AMM 32-09-02/201).

S 865-094-002

(4) Remove the DO-NOT-CLOSE tags and close these circuit breakers:
  (a) P11 Overhead Circuit Breaker Panel
    1) 11M23, RIGHT JETT NOZZLE VALVE
    2) 11M14, LEFT JETT NOZZLE VALVE

BOEING PROPRIETARY - Copyright (C) - Unpublished Work - See title page for details.

S 865-282-002

WARNING: MAKE SURE NO PERSONS OR GROUND EQUIPMENT ARE BELOW OR NEAR THE WINGTIPS. FUEL CAN SPILL FROM THE JETTISON NOZZLE OUTLETS AND CAUSE INJURIES TO PERSONS AND DAMAGE TO EQUIPMENT.

CAUTION: MAKE SURE THE REFUEL/JETTISON MANIFOLD IS NOT PRESSURIZED BEFORE YOU OPEN THE JETTISON NOZZLE VALVE. THE FUEL IN THE MANIFOLD CAN BE PRESSURIZED 30 MINUTES AFTER REFUELING, DEFUELING, FUEL JETTISON OR FUEL TRANSFER OPERATIONS. IF THE JETTISON NOZZLE VALVES ARE OPENED, A FUEL SPILL FROM THE JETTISON NOZZLE OUTLETS CAN OCCUR.

(5) Do these steps to remove the pressure from the refuel/jettison manifold:
   (a) On the fueling control panel P28, set the switch for the center auxiliary fueling shutoff valve to the ON position.
   (b) If the fueling manifold is pressurized, make sure the blue fueling valve OPEN lights come on and then go off.
   (c) Wait ten minutes to remove the pressure in the manifold.
   (d) Set the switch for the auxiliary tank fueling shutoff valve to the CLOSED position

S 865-095-002
(6) Push the R NOZZLE switch-light on the fuel jettison control module to the ON position.

S 215-096-002
(7) Do these steps:
   (a) Make sure the ON flowbar comes on.
   (b) Get access to the right nozzle valve on the rear spar of the right wing, inboard of the outboard aileron.
      1) Remove the access panel, 661UBX (AMM 06-44-00/201).
   (c) Make sure the manual override handle on the actuator of the right nozzle valve moves to the OPEN position.
   (d) Make sure the R NOZZLE VALVE light comes on while the right nozzle valve moves to the open position.

S 865-097-002
(8) Push the R NOZZLE switch-light to the off position.

S 215-098-002
(9) Do these steps:
   (a) Make sure the ON flowbar goes off.
   (b) Make sure the manual override handle on the actuator of the right nozzle valve moves to the CLOSED position.
   (c) Make sure the R NOZZLE VALVE light comes on while the right nozzle valve moves to the closed position.

BOEING PROPRIETARY - Copyright (C) - Unpublished Work - See title page for details.

S 035-099-002
(10) Disconnect the electrical connector on the actuator of the right nozzle valve.

S 215-308-002
(11) Make sure the R NOZZLE VALVE light comes on and stays on.

S 215-309-002
(12) After six seconds, make sure the EICAS message, FUEL JET NOZ, shows on the top display.

S 435-103-002
(13) Connect the electrical connector to the actuator of the right nozzle valve.

S 215-104-002
(14) Do these steps:
(a) Make sure the R NOZZLE VALVE light goes off.
(b) Make sure the EICAS message, FUEL JET NOZ, does not show on the top display.

S 435-314-002
(15) Install the access panel, 661UBX (AMM 06-44-00/201).

S 865-130-002
(16) Put the airplane back to the ground mode (AMM 32-09-02/201).

S 865-131-002
(17) Do the activation procedure for the spoilers if you did the deactivation procedure (AMM 27-61-00/201).

S 865-286-002
(18) Open these circuit breakers and attach DO-NOT-CLOSE tags:
(a) P11 Overhead Circuit Breaker Panel
1) 11M23, R JETT NOZZLE VALVE
2) 11M14, LEFT JETT NOZZLE VALVE

H. Test of the Left Nozzle Valve in the Ground Mode

S 865-132-002
(1) Remove the DO-NOT-CLOSE tags and close these circuit breakers:
(a) P11 Overhead Circuit Breaker Panel
1) 11M14, LEFT JETT NOZZLE VALVE
2) 11M23, RIGHT JETT NOZZLE VALVE

BOEING PROPRIETARY - Copyright (C) - Unpublished Work - See title page for details.

S 865-291-002

WARNING: MAKE SURE NO PERSONS OR GROUND EQUIPMENT ARE BELOW OR NEAR THE WINGTIPS. FUEL CAN SPILL FROM THE JETTISON NOZZLE OUTLETS AND CAUSE INJURIES TO PERSONS AND DAMAGE TO EQUIPMENT.

CAUTION: MAKE SURE THE REFUEL/JETTISON MANIFOLD IS NOT PRESSURIZED BEFORE YOU OPEN THE JETTISON NOZZLE VALVE. THE FUEL IN THE MANIFOLD CAN BE PRESSURIZED 30 MINUTES AFTER REFUELING, DEFUELING, FUEL JETTISON OR FUEL TRANSFER OPERATIONS. IF THE JETTISON NOZZLE VALVES ARE OPENED, A FUEL SPILL FROM THE JETTISON NOZZLE OUTLETS CAN OCCUR.

(2) Do these steps to remove the pressure from the refuel/jettison manifold:
  (a) On the fueling control panel P28, set the switch for the center auxiliary fueling shutoff valve to the ON position.
  (b) If the fueling manifold is pressurized, make sure the blue fueling valve OPEN lights come on and then go off.
  (c) Wait ten minutes to remove the pressure in the manifold.
  (d) Set the switch for the auxiliary tank fueling shutoff valve to the CLOSED position

S 865-133-002
(3) Push the L NOZZLE switch-light on the fuel jettison control module to the ON position.

S 215-134-002
(4) Make sure the EICAS message, FUEL JET NOZ, shows on the top display after 6 seconds.

S 865-135-002
(5) Push the L NOZZLE switch-light to the off position.

S 215-136-002
(6) Make sure the EICAS message, FUEL JET NOZ, does not show on the top display.

S 865-137-002
(7) Open these circuit breakers and attach DO-NOT-CLOSE tags:
  (a) P11 Overhead Circuit Breaker Panel
    1) 11M14, LEFT JETT NOZZLE VALVE
    2) 11M23, RIGHT JETT NOZZLE VALVE

I. Test of the Right Nozzle Valve in the Ground Mode

S 865-138-002
(1) Remove the DO-NOT-CLOSE tags and close these circuit breakers:
  (a) P11 Overhead Circuit Breaker Panel
    1) 11M23, RIGHT JETT NOZZLE VALVE

BOEING PROPRIETARY - Copyright (C) - Unpublished Work - See title page for details.

2) 11M14, LEFT JETT NOZZLE VALVE

S 865-284-002

WARNING: MAKE SURE NO PERSONS OR GROUND EQUIPMENT ARE BELOW OR NEAR THE WINGTIPS. FUEL CAN SPILL FROM THE JETTISON NOZZLE OUTLETS AND CAUSE INJURIES TO PERSONS AND DAMAGE TO EQUIPMENT.

CAUTION: MAKE SURE THE REFUEL/JETTISON MANIFOLD IS NOT PRESSURIZED BEFORE YOU OPEN THE JETTISON NOZZLE VALVE. THE FUEL IN THE MANIFOLD CAN BE PRESSURIZED 30 MINUTES AFTER REFUELING, DEFUELING, FUEL JETTISON OR FUEL TRANSFER OPERATIONS. IF THE JETTISON NOZZLE VALVES ARE OPENED, A FUEL SPILL FROM THE JETTISON NOZZLE OUTLETS CAN OCCUR.

(2) Do these steps to remove the pressure from the refuel/jettison manifold:
   (a) On the fueling control panel P28, set the switch for the center auxiliary fueling shutoff valve to the ON position.
   (b) If the fueling manifold is pressurized, make sure the blue fueling valve OPEN lights come on and then go off.
   (c) Wait ten minutes to remove the pressure in the manifold.
   (d) Set the switch for the auxiliary tank fueling shutoff valve to the CLOSED position

S 865-139-002

(3) Push the R NOZZLE switch-light on the fuel jettison control module to the ON position.

S 215-140-002

(4) Make sure the EICAS message, FUEL JET NOZ, shows on the top display after 6 seconds.

S 865-141-002

(5) Push the R NOZZLE switch-light to the off position.

S 215-142-002

(6) Make sure the EICAS message, FUEL JET NOZ, does not show on the top display.

S 865-143-002

(7) Open these circuit breakers and attach DO-NOT-CLOSE tags:
   (a) P11 Overhead Circuit Breaker Panel
      1) 11M23, RIGHT JETT NOZZLE VALVE
      2) 11M14, LEFT JETT NOZZLE VALVE

BOEING PROPRIETARY - Copyright (C) - Unpublished Work - See title page for details.

J. Test of the Pressure Switches of the Jettison System

S 865-158-002
(1) Make sure these circuit breakers are open:
(a) P6 Main Power Distribution Panel
1) 6F15, L FUEL OVRD PUMP
2) 6F21, R FUEL OVRD PUMP
(b) On the left miscellaneous electrical equipment panel, P36:
1) 36F4 or 36G7, L FUEL JETT PUMP
(c) On the right miscellaneous electrical equipment panel, P37:
1) 37F4 or 37G4, R FUEL JETT PUMP

S 865-159-002
(2) Turn the fuel jettison switch in the fuel jettison control module on the overhead panel, P5, to the ON position.

S 865-160-002
(3) Remove the DO-NOT-CLOSE tag and close these circuit breakers:
(a) P11 Overhead Circuit Breaker Panel
1) 11M13, LEFT JETT CONT
2) 11M22, RIGHT JETT CONT

S 215-161-002
(4) Make sure the EICAS messages, L FUEL SYS PRESS and R FUEL SYS PRESS, show on the top display.

S 215-163-002
(5) After 10 seconds, do the checks that follow:
(a) Make sure the EICAS messages, L FUEL JET PUMP and R FUEL JET PUMP, show on the top display.
(b) Make sure the fuel jettison FAULT light on the fuel jettison control module comes on.

S 015-164-002
(6) Get access to the pressure switch of the left override pump through the wheel well of the left main landing gear.

BOEING PROPRIETARY - Copyright (C) - Unpublished Work - See title page for details.

S 025-317-002

WARNING: MAKE SURE EACH ELECTRICAL CONNECTOR HAS A TAG TO IDENTIFY THE CORRECT INSTALLATION LOCATION TO THE OVERRIDE PUMP. CROSS-CONNECTION OF THE ELECTRICAL CONNECTORS CAN CAUSE THE AIRPLANE SYSTEM TO MALFUNCTION AND THE LOSS OF SAFE FLIGHT.

(7) Disconnect the electrical connector on the pressure switch of the left fuel override pump.

S 215-310-002

(8) Make sure the EICAS message, L FUEL SYS PRESS, does not show on the top display.

S 015-167-002

(9) Get access to the pressure switch of the left jettison pump through the wheel well of the left main landing gear.

S 025-318-002

WARNING: MAKE SURE EACH ELECTRICAL CONNECTOR HAS A TAG TO IDENTIFY THE CORRECT INSTALLATION OF THE JETTISON PUMP. CROSS-CONNECTION OF THE ELECTRICAL CONNECTORS CAN CAUSE THE AIRPLANE SYSTEM TO MALFUNCTION AND THE LOSS OF SAFE FLIGHT.

(10) Disconnect the electrical connector (D12192) on the pressure switch of the left jettison pump.

S 215-169-002

(11) Make sure the EICAS message, L FUEL JET PUMP, does not show on the top display.

S 215-311-002

(12) Make sure the fuel jettison FAULT light stays on.

S 015-170-002

(13) Get access to the pressure switch of the right override pump through the wheel well of the right main landing gear.

S 025-321-002

WARNING: MAKE SURE EACH ELECTRICAL CONNECTOR HAS A TAG TO IDENTIFY THE CORRECT INSTALLATION LOCATION TO THE OVERRIDE PUMP. CROSS-CONNECTION OF THE ELECTRICAL CONNECTORS CAN CAUSE THE AIRPLANE SYSTEM TO MALFUNCTION AND THE LOSS OF SAFE FLIGHT.

(14) Disconnect the electrical connector on the pressure switch of the right override pump.

BOEING PROPRIETARY - Copyright (C) - Unpublished Work - See title page for details.

S 215-312-002
(15) Make sure the EICAS message, R FUEL SYS PRESS, does not show on the top display.

S 015-173-002
(16) Get access to the pressure switch of the right jettison pump through the wheel well of the right main landing gear.

S 025-320-002

WARNING: MAKE SURE EACH ELECTRICAL CONNECTOR HAS A TAG TO IDENTIFY THE CORRECT INSTALLATION OF THE JETTISON PUMP. CROSS-CONNECTION OF THE ELECTRICAL CONNECTORS CAN CAUSE THE AIRPLANE SYSTEM TO MALFUNCTION AND THE LOSS OF SAFE FLIGHT.

(17) Disconnect the electrical connector (D12194) on the pressure switch of the right jettison pump.

S 215-175-002
(18) Do these checks:
(a) Make sure the EICAS message, R FUEL JET PUMP, does not show on the top display.
(b) Make sure the fuel jettison FAULT light goes off.

S 425-322-002

WARNING: MAKE SURE EACH ELECTRICAL CONNECTOR HAS A TAG TO IDENTIFY THE CORRECT INSTALLATION OF THE JETTISON PUMP. CROSS-CONNECTION OF THE ELECTRICAL CONNECTORS CAN CAUSE THE AIRPLANE SYSTEM TO MALFUNCTION AND THE LOSS OF SAFE FLIGHT.

(19) Connect the electrical connector (D12192) to the pressure switch of the left fuel jettison pump.

S 715-177-002
(20) After 10 seconds, do these steps:
(a) Make sure the EICAS message, L FUEL JET PUMP, shows on the top display.
(b) Make sure the fuel jettison FAULT light comes on.

BOEING PROPRIETARY - Copyright (C) - Unpublished Work - See title page for details.

S 425-323-002

WARNING: MAKE SURE EACH ELECTRICAL CONNECTOR HAS A TAG TO IDENTIFY THE CORRECT INSTALLATION LOCATION TO THE OVERRIDE PUMP. CROSS-CONNECTION OF THE ELECTRICAL CONNECTORS CAN CAUSE THE AIRPLANE SYSTEM TO MALFUNCTION AND THE LOSS OF SAFE FLIGHT.

(21) Connect the electrical connectors to the pressure switches of the left and right override pumps.

S 215-179-002

(22) After 10 seconds, make sure the EICAS messages, L FUEL SYS PRESS AND R FUEL SYS PRESS, show on the top display.

S 425-324-002

WARNING: MAKE SURE EACH ELECTRICAL CONNECTOR HAS A TAG TO IDENTIFY THE CORRECT INSTALLATION OF THE JETTISON PUMP. CROSS-CONNECTION OF THE ELECTRICAL CONNECTORS CAN CAUSE THE AIRPLANE SYSTEM TO MALFUNCTION AND THE LOSS OF SAFE FLIGHT.

(23) Connect the electrical connector (D12194) to the pressure switch on the right jettison pump.

S 215-181-002

(24) After 10 seconds, do this check:
  (a) Make sure the EICAS messages, R FUEL JET PUMP, shows on the top display.

S 865-182-002

(25) Open these circuit breakers and attach a DO-NOT-CLOSE tag:
  (a) P11 Overhead Circuit Breaker Panel
    1) 11M13, LEFT JETT CONT
    2) 11M22, RIGHT JETT CONT

BOEING PROPRIETARY - Copyright (C) - Unpublished Work - See title page for details.

S 215-183-002
(26) Make sure the EICAS messages, R FUEL JET PUMP and L FUEL JET PUMP, do not show on the top display.

S 865-184-002
(27) Turn the fuel jettison switch to the OFF position.

K. Test of the Left Override/Jettison Pump

S 865-200-002
(1) Remove the DO-NOT-CLOSE tags and close these circuit breakers:
(a) P11 Overhead Circuit Breaker Panel
1) 11M13, LEFT JETT CONT
2) 11M15, FUEL PUMPS L

S 865-201-002
(2) Remove the DO-NOT-CLOSE tag and close this circuit breaker:
(a) P36 Left Miscellaneous Equipment Panel
1) 36F4 or 36G7, L FUEL JETT PUMP

S 865-207-002
(3) Remove the DO-NOT-CLOSE tag and close this circuit breaker:
(a) On the main power distribution panel, P6:
1) 6F15, L FUEL OVRD PUMP

S 785-300-002
(4) OVERRIDE/JETTISON PUMPS WITH A DIFFUSER INSTALLED (PN S343T002-5,-8,-12,-15);
Do this step:

WARNING: DO NOT OPERATE THE OVERRIDE AND JETTISON PUMPS IF THE FUEL QUANTITY IN THE AUXILIARY TANK IS BELOW 1000 POUNDS (453 KILOGRAMS). DRY FUEL PUMP OPERATION MAY CAUSE FUEL VAPORS IN THE TANK TO IGNITE DUE TO THE GENERATION OF SPARKS CAUSED BY METAL TO METAL CONTACT WITHIN THE FUEL PUMPS.

(a) Make sure there is a minimum fuel quantity of 1000 pounds (453 kilograms) in the auxiliary tank.

BOEING PROPRIETARY - Copyright (C) - Unpublished Work - See title page for details.

S 865-315-002

WARNING: DO NOT OPERATE A FUEL PUMP IF THE LOW PRESSURE LIGHT COMES ON AND STAYS ON. FUEL VAPORS IN THE TANK MAY IGNITE AND CAUSE A FIRE OR EXPLOSION.

(5) To operate any of the fuel pumps, you must be in the flight compartment to continuously monitor the fuel quantity and the low pressure indication in the fuel tank.
   (a) Immediately set the applicable fuel pump switch to OFF if the LOW PRESSURE light comes on and stays on.

S 715-208-002
(6) Turn the fuel jettison switch on the fuel jettison control panel to the ON position.

S 865-299-002
(7) Listen at the left access cover, 531AB, to make sure the left override and jettison pumps operate (AMM 06-44-00/201).

S 865-210-002
(8) Open this circuit breaker and attach a DO-NOT-CLOSE tag:
   (a) On the overhead circuit breaker panel, P11:
      1) 11M13, LEFT JETT CONT

S 285-211-002
(9) Listen to make sure the left override and jettison pumps stop.

S 865-212-002
(10) Remove the DO-NOT-CLOSE tag and close this circuit breaker:
   (a) On the overhead panel circuit breaker panel, P11:
      1) 11M13, LEFT JETT CONT

S 285-213-002
(11) Listen to make sure the left override and jettison pumps operate.

BOEING PROPRIETARY - Copyright (C) - Unpublished Work - See title page for details.

S 865-218-002
(12) Open this circuit breaker and attach DO-NOT-CLOSE tags:
(a) P6 Main Power Distribution Panel
1) 6F15, L FUEL OVRD PUMP
(b) P11 Overhead Circuit Breaker Panel
1) 11M15, FUEL PUMPS L

S 285-220-002
(13) Listen to make sure that the left override pump stops.

S 865-216-002
(14) Open this circuit breaker and attach DO-NOT-CLOSE tags:
(a) P36 Left Miscellaneous Equipment Panel
1) 36F4 or 36G7, L FUEL JETT PUMP

S 285-217-002
(15) Listen to make sure that the left jettison pump stops.

S 865-221-002
(16) Turn the fuel jettison switch to the OFF position.

S 865-222-002
(17) Open this circuit breaker and attach DO-NOT-CLOSE tags:
(a) P11 Overhead Circuit Breaker Panel
1) 11M13, LEFT JETT CONT

L. Test of the Right Override/Jettison Pump

S 865-237-002
(1) Remove the DO-NOT-CLOSE tags and close these circuit breakers:
(a) P11 Overhead Circuit Breaker Panel
1) 11M22, RIGHT JETT CONT
2) 11M24, FUEL PUMPS R
(b) P37 Right Miscellaneous Electrical Equipment Panel
1) 37F4 or 37G4, R FUEL JETT PUMP

S 865-244-002
(2) Remove the DO-NOT-CLOSE tag and close this circuit breaker:
(a) On the main power distribution panel, P6
1) 6F21, R FUEL OVRD PUMP

S 785-301-002
(3) OVERRIDE/JETTISON PUMPS WITH A DIFFUSER INSTALLED
(PN S343T002-5,-8,-12,-15);
Do this step:

BOEING PROPRIETARY - Copyright (C) - Unpublished Work - See title page for details.

WARNING: DO NOT OPERATE THE OVERRIDE AND JETTISON PUMPS IF THE FUEL QUANTITY IN THE AUXILIARY TANK IS BELOW 1000 POUNDS (453 KILOGRAMS). DRY FUEL PUMP OPERATION MAY CAUSE FUEL VAPORS IN THE TANK TO IGNITE DUE TO THE GENERATION OF SPARKS CAUSED BY METAL TO METAL CONTACT WITHIN THE FUEL PUMPS.

(a) Make sure there is a minimum fuel quantity of 1000 pounds (453 kilograms) in the auxiliary tank.

S 865-316-002

WARNING: DO NOT OPERATE A FUEL PUMP IF THE LOW PRESSURE LIGHT COMES ON AND STAYS ON. FUEL VAPORS IN THE TANK MAY IGNITE AND CAUSE A FIRE OR EXPLOSION.

(4) To operate any of the fuel pumps, you must be in the flight compartment to continuously monitor the fuel quantity and the low pressure indication in the fuel tank.
(a) Immediately set the applicable fuel pump switch to OFF if the LOW PRESSURE light comes on and stays on.

S 715-298-002
(5) Turn the fuel jettison switch on the fuel jettison control panel to the ON position.

S 285-246-002
(6) Listen at the right access cover, 631AB, to make sure the right override and jettison pumps operate (AMM 06-44-00/201).

S 865-247-002
(7) Open this circuit breaker on the P11 panel:
(a) On the overhead circuit breaker panel, P11:
1) 11M22, RIGHT JETT CONT

S 285-248-002
(8) Listen to make sure the right override and jettison pumps stop.

S 865-249-002
(9) Remove the DO-NOT-CLOSE tag and close this circuit breaker:
(a) On the overhead circuit breaker panel, P11:
(b) 11M22, RIGHT JETT CONT

S 295-250-002
(10) Listen to make sure the right override and jettison pumps operate.

S 865-251-002
(11) Open these circuit breakers and attach DO-NOT-CLOSE tags:
(a) P6 Main Power Distribution Panel
1) 6F21, R FUEL OVRD PUMP

BOEING PROPRIETARY - Copyright (C) - Unpublished Work - See title page for details.

(b) P11 Overhead Circuit Breaker Panel
1) 11M24, FUEL PUMPS R

S 285-253-002
(12) Listen to make sure the right override pump stops.

S 865-254-002
(13) Open this circuit breaker and attach a DO-NOT-CLOSE tag:
(a) P37 Right Miscellaneous Electrical Equipment Panel
1) 37F4 or 37G4, R FUEL JETT PUMP

S 285-255-002
(14) Listen to make sure the right jettison pump stops.

S 865-256-002
(15) Turn the fuel jettison switch to the OFF position.

S 865-257-002
(16) Open this circuit breaker and attach a DO-NOT-CLOSE tag:
(a) P11 Overhead Circuit Breaker Panel
1) 11M22, RIGHT JETT CONT

M. Put the Airplane Back to Its Usual Condition

S 865-290-002
(1) Make sure these circuit breakers are closed with DO-NOT-CLOSE tags removed:
(a) P6 Main Power Distribution Panel
1) 6F15, L FUEL OVRD PUMP
2) 6F21, R FUEL OVRD PUMP
(b) P11 Overhead CIrcuit Breaker Panel
1) 11M13, LEFT JETT CONT
2) 11M22 RIGHT JETT CONT
3) 11M14, LEFT JETT NOZZLE VALVE
4) 11M15 FUEL PUMPS L
5) 11M23, RIGHT JETT NOZZLE VALVE
6) 11M24 FUEL PUMPS R
(c) P36 Left Miscellaneous Electrical Equipment Panel
1) 36F4 or 36G7, L FUEL JETT PUMP
(d) P37 Right Miscellaneous Electrical Equipment Panel
1) 37F4 or 37G4, R FUEL JETT PUMP

S 095-258-002

WARNING: USE THE PROCEDURE IN AMM 32-00-15/201 TO REMOVE THE DOOR LOCKS. THE DOORS OPEN AND CLOSE QUICKLY AND CAN CAUSE INJURY TO PERSONS OR DAMAGE TO EQUIPMENT.

(2) Remove the door locks from the landing gear doors and close the doors (AMM 32-00-15/201).

BOEING PROPRIETARY - Copyright (C) - Unpublished Work - See title page for details.

S 865-259-002

WARNING: DO THE ACTIVATION PROCEDURE FOR THE TRAILING EDGE FLAPS. ACCIDENTAL OPERATION OF THE TRAILING EDGE FLAPS COULD CAUSE INJURY TO PERSONS.

(3) Do the activation procedure for the trailing edge flaps (AMM 27-51-00/201).

S 865-260-002

(4) Remove the DO-NOT-OPERATE tag from the speedbrake lever.

S 865-261-002

(5) Remove electrical power from the airplane if it is not necessary (AMM 24-22-00/201).

TASK 28-31-00-765-271-002

3. Phase Check of the Jettison Pump Wiring

A. General

(1) This is a check to make sure the three phase power to the jettison pumps is connected correctly. This check can be used for troubleshooting of wiring problems. It is not necessary to do this test each time the fuel jettison pump is replaced.

B. Equipment

(1) Indicator - Phase Sequence, to monitor the phase sequence of three-phase power. Model K6, Knopp, Inc., 1307 66th Street, Oakland, CA 94608, U.S.A. or equivalent.

C. References

(1) AMM 24-22-00/201, Electrical Power - Control

(2) WDM 28-31-21, Fuel Jettison Pumps

D. Access

(1) Location Zones

531 Center Auxilary Tank (Left)
631 Center Auxiliary Tank (Right)

(2) Access Panels

531AB Access Cover (Left)
631AB Access Cover (Right)

E. Procedure

S 865-262-002

(1) Supply electrical power to the airplane (AMM 24-22-00/201).

S 215-265-002

(2) Make sure the fuel jettison switch on the overhead panel, P5, is in the OFF position.

BOEING PROPRIETARY - Copyright (C) - Unpublished Work - See title page for details.

S 035-272-002
(3) To do a phase check of the left jettison pump, disconnect the electrical connector (D12188) at the housing of the left override/jettison pump (WDM 28-31-21).

S 035-273-002
(4) To do a phase check of the right jettison pump, disconnect the electrical connector (D12190) at the right override/jettison pump housing (WDM 28-31-21).

S 485-274-002
(5) Install a phase sequence indicator on the connector for the left or the right jettison pump in the subsequent sequence:

Pin 2 - Phase A
Pin 4 - Phase B
Pin 6 - Phase C

S 865-275-002
(6) Set the fuel jettison switch to the ON position.

S 765-276-002
(7) Make sure the phase sequence is A, B, C.

S 865-277-002
(8) Set the fuel jettison switch to the OFF position.

S 085-278-002
(9) Disconnect the phase rotation indicator from the left or the right jettison pump.

S 435-279-002
(10) For the left jettison pump, connect the electrical connector D12188 to the left jettison pump again.

S 435-280-002
(11) For the right jettison pump, connect the electrical connector D12190 to the right jettison pump again.

S 865-281-002
(12) Remove electrical power from the airplane if it is not necessary for other tasks (AMM 24-22-00/201).

BOEING PROPRIETARY - Copyright (C) - Unpublished Work - See title page for details.

JETTISON PUMP - REMOVAL/INSTALLATION

1. General
   A. The override/jettison pump contains a housing, an override pump, a jettison pump, a discharge check valve, a motive flow and screen valve, a mounting ring and an access cover (View A, Fig. 402).
   B. The housings of the override/jettison pumps are installed in the left and right auxiliary fuel tanks. The jettison pump is found in the housing of the override/jettison pump.
   C. To remove the housing, override pump, discharge check valve, motive flow and screen valve, motive flow screen or shutoff sleeve of the override/jettison pump, refer to AMM 28-22-05/401.
   D. This procedure contains two tasks. The first task removes the jettison pump. The second task installs the jettison pump.

TASK 28-31-01-004-002

2. Remove the Jettison Pump
   A. Equipment
      (1) Container: for use with jet fuel, 1 gallon capacity, commercially available
   B. Access
      (1) Location Zones
          531 Center Auxiliary Tank (Left)
          631 Center Auxiliary Tank (Right)

      (2) Access Panels
          531AB Access Cover (Left)
          631AB Access Cover (Right)

   C. Procedure

      S 864-001
      (1) To remove the left jettison pump, open this circuit breaker on the overhead circuit breaker panel, P11, and attach DO-NOT-CLOSE tag:
          (a) 11M13, L FUEL JTSN CONT

BOEING PROPRIETARY - Copyright (C) - Unpublished Work - See title page for details.

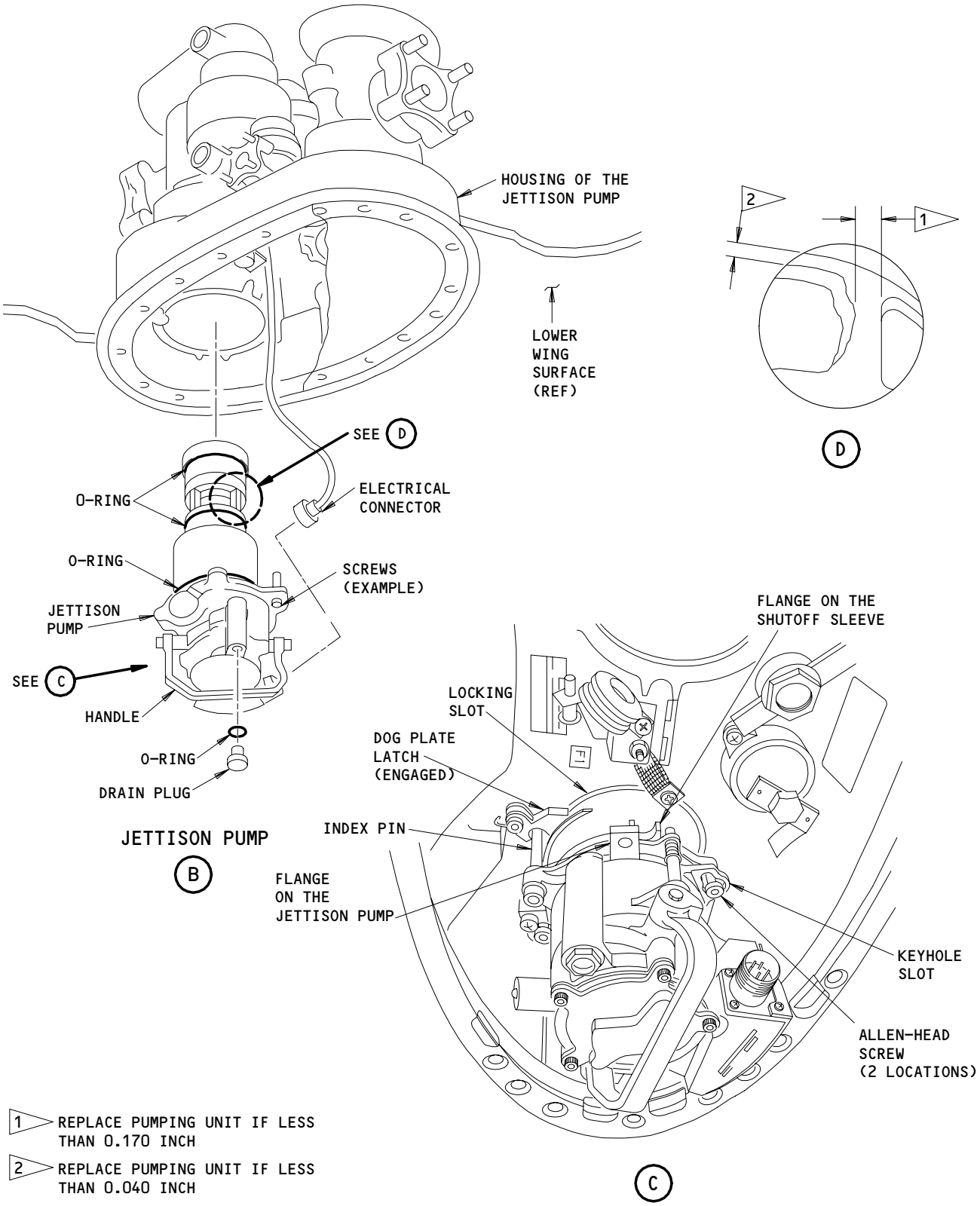

Jettison Pump Access
Figure 401

BOEING PROPRIETARY - Copyright (C) - Unpublished Work - See title page for details.

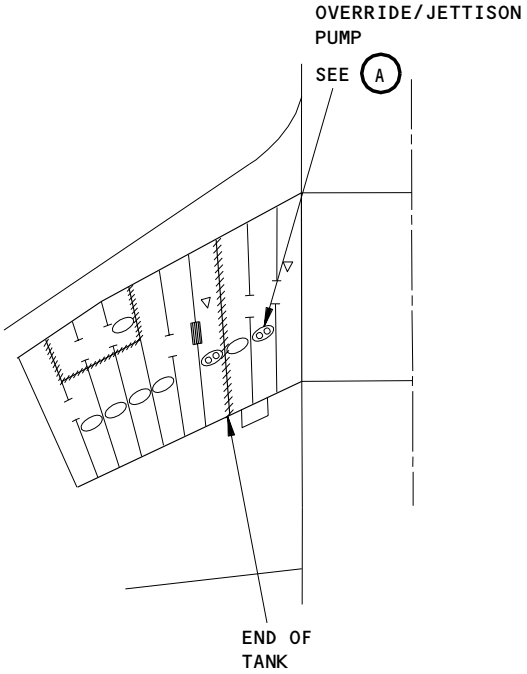

LEFT WING SHOWN
(RIGHT WING OPPOSITE)

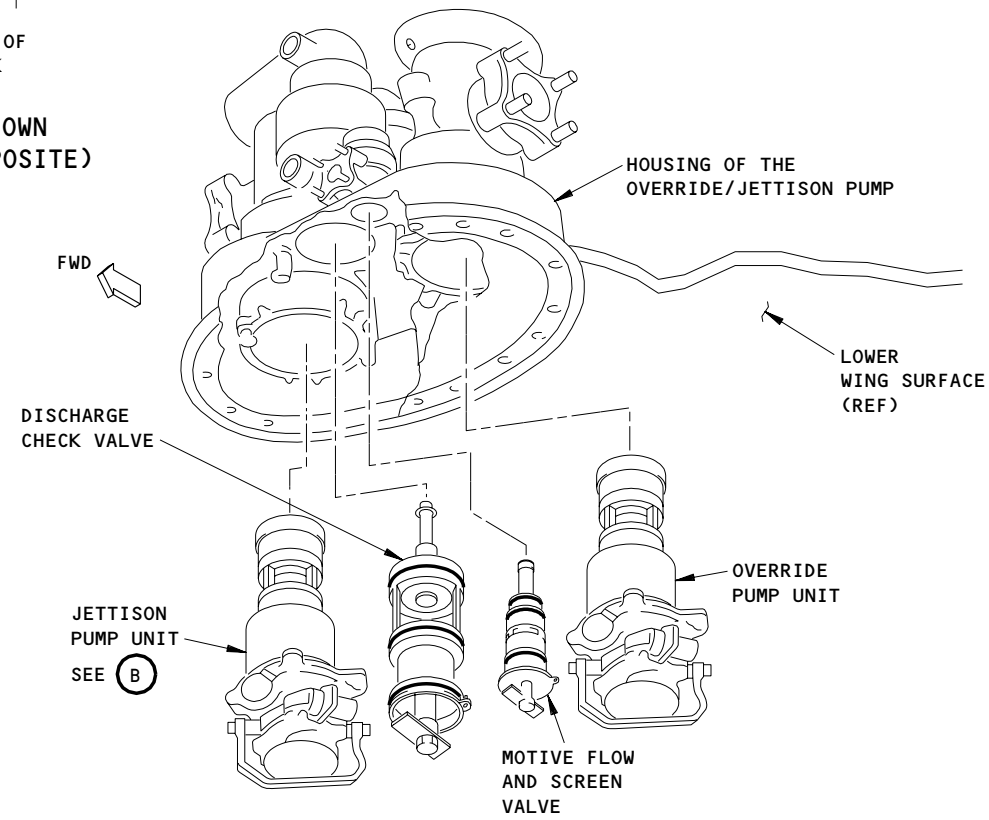

OVERRIDE/JETTISON PUMP

A

Jettison Pump Installation
Figure 402 (Sheet 1)

BOEING PROPRIETARY - Copyright (C) - Unpublished Work - See title page for details.

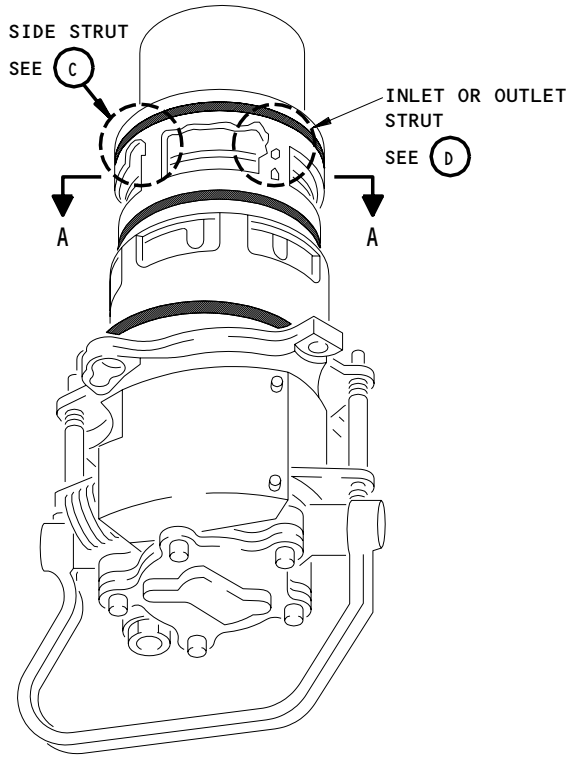

JETTISON PUMP UNIT

B

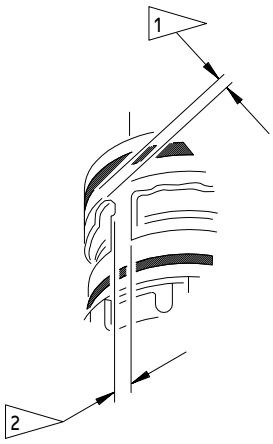

SIDE STRUT

C

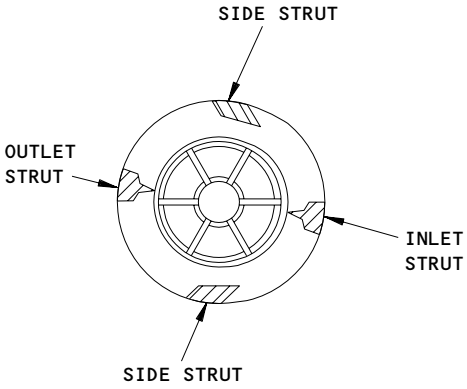

A-A

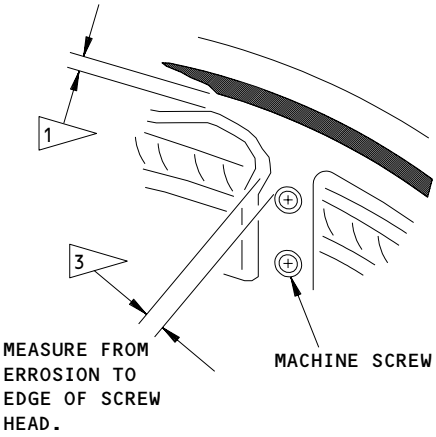

INLET OR OUTLET STRUT

D

1 REPLACE THE PUMP IF LESS THAN 0.04 INCH. (ALL STRUTS)

2 REPLACE THE PUMP IF LESS THAN 0.170 INCH. (SIDE STRUTS)

3 REPLACE THE PUMP IF LESS THAN 0.04 INCH. (INLET AND OUTLET STRUTS)

Jettison Pump Installation
Figure 402 (Sheet 2)

BOEING PROPRIETARY - Copyright (C) - Unpublished Work - See title page for details.

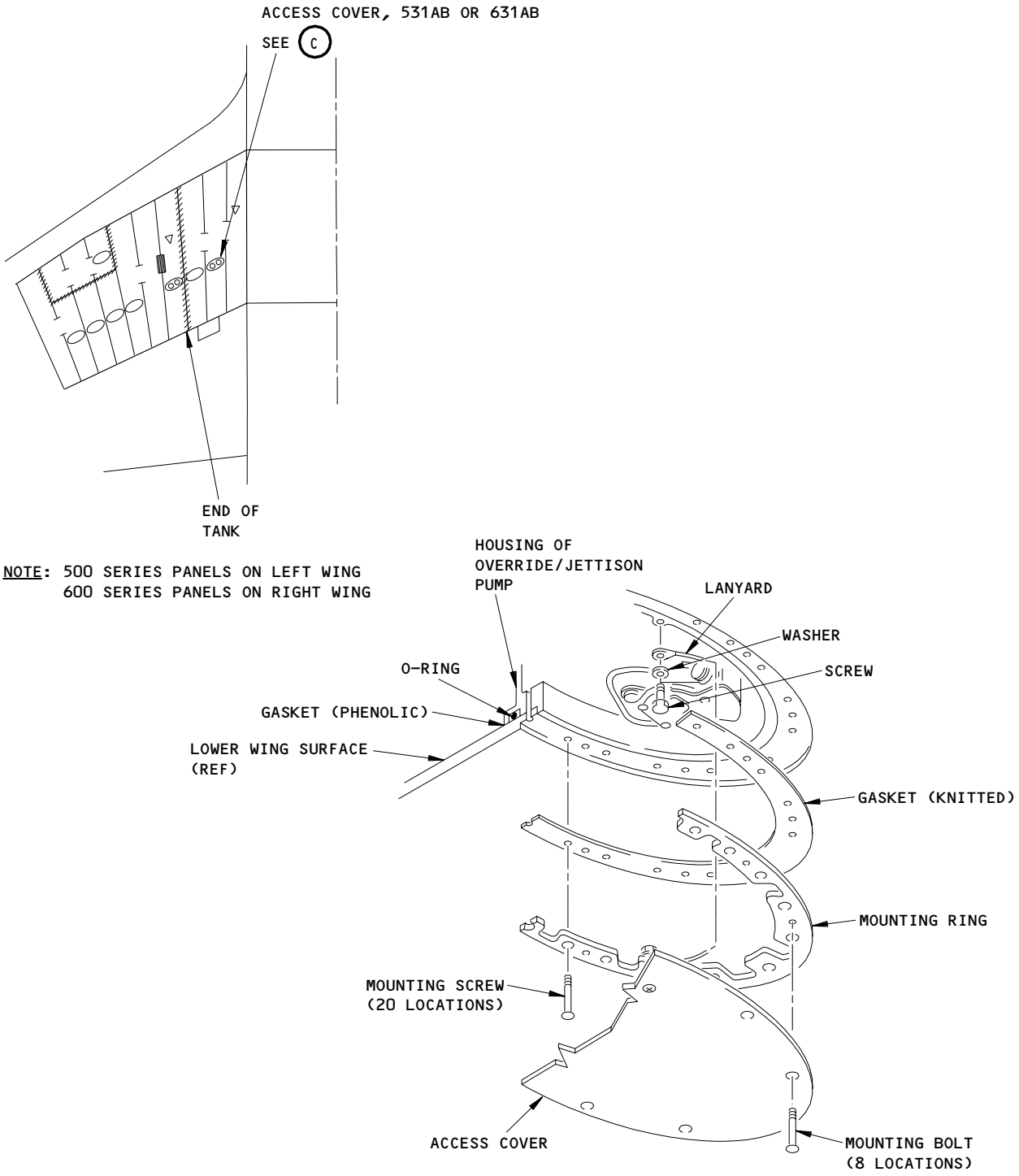

ACCESS COVER, 531AB OR 631AB

C

Jettison Pump Installation
Figure 402 (Sheet 3)

BOEING PROPRIETARY - Copyright (C) - Unpublished Work - See title page for details.

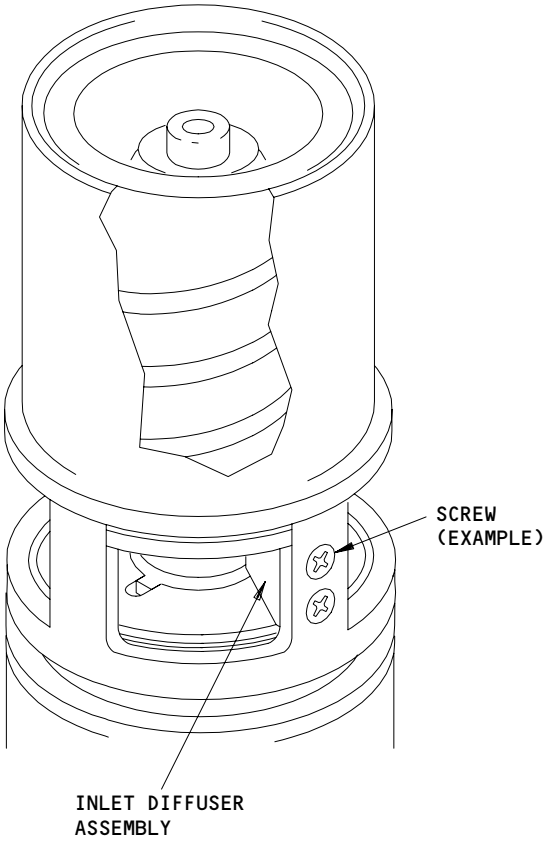

Inlet Diffuser Assembly
Figure 403

BOEING PROPRIETARY - Copyright (C) - Unpublished Work - See title page for details.

S 864-125
(2) SAS 150, 152-154 POST-SB 28-27;
SAS 050, 051, 162-164 POST-SB 28-25;
SAS 155-157, 165-167 POST-SB 28-38;
SAS 168-999;
MTH 275 POST-SB 28-27;
MTH 277, 278, 280 POST-SB 28-38;
MTH 281-999;
To remove the left jettison pump, open this circuit breaker on the left miscellaneous electrical equipment panel, P36, and attach a DO-NOT-CLOSE tag:
(a) 36F4 or 36G7, L FUEL JETT PUMP

S 864-013
(3) To remove the right jettison pump, open this circuit breaker on the overhead circuit breaker panel, P11, and attach DO-NOT-CLOSE tag:
(a) 11M22, R FUEL JTSN CONT

S 864-128
(4) SAS 150, 152-154 POST-SB 28-27;
SAS 050, 051, 162-164 POST-SB 28-25;
SAS 155-157, 165-167 POST-SB 28-38;
SAS 168-999;
MTH 275 POST-SB 28-27;
MTH 277, 278, 280 POST-SB 28-38;
MTH 281-999;
To remove the right jettison pump, open this circuit breaker on the right miscellaneous electrical equipment panel, P37, and attach DO-NOT-CLOSE tag:
(a) 37F4 or 37G4, R FUEL JETT PUMP

S 014-011
(5) Hold the access cover and remove the mounting bolts (Fig. 402).

S 014-010
(6) Lower the access cover until the lanyard holds the access cover.

BOEING PROPRIETARY - Copyright (C) - Unpublished Work - See title page for details.

S 034-009
(7) Disconnect the electrical connector from the jettison pump (View B, Fig. 401).

S 034-008
(8) Loosen the drain plug but do not remove.

S 034-007
(9) Remove the screw that holds the bonding jumper to the jettison pump.

NOTE: The screw is attached to the bonding jumper.

S 034-006
(10) Remove the other screws that attach to the jettison pump.

S 034-005

WARNING: DO NOT TURN THE JETTISON PUMP. FUEL LEAKAGE CAN OCCUR IF YOU TURN THE JETTISON PUMP WITHOUT THE SHUTOFF SLEEVE ATTACHED.

(11) Turn the handle on the jettison pump down 90 degrees.

S 024-004
(12) Use the handle and pull the jettison pump and shutoff sleeve down until the valve stop stops the movement (approximately 1.5 inches).

NOTE: The last 1/4 inch of movement can require increased force.

S 214-017
(13) Make sure the locking slot and the dog plate latch align (View C, Fig. 401).

S 034-016

CAUTION: DO NOT LET THE JETTISON PUMP TURN WHEN YOU REMOVE THE DRAIN PLUG. IF THE JETTISON PUMP TURNS, DAMAGE TO THE JETTISON PUMP AND DRAIN PLUG CAN OCCUR.

CAUTION: MAKE SURE FUEL DOES NOT CONTINUOUSLY DRAIN. IF FUEL CONTINUOUSLY DRAINS, THE SHUTOFF SLEEVE IS NOT CLOSED AND YOU MUST PUSH THE JETTISON PUMP UP TO REINSTALL IT AND DEFUEL THE FUEL TANK.

(14) Hold the jettison pump and remove the drain plug and the O-ring from the jettison pump (View B, Fig. 401).

BOEING PROPRIETARY - Copyright (C) - Unpublished Work - See title page for details.

S 034-180

(15) If fuel continuously drains, do the steps that follow:
  (a) Install the jettison pump.
  (b) Defuel the auxiliary fuel tank (AMM 28-26-00/201).
  (c) Remove the jettison pump.

S 654-015

(16) Drain all fuel that remains in the jettison pump into a container.

S 214-014

WARNING: MAKE SURE THAT THE DOG PLATE LATCH ON THE HOUSING ALIGNS WITH THE LOCKING SLOT ON THE SHUTOFF SLEEVE. FUEL LEAKAGE CAN OCCUR IF YOU TURN THE JETTISON PUMP WITHOUT THE SHUTOFF SLEEVE ATTACHED.

(17) Make sure the dog latch plate and the locking slot align (View C, Fig. 401).

S 024-019

(18) Turn the jettison pump approximately 12 degrees counterclockwise until it stops. This releases the jettison pump from the shutoff sleeve.

S 024-018

(19) Make sure the dog plate latch on the jettison pump engages with the locking slot on the shutoff sleeve.
  (a) If the dog plate latch does not engage with the locking slot, do the steps that follow:
    1) Make sure the jettison pump and the flanges on the shutoff sleeve touch.
    2) Turn the jettison pump in the clockwise direction.
    3) Pull the jettison pump down until the dog plate latch and the locking slot align.

BOEING PROPRIETARY - Copyright (C) - Unpublished Work - See title page for details.

4) Turn the jettison pump approximately 12 degrees counterclockwise until it stops. This releases the jettison pump from the shutoff sleeve.
5) Make sure the dog plate latch on the jettison pump engages with the locking slot on the shutoff sleeve.

S 024-022
(20) Pull down on the handle and remove the jettison pump from the shutoff sleeve.

S 034-021
(21) Remove the O-rings on the jettison pump (View B, Fig. 401).

S 214-020
(22) Examine the struts on the jettison pump (Fig. 402).
(a) If one or more of the struts is less than the dimension shown, replace the jettison pump.

S 434-023
(23) Install the drain plug into the jettison pump if you do not install that jettison pump (View B, Fig. 401).

TASK 28-31-01-404-024
3. Install the Jettison Pump

A. Consumable Materials
(1) D00215 Grease-Fluorosilicone, DC FS-1292.
B. References
(1) AMM 20-10-21/601, Electrical Bonding
(2) AMM 24-22-00/201, Electrical Power - Control
(3) AMM 28-31-00/501, Fuel Jettison System
C. Access
(1) Location Zones
531 Center Auxiliary Tank (Left)
631 Center Auxiliary Tank (Right)

(2) Access Panels
531AB Access Cover (Left)
631AB Access Cover (Right)

D. Procedure

BOEING PROPRIETARY - Copyright (C) - Unpublished Work - See title page for details.

S 284-149

WARNING: DO NOT INSTALL THE PUMP IF THE DIFFUSER ASSEMBLY IS LOOSE. A LOOSE DIFFUSER CAN MAKE SPARKS DURING DRY OPERATION OF THE PUMP. AN EXPLOSION CAN OCCUR.

(1) Do these steps to do an inspection of the jettison pump (Fig. 403):
   (a) Apply hand pressure to the inlet diffuser blades to make sure the diffuser assembly is tightly installed.
   (b) Look at the screws and the diffuser assembly while you apply hand pressure to see if they move from their correct position.
   (c) If the diffuser or the screws move when you apply hand pressure, do not install the pump.

S 434-025

(2) If you install the jettison pump that was removed, do the steps that follow:
   (a) Install three new O-rings, lightly lubricated with fluorosilicone grease, DC FS-1292, on the jettison pump (View B, Fig. 401).
   (b) Install a new O-ring, lightly lubricated with fluorosilicone grease, DC FS-1292, on the drain plug.

S 434-026

(3) If the drain plug is not installed, do the steps that follow:
   (a) Install the drain plug on the jettison pump (View B, Fig. 401).
   (b) Tighten the drain plug to 30-40 pound-inches.
   (c) Install the lockwire on the drain plug.

S 644-029

(4) Lubricate the O-rings on the jettison pump with fluorosilicone grease, DC FS-1292.

   NOTE: The fluorosilicone grease makes installation of the jettison pump easier.

S 424-028

(5) Align the keyhole slot on the jettison pump with the Allen-head screws (View C, Fig. 401).

S 424-027

(6) Install the jettison pump in the shutoff sleeve.
   (a) Do not turn the jettison pump as you push up on it.
   (b) Push up on the jettison pump until the flanges of the jettison pump and the flanges of the shutoff sleeve touch.

S 214-030

(7) Make sure the Allen-head screws fit through the keyhole slots.

BOEING PROPRIETARY - Copyright (C) - Unpublished Work - See title page for details.

S 424-031
(8) Turn the jettison pump approximately 12 degrees clockwise.

S 434-032
(9) Put the handle on the jettison pump to its usual position.

S 424-033
(10) Push the jettison pump and shutoff sleeve up until the flange on the shutoff sleeve touches the housing.

S 434-034
(11) Install the screw that attaches to the bonding jumper on the jettison pump).

S 434-035
(12) Install the screws on the jettison pump.

S 434-036
(13) Tighten the screws to 48-53 pound-inches.

S 224-195
(14) Make sure the bonding resistance between the housing and the jettison pump is 0.00035 ohm (0.35 milliohm) or less (AMM 20-10-21/601).

NOTE: CDCCL - Refer to the task: Airworthiness Limitation Precautions (AMM 28-00-00/201), for important information on Critical Design Configuration Control Limitations (CDCCLs).

NOTE: This is applicable to Airworthiness Limitation 28-AWL-07.

S 434-038
(15) Connect the electrical connector to the jettison pump.

S 654-159
(16) Refuel the auxiliary fuel tank to a minimum of 21,700 lbs (9900 kgs) (AMM 12-11-01/301).

NOTE: This is the minimum fuel quantity necessary to make sure the seal surface for the override pump housing is covered and the override pumps are correctly primed.

You can refuel each fuel tank by pressure fueling (AMM 12-11-01/301) or by tank to tank transfer (AMM 28-26-00/201).

S 214-040
(17) Make sure there are no fuel leaks at the jettison pump.

BOEING PROPRIETARY - Copyright (C) - Unpublished Work - See title page for details.

S 414-039
(18) Put and hold the access cover against the lower wing surface (Fig. 402).
(a) Make sure the lanyard is in the pump housing.

S 414-042
(19) Install the mounting bolts on the access cover.

S 414-043
(20) Tighten the mounting bolts to 20-22 pound-inches.

S 864-044
(21) For the left jettison pump, remove the DO-NOT-CLOSE tag and close this circuit breaker on the P11 panel:
(a) 11M13, L FUEL JTSN CONT

S 864-129
(22) SAS 150, 152-154 POST-SB 28-27;
SAS 155-157, 165-167 POST-SB 28-25;
SAS 050, 051, 162-164 POST-SB 28-38;
SAS 168-999;
MTH 275 POST-SB 28-27;
MTH 277, 278, 280 POST-SB 28-38;
MTH 281-999;
For the left jettison pump, remove the DO-NOT-CLOSE tag and close this circuit breaker on the P36 panel:
(a) 36F4 or 36G7, L FUEL JETT PUMP

S 864-048
(23) For the right jettison pump, remove the DO-NOT-CLOSE tag and close this circuit breaker on the P11 panel:
(a) 11M22, R FUEL JTSN CONT

S 864-133
(24) SAS 150, 152-154 POST-SB 28-27;
SAS 050, 051, 162-164 POST-SB 28-25;
SAS 155-157, 165-167 POST-SB 28-38;
SAS 168-999;
MTH 275 POST-SB 28-27;
MTH 277, 278, 280 POST-SB 28-38;
MTH 281-999;
For the right jettison pump, remove the DO-NOT-CLOSE tag and close this circuit breaker on the P37 panel:
(a) 37F4 or 37G4, R FUEL JETT PUMP

BOEING PROPRIETARY - Copyright (C) - Unpublished Work - See title page for details.

S 714-134
(25) SAS 150, 152-154 POST-SB 28-27;
SAS 050, 051, 162-164 POST-SB 28-25;
SAS 155-157, 165-167 POST-SB 28-38;
SAS 168-999;
MTH 275 POST-SB 28-27;
MTH 277, 278, 280 POST-SB 28-38;
MTH 281-999;
Do the Test of the Left or Right Override/Jettison Pump procedure (AMM 28-31-00/501).

BOEING PROPRIETARY - Copyright (C) - Unpublished Work - See title page for details.

JETTISON PUMP - INSPECTION/CHECK

1. General
   A. This procedure contains a tasks to do an electrical bonding resistance check of the jettison pump.

TASK 28-31-01-706-134

2. Jettison Pump - Bonding Resistance Check (Fig. 601)
   A. Equipment
      (1) Bonding Meter - Use one of these:
         (a) Bonding Meter - T477W
             Avtron Manufacturing Co.
             Cleveland, OH
         (b) Bonding Meter - Model M1
             (Serial Number A000012 and subsequent)
             BCD Electronics Ltd.
             Vancouver, Canada
   B. Reference
      (1) SWPM 20-20-00, Electrical Bonding and Grounds
   C. Access
      (1) Location Zones
          531 Center Auxiliary Tank (Left)
          631 Center Auxiliary Tank (Right)

      (2) Access Panels
          531AB Access Cover (Left)
          631AB Access Cover (Right)

   D. Prepare for the Procedure

      S 016-135
      (1) Remove the applicable left or right tank access cover, 531AB or 631AB.
         (a) Hold the access cover and remove the mounting bolts.

             NOTE: It is not necessary to remove the mounting ring or the gasket.

         (b) Lower the access cover until the lanyard holds the access cover.

BOEING PROPRIETARY - Copyright (C) - Unpublished Work - See title page for details.

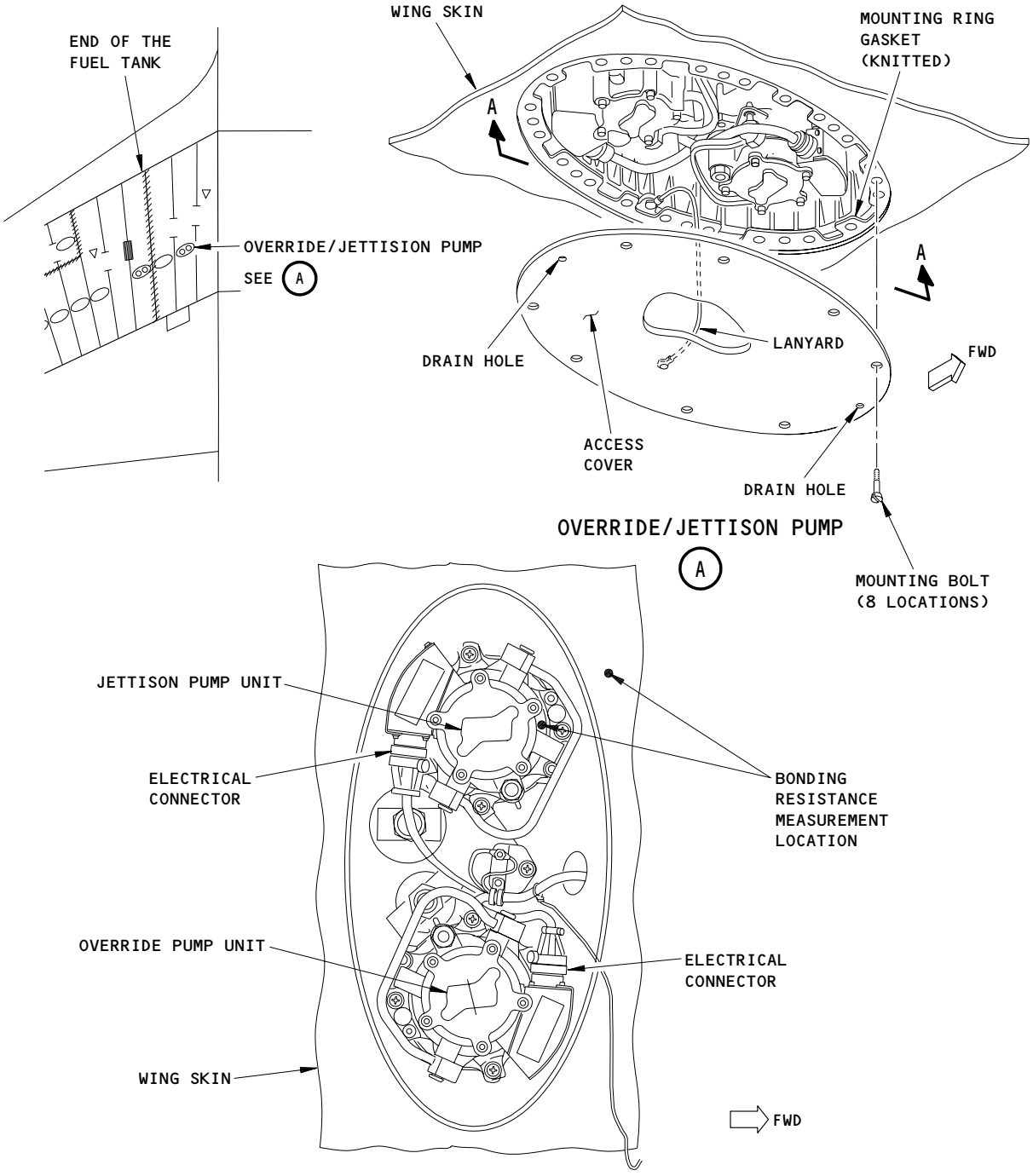

OVERRIDE/JETTISON PUMPS
A-A

Override/Jettison Pump Inspection
Figure 601

BOEING PROPRIETARY - Copyright (C) - Unpublished Work - See title page for details.

E. Bonding Resistance Check

S 766-136

(1) Measure the bonding resistance between the jettison pump and the wing structure (SWPM 20-20-00).
    (a) Make sure the resistance is 0.65 milliohms (0.00065 ohm) or less.

F. Put the Airplane Back to Its Usual Condition

S 416-137

(1) Install the applicable left or right tank access cover, 531AB or 631AB.
    (a) Put and hold the access cover against the lower wing surface.
        1) Make sure the lanyard is in the fuel tank.
    (b) Install the mounting bolts on the access cover.

BOEING PROPRIETARY - Copyright (C) - Unpublished Work - See title page for details.

FUEL JETTISON NOZZLE VALVE - REMOVAL/INSTALLATION

1. General
   A. There are two nozzle valves for the fuel jettison system. Each nozzle valve has three parts: the actuator, the adapter shaft, and the valve body. The actuator is installed on the rear spar out of the main fuel tank. The adapter shaft and the valve body are installed on the rear spar in the main fuel tank. The adapter shaft and valve body are found inboard of rib 28 and attach to the fuel jettison manifold.
   B. You must defuel the fuel tank before you remove the valve body or the adapter shaft.
   C. This procedure contains five tasks. The first task removes the valve body of the nozzle valve. The second task installs the valve body of the nozzle valve. The third task removes the adapter shaft of the nozzle valve. The fourth task installs the adapter shaft of the nozzle valve. The fifth task aligns the adapter shaft of the fuel jettison nozzle valve.
   D. The procedure to remove and install the actuator of the nozzle valve is in 28-31-05.

TASK 28-31-03-004-001

2. Remove the Valve Body of the Nozzle Valve (Fig. 401)
   A. References
      (1) AMM 27-51-00/201, Flight Controls
      (2) AMM 28-11-00/201, Fuel Tanks (Purging and Entry)
      (3) AMM 28-11-01/401, Main Tank Access Door
      (4) AMM 28-26-00/201, Defueling
   B. Access
      (1) Location Zones
          541 Main Tank - Outboard of Rib No. 10 (Left)
          641 Main Tank - Outboard of Rib No. 10 (Right)

      (2) Access Panels
          541UB Main Tank Access Door (Left)
          641UB Main Tank Access Door (Right)

   C. Procedure

      S 864-016
      (1) Open these circuit breakers on the overhead circuit breaker panel, P11, and attach DO-NOT-CLOSE tags:
          (a) 11M14, LEFT JETT NOZZLE VALVE
          (b) 11M23, RIGHT JETT NOZZLE VALVE

BOEING PROPRIETARY - Copyright (C) - Unpublished Work - See title page for details.

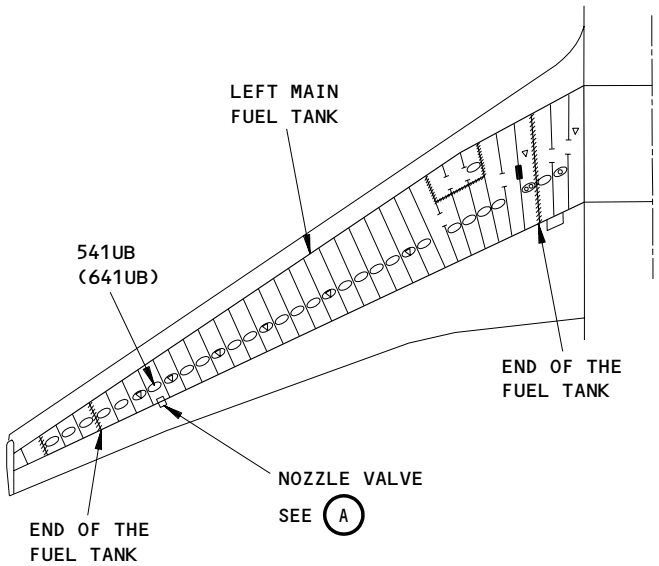

LEFT WING
(RIGHT WING IS OPPOSITE)

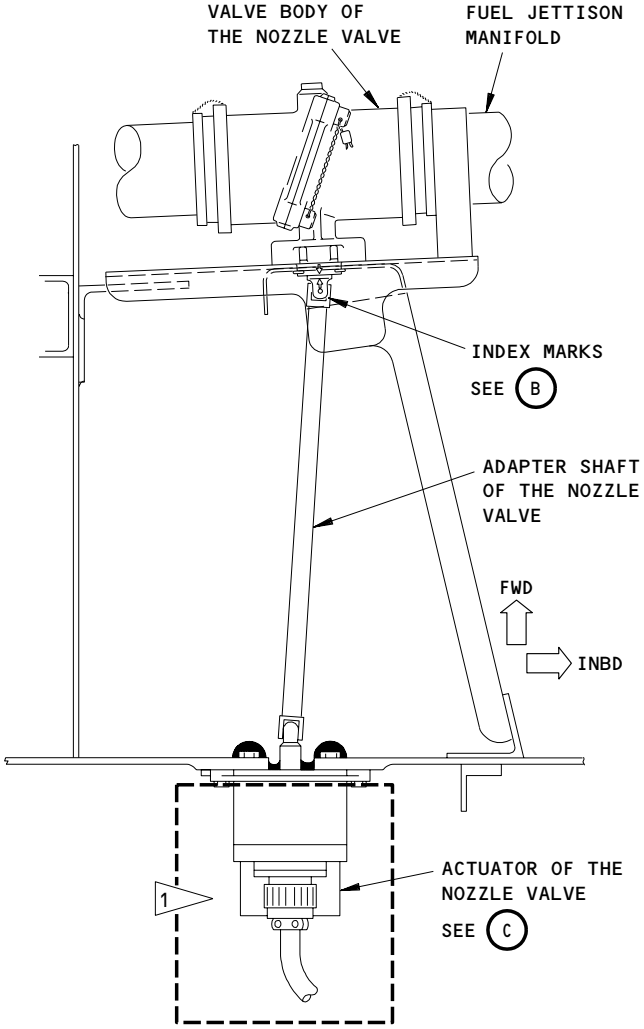

NOZZLE VALVE
A

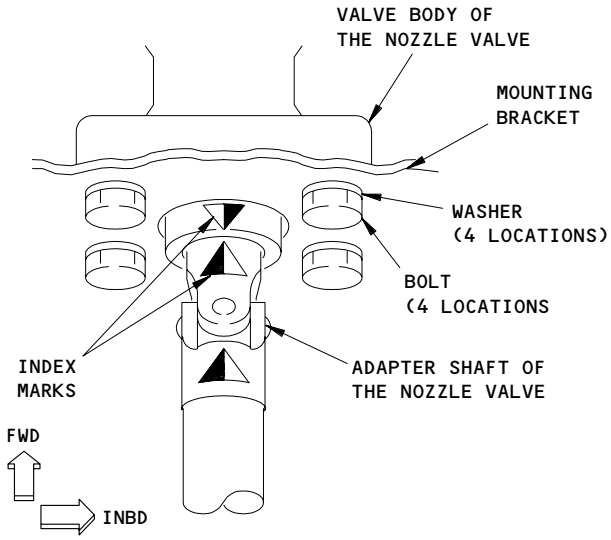

INDEX MARKS
B

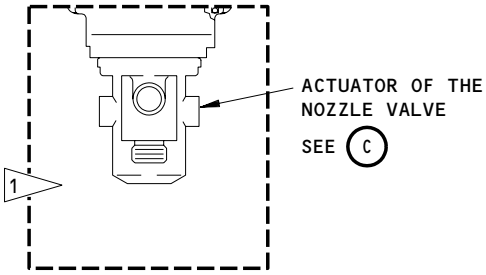

NOZZLE VALVE
A

NOTE: 500 SERIES PANELS ON LEFT WING
600 SERIES PANELS ON RIGHT WING

1 ALTERNATE

Fuel Jettison Nozzle Valve
Figure 401 (Sheet 1)

BOEING PROPRIETARY - Copyright (C) - Unpublished Work - See title page for details.

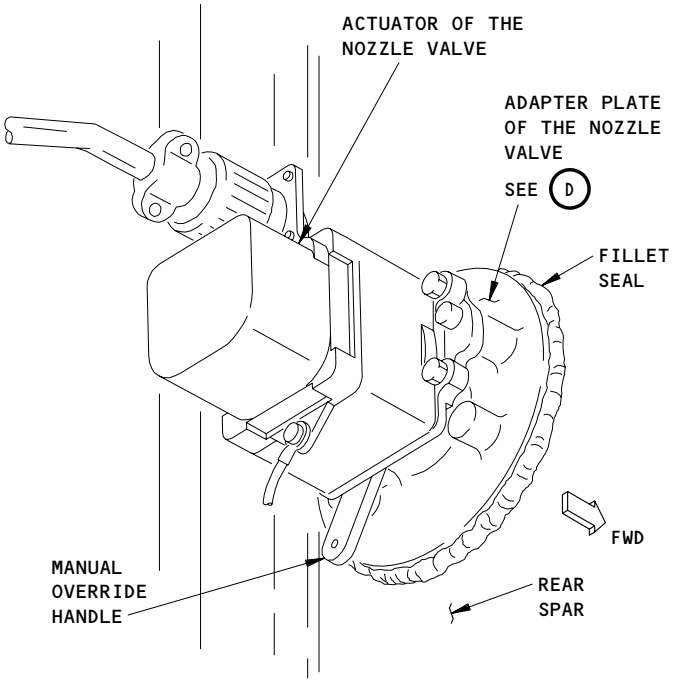

ACTUATOR OF THE TRANSFER VALVE

C 1

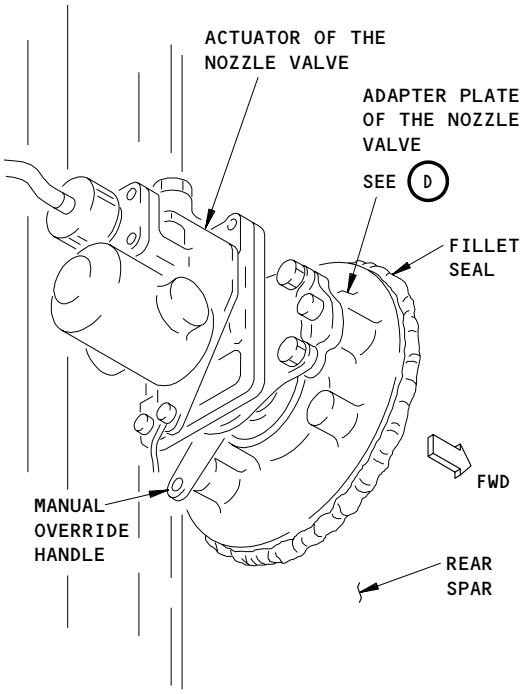

ACTUATOR OF THE NOZZLE VALVE

C 1

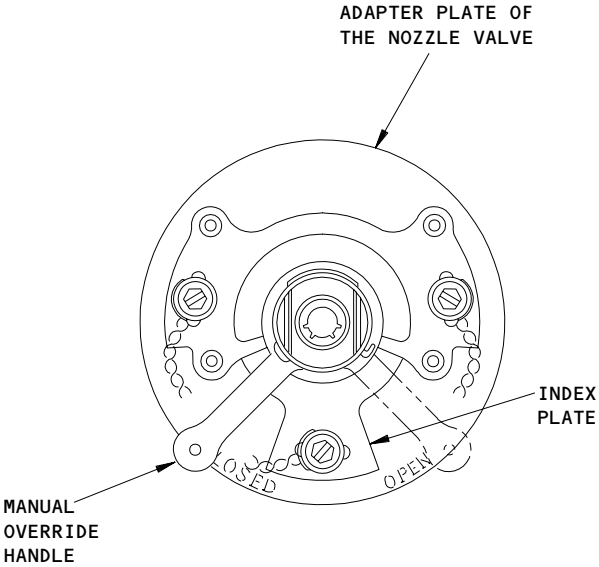

ADAPTER PLATE OF THE NOZZLE VALVE
(VIEW IN THE FORWARD DIRECTION)

D

1 ALTERNATE

Fuel Jettison Nozzle Valve
Figure 401 (Sheet 2)

BOEING PROPRIETARY - Copyright (C) - Unpublished Work - See title page for details.

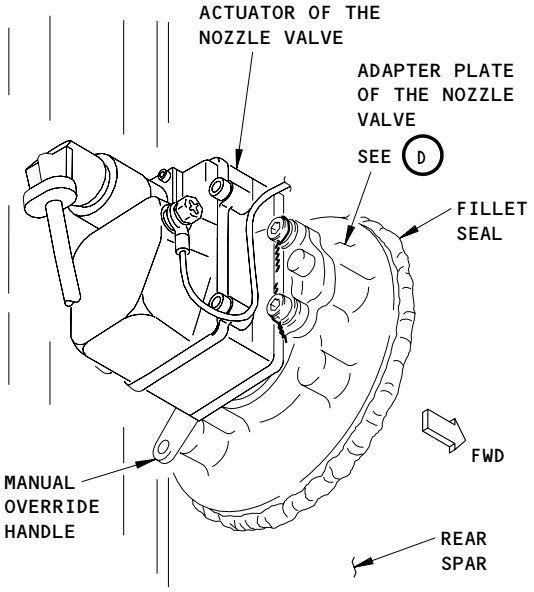

ACTUATOR OF THE TRANSFER VALVE

C

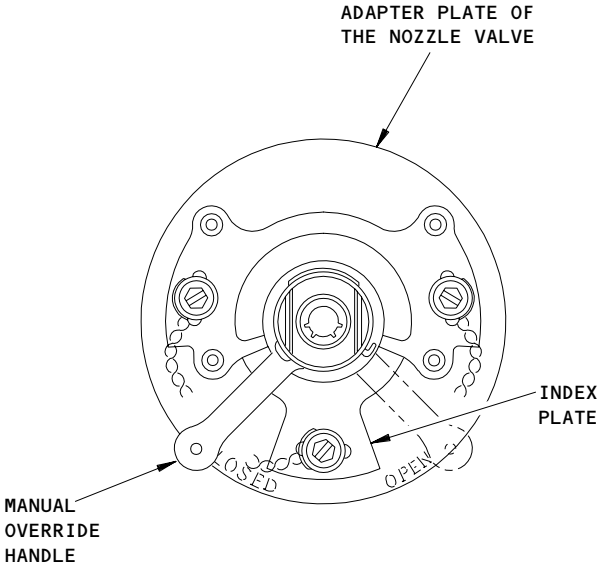

ADAPTER PLATE OF THE NOZZLE VALVE

D

Fuel Jettison Nozzle Valve
Figure 401 (Sheet 3)

BOEING PROPRIETARY - Copyright (C) - Unpublished Work - See title page for details.

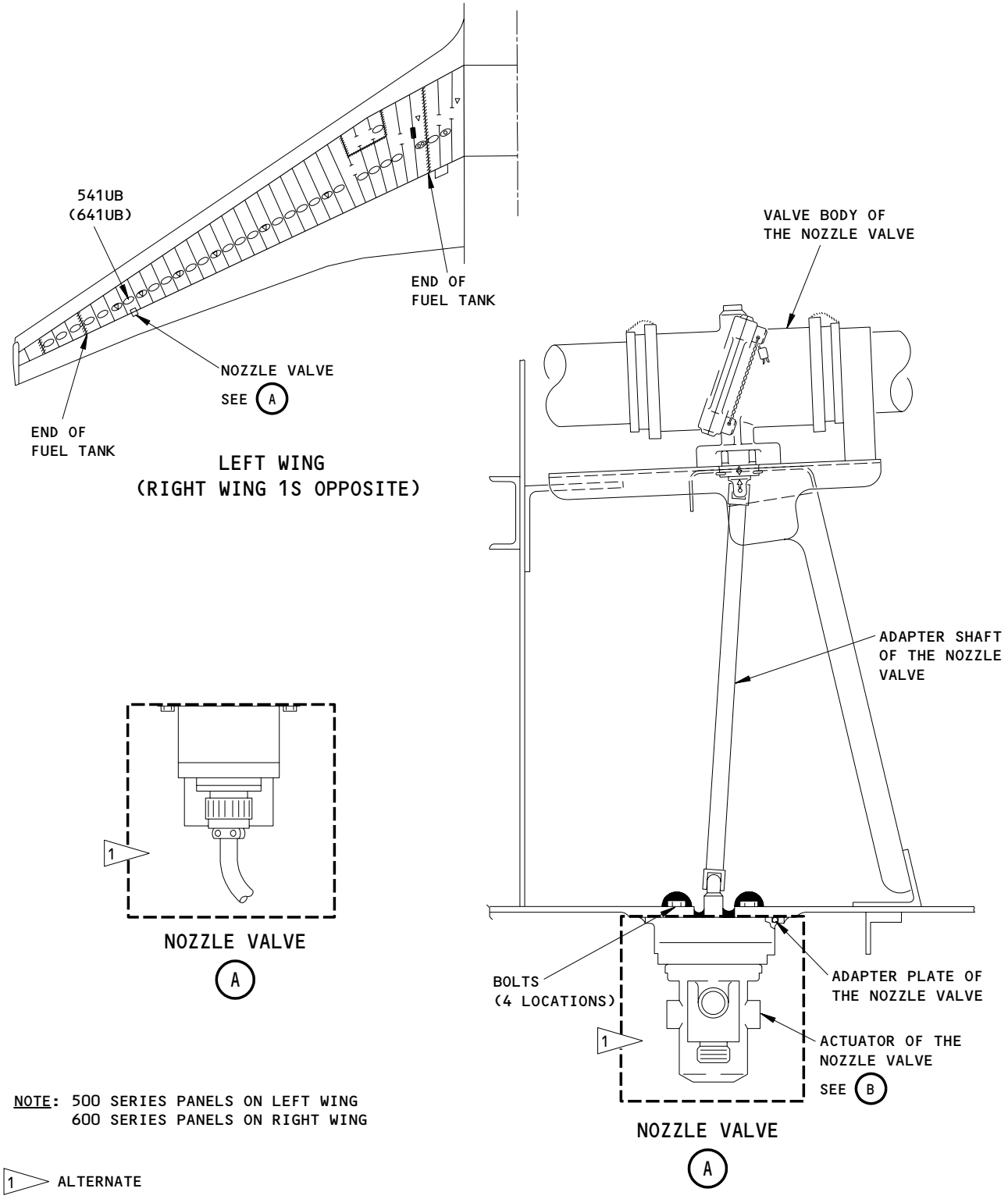

Fuel Jettison Nozzle Valve Adapter Shaft
Figure 402 (Sheet 1)

BOEING PROPRIETARY - Copyright (C) - Unpublished Work - See title page for details.

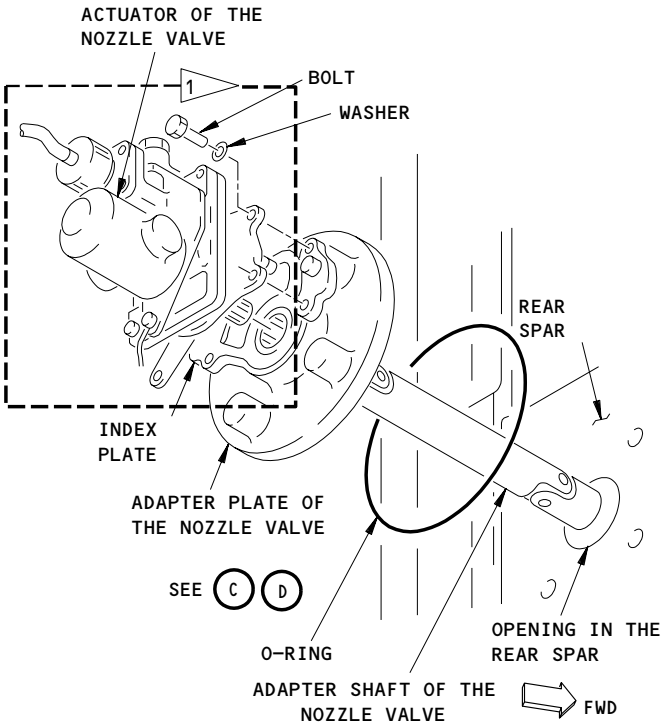

ACTUATOR OF THE NOZZLE VALVE

B

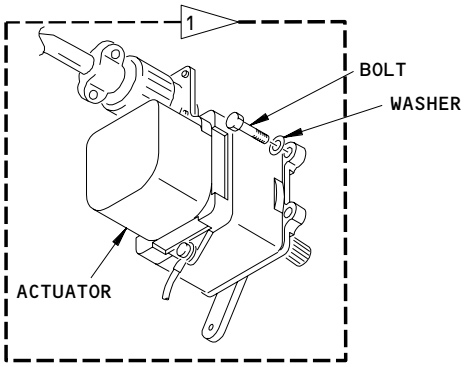

ACTUATOR OF THE NOZZLE VALVE

B

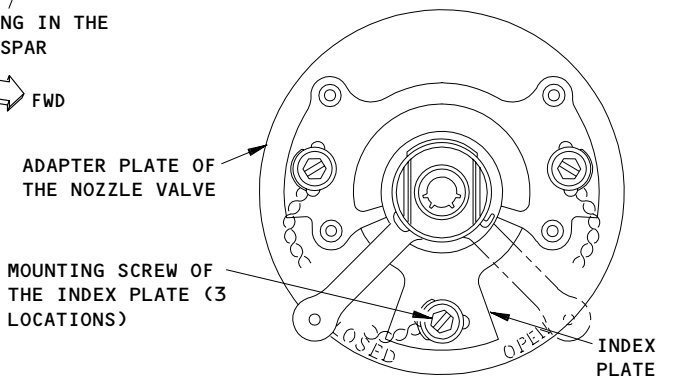

ADAPTER PLATE OF THE NOZZLE VALVE
(VIEW IN THE FORWARD DIRECTION)

C

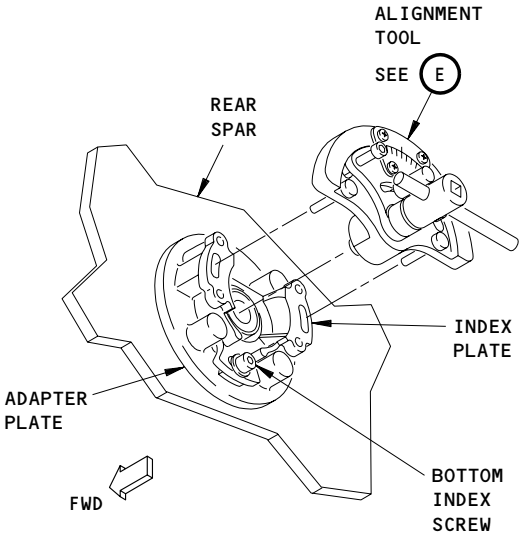

ADAPTER PLATE

D

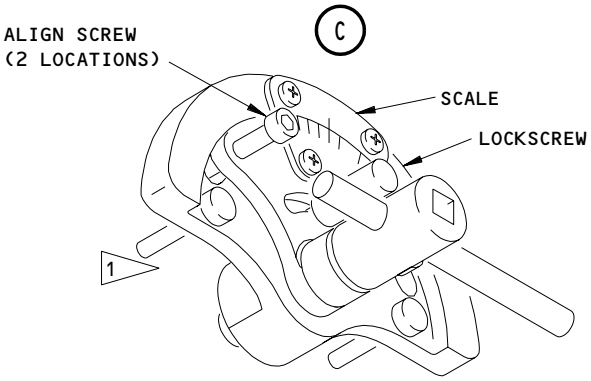

ALIGNMENT TOOL

E

1 ALTERNATE

Fuel Jettison Nozzle Valve Adapter Shaft
Figure 402 (Sheet 2)

BOEING PROPRIETARY - Copyright (C) - Unpublished Work - See title page for details.

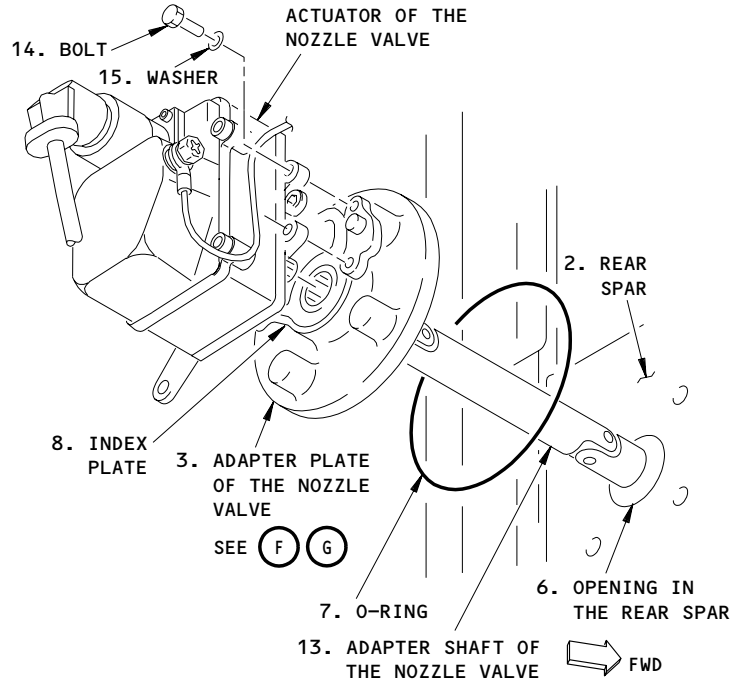

ACTUATOR OF THE NOZZLE VALVE

B 2

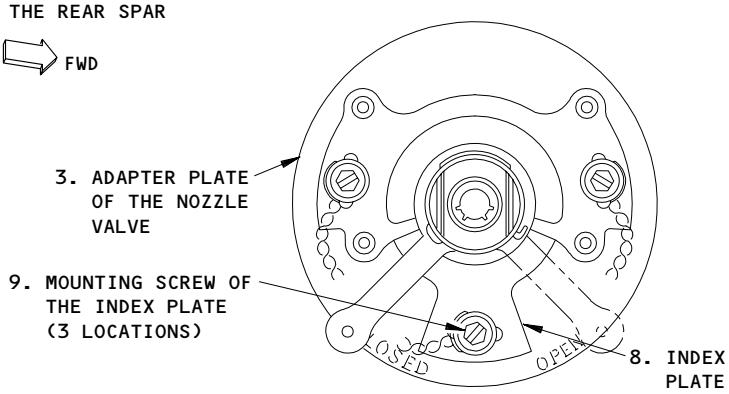

ADAPTER PLATE OF THE NOZZLE VALVE
(VIEW IN THE FORWARD DIRECTION)

F

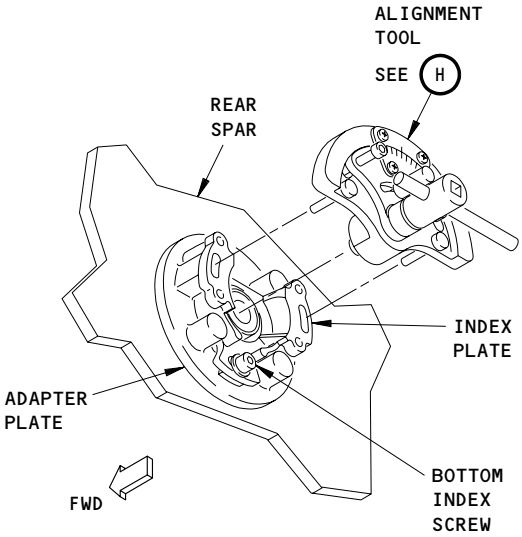

ADAPTER PLATE

G

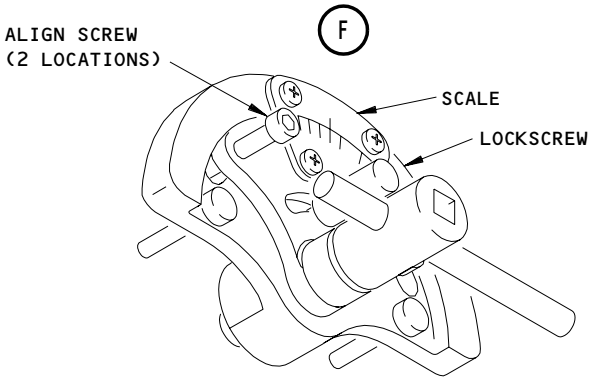

ALIGNMENT TOOL

H

2 RECOMMENDED

Fuel Jettison Nozzle Valve Adapter Shaft
Figure 402 (Sheet 3)

BOEING PROPRIETARY - Copyright (C) - Unpublished Work - See title page for details.

S 864-017

WARNING: DO THE DEACTIVATION PROCEDURE FOR THE TRAILING EDGE FLAPS. ACCIDENTAL OPERATION OF THE TRAILING EDGE FLAPS COULD CAUSE INJURY TO PERSONS.

(2) Do the deactivation procedure for the trailing edge flaps (AMM 27-51-00/201).

S 014-018

(3) Get access to the actuator of the nozzle valve on the rear spar of the applicable wing.

NOTE: The actuator is near the outboard edge of the outboard trailing edge flap.

S 864-019

(4) Move the manual override handle on the actuator to the CLOSED position (View D, Fig. 401).

S 654-020

(5) Defuel the applicable main fuel tank (AMM 28-26-00/201).

S 654-045

(6) Drain and purge the applicable fuel tank (AMM 28-11-00/201).

S 014-021

(7) Remove the applicable left or right main tank access door, 541UB or 641UB (AMM 28-11-01/401).

S 944-002

WARNING: OBEY THE FUEL TANK ENTRY PRECAUTIONS. FAILURE TO OBEY THE FUEL TANK ENTRY PRECAUTIONS COULD CAUSE INJURY TO PERSONS OR DAMAGE TO EQUIPMENT.

(8) Obey the fuel tank entry precautions (AMM 28-11-00/201).

S 014-022

(9) Go into the fuel tank.

S 024-023

(10) Disconnect the valve body of the nozzle valve from the fuel jettison manifold (View A).

S 024-024

(11) Remove the bolts and washers that attach the valve body to the mounting bracket (View B).

BOEING PROPRIETARY - Copyright (C) - Unpublished Work - See title page for details.

S 024-025
(12) Disengage the valve body from the adapter shaft.

S 024-026
(13) Remove the valve body.

TASK 28-31-03-404-027

3. Install the Valve Body of the Nozzle Valve (Fig. 401)

A. References
(1) AMM 12-11-01/301, Fuel Tank Pressure Fueling
(2) AMM 20-10-21/601, Electrical Bonding
(3) AMM 24-22-00/201, Electrical Power Control
(4) AMM 27-51-00/201, Flight Controls
(5) AMM 28-11-00/201, Fuel Tanks (Purging and Entry)
(6) AMM 28-11-01/401, Main Tank Access Door
(7) AMM 28-31-00/501, Fuel Jettison System

B. Access
(1) Location Zones
541 Main Tank - Outboard of Rib No. 10 (Left)
641 Main Tank - Outboard of Rib No. 10 (Right)

(2) Access Panels
541UB Main Tank Access Door (Left)
641UB Main Tank Access Door (Right)

C. Procedure

S 214-057
(1) Make sure the manual override handle on the actuator of the nozzle valve is in the CLOSED position (View D).

S 944-003

WARNING: OBEY THE FUEL TANK ENTRY PRECAUTIONS. FAILURE TO OBEY THE FUEL TANK ENTRY PRECAUTIONS COULD CAUSE INJURY TO PERSONS OR DAMAGE TO EQUIPMENT.

(2) Obey the fuel tank entry precautions (AMM 28-11-00/201).

S 014-004
(3) Go into the fuel tank (AMM 28-11-00/201).

S 424-005
(4) Engage the valve body on the adapter shaft (View A).

S 824-006
(5) Make sure the index marks on the adapter shaft and the index marks on the valve body align (View B).

BOEING PROPRIETARY - Copyright (C) - Unpublished Work - See title page for details.

S 424-007
(6) Install the bolts that connect the valve body to the mounting bracket.

S 424-008
(7) Connect the valve body to the fuel jettison manifold (View A).

S 224-009
(8) Make sure the bonding resistance between the valve body and the airplane structure is not more than 0.005 ohm (AMM 20-10-21/601) (View C).

S 414-010
(9) Install the applicable left or right main tank access door, 541UB or 641UB (AMM 28-11-01/401).

S 864-011
(10) Remove the DO-NOT-CLOSE tags and close these circuit breakers on the P11 panel:
(a) 11M14, LEFT JETT NOZZLE VALVE
(b) 11M23, RIGHT JETT NOZZLE VALVE

S 864-046
(11) Supply electrical power (AMM 24-22-00/201).

S 654-005
(12) Refuel the airplane if no more work is necessary (AMM 12-11-01/301).

S 714-012
(13) Do the Test of the Left or Right Nozzle Valve in the Air Mode and in the Ground Mode procedure (AMM 28-31-00/501).

S 864-004

WARNING: DO THE ACTIVATION PROCEDURE FOR THE TRAILING EDGE FLAPS. ACCIDENTAL OPERATION OF THE TRAILING EDGE FLAPS COULD CAUSE INJURY TO PERSONS.

(14) Do the activation procedure for the trailing edge flaps (AMM 27-51-00/201).

BOEING PROPRIETARY - Copyright (C) - Unpublished Work - See title page for details.

S 864-006

(15) Remove electrical power if it is not necessary (AMM 24-22-00/201).

TASK 28-31-03-004-007

4. Remove the Adapter Shaft of the Nozzle Valve (Fig. 402)

A. General

(1) The adapter shaft of the fuel jettison nozzle valve has an index plate and an adapter shaft. The adapter shaft has an adapter plate and a shaft.

B. References

(1) AMM 28-11-00/201, Fuel Tanks (Purging and Entry)
(2) AMM 28-11-01/401, Main Tank Access Door
(3) AMM 28-26-00/201, Defueling
(4) AMM 28-31-05/401, Fuel Jettison Nozzle Valve Actuator

C. Access

(1) Location Zones

541 Main Tank - Outboard of Rib No. 10 (Left)
641 Main Tank - Outboard of Rib No. 10 (Right)

(2) Access Panels

541UB Main Tank Access Door (Left)
641UB Main Tank Access Door (Right)

D. Procedure

S 864-038

(1) Open these circuit breakers on the overhead circuit breaker panel, P11, and attach DO-NOT-CLOSE tags:
(a) 11M14, LEFT JETT NOZZLE VALVE
(b) 11M23, RIGHT JETT NOZZLE VALVE

S 864-039

WARNING: DO THE DEACTIVATION PROCEDURE FOR THE TRAILING EDGE FLAPS. ACCIDENTAL OPERATION OF THE TRAILING EDGE FLAPS COULD CAUSE INJURY TO PERSONS.

(2) Do the deactivation procedure for the trailing edge flaps (AMM 27-51-00/201).

BOEING PROPRIETARY - Copyright (C) - Unpublished Work - See title page for details.

S 034-013
(3) Remove the actuator of the nozzle valve (AMM 28-31-05/401).

S 654-014
(4) Defuel the applicable main fuel tank (AMM 28-26-00/201).

S 654-008
(5) Drain and purge the applicable fuel tank (AMM 28-11-00/201).

S 014-015
(6) Remove the applicable left or right main tank access door, 541UB or 641UB (AMM 28-11-01/401).

S 944-009

WARNING: OBEY THE FUEL TANK ENTRY PRECAUTIONS. FAILURE TO OBEY THE FUEL TANK ENTRY PRECAUTIONS COULD CAUSE INJURY TO PERSONS OR DAMAGE TO EQUIPMENT.

(7) Obey the fuel tank entry precautions (AMM 28-11-00/201).

S 014-016
(8) Go into the fuel tank.

S 034-017
(9) Remove the bolts and washers that attach the the adapter plate the adapter shaft to the rear spar (View A, Fig. 402).

S 024-018
(10) Disengage the adapter shaft from the valve body.

S 024-019
(11) Remove the adapter shaft (with the index plate attached) through the opening in the rear spar (View B, Fig. 402).

TASK 28-31-03-404-020
5. Install the Adapter Shaft of the Nozzle Valve (Fig. 402)
A. General
(1) The adapter shaft of the fuel jettison nozzle valve has an index plate and an adapter shaft. The adapter shaft has an adapter plate and a shaft.
B. Consumable Materials
(1) G00034 Cotton Wiper, Process Cleaning Absorbent Wiper (cheesecloth, gauze) BMS15-5

BOEING PROPRIETARY - Copyright (C) - Unpublished Work - See title page for details.

(2) G50021 - Scotch-Brite 96W pad
(3) D00504 - Petrolatum grease
(4) C00064 Coating - Chemical Conversion Coating for Aluminum or Aluminum Alloys, MIL-C-5541 (MIL-C-81706) - Alodine 600
(5) C00307 BMS 10-20, Type II Class A - Finish, Corrosion Resistant
(6) A00247 Chromate Type Sealant - BMS 5-95, Class B
(7) A00767 Sealant - Integral Fuel Tank BMS 5-45
(8) B01008 Solvent - Series 88
(9) B01012 Solvent - Series 92

C. References
(1) AMM 12-11-01/301, Fuel Tank Pressure Fueling
(2) AMM 20-10-23/401, Lockwires
(3) AMM 20-30-88/201, Airplane Structure Cleaning Solvents (Series 88)
(4) AMM 20-30-92/201, Airplane Structure Cleaning Solvents (Series 92)
(5) AMM 24-22-00/201, Electrical Power Control
(6) AMM 27-51-00/201, Flight Controls
(7) AMM 28-11-00/201, Fuel Tanks (Purging and Entry)
(8) AMM 28-11-01/401, Main Tank Access Door
(9) AMM 28-31-05/401, Fuel Jettison Nozzle Valve Actuator
(10) AMM 51-31-01/201, Seals and Sealing
(11) SWPM 20-20-00, Electrical Bonding and Grounds

D. Equipment
(1) Brush - Soft Bristle
(2) BAC5000 - Sealant Removal Tool

E. Access
(1) Location Zones
541 Main Tank - Outboard of Rib No. 10 (Left)
641 Main Tank - Outboard of Rib No. 10 (Right)

(2) Access Panels
541UB Main Tank Access Door (Left)
641UB Main Tank Access Door (Right)

F. AIRPLANES WITHOUT ACTUATOR MA20A2027 OR MA30A1001;
Install the Adapter Shaft of the Nozzle Valve

S 434-021
(1) Install a new O-ring on the adapter plate of the nozzle valve (View B, Fig. 402).

S 214-022
(2) Make sure that the area on the rear spar that will be sealed is clean.

S 424-023
(3) Put the adapter shaft through the opening in the rear spar.

BOEING PROPRIETARY - Copyright (C) - Unpublished Work - See title page for details.

S 944-010

WARNING: OBEY THE FUEL TANK ENTRY PRECAUTIONS. FAILURE TO OBEY THE FUEL TANK ENTRY PRECAUTIONS COULD CAUSE INJURY TO PERSONS OR DAMAGE TO EQUIPMENT.

(4) Obey the fuel tank entry precautions (AMM 28-11-00/201).

S 014-024
(5) Go into the fuel tank.

S 424-025
(6) Engage the adapter shaft with the valve body (View A, Fig. 402).

S 434-026
(7) Use the bolts and washers to install the adapter plate.

S 394-027
(8) Apply the sealing compound around the bolts and the hole in the center of the adapter plate.

S 214-058
(9) Make sure the sealing compound does not touch the nozzle valve when it is in operation (AMM 51-31-01/201).

S 824-071
(10) Do this task: Adapter Shaft Alignment.

S 434-011
(11) Install the lockwire on the mounting bolts (AMM 20-10-23/401).

S 224-034
(12) Make sure the bonding resistance between the adapter plate and the airplane structure is 0.005 ohms or less (SWPM 20-20-00).

S 394-035
(13) Use the chromate type sealant to apply a fillet seal between the adapter plate and the rear spar (AMM 51-31-01/201) (View C, Fig. 401).

S 434-036
(14) Install the actuator of the nozzle valve (AMM 28-31-05/401).

BOEING PROPRIETARY - Copyright (C) - Unpublished Work - See title page for details.

G. AIRPLANES WITH ACTUATOR MA20A2027 OR MA30A1001;
Install the Adapter Shaft of the Nozzle Valve

S 124-077

(1) Remove the old sealant and clean the rear spar, adapter shaft, index plate, and fasteners (if reused).
   (a) Use the sealant removal tool and sealant removal tool handle (or equivalent) to remove the old sealant from the rear spar.
   (b) If new parts are to be installed, use an abrasive pad to remove the anodized finish from the faying surfaces of the adapter shaft and index plate (SWPM 20-20-00).

   WARNING: DO NOT GET SOLVENTS IN YOUR MOUTH, YOUR EYES, OR ON YOUR SKIN. DO NOT BREATHE THE FUMES FROM SOLVENTS. SOLVENTS ARE DANGEROUS MATERIALS. SOLVENTS CAN BE FLAMMABLE. OBEY THE MATERIAL SAFETY DATA SHEETS (MSDS) FOR SOLVENTS. OBEY LOCAL REGULATIONS FOR THE CORRECT PROCEDURES TO USE OR DISCARD SOLVENTS. SOLVENTS CAN CAUSE INJURIES TO PERSONNEL AND DAMAGE TO EQUIPMENT.

   (c) To remove the remaining sealant, grease, oil, dirt, and other contamination from the components, use one of these items soaked with Series 92 solvent (AMM 20-30-92/201).
      1) soft bristle brush
      2) cotton wiper
      3) Scotch-Brite 96W pad

S 114-078

(2) Do these steps to prepare the adapter plate of the adapter shaft and the rear spar for a fillet sealed electrical faying surface bond (SWPM 20-20-00):

   WARNING: DO NOT GET SOLVENTS IN YOUR MOUTH, YOUR EYES, OR ON YOUR SKIN. DO NOT BREATHE THE FUMES FROM SOLVENTS. SOLVENTS ARE DANGEROUS MATERIALS. SOLVENTS CAN BE FLAMMABLE. OBEY THE MATERIAL SAFETY DATA SHEETS (MSDS) FOR SOLVENTS. OBEY LOCAL REGULATIONS FOR THE CORRECT PROCEDURES TO USE OR DISCARD SOLVENTS. SOLVENTS CAN CAUSE INJURIES TO PERSONNEL AND DAMAGE TO EQUIPMENT.

   (a) Final clean the contact surfaces of the adapter plate and the rear spar with a cotton wiper soaked with Series 88 solvent (AMM 20-30-88/201).
   (b) Rub dry with a clean, dry cotton wiper.
   (c) Continue to clean and dry the surface until the dry cotton wiper stays clean.

S 434-079

(3) While outside of the airplane fuel tank, do these steps:
   (a) Put a thin layer of petrolatum grease on the new o-ring.
   (b) Put the o-ring in the o-ring groove of the adapter plate.

BOEING PROPRIETARY - Copyright (C) - Unpublished Work - See title page for details.

(c) Put the shaft of the adapter shaft through the opening in the rear spar.
(d) Make sure the shoulder of the adapter shaft does not bind in the opening of the rear spar.

S 864-080

WARNING: OBEY THE FUEL TANK ENTRY PRECAUTIONS (AMM 28-11-00/201). FAILURE TO OBEY THE FUEL TANK ENTRY PRECAUTIONS COULD CAUSE INJURY TO PERSONS OR DAMAGE TO EQUIPMENT.

(4) Obey the fuel tank entry precautions (AMM 28-11-00/201).

S 014-081

WARNING: DO THE PURGING AND FUEL TANK ENTRY PROCEDURE. FAILURE TO FOLLOW THE PURGING AND FUEL TANK ENTRY PROCEDURE COULD CAUSE INJURIES TO PERSONS OR DAMAGE TO EQUIPMENT.

(5) Go into the the fuel tank to the nozzle valve location (AMM 28-11-00/201).

S 424-082

(6) Do these steps to install the adapter shaft:
(a) Make sure that the index marks on the valve body and adapter shaft are aligned.

NOTE: A small misalignment of the index marks is satisfactory.

(b) Engage the shaft of the adapter shaft with the valve body.
(c) Apply sealant to the shank and the threads of the four bolts.

NOTE: CDCCL - Refer to the task: Airworthiness Limitation Precautions (AMM 28-00-00/201), for important information on Critical Design Configuration Control Limitations (CDCCLs).

NOTE: This is applicable to Airworthiness Limitation 28-AWL-23.

1) Use BMS5-45 Class B sealant for the wet installation of the bolts.
2) Make sure the sealant applied to the fasteners is approximately 0.060 inch (1.52 mm) thick.

(d) Install the bolts and washers to attach the adapter plate of the adapter shaft to the rear spar (View A, Fig. 402).

BOEING PROPRIETARY - Copyright (C) - Unpublished Work - See title page for details.

(e) Make sure the gap between the adapter shaft and the valve body spline is 0.20 +/- 0.20 inch (5.1 +/- 5.1 mm).

NOTE: If you cannot get the correct gap, loosen the support bracket for the valve body and adjust its position to get the correct gap.

S 764-083

(7) On the outside of the fuel tank, measure the bonding resistance between one of the raised serrated surfaces of the adapter plate (bare metal surface) and the rear spar.

(a) Make sure the resistance is 0.0005 ohm (0.5 milliohm) or less.

NOTE: CDCCL - Refer to the task: Airworthiness Limitation Precautions (AMM 28-00-00/201), for important information on Critical Design Configuration Control Limitations (CDCCLs).

NOTE: This is applicable to Airworthiness Limitation 28-AWL-23.

S 424-084

(8) On the inside of the tank, apply a fillet seal of BMS5-45 Class B sealant to these components (AMM 51-31-01/201):

NOTE: CDCCL - Refer to the task: Airworthiness Limitation Precautions (AMM 28-00-00/201), for important information on Critical Design Configuration Control Limitations (CDCCLs).

NOTE: This is applicable to Airworthiness Limitation 28-AWL-23.

(a) The four bolts.

(b) The periphery of the rear spar penetration and the stationary part of the adapter shaft.

NOTE: Make sure the sealant does not touch any part of the adapter shaft that turns.

BOEING PROPRIETARY - Copyright (C) - Unpublished Work - See title page for details.

S 424-085

(9) On the outside of the fuel tank, apply a fillet seal of BMS5-45 Class B sealant around the periphery of the adapter plate (AMM 51-31-01/201).

NOTE: CDCCL - Refer to the task: Airworthiness Limitation Precautions (AMM 28-00-00/201), for important information on Critical Design Configuration Control Limitations (CDCCLs).

NOTE: This is applicable to Airworthiness Limitation 28-AWL-23.

S 824-091

(10) Do this task: Adapter Shaft Alignment.

H. Install the Index Plate

S 824-092

(1) Do this procedure after you have correctly aligned and marked the alignment position of the index plate and adapter plate per this task: Adapter Shaft Alignment.

S 024-093

(2) Remove the mounting screws and washers to remove index plate from the adapter plate.

S 424-094

(3) Do these steps to prepare the index plate and the adapter plate for a sealed electrical faying surface bond (SWPM 20-20-00).

(a) Protect the alignment reference mark when you clean the index plate and the adapter plate for the electrical bond.

WARNING: DO NOT GET SOLVENTS IN YOUR MOUTH, YOUR EYES, OR ON YOUR SKIN. DO NOT BREATHE THE FUMES FROM SOLVENTS. SOLVENTS ARE DANGEROUS MATERIALS. SOLVENTS CAN BE FLAMMABLE. OBEY THE MATERIAL SAFETY DATA SHEETS (MSDS) FOR SOLVENTS. OBEY LOCAL REGULATIONS FOR THE CORRECT PROCEDURES TO USE OR DISCARD SOLVENTS. SOLVENTS CAN CAUSE INJURIES TO PERSONNEL AND DAMAGE TO EQUIPMENT.

(b) Final clean the contact surfaces with a cotton wiper soaked with Series 88 solvent (AMM 20-30-88/201).

(c) Rub dry with a clean, dry cotton wiper.

(d) Continue to clean and dry the surface until the dry cotton wiper stays clean.

BOEING PROPRIETARY - Copyright (C) - Unpublished Work - See title page for details.

(e) Apply a thin continuous layer of sealant to the serrated surface of the index plate (three locations).

NOTE: CDCCL - Refer to the task: Airworthiness Limitation Precautions (AMM 28-00-00/201), for important information on Critical Design Configuration Control Limitations (CDCCLs).

NOTE: This is applicable to Airworthiness Limitation 28-AWL-23.

1) Use Pro Seal 890A or PR-1440A sealant for the faying surface seal.
2) Make sure the sealant layer is approximately 0.005 in. (0.127 mm) thick.

(f) Apply sealant to the shank and the threads of the mounting screws.

NOTE: CDCCL - Refer to the task: Airworthiness Limitation Precautions (AMM 28-00-00/201), for important information on Critical Design Configuration Control Limitations (CDCCLs).

NOTE: This is applicable to Airworthiness Limitation 28-AWL-23.

1) Use Pro Seal 890A or PR-1440A sealant for the wet installation of the mounting screws.
2) Make sure the sealant applied to the fasteners is approximately 0.060 in. (1.524 mm) thick.

S 424-095

(4) Do these steps to install the index plate.
(a) Align the index plate and the adapter plate with the alignment reference mark that you made during the adapter shaft alignment procedure.
(b) Install the two mounting screws and washers in the top index mounting hole positions.
(c) Install the mounting screw and washer in the bottom index mounting hole position.
(d) Tighten the mounting screws to 22 +/- 1 in-lb (2.5 +/- 0.1 Nm).
(e) Make sure the sealant is continuously squeezed out along the edges of the contact surfaces.
(f) If there are gaps, bubbles or voids in the sealant squeeze out, then disassemble and apply more sealant.
(g) Shape the squeezed out sealant into a fillet seal (AMM 51-31-01/201).

BOEING PROPRIETARY - Copyright (C) - Unpublished Work - See title page for details.

(h) As an option, remove the extra squeezed out sealant.

NOTE: Make sure the sealant that remains is flush with the mating part edges.

S 764-096

(5) Measure the bonding resistance between one of the actuator attachment contact surfaces on the index plate (bare metal surface) and the rear spar.
(a) Make sure the bonding resistance is 0.002 ohm (2 milliohm) or less.

S 424-097

(6) Lockwire the mounting screws and the index plate together.

S 794-098

(7) Do this task: Install the Actuator of the Nozzle Valve (AMM 28-31-05/401).

S 374-099

(8) Do this task to apply protective finishes to the bare areas of the rear spar: Apply the Corrosion Resistant Finish (Topcoat) (AMM 28-11-00/701).

NOTE: Re-apply the protective finishes to the rear spar where the electrical bonding probes removed the finishes.

(a) These are the protective finishes:
1) Alodine 600 coating
2) BMS 10-20 coating

I. Put the Airplane Back to its Usual Condition

S 414-037

(1) Install the left or right main tank access door, 541UB or 641UB (AMM 28-11-01/401).

S 864-012

(2) Remove the DO-NOT-CLOSE tags and close these circuit breakers on the P11 panel:
(a) 11M14, LEFT JETT NOZZLE VALVE
(b) 11M23, RIGHT JETT NOZZLE VALVE

S 654-013

(3) Refuel the airplane if no more work is necessary (AMM 12-11-01/301).

BOEING PROPRIETARY - Copyright (C) - Unpublished Work - See title page for details.

S 864-014

WARNING: DO THE ACTIVATION PROCEDURE FOR THE TRAILING EDGE FLAPS. ACCIDENTAL OPERATION OF THE TRAILING EDGE FLAPS COULD CAUSE INJURY TO PERSONS.

(4) Do the activation procedure for the trailing edge flaps (AMM 27-51-00/201).

S 864-015

(5) Remove the electrical power if it is not necessary (AMM 24-22-00/201).

TASK 28-31-03-824-060

6. Adapter Shaft Alignment (Fig. 402)

A. Equipment

(1) B28009-1, Adapter Shaft Alignment Tool

(2) Torque meter - 0-15 pound-inches, with a resolution of +/- 1 pound-inches (optional)

B. References

(1) AMM 28-31-05/401, Fuel Jettison Nozzle Valve Actuator

C. Access

(1) Location Zones

541 Main Tank - Outboard of Rib No. 10 (Left)
641 Main Tank - Outboard of Rib No. 10 (Right)

(2) Access Panels

541UB Main Tank Access Door (Left)
641UB Main Tank Access Door (Right)

D. Procedure

S 484-061

(1) Do these steps to install the alignment tool in the adapter plate:

(a) Remove the top two mounting screws and washers from the index plate.

(b) Loosen the bottom mounting screw, but do not remove it.

(c) Install the alignment tool (Fig. 402):

(d) Put the alignment tool in its position with the two guide pins in the holes left by the two mounting index screws that you removed (the scale should be on the top of the tool).

(e) Make sure the spline on the tool engages with the spline on the shaft.

BOEING PROPRIETARY - Copyright (C) - Unpublished Work - See title page for details.

S 824-062

(2) Do these steps to align the adapter shaft (Procedure 1, optional to Procedure 2):

NOTE: This procedure finds the point where the internal valve butterfly engages the valve seal. The torque required to turn the shaft increases as the butterfly engages the seal, then decreases again as the butterfly leaves the other side of the seal. Once the edge of the seal is found, the valve shaft will then be turned to center the butterfly on the seal.

(a) Put the tool handle in the extreme counterclockwise position.
(b) Turn the handle slowly in the clockwise direction at a constant rate while you note the changes in the torque necessary to turn the handle.
(c) Do the previous steps as many times as necessary to find the point in the rotation where the torque necessary to turn the handle increases significantly.
(d) If you cannot find the position in the rotation where the torque increases significantly, then use Procedure 2 below.
(e) Put the shaft in the extreme counterclockwise position again.
(f) Slowly and smoothly turn the handle of the tool clockwise until a distinct increase in torque is found and immediately stop turning the handle.
(g) Read the scale on the tool.

NOTE: This is the point where the valve butterfly starts to engage the edge of the seal.

(h) Turn the handle 13 degrees more in the clockwise direction (the scale on the tool is calibrated in degrees).

NOTE: The valve butterfly is now centered on the valve seal. If you turn the handle past the target value, do not turn the handle back in the counterclockwise direction again. You must start the procedure again with the handle in the extreme counterclockwise position.

S 824-063

(3) Do these steps to align the adapter shaft (Procedure 2, optional to procedure 1):

NOTE: A torque meter is necessary to do this procedure.

(a) Put the tool handle in the extreme counterclockwise position.
(b) Slowly and smoothly turn the tool handle to the extreme clockwise position while you monitor the torque that you apply to the handle.

BOEING PROPRIETARY - Copyright (C) - Unpublished Work - See title page for details.

(c) Write down the maximum torque that you apply to the tool while you turn it from the extreme counterclockwise position to the extreme clockwise position.
(d) Turn the tool back to the extreme counterclockwise position.
(e) Turn the shaft clockwise again at approximately the same rate that you used before.
(f) Stop at the position where the torque increases to approximately two-thirds of the maximum torque that you wrote down before.
(g) Read the scale on the tool at this position.

NOTE: This is the position where valve butterfly starts to engage the edge of the seal.

(h) Turn the handle 13 more degrees in the clockwise direction past the reading from the previous step.

NOTE: The butterfly valve is now centered on the valve seal. If you turn the valve past the target value, do not turn it back in the counterclockwise direction. You must start again with the tool handle in the extreme counterclockwise position.

S 034-064
(4) Tighten the lockscrew on the tool to keep the adapter shaft in its position.

S 824-065
(5) Turn the index plate until the actuator mounting holes in the index plate are aligned with the two upper holes for the actuator mounting screws.

S 824-066
(6) Insert the two align screws into the holes for the actuator mounting screws to hold the index plate in alignment with the mounting plate (this is a final adjustment of the position of the index plate).

BOEING PROPRIETARY - Copyright (C) - Unpublished Work - See title page for details.

S 434-067
(7) Tighten the bottom index screw to a torque of 21-23 pound-inches.

S 084-068
(8) Carefully remove the align screws.

S 084-069
(9) Carefully remove the alignment tool from the index plate.

S 434-070
(10) Install the top two mounting screws and washers in the index plate and tighten them to a torque of 21-23 pound-inches.

BOEING PROPRIETARY - Copyright (C) - Unpublished Work - See title page for details.

FUEL JETTISON NOZZLE VALVE - INSPECTION/CHECK

1. General
   A. This procedure contains this task: Jettison Nozzle Valve Leak Check.
   B. Do this task to make sure the jettison nozzle valve(s) are within leakage limits.
   C. This procedure pressurizes the refuel/jettison manifold. Follow the precautions for refueling given in this procedure: Precautions and Limits for the Refuel Operation (AMM 12-11-01/301).
      (1) If it is necessary to open the jettison nozzle valve(s) you must first remove the pressure from the refuel/jettison manifold. Follow the precautions for operation of the jettison nozzle valve(s) in this task: Operational Test - Fuel Jettison System (AMM 28-31-00/501).

TASK 28-31-03-206-033

2. Jettison Nozzle Valve Leak Check
   A. References
      (1) AMM 24-22-00/201, Electrical Power Control
      (2) AMM 28-21-00/501, Pressure Fueling System
      (3) AMM 28-31-00/501, Fuel Jettison System
      (4) AMM 28-31-03/401, Fuel Jettison Nozzle Valve
   B. Access
      (1) Location Zones

541	Main Tank - Outboard of Rib No. 10 (Left)
641	Main Tank - Outboard of Rib No. 10 (Right)

   C. Prepare for the Leak Check

      S 866-002
      (1) Supply electrical power to the airplane (AMM 24-22-00/201).

      S 656-034
      (2) Refuel the airplane if it is necessary (AMM 12-11-01/301).

      NOTE: The minimum fuel quantity necessary to make sure all of the override/jettison pumps are correctly primed is 21,700 lbs (9900 kgs) in the auxiliary fuel tank.

      You can refuel the auxiliary fuel tank by pressure fueling (AMM 12-11-01/301) or by tank to tank transfer (AMM 28-26-00/201).

BOEING PROPRIETARY - Copyright (C) - Unpublished Work - See title page for details.

S 216-035

(3) Make sure the fuel jettison switch on the overhead panel, P5, is in the OFF position.

S 216-036

(4) Make sure the six EICAS circuit breakers are closed.

S 866-037

WARNING: DO THE DEACTIVATION PROCEDURE FOR THE TRAILING EDGE FLAPS. ACCIDENTAL OPERATION OF THE TRAILING EDGE FLAPS COULD CAUSE INJURY TO PERSONS.

(5) Do the deactivation procedure for the trailing edge flaps (AMM 27-51-00/201).

S 866-038

WARNING: DO THE DEACTIVATION PROCEDURE FOR THE SPOILERS OR MOVE ALL PERSONS AND EQUIPMENT AWAY FROM THE SPOILERS. THE SPOILERS CAN RETRACT QUICKLY AND CAUSE INJURY TO PERSONS OR DAMAGE TO EQUIPMENT.

(6) Do the deactivation procedure for the spoilers (AMM 27-61-00/201) or move all persons and equipment away from the spoilers.

S 866-039

WARNING: MAKE SURE THE SPOILERS ARE FULLY RETRACTED DURING THE FUEL JETTISON TEST. IF THE SPOILERS ARE NOT FULLY RETRACTED, THE SPOILERS CAN RETRACT SUDDENLY AND CAUSE INJURY TO PERSONS AND DAMAGE TO EQUIPMENT.

(7) Make sure all of the spoilers are in their full down positions (fully retracted) (AMM 27-61-00/201).

NOTE: Operation of the fuel jettison transfer valve can cause the air/ground system to go into air mode momentarily. This causes the spoilers to retract suddenly if they are in the up position.

(a) The speedbrake lever must be in its down-and-locked detent position.
(b) Attach a DO-NOT-OPERATE tag to the speedbrake lever.

BOEING PROPRIETARY - Copyright (C) - Unpublished Work - See title page for details.

S 496-040
(8) Set up support equipment at the applicable jettison nozzle.

S 866-041
(9) Make sure these circuit breakers are closed:
(a) On the main power distribution panel, P6:
1) 6F15, L FUEL OVRD PUMP
2) 6F21, R FUEL OVRD PUMP
(b) On the overhead circuit breaker panel, P11:
1) 11M13, LEFT JETT CONT
2) 11M22, RIGHT JETT CONT
3) 11M15, FUEL PUMPS L CTR
4) 11M24, FUEL PUMPS R CTR
(c) On the left miscellaneous electrical equipment panel, P36:
1) 36F4 or 36G7, L FUEL JETT PUMP
(d) On the right miscellaneous electrical equipment panel, P37:
1) 37F4 or 37G4, R FUEL JETT PUMP

S 866-042

WARNING: OPEN THESE CIRCUIT BREAKERS, AND ATTACH DO-NOT-CLOSE IDENTIFIERS. IF THESE CIRCUIT BREAKERS ARE CLOSED, A FUEL LEAK THROUGH THE JETTISON NOZZLES CAN OCCUR. A FUEL LEAK CAN CAUSE A FIRE, OR AN EXPLOSION. THIS CAN CAUSE INJURIES TO PERSONNEL, AND DAMAGE TO EQUIPMENT.

(10) Open these circuit breakers on the overhead circuit breaker panel, P11, and attach DO-NOT-CLOSE tags:
(a) 11M14, L JETTISON NOZZLE VALVE
(b) 11M23, R JETTISON NOZZLE VALVE

S 866-043
(11) To pressurize the refuel/jettison manifold, turn the FUEL JETTISON switch, found on the overhead panel, P5, to the ON position.

D. Fuel Jettison Nozzle Valve Leak Check

S 796-044
(1) Do a check for fuel leaks at the jettison nozzle.

S 796-045
(2) Collect any fuel from the jettison nozzle in a suitable container.

S 796-046
(3) If the fuel leakage rate at the jettison nozzle is 20 drops per minute or less, then the jettison nozzle valve is satisfactory.

BOEING PROPRIETARY - Copyright (C) - Unpublished Work - See title page for details.

S 796-047

(4) If the fuel leakage rate is more than 20 drops per minute, then do these steps:
   (a) Turn the FUEL JETTISON switch, found on the overhead panel, P5, to the OFF position.
   (b) On the fueling control panel, P28, set the switch for the center auxiliary fueling shutoff valve to the ON position.
   (c) If the fueling manifold is pressurized, make sure the blue fueling valve OPEN lights come on and then goes off.
   (d) Wait ten minutes to remove the pressure in the manifold.
   (e) Set the switch for the auxiliary fuel tank fueling shutoff valve to the CLOSED position.
   (f) Do this task to test the fuel jettison nozzle valves: Operational Test - Fuel Jettison System (AMM 28-31-00/501).
   (g) After you open and close the jettison nozzle valve(s), then do the jettison nozzle valve leak check again.
   (h) If the fuel leakage rate at the jettison nozzle is now 20 drops per minute or less, then the jettison nozzle valve is satisfactory.
   (i) If the fuel leakage rate continues to be more than 20 drops per minute, then the fuel jettison nozzle valve(s) must be replaced (AMM 28-31-03/401).

E. Put the Airplane Back to the Usual Condition

S 096-048

(1) Remove the support equipment from the jettison nozzle location.

S 866-049

(2) Remove the DO-NOT-OPERATE tag from the speedbrake lever.

S 866-050

(3) Remove the safety tags and close these circuit breakers:
   (a) 11M14, L JETTISON NOZZLE VALVE
   (b) 11M23, R JETTISON NOZZLE VALVE

S 866-051

(4) Remove the electrical power, if it is not necessary for subsequent procedures (AMM 24-22-00/201).

BOEING PROPRIETARY - Copyright (C) - Unpublished Work - See title page for details.

FUEL JETTISON TRANSFER VALVE ACTUATOR - REMOVAL/INSTALLATION

1. General
   A. There are two transfer valves for the fuel jettison system. Each transfer valve has three parts: the actuator, the adapter shaft, and the valve body. The adapter shaft and the valve body are installed on the rear spar in the auxiliary fuel tank. The actuator is installed on the rear spar out of the auxiliary fuel tank.
   B. It is not necessary to defuel the fuel tanks to replace the actuator.
   C. This procedure contains two tasks. The first task removes the actuator of the transfer valve. The second task installs the actuator of the transfer valve.
   D. The procedure to remove and install the valve body and the adapter shaft is in AMM 28-31-06/401.

TASK 28-31-04-004-001

2. Remove the Actuator of the Transfer Valve (Fig. 401)
   A. References
      (1) AMM 32-00-15/201, Landing Gear Door Locks
      (2) AMM 32-00-20/201, Landing Gear Downlocks
   B. Access
      (1) Location Zones
          531 Center Auxiliary Tank (Left)
          631 Center Auxiliary Tank (Right)

   C. Procedure

      S 864-008
      (1) Open these circuit breakers on the overhead circuit breaker panel, P11 and attach DO-NOT-CLOSE tags:
          (a) 11M13, LEFT JETT CONT
          (b) 11M22, RIGHT JETT CONT

      S 214-002
      (2) Make sure the downlocks are installed on the nose and main landing gear (AMM 32-00-20/201).

BOEING PROPRIETARY - Copyright (C) - Unpublished Work - See title page for details.

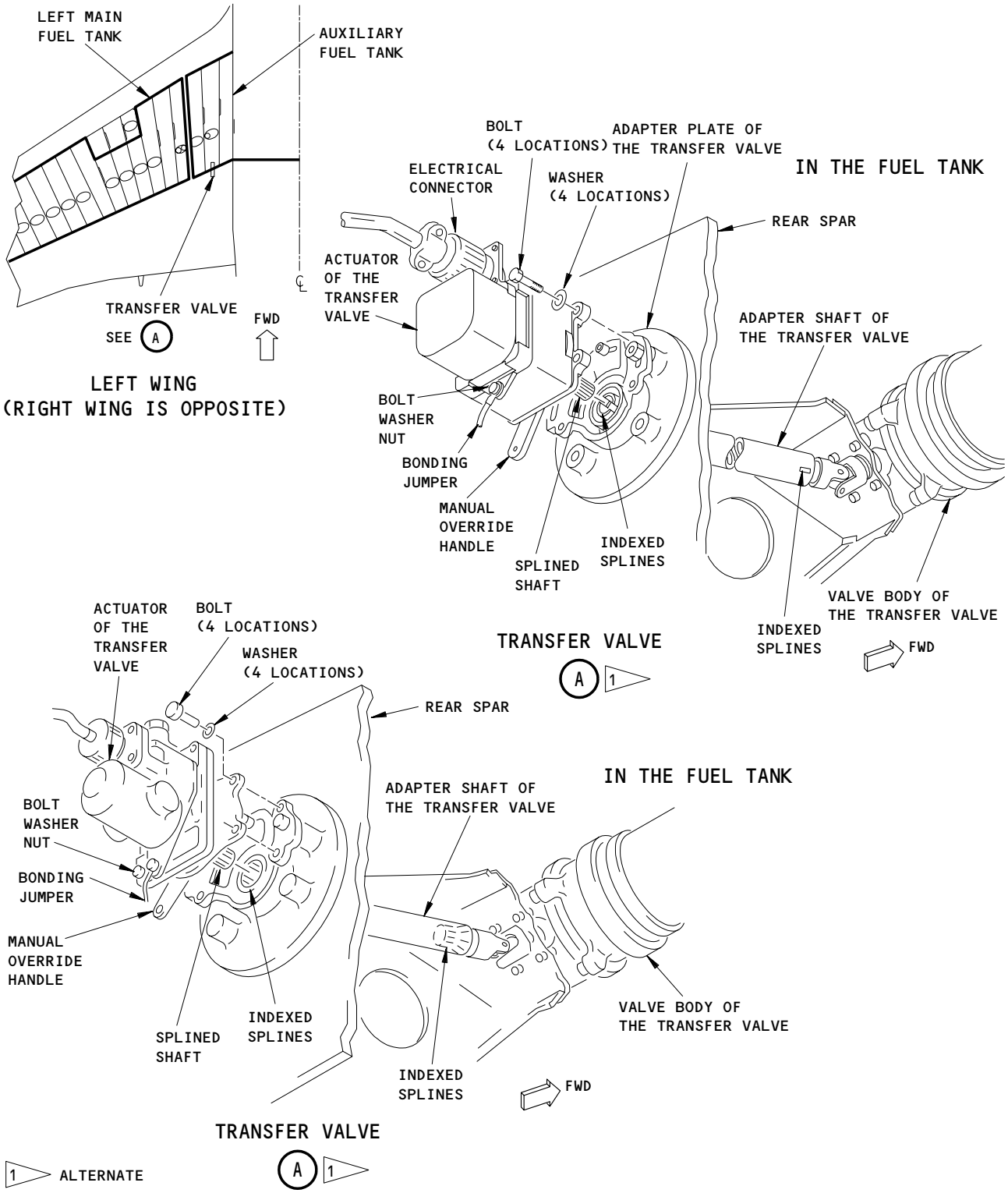

Fuel Jettison Transfer Valve Actuator
Figure 401 (Sheet 1)

BOEING PROPRIETARY - Copyright (C) - Unpublished Work - See title page for details.

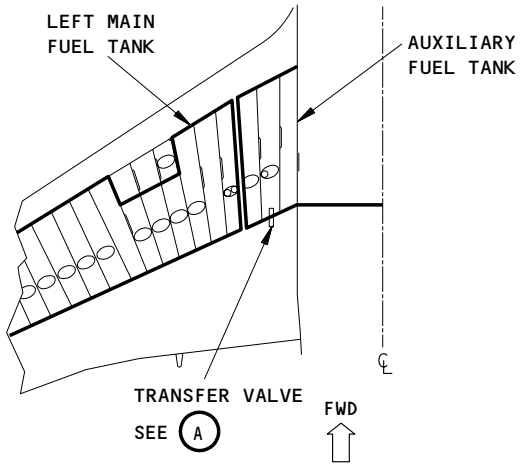

LEFT WING
(RIGHT WING IS OPPOSITE)

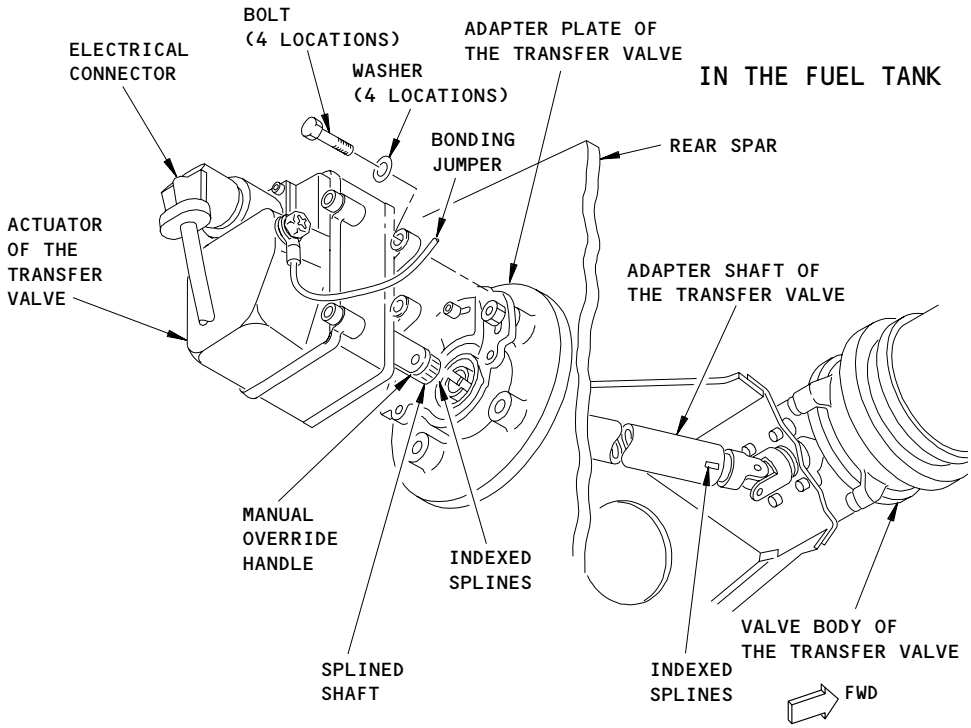

TRANSFER VALVE

2 RECOMMENDED

A 2

Fuel Jettison Transfer Valve Actuator
Figure 401 (Sheet 2)

BOEING PROPRIETARY - Copyright (C) - Unpublished Work - See title page for details.

S 494-003

WARNING: USE THE PROCEDURE IN AMM 32-00-15/201 TO INSTALL THE DOOR LOCKS. THE DOORS OPEN AND CLOSE QUICKLY AND CAN CAUSE INJURY TO PERSONS OR DAMAGE TO EQUIPMENT.

(3) Open the doors for the landing gear and install the door locks (AMM 32-00-15/201).

S 034-009

(4) Remove the electrical connector from the actuator of the transfer valve.

S 864-010

(5) Move the manual override handle on the actuator of the transfer valve to the CLOSED position.

S 034-011

(6) Remove the bolt, washer and nut to disconnect the bonding jumper from the actuator.

S 034-012

(7) Remove the bolts and washers that attach the actuator to the adapter plate.

S 024-013

(8) Disengage the splined shaft from the adapter plate to remove the actuator.

TASK 28-31-04-404-004

3. Install the Actuator of the Transfer Valve (Fig. 401)

A. References
(1) AMM 20-30-88/201, Airplane Structure Cleaning Solvents (Series 88)
(2) AMM 20-30-92/201, Airplane Structure Cleaning Solvents (Series 92)
(3) AMM 24-22-00/201, Electrical Power Control
(4) AMM 28-11-00/701, Fuel Tanks
(5) AMM 28-31-00/501, Fuel Jettison System
(6) AMM 32-00-15/201, Landing Gear Door Locks
(7) AMM 51-21-04/701, Alodine Coating
(8) SWPM 20-20-00, Electrical Bonding and Grounds

B. Equipment
(1) Brush - Soft Bristle
(2) BAC5000 - Sealant Removal Tool

C. Consumable Materials
(1) C00064 Coating - Chemical Conversion Coating for Aluminum or Aluminum Alloys, MIL-C-5541 (MIL-C-81706) - Alodine 600 and 1200
(2) G00034 Cotton Wiper, Process Cleaning Absorbent Wiper (cheesecloth, gauze) BMS15-5
(3) C00307 BMS 10-20, Type II Class A - Finish, Corrosion Resistant
(4) G50021 - Scotch-Brite 96W pad

BOEING PROPRIETARY - Copyright (C) - Unpublished Work - See title page for details.

(5) Sealant, BMS 5-45 Class C
(6) Sealant, BMS 5-95 Class B or C
(7) Sealant, BMS 5-142
(8) B01008 Solvent - Series 88
(9) B01012 Solvent - Series 92

D. Access
(1) Location Zones
531 Center Auxiliary Tank (Left)
631 Center Auxiliary Tank (Right)

E. AIRPLANES WITHOUT ACTUATOR MA20A2027 OR MA30A1001;
Install the Actuator of the Transfer Valve

S 864-014
(1) Move the manual override handle on the actuator of the transfer valve to the CLOSED position.

S 424-015
(2) Put the actuator against the adapter plate.

S 214-016
(3) Make sure the splined shaft engages.

S 424-017
(4) Install the bolts and washers that attach the actuator to the adapter plate.

S 434-018
(5) Install the lockwire on the bolts.

S 434-019
(6) Install the bolt, washer and nut to connect the bonding jumper to the actuator.

S 434-020
(7) Install the electrical connector on the actuator.

S 224-021
(8) Make sure the bonding resistance between the actuator and the airplane structure is not more than 0.005 ohm (SWPM 20-20-00).

S 864-022
(9) Remove the DO-NOT-CLOSE tags and close these circuit breakers on the P11 panel:
(a) 11M13, LEFT JETT CONT
(b) 11M22, RIGHT JETT CONT

S 864-005
(10) Supply electrical power (AMM 24-22-00/201).

BOEING PROPRIETARY - Copyright (C) - Unpublished Work - See title page for details.

F. AIRPLANES WITH ACTUATOR MA20A2027 OR MA30A1001;
Install the Actuator of the Transfer Valve

S 144-046

(1) Remove the old sealant and clean the actuator, index plate, and fasteners (if reused).

(a) Use the sealant removal tool and sealant removal tool handle (or equivalent) to remove old sealant from the actuator and index plate.

WARNING: DO NOT GET SOLVENTS IN YOUR MOUTH, YOUR EYES, OR ON YOUR SKIN. DO NOT BREATHE THE FUMES FROM SOLVENTS. SOLVENTS ARE DANGEROUS MATERIALS. SOLVENTS CAN BE FLAMMABLE. OBEY THE MATERIAL SAFETY DATA SHEETS (MSDS) FOR SOLVENTS. OBEY LOCAL REGULATIONS FOR THE CORRECT PROCEDURES TO USE OR DISCARD SOLVENTS. SOLVENTS CAN CAUSE INJURIES TO PERSONNEL AND DAMAGE TO EQUIPMENT.

(b) To remove the remaining sealant, grease, oil, dirt, and other contamination from the components, use one of these items soaked with Series 92 solvent (AMM 20-30-92/201).

1) soft bristle brush
2) cotton wiper
3) Scotch-Brite 96W pad

S 424-047

(2) Do these steps to prepare the actuator and the index plate for a sealed electrical faying surface bond (SWPM 20-20-00):

WARNING: DO NOT GET SOLVENTS IN YOUR MOUTH, YOUR EYES, OR ON YOUR SKIN. DO NOT BREATHE THE FUMES FROM SOLVENTS. SOLVENTS ARE DANGEROUS MATERIALS. SOLVENTS CAN BE FLAMMABLE. OBEY THE MATERIAL SAFETY DATA SHEETS (MSDS) FOR SOLVENTS. OBEY LOCAL REGULATIONS FOR THE CORRECT PROCEDURES TO USE OR DISCARD SOLVENTS. SOLVENTS CAN CAUSE INJURIES TO PERSONNEL AND DAMAGE TO EQUIPMENT.

(a) Final clean the contact surfaces with a cotton wiper soaked with Series 88 solvent (AMM 20-30-88/201).
(b) Rub dry with a clean, dry cotton wiper.
(c) Continue to clean and dry the surface until the dry cotton wiper stays clean.

BOEING PROPRIETARY - Copyright (C) - Unpublished Work - See title page for details.

(d) Apply a thin continuous layer of sealant to the actuator contact areas (four locations).

NOTE: CDCCL - Refer to the task: Airworthiness Limitation Precautions (AMM 28-00-00/201), for important information on Critical Design Configuration Control Limitations (CDCCLs).

NOTE: This is applicable to Airworthiness Limitation 28-AWL-23.

1) Use BMS 5-45 Class C or BMS 5-95 Class B or C sealant for the faying surface seal.
2) Make sure the sealant layer is approximately 0.005 inch (0.127 mm) thick.

(e) Apply sealant to the shank and the threads of the bolts.

NOTE: CDCCL - Refer to the task: Airworthiness Limitation Precautions (AMM 28-00-00/201), for important information on Critical Design Configuration Control Limitations (CDCCLs).

NOTE: This is applicable to Airworthiness Limitation 28-AWL-23.

1) Use BMS 5-45 Class C or BMS 5-95 Class B or C sealant for the wet installation of the bolts.

NOTE: Use the same sealant on the bolts that was used for the faying surface seal.

2) Make sure the sealant applied to the fasteners is approximately 0.060 inch (1.52 mm) thick.

S 424-048

(3) Do these steps to install the actuator to the index plate.
(a) Make sure the manual override handle is in the CLOSED position.
(b) Align the splined shaft with the adapter shaft.
(c) Make sure the two spaces for teeth on the adapter shaft align with the splined shaft.
(d) Put the splined shaft into the actuator shaft.

NOTE: The contact areas of the actuator automatically align with the mounting points on the index plate.

(e) Install the actuator securing bolts and washers that attach the actuator to the index plate.

NOTE: Lockwire is not necessary for the actuator securing bolts.

BOEING PROPRIETARY - Copyright (C) - Unpublished Work - See title page for details.

(f) Tighten the bolts to 20 in-lb (2.3 Nm).
(g) Make sure the sealant is continuously squeezed out along the edges of the contact surfaces.
(h) If there are gaps, bubbles or voids in the sealant squeeze out, then disassemble and apply more sealant.
(i) Shape the squeezed out sealant into a fillet seal.
(j) As an option, remove the extra squeezed out sealant.

NOTE: Make sure the sealant that remains is flush with the mating part edges.

S 764-049
(4) Measure the electrical bonding resistance between the upper housing of the actuator (at the bare metal bonding jumper installation location) and the rear spar (SWPM 20-20-00).
(a) Do this measurement with the bonding jumper and the electrical connector disconnected.
(b) Make sure the bonding jumper does not touch the actuator during the bonding measurement.
(c) Make sure the bonding resistance is 0.0025 ohm (2.5 milliohms) or less.

NOTE: CDCCL - Refer to the task: Airworthiness Limitation Precautions (AMM 28-00-00/201), for important information on Critical Design Configuration Control Limitations (CDCCLs).

NOTE: This is applicable to Airworthiness Limitation 28-AWL-23.

S 764-050
(5) Measure the electrical bonding resistance between the loose end of the bonding jumper and the rear spar (SWPM 20-20-00).
(a) Make sure the bonding resistance is 0.0015 ohm (1.5 milliohms) or less.

NOTE: CDCCL - Refer to the task: Airworthiness Limitation Precautions (AMM 28-00-00/201), for important information on Critical Design Configuration Control Limitations (CDCCLs).

NOTE: This is applicable to Airworthiness Limitation 28-AWL-23.

BOEING PROPRIETARY - Copyright (C) - Unpublished Work - See title page for details.

S 424-051

(6) Do these steps to install the bonding jumper to the actuator:

(a) Final clean the contact surfaces with a cotton wiper soaked with Series 88 solvent (AMM 20-30-88/201).

1) Rub dry with a clean, dry cotton wiper.

2) Continue to clean and dry the surface until the dry cotton wiper stays clean.

(b) Apply a thin continuous layer of sealant to both surfaces of the bonding jumper and the washers.

1) Use BMS 5-142 sealant for the faying surface seal.

2) Make sure the sealant layer is approximately 0.005 inch (0.127 mm) thick.

(c) Install the screw, washers, and nut to attach the bonding jumper to the actuator.

(d) AIRPLANES WITHOUT ACTUATOR MA30A1001;
Tighten the screw to 20 in-lb (2.3 Nm).

(e) AIRPLANES WITH ACTUATOR MA30A1001;
Tighten the screw to 35 in-lb (4.0 Nm).

(f) Measure the electrical bonding resistance between the upper housing of the actuator and the attached bonding jumper terminal (SWPM 20-20-00).

1) Do not touch the screw when you make the bonding measurement.

2) Make sure the bonding resistance is 0.001 ohm (1 milliohm) or less.

NOTE: CDCCL - Refer to the task: Airworthiness Limitation Precautions (AMM 28-00-00/201), for important information on Critical Design Configuration Control Limitations (CDCCLs).

NOTE: This is applicable to Airworthiness Limitation 28-AWL-23.

(g) Apply a cap seal of BMS 5-142 sealant over the terminal of the bonding jumper and screw.

S 374-052

(7) Do this task to apply protective finishes to the bare areas of the rear spar: Apply the Corrosion Resistant Finish (Topcoat) (AMM 28-11-00/701).

NOTE: Re-apply the protective finishes to the rear spar where the electrical bonding probes removed the finishes.

(a) These are the protective finishes:

1) Alodine 600 coating

2) BMS 10-20 coating

BOEING PROPRIETARY - Copyright (C) - Unpublished Work - See title page for details.

S 914-053
(8) Do this task to apply Alodine 1200 coating to any bare areas of the actuator: Apply the Alodine Coating (AMM 51-21-04/701).

NOTE: Re-apply the protective coating to the actuator where the electrical bonding probe removed the finish and any bare metal areas around the bonding jumper installation that are not covered with sealant.

S 434-054
(9) Install the electrical connector on the actuator.

S 864-055
(10) Remove the DO-NOT-CLOSE tags and close these circuit breakers on the P11 panel:
(a) 11M13, LEFT JETT CONT
(b) 11M22, RIGHT JETT CONT

S 864-058
(11) Supply electrical power (AMM 24-22-00/201).

G. Operational Test of the Transfer Valve

S 714-006
(1) Do the Test of the Transfer Valve procedure (AMM 28-31-00/501).

H. Put the Airplane Back to Its Usual Condition

S 094-007

WARNING: USE THE PROCEDURE IN AMM 32-00-15/201 TO REMOVE THE DOOR LOCKS. THE DOORS OPEN AND CLOSE QUICKLY AND CAN CAUSE INJURY TO PERSONS OR DAMAGE TO EQUIPMENT.

(1) Remove the door locks from the landing gear doors and close the doors (AMM 32-00-15/201).

S 864-023
(2) Remove electrical power if it is not necessary (AMM 24-22-00/201).

BOEING PROPRIETARY - Copyright (C) - Unpublished Work - See title page for details.

FUEL JETTISON TRANSFER VALVE ACTUATOR - INSPECTION/CHECK

1. General
   A. This procedure contains a functional check of the bonding resistance between the fuel jettison transfer valve actuator and the rear spar.

TASK 28-31-04-706-001

2. Fuel Jettison Transfer Valve Actuator - Bonding Resistance Check
(Fig. 601, Fig. 601A)
   A. References
      (1) AMM 20-30-88/201, Airplane Structure Cleaning Solvents (Series 88)
      (2) AMM 32-00-15/201, Landing Gear Door Locks
      (3) AMM 32-00-20/201, Landing Gear Downlocks
      (4) SWPM 20-20-00, Electrical Bonding and Grounds
   B. Consumable Materials
      (1) G00034 Cotton Wiper, Process Cleaning Absorbent Wiper (cheesecloth, gauze) BMS 15-5
      (2) Sealant, BMS 5-142
      (3) B01008 Solvent - Series 88
   C. Access
      (1) Location Zones
          551 Rear Spar to MLG Support Beam (Left)
          651 Rear Spar to MLG Support Beam (Right)

   D. Procedure

      S 866-005
      (1) Open these circuit breakers, and attach DO-NOT-CLOSE tags:
          (a) On the overhead equipment panel, P11:
              1) 11M13, LEFT JETT CONT
              2) 11M22, RIGHT JETT CONT

      S 486-002

      WARNING: MAKE SURE THAT THE DOWNLOCKS ARE INSTALLED IN ALL OF THE LANDING GEAR. WITHOUT THE DOWNLOCKS, THE LANDING GEAR CAN RETRACT AND CAUSE INJURIES TO PERSONS AND DAMAGE TO EQUIPMENT.

      (2) Make sure the downlocks are installed in the nose and main landing gear (AMM 32-00-20/201).

      S 486-003

      WARNING: OBEY THE INSTALLATION PROCEDURE FOR THE DOOR LOCK. THE DOORS OPEN AND CLOSE QUICKLY. THE MOVEMENT OF THE DOORS CAN CAUSE INJURIES TO PERSONS AND DAMAGE TO EQUIPMENT.

BOEING PROPRIETARY - Copyright (C) - Unpublished Work - See title page for details.

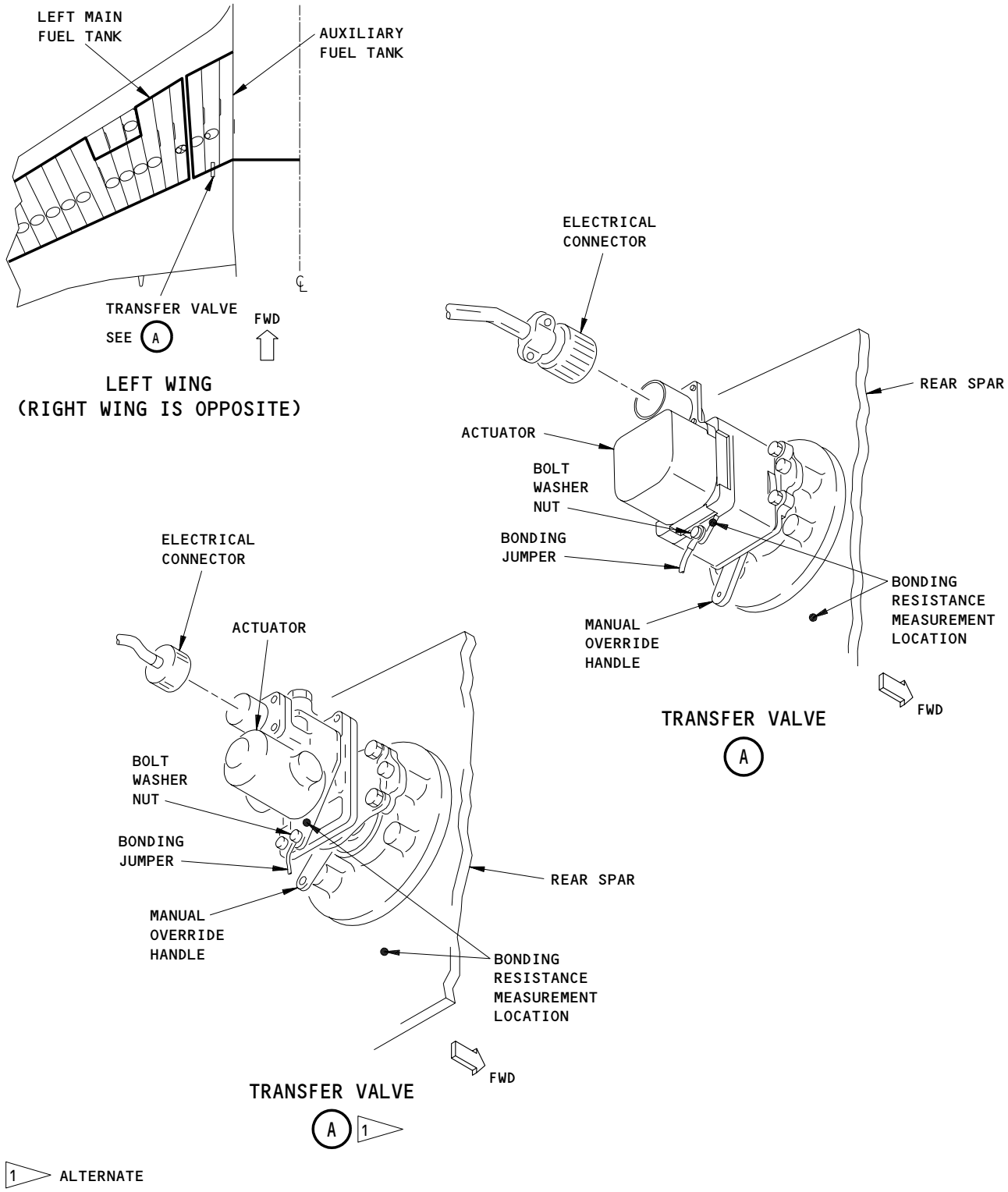

Fuel Jettison Transfer Valve Actuator Inspection
Figure 601

BOEING PROPRIETARY - Copyright (C) - Unpublished Work - See title page for details.

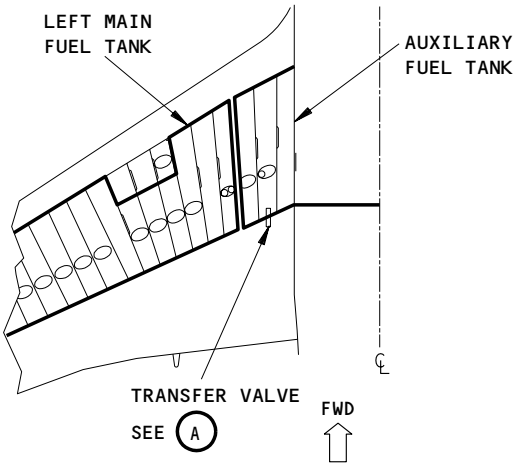

LEFT WING
(RIGHT WING IS OPPOSITE)

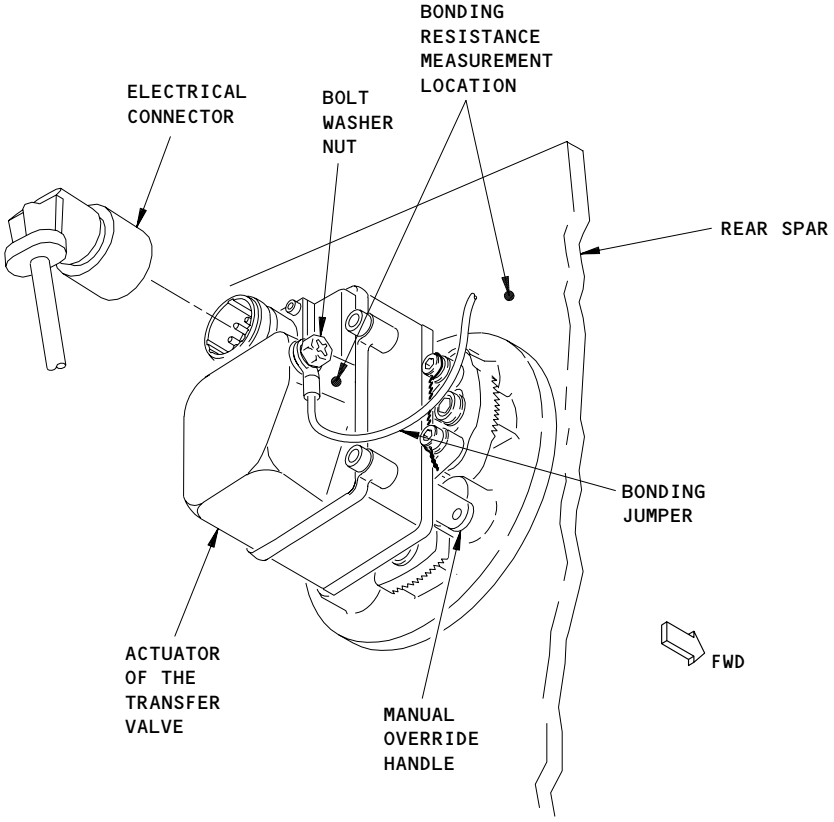

TRANSFER VALVE
A

Fuel Jettison Transfer Valve Actuator Inspection
Figure 601A

BOEING PROPRIETARY - Copyright (C) - Unpublished Work - See title page for details.

(3) Open the doors for the landing gear and install the door locks (AMM 32-00-15/201).

S 026-006

(4) Disconnect the electrical connector from the actuator of the transfer valve.

E. AIRPLANES WITHOUT ACTUATOR MA20A2027 OR MA30A1001; Bonding Resistance Check

S 026-007

(1) Remove the bonding jumper from the actuator.

S 766-008

(2) Measure the bonding resistance between the actuator and the rear spar (SWPM 20-20-00).
   (a) Make sure the resistance is 5 milliohms (0.005 ohm) or less.

S 426-009

(3) Connect the screw, washers, and nut to attach the bonding jumper to the actuator.

F. AIRPLANES WITH ACTUATOR MA20A2027 OR MA30A1001; Bonding Resistance Check

S 026-010

(1) Remove the bonding jumper from the actuator.

S 766-011

(2) Measure the bonding resistance between the actuator and the rear spar (SWPM 20-20-00).
   (a) Make sure the resistance is 5 milliohms (0.005 ohm) or less.

S 426-012

(3) Do these steps to install the bonding jumper to the actuator:
   (a) Clean the contact surfaces with a cotton wiper soaked with Series 88 solvent (AMM 20-30-88/201).
      1) Clean and dry the surface until the cotton wiper stays clean.
   (b) Apply a thin continuous layer of sealant to both surfaces of the bonding jumper and the washers.
      1) Use BMS 5-142 sealant for the faying surface seal.
   (c) Install the screw, washers, and nut to attach the bonding jumper to the actuator.
      1) AIRPLANES WITHOUT ACTUATOR MA30A1001; Tighten the screw to 20 in-lb (2.3 Nm).

BOEING PROPRIETARY - Copyright (C) - Unpublished Work - See title page for details.

2) AIRPLANES WITH ACTUATOR MA30A1001;
Tighten the screw to 35 in-lb (4.0 Nm).

(d) Measure the electrical bonding resistance between the upper housing of the actuator and the attached bonding jumper terminal (SWPM 20-20-00).

1) Do not touch the screw when you make the bonding resistance measurement.

2) Make sure the bonding reisistance is 0.001 ohm (1 milliohm) or less.

NOTE: CDCCL - Refer to the task: Airworthiness Limitation Precautions (AMM 28-00-00/201), for important information on Critical Design Configuration Control Limitations (CDCCLs).

NOTE: This is applicable to Airworthiness Limitation 28-AWL-23.

(e) Apply a cap seal of BMS 5-142 sealant over the terminal of the bonding jumper and screw.

G. Put the Airplane Back to Its Usual Condition

S 426-013

(1) Connect the electrical connector to the actuator.

S 866-014

(2) Remove the DO-NOT-CLOSE tags, and close these circuit breakers:

(a) On the P11 panel:

1) 11M13, LEFT JETT CONT

2) 11M22, RIGHT JETT CONT

S 086-004

WARNING: OBEY THE REMOVAL PRECEDURE FOR THE DOOR LOCKS. THE DOORS OPEN AND CLOSE QUICKLY. THE MOVEMENT OF THE DOORS CAN CAUSE INJURIES TO PERSONS AND DAMAGE TO EQUIPMENT.

(3) Remove the door locks from the main gear doors and close the doors (AMM 32-00-15/201).

S 086-015

(4) When the maintenance and servicing of the airplanes is complete, remove the downlocks from the landing gear (AMM 32-00-20/201).

BOEING PROPRIETARY - Copyright (C) - Unpublished Work - See title page for details.

FUEL JETTISON NOZZLE VALVE ACTUATOR - REMOVAL/INSTALLATION

1. General
   A. There are two nozzle valves for the fuel jettison system. Each nozzle valve has three parts: the actuator, the adapter shaft, and the valve body. The adapter shaft and valve body are installed on the rear spar in the main fuel tank. The adapter shaft and valve body are found inboard of rib 28 and attach to the fueling manifold. The actuator is installed on the rear spar out of the main fuel tank.
   B. The actuator can be replaced with fuel in the fuel tanks.
   C. This procedure contains two tasks. The first task removes the actuator of the nozzle valve. The second task installs the actuator of the nozzle valve.
   D. The procedure to remove and install the valve body and the adapter shaft is in AMM 28-31-03/401.

TASK 28-31-05-004-001

2. Remove the Actuator of the Nozzle Valve (Fig. 401)
   A. References
      (1) AMM 27-51-00/201, Flight Controls
   B. Access
      (1) Location Zones
          541 Main Tank - Outboard of Rib No. 10 (Left)
          641 Main Tank - Outboard of Rib No. 10 (Right)

   C. Procedure

      S 864-018
      (1) Open these circuit breakers on the overhead circuit breaker panel, P11, and attach DO-NOT-CLOSE tags:
          (a) 11M14, LEFT JETT NOZZLE VALVE
          (b) 11M23, RIGHT JETT NOZZLE VALVE

      S 864-019

      WARNING: DO THE DEACTIVATION PROCEDURE FOR THE TRAILING EDGE FLAPS. ACCIDENTAL OPERATION OF THE TRAILING EDGE FLAPS COULD CAUSE INJURY TO PERSONS.

      (2) Do the deactivation procedure for the trailing edge flaps (AMM 27-51-00/201).

      S 014-002
      (3) Get access to the actuator of the nozzle valve on the rear spar of the applicable wing.

          NOTE: The actuator is near the outboard edge of the outboard trailing edge flap.

BOEING PROPRIETARY - Copyright (C) - Unpublished Work - See title page for details.

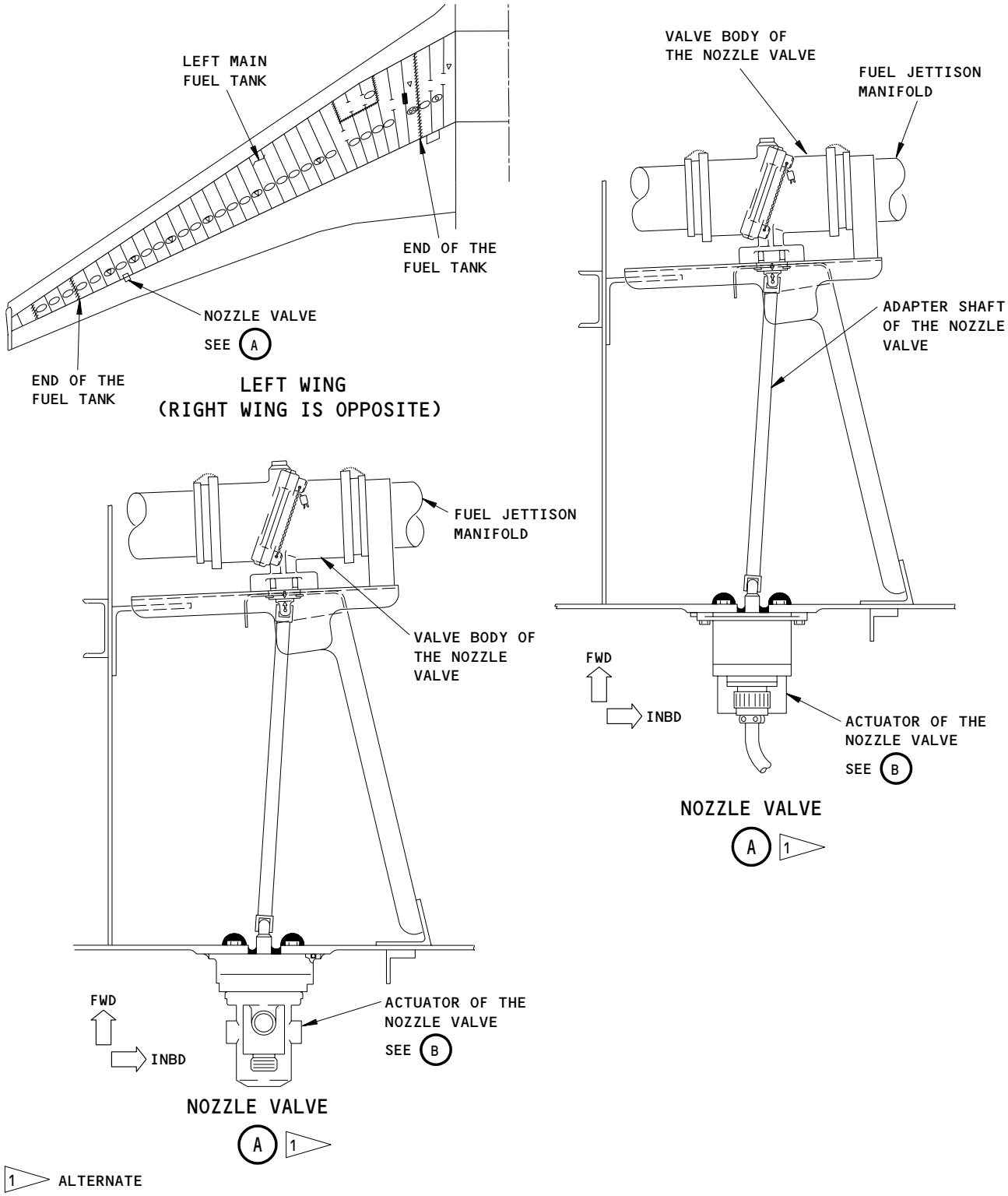

Fuel Jettison Nozzle Valve Actuator
Figure 401 (Sheet 1)

BOEING PROPRIETARY - Copyright (C) - Unpublished Work - See title page for details.

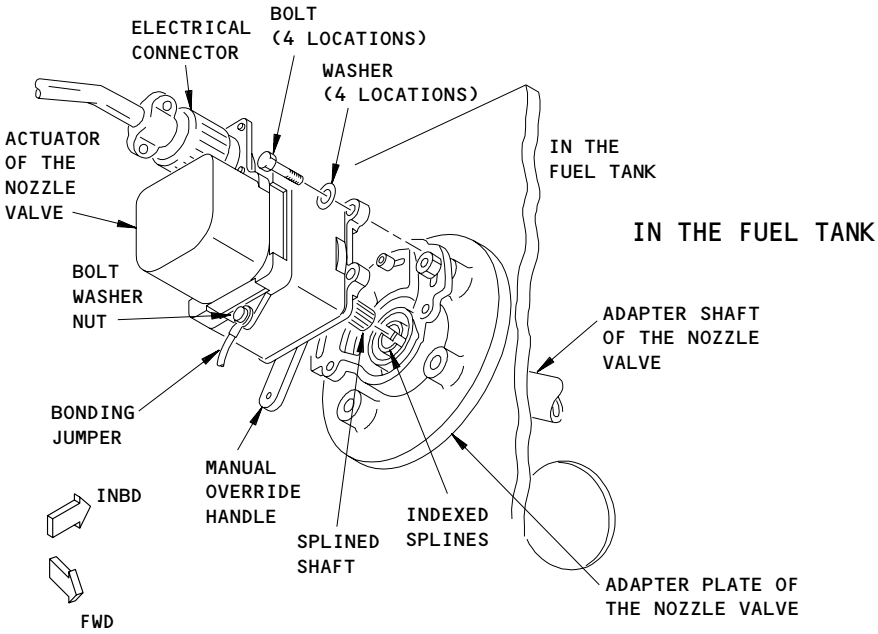

ACTUATOR OF THE NOZZLE VALVE

B 1

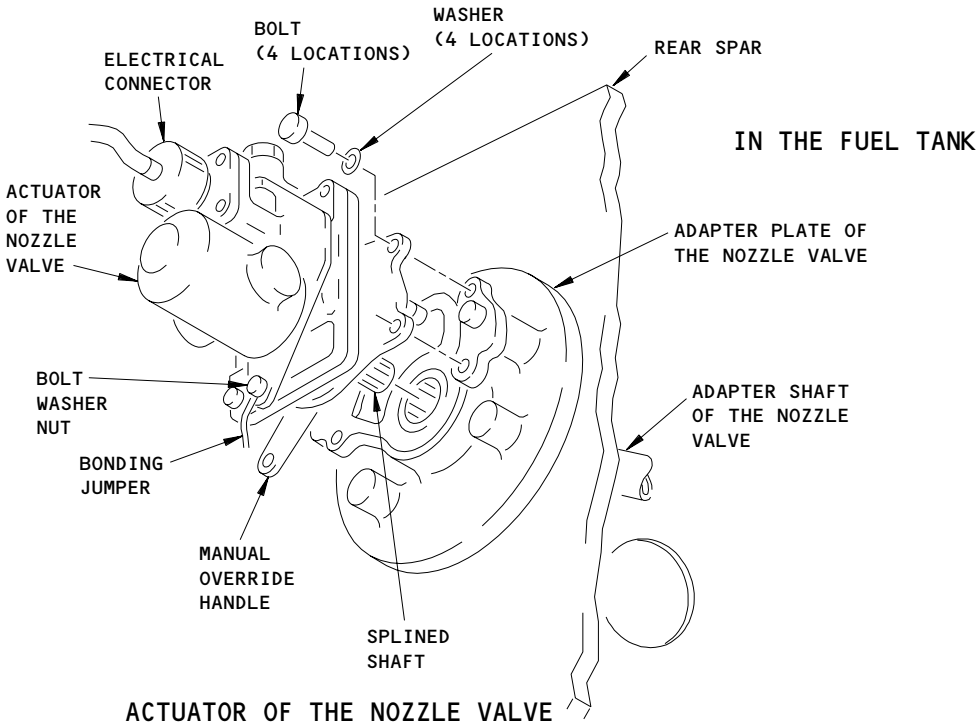

ACTUATOR OF THE NOZZLE VALVE

B 1

1 ALTERNATE

Fuel Jettison Nozzle Valve Actuator
Figure 401 (Sheet 2)

BOEING PROPRIETARY - Copyright (C) - Unpublished Work - See title page for details.

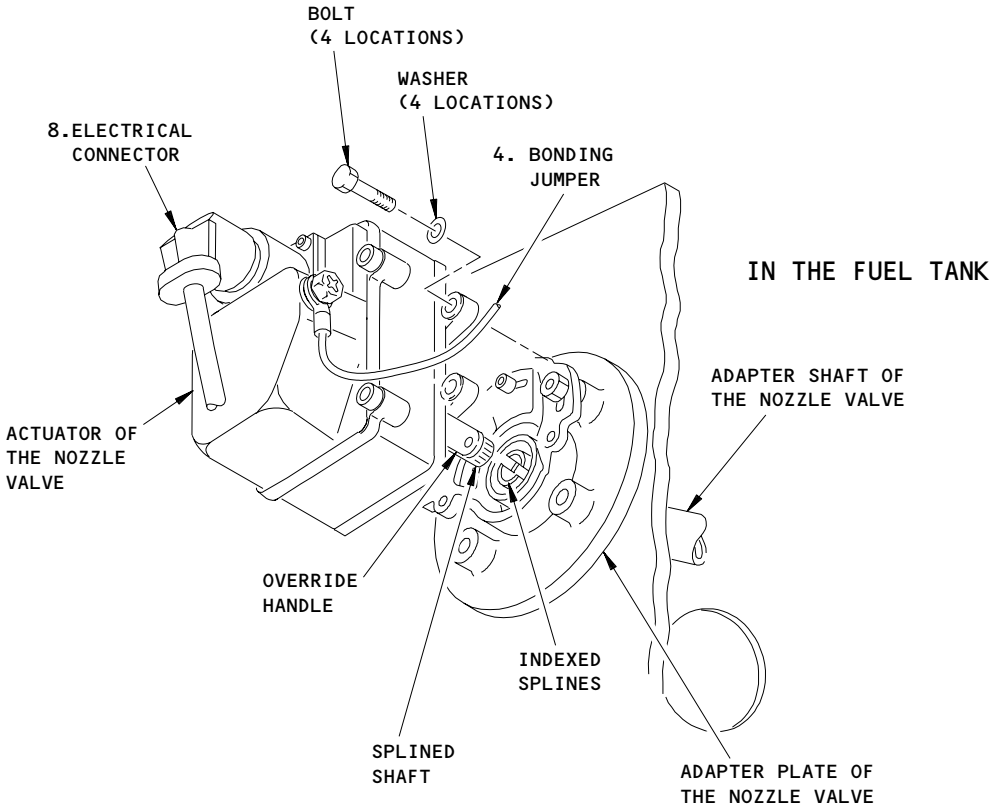

ACTUATOR OF THE NOZZLE VALVE

B 2

2 RECOMMENDED

Fuel Jettison Nozzle Valve Actuator
AFigure 401 (Sheet 3)

EFFECTIVITY
AIRPLANES WITH ACTUATOR MA20A2027 OR
MA30A1001

1364781

BOEING PROPRIETARY - Copyright (C) - Unpublished Work - See title page for details.

S 034-003
(4) Remove the electrical connector from the actuator (View B).

S 864-023
(5) Move the manual override handle on the actuator to the CLOSED position.

S 034-004
(6) Remove the bolt, washer and nut to disconnect the bonding jumper from the actuator.

S 024-005
(7) Remove the bolts and washers that attach the actuator to the adapter plate of the nozzle valve.

S 024-006
(8) Disengage the splined shaft from the adapter plate to remove the actuator.

TASK 28-31-05-404-007
3. Install the Actuator of the Nozzle Valve (Fig. 401)
A. References
(1) AMM 20-30-88/201, Airplane Structure Cleaning Solvents (Series 88)
(2) AMM 20-30-92/201, Airplane Structure Cleaning Solvents (Series 92)
(3) AMM 24-22-00/201, Electrical Power Control
(4) AMM 27-51-00/201, Flight Controls
(5) AMM 28-11-00/701, Fuel Tanks
(6) AMM 28-31-00/501, Fuel Jettison System
(7) AMM 51-21-04/701, Alodine Coating
(8) SWPM 20-20-00, Electrical Bonding and Grounds
B. Equipment
(1) Brush - Soft Bristle
(2) BAC5000 - Sealant Removal Tool
C. Consumable Materials
(1) C00064 Coating - Chemical Conversion Coating for Aluminum or Aluminum Alloys, MIL-C-5541 (MIL-C-81706) - Alodine 600 and 1200
(2) G00034 Cotton Wiper, Process Cleaning Absorbent Wiper (cheesecloth, gauze) BMS15-5
(3) C00307 BMS 10-20, Type II Class A - Finish, Corrosion Resistant
(4) G50021 - Scotch-Brite 96W pad
(5) Sealant, BMS 5-45 Class C

BOEING PROPRIETARY - Copyright (C) - Unpublished Work - See title page for details.

(6) Sealant, BMS 5-95 Class B or C
(7) Sealant, BMS 5-142
(8) B01008 Solvent - Series 88
(9) B01012 Solvent - Series 92

D. Access
(1) Location Zones
541 Main Tank - Outboard of Rib No. 10 (Left)
641 Main Tank - Outboard of Rib No. 10 (Right)

E. AIRPLANES WITHOUT ACTUATOR MA20A2027 OR MA30A1001;
Install the Actuator of the Nozzle Valve

S 864-008
(1) Move the manual override handle on the actuator to the CLOSED position (View B).

S 424-009
(2) Put the actuator in position against the adapter plate.

S 214-010
(3) Make sure the splined shaft engages in the adapter plate.

S 424-011
(4) Install the bolts and washers to attach the actuator to the adapter plate.

S 434-012
(5) Install the lockwire on the bolts.

S 434-013
(6) Install the bolt, washer and nut to connect the bonding jumper to the actuator.

S 434-014
(7) Install the electrical connector on the actuator.

S 224-015
(8) Make sure the bonding resistance between the actuator and the airplane structure is not more than 0.005 ohm (SWPM 20-20-00).

S 864-016
(9) Remove the DO-NOT-CLOSE tags and close these circuit breakers on the P11 panel:
(a) 11M14, LEFT JETT NOZZLE VALVE
(b) 11M23, RIGHT JETT NOZZLE VALVE

S 864-020
(10) Supply electrical power (AMM 24-22-00/201).

BOEING PROPRIETARY - Copyright (C) - Unpublished Work - See title page for details.

F. AIRPLANES WITH ACTUATOR MA20A2027 OR MA30A1001;
Install the Actuator of the Nozzle Valve

S 144-041

(1) Remove the old sealant and clean the actuator, index plate, and fasteners (if reused).

(a) Use the sealant removal tool and sealant removal tool handle (or equivalent) to remove old sealant from the actuator and index plate.

WARNING: DO NOT GET SOLVENTS IN YOUR MOUTH, YOUR EYES, OR ON YOUR SKIN. DO NOT BREATHE THE FUMES FROM SOLVENTS. SOLVENTS ARE DANGEROUS MATERIALS. SOLVENTS CAN BE FLAMMABLE. OBEY THE MATERIAL SAFETY DATA SHEETS (MSDS) FOR SOLVENTS. OBEY LOCAL REGULATIONS FOR THE CORRECT PROCEDURES TO USE OR DISCARD SOLVENTS. SOLVENTS CAN CAUSE INJURIES TO PERSONNEL AND DAMAGE TO EQUIPMENT.

(b) To remove the remaining sealant, grease, oil, dirt, and other contamination from the components, use one of these items soaked with Series 92 solvent (AMM 20-30-92/201).

1) soft bristle brush
2) cotton wiper
3) Scotch-Brite 96W pad

S 424-042

(2) Do these steps to prepare the actuator and the index plate for a sealed electrical faying surface bond (SWPM 20-20-00):

WARNING: DO NOT GET SOLVENTS IN YOUR MOUTH, YOUR EYES, OR ON YOUR SKIN. DO NOT BREATHE THE FUMES FROM SOLVENTS. SOLVENTS ARE DANGEROUS MATERIALS. SOLVENTS CAN BE FLAMMABLE. OBEY THE MATERIAL SAFETY DATA SHEETS (MSDS) FOR SOLVENTS. OBEY LOCAL REGULATIONS FOR THE CORRECT PROCEDURES TO USE OR DISCARD SOLVENTS. SOLVENTS CAN CAUSE INJURIES TO PERSONNEL AND DAMAGE TO EQUIPMENT.

(a) Final clean the contact surfaces with a cotton wiper soaked with Series 88 solvent (AMM 20-30-88/201).
(b) Rub dry with a clean, dry cotton wiper.
(c) Continue to clean and dry the surface until the dry cotton wiper stays clean.

BOEING PROPRIETARY - Copyright (C) - Unpublished Work - See title page for details.

(d) Apply a thin continuous layer of sealant to the actuator contact areas (four locations).

NOTE: CDCCL - Refer to the task: Airworthiness Limitation Precautions (AMM 28-00-00/201), for important information on Critical Design Configuration Control Limitations (CDCCLs).

NOTE: This is applicable to Airworthiness Limitation 28-AWL-23.

1) Use BMS 5-45 Class C or BMS 5-95 Class B or C sealant for the faying surface seal.
2) Make sure the sealant layer is approximately 0.005 inch (0.127 mm) thick.

(e) Apply sealant to the shank and the threads of the bolts.

NOTE: CDCCL - Refer to the task: Airworthiness Limitation Precautions (AMM 28-00-00/201), for important information on Critical Design Configuration Control Limitations (CDCCLs).

NOTE: This is applicable to Airworthiness Limitation 28-AWL-23.

1) Use BMS 5-45 Class C or BMS 5-95 Class B or C sealant for the wet installation of the bolts.

NOTE: Use the same sealant on the bolts that was used for the faying surface seal.

2) Make sure the sealant applied to the fasteners is approximately 0.060 inch (1.52 mm) thick.

S 424-043

(3) Do these steps to install the actuator to the index plate.
(a) Make sure the manual override handle is in the CLOSED position.
(b) Align the splined shaft with the adapter shaft.
(c) Make sure the two spaces for teeth on the adapter shaft align with the splined shaft.
(d) Put the splined shaft into the actuator shaft.

NOTE: The contact areas of the actuator automatically align with the mounting points on the index plate.

(e) Install the actuator securing bolts and washers that attach the actuator to the index plate.

NOTE: Lockwire is not necessary for the actuator securing screws.

BOEING PROPRIETARY - Copyright (C) - Unpublished Work - See title page for details.

(f) Tighten the bolts to 20 in-lb (2.3 Nm).
(g) Make sure the sealant is continuously squeezed out along the edges of the contact surfaces.
(h) If there are gaps, bubbles or voids in the sealant squeeze out, then disassemble and apply more sealant.
(i) Shape the squeezed out sealant into a fillet seal.
(j) As an option, remove the extra squeezed out sealant.

NOTE: Make sure the sealant that remains is flush with the mating part edges.

S 764-044
(4) Measure the electrical bonding resistance between the upper housing of the actuator (at the bare metal bonding jumper installation location) and the rear spar (SWPM 20-20-00).
(a) Do this measurement with the bonding jumper and the electrical connector disconnected.
(b) Make sure the bonding jumper does not touch the actuator during the bonding measurement.
(c) Make sure the bonding resistance is 0.0025 ohm (2.5 milliohms) or less.

NOTE: CDCCL - Refer to the task: Airworthiness Limitation Precautions (AMM 28-00-00/201), for important information on Critical Design Configuration Control Limitations (CDCCLs).

NOTE: This is applicable to Airworthiness Limitation 28-AWL-23.

S 764-045
(5) Measure the electrical bonding resistance between the loose end of the bonding jumper and the rear spar (SWPM 20-20-00).
(a) Make sure the bonding resistance is 0.0015 ohm (1.5 milliohms) or less.

NOTE: CDCCL - Refer to the task: Airworthiness Limitation Precautions (AMM 28-00-00/201), for important information on Critical Design Configuration Control Limitations (CDCCLs).

NOTE: This is applicable to Airworthiness Limitation 28-AWL-23.

BOEING PROPRIETARY - Copyright (C) - Unpublished Work - See title page for details.

S 424-046

(6) Do these steps to install the bonding jumper to the actuator:
  (a) Final clean the contact surfaces with a cotton wiper soaked with Series 88 solvent (AMM 20-30-88/201).
    1) Rub dry with a clean, dry cotton wiper.
    2) Continue to clean and dry the surface until the dry cotton wiper stays clean.
  (b) Apply a thin continuous layer of sealant to both surfaces of the bonding jumper and the washers.
    1) Use BMS 5-142 sealant for the faying surface seal.
    2) Make sure the sealant layer is approximately 0.005 inch (0.127 mm) thick.
  (c) Install the screw, washers, and nut to attach the bonding jumper to the actuator.
  (d) AIRPLANES WITHOUT ACTUATOR MA30A1001;
  Tighten the screw to 20 in-lb (2.3 Nm).
  (e) AIRPLANES WITH ACTUATOR MA30A1001;
  Tighten the screw to 35 in-lb (4.0 Nm).
  (f) Measure the electrical bonding resistance between the upper housing of the actuator and the attached bonding jumper terminal (SWPM 20-20-00).
    1) Do not touch the screw when you make the bonding measurement.
    2) Make sure the bonding resistance is 0.001 ohm (1 milliohm) or less.

    NOTE: CDCCL - Refer to the task: Airworthiness Limitation Precautions (AMM 28-00-00/201), for important information on Critical Design Configuration Control Limitations (CDCCLs).

    NOTE: This is applicable to Airworthiness Limitation 28-AWL-23.

  (g) Apply a cap seal of BMS 5-142 sealant over the terminal of the bonding jumper and screw.

S 374-047

(7) Do this task to apply protective finishes to the bare areas of the rear spar: Apply the Corrosion Resistant Finish (Topcoat) (AMM 28-11-00/701).

NOTE: Re-apply the protective finishes to the rear spar where the electrical bonding probes removed the finishes.

  (a) These are the protective finishes:
    1) Alodine 600 coating
    2) BMS 10-20 coating

BOEING PROPRIETARY - Copyright (C) - Unpublished Work - See title page for details.

S 914-048
(8) Do this task to apply Alodine 1200 coating to any bare areas of the actuator: Apply the Alodine Coating (AMM 51-21-04/701).

NOTE: Re-apply the protective coating to the actuator where the electrical bonding probe removed the finish and any bare metal areas around the bonding jumper installation that are not covered with sealant.

S 434-049
(9) Install the electrical connector on the actuator.

S 864-050
(10) Remove the DO-NOT-CLOSE tags and close these circuit breakers on the P11 panel:
(a) 11M14, LEFT JETT NOZZLE VALVE
(b) 11M23, RIGHT JETT NOZZLE VALVE

S 864-053
(11) Supply electrical power (AMM 24-22-00/201).

G. Operational Test of the Nozzle Valve

S 714-021
(1) Do the Test of the Left or Right Nozzle Valve in the Air Mode and in the Ground Mode (AMM 28-31-00/501).

H. Put the Airplane Back to Its Usual Condition

S 864-022

WARNING: DO THE ACTIVATION PROCEDURE FOR THE TRAILING EDGE FLAPS. ACCIDENTAL OPERATION OF THE TRAILING EDGE FLAPS COULD CAUSE INJURY TO PERSONS.

(1) Do the activation procedure for the trailing edge flaps (AMM 27-51-00/201).

S 864-017
(2) Remove electrical power if it is not necessary (AMM 24-22-00/201).

BOEING PROPRIETARY - Copyright (C) - Unpublished Work - See title page for details.

FUEL JETTISON NOZZLE VALVE ACTUATOR - INSPECTION/CHECK

1. General
   A. This procedure contains a functional check of the bonding resistance between the structure and the fuel jettison nozzle valve actuator.

TASK 28-31-05-006-001

2. Fuel Jettison Nozzle Valve Actuator - Bonding Resistance Check
   (Fig. 601, 601A)
   A. Equipment
      (1) Bonding Meter - Use one of these:
         (a) Bonding Meter - T477W
             Avtron Manufacturing Co.
             Cleveland, OH
         (b) Bonding Meter - Model M1
             (Serial Number A000012 and subsequent)
             BCD Electronics Ltd.
             Vancouver, Canada
   B. Consumable Materials
      (1) G00034 Cotton Wiper, Process Cleaning Absorbent Wiper (Cheesecloth, gauze) BMS 15-5
      (2) Sealant, BMS 5-142
      (3) B01008 Solvent - Series 88
   C. References
      (1) AMM 06-44-00/201, Wings Access Doors
      (2) AMM 20-30-88/201, Airplane Structure Cleaning Solvents (Series 88)
      (3) AMM 27-51-00/201, Flight Controls
      (4) SWPM 20-20-00, Electrical Bonding and Grounds
   D. Access
      (1) Location Zones
          561 Rear Spar to Trailing Edge (Left)
          661 Rear Spar to Trailing Edge (Right)

   E. Prepare for the Procedure

      S 866-061

      WARNING: DO THE DEACTIVATION PROCEDURE FOR THE TRAILING EDGE FLAPS. ACCIDENTAL OPERATION OF THE TRAILING EDGE FLAPS COULD CAUSE INJURY TO PERSONS.

      (1) Deactivate the trailing edge flaps (AMM 27-51-00/201).

BOEING PROPRIETARY - Copyright (C) - Unpublished Work - See title page for details.

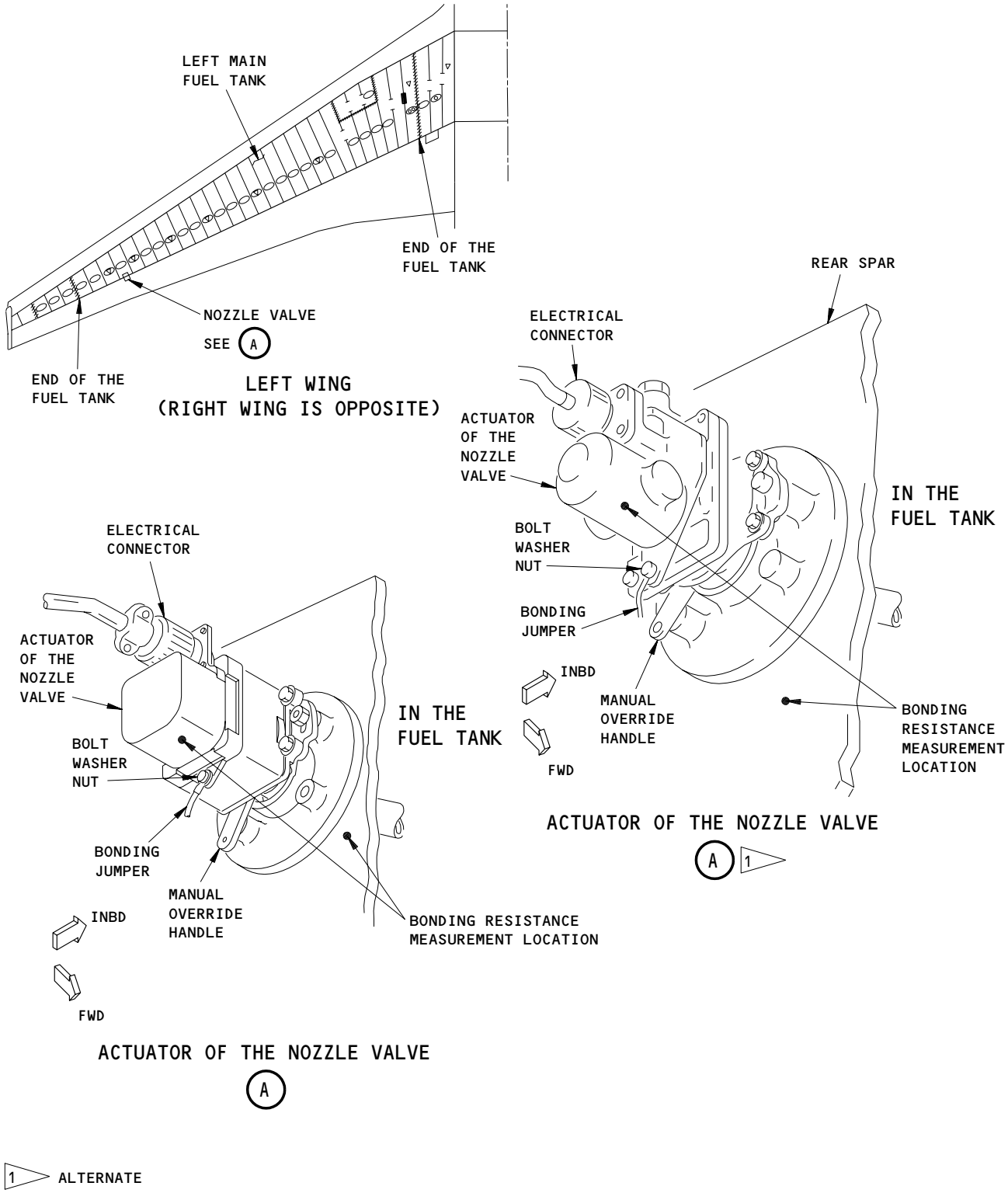

Fuel Jettison Nozzle Valve Actuator Inspection
Figure 601

BOEING PROPRIETARY - Copyright (C) - Unpublished Work - See title page for details.

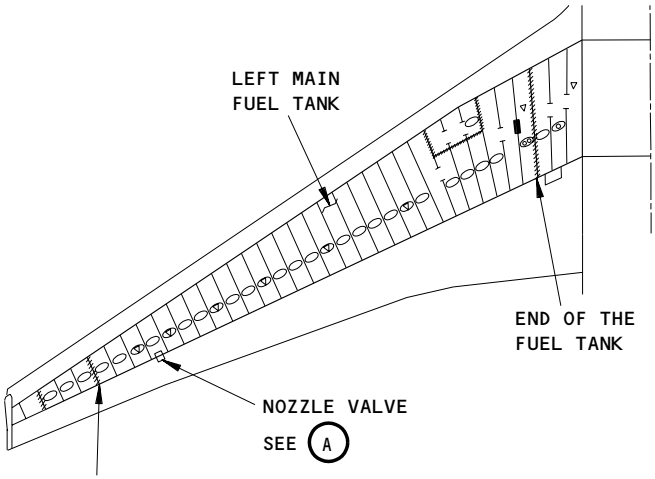

LEFT WING
(RIGHT WING IS OPPOSITE)

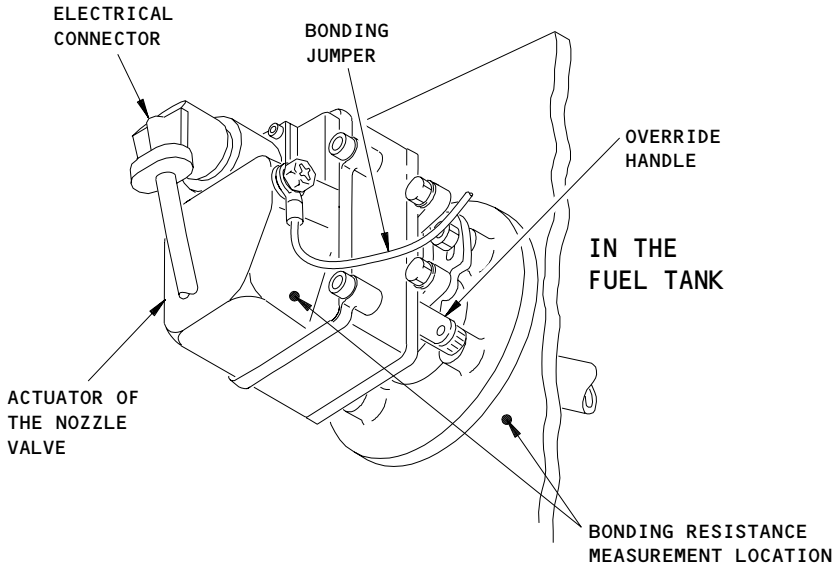

ACTUATOR OF THE NOZZLE VALVE

A

Fuel Jettison Nozzle Valve Actuator Inspection
Figure 601A

EFFECTIVITY
AIRPLANES WITH ACTUATOR MA20A2027 OR
MA30A1001

1400158

BOEING PROPRIETARY - Copyright (C) - Unpublished Work - See title page for details.

S 866-048
(2) Open these circuit breakers and attach DO-NOT-CLOSE tags:
(a) On the overhead circuit breaker panel, P11:
1) 11M14, LEFT JETT NOZZLE VALVE
2) 11M23, RIGHT JETT NOZZLE VALVE

S 016-049
(3) Open the applicable access panel (AMM 06-44-00/201).

S 026-043
(4) Disconnect the electrical connector from the actuator.

F. AIRPLANES WITHOUT ACTUATOR MA20A2027 OR MA30A1001;
Bonding Resistance Check

S 026-044
(1) Remove the bolt, washer, and nut to disconnect the bonding jumper from the actuator.

S 766-045
(2) Measure the bonding resistance between the actuator and the rear spar (SWPM 20-20-00).
(a) Make sure the bonding resistance is 5 milliohms (0.005 ohm) or less.

S 426-046
(3) Install the bolt, washers, and nut to connect the bonding jumper to the actuator.

G. AIRPLANES WITH ACTUATOR MA20A2027 OR MA30A1001;
Bonding Resistance Check

S 026-051
(1) Remove the bolt, washer, and nut to disconnect the bonding jumper from the actuator.

S 766-050
(2) Measure the bonding resistance between the actuator and the rear spar (SWPM 20-20-00).
(a) Make sure the bonding resistance is 5 milliohms (0.005 ohm) or less.

BOEING PROPRIETARY - Copyright (C) - Unpublished Work - See title page for details.

S 426-052

(3) Do these steps to install the bonding jumper to the actuator.

(a) Clean the contact surfaces with a cotton wiper soaked with Series 88 solvent (AMM 20-30-88/201).

1) Clean and dry the surface until the cotton wiper stays clean.

(b) Apply a thin continuous layer of sealant to both surfaces of the bonding jumper and the washers.

1) Use BMS 5-142 sealant for the faying surface seal.

(c) Install the screw, washers, and nut to attach the bonding jumper to the actuator.

1) AIRPLANES WITHOUT ACTUATOR MA30A1001;
Tighten the screw to 20 in-lb (2.3 Nm).

2) AIRPLANES WITH ACTUATOR MA30A1001;
Tighten the screw to 35 in-lb (4.0 Nm).

(d) Measure the bonding resistance between the upper housing of the actuator and the attached bonding jumper terminal (SWPM 20-20-00).

1) Do not touch the screw when you make the bonding measurement.

2) Make sure the bonding resistance is 0.001 ohm (1 milliohm) or less.

NOTE: CDCCL - Refer to the task: Airworthiness Limitation Precautions (AMM 28-00-00/201), for important information on Critical Design Control Configuration Limitations (CDCCLs).

NOTE: This is applicable to Airworthiness Limitation 28-AWL-23.

3) Apply a cap seal of BMS 5-142 sealant over the terminal of the bonding jumper and the screw.

H. Put the Airplane Back to Its Usual Condition

S 426-053

(1) Connect the electrical connector on the actuator.

S 416-055

(2) Close the applicable access panel (AMM 06-44-00/201).

S 866-058

(3) Remove the DO-NOT-CLOSE tags and close these circuit breakers:

(a) On the overhead circuit breaker panel, P11:

1) 11M14, LEFT JETT NOZZLE VALVE

2) 11M23, RIGHT JETT NOZZLE VALVE

BOEING PROPRIETARY - Copyright (C) - Unpublished Work - See title page for details.

S 866-054

WARNING: DO THE ACTIVATION PROCEDURE FOR THE TRAILING EDGE FLAPS. ACCIDENTAL OPERATION OF THE TRAILING EDGE FLAPS COULD CAUSE INJURY TO PERSONS.

(4) Do the activation procedure for the trailing edge flaps (AMM 27-51-00/201).

BOEING PROPRIETARY - Copyright (C) - Unpublished Work - See title page for details.

FUEL JETTISON TRANSFER VALVE - REMOVAL/INSTALLATION

1. General
   A. There are two transfer valves for the fuel jettison system. Each transfer valve has three parts: the actuator, the adapter shaft, and the valve body. The actuator is installed on the rear spar of each wing, out of the fuel tank. The adapter shaft and the valve body are installed on the rear spar of each wing, in the fuel tank. The transfer valve is between ribs 1 and 2.
   B. This procedure contains five tasks. The first task removes the valve body of the transfer valve. The second task installs the valve body of the transfer valve. The third task removes the adapter shaft of the transfer valve. The fourth task installs the adapter shaft of the transfer valve. The fifth task aligns the adapter shaft of the fuel jettison transfer valve.
   C. The procedure to remove and install the actuator of the transfer valve is in AMM 28-31-04/401.

TASK 28-31-06-004-049

2. Remove the Valve Body of the Transfer Valve (Fig. 401)
   A. References
      (1) AMM 28-11-00/201, Fuel Tanks (Purging and Entry)
      (2) AMM 28-11-02/401, Auxiliary Tank Access Door
      (3) AMM 28-26-00/201, Defueling
      (4) AMM 32-00-15/201, Landing Gear Door Locks
      (5) AMM 32-00-20/201, Landing Gear Downlocks
   B. Access
      (1) Location Zones
          531 Center Auxiliary Tank (Left)
          631 Center Auxiliary Tank (Right)

      (2) Access Panels
          531BB Auxiliary Tank Access Door (Left)
          631BB Auxiliary Tank Access Door (Right)

   C. Procedure

      S 864-066
      (1) SAS 150, 152-154 POST-SB 28-27;
          SAS 050-149, 155-999;
          MTH 277-999;
          Open these circuit breakers on the overhead circuit breaker panel, P11, and attach DO-NOT-CLOSE tags:
          (a) 11M13, LEFT JETT CONT
          (b) 11M22, RIGHT JETT CONT

      S 214-002
      (2) Make sure the downlocks are installed on the nose and main landing gear (AMM 32-00-20/201).

BOEING PROPRIETARY - Copyright (C) - Unpublished Work - See title page for details.

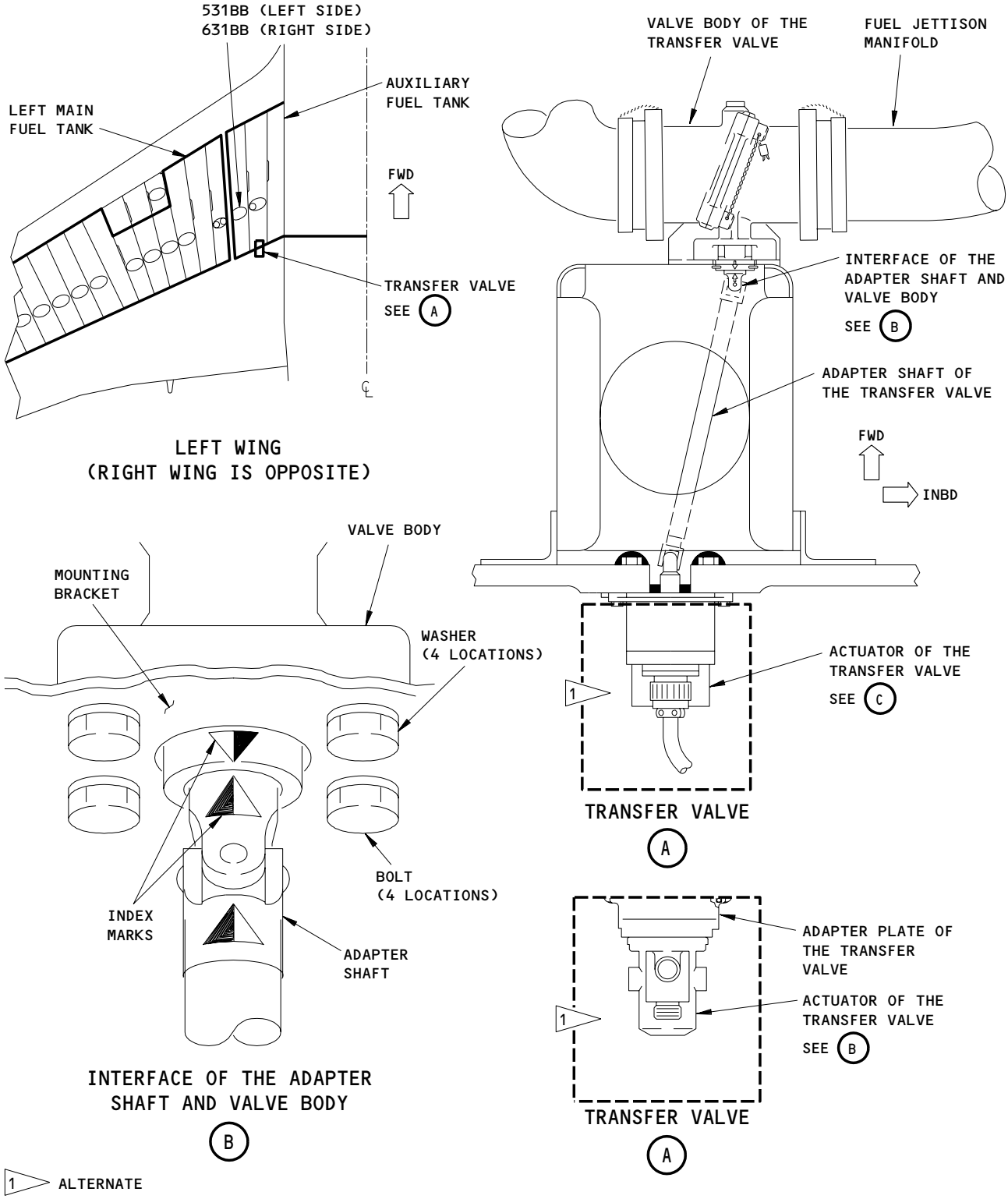

Fuel Jettison Transfer Valve
Figure 401 (Sheet 1)

BOEING PROPRIETARY - Copyright (C) - Unpublished Work - See title page for details.

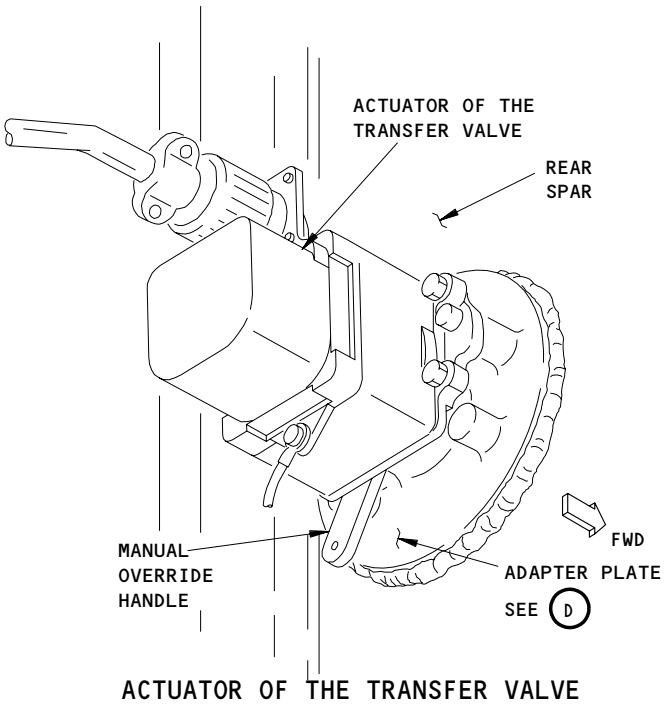

ACTUATOR OF THE TRANSFER VALVE

C 1

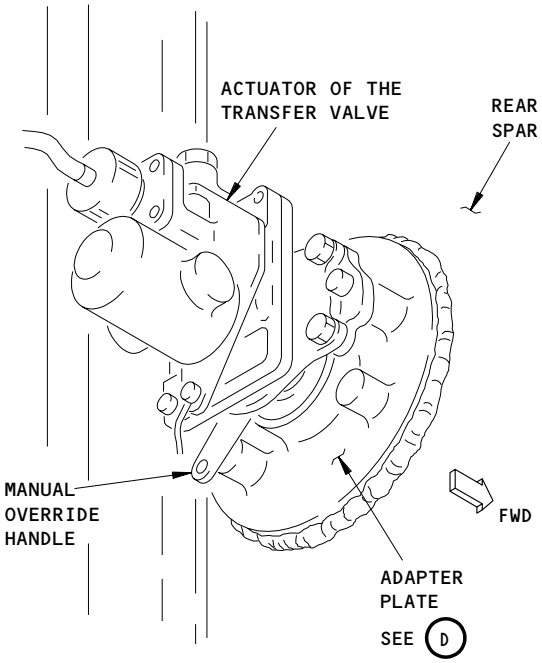

ACTUATOR OF THE TRANSFER VALVE

C 1

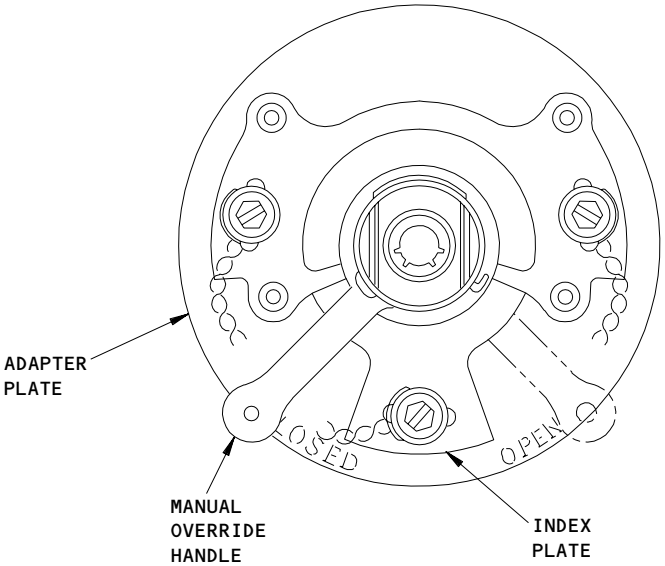

ADAPTER PLATE

D

Fuel Jettison Transfer Valve
Figure 401 (Sheet 2)

BOEING PROPRIETARY - Copyright (C) - Unpublished Work - See title page for details.

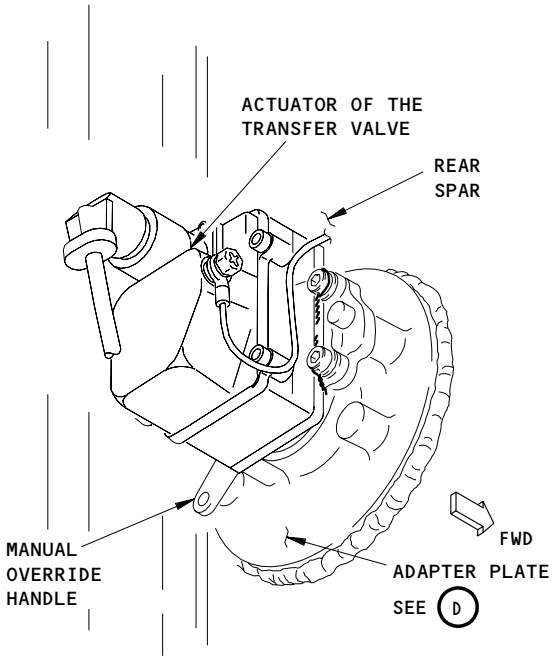

ACTUATOR OF THE TRANSFER VALVE

C 2

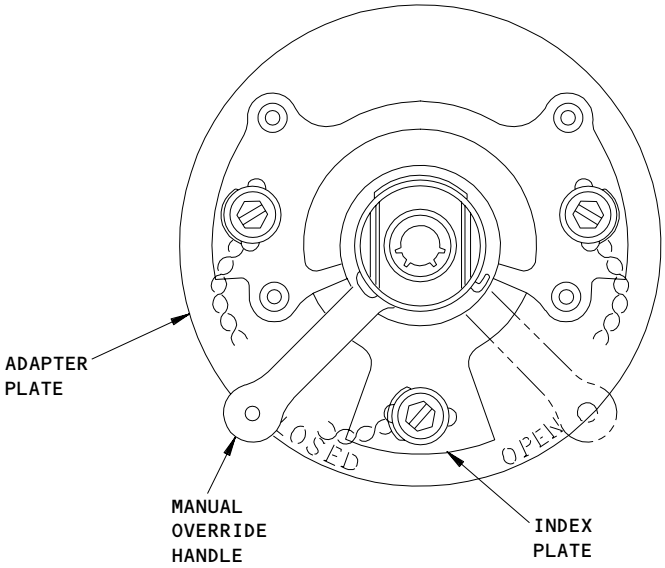

ADAPTER PLATE

D

2 RECOMMENDED

Fuel Jettison Transfer Valve
Figure 401 (Sheet 3)

EFFECTIVITY
AIRPLANES WITH ACTUATOR MA20A2027 OR MA30A1001

BOEING PROPRIETARY - Copyright (C) - Unpublished Work - See title page for details.

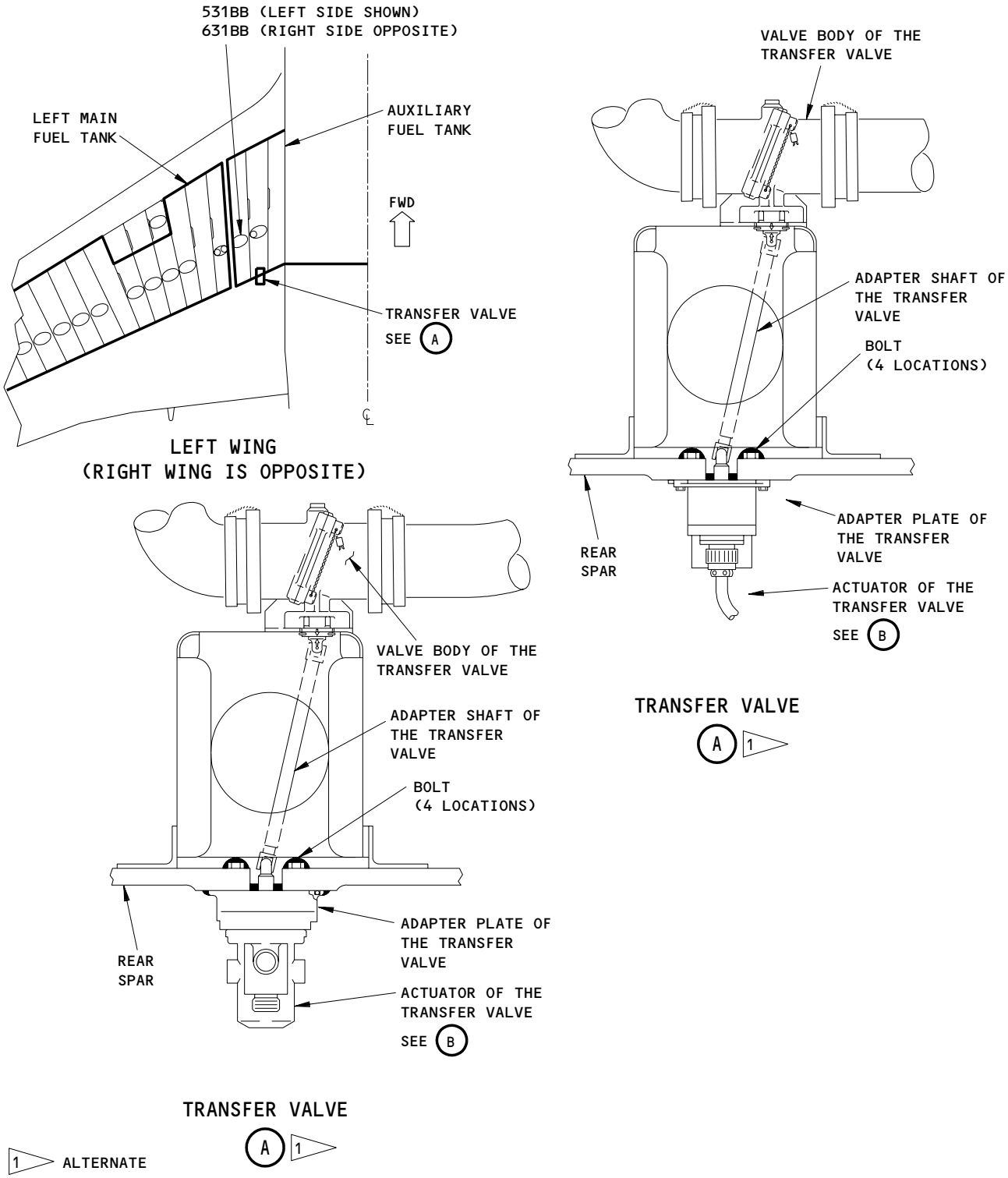

Fuel Jettison Transfer Valve Adapter Shaft
Figure 402 (Sheet 1)

BOEING PROPRIETARY - Copyright (C) - Unpublished Work - See title page for details.

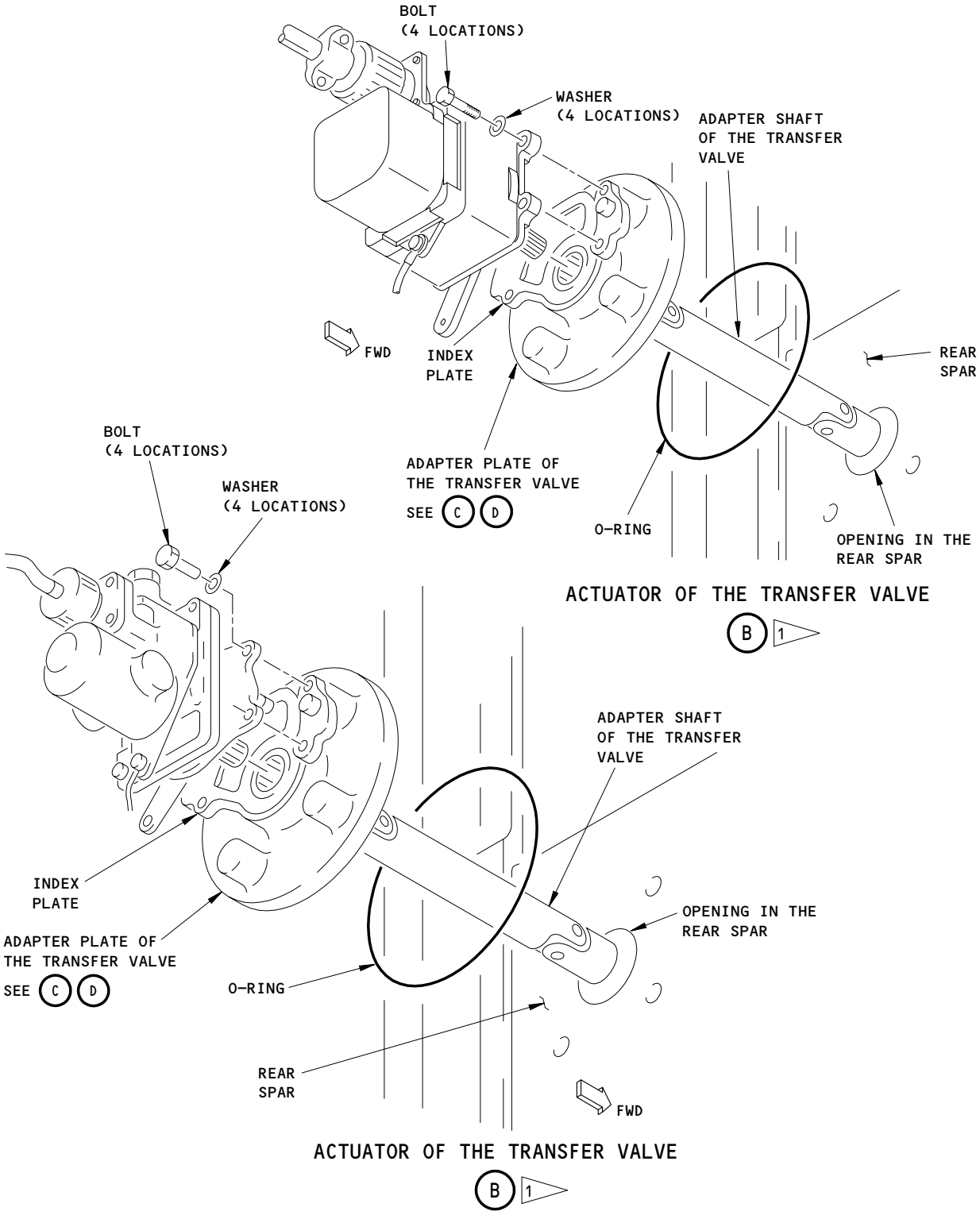

Fuel Jettison Transfer Valve Adapter Shaft
Figure 402 (Sheet 2)

BOEING PROPRIETARY - Copyright (C) - Unpublished Work - See title page for details.

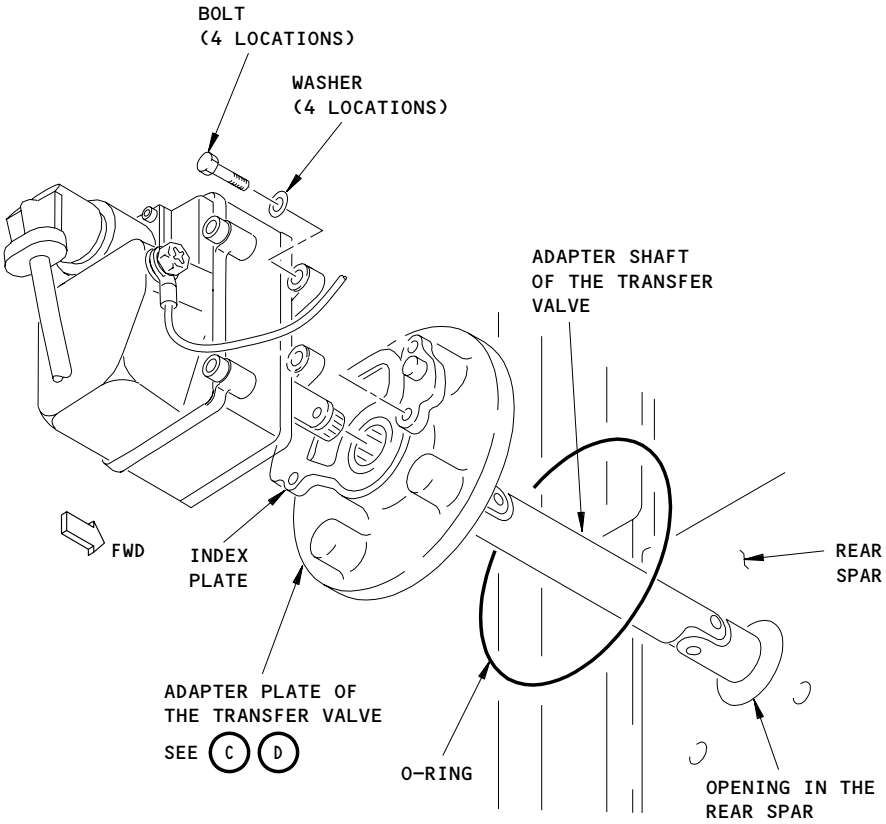

ACTUATOR OF THE TRANSFER VALVE

B 2

2 RECOMMENDED

Fuel Jettison Transfer Valve Adapter Shaft
Figure 402 (Sheet 3)

BOEING PROPRIETARY - Copyright (C) - Unpublished Work - See title page for details.

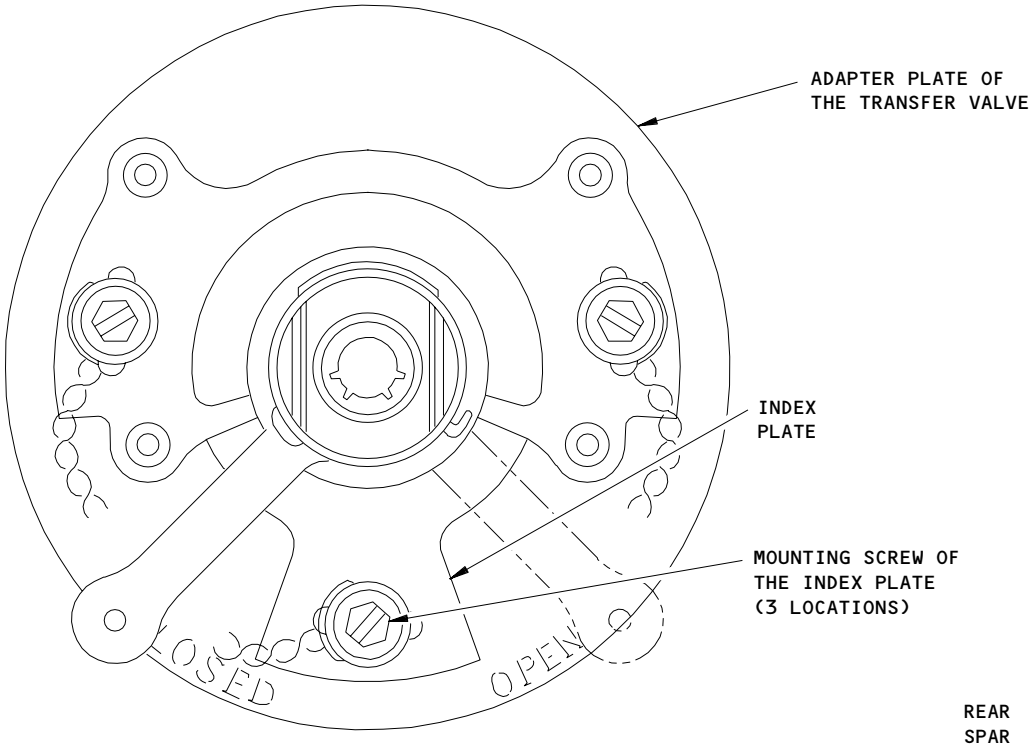

ADAPTER PLATE OF
THE TRANSFER VALVE

C

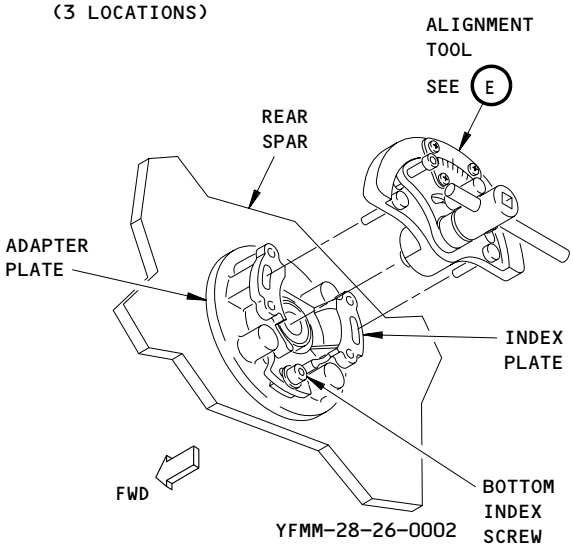

ADAPTER PLATE

D

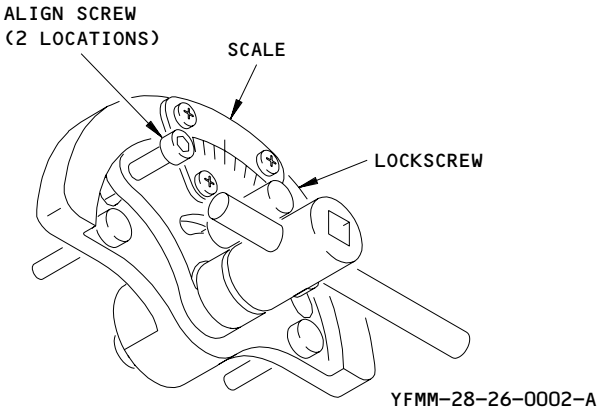

ALIGNMENT TOOL

E

Fuel Jettison Transfer Valve Adapter Shaft
Figure 402 (Sheet 4)

BOEING PROPRIETARY - Copyright (C) - Unpublished Work - See title page for details.

S 494-050

WARNING: USE THE PROCEDURE IN AMM 32-00-15/201 TO INSTALL THE DOOR LOCKS. THE DOORS OPEN AND CLOSE QUICKLY AND CAN CAUSE INJURY TO PERSONS OR DAMAGE TO EQUIPMENT.

(3) Open the doors for the landing gear and install the door locks (AMM 32-00-15/201).

S 864-003

(4) Move the manual override handle on the actuator of the transfer valve to the CLOSED position (View D, Fig. 401).

S 654-004

(5) Defuel the auxiliary fuel tank (AMM 28-26-00/201).

S 654-051

(6) Drain and purge the auxiliary fuel tank (AMM 28-11-00/201).

S 014-005

(7) Remove the applicable left or right auxiliary tank access door, 531BB or 631BB (AMM 28-11-02/401).

S 944-052

WARNING: OBEY THE FUEL TANK ENTRY PRECAUTIONS. FAILURE TO OBEY THE FUEL TANK ENTRY PRECAUTIONS COULD CAUSE INJURY TO PERSONS OR DAMAGE TO EQUIPMENT.

(8) Obey the fuel tank entry precautions (AMM 28-11-00/201).

S 014-053

(9) Go into the fuel tank.

S 024-006

(10) Disconnect the valve body from the fuel jettison manifold (View A).

S 024-007

(11) Remove the bolts and washers that attach the valve body to the mounting bracket (View B).

S 024-008

(12) Disengage the valve body from the adapter shaft.

S 024-009

(13) Remove the valve body of the transfer valve.

BOEING PROPRIETARY - Copyright (C) - Unpublished Work - See title page for details.

TASK 28-31-06-404-010

3. Install the Valve Body of the Transfer Valve (Fig. 401)

A. References

(1) AMM 12-11-01/301, Fuel Tank Pressure Fueling
(2) AMM 20-10-21/601, Electrical Bonding
(3) AMM 28-11-00/201, Fuel Tanks
(4) AMM 28-11-02/401, Auxiliary Tank Access Door
(5) AMM 28-31-00/501, Fuel Jettison System
(6) AMM 32-00-15/201, Landing Gear Door Locks

B. Access

(1) Location Zones

531 Center Auxiliary Tank (Left)
631 Center Auxiliary Tank (Right)

(2) Access Panels

531BB Auxiliary Tank Access Door (Left)
631BB Auxiliary Tank Access Door (Right)

C. Procedure

S 214-011

(1) Make sure the manual override handle on the actuator of the transfer valve is in the CLOSED position (View D).

S 944-054

WARNING: OBEY THE FUEL TANK ENTRY PRECAUTIONS. FAILURE TO OBEY THE FUEL TANK ENTRY PRECAUTIONS COULD CAUSE INJURY TO PERSONS OR DAMAGE TO EQUIPMENT.

(2) Obey the fuel tank entry precautions (AMM 28-11-00/201).

S 014-012

(3) Go into the fuel tank (AMM 28-11-00/201).

S 424-013

(4) Engage the valve body on the adapter shaft (View A).

S 824-014

(5) Make sure the index marks on the adapter shaft and the index marks on the valve body align (View B).

S 424-015

(6) Install the bolts and washers that connect the valve body to the mounting bracket.

S 424-016

(7) Connect the valve body to the fuel jettison manifold (View A).

BOEING PROPRIETARY - Copyright (C) - Unpublished Work - See title page for details.

S 224-017
(8) Make sure the bonding resistance between the valve body and the airplane structure is not more than 0.005 ohm (AMM 20-10-21/601) (View C).

S 414-018
(9) Install the applicable auxiliary tank access door, 531BB or 631BB (AMM 28-11-02/401).

S 864-068
(10) SAS 150, 152-154 POST-SB 27-27;
SAS 050-149, 155-999;
MTH 277-999;
Remove the DO-NOT-CLOSE tags and close these circuit breakers on the P11 panel:
(a) 11M13, LEFT JETT CONT
(b) 11M22, RIGHT JETT CONT

S 654-063
(11) Refuel the fuel tank if no more work is necessary (AMM 12-11-01/301).

S 714-070
(12) SAS 150, 152-154 POST-SB 28-27;
SAS 050-149, 155-999;
MTH 277-999;
Do the Test of the Transfer Valves procedure (AMM 28-31-00/501).

S 094-055

WARNING: USE THE PROCEDURE IN AMM 32-00-15/201 TO REMOVE THE DOOR LOCKS. THE DOORS OPEN AND CLOSE QUICKLY AND CAN CAUSE INJURY TO PERSONS OR DAMAGE TO EQUIPMENT.

(13) Remove the door locks from the landing gear doors and close the doors (AMM 32-00-15/201).

TASK 28-31-06-004-056
4. Remove the Adapter Shaft of the Transfer Valve (Fig. 402)
A. General
(1) The adapter shaft of the fuel jettison transfer valve has an index plate and an adapter shaft. The adapter shaft has an adapter plate and a shaft.
B. References
(1) AMM 28-11-00/201, Fuel Tanks (Purging and Entry)
(2) AMM 28-11-02/401, Auxiliary Tank Access Door
(3) AMM 28-26-00/201, Defueling

BOEING PROPRIETARY - Copyright (C) - Unpublished Work - See title page for details.

(4) AMM 28-31-04/401, Fuel Jettison Transfer Valve Actuator
(5) AMM 32-00-15/201, Landing Gear Door Locks
(6) AMM 32-00-20/201, Landing Gear Downlocks

C. Access

(1) Location Zones

531 Center Auxiliary Tank (Left)
631 Center Auxiliary Tank (Right)

(2) Access Panels

531BB Auxiliary Tank Access Door (Left)
631BB Auxiliary Tank Access Door (Right)

D. Procedure

S 214-057

(1) Make sure the downlocks are installed on the nose and main landing gear (AMM 32-00-20/201).

S 494-058

WARNING: USE THE PROCEDURE IN AMM 32-00-15/201 TO INSTALL THE DOOR LOCKS. THE DOORS OPEN AND CLOSE QUICKLY AND CAN CAUSE INJURY TO PERSONS OR DAMAGE TO EQUIPMENT.

(2) Open the doors for the landing gear and install the door locks (AMM 32-00-15/201).

S 864-067

(3) SAS 150, 152-154 POST-SB 28-27;
SAS 050-149, 155-999;
MTH 277-999;
Open these circuit breakers on the overhead circuit breaker panel, P11, and attach DO-NOT-CLOSE tags:
(a) 11M13, LEFT JETT CONT
(b) 11M22, RIGHT JETT CONT

S 864-021

(4) Move the manual override handle on the actuator of the transfer valve to the CLOSED position (View D, Fig. 401).

S 034-022

(5) Remove the actuator of the transfer valve (AMM 28-31-04/401).

S 654-023

(6) Defuel the auxiliary fuel tank (AMM 28-26-00/201).

BOEING PROPRIETARY - Copyright (C) - Unpublished Work - See title page for details.

S 654-059
(7) Drain and purge the auxiliary fuel tank (AMM 28-11-00/201).

S 014-024
(8) Remove the applicable left or right auxiliary tank access door, 531BB or 631BB (AMM 28-11-02/401).

S 944-060

WARNING: OBEY THE FUEL TANK ENTRY PRECAUTIONS. FAILURE TO OBEY THE FUEL TANK ENTRY PRECAUTIONS COULD CAUSE INJURY TO PERSONS OR DAMAGE TO EQUIPMENT.

(9) Obey the fuel tank entry precautions (AMM 28-11-00/201).

S 014-025
(10) Go into the auxiliary fuel tank to the transfer valve location.

S 034-026
(11) Remove the bolts and washers that attach the adapter plate of the adapter shaft (View A, Fig. 402).

S 024-027
(12) Disengage the adapter shaft from the valve body.

S 024-028
(13) Remove the adapter shaft (with the index plate attached) through the opening in the rear spar (View B, Fig. 402).

TASK 28-31-06-404-029
5. Install the Adapter Shaft of the Transfer Valve (Fig. 402)
A. General
(1) The adapter shaft of the fuel jettison transfer valve has an index plate and an adapter shaft. The adapter shaft has an adapter plate and a shaft.
B. Consumable Materials
(1) G00034 Cotton Wiper, Process Cleaning Absorbent Wiper (cheesecloth, gauze) BMS15-5

BOEING PROPRIETARY - Copyright (C) - Unpublished Work - See title page for details.

(2) G50021 Scotch-Brite 96W pad
(3) D00504 Petrolatum grease
(4) C00064 Coating - Chemical Conversion Coating for Aluminum or Aluminum Alloys. MIL-C-5541, (MIL-C-81706). Alodine 600.
(5) C00307 BMS 10-20, Type II Class A - Finish, Corrosion Resistant
(6) A00247 Chromate Type Sealant - BMS 5-95, Class B
(7) A00767 Sealant - Integral Fuel Tank BMS 5-45
(8) B01008 Solvent - Series 88
(9) B01012 Solvent - Series 92

C. References
(1) AMM 12-11-01/301, Fuel Tank Pressure Fueling
(2) AMM 20-10-23/401, Lockwire
(3) AMM 20-30-88/201, Airplane Structure Cleaning Solvents (Series 88)
(4) AMM 20-30-92/201, Airplane Structure Cleaning Solvents (Series 92)
(5) AMM 24-22-00/201, Electrical Power Control
(6) AMM 28-11-00/201, Fuel Tanks
(7) AMM 28-11-02/401, Auxiliary Tank Access Door
(8) AMM 28-31-00/501, Fuel Jettison System
(9) AMM 28-31-04/401, Fuel Jettison Transfer Valve Actuator
(10) AMM 32-00-15/201, Landing Gear Door Locks
(11) AMM 51-31-01/201, Seals and Sealing
(12) SWPM 20-20-00, Electrical Bonding and Grounds

D. Equipment
(1) Brush - Soft Bristle
(2) BAC5000 - Sealant Removal Tool

E. Access
(1) Location Zones
531 Center Auxiliary Tank (Left)
631 Center Auxiliary Tank (Right)

(2) Access Panels
531BB Auxiliary Tank Access Door (Left)
631BB Auxiliary Tank Access Door (Right)

BOEING PROPRIETARY - Copyright (C) - Unpublished Work - See title page for details.

F. AIRPLANES WITHOUT ACTUATOR MA20A2027 OR MA30A1001;
Install the Adapter Shaft of the Transfer Valve

S 434-030
(1) Install a new O-ring on the adapter plate of the transfer valve (View B, Fig. 402).

S 214-031
(2) Make sure that the area on the rear spar that will be sealed is clean.

S 424-032
(3) Put the adapter shaft through the opening in the rear spar.

S 944-061

WARNING: OBEY THE FUEL TANK ENTRY PRECAUTIONS. FAILURE TO OBEY THE FUEL TANK ENTRY PRECAUTIONS COULD CAUSE INJURY TO PERSONS OR DAMAGE TO EQUIPMENT.

(4) Obey the fuel tank entry precautions (AMM 28-11-00/201).

S 014-033
(5) Go into the fuel tank.

S 424-034
(6) Engage the adapter shaft with the valve body (View A, Fig. 402).

S 434-035
(7) Install the bolts and washers to attach the adapter plate to the rear spar.

S 394-036
(8) Apply the sealing compound around the bolts and the hole in the center of the adapter plate (AMM 51-31-01/201).

S 214-037
(9) Make sure the sealing compound does not cause the transfer valve to operate incorrectly.

S 824-082
(10) Do this task: Adapter Shaft Alignment.

S 434-062
(11) Install the lockwire on the mounting screws.

S 224-043
(12) Make sure the bonding resistance between the adapter plate and the airplane structure is 0.005 ohm (5 milliohms) or less (SWPM 20-20-00).

BOEING PROPRIETARY - Copyright (C) - Unpublished Work - See title page for details.

S 394-044

(13) Use the chromate type sealant to apply a fillet seal between the adapter plate and the rear spar (AMM 51-31-01/201).

S 434-045

(14) Install the actuator of the transfer valve (AMM 28-31-04/401).

G. AIRPLANES WITH ACTUATOR MA20A2027 OR MA30A1001;
Install the Adapter Shaft of the Transfer Valve

S 124-099

(1) Remove the old sealant and clean the rear spar, adapter shaft, index plate, and fasteners (if reused).
   (a) Use the sealant removal tool and sealant removal tool handle (or equivalent) to remove the old sealant from the rear spar.
   (b) If new parts are to be installed, use an abrasive pad to remove the anodized finish from the faying surfaces of the adapter plate of the adapter shaft and index plate (SWPM 20-20-00).

WARNING: DO NOT GET SOLVENTS IN YOUR MOUTH, YOUR EYES, OR ON YOUR SKIN. DO NOT BREATHE THE FUMES FROM SOLVENTS. SOLVENTS ARE DANGEROUS MATERIALS. SOLVENTS CAN BE FLAMMABLE. OBEY THE MATERIAL SAFETY DATA SHEETS (MSDS) FOR SOLVENTS. OBEY LOCAL REGULATIONS FOR THE CORRECT PROCEDURES TO USE OR DISCARD SOLVENTS. SOLVENTS CAN CAUSE INJURIES TO PERSONS AND DAMAGE TO EQUIPMENT.

   (c) To remove the remaining sealant, grease, oil, dirt, and other contamination from the components, use one of these items soaked with Series 92 solvent (AMM 20-30-92/201).
      1) soft bristle brush
      2) cotton wiper
      3) Scotch-Brite 96W pad

S 114-100

(2) Do these steps to prepare the adapter plate and the rear spar for a fillet sealed electrical faying surface bond (SWPM 20-20-00):

WARNING: DO NOT GET SOLVENTS IN YOUR MOUTH, YOUR EYES, OR ON YOUR SKIN. DO NOT BREATHE THE FUMES FROM SOLVENTS. SOLVENTS ARE DANGEROUS MATERIALS. SOLVENTS CAN BE FLAMMABLE. OBEY THE MATERIAL SAFETY DATA SHEETS (MSDS) FOR SOLVENTS. OBEY LOCAL REGULATIONS FOR THE CORRECT PROCEDURES TO USE OR DISCARD SOLVENTS. SOLVENTS CAN CAUSE INJURIES TO PERSONNEL AND DAMAGE TO EQUIPMENT.

   (a) Final clean the contact surfaces of the adapter plate and the rear spar with a cotton wiper soaked with Series 88 solvent (AMM 20-30-88/201).
   (b) Rub dry with a clean, dry cotton wiper.

BOEING PROPRIETARY - Copyright (C) - Unpublished Work - See title page for details.

(c) Continue to clean and dry the surface until the dry cotton wiper stays clean.

S 434-101

(3) While outside of the airplane fuel tank, do these steps:
(a) Put a thin layer of petrolatum grease on the new o-ring.
(b) Put the o-ring in the o-ring groove of the adapter plate.
(c) Put the shaft of the adapter shaft through the opening in the rear spar.
(d) Make sure the shoulder of the adapter shaft does not bind in the opening of the rear spar.

S 864-102

WARNING: OBEY THE FUEL TANK ENTRY PRECAUTIONS. FAILURE TO OBEY THE FUEL TANK ENTRY PRECAUTIONS COULD CAUSE INJURY TO PERSONS OR DAMAGE TO EQUIPMENT.

(4) Obey the fuel tank entry precautions (AMM 28-11-00/201).

S 014-103

WARNING: DO THE PURGING AND FUEL TANK ENTRY PROCEDURE. FAILURE TO FOLLOW THE PURGING AND FUEL TANK ENTRY PROCEDURE COULD CAUSE INJURIES TO PERSONS OR DAMAGE TO EQUIPMENT.

(5) Go into the the fuel tank to the transfer valve location (AMM 28-11-00/201).

S 424-104

(6) Do these steps to install the adapter shaft:
(a) Make sure that the index marks on the valve body and adapter shaft are aligned.

NOTE: A small misalignment of the index marks is satisfactory.

(b) Engage the shaft of the adapter shaft with the valve body.
(c) Apply sealant to the shank and the threads of the four bolts.

NOTE: CDCCL - Refer to the task: Airworthiness Limitation Precautions (AMM 28-00-00/201), for important information on Critical Design Configuration Control Limitations (CDCCLs).

NOTE: This is applicable to Airworthiness Limitation 28-AWL-23.

1) Use BMS5-45 Class B sealant for the wet installation of the bolts.
2) Make sure the sealant applied to the fasteners is approximately 0.060 inch (1.52 mm) thick.

BOEING PROPRIETARY - Copyright (C) - Unpublished Work - See title page for details.

(d) Install the bolts and washers to attach the adapter shaft to the spar (View A).
(e) Make sure the gap between the adapter shaft and the valve body spline is 0.20 +/- 0.20 inch (5.1 +/- 5.1 mm).

NOTE: If you can not get the correct gap, loosen the support bracket for the valve body and adjust its position to get the correct gap.

S 764-105
(7) On the outside of the fuel tank, measure the bonding resistance between one of the raised serrated surfaces of the adapter plate (bare metal surface) and the rear spar.
(a) Make sure the resistance is 0.0005 ohm (0.5 milliohm) or less.

NOTE: CDCCL - Refer to the task: Airworthiness Limitation Precautions (AMM 28-00-00/201), for important information on Critical Design Configuration Control Limitations (CDCCLs).

NOTE: This is applicable to Airworthiness Limitation 28-AWL-23.

S 424-106
(8) On the inside of the tank, apply a fillet seal of BMS5-45 Class B sealant to these components (AMM 51-31-01/201):

NOTE: CDCCL - Refer to the task: Airworthiness Limitation Precautions (AMM 28-00-00/201), for important information on Critical Design Configuration Control Limitations (CDCCLs).

NOTE: This is applicable to Airworthiness Limitation 28-AWL-23.

(a) The four bolts.
(b) The periphery of the rear spar penetration and the stationary part of the adapter shaft.

NOTE: Make sure the sealant does not touch any part of the adapter shaft that turns.

BOEING PROPRIETARY - Copyright (C) - Unpublished Work - See title page for details.

S 424-107

(9) On the outside of the fuel tank, apply a fillet seal of BMS5-45 Class B sealant around the periphery of the adapter plate (AMM 51-31-01/201).

NOTE: CDCCL - Refer to the task: Airworthiness Limitation Precautions (AMM 28-00-00/201), for important information on Critical Design Configuration Control Limitations (CDCCLs).

NOTE: This is applicable to Airworthiness Limitation 28-AWL-23.

S 824-113

(10) Do this task: Adapter Shaft Alignment.

H. Install the Index Plate

S 824-114

(1) Do this procedure after you have correctly aligned and marked the alignment position of the index plate and adapter plate per this task: Adapter Shaft Alignment.

S 024-115

(2) Remove the mounting screws and washers to remove the index plate from the adapter plate of the adapter shaft.

S 424-116

(3) Do these steps to prepare the index plate and the adapter plate for a sealed electrical faying surface bond (SWPM 20-20-00).
   (a) Protect the alignment reference mark when you clean the index plate and the adapter plate for the electrical bond.

WARNING: DO NOT GET SOLVENTS IN YOUR MOUTH, YOUR EYES, OR ON YOUR SKIN. DO NOT BREATHE THE FUMES FROM SOLVENTS. SOLVENTS ARE DANGEROUS MATERIALS. SOLVENTS CAN BE FLAMMABLE. OBEY THE MATERIAL SAFETY DATA SHEETS (MSDS) FOR SOLVENTS. OBEY LOCAL REGULATIONS FOR THE CORRECT PROCEDURES TO USE OR DISCARD SOLVENTS. SOLVENTS CAN CAUSE INJURIES TO PERSONNEL AND DAMAGE TO EQUIPMENT.

   (b) Final clean the contact surfaces with a cotton wiper soaked with Series 88 solvent (AMM 20-30-88/201).
   (c) Rub dry with a clean, dry cotton wiper.
   (d) Continue to clean and dry the surface until the dry cotton wiper stays clean.

BOEING PROPRIETARY - Copyright (C) - Unpublished Work - See title page for details.

(e) Apply a thin continuous layer of sealant to the serrated surface of the index plate (three locations).

NOTE: CDCCL - Refer to the task: Airworthiness Limitation Precautions (AMM 28-00-00/201), for important information on Critical Design Configuration Control Limitations (CDCCLs).

NOTE: This is applicable to Airworthiness Limitation 28-AWL-23.

1) Use Pro Seal 890A or PR-1440A sealant for the faying surface seal.
2) Make sure the sealant layer is approximately 0.005 inch (0.127 mm) thick.

(f) Apply sealant to the shank and the threads of the mounting screws.

NOTE: CDCCL - Refer to the task: Airworthiness Limitation Precautions (AMM 28-00-00/201), for important information on Critical Design Configuration Control Limitations (CDCCLs).

NOTE: This is applicable to Airworthiness Limitation 28-AWL-23.

1) Use Pro Seal 890A or PR-1440A sealant for the wet installation of the mounting screws.
2) Make sure the sealant applied to the fasteners is approximately 0.060 inch (1.52 mm) thick.

S 424-117

(4) Do these steps to install the index plate.
(a) Align the index plate and the adapter plate with the alignment reference mark that you made during the adapter shaft alignment procedure.
(b) Install the two mounting screws and washers in the top index mounting hole positions.
(c) Install the mounting screw and washer in the bottom index mounting hole position.
(d) Tighten the mounting screws to 22 +/- 1 in-lb (2.5 +/- 0.1 Nm).
(e) Make sure the sealant is continuously squeezed out along the edges of the contact surfaces.
(f) If there are gaps, bubbles or voids in the sealant squeeze out, then disassemble and apply more sealant.
(g) Shape the squeezed out sealant into a fillet seal (AMM 51-31-01/201).

BOEING PROPRIETARY - Copyright (C) - Unpublished Work - See title page for details.

(h) As an option, remove the extra squeezed out sealant.

NOTE: Make sure the sealant that remains is flush with the mating part edges.

S 764-118
(5) Measure the bonding resistance between one of the actuator attachment contact surfaces on the index plate (bare metal surface) and the rear spar.
(a) Make sure the bonding resistance is 0.002 ohm (2 milliohm) or less.

S 424-119
(6) Lockwire the mounting screws and the index plate together.

S 794-120
(7) Do this task: Install the Actuator of the Transfer Valve (AMM 28-31-04/401).

S 374-121
(8) Do this task to apply protective finishes to the bare areas of the rear spar: Apply the Corrosion Resistant Finish (Topcoat) (AMM 28-11-00/701).

NOTE: Re-apply the protective finishes to the rear spar where the electrical bonding probes removed the finishes.

(a) These are the protective finishes:
1) Alodine 600 coating
2) BMS 10-20 coating

I. Put the Airplane Back to its Usual Condition

S 414-046
(1) Install the left or right auxiliary tank access door, 531BB or 631BB (AMM 28-11-02/401).

S 864-069
(2) SAS 150, 152-154 POST-SB 28-27;
SAS 050-149, 155-999;
MTH 277-999;
Remove the DO-NOT-CLOSE tags and close these circuit breakers on the P11 panel:
(a) 11M13, LEFT JETT CONT
(b) 11M22, RIGHT JETT CONT

BOEING PROPRIETARY - Copyright (C) - Unpublished Work - See title page for details.

S 094-047

WARNING: USE THE PROCEDURE IN AMM 32-00-15/201 TO REMOVE THE DOOR LOCKS. THE DOORS OPEN AND CLOSE QUICKLY AND CAN CAUSE INJURY TO PERSONS OR DAMAGE TO EQUIPMENT.

(3) Remove the door locks from the landing gear doors and close the doors (AMM 32-00-15/201).

S 654-048

(4) Refuel the auxiliary fuel tank if no more work is necessary (AMM 12-11-01/301).

TASK 28-31-06-824-083

6. Adapter Shaft Alignment (Fig. 402)

A. Equipment

(1) B28009-1, Adapter Shaft Alignment Tool

(2) Torque meter - 0-15 pound-inches, with a resolution of +/- 1 pound-inch (optional)

B. References

(1) AMM 28-31-04/401, Fuel Jettison Transfer Valve Actuator

C. Access

(1) Location Zones

531 Center Auxiliary Tank (Left)
631 Center Auxiliary Tank (Right)

(2) Access Panels

531BB Auxiliary Tank Access Door (Left)
631TB Auxiliary Tank Access Door (Right)

D. Procedure

S 484-084

(1) Do these steps to install the alignment tool in the adapter plate (3):

(a) Remove the top two mounting screws and washers from the index plate.

(b) Loosen the bottom mountinng screw, but do not remove it.

(c) Install the alignment tool (Fig. 402):

(d) Put the alignment tool in its position with the two guide pins in the holes left by the two mounting screws that you removed (the scale should be on the top of the tool).

(e) Make sure the spline on the tool engages with the spline on the shaft.

BOEING PROPRIETARY - Copyright (C) - Unpublished Work - See title page for details.

S 824-085

(2) Do these steps to align the adapter shaft (Procedure 1, optional to Procedure 2):

NOTE: This procedure finds the point where the internal valve butterfly engages the valve seal. The torque required to turn the shaft increases as the butterfly engages the seal, then decreases again as the butterfly leaves the other side of the seal. Once the edge of the seal is found, the valve shaft will then be turned to center the butterfly on the seal.

(a) Put the tool handle in the extreme counterclockwise position.
(b) Turn the handle slowly in the clockwise direction at a constant rate while you note the changes in the torque necessary to turn the handle.
(c) Do the previous steps as many times as necessary to find the point in the rotation where the torque necessary to turn the handle increases significantly.
(d) If you cannot find the position in the rotation where the torque increases significantly, then use Procedure 2 below.
(e) Put the shaft in the extreme counterclockwise position again.
(f) Slowly and smoothly turn the handle of the tool clockwise until a distinct increase in torque is found and immediately stop turning the handle.
(g) Read the scale on the tool.

NOTE: This is the point where the valve butterfly starts to engage the edge of the seal.

(h) Turn the handle 13 degrees more in the clockwise direction (the scale on the tool is calibrated in degrees).

NOTE: The valve butterfly is now centered on the valve seal.

If you turn the handle past the target value, do not turn the handle back in the counterclockwise direction again. You must start the procedure again with the handle in the extreme counterclockwise position.

S 824-086

(3) Do these steps to align the adapter shaft (Procedure 2, optional to procedure 1):

NOTE: A torque meter is necessary to do this procedure.

(a) Put the tool handle in the extreme counterclockwise position.

BOEING PROPRIETARY - Copyright (C) - Unpublished Work - See title page for details.

(b) Slowly and smoothly turn the tool handle to the extreme clockwise position while you monitor the torque that you apply to the handle.
(c) Write down the maximum torque that you apply to the tool while you turn it from the extreme counterclockwise position to the extreme clockwise position.
(d) Turn the tool back to the extreme counterclockwise position.
(e) Turn the shaft clockwise again at approximately the same rate that you used before.
(f) Stop at the position where the torque increases to approximately two-thirds of the maximum torque that you wrote down before.
(g) Read the scale on the tool at this position.

NOTE: This is the position where valve butterfly starts to engage the edge of the seal.

(h) Turn the handle 13 more degrees in the clockwise direction past the reading from the previous step.

NOTE: The butterfly valve is now centered on the valve seal. If you turn the valve past the target value, do not turn it back in the counterclockwise direction. You must start again with the tool handle in the extreme counterclockwise position.

S 034-087
(4) Tighten the lockscrew on the tool to keep the adapter shaft in its position.

S 824-088
(5) Turn the index plate until the actuator mounting holes in the index plate are aligned with the two upper holes for the actuator mounting screws.

S 824-089
(6) Insert the two align screws into the holes for the actuator mounting screws to hold the index plate in alignment with the mounting plate (this is a final adjustment of the position of the index plate).

S 434-090
(7) Tighten the bottom mounting screw to a torque of 21-23 pound-inches.

S 084-091
(8) Carefully remove the align screws.

S 084-092
(9) Carefully remove the alignment tool from the index plate.

BOEING PROPRIETARY - Copyright (C) - Unpublished Work - See title page for details.

S 434-093

(10) Install the top two mounting screws and washers in the index plate and tighten them to a torque of 21-23 pound-inches.

BOEING PROPRIETARY - Copyright (C) - Unpublished Work - See title page for details.

FUEL JETTISON CONTROL MODULE - REMOVAL/INSTALLATION

1. General
   A. The control module for fuel jettison is installed in the overhead panel, P5. The control module contains the fuel jettison switch, the indication switch for the pump relay, a fault light for the fuel jettison system, and the valves switches for the fuel jettison nozzles valves.
   B. This procedure contains two tasks. The first task removes the control module for fuel jettison. The second task installs the control module for fuel jettison.

TASK 28-31-08-004-005

2. Fuel Jettison Control Module Removal (Fig. 401)
   A. Access
      (1) Location Zones
         211 Control Cabin - Section 41 (Left)
         212 Control Cabin - Section 41 (Right)

   B. Procedure

      S 864-006
      (1) Open these circuit breakers and attach DO-NOT-CLOSE tags:
         (a) P11 Overhead Circuit Breaker Panel
            1) 11M13, LEFT FUEL JETT CONT
            2) 11M22, RIGHT FUEL JETT CONT
            3) 11M14, LEFT JETT NOZZLE VALVE
            4) 11M23, RIGHT JETT NOZZLE VALVE

      S 034-001
      (2) Remove the screws from the control module for fuel jettison.

      S 024-009
      (3) Remove the control module for fuel jettison from the overhead panel, P5.

      S 034-011
      (4) Disconnect the four electrical connectors from the control module for fuel jettison.

TASK 28-31-08-404-012

3. Fuel Jettison Control Module Installation (Fig. 401)
   A. References
      (1) AMM 24-22-00/201, Electrical Power Control
      (2) AMM 28-31-00/501, Fuel Jettison System

BOEING PROPRIETARY - Copyright (C) - Unpublished Work - See title page for details.

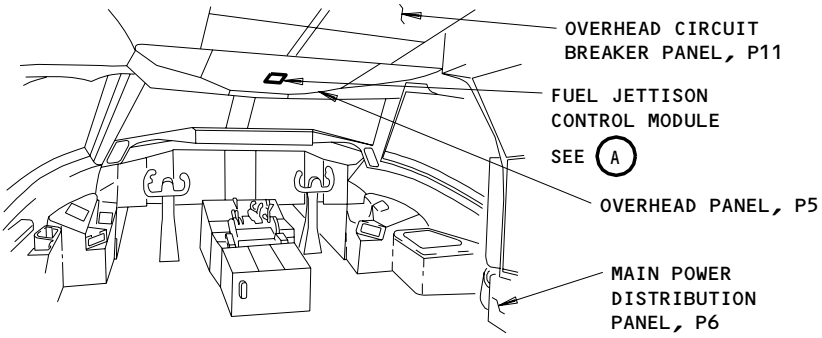

FLIGHT COMPARTMENT

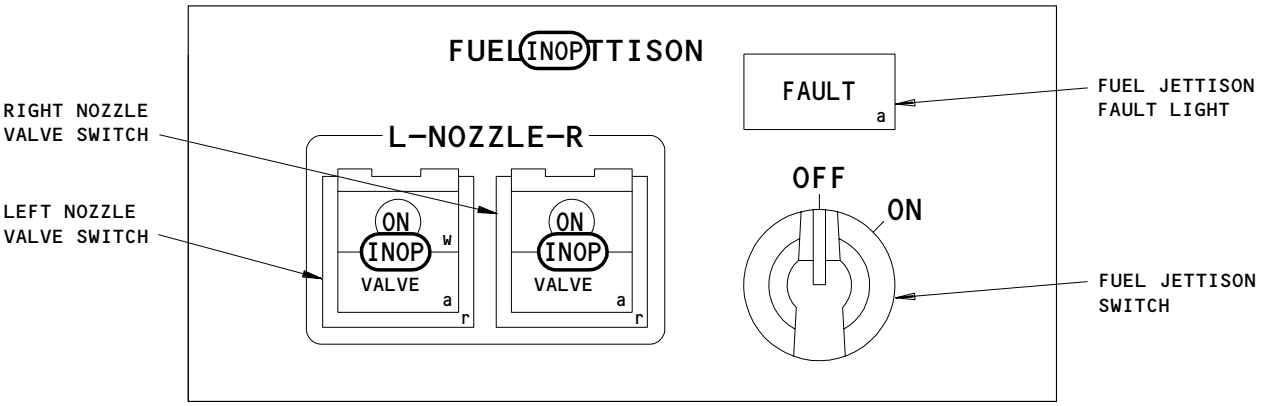

FUEL JETTISON CONTROL MODULE

A 1

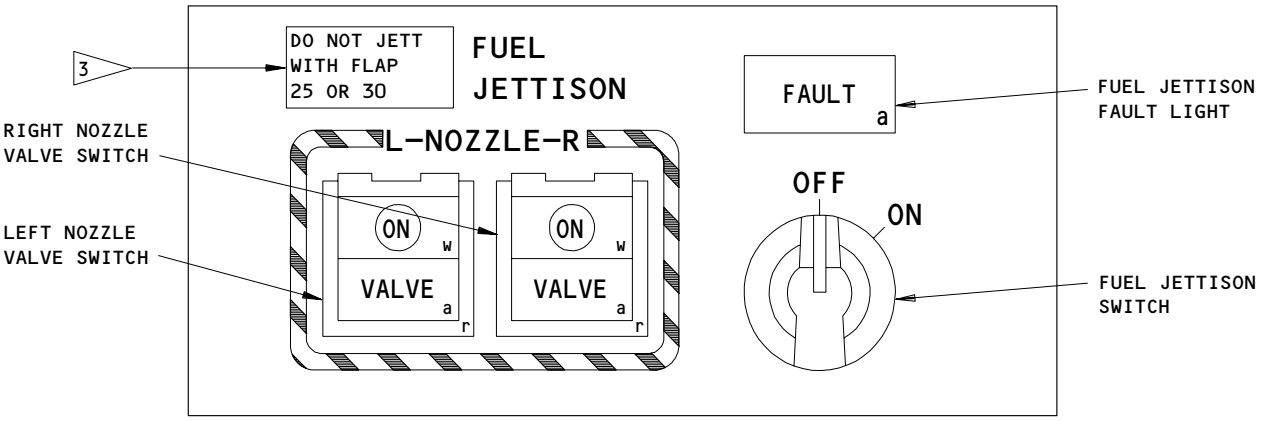

FUEL JETTISON CONTROL MODULE

A 2

1 MTH 276

2 MTH 275 WITH SB 28-27, AND MTH 277-999;
SAS 050-149,AND SAS 150,152-154 WITH
SB 28-17, AND SAS 155-999

3 MTH 277,278,280 WITHOUT SB 28-38, AND
MTH 279;
SAS 155-157,165-167 WITHOUT SB 28-38,
AND SAS 050,051,162-164 WITHOUT SB 28-25

Fuel Jettison Control Module
Figure 401

BOEING PROPRIETARY - Copyright (C) - Unpublished Work - See title page for details.

B. Access
(1) Location Zones
211 Control Cabin - Section 41 (Left)
212 Control Cabin - Section 41 (Right)

C. Procedure

S 434-013
(1) Connect the electrical connectors to the control module for fuel jettison.

S 424-002
(2) Install the control module for fuel jettison in the P5 panel.

S 434-004
(3) Install the screws in the control module for fuel jettison.

S 864-014
(4) Remove the DO-NOT-CLOSE tag and close these circuit breaker:
(a) P11 Overhead Circuit Breaker Panel
1) 11M13, LEFT FUEL JETT CONT
2) 11M22, RIGHT FUEL JETT CONT
3) 11M14, LEFT JETT NOZZLE VALVE
4) 11M23, RIGHT JETT NOZZLE VALVE

S 864-017
(5) Supply electrical power (AMM 24-22-00/201).

S 724-018
(6) Do a check of the Control Module for Fuel Jettison (AMM 28-31-00/501).

S 864-020
(7) Remove electrical power, if it is not necessary (AMM 24-22-00/201).

BOEING PROPRIETARY - Copyright (C) - Unpublished Work - See title page for details.

FUEL QUANTITY INDICATING SYSTEM (FQIS) - DESCRIPTION AND OPERATION

1. General (Fig. 1)
   A. The fuel quantity indicating system (FQIS) supplies fuel quantity measurement, calculation, and indication. The system contains tank units, compensators, densitometers, fuel quantity indicators, and an FQIS processor. The FQIS processor does the quantity computation and fault isolation for the FQIS system. The FQIS processor also controls automatic pressure fueling for the airplane (AMM 28-21-00/001).
   B. The fuel quantity indicating system is a microcomputer controlled system that uses the variable capacitance principle for fuel quantity measurement. The capacitance of each tank unit is proportional to the percentage of the tank unit which is immersed in fuel.
   C. The FQIS system contains the FQIS processor, a fuel quantity indicator that has a total fuel display, three primary fuel displays, and a fuel temperature display, three load select indicators, a load select control, three compensators, three densitometers, four tank wiring harnesses, and 37 tank units.
   D. The FQIS processor is the principal component of the FQIS. It is a digital, dual-channel, microprocessor based computer, found in the main equipment center on rack E2-4.
   E. The FQIS processor unit reads signals from the tank units, compensators, and densitometers, and computes fuel volume and weight. Each channel of the FQIS processor monitors the signals for problems, and has built-in test equipment (BITE). Fault isolation is supplied to LRU level for all sensors and for the fuel quantity indicator. Fault isolation for the load select indicator is supplied in FIM 28-21-00/101. Faults both transient and permanent are kept in a nonvolatile memory, for recall on demand by the maintenance crew. The FQIS processor supplies the subsequent outputs:
      (1) A signal that shows maintenance is necessary is shown on the EICAS lower display and shows that a fault has been stored in the FQIS processor memory.
      (2) A signal to EICAS which causes of the FUEL QTY BITE status message to show for potential dispatch sensitive failures.
      (3) A signal to EICAS which causes the FUEL QTY CHANNEL or FUEL QTY IND status messages to show for potential dispatch sensitive failures.
      (4) Digital fuel quantity (total and individual tank) shown on the fuel quantity indicator on the P5 panel.
      (5) Digital fuel quantity and fuel load selected, shown on the fuel load select indicators on the fueling control panel, P28.
      (6) Volumetric and fuel quantity shutoff signals sent to the fueling valve relays for automatic fueling shutoff.
      (7) LOW FUEL and FUEL CONFIG signals to operate EICAS messages and a FUEL CONFIG light on the P5 panel.

BOEING PROPRIETARY - Copyright (C) - Unpublished Work - See title page for details.

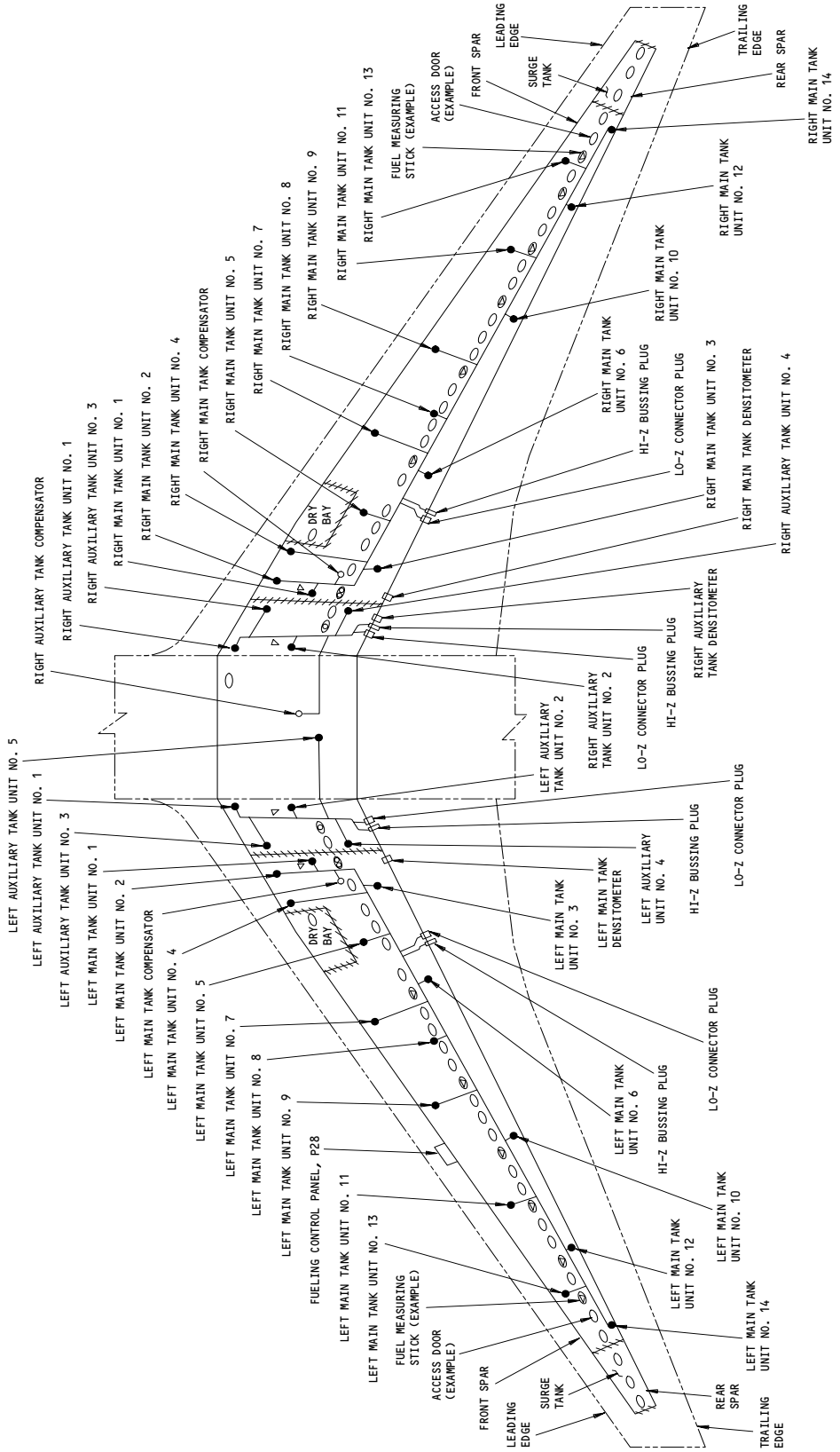

Fuel Quantity Indicating System (FQIS)
Figure 1 (Sheet 1)

BOEING PROPRIETARY - Copyright (C) - Unpublished Work - See title page for details.

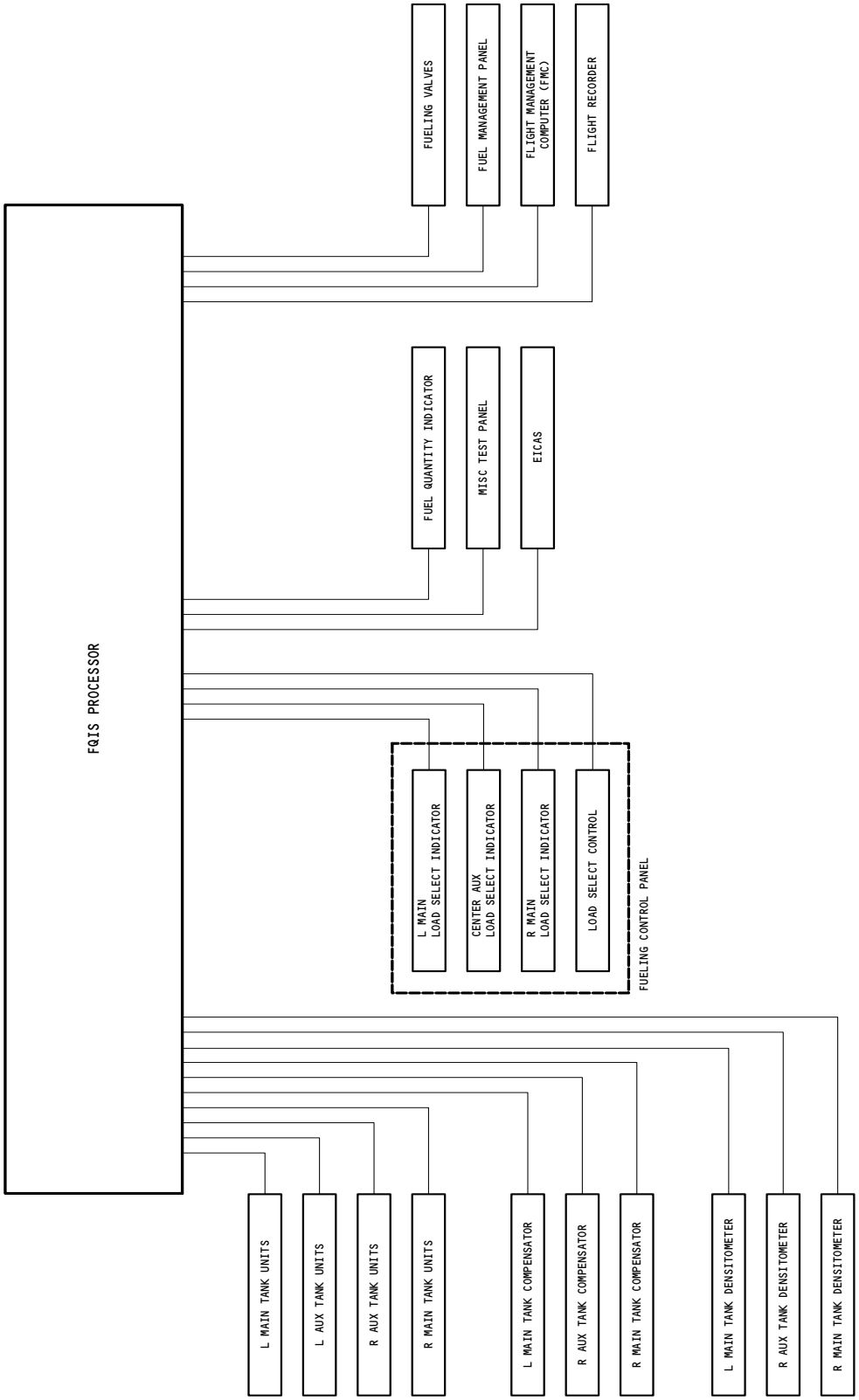

Fuel Quantity Indicating System (FQIS)
Figure 1 (Sheet 2)

A71894

BOEING PROPRIETARY - Copyright (C) - Unpublished Work - See title page for details.

(8) Individual tank and total fuel quantity data outputs to the ARINC 429 Digital Information Transfer System (DITS) bus for maintenance troubleshooting usage.

(9) Capacitance data from each tank unit and density data outputs to the ARINC 429 DITS bus for maintenance troubleshooting usage.

(10) Total fuel data output to fuel management panel and flight management computer.

F. The tank units and compensators are similar in construction and installation provisions. They are capacitance type sensors but the tank units sense the depth of fuel and the compensators sense the dielectric constant of the fuel.

G. The densitometer senses fuel density. Knowing the density and the volume of fuel enables the FQIS processor to calculate the mass or weight of the fuel.

2. Component Details

A. Tank Units (Fig. 2)

(1) There are 14 tank units in each main tank, and 9 units in the auxiliary fuel tank. All tank units are almost the same but their length is different. The length of each tank unit is related to the depth of the tank at each location.

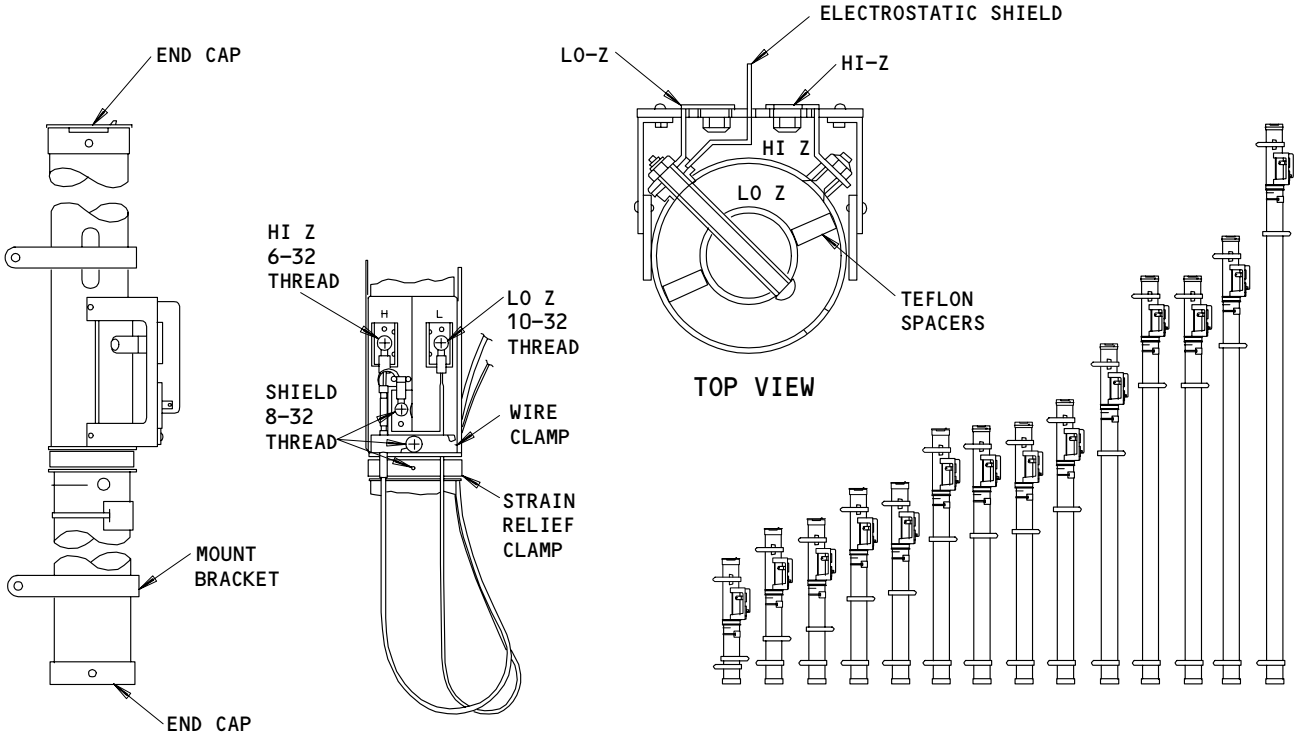

FQIS Tank Units
Figure 2

BOEING PROPRIETARY - Copyright (C) - Unpublished Work - See title page for details.

(2) Each tank unit has two concentric aluminum tubes, a terminal block, cable clamp, two end caps, and two mounting brackets.
   (a) The aluminum tubes are anodized and varnished to protect against corrosion and to improve water droplet shedding. The tubes are factory calibrated by off-centering the center tube with color coded teflon spacers. The distance between the tubes is relatively, widely spaced, to avoid electrical short circuiting, due to water in the fuel and/or fungus coating on the tubes.
   (b) The terminal block supplies a means to connect the tank wiring harness to the tank unit. Different connector sizes eliminate any chance of installation error.
   (c) An overcenter type strain relief clamp attaches the wiring to the tank unit and supplies quick change capability.
   (d) Insulated end caps minimize the chance of the tank unit shorting to ground. They also supply capacitance fringing control.
   (e) Two mounting brackets, made of nonferrous glass-filled nylon, attach each tank unit to the wing structure.
(3) The tank unit senses the depth of fuel in the fuel tank. It is a linear, capacitance type sensor. The concentric aluminum tubes of the tank unit act as plates of a capacitor, and the dielectric is air and/or fuel depending on the quantity of fuel in the fuel tank. This air to fuel ratio produces a capacitance value proportional to the quantity of fuel in the fuel tank.

B. Compensator (Fig. 3)

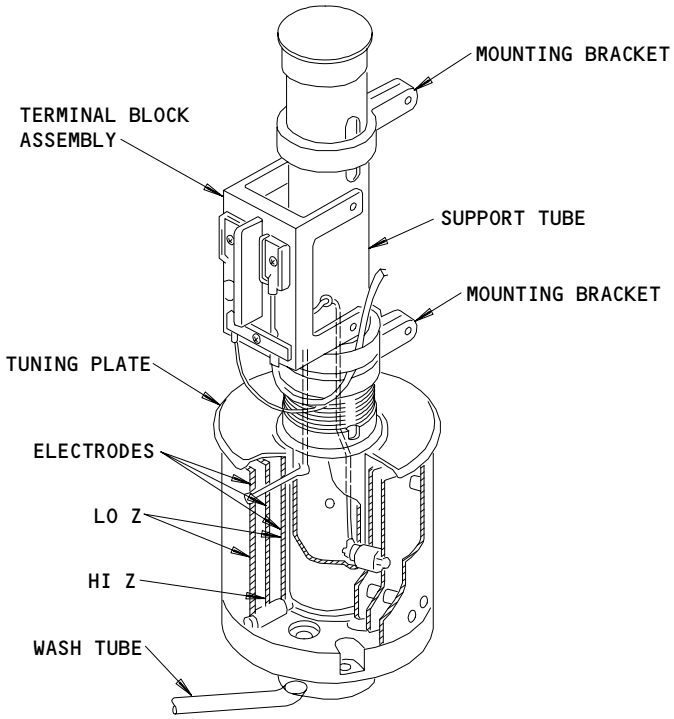

FQIS Compensator
Figure 3

BOEING PROPRIETARY - Copyright (C) - Unpublished Work - See title page for details.

(1) One compensator is installed in the left main fuel tank, one compensator is installed in the right main fuel tank, and one compensator is installed in the auxiliary fuel tank. The compensator installed in the auxiliary fuel tank is referred to as the right auxiliary tank compensator since it is connected to the right auxiliary tank wiring harness.

(2) All compensators are identical. The compensators are constructed and installed in a similar manner as the tank units.

(3) Each compensator has three concentric tubes, or electrodes, which attach to the support tube. A tuning plate fits on top of the electrodes. Turning the tuning plate varies the capacitance fringing effects between the electrodes, and supplies a means of calibration. Setscrews lock the plate in position to prevent turning. Holes in the bottom shield permit compensator washing during fueling operations. This prevents contaminant build-up.

(4) The compensator senses the dielectric constant of the fuel. It is a capacitance sensing device similar to the tank unit. The compensator is installed at the bottom of the fuel tank, completely covered by fuel until the tank is almost empty. As a result, the compensator capacitance is affected only by changes in the dielectric constant of the fuel.

C. Densitometer (Fig. 4)

(1) One densitometer is installed in each main fuel tank, and one in the right compartment of the auxiliary fuel tank. The densitometer measures the fuel density.

(2) The densitometer has two parts, the emitter and the electronics unit. All densitometers are installed on the rear spar with the emitter inside the fuel tank, and the electronics unit out of the fuel tank. Removal of the electronics unit does not require defueling.

D. Electronics Unit for the Densitometer (Fig. 5)

(1) The electronics unit for the densitometer is installed on the studs of the emitter mounting plate, on the aft surface of the rear spar. Removal of the electronics unit does not require defueling.

(2) The electronics unit has a power supply, two detector tubes, a preamplifier, a processor, and an electrical connector. The electronics unit requires 28 volts dc power.

BOEING PROPRIETARY - Copyright (C) - Unpublished Work - See title page for details.

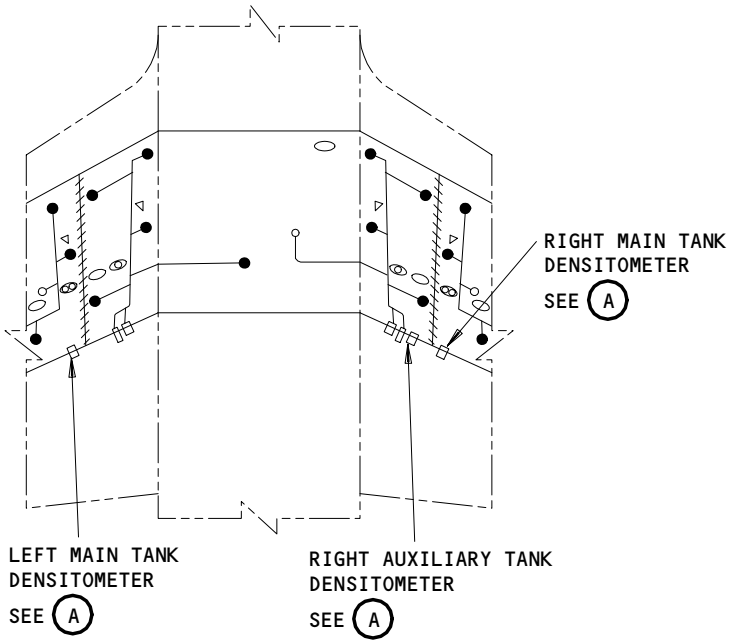

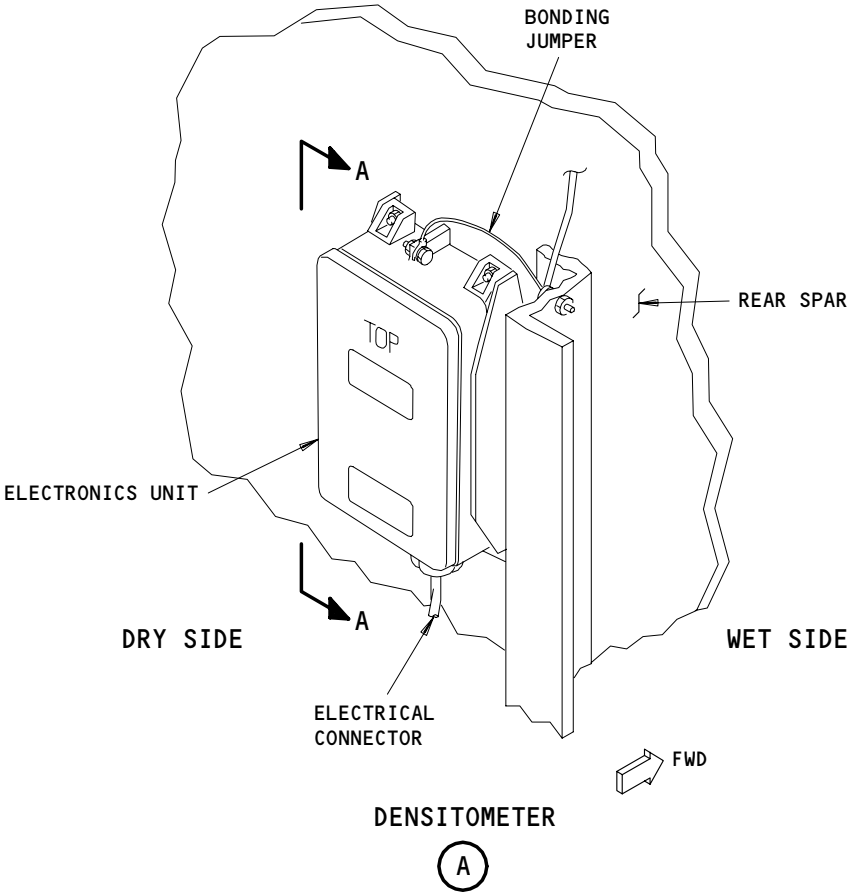

Densitometer
Figure 4 (Sheet 1)

BOEING PROPRIETARY - Copyright (C) - Unpublished Work - See title page for details.

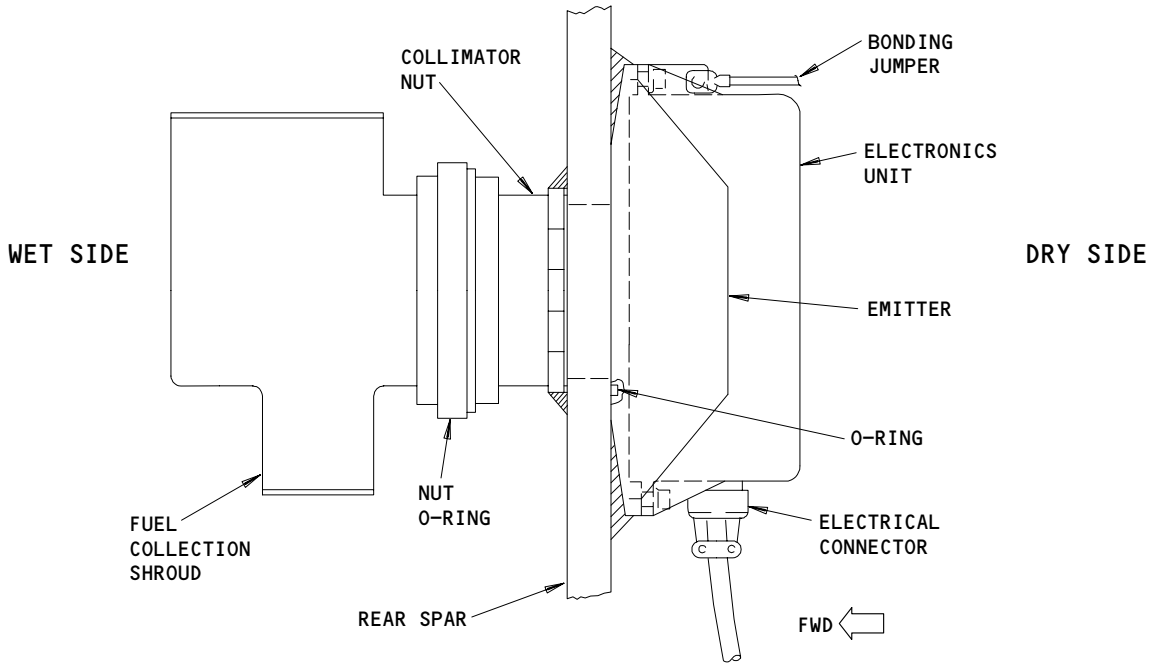

(FOR THE RIGHT AUXILIARY TANK DENSITOMETER)
A-A

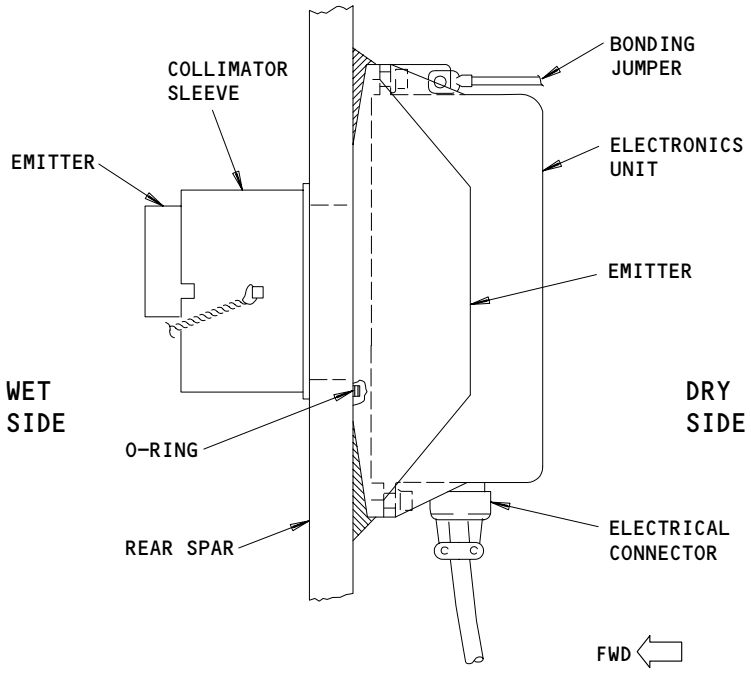

(FOR THE LEFT MAIN TANK DENSITOMETER,
AND THE RIGHT MAIN TANK DENSITOMETER)
A-A

Densitometer
Figure 4 (Sheet 2)

BOEING PROPRIETARY - Copyright (C) - Unpublished Work - See title page for details.

(3) The two detector tubes are filled with xenon gas. When a high voltage of 1400 volts from the power supply board is applied to the anode of the detector tubes, the interaction of the xenon gas, and the gamma radiation from the emitter, produces a variation in voltage at the anodes. The variation in voltage, or pulse, passes to the signal processing electronics. The two pulse train output signals of the electronics unit go to the FQIS processor for calculation of fuel density. Fuel density is proportional to the natural logarithmic value of the ratio of the two pulse output signals.

E. Emitter for the Densitometer (Fig. 6)

WARNING: MAINTENANCE ON THE DENSITOMETER EMITTER MUST BE PERFORMED BY OR UNDER DIRECT SUPERVISION OF QUALIFIED HONEYWELL CORPORATION REPRESENTATIVES. THE DENSITOMETER EMITTER CONTAINS A LOW LEVEL RADIOACTIVE SOURCE. IMPROPER HANDLING OR MAINTENANCE MAY BE HARMFUL TO PERSONNEL.

(1) The emitter has of an aluminum casting, AM241 radioactive source, collimator, and a switch and card assembly.

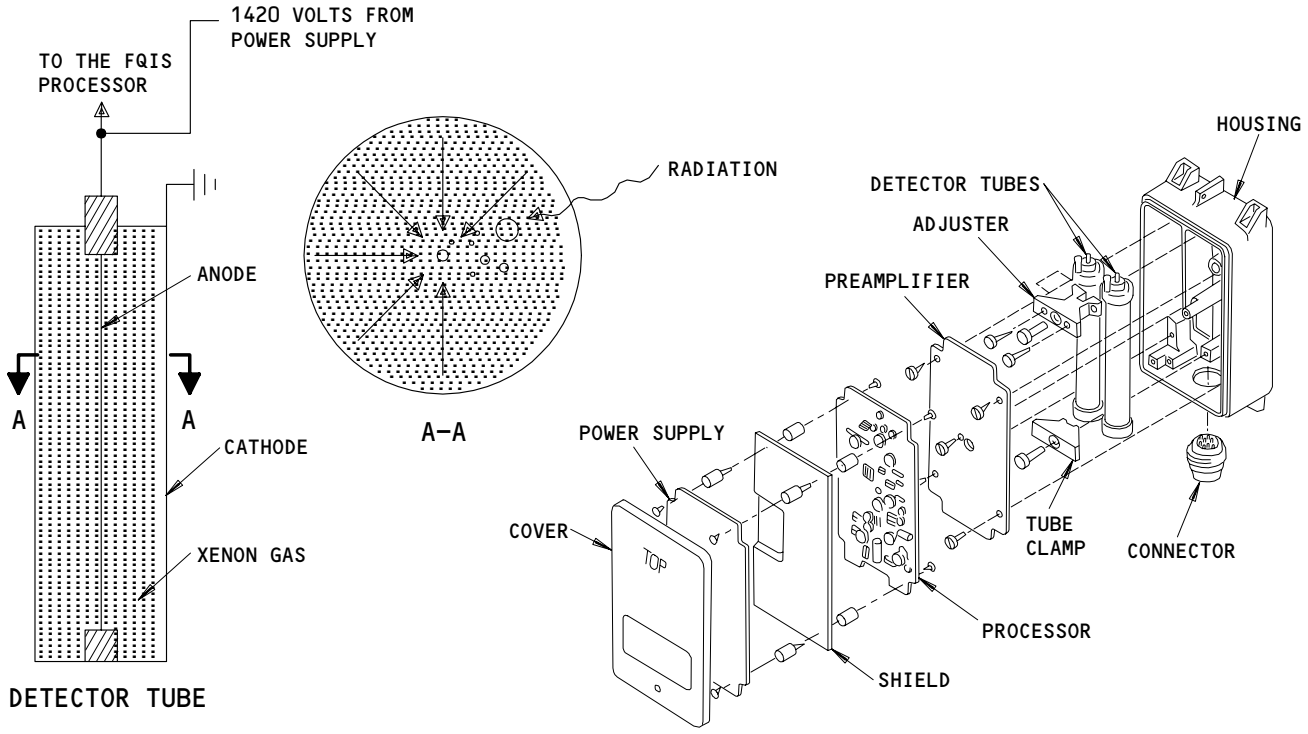

Electronics Unit for the Densitometer
Figure 5

BOEING PROPRIETARY - Copyright (C) - Unpublished Work - See title page for details.

(2) The casting is shaped like a tube, with a rectangular mounting plate at one end, and a small chamber at the other end. The tube is threaded, and fits through a 3 inch diameter hole in the rear spar. An O-ring, washer, and nut fit over the threaded portion, locking the emitter in position on the rear spar. A stud at each corner of the mounting plate lets the electronics unit attach to the emitter.

(3) The chamber contains the radioactive source holder, collimator, and switch and card assembly. The chamber has a cover which is soldered in position.

(4) The switch and card assembly supply a means of detecting fuel leakage into the chamber adjacent to the radioactive source. If a leak occurs, fuel comes in contact with a block of fuel sensitive expanding foam. The expanding foam actuates the switch which sends a signal to the FQIS processor.

(5) The collimator fits around the radioactive source, and directs a conical shaped beam of low level radiation through the fuel to the two detectors in the electronics unit. The distance through the fuel from the radioactive source to each detector is different.

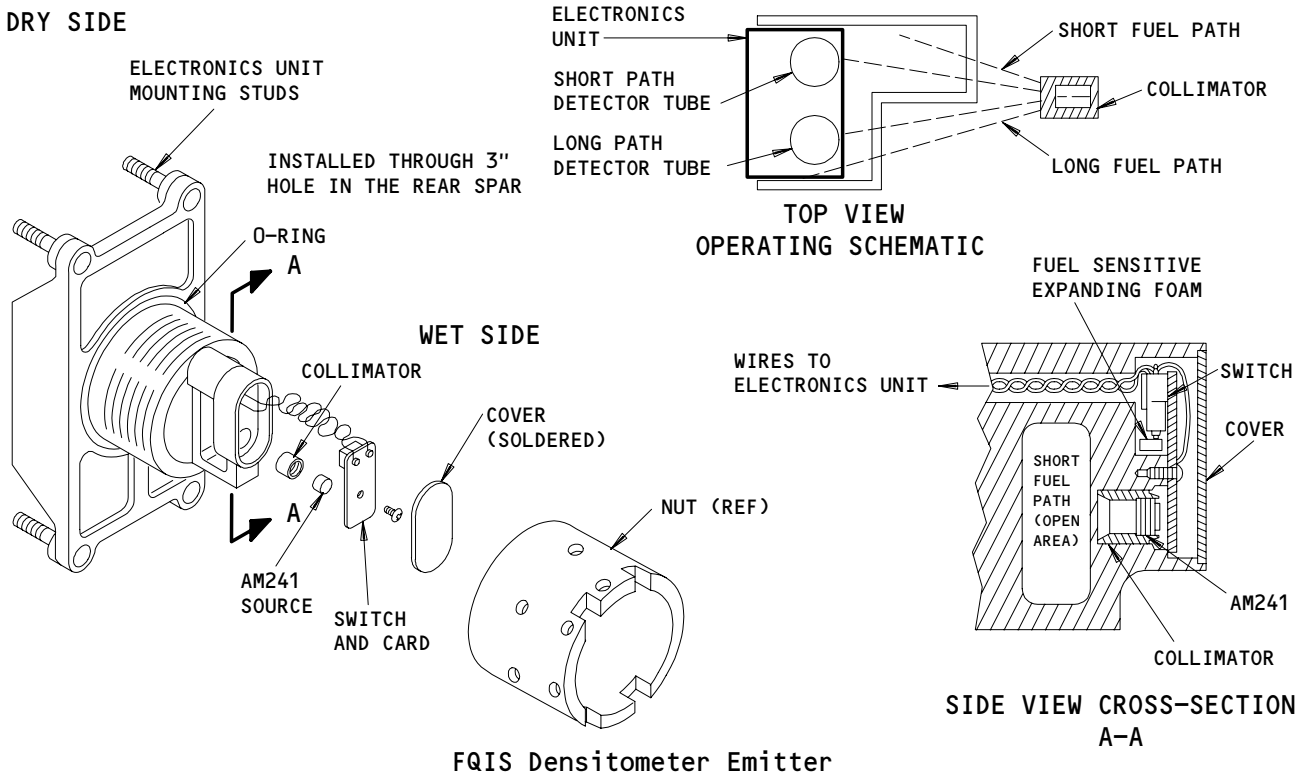

FQIS Densitometer Emitter
Figure 6

BOEING PROPRIETARY - Copyright (C) - Unpublished Work - See title page for details.

F. Fuel Collection Shroud (Fig. 6A)
   (1) A fuel collection shroud is installed on the right auxiliary tank densitometer. The fuel collection shroud is attached to the emitter with a collimator nut. The fuel collection shroud is connected to a tube which feeds off of the engine fuel-feed manifold. Therefore during a fueling operation the densitometer emitter will be kept covered with fuel even though the auxiliary fuel tank may be at a low fuel level. This permits fuel density measurement even at the early stages of fueling and prevents a nuisance fault code from appearing. There are orifices on the top of the fuel collection shroud to permit a constant new flow of fuel to pass by the emitter.

G. Fuel Quantity Indicator (Fig. 7)
   (1) A fuel quantity indicator is installed on the overhead panel, P5. It supplies digital liquid crystal displays of individual tank, and total fuel quantities. It also supplies a display of fuel temperature.
   (2) The fuel quantity indicator is contained in an aluminum housing with a front panel which has five liquid crystal display windows. The back panel has three electrical connectors. Inside the fuel quantity indicator are six printed circuit boards, and twelve lamps for internal lighting.
   (3) 28V DC is supplied to the fuel quantity indicator from the FQIS processor. 5V ac for internal lighting is supplied from aircraft lighting circuits. Power for the fuel temperature portion of the fuel quantity indicator is supplied separately.
   (4) The fuel quantity indicator can be tested by putting the fuel quantity test switch on P61 panel to FUEL QTY. The total fuel readout should show 188.8. The individual tank readouts should show 88.8 and the FUEL TEMP should read -185 ±2. Returning the test switch to the neutral position causes the readouts to show the quantity of usable fuel.

H. FUEL QTY Test Switch (Fig. 7)
   (1) The FUEL QTY test switch is found on the right side panel, P61, in the flight compartment.
   (2) When the FUEL QTY test switch is put in the FUEL QTY position, the subsequent will occur:
      (a) The left, center, and right fuel quantity indicators on the overhead panel, P5, will show 88.8.
      (b) The total fuel quantity indicator on the P5 panel will show 188.8.
      (c) The fuel temperature indicator on the P5 panel will show -185 ±2.
      (d) The FUEL CONFIG light on the P5 panel will come on.
      (e) The EICAS caution message LOW FUEL will show.
      (f) The EICAS status message FUEL QTY IND will show.

BOEING PROPRIETARY - Copyright (C) - Unpublished Work - See title page for details.

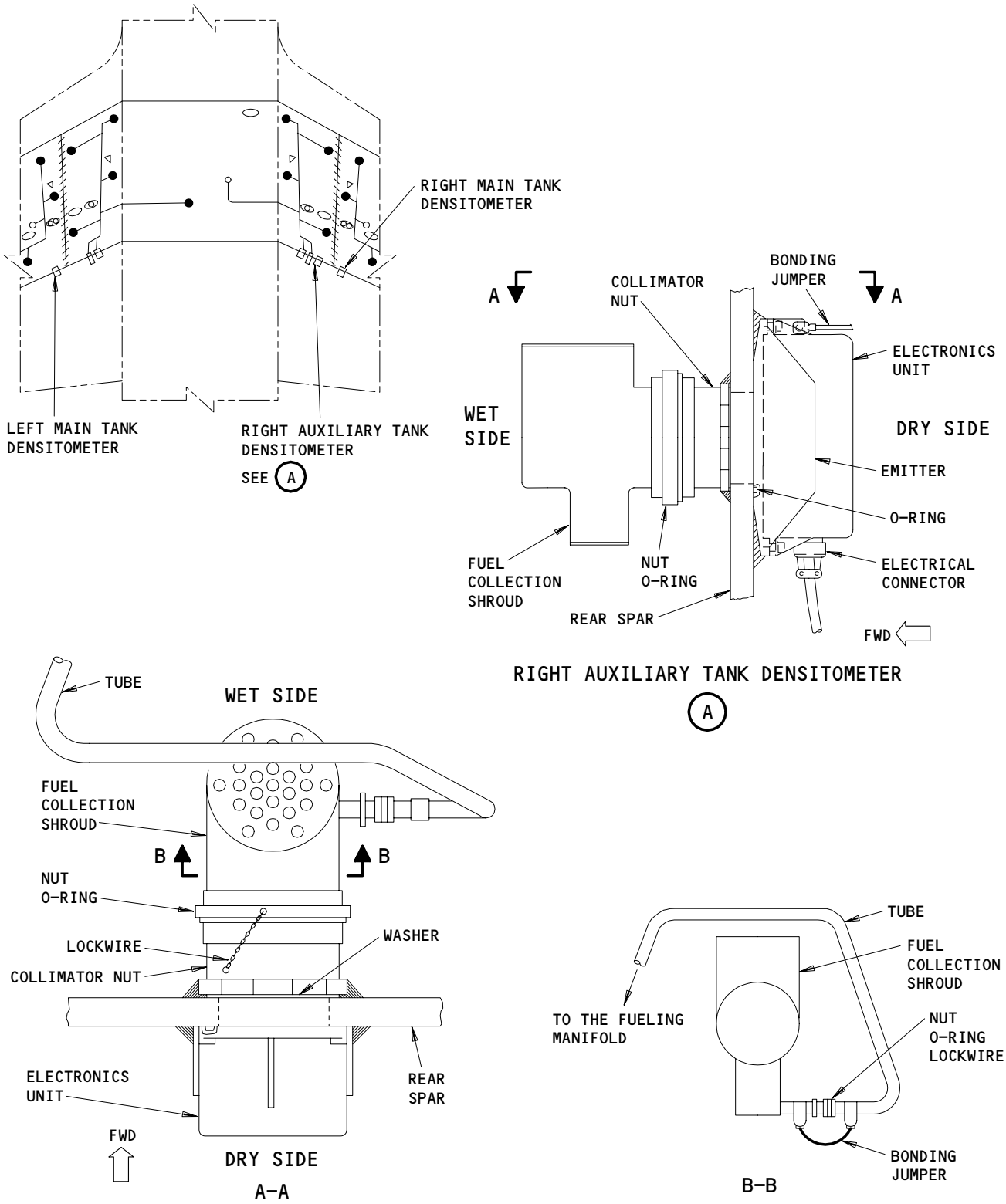

Fuel Collection Shroud
Figure 6A

EFFECTIVITY
SAS 050, 051, 151-157, 162-167;
MTH 275-278, 280

A32511

BOEING PROPRIETARY - Copyright (C) - Unpublished Work - See title page for details.

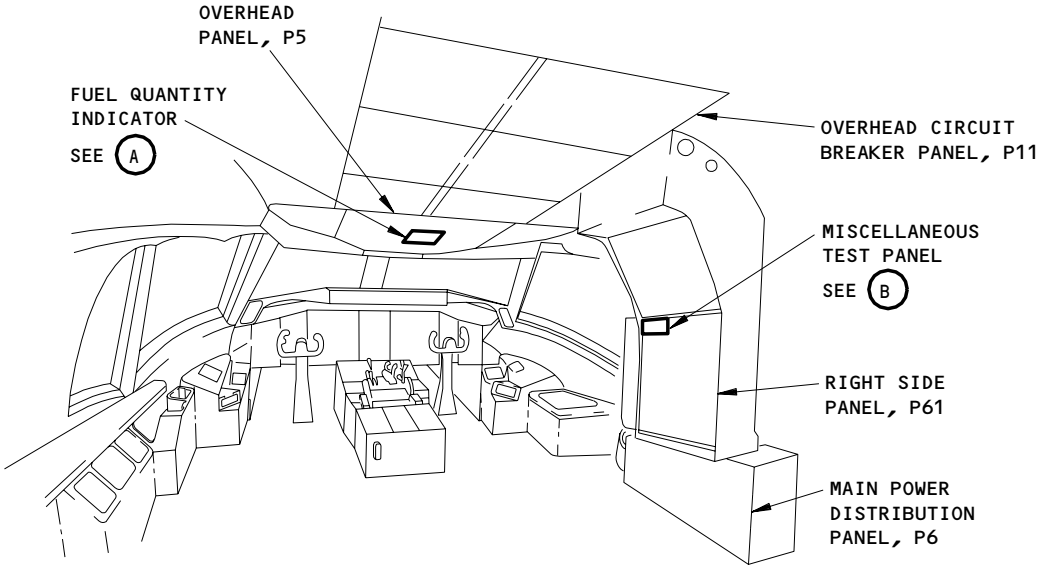

FLIGHT COMPARTMENT

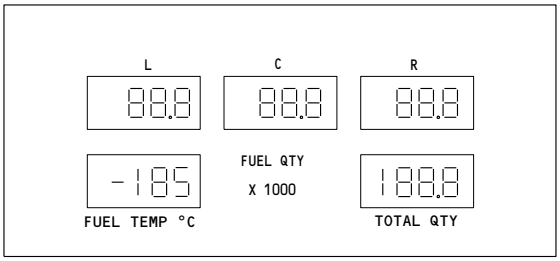

FUEL QUANTITY INDICATOR

A

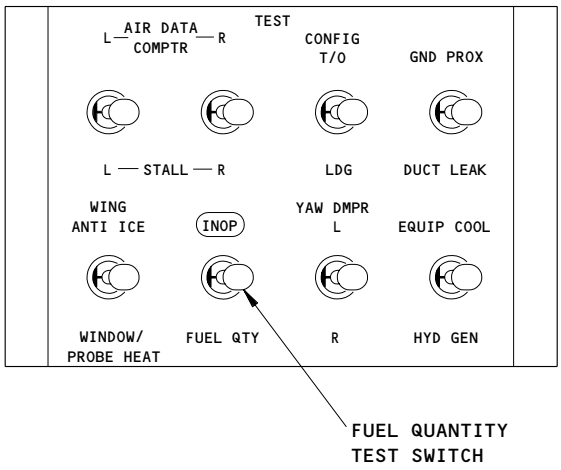

MISCELLANEOUS TEST PANEL
(EXAMPLE)

B

Fuel Quantity Indicator
Figure 7

BOEING PROPRIETARY - Copyright (C) - Unpublished Work - See title page for details.

(g) The EICAS status message FUEL QTY CHANNEL will show.
(h) The EICAS maintenance message FUEL QTY BITE will show.

NOTE: In order to view the EICAS maintenance message FUEL QTY BITE, 45 seconds must elapse before you put the FUEL QTY test switch in the FUEL QTY position again. Then the ECS/MSG switch on the right side panel, P61, must be immediately pushed and released.

(i) The FQIS processor will do a VERIFY test on the fuel quantity indicating system.

NOTE: The FQIS processor will not do a VERIFY test if the fueling station door is open or if the VERIFY switch on the FQIS processor has just been pushed. The VERIFY test will be completed in approximately 45 seconds.

(3) The FUEL QTY test switch has a time out of approximately 8 seconds. After approximately 8 seconds, the fuel quantity indicator and all other displays will go back to their previous condition. This 8 second time out is to prevent a broken FUEL QTY test switch from disabling the fuel quantity indicator and the other displays.
(4) If before you use the FUEL QTY test switch, a fault had caused the fuel quantity indicator to blank, then the fuel quantity indicator may give a false reading until the VERIFY test is completed. If the fault still exists after the VERIFY test, then the fuel quantity indicator will blank again.
(5) Once the FUEL QTY test switch is used, 45 seconds must elapse before using the FUEL QTY test switch again. If you use the FUEL QTY test switch more than once in a 45 second time frame it will introduce nuisance fault codes and nuisance status codes into the FQIS processor.
(6) AIRPLANES WITH PROCESSOR S345T002-41, -42, -43, -46, -47 OR -60;
To prevent the nuisance fault codes and the nuisance status codes, do not push the VERIFY switch on the processor until 45 seconds after these conditions:
(a) Changes in electrical power input.

BOEING PROPRIETARY - Copyright (C) - Unpublished Work - See title page for details.

(b) Airplane power-up.
(c) Fuel quantity processor power up.
(d) When the fueling station door is opened or closed.
(e) Operation of the battery switch, S345, on the fueling control panel, P28.
(f) Operation of the FUEL QTY test switch on the P61 panel.

I. Load Select Indicator (Fig. 8)

(1) One load select indicator found on the fueling control panel, P28, supplies indication of each tank's fuel quantity and fuel load selected.

(2) There are two black-on-white LCD's for each load select indicator. The upper display shows fuel quantity in each fuel tank in LBS (KGS) x 1000. The lower display shows the fuel quantity selected to be loaded into the fuel tank in LBS (KGS) x 1000. A 7-1/2 watt, automatically controlled heater assures correct LCD operation in cold weather. Four permanently installed incandescent lamps provide indicator lighting. Power is applied to the load select indicators whenever the fueling station door is opened.

(3) To test the load select indicators, push the TEST IND switch on the fueling control panel, P28. The upper and lower displays of the load select indicators should both show 88.8.

J. Load Select Control (Fig. 9)

(1) The load select control is found on the P28 panel in the fueling station.

(2) The load select control has an explosionproof case with a flame arrestor type breathing plug. The case houses three thumbwheel type switches, three resistor boards, and an electrical connector.

(3) The load select control permits the fueling crew to select the quantity of fuel to be loaded into each individual tank. This is accomplished by setting the thumbwheel switches and depressing the set switches. The load select control then sends an analog signal to the processor unit representive of the fuel to be loaded.

K. Fuel Quantity Processor Unit (FQPU) (Fig. 10)

(1) The fuel quantity processor unit (FQPU, referred to as "the processor") is a digital, dual channel computer which uses an 8-bit microprocessor as the central processing unit. Memory provisions include; read only memory (ROM) for storing the programs, random access memory (RAM) for scratchpad functions, and electrically alterable read only memory (EAROM) for storing faults. All input/output ports on the processor are memory mapped. There are two 8-bit output ports, and one single bit and four 8-bit input ports.

BOEING PROPRIETARY - Copyright (C) - Unpublished Work - See title page for details.

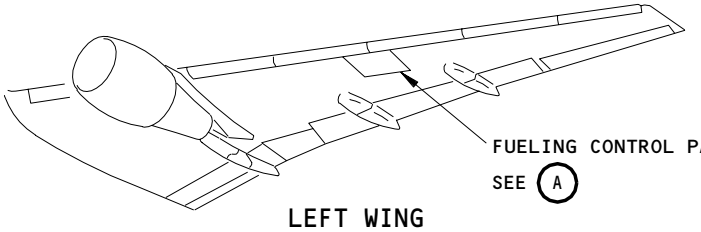

LEFT WING

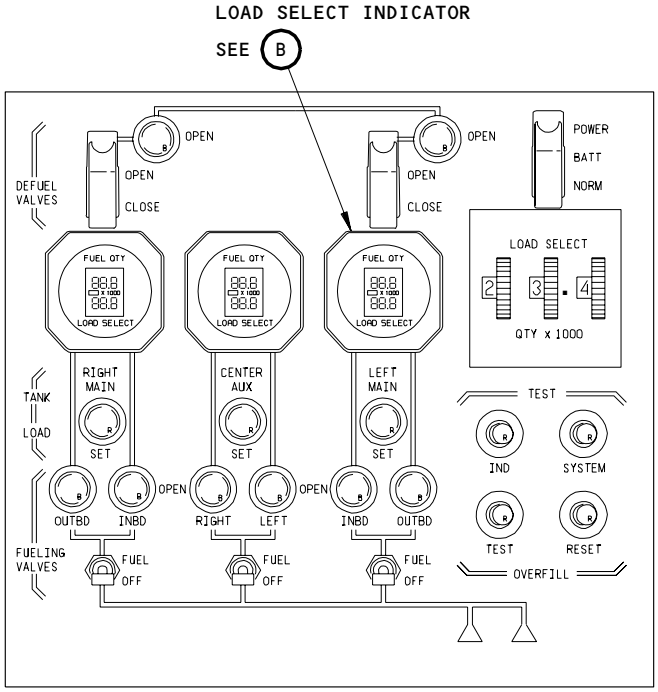

FUELING CONTROL PANEL, P28

A

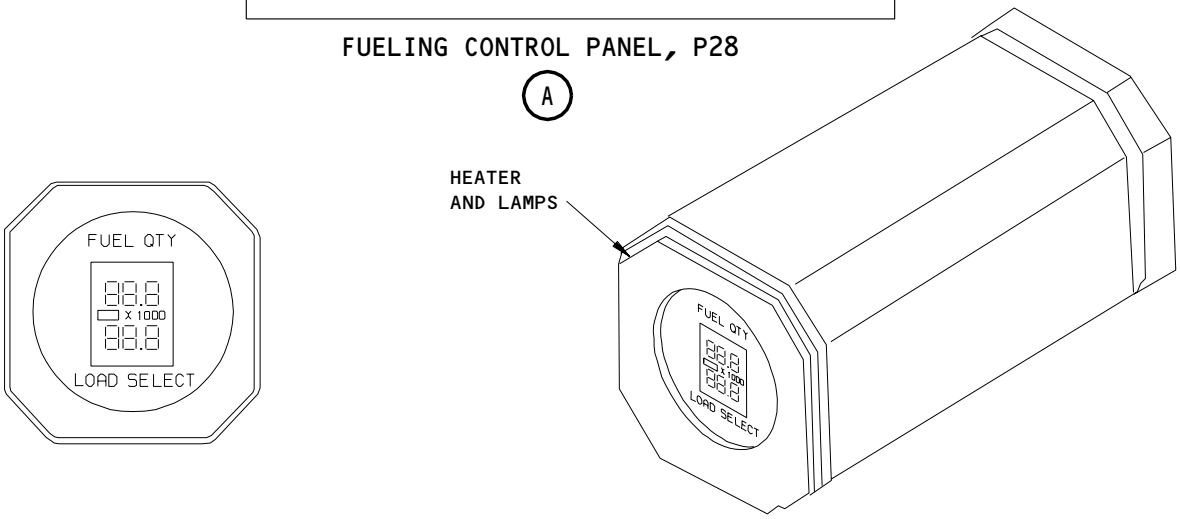

LOAD SELECT INDICATOR

B

Load Select Indicator
Figure 8

BOEING PROPRIETARY - Copyright (C) - Unpublished Work - See title page for details.

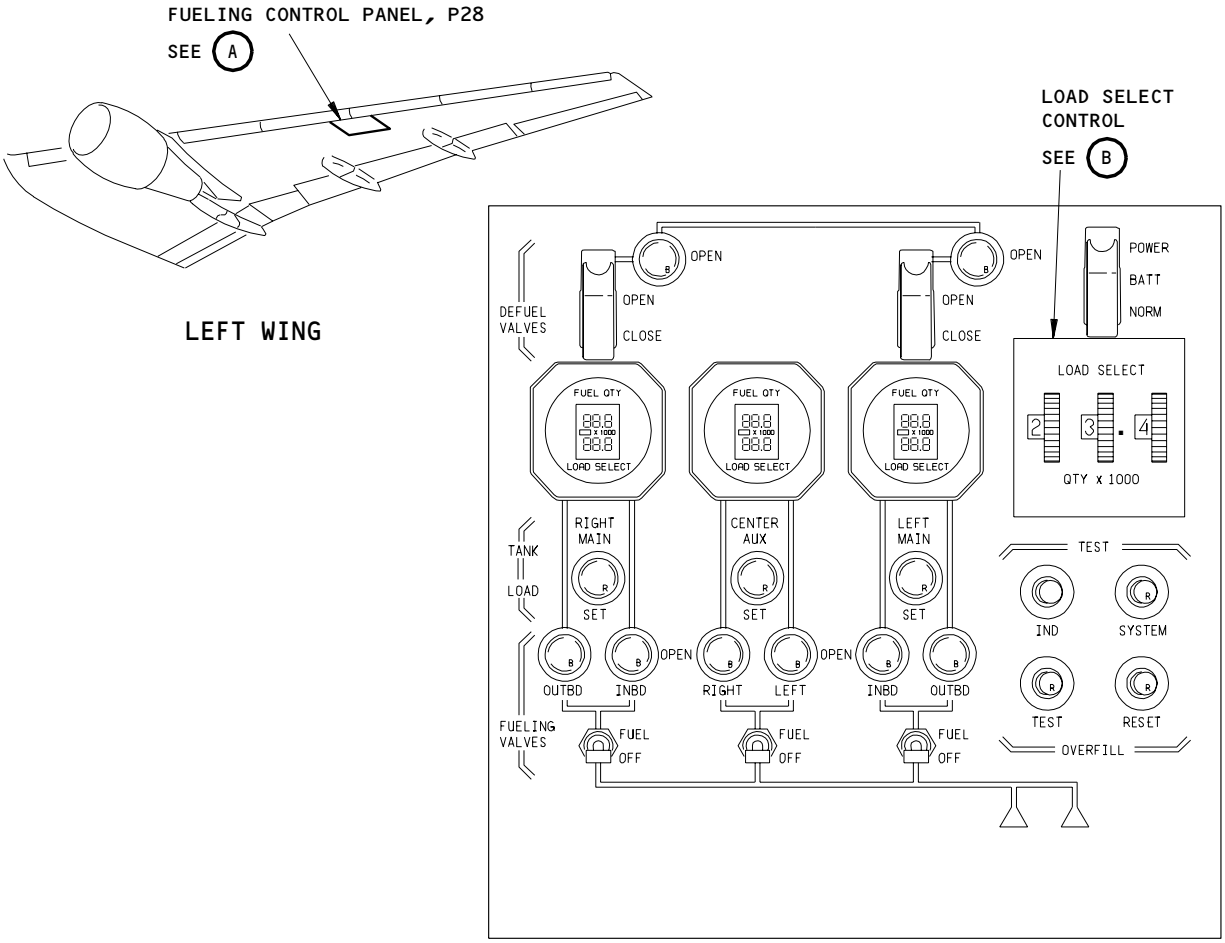

FUELING CONTROL PANEL, P28

A

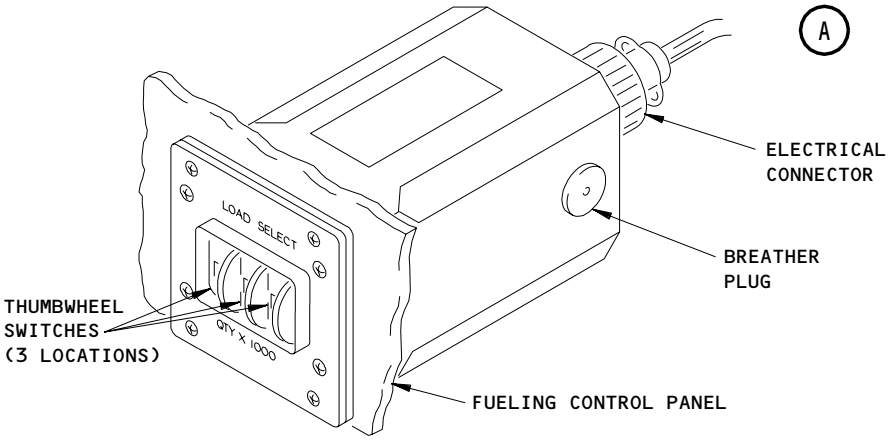

LOAD SELECT CONTROL

B

Load Select Control
Figure 9

BOEING PROPRIETARY - Copyright (C) - Unpublished Work - See title page for details.

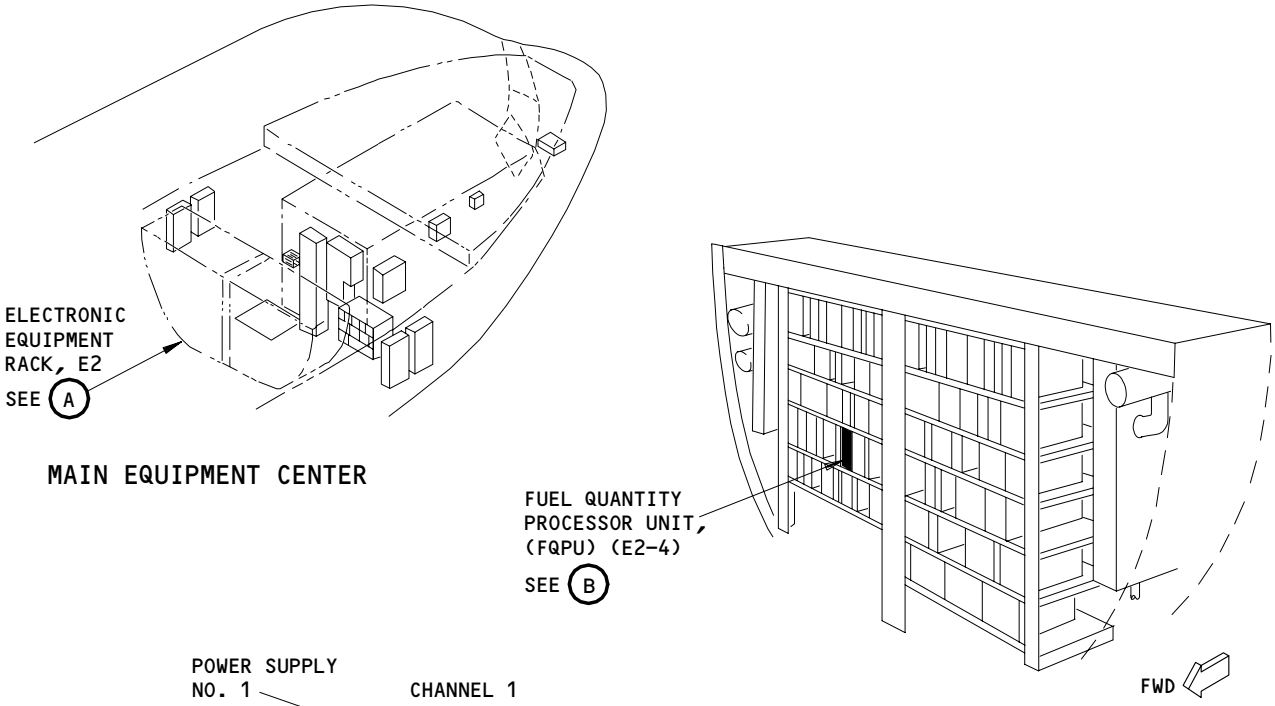

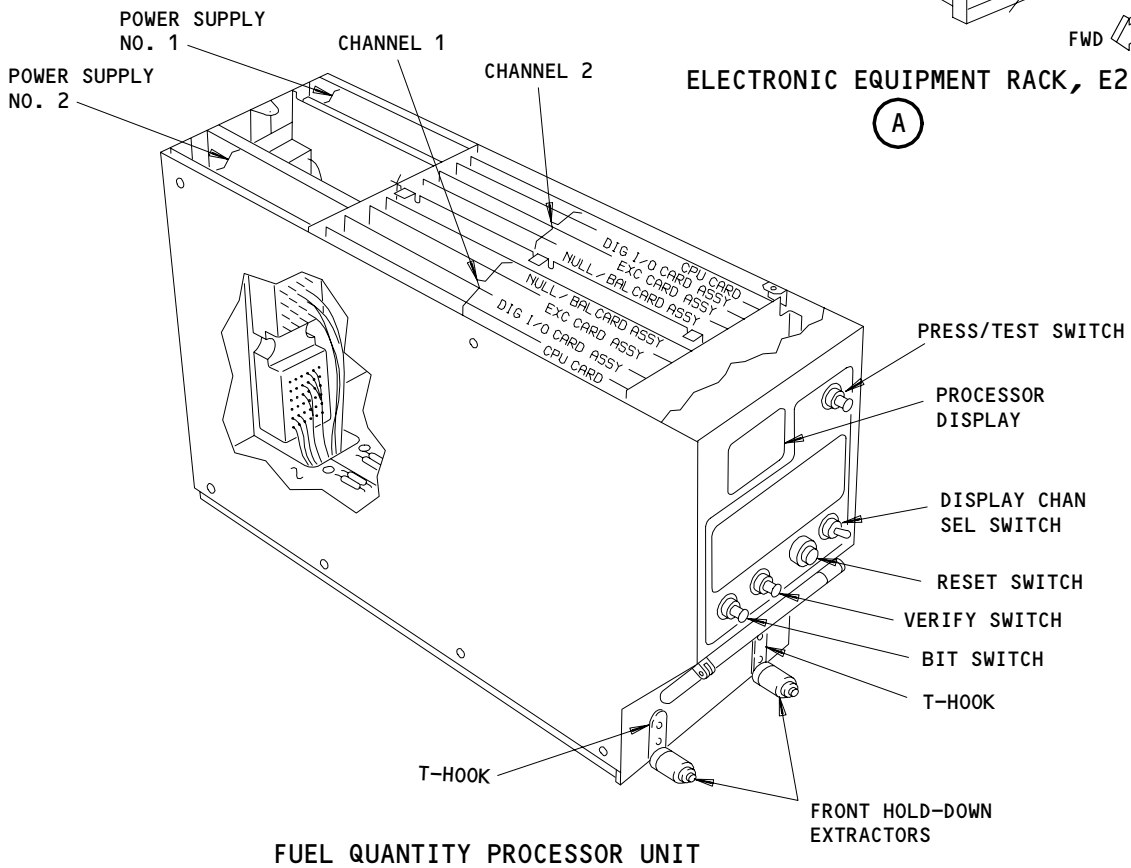

Fuel Quantity Processor Unit (FQPU)
Figure 10

BOEING PROPRIETARY - Copyright (C) - Unpublished Work - See title page for details.

(2) The processor needs 45 watts of power at 28 volts dc.

(3) The processor is installed on the E2-4 shelf in the main equipment center. Two hold-down hooks at the front of the processor attach the processor on the rack. An ARINC 600-1 style 2 connector, found at the back of the FQIS processor, connects it through a special wiring harness with the other components of the FQIS. The FQIS processor's front panel houses the control and display for the system's built-in test. Fault and status codes are shown on an LED matrix. Code explanation is supplied on a legend card found below the LED.

(4) The processor has two separate channels to minimize the effects of single problems. Each channel has four cards, interconnected through a mother board, and separate power supply cards. These are the cards:

(a) The excitation card supplies signals to the compensator and tank units and to the load select control thumbwheel switches.

(b) The Null/Balance card measures the tank unit capacitance by comparing it to a known value. The card also transforms the analog signals from the load select control thumbwheel switches into a 12-bit digital word.

(c) The Digital Interface card digitizes analog inputs and acts as an interface between the FQIS processor and other FQIS components.

(d) The Central Processing Unit (CPU) card makes all computations for the FQIS.

(5) The processor uses primary inputs from the airplane and FQIS components to do these primary functions:

(a) Supply excitation signals to the tank units, compensators, and load select control.

(b) Receive data from the tank units, compensators, densitometers and load select control, do the necessary calculations, and then output fuel quantity data to the flight deck, flight management computer (FMC), and fueling control panel.

(c) Control fuel tank fueling shutoff valves and load select indicators during autofueling.

(d) Supply BIT function to isolate faults within the FQIS.

(e) Output fuel quantity data to the digital information transfer system (DITS).

(f) Supply signals to EICAS computer to show the LOW FUEL caution message and to the fuel management panel for illumination of FUEL CONFIG light when there is low fuel in one of the two main fuel tanks.

(g) Supply signals to EICAS computer to show the FUEL CONFIG advisory message and to the fuel management panel for illumination of FUEL CONFIG light when either of the subsequent occurs:

1) fuel imbalance between the left main fuel tank and the right main fuel tank.

2) fuel remaining in the auxiliary fuel tank while the tow override pump switches are in the OFF position.

BOEING PROPRIETARY - Copyright (C) - Unpublished Work - See title page for details.

(h) Supply signals to the EICAS computer to show the FUEL QTY CHANNEL, FUEL QTY IND, FUEL QTY BITE status messages and the FUEL QTY BITE maintenance message.

(6) Channels

(a) The processor has two channels that independently receives fuel measurement data, calculates the fuel quantity, and prepares the digital output data for possible transmission.

(b) The two channels receive the same data (are completely redundant). This condition makes sure that a problem at a single point does not cause the processor to operate incorrectly.

(c) Only one channel is necessary for FQIS operation.

(d) Only one channel is selected to transmit data.

(e) The two channels measure fuel in all fuel tanks but not in the same fuel tank at the same time.

(f) If a fault is found in one channel, then the processor automatically switches over to the other channel.

(g) Within the processor, each channel has its own power supply. If one channel loses its power supply, then the FQIS processor automatically switches over to the other channel.

(h) A cross-channel comparison is done continuously during processor operation. If the cross-channel comparison finds fuel quantity values outside of preset limits, then the channel with the lowest fuel quantity value is selected to transmit data. As a result of this, the EICAS status message FUEL QTY CHANNEL will show.

(i) At processor power-up, one channel is randomly selected (enabled) to transmit data.

(j) Upon landing of the airplane, the channel presently transmitting data is disabled and the other channel is enabled.

(k) Upon operation of the VERIFY switch on the processor, the channel presently transmitting data is disabled and the other channel is enabled.

(l) Upon operation of the FUEL QTY test switch on the right side panel, P61, the channel presently transmitting data is disabled and the other channel is enabled.

(m) Each channel has its own nonvolatile memory.

(n) Whenever a fault is found or fault data is received from the other channel, it is recorded into the nonvolatile memory (NVM). Whenever a fault found by a channel is recorded into its NVM, data on the fault is transmitted to the other channel. Neglecting transport delay, each channels NVM will contain identical fault data. Therefore, either channel may do the BIT operation. It is not necessary to do BIT on both channels since they should contain the same fault data.

BOEING PROPRIETARY - Copyright (C) - Unpublished Work - See title page for details.

(7) PRESS/TEST switch

(a) Use of the PRESS/TEST switch will check whether the selected channel of the processor is powered and whether all segments of the light emitting diode in the processor display are functioning correctly. A successful test occurs when 88 shows on the processor display. The PRESS/TEST switch can be used at any time. If the PRESS/TEST switch is held down for more than 7 seconds, the processor display will go off.

(8) DISPLAY CHAN SEL switch

(a) Use of the DISPLAY CHAN SEL switch manually selects (enables) which channel of the processor will be used to supply fuel quantity data and fault code data to the fuel quantity indicating system (FQIS). The position of the DISPLAY CHAN SEL switch is of no consequence to usual FQIS operation. To prevent nuisance fault codes and nuisance status codes, do not put the DISPLAY CHAN SEL switch to the opposite position unless the FQIS processor display is blank. The DISPLAY CHAN SEL switch is a two-position toggle switch.

(9) BIT switch

(a) Use of the BIT switch will recall all fault codes stored in the nonvolatile memory. With the processor powered and the processor display blank, pushing the BIT switch will show a fault code, if any exists. Additional fault codes are shown by repeatedly pushing the BIT switch. All fault codes will have been recalled when the status code 00 is shown. The status code 00 signifies the end of the BIT sequence. If the BIT switch is not pushed within 36 seconds after a code is shown, nonvolatile memory recall is deactivated and the processor display will go off.

(b) AIRPLANES WITH PROCESSOR S345T002-41, -42, -43, -46, -47, OR -60;
To prevent nuisance fault codes and nuisance status codes, do not move the DISPLAY CHAN SEL switch on the processor to the opposite position during the BIT procedure unless the processor display is off.

1) If you move the DISPLAY CHAN SEL switch in this way and if you push the VERIFY switch in the 45 seconds after you move the DISPLAY CHAN SEL switch, the nuisance status code F6 and the nuisance fault codes A1 or B1 can result.

BOEING PROPRIETARY - Copyright (C) - Unpublished Work - See title page for details.

2) If you move the DISPLAY CHAN SEL switch in this way and if you push the RESET switch in the 45 seconds after you move the DISPLAY CHAN SEL switch, the nuisance status code F3 can result.

(c) AIRPLANES WITH PROCESSOR S345T002-48, -49, OR -61;
DO NOT push the RESET or VERIFY switches on the processor during the BIT procedure unless the processor display is off. If you push these switches, the fault code data will be lost or incorrect.

1) If you push the RESET switch during the BIT procedure, the BIT procedure will stop immediately. The RESET procedure will then start. The F1 status code will show on the display.

2) If you push the VERIFY switch during the BIT procedure, the BIT procedure will stop immediately. Then the VERIFY procedure will start. The F4 status code will show on the display.

(10) RESET switch

(a) Use of the RESET switch will clear all fault codes from the nonvolatile memory. Pushing the RESET switch will only supply a status code on the outcome or condition of the RESET operation. Pushing the RESET switch again will blank the processor display, if so desired. Once a fault condition has been corrected by maintenance action, the RESET switch should be used to clear that fault from the nonvolatile memory. Otherwise, that fault will remain stored in the nonvolatile memory and will result in confusion in subsequent maintenance operations.

(b) DO NOT push the RESET switch on the fuel quantity processor unit (FQPU) before you make a written record of all fault codes. When you push the RESET switch, it will erase all the fault codes kept in the FQPU memory.

(11) VERIFY switch

(a) Use of the VERIFY switch will do a complete self-test of the fuel quantity indicating system as though the airplane was airborne. The fueling station door must be closed in order to do the VERIFY operation. The 28v dc battery bus must be supplying power to the processor in order to do the VERIFY operation. Pushing the VERIFY switch will only supply a status code on the outcome or condition of the self-test. If a status code F6 is obtained, it shows that faults exist, the faults must be recalled from the nonvolatile memory by doing a BIT operation.

(b) AIRPLANES WITH PROCESSOR S345T002-41, -42, -43, -46, -47 OR -60;
To prevent the nuisance fault codes and the nuisance status codes, do not push the VERIFY switch on the processor until 45 seconds after these conditions:

1) Changes in electrical power input.

2) Airplane power-up.

3) Fuel quantity processor power up.

BOEING PROPRIETARY - Copyright (C) - Unpublished Work - See title page for details.

4) When the fueling station door is opened or closed.
5) Operation of the battery switch, S345, on the fueling control panel, P28.
6) Operation of the FUEL QTY test switch on the P61 panel.

(12) Initiation of any BITE procedure (BIT, VERIFY, or RESET) requires that the processor display be blank.

(13) The PRESS/TEST, BIT, VERIFY, and RESET switches on the FQIS processor must be held down for a minimum of one second in order to activate the desired operation. This is because it takes the FQIS processor one second to supply a ground for the fuel quantity indicating system.

(14) AIRPLANES WITH PROCESSORS S345T002-41, -42, -43, -46, -47 OR -60;
With the airplane on the ground and the fueling station door closed, fault codes will not be written into the processor memory. But the EICAS status message FUEL QTY IND or FUEL QTY CHANNEL will appear on the EICAS display if the corresponding fault occurs.

(15) AIRPLANES WITH PROCESSOR S345T002-48, -49, OR -61;
If the airplane is put into the air mode, the processor will go into a takeoff mode. In this takeoff mode, fault recording and changes in EICAS status messages will be inhibited for 8 minutes.

L. Tank Wiring Harness (Fig. 11)

(1) The location of the tank wiring harnesses are shown in Fig. 11.
(2) The left auxiliary tank wiring harness is shown in Fig. 11A.
(3) The right auxiliary tank wiring harness is shown in Fig. 11B.
(4) The left main tank wiring harness and the right main tank wiring harness are shown in Fig. 11C.
(5) The HI-Z bussing plug is shown in Fig. 11D.
(6) The breakdown between the airplane wiring harness and the tank wiring harness for the left main fuel tank is shown in Fig. 11E.
(7) A simplified schematic for the LO-Z and HI-Z wiring for the left main fuel tank is shown in Fig. 11F.
(8) The term LO-Z means low impedance.
(9) The term HI-Z means high impedance.
(10) The airplane wiring harness is found external to the fuel tank. The airplane wiring harness begins at the processor connector and terminates at the LO-Z connector plug and the HI-Z bussing plug. The LO-Z connector plug and HI-Z bussing plug are found on the dry side of the rear spar of the fuel tank.

BOEING PROPRIETARY - Copyright (C) - Unpublished Work - See title page for details.

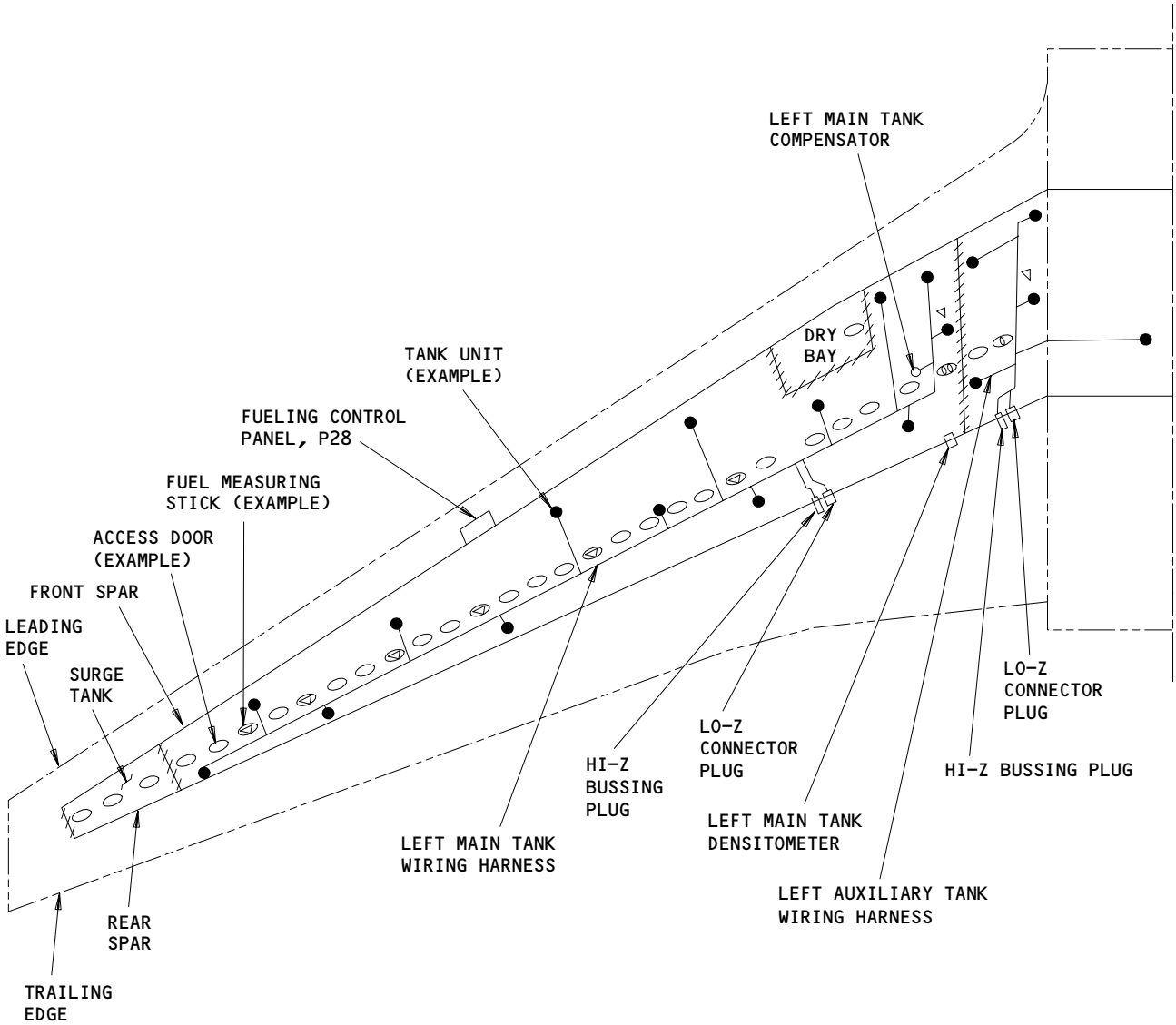

LEFT WING

Tank Wiring Harness
Figure 11 (Sheet 1)

BOEING PROPRIETARY - Copyright (C) - Unpublished Work - See title page for details.

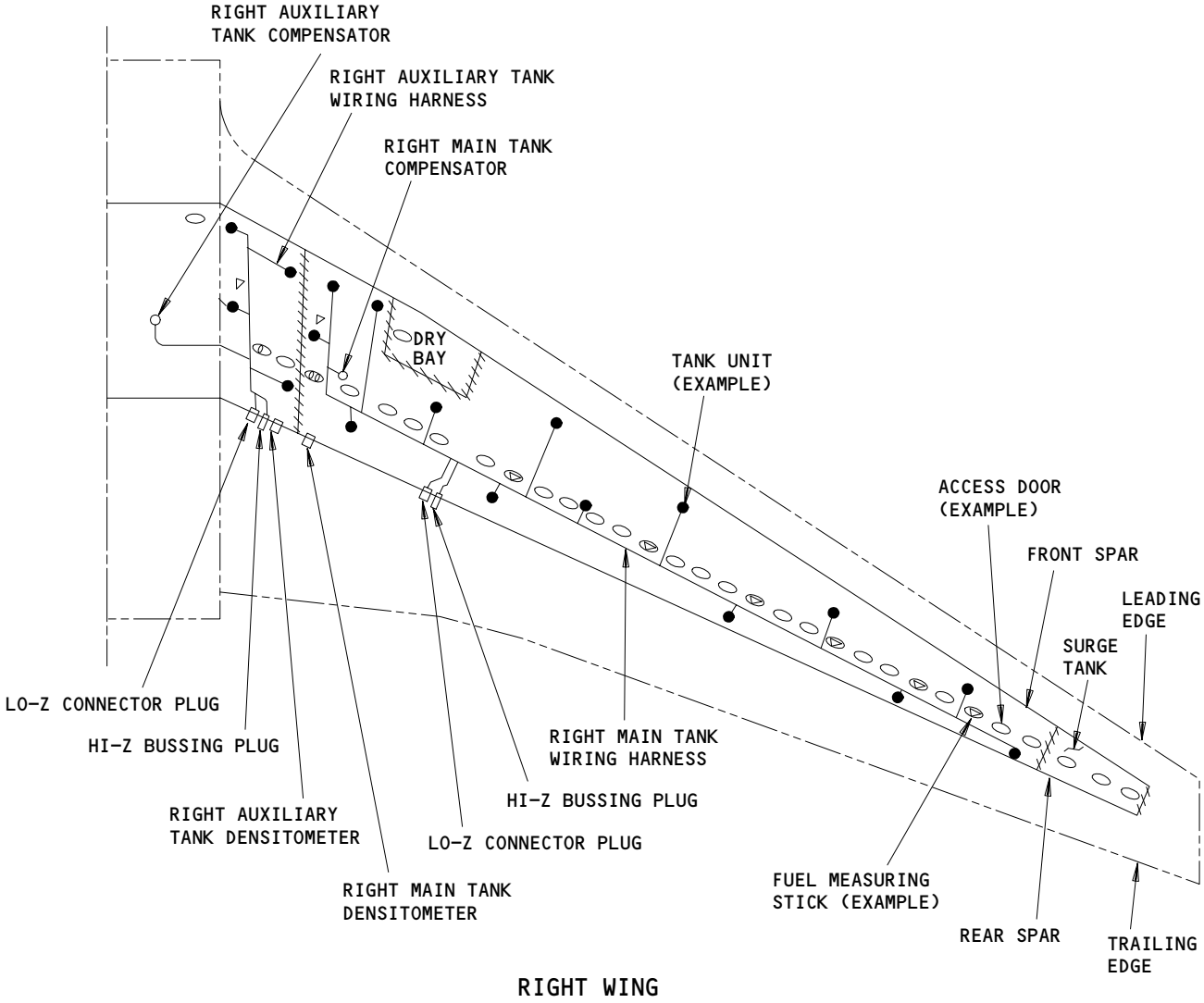

Tank Wiring Harness
Figure 11 (Sheet 2)

BOEING PROPRIETARY - Copyright (C) - Unpublished Work - See title page for details.

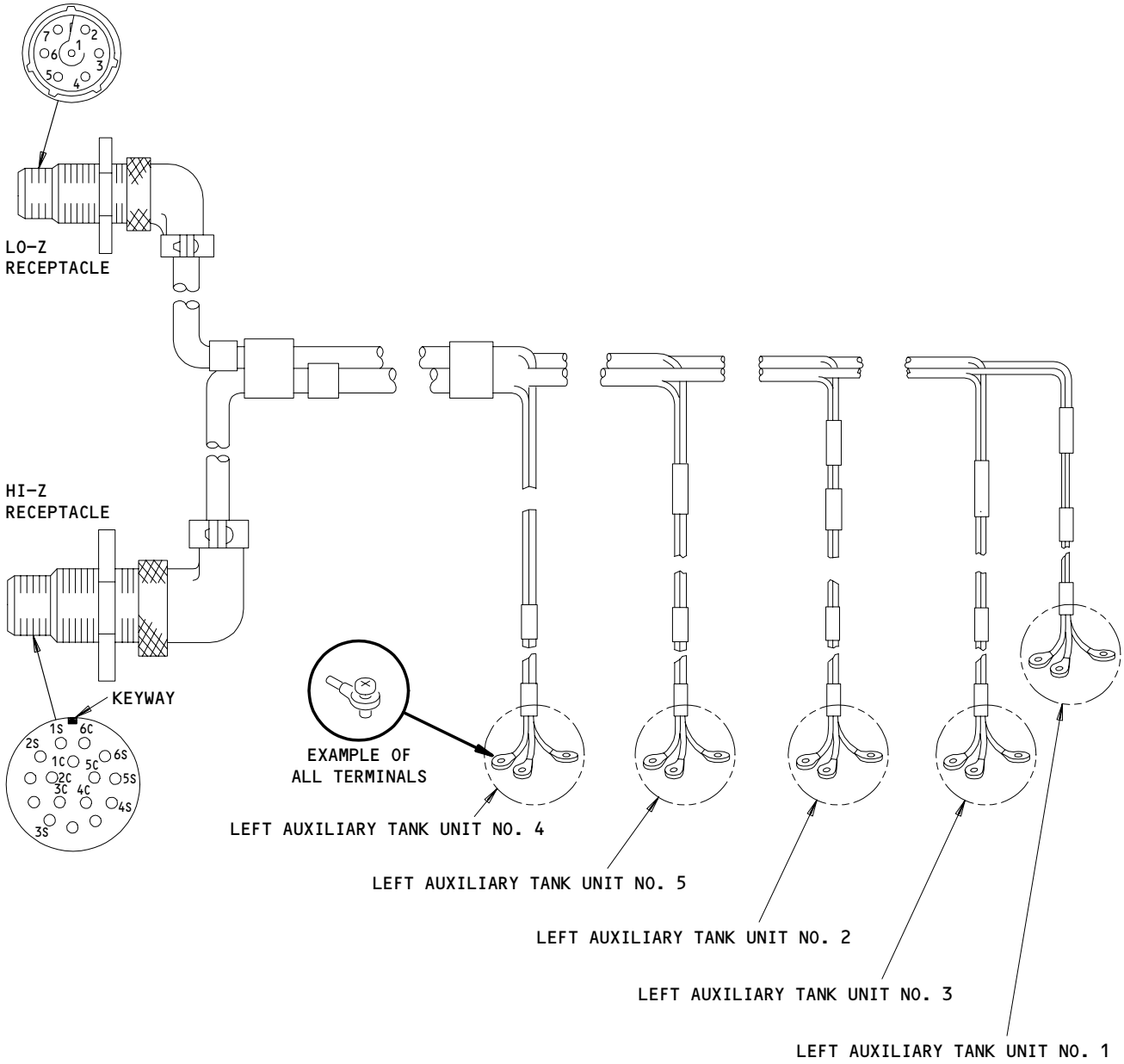

Left Auxiliary Tank Wiring Harness
Figure 11A

BOEING PROPRIETARY - Copyright (C) - Unpublished Work - See title page for details.

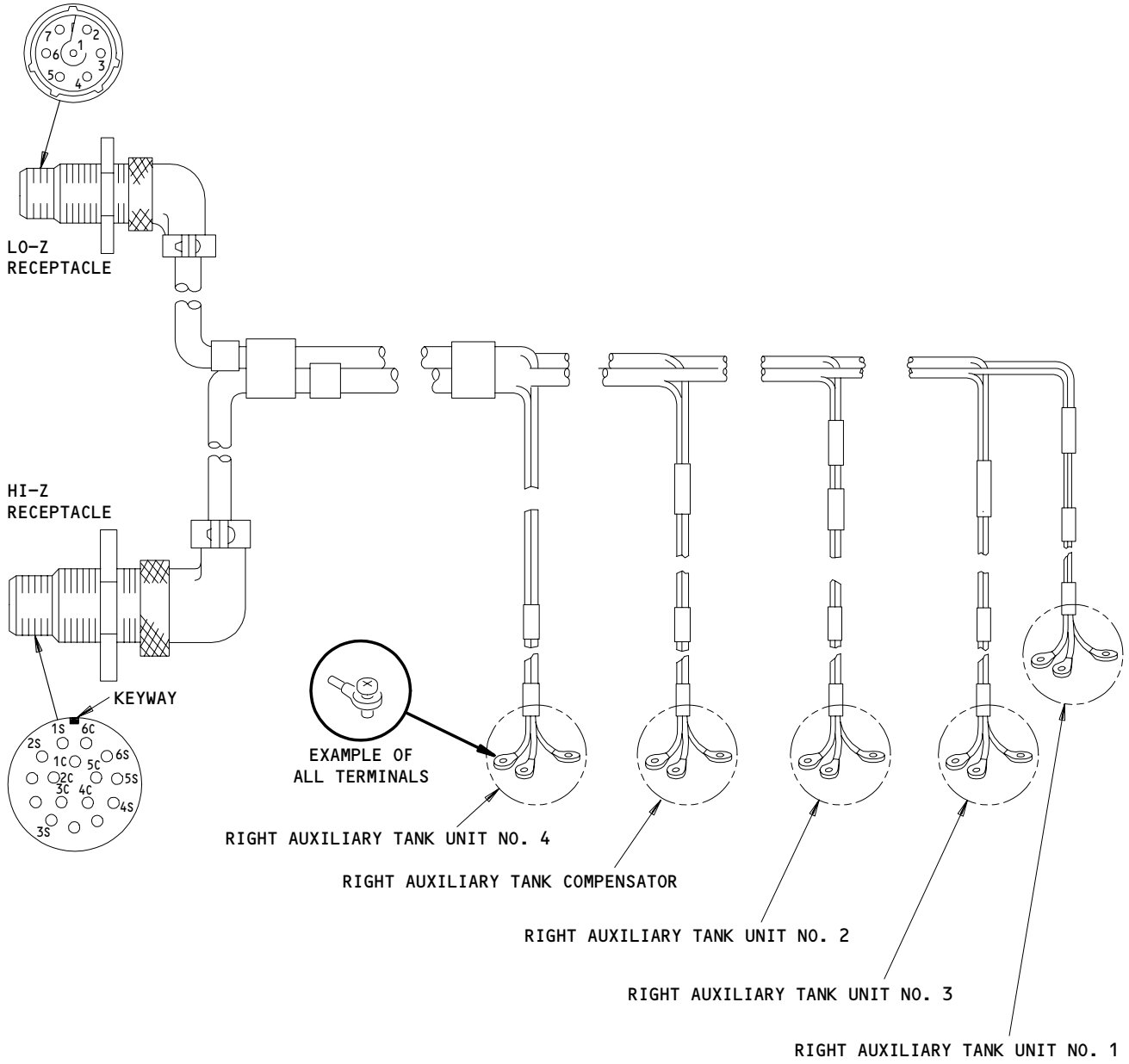

Right Auxiliary Tank Wiring Harness
Figure 11B

BOEING PROPRIETARY - Copyright (C) - Unpublished Work - See title page for details.

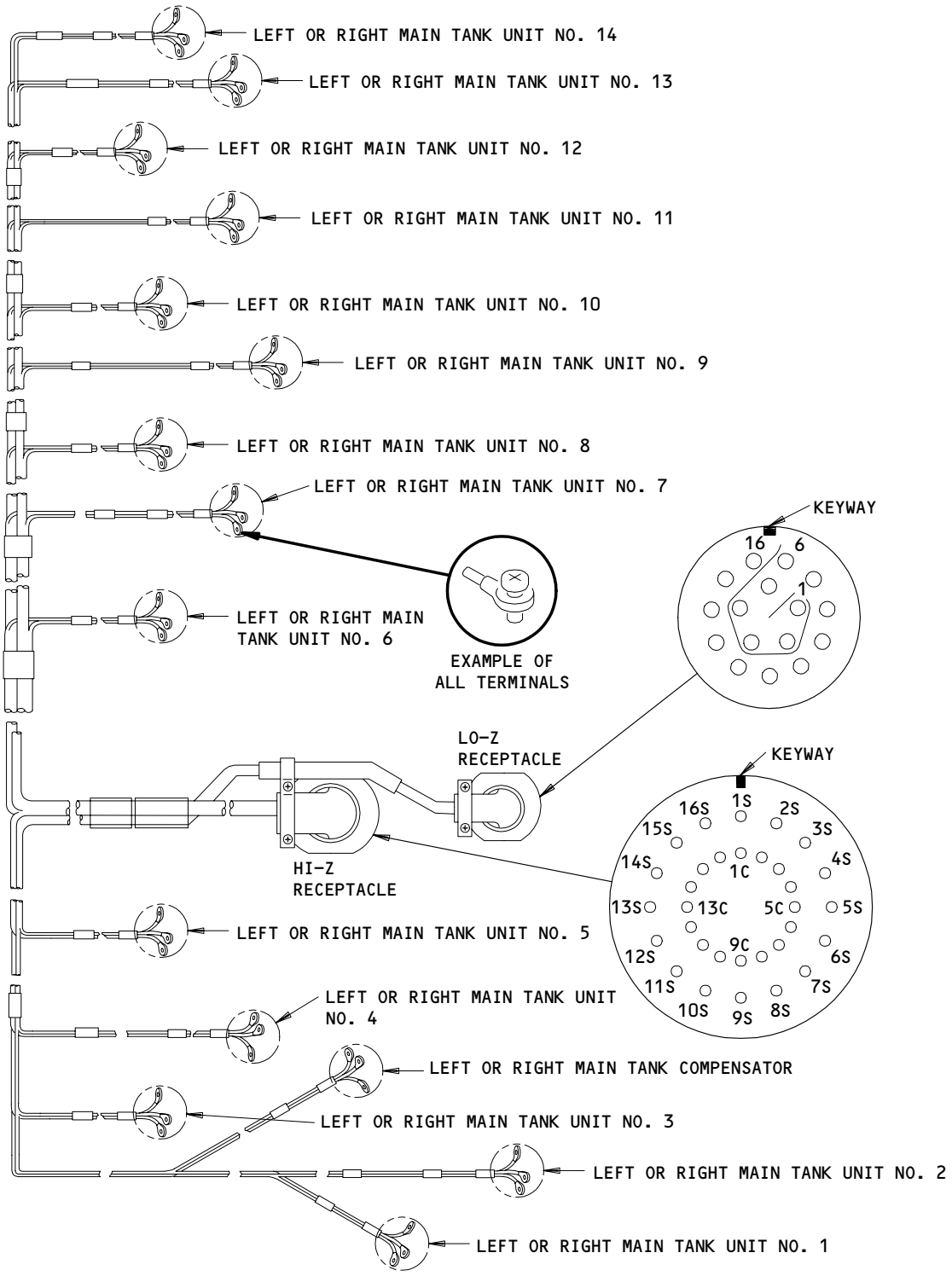

Left or Right Main Tank Wiring Harness
Figure 11C

BOEING PROPRIETARY - Copyright (C) - Unpublished Work - See title page for details.

(11) The tank wiring harness is found internal to the fuel tank. The tank wiring harness begins at the LO-Z and HI-Z receptacles and terminates at the LO-Z, HI-Z shield, and HI-Z terminals on the tank units and compensator.
(12) The HI-Z bussing plug connects with the HI-Z receptacle of the tank wiring harness.
(13) The LO-Z connector plug connects with the LO-Z receptacle of the tank wiring harness.
(14) The tank wiring harnesses are installed and sealed in each applicable fuel tank.
(15) The FQIS processor sends an 18.75 kHz excitation signal to the tank units and compensators through the LO-Z wiring.
(16) The HI-Z wiring carries the return signal from the tank units and compensators to the processor.
(17) The LO-Z wiring is individually routed from the processor to the tank units and compensators.
(18) The HI-Z wiring is individually routed from the tank units and compensator to the HI-Z bussing plug. The HI-Z bussing plug combines all HI-Z center conductors and HI-Z shields into one common HI-Z wire which is routed to the processor.
(19) The tank wiring harness does not require and is not authorized for any on-line or field calibration.

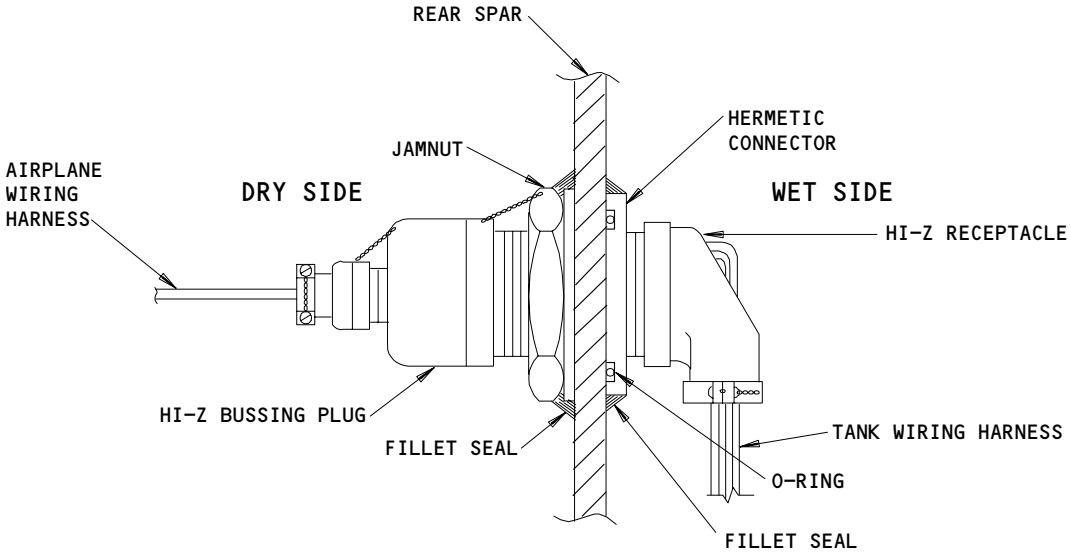

HI-Z Bussing Plug
Figure 11D

BOEING PROPRIETARY - Copyright (C) - Unpublished Work - See title page for details.

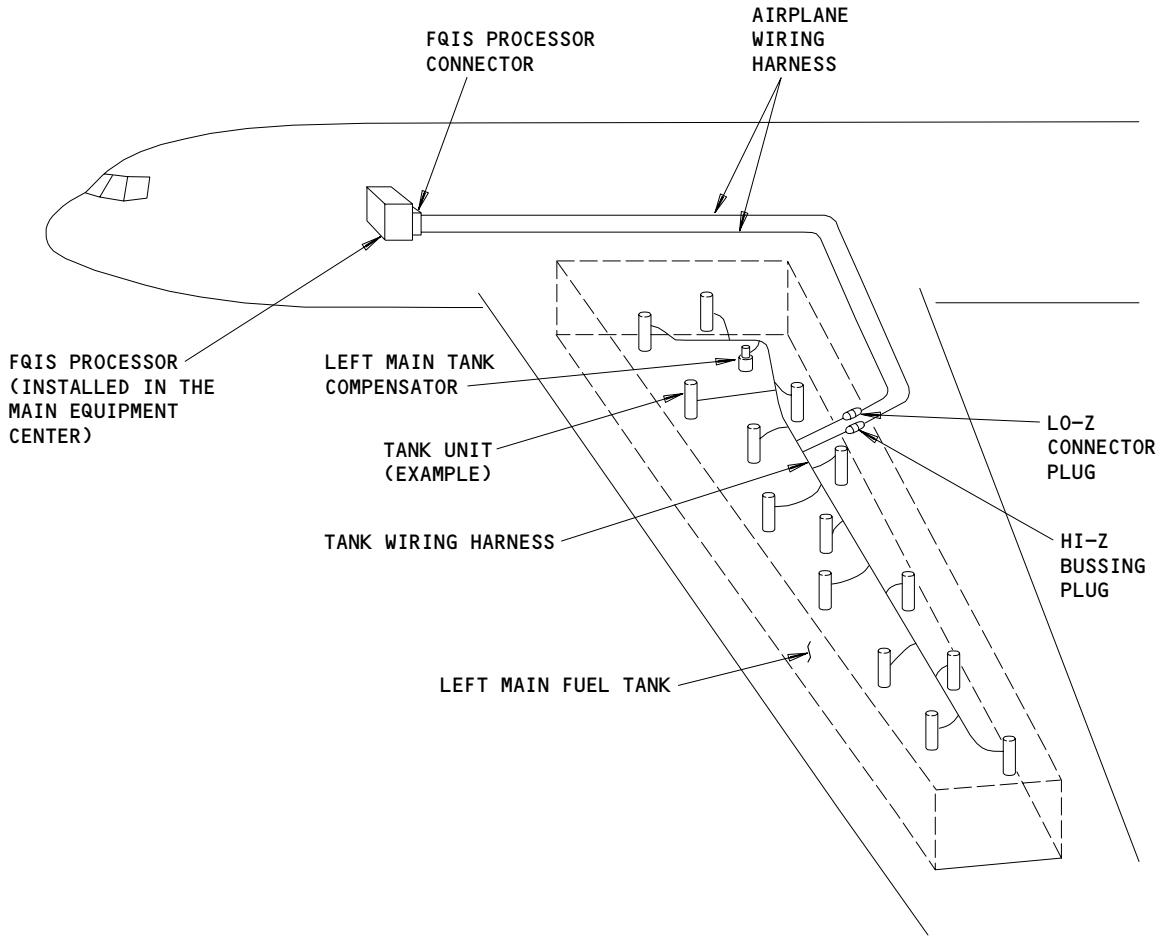

Airplane Wiring Harness and Tank Wiring Harness for the Left Main Fuel Tank
Figure 11E

BOEING PROPRIETARY - Copyright (C) - Unpublished Work - See title page for details.

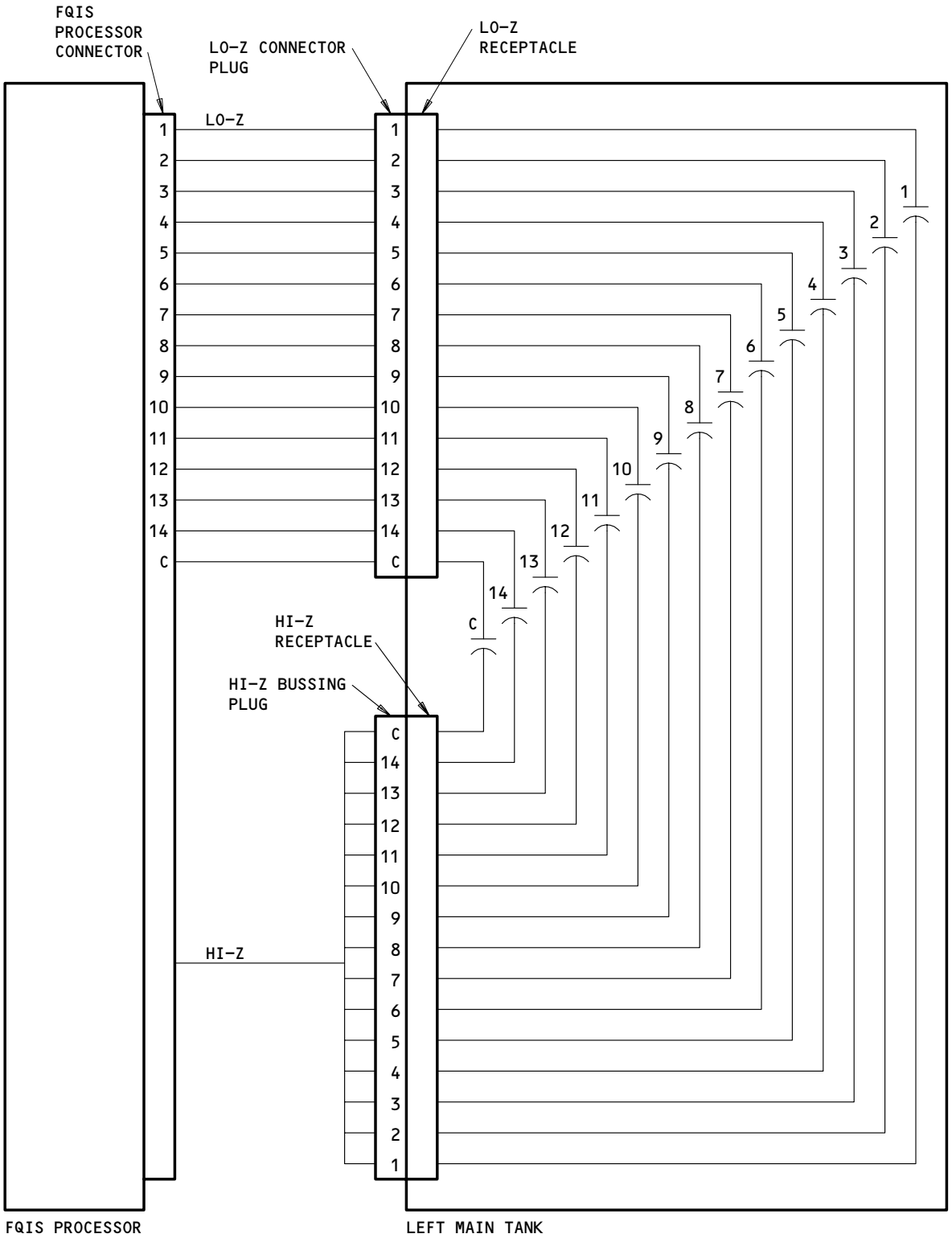

Lo-Z and Hi-Z Wiring for the Left Main Tank (Simplified Schematic)
Figure 11F

BOEING PROPRIETARY - Copyright (C) - Unpublished Work - See title page for details.

(20) The end terminals of the tank wiring harness at the tank units or compensators can be repaired by replacement of the end terminals. Any other damage to the tank wiring harness will result in replacement of the harness.

(21) Any corrosion or damage to the airplane wiring harness or the tank wiring harness can result in nuisance fault codes and nuisance status codes.

(22) Any damage to the connector pins at the processor connector, HI-Z bussing plug, or LO-Z connector plug can result in nuisance fault codes and nuisance status codes.

(23) The tank wiring harnesses must be carefully installed and secured. An improperly installed, loose, or damaged tank wiring harness can introduce stray capacitance which would affect system accuracy.

(24) Improper installation of a tank wiring harness can result in nuisance fault codes and nuisance status codes. For instance, a poorly secured connection of the tank wiring harness to the LO-Z, HI-Z shield, and HI-Z terminals of a tank unit or compensator can result in nuisance fault codes and nuisance status codes.

3. Operation (Fig. 12)

A. Functional Description

(1) Fuel Quantity Processor Unit (FQPU) Operation

(a) The fuel quantity processor unit (FQPU, referred to as "the processor") operates whenever the system receives power. No flight crew operator actions are required for the processor to compute and show fuel quantity.

(b) Power requirements for the processor, 28 volt dc, normally comes from the battery bus, and the right main bus. During fueling operations, the power source for the processor comes from the ground handling bus and the hot battery bus.

(c) The battery bus normally supplies power to channel 1 in the processor, and the right main bus supplies power to channel 2. Either channel can supply processing for fuel quantity indication.

(d) Each power supply in the processor powers the control relay of one of the two fueling shutoff valves in each fuel tank. Therefore the two power supplies are necessary to use the two fueling shutoff valves during the automatic fueling mode with volumetric cutoff.

(e) If a wiring fault exists for 70 seconds or more, the fuel quantity indicator will blank and the EICAS message FUEL QTY IND will show. If a wiring fault exists for less than 70 seconds, the fuel quantity indicator will not blank and the EICAS message FUEL QTY IND will not show. This is to prevent intermittent wiring faults from affecting in-flight fuel quantity indications. For maintenance purposes, any wiring fault detected, even those lasting less than 70 seconds, will be recorded by the FQIS processor and accompanied by the EICAS message FUEL QTY BITE.

BOEING PROPRIETARY - Copyright (C) - Unpublished Work - See title page for details.

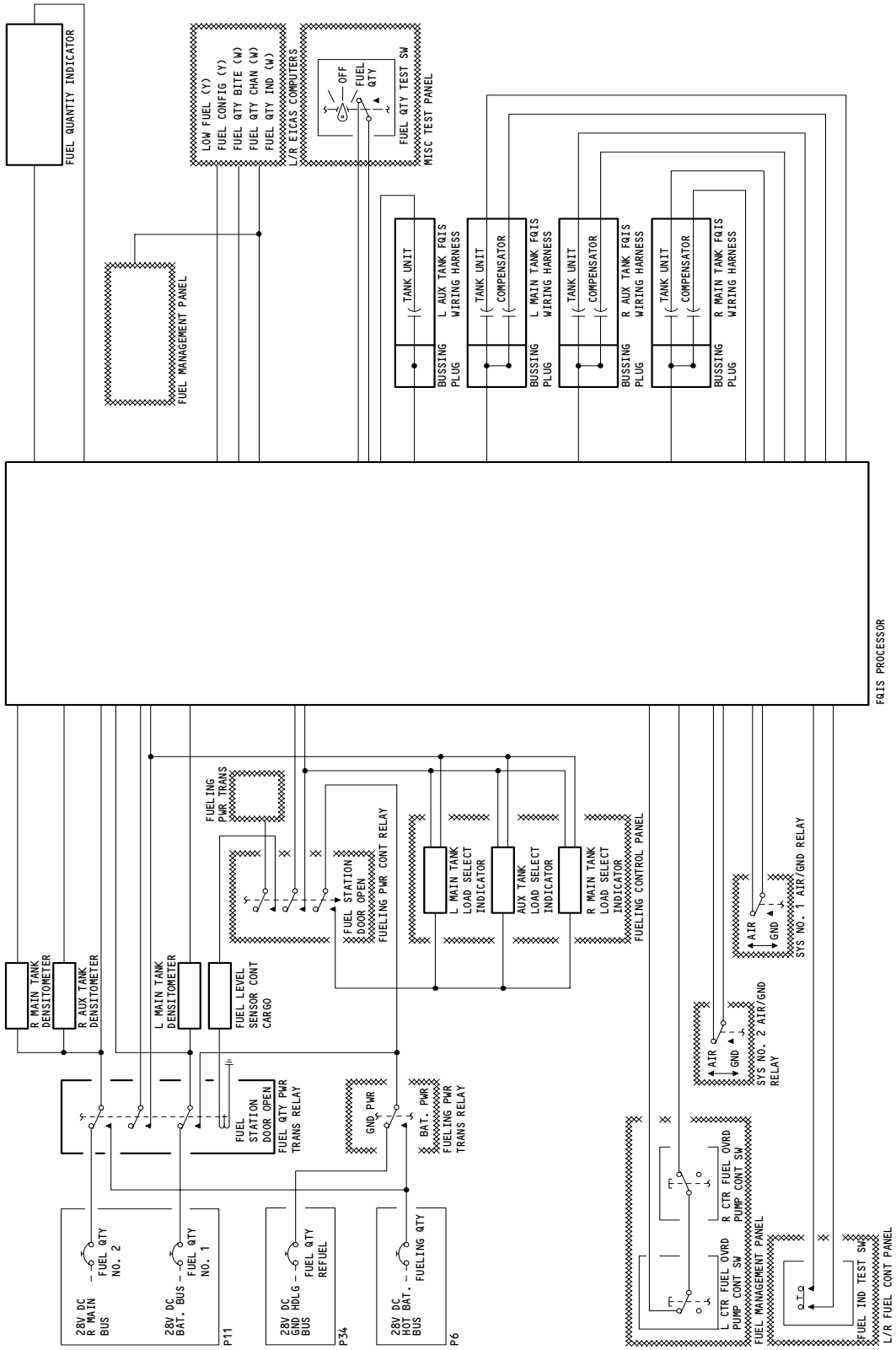

Fuel Quantity Indicating System (FQIS) Schematic
Figure 12

A33366

BOEING PROPRIETARY - Copyright (C) - Unpublished Work - See title page for details.

(2) FQIS Time Sharing

(a) The processor uses a major time cycle of 1024 milliseconds to read, compute and test all functions. The processor divides the time cycle equally among the three fuel tanks, 342 milliseconds for each fuel tank. Further time breakdown is as follows: 17 MSEC for each tank unit and compensator, 5 MSEC for load select and 17 MSEC for data transmission.

(b) Each processor channel reads for one fuel tank, computes weight for a different tank and also tests and outputs during each one third of the major cycle.

(3) Fuel Volume Measurement

(a) The compensator and tank units receive an excitation signal of 5 volts peak at 18.75 KHz one unit at a time. The resulting AC signal through the capacitor is proportional to the capacitance of the compensator or the tank unit. The capacitance is proportional to the length of the compensator or the tank unit and the portion submerged in fuel.

(b) The compensator is usually fully below the surface of the fuel and is the first unit in the sequence to be excited. The resultant capacitance measurement is compared with the known dry capacitance (i.e. no fuel between the plates). From this date the CPU calculates the dielectric constant of the fuel within the fuel tank.

(c) If the compensator has contamination, or if the calculated value of the dielectric does not agree with the standard limits, the CPU ignores the calculated value and uses a reference tank dielectric value for subsequent computations. computations.

(d) Each tank unit represents a portion of the total tank volume. The variation in shape of each section and the difference in tank unit length (which effects the capacitance of the unit) are accounted for in software. The capacitance determined by the excitation signal is compared in software to the maximum value (full tank reading) to find the wetted sensing length (WSL). The CPU uses WSL, computed dielectric and tank geometry to find volume for that section. The individual sections are summed to get total tank volume.

BOEING PROPRIETARY - Copyright (C) - Unpublished Work - See title page for details.

(e) If a tank unit has contamination, or if the calculated WSL does not agree with the standard limits, the WSL is ignored. The CPU uses the capacitance value(s) of the tank unit(s) directly adjacent to the tank unit in question in order to calculate the probable capacitance of that tank unit. This is known as the sister probe method. From this calculated capacitance value, a WSL within reasonable limits should be obtained. The sister probe method is not used when two or more tank units have contamination.

(4) Calculation of Fuel Weight

(a) Fuel density is calculated by the CPU using data from the densitometer unit. Fuel weight is determined by multiplying volume times density. If the density value does not agree with the standard limits, a reference density ratio is used to compute density.

(b) When fuel volume is 5% or less of total tank volume, a graduated correction factor is subtracted from computed volume to make sure that the fuel gage does not show a volume other than zero when the fuel tank is empty.

(5) Fuel Quantity Display

(a) The digital interface card assembly changes the CPU calculated volume of fuel weight into a 16-bit data word. The clock pulses shift this data word into the fuel quantity indicator and the load select indicator one bit at a time. The fuel quantity indicator supplies an acknowledge signal to the digital interface card if the signal format is correct. The load select indicator does not return an acknowledge signal.

(b) After the data word is received, internal circuits of the indicators reformat the data as necessary to drive the appropriate display. The fuel quantity indicator shows each tank as well as total fuel weight. The load select indicator shows tank contents on the top line of the display. The bottom display shows selected quantity during automatic fueling. It remains blank in manual fueling.

(6) FQIS Fault Recovery

(a) Two independent channels of on-line electronics are supplied, so that if a fault is detected in one channel, automatic switchover to the other channel occurs.

BOEING PROPRIETARY - Copyright (C) - Unpublished Work - See title page for details.

(b) Loss of power also causes automatic changeover to the other power supply.

(c) If a tank unit is contaminated, the processor calculates the probable value of the failed tank unit by using the sister probe method. The sister probe method uses the value(s) of the tank unit(s) directly adjacent to the failed tank unit in order to calculate the probable value of that failed tank unit.

(d) If a compensator is contaminated, the processor substitutes the value from another compensator.

(e) If a densitometer is contaminated, the FQIS processor substitutes the value from another densitometer.

(7) FQIS Fault Detection

(a) The processor unit carries out almost all fault detection on the FQIS automatically. The processor continually tests the system and its components, while the FQIS functions. If a fault is detected, a maintenance message is sent to EICAS and the fault is stored in the computer memory for recall by the maintenance crew.

1) When the airplane is on the ground and the fueling station door is open, any existing faults will be recorded on the processor unit.

2) Approximately 61 seconds after airplane take-off, any existing faults will be recorded on the processor.

(b) To recall faults from memory, operate the built-in-test controls on the front panel of the processor as follows:

1) Pushing the PRESS TEST switch shows 88 on the fault and status code display indicating that the selected channel is powered and the display is working. Flip the DISPLAY CHAN SEL switch and repeat for the other channel.

2) Pushing the BIT switch shows the fault code, if a fault exists. Additional faults are shows by pushing the BIT switch for each fault stored.

3) Pushing the RESET switch clears all faults from memory.

4) Pushing the VERIFY switch carries out a complete system test and finds if a fault still exists.

BOEING PROPRIETARY - Copyright (C) - Unpublished Work - See title page for details.

(8) EICAS Messages (Fig. 12)

(a) The FQIS processor sends signals of low fuel and fuel configuration to the EICAS computer.

1) The EICAS computer will show a LOW FUEL caution message, and the FUEL CONFIG light will come on under the subsequent condition:

a) A low fuel signal is sent when the fuel in either main fuel tank is less than 2200 LBS (1000 KGS).

2) The EICAS computer will show a FUEL CONFIG advisory message, and the FUEL CONFIG light will come on with one of these conditions:

a) A fuel imbalance of 1500-2500 lbs (680-1134 kg) between the left and right main fuel tanks depending upon total main fuel tanks quantity.

b) Fuel remaining in the auxiliary fuel tank and the two override pump switches are in the OFF position.

3) The processor sends a maintenance required signal to EICAS if a fault occurs on FQIS.

a) The EICAS computer generates a FUEL QTY BITE maintenance message. The message will be shown with the airplane on the ground when the ECS/MSG switch on EICAS MAINT module on P61 panel is pushed.

b) The EICAS computer generates a FUEL QTY BITE status message. The message is displayed on the lower EICAS display whenever a fault in the FQIS is detected.

4. FQIS Accuracy Data

NOTE: The design accuracy of the fuel quantities is a function of ground or air mode and fuel level for the left and right main tanks.

FUEL QUANTITY ACCURACY		
GROUND MODE	L & R MAIN TANK	±419 LBS (±190 KGS)
	CENTER AUX TANK	±823 LBS (±373 KGS)
AIR MODE *[1]	L & R MAIN TANK > 13,500 LBS (6000 KGS)	±839 LBS (±380 KGS)
	L & R MAIN TANK < 13,500 LBS (6000 KGS)	±315 LBS (±143 KGS)
	CENTER AUX TANK	±1647 LBS (±747 KGS)

*[1] AT EXTREME AIRPLANE ATTITUDES (AIRPLANE PITCH IS MORE THAN +7 DEGREES OR LESS THAN -2 DEGREES, AIRPLANE ROLL IS MORE THAN +1 DEGREE OR LESS THAN -1 DEGREE), FUEL QUANTITY ACCURACY WILL DECREASE.

BOEING PROPRIETARY - Copyright (C) - Unpublished Work - See title page for details.

FUEL QUANTITY INDICATING SYSTEM (FQIS)- DESCRIPTION AND OPERATION

1. General (Fig. 1)
   A. The fuel quantity indicating system (FQIS) supplies fuel quantity measurement, calculation, and indication. The system contains tank units, compensators, densitometers, indicators, and a FQIS processor. The FQIS processor does quantity computation and fault isolation for the FQIS system. The FQIS processor also controls pressure fueling for the airplane (Ref 28-21-00).
   B. The fuel quantity indicating system is a microcomputer controlled system that uses the variable capacitance principle for fuel quantity measurement. The capacitance measured by the tank units is approximately proportional to the quantity of fuel in the fuel tank.
   C. The FQIS contains the FQIS processor, a fuel quantity indicator, 3 load select indicators, a load select control, 3 compensators, 3 densitometers, 7 tank wiring harnesses, and 37 tank units.
   D. The FQIS processor is the principle component of the FQIS. It is a microprocessor base computer, found in the main equipment center on the rack E3-4. The FQIS processor has an independent channel for each fuel tank so that a component failure or contamination in one fuel tank does not affect the quantity measurement for the other fuel tanks.
   E. The FQIS processor transmits excitation signals to and reads signals from the tank units and compensators; it also receives densitometer data and computes fuel volume and weight. The FQIS processor includes its own failure monitoring, and built-in test equipment (BITE). Fault isolation is supplied for all sensors and the fuel quantity indicator. Faults are kept in a non-volatile memory, for recall on demand by the maintenance crew. The FQIS processor supplies the subsequent outputs:
      (1) Signals to EICAS and the FUEL CONFIG light to warn of low fuel, fuel imbalance or fuel in the center fuel tank with the fuel override pumps off, or system faults.
      (2) Digital fuel quantity (primary and total) shown on the fuel quantity indicator on the overhead panel, P5.
      (3) Digital fuel load selected, shown on the load select indicators on the fueling control panel, P28.
      (4) Volumetric and fuel quantity shutoff signals sent to the fueling shutoff valves for automatic shutoff.
   F. The tank units and compensators are almost the same in construction and installation provisions. Both tank units and compensators are capacitance type sensors but the tank units sense the height of fuel in the tank and the compensators measure the dielectric constant of the fuel.
   G. The densitometer senses fuel density. Knowing the density and the volume of fuel lets the FQIS processor calculate the mass or weight of the fuel.
   H. A FUEL QTY test switch makes sure the flight compartment displays including EICAS messages can operate. This switch only does a check of the displays and does not show the condition of the FQIS system.

BOEING PROPRIETARY - Copyright (C) - Unpublished Work - See title page for details.

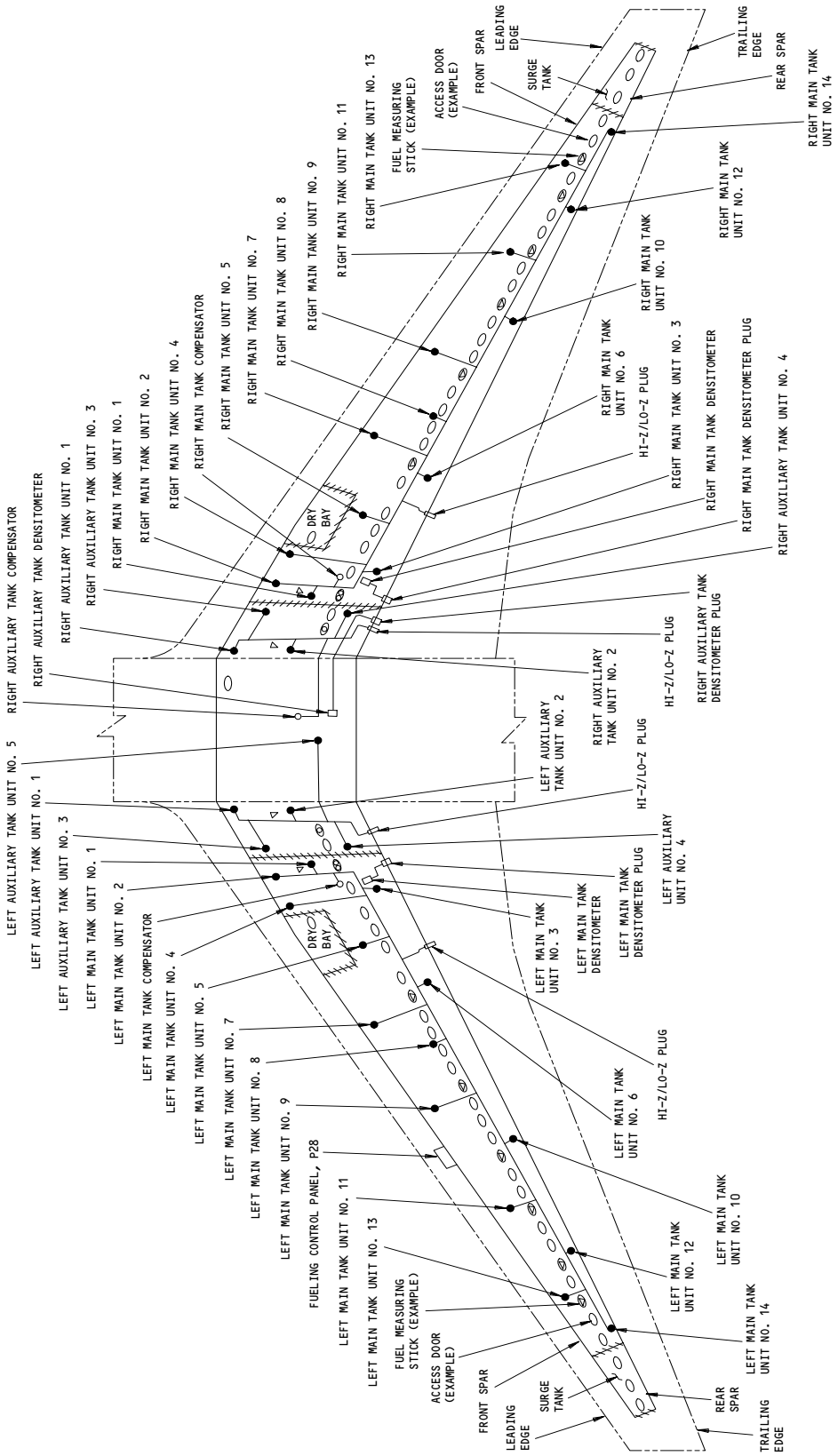

Fuel Quantity Indicating System (FQIS)
Figure 1 (Sheet 1)

BOEING PROPRIETARY - Copyright (C) - Unpublished Work - See title page for details.

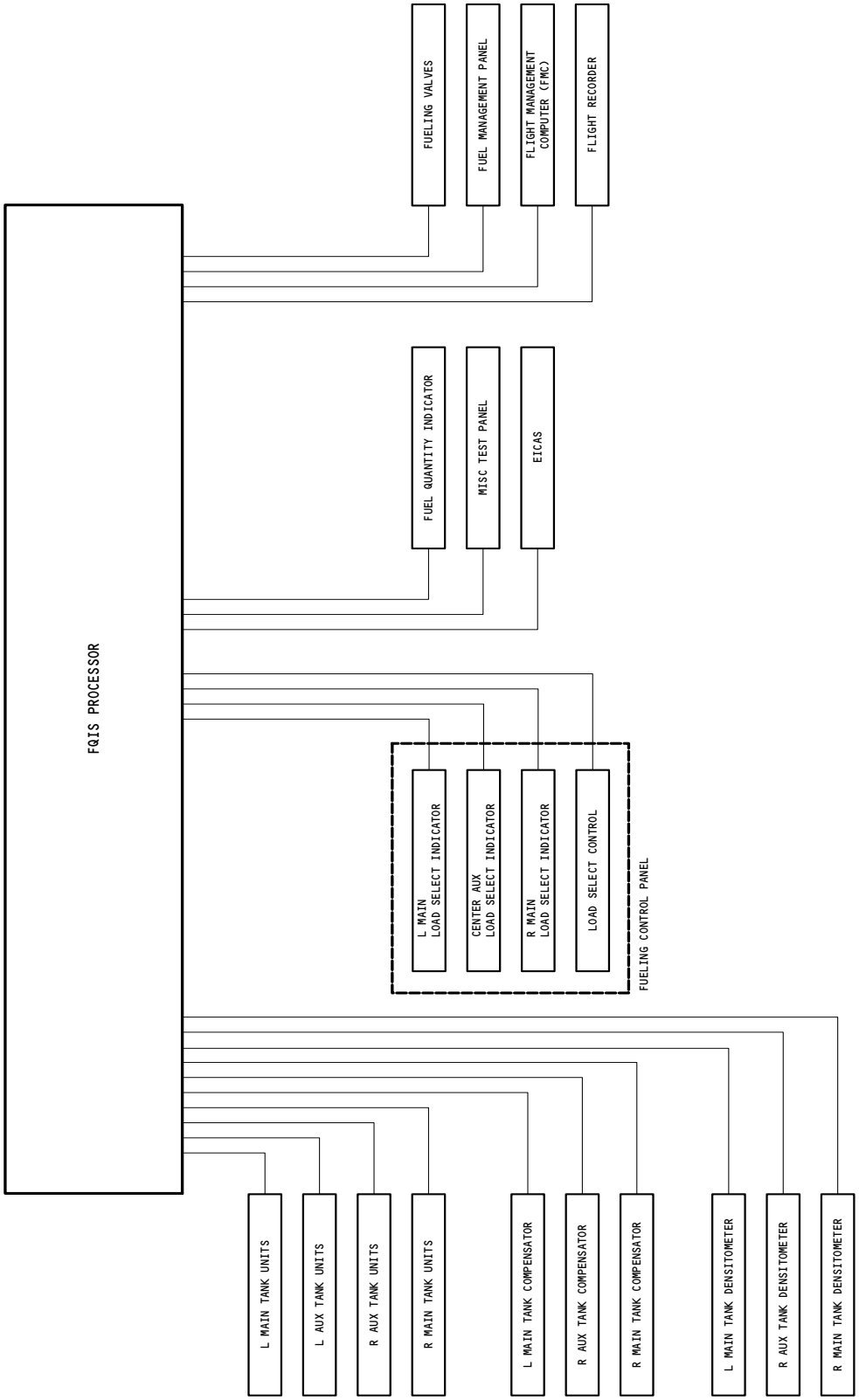

Fuel Quantity Indicating System (FQIS)
Figure 1 (Sheet 2)

A34985

BOEING PROPRIETARY - Copyright (C) - Unpublished Work - See title page for details.

2. Component Details
   A. Tank Units (Fig. 2)
      (1) There are 14 tank units in each main fuel tank, and 9 tank units in the auxiliary fuel tank. All the tank units are the same, except for their length. The length depends on the depth of the tank at that particular location.
      (2) Each tank unit consists of two concentric aluminum tubes, a terminal block, two end caps, and two brackets.
         (a) The aluminum tubes are anodized and polyurethane coated to protect against corrosion. The tubes are factory calibrated. The distance between the tubes is relatively widely spaced to avoid electrical short circuiting, due to water in the fuel or fungus coating on the tubes.
         (b) The tank wiring harness attaches to the tank unit at the terminal block. The wiring terminals on the tank wiring harness and the terminal posts on the terminal block have different dimensions to prevent errors in installation.
         (c) The end caps are insulated to help prevent the tank unit from shorting to the ground. They also supply capacitance fringing control.
         (d) Two brackets made of nonferrous glass-filled nylon, attach each tank unit to the wing structure.
      (3) The tank unit gets input on the fuel level in the fuel tank. It is a linear, capacitance type sensor. Tank characteristics are accounted for by computer software. The concentric aluminum tubes of the tank unit act as plates of a capacitor, and the dielectric is air and/or fuel depending on the quantity of fuel in the fuel tank. This air to fuel ratio gives a capacitance value which is used to calculate the volume of fuel.
   B. Compensator (Fig. 3)
      (1) One compensator is installed in each fuel tank. All compensators are the same. The compensators are almost the same in construction and installation provisions as the tank units.
      (2) Each compensator contains four metallic tubes, or electrodes, which attach to the support tube, a terminal block and two brackets. The four electrodes form a capacitor.
      (3) The compensator senses the dielectric constant of the fuel. It is a capacitance sensing device almost the same as the tank unit. The compensator is installed at the bottom of the fuel tank, completely covered by fuel until the fuel tank is almost empty. As a result, the compensator capacitance is affected only by changes in the dielectric constant of the fuel.
   C. Densitometer (Fig. 4)
      (1) One densitometer is installed in each fuel tank. The densitometer measures the fuel density.

BOEING PROPRIETARY - Copyright (C) - Unpublished Work - See title page for details.

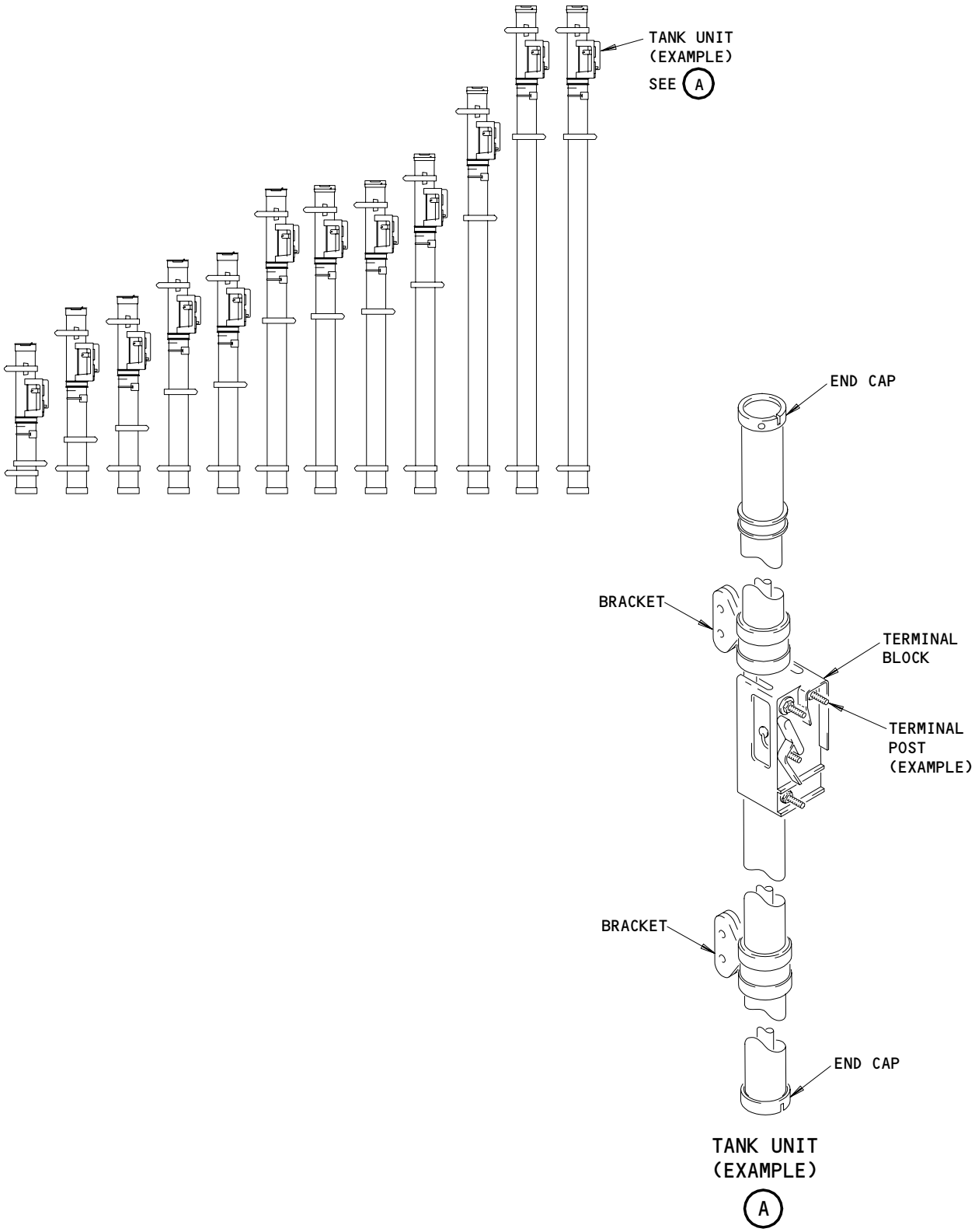

FQIS Tank Units
Figure 2

BOEING PROPRIETARY - Copyright (C) - Unpublished Work - See title page for details.

(2) The densitometer is installed at the bottom of the fuel tank, aft of each compensator. A tank wiring harness attaches to each densitometer. The tank wiring harness for the densitometer goes through the rear spar.

(3) The densitometer contains a nickel alloy, wiring-wrapped, vibrating spool, an excitation coil, a sensing coil, and eight calibration resistors, all installed in a cylindrical, vented housing. The vents in the housing let fuel go into the housing to cover the spool and let air escape.

(4) The FQIS processor sends an AC signal through a coil to excite the spool, which then vibrates. The FQIS processor reads the frequency of the vibration and changes the frequency of the excitation signal until the spool vibrates at its maximum frequency. The maximum "resonant" frequency is a function of the fuel density only. The FQIS processor calculates the fuel density from the resonant frequency.

(5) The densitometer also gives a check on the specific gravity data from the compensator. This increases the accuracy of the FQIS.

D. Fuel Quantity Indicator (Fig. 5)

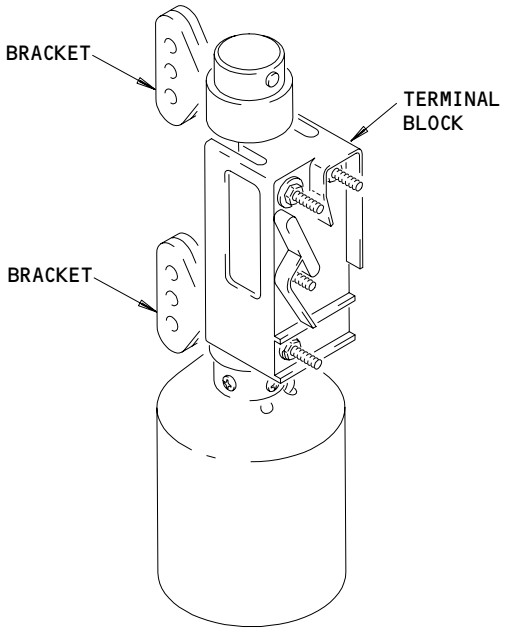

COMPENSATOR
(EXAMPLE)

FQIS Compensator
Figure 3

BOEING PROPRIETARY - Copyright (C) - Unpublished Work - See title page for details.

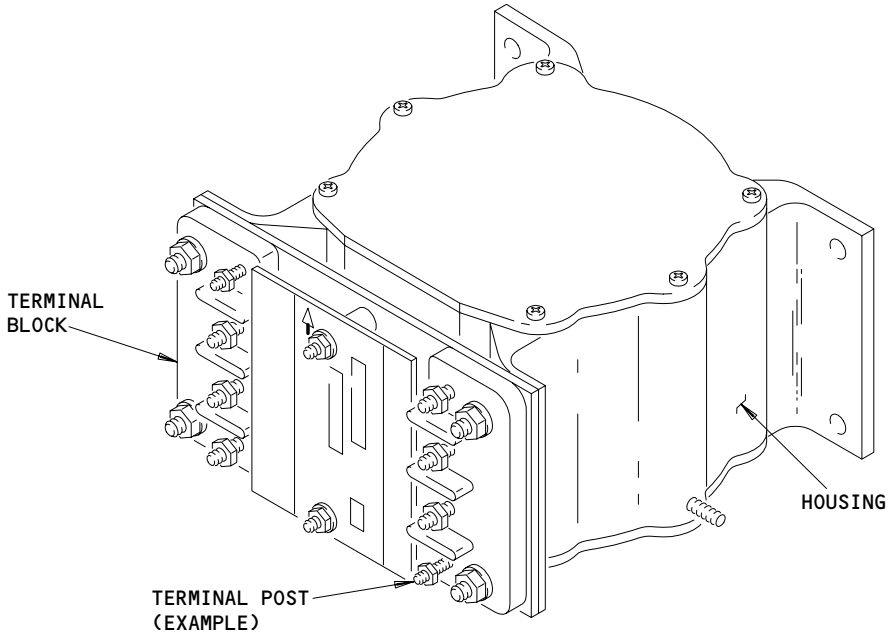

DENSITOMETER
(EXAMPLE)

FQIS Densitometer
Figure 4

BOEING PROPRIETARY - Copyright (C) - Unpublished Work - See title page for details.

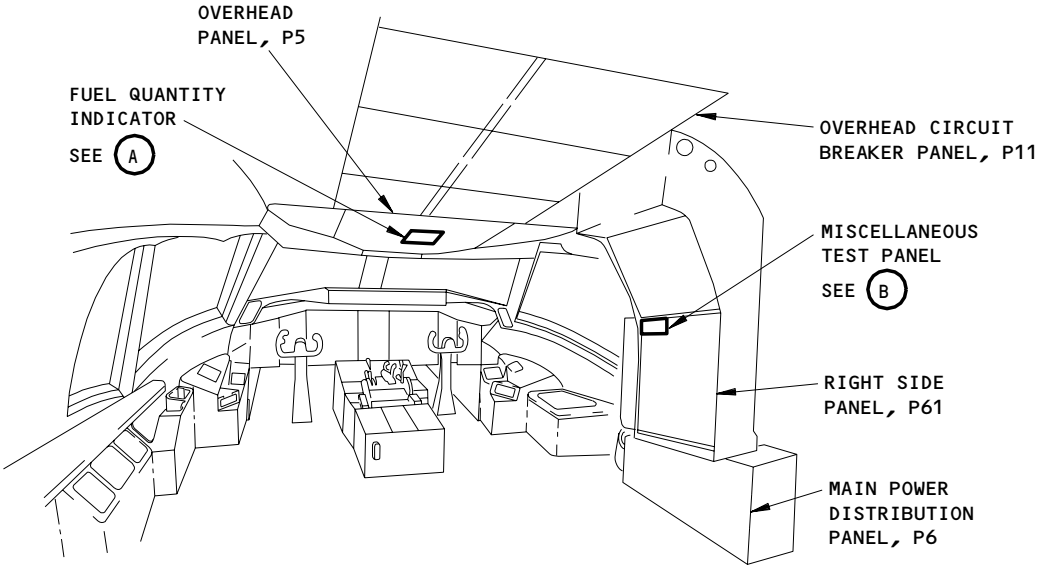

FLIGHT COMPARTMENT

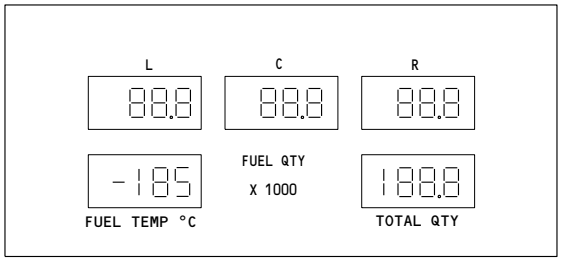

FUEL QUANTITY INDICATOR

A

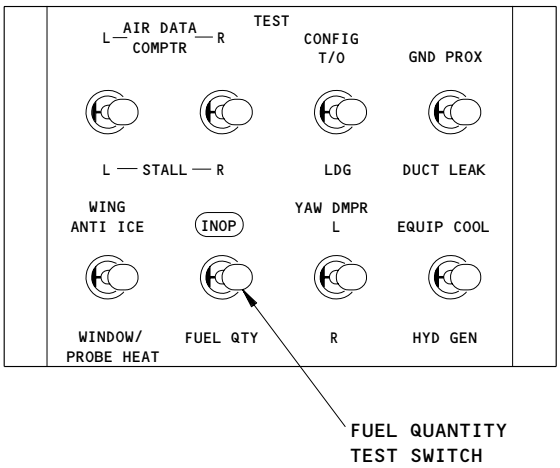

MISCELLANEOUS TEST PANEL
(EXAMPLE)

B

Fuel Quantity Indicator
Figure 5

BOEING PROPRIETARY - Copyright (C) - Unpublished Work - See title page for details.

(1) A fuel quantity indicator is installed on the overhead panel, P5. It supplies digital liquid crystal displays of individual tank, and total fuel quantities; and fuel temperature.
(2) The fuel quantity indicator is contained in an aluminum housing with a front panel which has high contrast, dual-cell liquid crystal displays (LCD). The fuel quantity indicator's electronic circuits use a "brickwall architecture" to prevent a failure in one display from affecting the operation of the other fuel tank displays.
(3) 28V dc is supplied to the fuel quantity indicator from the FQIS processor. Five volts AC for internal lighting is supplied from the aircraft lighting circuits.

NOTE: There is a BRIGHT(BRT)/DIM switch (S3) on the Flight Deck, Overhead Panel (P5). The BRT/DIM switch supplies "Bright" override for the panel light of the Fuel Quantity Indicator, when the "IND LTS" is put in the "Bright" mode. The BRT/DIM switch will improve the lighting of the fuel quantity indicator in daylight.

(4) To do a test on the fuel quantity indicator, put the FUEL QTY test switch on the P61 panel to the FUEL QTY position and release. After 4 seconds, the TOTAL fuel quantity display should show 188.8. The L, C, and R fuel quantity displays should show 88.8. The fuel temperature display should show -188. After the test is done (15-20 seconds), the displays should show the quantity of usable fuel in the fuel tanks.

E. FUEL QTY Test Switch (Fig. 5)
(1) The FUEL QTY test switch is found on the right side panel, P61 in the flight compartment.
(2) When you put the FUEL QTY test switch in the FUEL QTY position and release:
(a) The left, center, and right fuel quantity indicators on the overhead panel, P5 will show 88.8.
(b) The total fuel quantity indicator on the P5 panel will show 188.8.
(c) The fuel temperature indicator on the P5 panel will show -188.
(d) The FUEL CONFIG light on the P5 panel will come on.
(e) The EICAS caution message, LOW FUEL, will show on the top display.
(f) The EICAS status message, FUEL QTY IND, will show on the bottom display.
(g) The EICAS status message, FUEL QTY CHANNEL, will show on the bottom display.

BOEING PROPRIETARY - Copyright (C) - Unpublished Work - See title page for details.

(h) The EICAS maintenance message, FUEL QTY BITE, will show on the bottom display.

NOTE: In order to view the EICAS maintenance message FUEL QTY BITE, you must put the FUEL QTY test switch in the FUEL QTY position and release. Then you must immediately push and release the ECS MSG switch on the right side panel, P61.

(3) The FUEL QTY test switch also does a test of the two ARINC buses A and B. The fuel quantity indicator gets the fuel quantity information from one of the two ARINC buses A and B. If one or two of the ARINC busses is inactive, "-A.-", "-b.-" or "-A.b" will show on the displays of the fuel quantity indicators before the displays show the quantity of usable fuel in the fuel tanks if only one bus is bad. If both busses are bad "-A.b" will show and then the indicators will blank.

(4) If before you use the FUEL QTY test switch, a fault causes the fuel quantity indicator to go off, then the fuel quantity indicator may give a false reading until the test is done. If the fault still exists after the test, then the fuel quantity indicator will go off again.

(5) Once the FUEL QTY test switch is used, if you use the the FUEL QTY test switch again , before the test is complete, nothing will occur.

F. Load Select Indicator (Fig. 6)

(1) One load select indicator, found on the fueling control panel, P28, monitors each fuel tank (three total).

(2) There are two light-on-dark LCD's for each load select indicator. The top display shows the fuel quantity in each fuel tank in LBS (KGS) x 1000. The bottom display shows the fuel quantity selected to be put into the fuel tank in LBS (KGS) x 1000. A 7-1/2 watt, automatically controlled heater makes sure the LCD's operate in cold weather. Power is applied to the load select indicators when the fueling station door is opened.

(3) To test the load select indicators, push the TEST IND switch on the fueling control panel, P28. The top and bottom displays should show 88.8.

(a) The TEST IND switch also does a test of the two ARINC buses A and B. The fuel quantity indicator gets the fuel quantity information from one of the two ARINC busses A and B. If one or two of the ARINC busses is inactive, "-A.-", "-b.-" or "-A.b" will show on the displays of the fuel quantity indicators before the displays show the quantity of usable fuel in the fuel tanks if only one bus is bad. If both busses are bad "-A.b" will show and then the indicators will blank.

BOEING PROPRIETARY - Copyright (C) - Unpublished Work - See title page for details.

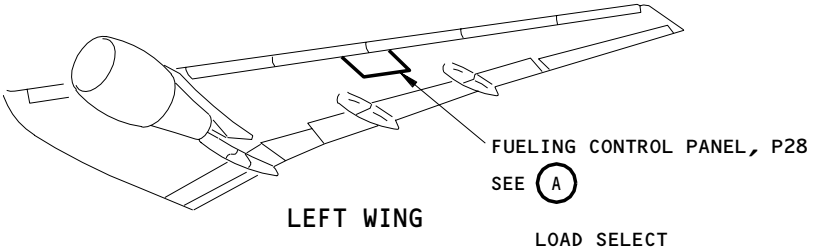

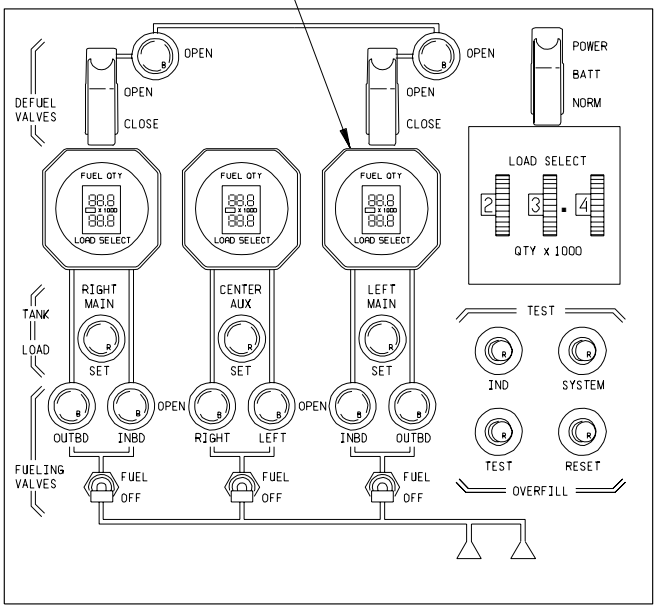

FUELING CONTROL PANEL, P28

A

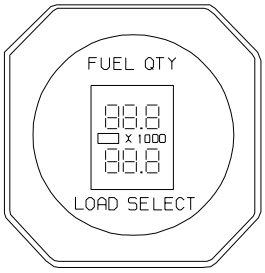

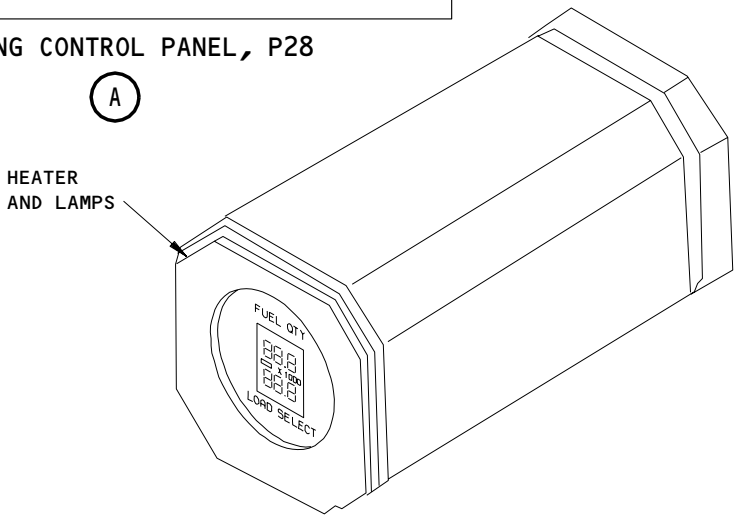

LOAD SELECT INDICATOR

B

Load Select Indicator
Figure 6

BOEING PROPRIETARY - Copyright (C) - Unpublished Work - See title page for details.

(4) If during the fueling operation there is a FQIS failure, the fuel quantity indicator will show the message "PUSH SEt" and the fuel shutoff valve will close. To continue fueling, you must push the set button and fuel manually, or you must correct the failure by doing the Fuel Quantity Bite "SELF TEST?" and corrective action (FIM 28-41-00/101).

G. Load Select Control (Fig. 7)

(1) The load select control is found on the fueling control panel, P28.

(2) The load select control consists of an explosion proof case with a flame arrestor type breathing plug. The case houses three thumbwheel type switches, three resistor boards, and an electrical connector.

(3) The load select control lets the fueling crew select the quantity of fuel to be put into each fuel tank. To do this you set the thumbwheel switches then push the SET switch for the applicable fuel tank. The load select control then sends an analog signal to the FQIS processor representive of the fuel to be loaded.

H. FQIS Processor (Fig. 8)

(1) The FQIS processor is the principle component of the fuel quantity indicating system. The FQIS processor calculates fuel quantity and sends the data for display in the flight compartment and at the fueling control panel. The FQIS processor also controls the pressure fueling operations and does BITE functions.

(2) The FQIS processor is found in the main equipment center on the E2-4 rack. There are connectors on the front face of the FQIS processor for the ARINC channels A, B and C. The connectors, found at the back of the FQIS processor, connect it with the other components of the FQIS. On the front face of the FQIS processor are a 32 character LED display, a BIT procedure placard, a MENU button, a YES button, a NO button, an ON/OFF button and UP and DOWN arrow buttons.

(3) The FQIS processor needs 28 volts dc power to operate.

(4) The FQIS processor has three separate and independent channels; one for each fuel tank. Each channel has one Individual Fuel Quantity Channel (IFQC) circuit board. In the FQIS processor there are also two Input/Output Channel (IOC) circuit boards and one BITE circuit board.

BOEING PROPRIETARY - Copyright (C) - Unpublished Work - See title page for details.

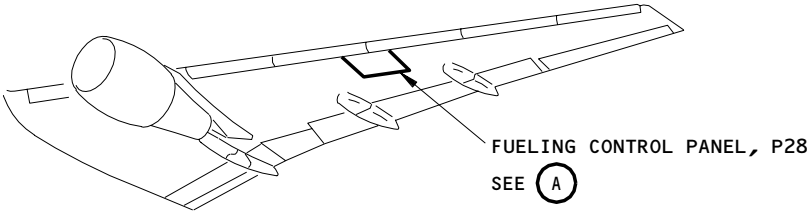

LEFT WING

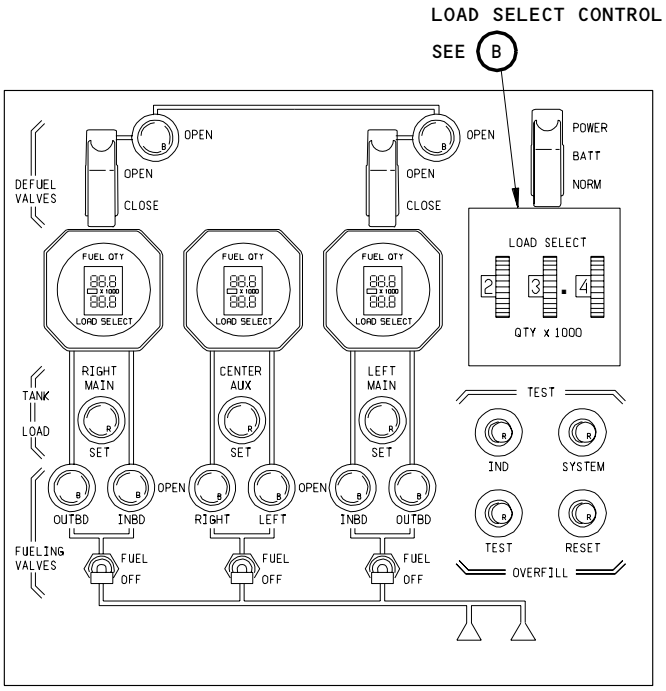

FUELING CONTROL PANEL, P28

A

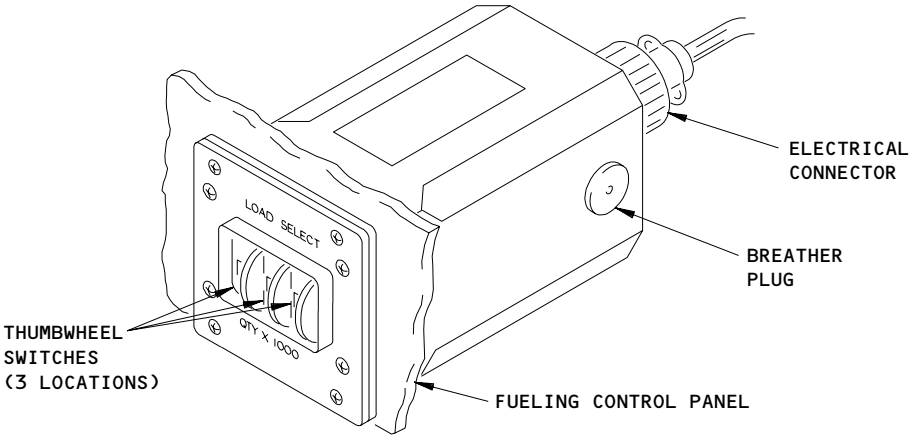

LOAD SELECT CONTROL

B

Load Select Control
Figure 7

BOEING PROPRIETARY - Copyright (C) - Unpublished Work - See title page for details.

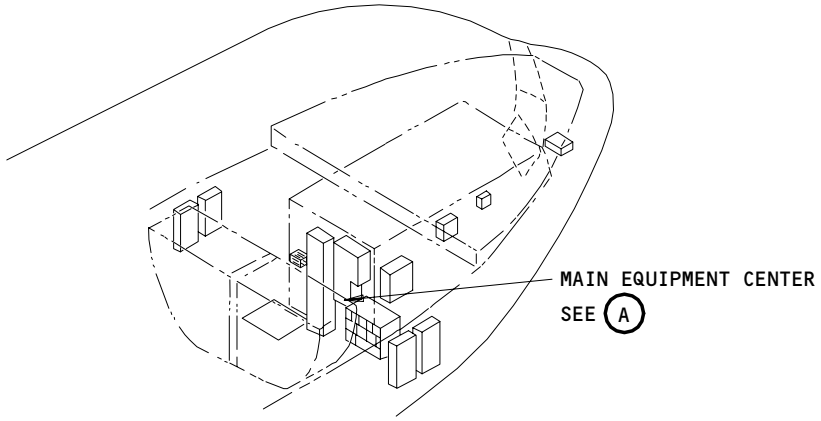

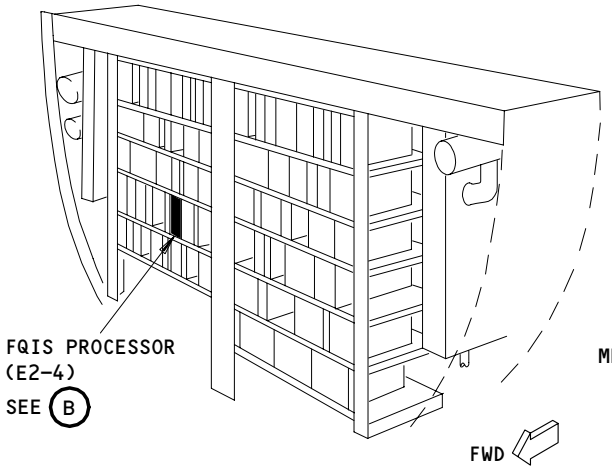

MAIN EQUIPMENT CENTER

A

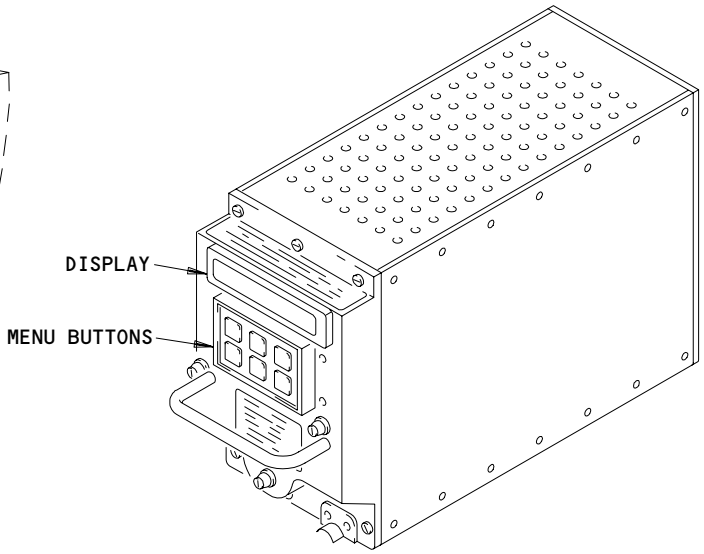

FQIS PROCESSOR

B

FQIS Processor Unit
Figure 8

BOEING PROPRIETARY - Copyright (C) - Unpublished Work - See title page for details.

(5) Two separate and redundant power supplies supply each of the six circuit boards. Only one power supply is necessary for normal operation. The circuit boards are electrically and physically separated. During normal operation all the circuit boards have power.

(a) Each Individual Fuel Quantity Channel (IFQC) circuit board is assigned to one fuel tank. Then, if a component is bad or there is contamination in one fuel tank, it does not affect the other fuel tanks. The IFQC circuit boards supply excitation signals to the tank units, compensators and densitometers. The IFQC circuit boards also measure the return signals and calculate fuel weight and density. The fuel quantity, built-in-test, and other calculated information for each fuel tank is sent through a redundant serial data bus to each Input/Output Channel (IOC) circuit board.

(b) Each of the two Input/Output Channel (IOC) circuit boards adds the fuel quantity data. The IOC circuit boards also send fuel quantity data, through the ARINC busses A and B, to the fuel quantity indicator, load select indicators, EICAS and FMC. The IOC, through the BITE circuit card, sends control signals to close the fueling shutoff valves at Volumetric Top Off (VTO) or at the load select quantity. The IOC circuit cards also supply outputs for low fuel and fuel configuration. They also receive inputs for the fueling station door position, air/ground relay position, system test, indicator tests, load select set data and fuel override pump status.

(c) The Individual Fuel Quantity Channel (IFQC) measures and calculates the fuel weight for each of the tank unit areas in the applicable fuel tank. Each IFQC supplies an excitation (LO-Z) signal which is sent in sequence to each of the tank units and the compensator in the applicable fuel tank. The return (HI-Z) signal is characterized for the shape of each tank unit's area. The fuel density is calculated from the densitometer. The fuel weight is the product of fuel volume and density. Discrete inputs to the IFQC also enable and disable some fueling control panel functions. The air/ground relay supplies different fuel tank shapes on the ground and in the air. The fueling station door signal enables and disables the load select indicator and the load select "SET" functions.

BOEING PROPRIETARY - Copyright (C) - Unpublished Work - See title page for details.

(d) Each of the three IFOC's send signals to the two Input/Output Cards (IOC's). All the tank units weights are added by each IOC and also the total weight for each fuel tank and the total quantity for all the fuel tanks. Each IOC has an ARINC bus (A or B). Fuel quantity data is sent over the ARINC busses to the fuel quantity indicator and the load select indicators. The IOC's also send signals to the BITE card. The IOC's supply excitation to fueling control panel to control the fueling shutoff valves. Discrete outputs for low fuel and fuel configuration are also generated. There are discrete inputs to the IOC's for fueling station door position, air/ground relay position, system test request, indicator test request, load set requests and fuel override pump status.

(e) The BITE circuit card keeps FQIS faults and has an interface with the BITE controls on the front face of the FQIS processor for seeing the faults. The drivers for the fueling shutoff valves are found on the BITE circuit card. The BITE circuit card has ARINC bus C which transmits fuel system information and fuel quantity data from the IOC's to the EICAS for message logic.

(6) The FQIS processor unit receives signals from the tanks units, compensators, densitometers, load select control, and air/ground relay, and performs computations as programmed. Output signals of fuel quantity go to the fuel quantity indicator, and the load select indicators. A signal is also sent to the EICAS computers and FUEL CONFIG light on P5, warning of low fuel, fuel imbalance, or system faults. Fueling valve control signals are available during the fueling operation. The FQIS processor unit also provides failure monitoring, and built-in-test.

(7) The six buttons on the front face of the FQIS processor operate as follows:

(a) ON/OFF button - puts the BITE display control on or off.

(b) MENU button - puts you at the menu level and puts on different menus.

(c) YES button - puts on the menu item shown on the display.

(d) NO button - puts on the next menu item on the display.

(e) The UP arrow button - shows the last menu item shown.

(f) The DOWN arrow button - shows the next menu item.

I. Tank Wiring Harness (Fig. 9 and 10)

(1) The location of the tank wiring harnesses are shown in Fig. 9 sheet 1 and 2.

(2) A simplified schematic for the LO-Z and HI-Z wiring for the left main fuel tank is shown in Fig. 10.

(3) The HI-Z/LO-Z connector or densitometer connector is shown in Fig. 9 (Sheet 7).

(4) The term LO-Z means low impedance.

BOEING PROPRIETARY - Copyright (C) - Unpublished Work - See title page for details.

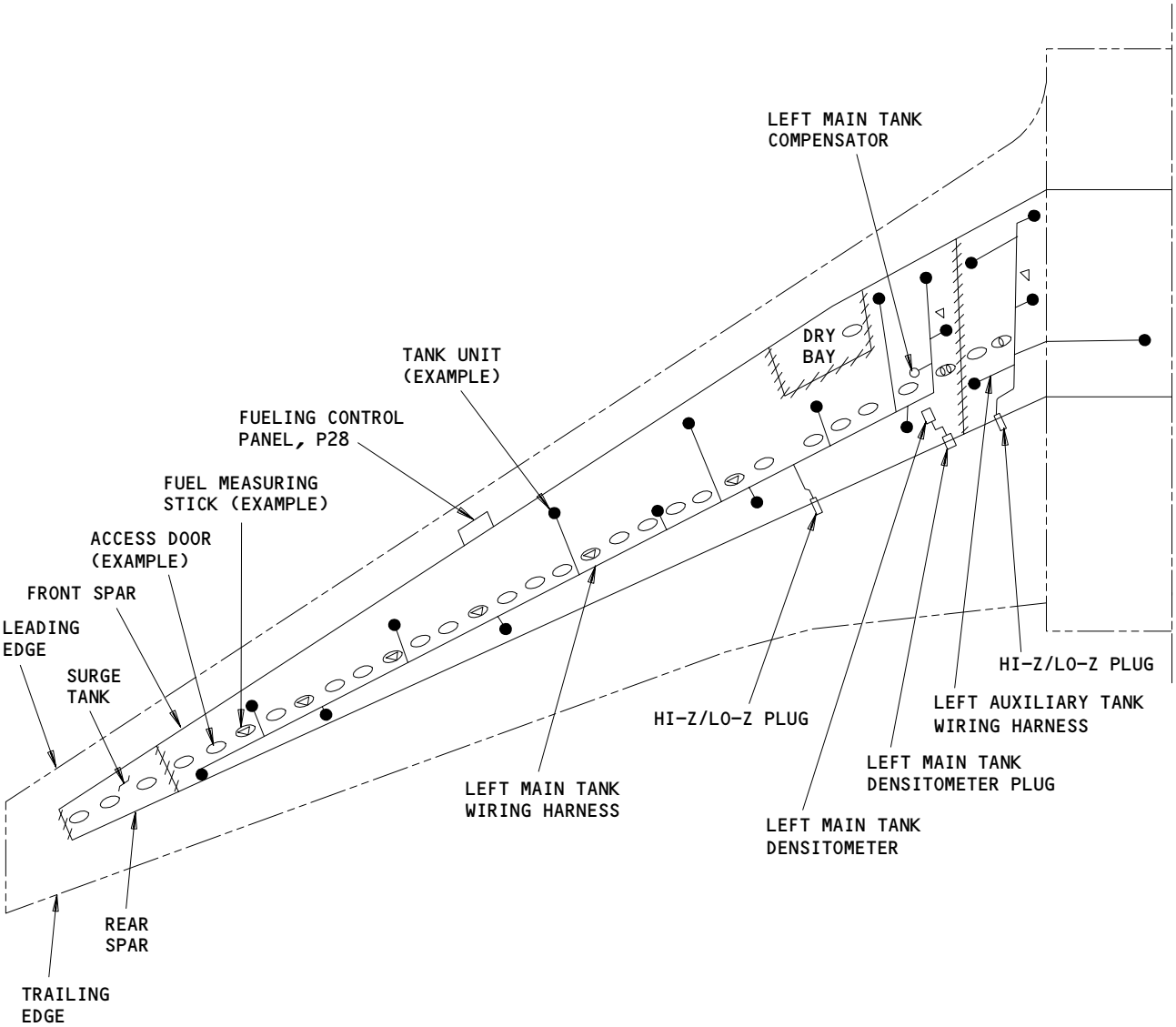

LEFT WING - TANK WIRING HARNESSES

Fuel Quantity Indicating System Wiring
Figure 9 (Sheet 1)

BOEING PROPRIETARY - Copyright (C) - Unpublished Work - See title page for details.

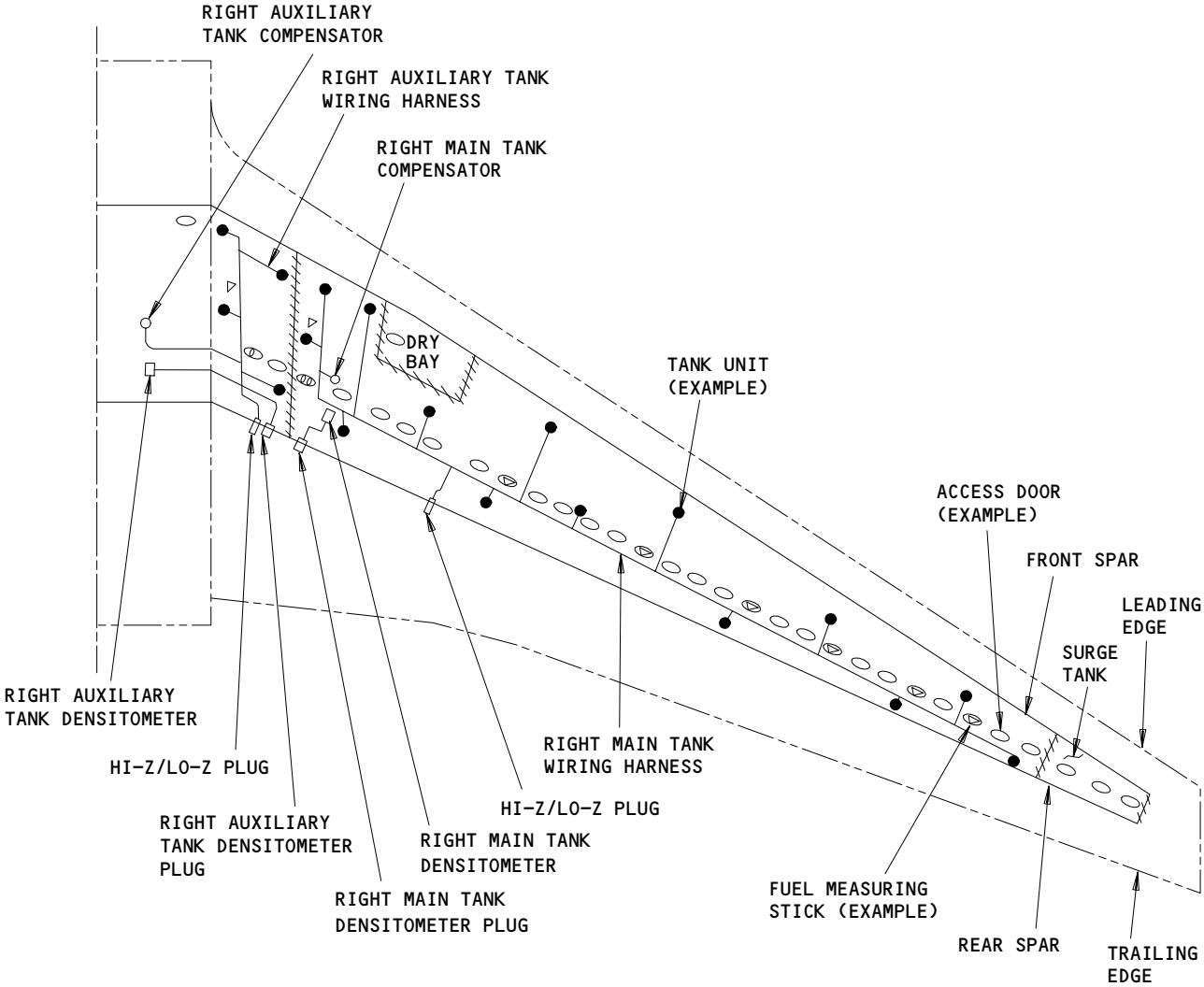

RIGHT WING - TANK WIRING HARNESSES

Fuel Quantity Indicating System Wiring
Figure 9 (Sheet 2)

BOEING PROPRIETARY - Copyright (C) - Unpublished Work - See title page for details.

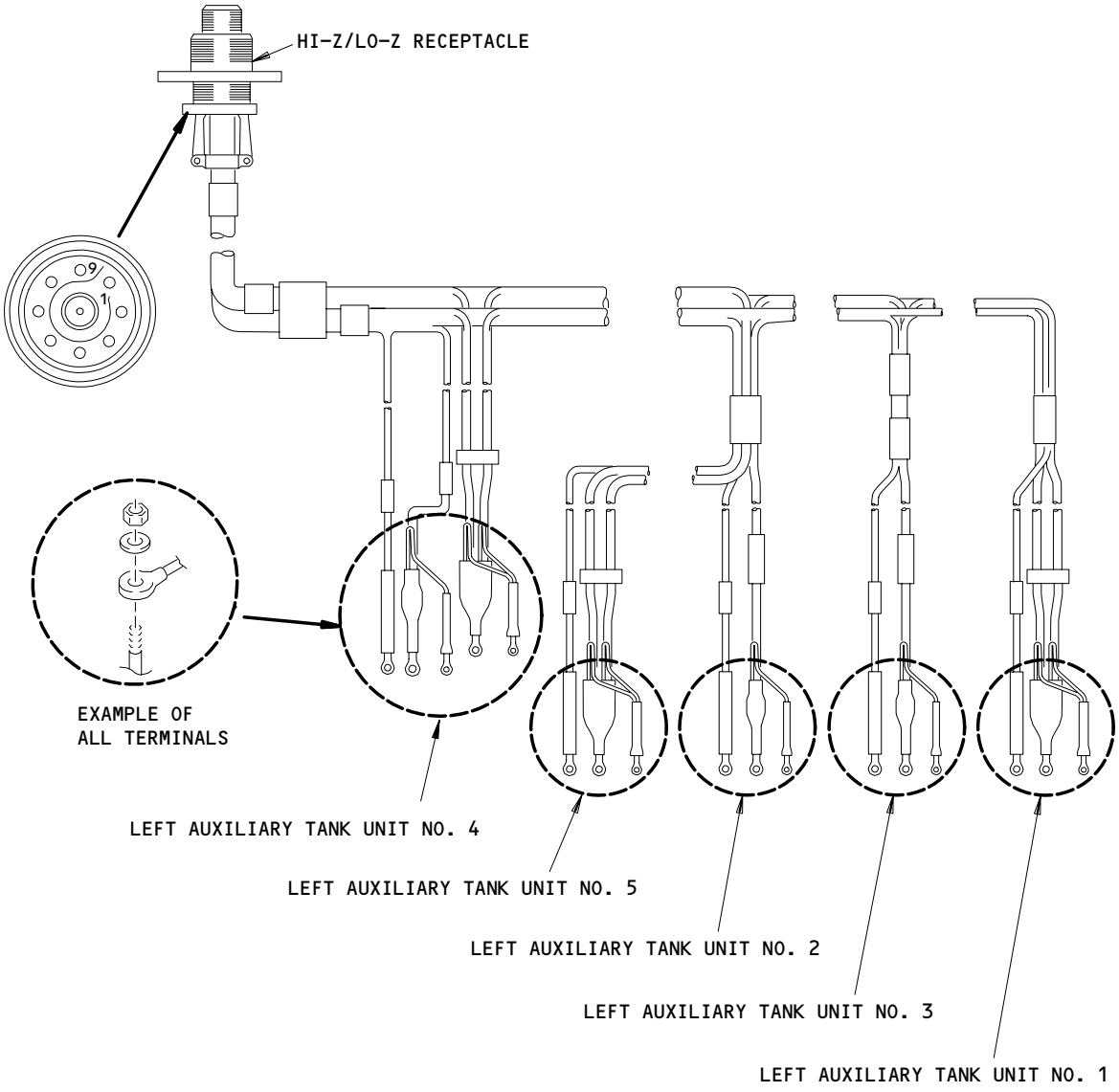

LEFT AUXILIARY TANK WIRING HARNESS

Fuel Quantity Indicating System Wiring
Figure 9 (Sheet 3)

BOEING PROPRIETARY - Copyright (C) - Unpublished Work - See title page for details.

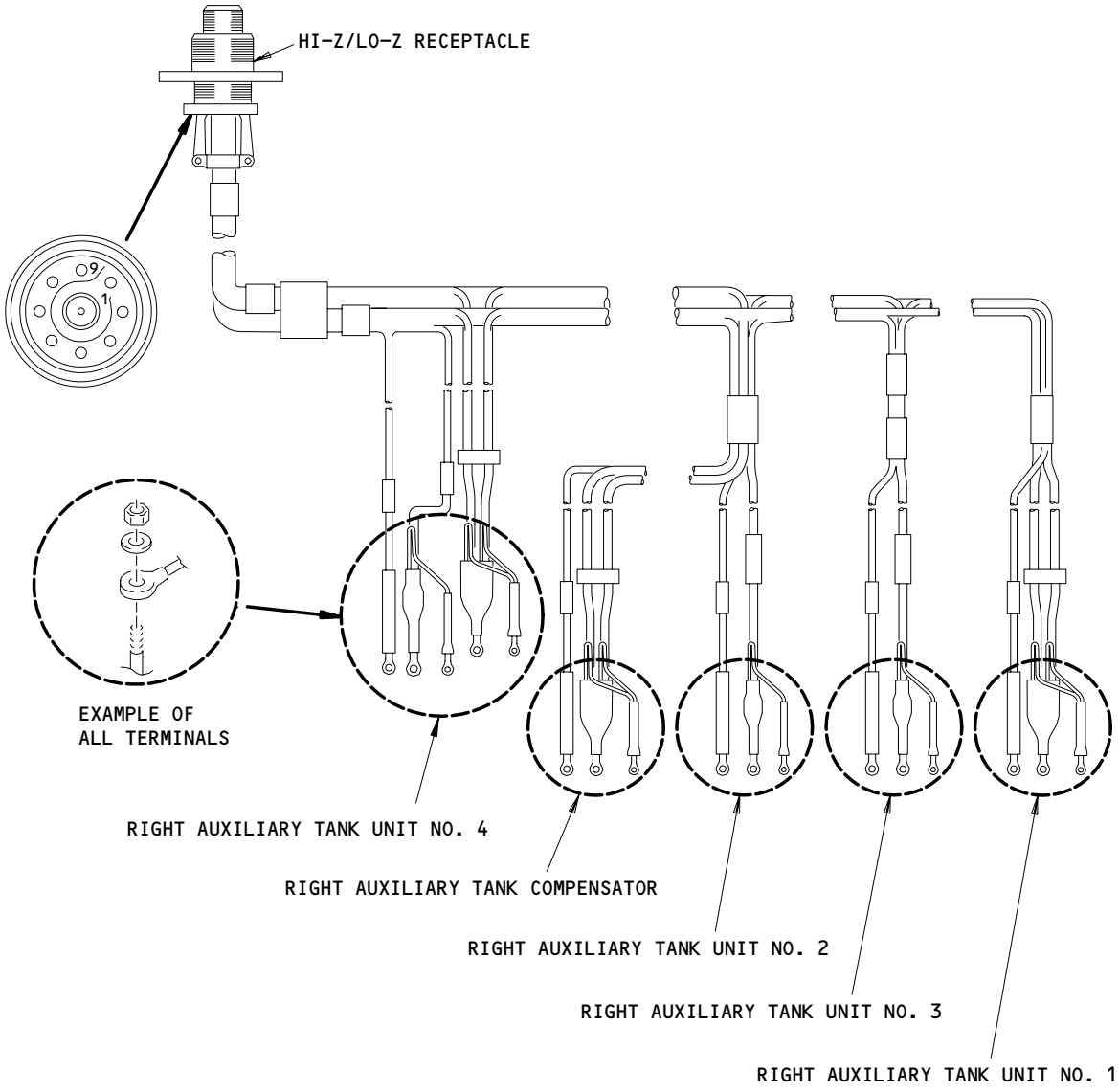

RIGHT AUXILIARY TANK WIRING HARNESS

Fuel Quantity Indicating System Wiring
Figure 9 (Sheet 4)

BOEING PROPRIETARY - Copyright (C) - Unpublished Work - See title page for details.

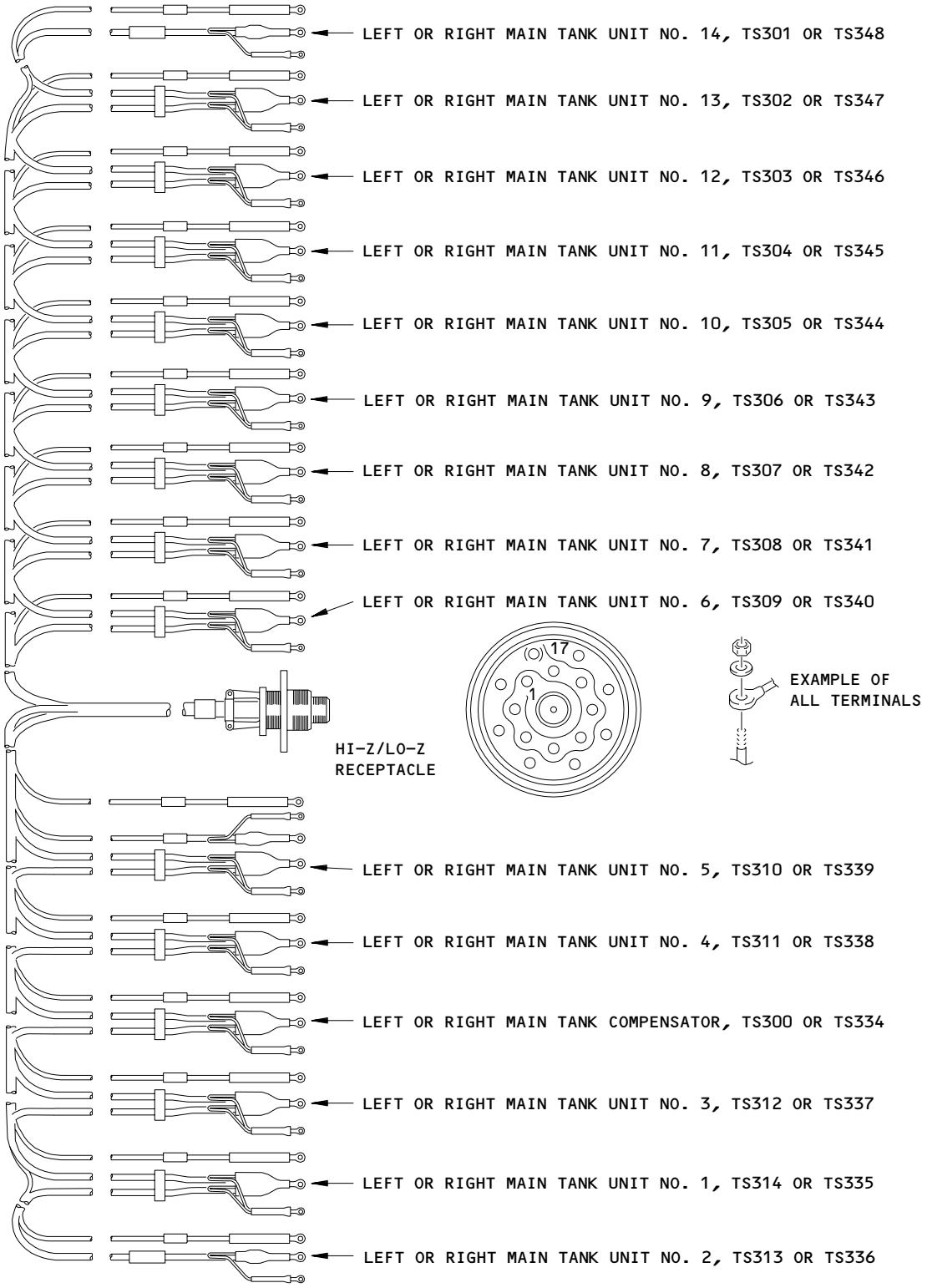

LEFT OR RIGHT MAIN TANK WIRING HARNESS

Fuel Quantity Indicating System Wiring
Figure 9 (Sheet 5)

BOEING PROPRIETARY - Copyright (C) - Unpublished Work - See title page for details.

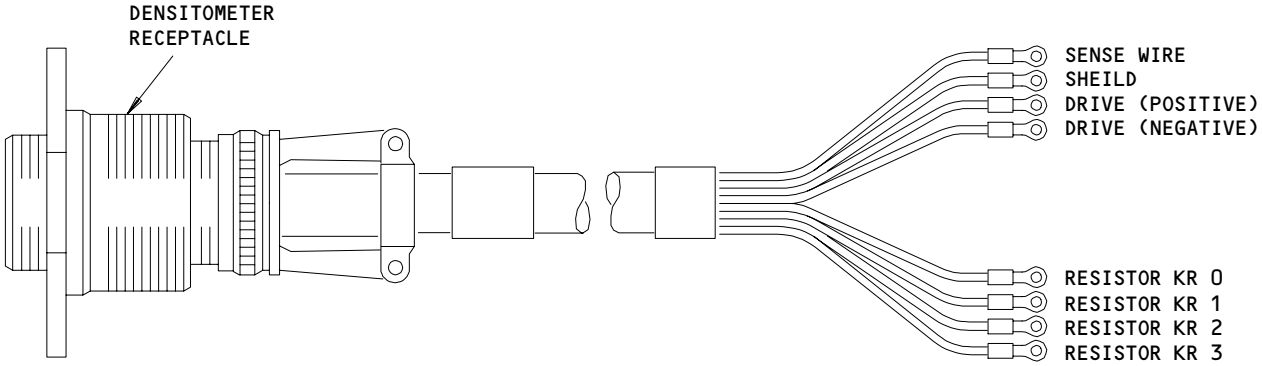

TANK WIRING HARNESS FOR THE DENSITOMETER
IN THE LEFT OR RIGHT MAIN OR AUXILIARY FUEL TANK

Fuel Quantity Indicating System Wiring
Figure 9 (Sheet 6)

BOEING PROPRIETARY - Copyright (C) - Unpublished Work - See title page for details.

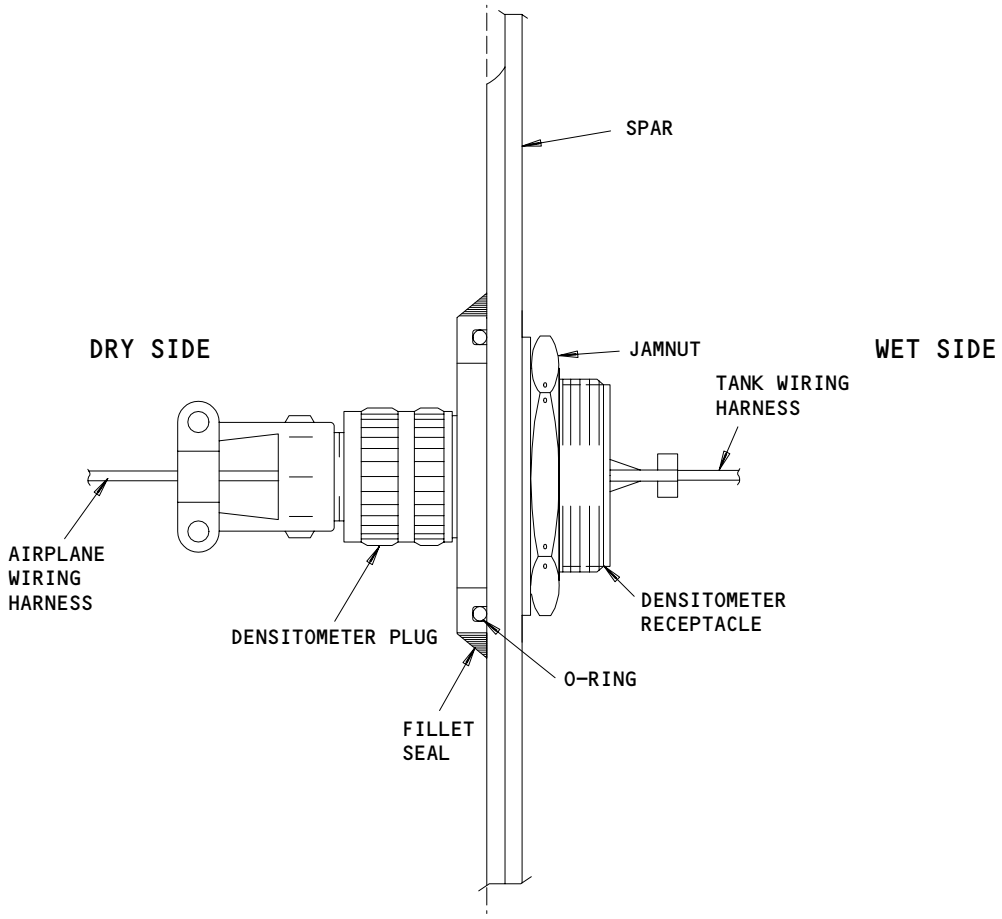

DENSITOMETER CONNECTOR

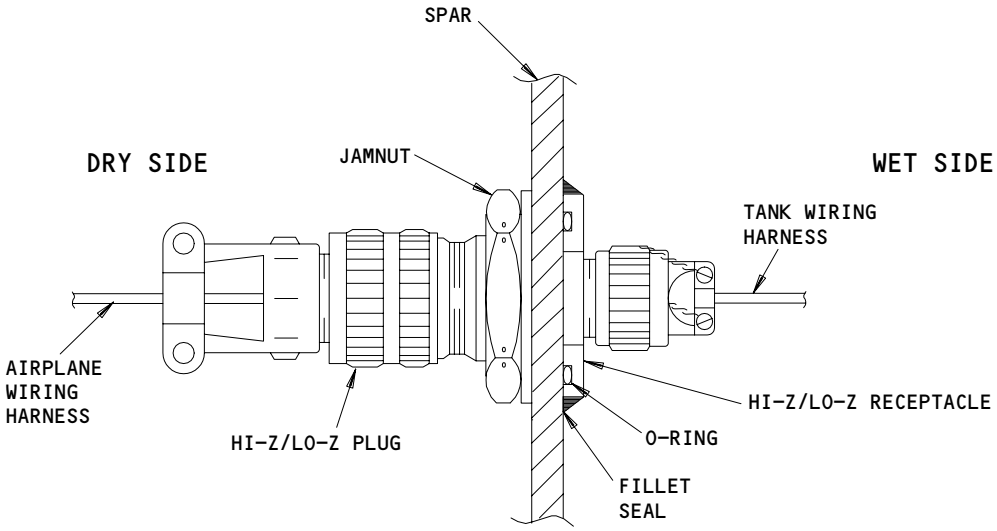

HI-Z/LO-Z CONNECTOR

Fuel Quantity Indicating System Wiring
Figure 9 (Sheet 7)

BOEING PROPRIETARY - Copyright (C) - Unpublished Work - See title page for details.

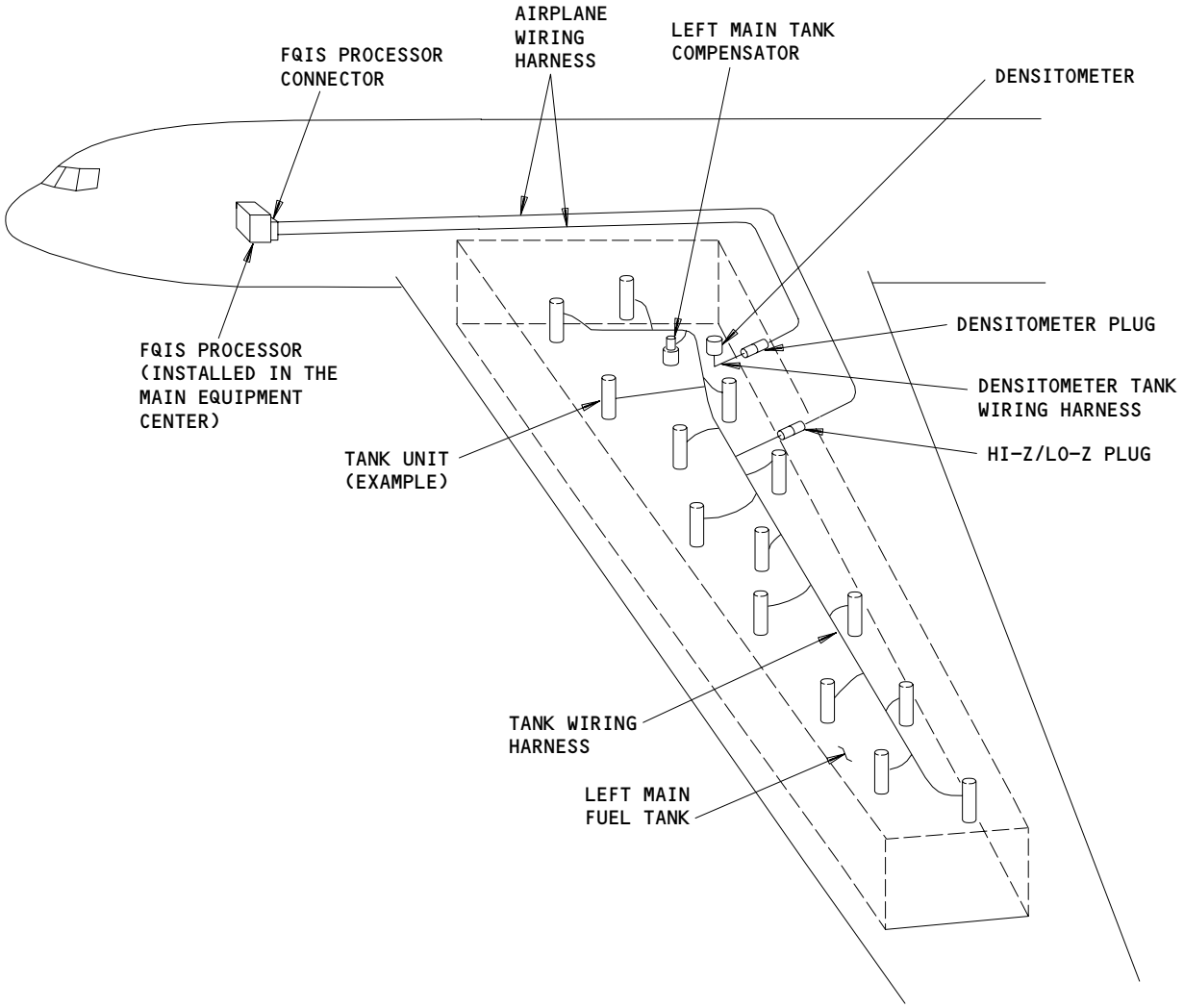

AIRPLANE WIRING HARNESS AND TANK WIRING HARNESS FOR THE LEFT MAIN TANK

Fuel Quantity Indicating System Wiring
Figure 9 (Sheet 8)

BOEING PROPRIETARY - Copyright (C) - Unpublished Work - See title page for details.

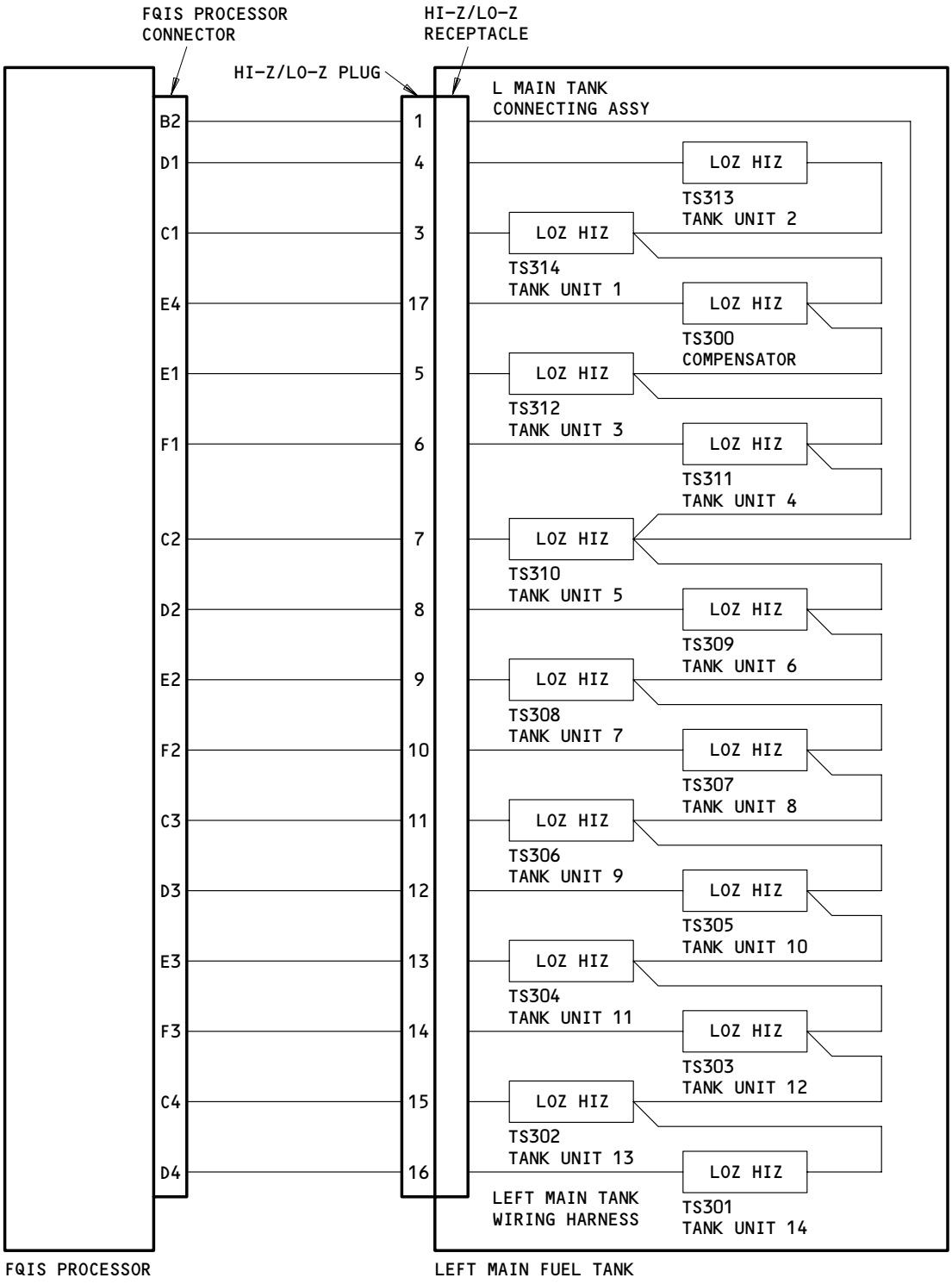

LO-Z AND HI-Z WIRING FOR THE LEFT MAIN TANK (SIMPLIFIED SCHEMATIC)
Fuel Quantity Indicating System Wiring
Figure 9 (Sheet 9)

BOEING PROPRIETARY - Copyright (C) - Unpublished Work - See title page for details.

(5) The term HI-Z means high impedance.
(6) The airplane wiring harness is found external to the fuel tank. The airplane wiring harness begins at the FQIS processor connector and ends at the HI-Z/LO-Z plug or densitometer plug. The HI-Z/LO-Z plugs are found on the dry side of the rear spar of the fuel tank. The densitometer plugs are found on the dry side of the rear spar.
(7) The tank wiring harness is found internal to the fuel tank. The tank wiring harness begins at the HI-Z/LO-Z receptacle or densitometer receptacle and ends at the wiring terminals on the tank units and compensator or densitometer.
(8) The HI-Z/LO-Z plug connects with the HI-Z/LO-Z receptacle of the tank wiring harness.
(9) The densitometer plug connects with the densitometer receptacle of the tank wiring harness.
(10) The tank wiring harnesses are installed in their applicable fuel tanks.
(11) For the tank wiring harnesses for the tank units and compensator:
(a) The FQIS processor sends an excitation signal to the tank units and compensators through the LO-Z wiring.
(b) The HI-Z wiring carries the return signal from the tank units and compensators to the FQIS processor.
(c) The LO-Z wiring is individually routed from the FQIS processor to the tank units and compensators.
(d) The HI-Z wiring is connected in series between the tank units and compensator to the HI-Z/LO-Z connector. One HI-Z wire which goes to the FQIS processor.
(12) The tank wiring harness does not require and is not authorized for any on-line or field calibration.
(13) The end terminals of the tank wiring harness at the tank units, compensators or densitometers can be repaired by replacement of the end terminals. All other damage to the tank wiring harness will result in replacement of the harness.
(14) Any corrosion or damage to the airplane wiring harness or the tank wiring harness can result in unknown accuracy fault for the applicable fuel tank. This can cause the fuel quantity indicator displays for the applicable tank and total to go off.
(15) The tank wiring harnesses must be carefully installed and secured. An improperly installed, loose, or damaged tank wiring harness can introduce stray capacitance which would affect system accuracy.
(16) Improper installation of a tank wiring harness can result in nuisance fault codes and nuisance status codes. For instance, a poorly secured connection of the tank wiring harness to the LO-Z, HI-Z shield, and HI-Z terminals of a tank unit or compensator can result in nuisance fault codes and nuisance status codes.

3. Operation (Fig. 10)
A. Functional Description
(1) FQIS Processor Operation
(a) The FQIS processor operates whenever the system has power. No flight crew operator actions are necessary for the FQIS processor to calculate and show fuel quantity.

BOEING PROPRIETARY - Copyright (C) - Unpublished Work - See title page for details.

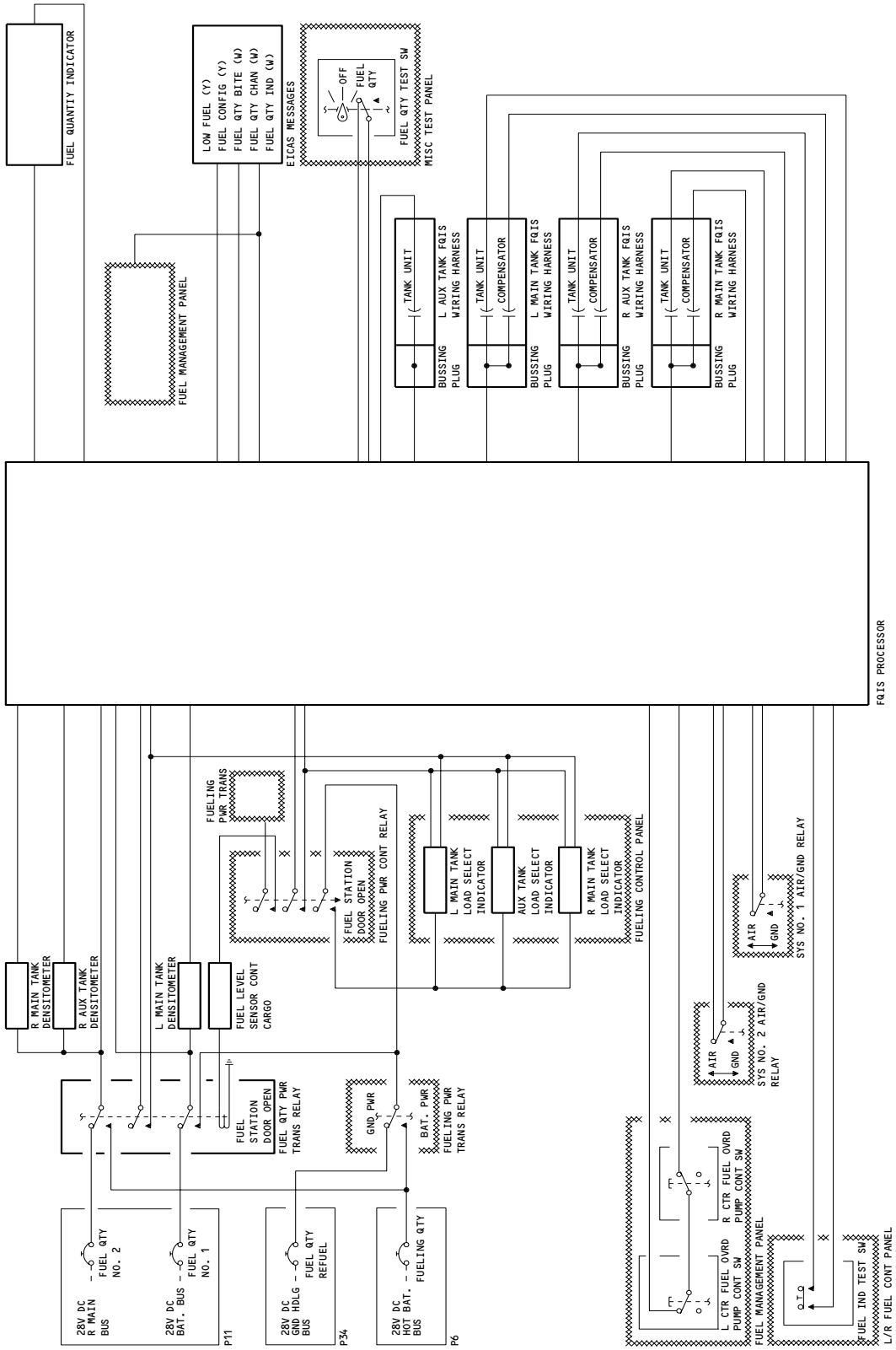

Fuel Quantity Indicating System (FQIS) Schematic
Figure 10

A35082

BOEING PROPRIETARY - Copyright (C) - Unpublished Work - See title page for details.

(b) Power requirements for the FQIS processor, 28 volt dc, normally comes from the battery bus, and the right main bus. Alternate power sources for the FQIS processor come from the ground handling bus and the hot battery bus.

(c) The battery bus normally supplies power to power supply 1 in the FQIS processor unit, and the right main bus supplies power to power supply 2.

(d) The FQIS processor will operate even with only one power source available.

(2) Tank Unit Signals and Programming

(a) Strategically located tank units measure the fuel quantity in each fuel tank. Each fuel tank also contains a compensator, which gets input on the dielectric of the fuel. Both the tank units and the compensator are used to calculate the fuel quantity.

(b) With power applied to the FQIS processor unit, an excitation signal is sent to the tank units to measure their capacitance value. This is accomplished by comparing the tank unit against a rebalance capacitor of known value, which increments or de-increments until a balance is reached. This operation is carried out for each tank unit, and a computation of tank volume made by the microcomputer as follows:

1) The computer program divides each tank unit into equal sections, and assigns a value proportional to tank shape. Wetted sections of the tank units are summed, and the value of unusable fuel kept in the computer memory is subtracted from the total. Fuel quantity indicators show the quantity of usable fuel.

2) The values assigned tank unit sections change with airplane attitude. The computer program contains four different characterizations for the ground conditions and four for the air condition.

(c) The high frequency signal used for fuel measurement avoids interaction with other airplane systems. The signal also tolerates low insulation resistance, and is not sensitive to fuel contamination.

(3) EICAS Messages

(a) The FQIS processor sends signals of low fuel, fuel configuration, and system faults to EICAS.

1) EICAS caution message LOW FUEL and the FUEL CONFIG light will come on during this condition:

a) When the quantity of fuel in one of the two main fuel tanks is less than 2200 lbs (1000 kgs).

2) EICAS advisory message FUEL CONFIG and the FUEL CONFIG light on the P5 panel will come on during one of these conditions:

a) A fuel imbalance of 1500-2500 lbs (680-1134 kgs) between the left and right fuel tanks depending upon total main fuel tanks quantity.

BOEING PROPRIETARY - Copyright (C) - Unpublished Work - See title page for details.

b) The two auxiliary tank override switches in the off position with over 1200 lbs (500 kgs) of fuel remaining in the auxiliary fuel tank. The message and light are reset when the fuel remaining in the auxiliary fuel tank drops below 1000 lbs (400 kgs).

(b) The FQIS processor sends a maintenance required signal to EICAS when the FQIS processor finds a fault.

1) These messages are shown:

a) FUEL QTY BITE (maintenance message) - Shown when one or more faults are recorded in the FQIS processor NVM (nonvolatile memory). To show this message you must push the ECS MSG switch on the EICAS MAINT module (P61 panel).

b) FUEL QTY CHANNEL (status message) - Automatically shown when the ARINC bus A or B becomes inactive. Only one of the two ARINC busses is necessary for FQIS operation. If the ARINC bus A becomes inactive, the last received value is shown for approximately displayed when the FQIS processor has a fault in either channel with valid digital data. This message is inhibited by the FUEL QTY BITE status message.

c) FUEL QTY IND (status message) - Automatically displayed when there is unknown accuracy in one or two fuel tank quantity indicators with valid digital data. This message is inhibited by the FUEL QTY BITE status message.

d) FUEL QTY BITE (status message) - Automatically shown when there is unknown accuracy in one or more fuel tanks and there is a FQIS fault.

(4) Densitometer Signals

(a) All three densitometers operate continuously. Each densitometer outputs two pulse signal trains to the FQIS processor unit for processing. Should one densitometer malfunction the FQIS processor unit uses data from one of the other two densitometers.

(b) At the FQIS processor unit, the microcomputer counts the pulses, and calculates the density of the fuel. Fuel density is proportional to the natural logarithmic value of the ratio of the two pulse outputs.

(5) Indicator Signals

(a) The FQIS processor calculates the weight of fuel in each fuel tank. The FQIS processor also calculates the total fuel quantity, by adding the quantity of fuel in each fuel tank.

(b) The quantity of fuel is shown digitally on the fuel quantity indicator found on the overhead panel, P5. The fuel quantity indicator has individual displays for each fuel tank and for the total fuel quantity. The fuel quantity indicator also shows the fuel temperature (Ref 28-43-00).

BOEING PROPRIETARY - Copyright (C) - Unpublished Work - See title page for details.

(c) If the FQIS processor determines that there is unknown accuracy in a fuel quantity indicator, the individual indicator in the flight compartment and on the fueling control panel, P28, will go off. The total fuel quantity indicator on the P5 panel and on the flight management computer will also go off.

(d) With the fueling station door open, the top half of the individual load select indicators show the quantity of fuel in their applicable fuel tanks.

(6) FQIS Fueling Control

(a) With power supplied to the FQIS and the load select control set to the quantity of fuel that is necessary, an analog signal proportional to that quantity, is sent to the FQIS processor. The FQIS processor digitizes the signal and stores it in memory. The FQIS processor also sends a digital signal of the same value to the load select indicator, to be shown on the bottom display. As the airplane is fueled, the fuel quantity is shown on the top display. When the selected quantity of fuel shown on the bottom display is reached, the fueling shutoff valves close.

(7) FQIS Fault Recovery

(a) To read the faults kept in the FQIS processor you use the 32-character LED display and six buttons on the front face of past faults. The data shown in the FQIS processor shows present and always current. For past faults an intermittent fault is shown with the number of times the fault occured on a specific flight leg (maximum of 99) and if the fault occurred on the ground or in the air. When you read the present faults only Air or Ground indication for when the fault occurred is provided. When you read the faults from the memory, only the flight leg numbers for which faults were recorded appear. When you erase the fault history, only the flight legs 11 thru 64 are erased.

NOTE: In the Fault History menu, flight leg 0 is the flight leg you are currently on. The flight leg starts at airplane takeoff. When you read the fault messages in flight leg 0 make a written record of the fault messages that you can refer to.

(b) If a tank unit is contaminated, the computer calculates an average value from the other tank units in the same tank.

(c) If a densitometer fails a densitometer in one of the other tanks is used.

(8) FQIS Fault Detection

(a) The FQIS processor does almost all fault detection on the FQIS automatically. The FQIS processor continuously does a test on the system and its components, while the FQIS functions. If a fault is found, an EICAS maintenance message, FUEL QTY BITE, is shown and the fault is kept in the computer memory for recall by the maintenance crew.

BOEING PROPRIETARY - Copyright (C) - Unpublished Work - See title page for details.

(b) Faults are recorded by flight leg from the current flight leg (0) to 99. The transition from one flight leg to another is at the GROUND-AIR transition on airplane takeoff. Each time the flight leg changes from ground to air, all flight leg numbers are increased by one.

(c) To recall faults from memory, operate the built-in-test controls on the front panel of the FQIS processor.

(d) There are six primary BIT menu options on the FQIS processor. The six buttons on FQIS processor are used to get access to the six menus.

1) PRESENT FAULTS menu - shows all present system faults.
2) FAULT HISTORY menu - shows all system faults for the last 64 flights.
3) SYSTEM DATA menu - shows uplift, main and center fuel tank data (fuel mass, density, volume, capacitance).
4) SELF TEST menu - does a test of the FQIS system.
5) SYSTEM CONFIG menu - shows the status of all six circuit cards in the FQIS processor.
6) ERASE FAULT HISTORY menu - erase fault history.

B. FQIS Accuracy Data

(1) This table gives total system errors for the FQIS as percent of tank full scale at nominal pitch and roll attitude.

FUEL QUANTITY ACCURACY		
GROUND MODE	L & R MAIN TANK	± 1.0 percent
	CENTER AUX TANK	± 1.0 percent
AIR MODE	L & R MAIN TANK > 33 percent full	± 2.0 percent
	L & R MAIN TANK < 33 percent full	± 0.75 percent
	CENTER AUX TANK	± 2.0 percent

BOEING PROPRIETARY - Copyright (C) - Unpublished Work - See title page for details.

FUEL QUANTITY INDICATING SYSTEM

COMPONENT	FIG. 102 SHT	QTY	ACCESS/AREA	AMM REFERENCE
COMPENSATOR - L MAIN TANK, TS300	5	1	532BB, L MAIN FUEL TANK	28-41-02
COMPENSATOR - R AUX TANK, TS328	5	1	631BB, AUX FUEL TANK	28-41-02
COMPENSATOR - R MAIN TANK, TS334	5	1	632BB, R MAIN FUEL TANK	28-41-02
CIRCUIT BREAKER -			FLT COMPT, P6	
FUELING QTY, C1045		1	6E4	*
CIRCUIT BREAKER -			FLT COMPT, P11	
FUEL QTY NO. 1, C1048		1	11C34	*
FUEL QTY NO. 2, C1053		1	11M19	*
CIRCUIT BREAKER -			119AL, MAIN EQUIP CTR, P34	
FUEL QTY REFUEL, C1040		1	34L2	*
COMPUTER - (FIM 31-41-00/101)				
EICAS L, M10181				
EICAS R, M10182				
DENSITOMETER - L MAIN TANK, M596	4	1	551SB, L REAR SPAR	28-41-03
DENSITOMETER - R AUX TANK, M720	4	1	651QB, R REAR SPAR	28-41-03
DENSITOMETER - R MAIN TANK, M597	4	1	651SB, R REAR SPAR	28-41-03
FUEL QUANTITY PROCESSOR UNIT (FQPU), M121	9	1	119AL, MAIN EQUIP CTR, E2-4	28-41-08
HARNESS - L AUX TANK WIRING, M728	6	1	531BB, L AUX FUEL TANK	28-41-09
HARNESS - L MAIN TANK WIRING, M726	8	1	L MAIN FUEL TANK	28-41-09
HARNESS - R AUX TANK WIRING, M729	7	1	631BB, L AUX FUEL TANK	28-41-09
HARNESS - R MAIN TANK WIRING, M727	8	1	R MAIN FUEL TANK	28-41-09
INDICATOR - AUX TANK LOAD SELECT, N94	11	1	521QB, FUELING CONTROL PANEL, P28	28-41-06
INDICATOR - FUEL QTY, M10054	10	1	FLT COMPT, P5	28-41-04
INDICATOR - L MAIN TANK LOAD SELECT, N92	11	1	521QB, FUELING CONTROL PANEL, P28	28-41-06
INDICATOR - R MAIN TANK LOAD SELECT, N93	11	1	521QB, FUELING CONTROL PANEL, P28	28-41-06
LIGHT - (FIM 28-22-00/101)				
CONFIG				
PANEL - (FIM 28-43-00/101)				
MISC TEST, M10398				
PLUG - L AUX TANK HI-Z BUSSING, M724	5	1	551QB, L REAR SPAR	*
PLUG - L MAIN TANK HI-Z BUSSING, M722	5	1	552HB, L REAR SPAR	*
PLUG - R AUX TANK HI-Z BUSSING, M725	5	1	651QB, R REAR SPAR	*
PLUG - R MAIN TANK HI-Z BUSSING, M723	5	1	652HB, R REAR SPAR	*
RELAY - (FIM 31-01-36/101)				
FUEL QTY PWR TRANS, K356				
FUELING PWR CONT, K179				
FUELING PWR TRANS, K357				
RELAY - (FIM 31-01-37/101)				
SYS NO. 1 AIR/GND, K716				
SYS NO. 2 AIR/GND, K206				
SWITCH - TEST INDICATOR, S457	11	1	521QB, FUELING CONTROL PANEL, P28	*
SWITCH - FUEL QTY TEST, YEIS6	10	1	FLT COMPT, P61, MISC TEST PANEL, M10398	*

* SEE THE WDM EQUIPMENT LIST

Fuel Quantity Indicating System - Component Index
Figure 101 (Sheet 1)

BOEING PROPRIETARY - Copyright (C) - Unpublished Work - See title page for details.

COMPONENT	FIG. 102 SHT	QTY	ACCESS/AREA	AMM REFERENCE
UNIT - L AUX TANK				
NO. 1, TS319	5	1	531BB	28-41-01
NO. 2, TS318	5	1	531BB	28-41-01
NO. 3, TS317	5	1	531BB	28-41-01
NO. 4, TS316	5	1	531BB	28-41-01
NO. 5, TS320		1	136KZ	28-41-01
UNIT - L MAIN TANK				
NO. 1, TS314	5	1	532BB	28-41-01
NO. 2, TS313	5	1	532BB	28-41-01
NO. 3, TS312	5	1	532BB	28-41-01
NO. 4, TS311	5	1	532BB	28-41-01
NO. 5, TS310	5	1	532BB	28-41-01
NO. 6, TS309	5	1	541BB	28-41-01
NO. 7, TS308	5	1	541CB	28-41-01
NO. 8, TS307	5	1	541EB	28-41-01
NO. 9, TS306	5	1	541HB	28-41-01
NO. 10, TS305	5	1	541KB	28-41-01
NO. 11, TS304	5	1	541PB	28-41-01
NO. 12, TS303	5	1	541TB	28-41-01
NO. 13, TS302	5	1	541VB	28-41-01
NO. 14, TS301	5	1	541XB	28-41-01
UNIT - R AUX TANK				
NO. 1, TS329	5	1	631BB	28-41-01
NO. 2, TS330	5	1	631BB	28-41-01
NO. 3, TS331	5	1	631BB	28-41-01
NO. 4, TS332	5	1	631BB	28-41-01
UNIT - R MAIN TANK				
NO. 1, TS335	5	1	632BB	28-41-01
NO. 2, TS336	5	1	632BB	28-41-01
NO. 3, TS337	5	1	632BB	28-41-01
NO. 4, TS338	5	1	632BB	28-41-01
NO. 5, TS339	5	1	632BB	28-41-01
NO. 6, TS340	5	1	641BB	28-41-01
NO. 7, TS341	5	1	641CB	28-41-01
NO. 8, TS342	5	1	641EB	28-41-01
NO. 9, TS343	5	1	641HB	28-41-01
NO. 10, TS344	5	1	641KB	28-41-01
NO. 11, TS345	5	1	641PB	28-41-01
NO. 12, TS346	5	1	641TB	28-41-01
NO. 13, TS347	5	1	641VB	28-41-01
NO. 14, TS348	5	1	641XB	28-41-01

Fuel Quantity Indicating System - Component Index
Figure 101 (Sheet 2)

BOEING PROPRIETARY - Copyright (C) - Unpublished Work - See title page for details.

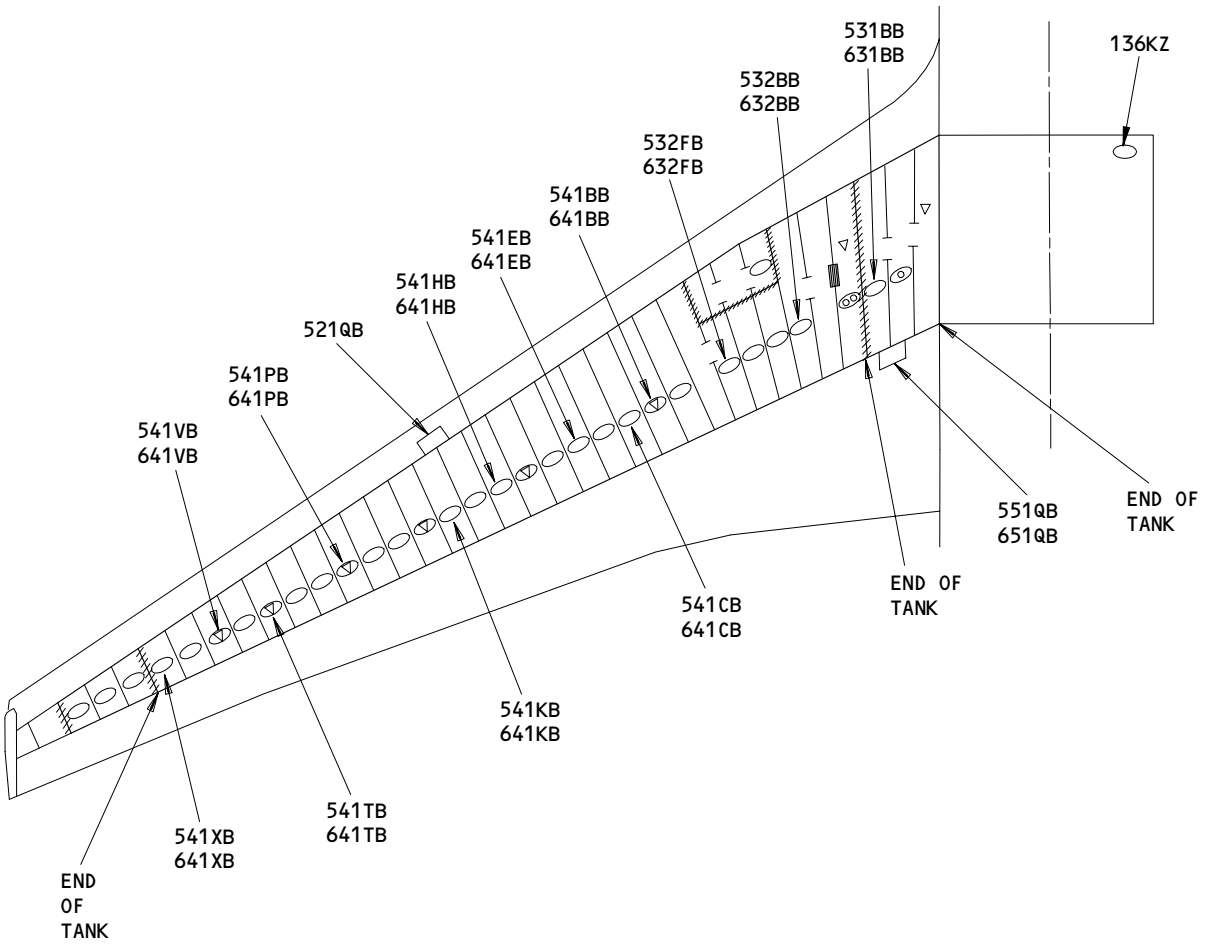

ACCESS PANELS

NOTE: 500 SERIES PANELS ON LEFT WING,
600 SERIES PANELS ON RIGHT WING.

Fuel Quantity Indicating System - Component Location
Figure 102 (Sheet 1)

BOEING PROPRIETARY - Copyright (C) - Unpublished Work - See title page for details.

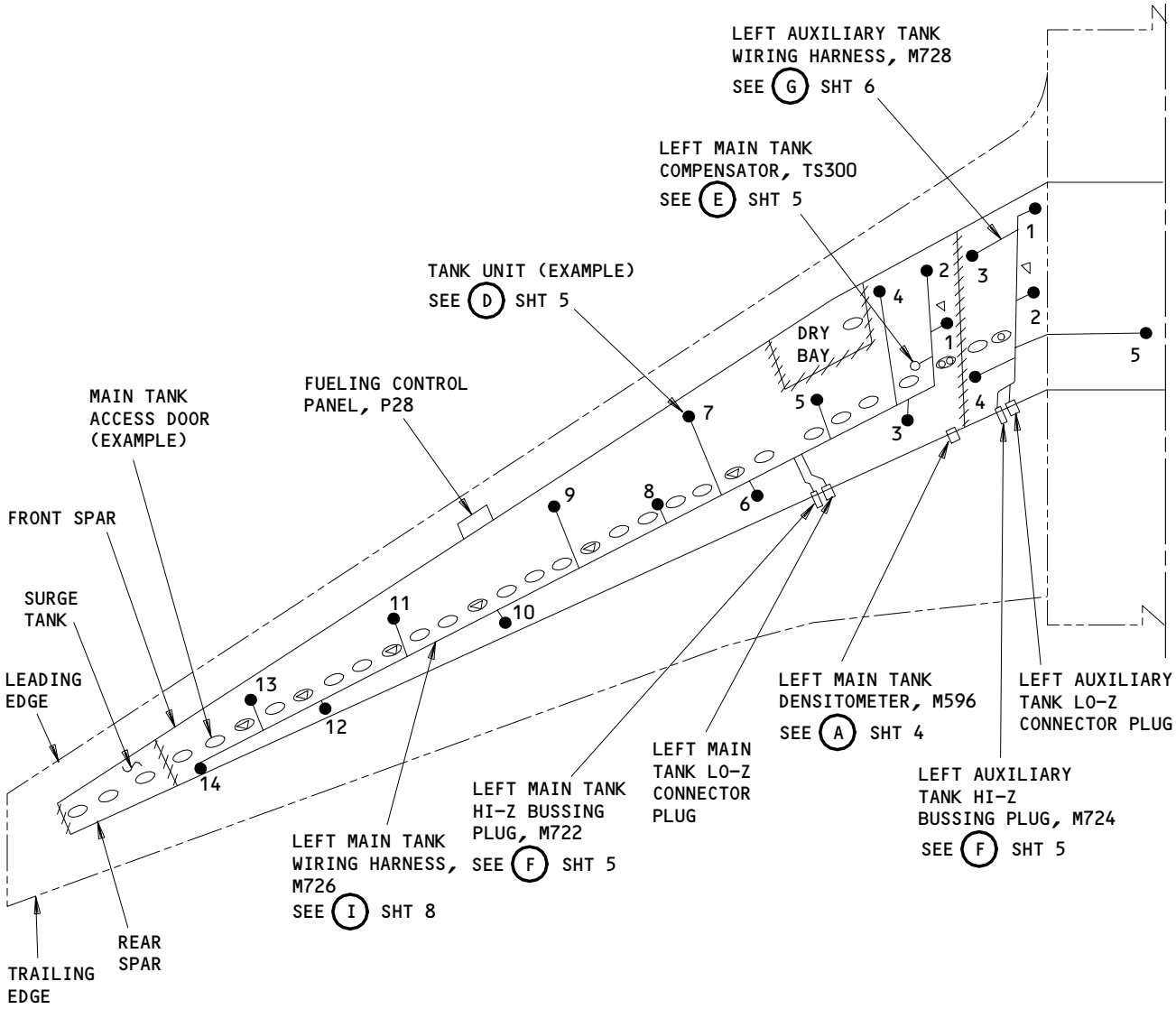

LEFT WING

Fuel Quantity Indicating System - Component Location
Figure 102 (Sheet 2)

EFFECTIVITY
SAS 050, 051, 151-157, 162-167;
MTH 275-278, 280

F15600

BOEING PROPRIETARY - Copyright (C) - Unpublished Work - See title page for details.

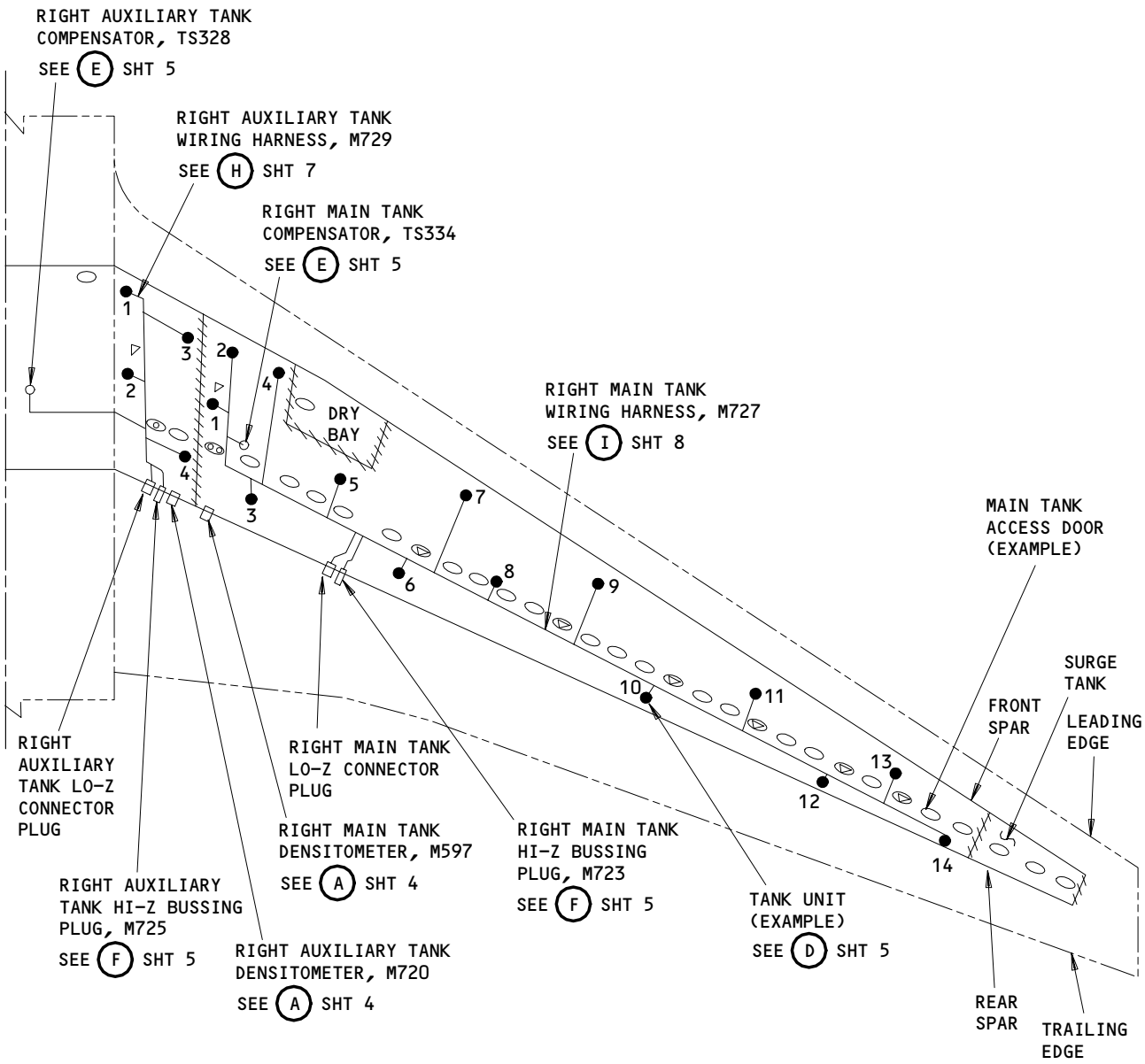

RIGHT WING

Fuel Quantity Indicating System - Component Location
Figure 102 (Sheet 3)

EFFECTIVITY
SAS 050, 051, 151-157, 162-167;
MTH 275-278, 280

F15624

BOEING PROPRIETARY - Copyright (C) - Unpublished Work - See title page for details.

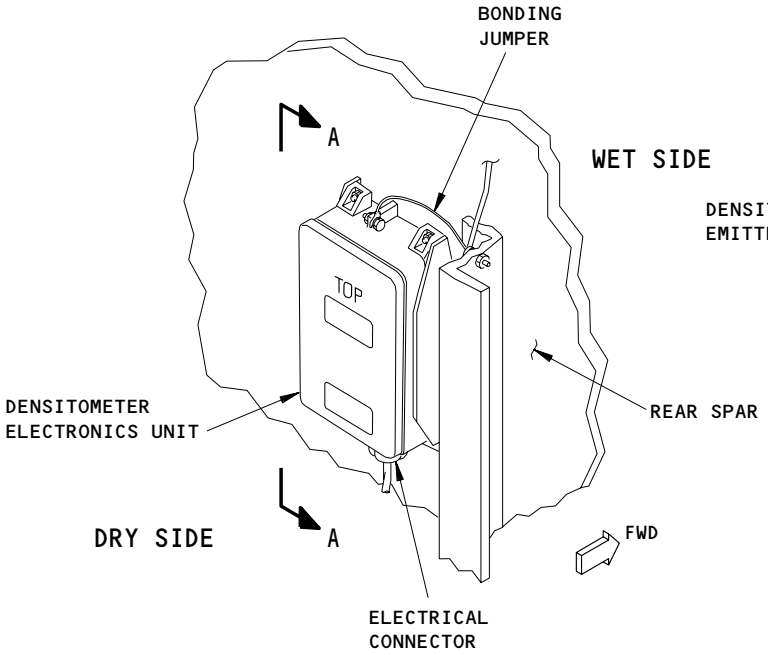

LEFT MAIN TANK DENSITOMETER, M596
RIGHT AUXILIARY TANK DENSITOMETER, M720
RIGHT MAIN TANK DENSITOMETER, M597

(A) FROM SHT 2 AND 3

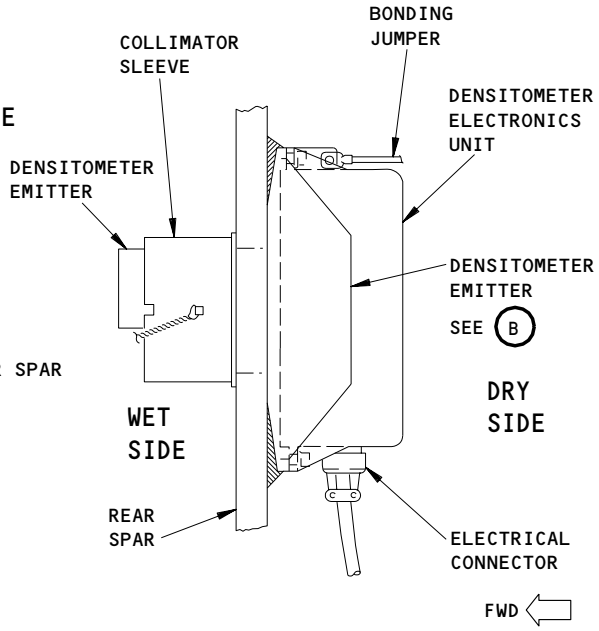

A-A

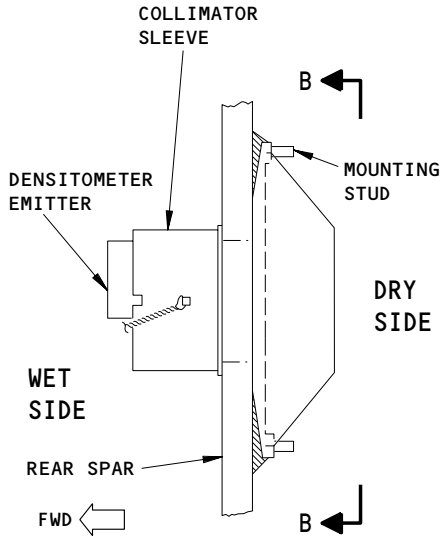

DENSITOMETER EMITTER
(SHOWN WITH DENSITOMETER
ELECTRONICS UNIT REMOVED)

(B)

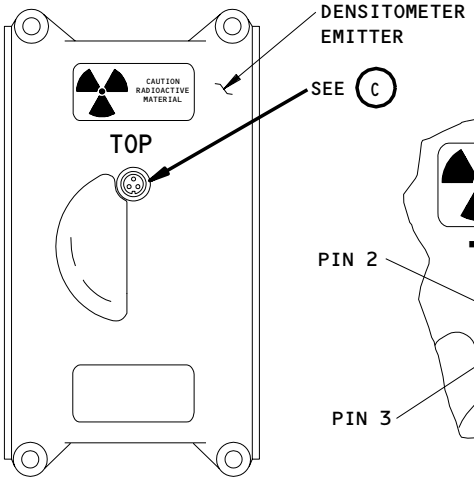

B-B

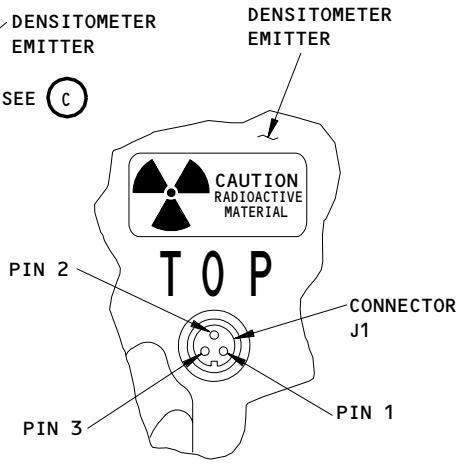

(C)

Fuel Quantity Indicating System - Component Location
Figure 102 (Sheet 4)

BOEING PROPRIETARY - Copyright (C) - Unpublished Work - See title page for details.

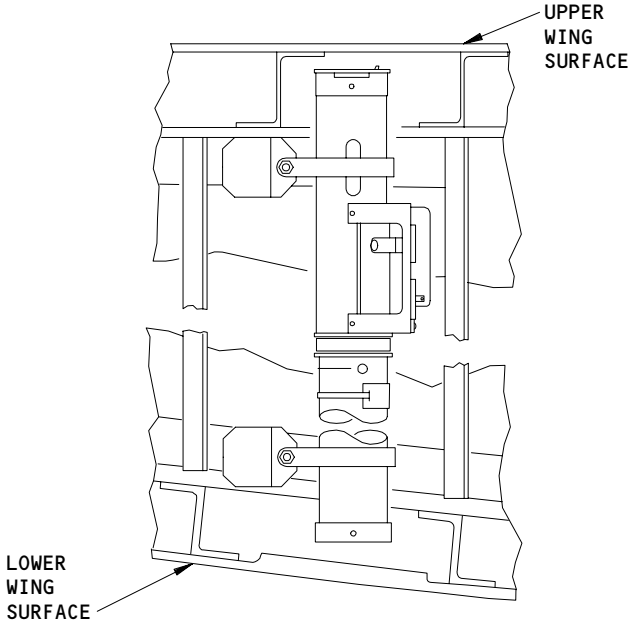

TANK UNIT INSTALLATION (EXAMPLE)

D

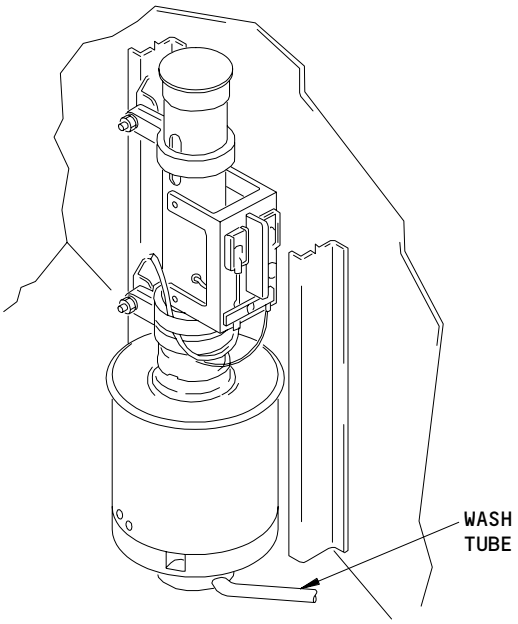

LEFT MAIN TANK COMPENSATOR, TS300
RIGHT AUXILIARY TANK COMPENSATOR, TS328
RIGHT MAIN TANK COMPENSATOR, TS334

E

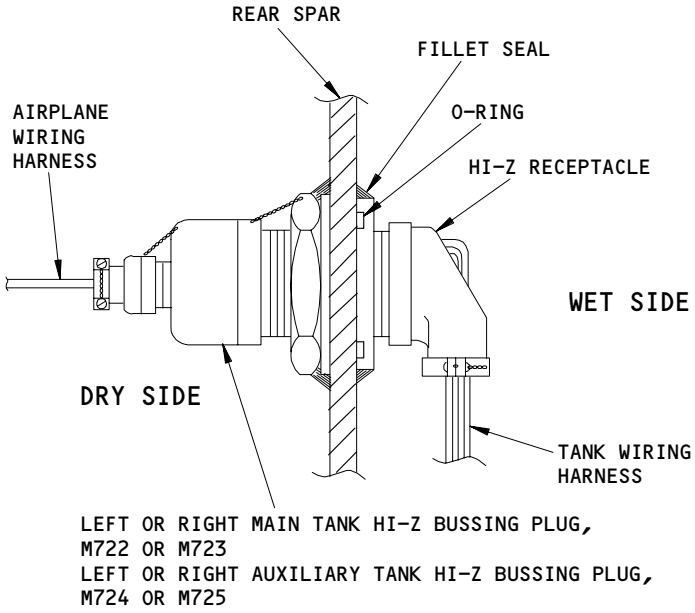

F

Fuel Quantity Indicating System - Component Location (Details from Shts 2 and 3)
Figure 102 (Sheet 5)

BOEING PROPRIETARY - Copyright (C) - Unpublished Work - See title page for details.

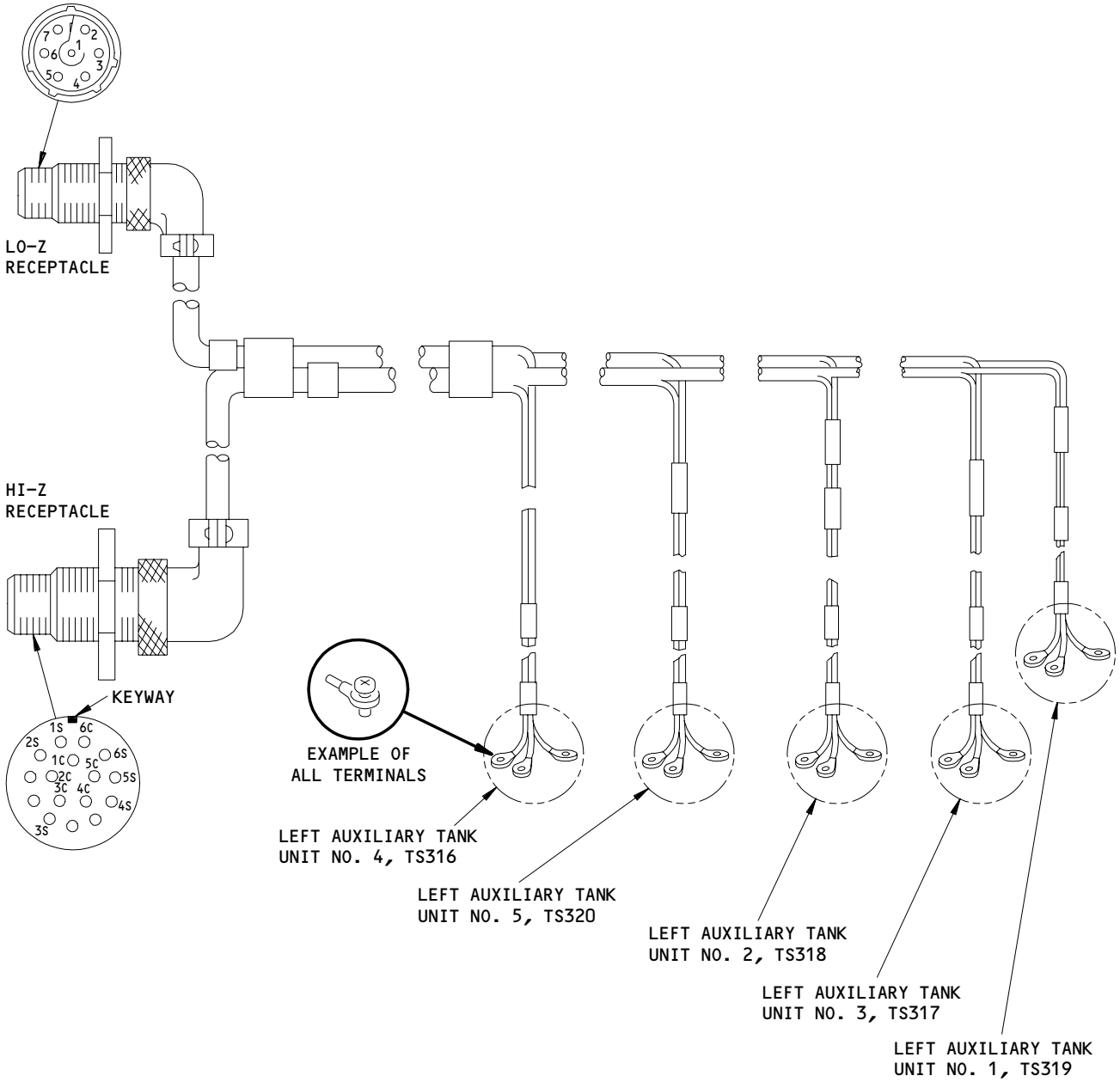

LEFT AUXILIARY TANK WIRING HARNESS, M728

G

Fuel Quantity Indicating System - Component Location (Detail from Sht 2)
Figure 102 (Sheet 6)

BOEING PROPRIETARY - Copyright (C) - Unpublished Work - See title page for details.

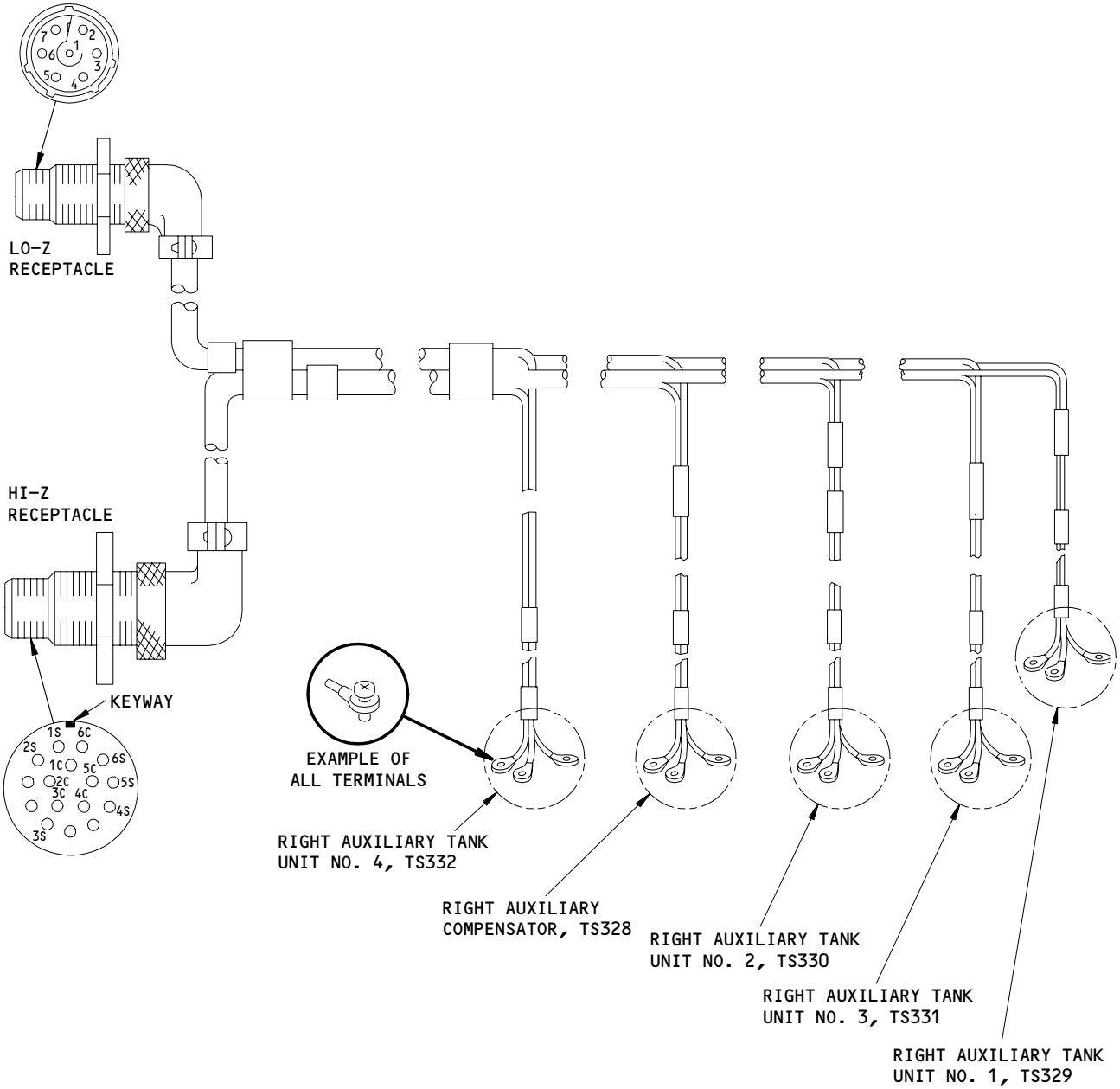

RIGHT AUXILIARY TANK WIRING HARNESS, M729

H

Fuel Quantity Indicating System - Component Location (Detail from Sht 3)
Figure 102 (Sheet 7)

BOEING PROPRIETARY - Copyright (C) - Unpublished Work - See title page for details.

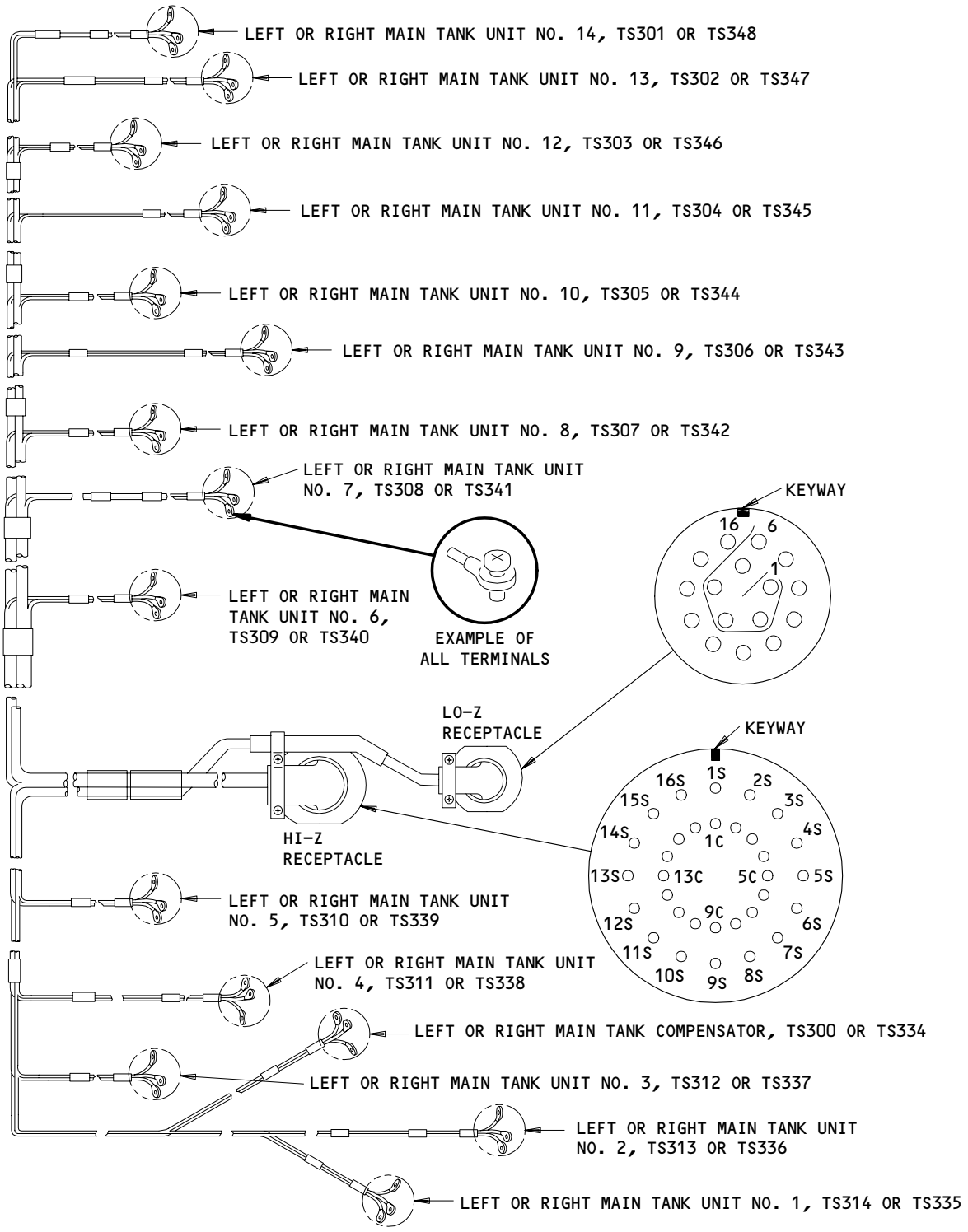

LEFT OR RIGHT MAIN TANK WIRING HARNESS, M726 OR M727

I

Fuel Quantity Indicating System - Component Location (Detail from Shts 2 and 3)
Figure 102 (Sheet 8)

BOEING PROPRIETARY - Copyright (C) - Unpublished Work - See title page for details.

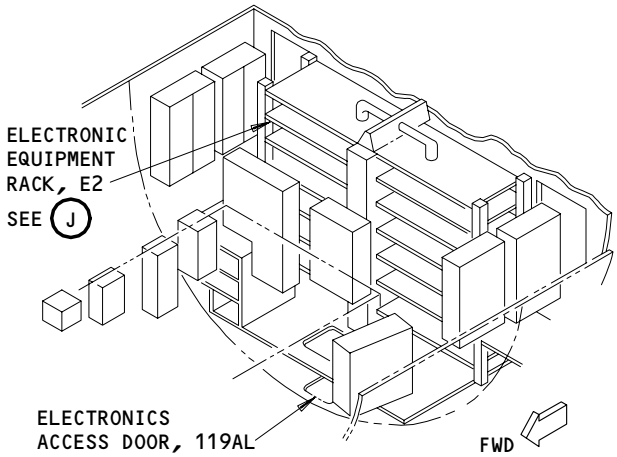

MAIN EQUIPMENT CENTER

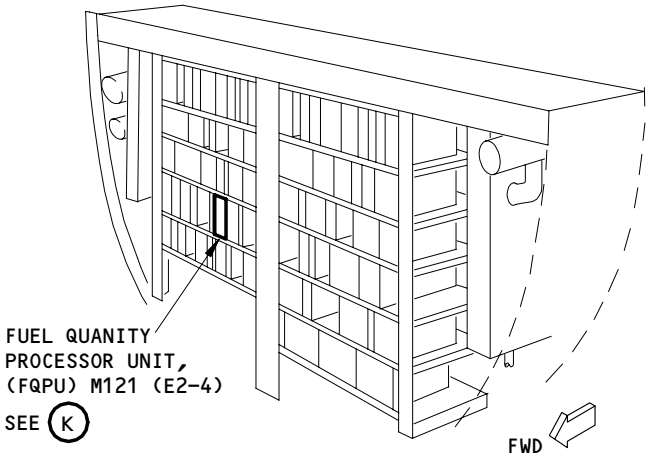

ELECTRONIC EQUIPMENT RACK, E2

J

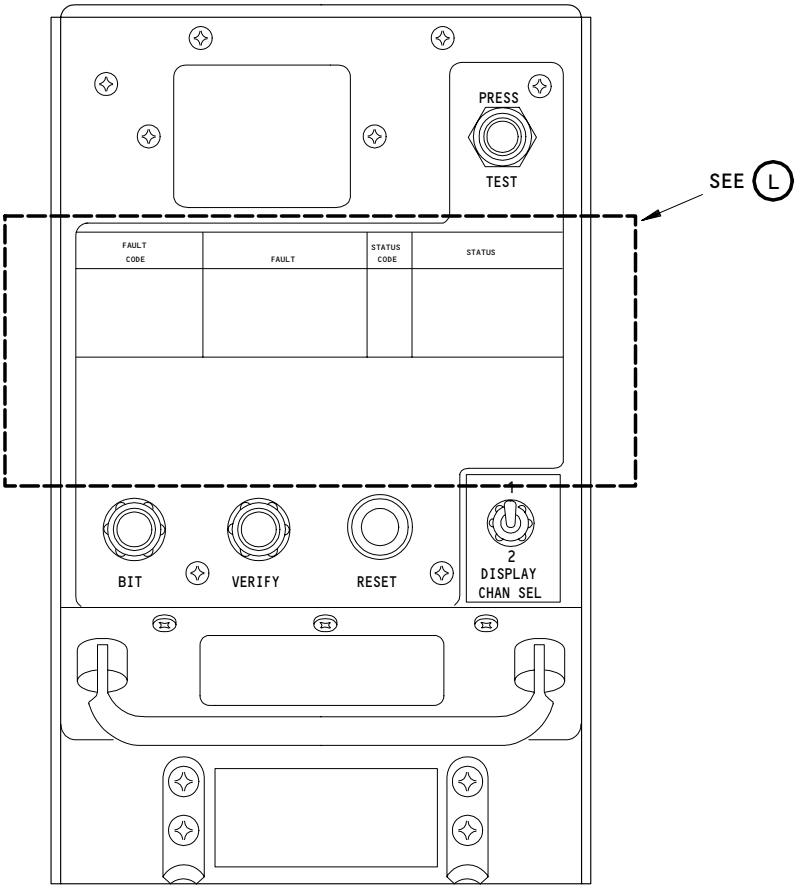

FQPU, M121

K

Fuel Quantity Indicating System - Component Location
Figure 102 (Sheet 9)

BOEING PROPRIETARY - Copyright (C) - Unpublished Work - See title page for details.

FAULT CODE	FAULT	STATUS CODE	STATUS
01-14,51-64,C1,C4	LEFT } TANK COMPONENT OR WIRING	00	BIT COMPLETE
21-30,71-80,C2,C5	AUX } TANK COMPONENT OR WIRING	F1	RESET IN PROGRESS
31-44,81-94,C3,C6	RIGHT } TANK COMPONENT OR WIRING	F2	RESET SUCCESSFUL
C7	LOAD SELECT CONTROL	F3	RESET FAIL ⚠
C8	AIRCRAFT DISCRETE INPUT	F4	VERIFY IN PROGRESS
D1,D4,D7,D2,D5	DENSITOMETER OR WIRING	F5	VERIFY NO FAULTS
D8,D3,D6,D9	(L,AUX,R)	F6	VERIFY FAULTS EXIST ⚠
E1,E2,E3,E4	FLT DECK IND (L,AUX,R,TOT)	F7/	VERIFY DISABLED-FUEL DR OPEN/
A1-A9,B1-B9	PROCESSOR UNIT ⚠	F8	FLT DECK FUEL QTY TEST ACTIVE

PROCEDURE: 1. OPERATE PRESS TEST AND HOLD. DISPLAY SHALL READ 88. IF 88 NOT DISPLAYED, THE SELECTED PROCESSOR CHANNEL IS UNPOWERED OR INOPERATIVE. ⚠

2. REPEAT STEP 1 WITH DISPLAY CHAN SEL SWITCH IN OPPOSITE POSITION.
3. PRESS BIT TO DISPLAY FAULT CODE. RECORD FAULT CODE. REPEAT UNTIL DISPLAY BLANKS
4. PRESS RESET TO CLEAR MEMORY. AFTER F2 OR F3 PRESS RESET TO BLANK DISPLAY, REPEAT IF F3

5. PRESS VERIFY. F5 - NO FURTHER MAINTENANCE INDICATED
F6 - PRESS VERIFY TO BLANK DISPLAY. REPEAT STEP 3. SEE BOEING FAULT ISOLATION/MAINTENANCE MANUAL, 28-41-00 FOR FQIS REPAIR.

⚠ CHECK FOR POWER BUS OFF

PROCESSOR S345T002-48, -49, OR -61

FAULT CODE	FAULT	STATUS CODE	STATUS
01-14,51-64,C1,C4	LEFT } TANK COMPONENT OR WIRING	00	BIT COMPLETE
21-30,71-80,C2,C5	AUX } TANK COMPONENT OR WIRING	F1	RESET IN PROGRESS
31-44,81-94,C3,C6	RIGHT } TANK COMPONENT OR WIRING	F2	RESET SUCCESSFUL
C7	LOAD SELECT CONTROL	F3	RESET FAIL ⚠
C8	AIRCRAFT DISCRETE INPUT	F4	VERIFY IN PROGRESS
D1,D2,D3	DENSITOMETER (L,AUX,R)	F5	VERIFY NO FAULTS
E1,E2,E3,E4	FLT DECK IND (L,AUX,R,TOT)	F6	VERIFY FAULTS EXIST ⚠
A1-A9,B1-B9	PROCESSOR UNIT ⚠	F7	VERIFY DISABLED-FUEL DR OPEN

PROCEDURE: (DO NOT OPERATE DISPLAY CHAN SEL SWITCH UNLESS DISPLAY IS BLANK.)

1. OPERATE PRESS TEST AND HOLD. DISPLAY SHALL READ 88. IF 88 NOT DISPLAYED, THE SELECTED PROCESSOR CHANNEL IS UNPOWERED OR INOPERATIVE. ⚠
2. REPEAT STEP 1 WITH DISPLAY CHAN SEL SWITCH IN OPPOSITE POSITION.
3. PRESS BIT TO DISPLAY FAULT CODE. RECORD FAULT CODE. REPEAT UNTIL DISPLAY BLANKS.
4. PRESS RESET TO CLEAR MEMORY. AFTER F2 OR F3 PRESS RESET TO BLANK DISPLAY. REPEAT IF F3.
5. PRESS VERIFY. F5 - NO FURTHER MAINTENANCE INDICATED.
F6 - PRESS VERIFY TO BLANK DISPLAY. REPEAT STEP 3. SEE BOEING FAULT ISOLATION/MAINTENANCE MANUAL, 28-41-00 FOR FQIS REPAIR.

⚠ CHECK FOR POWER BUS OFF

PROCESSOR S345T002-46, -47, OR -60

L

Fuel Quantity Indicating System - Component Location
Figure 102 (Sheet 10)

EFFECTIVITY
SAS 050, 051, 151-157, 162-167;
MTH 275-278, 280

F15629

BOEING PROPRIETARY - Copyright (C) - Unpublished Work - See title page for details.

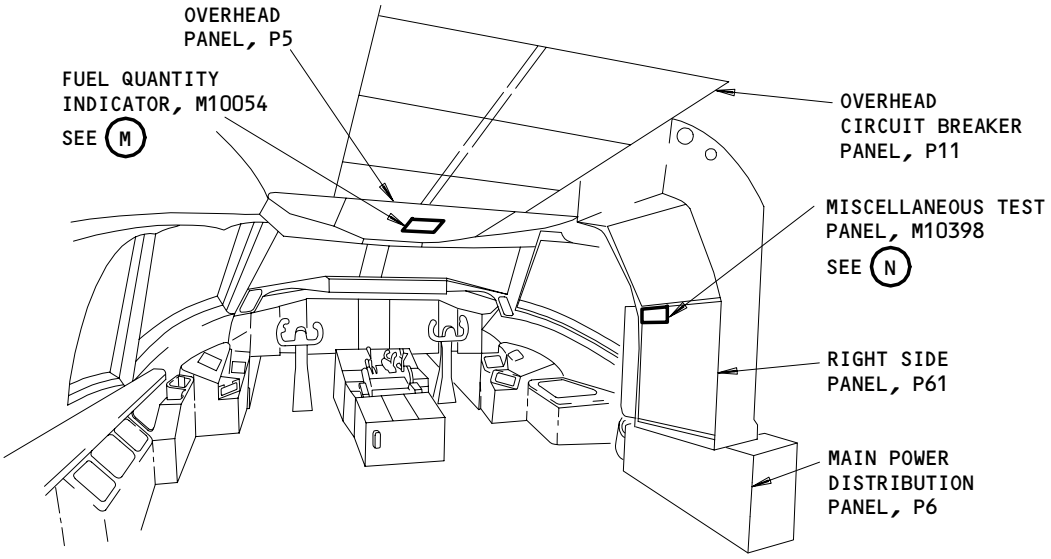

FLIGHT COMPARTMENT

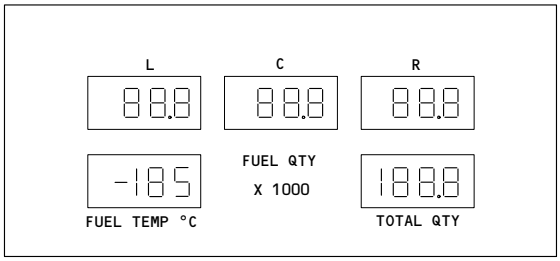

FUEL QUANTITY INDICATOR, M10054

M

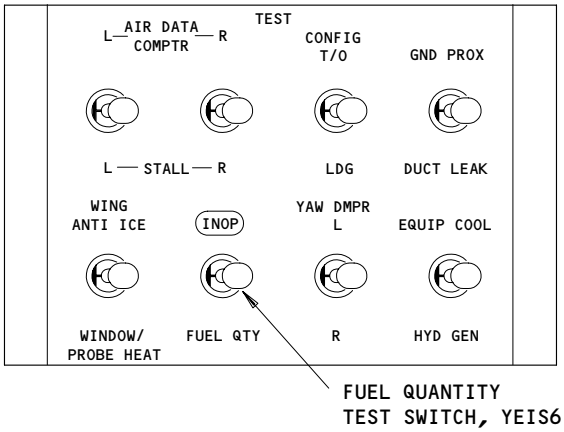

MISCELLANEOUS TEST PANEL, M10398

N

Fuel Quantity Indicating System - Component Location
Figure 102 (Sheet 11)

EFFECTIVITY
SAS 050, 051, 151-157, 162-167;
MTH 275-278, 280

F15951

BOEING PROPRIETARY - Copyright (C) - Unpublished Work - See title page for details.

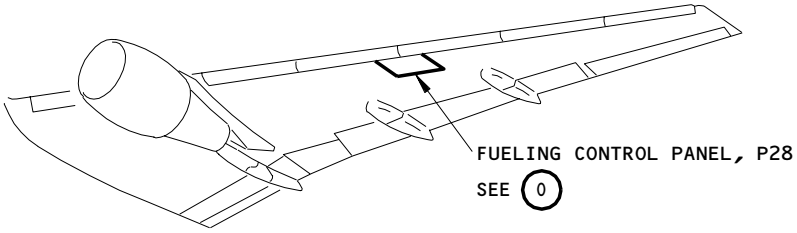

LEFT WING

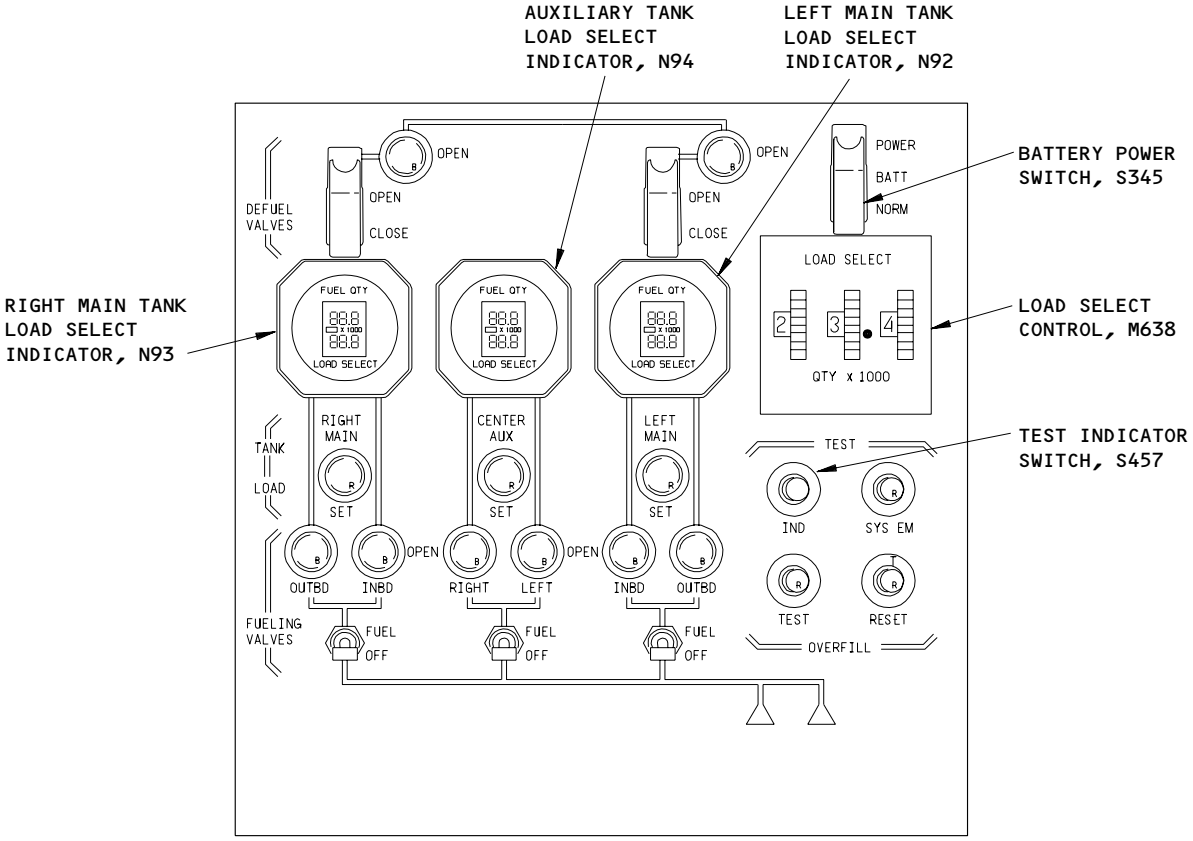

FUELING CONTROL PANEL, P28

0

Fuel Quantity Indicating System - Component Location
Figure 102 (Sheet 12)

BOEING PROPRIETARY - Copyright (C) - Unpublished Work - See title page for details.

FUEL QUANTITY INDICATING SYSTEM

COMPONENT	FIG. 102 SHT	QTY	ACCESS/AREA	AMM REFERENCE
COMPENSATOR - L MAIN TANK, TS300	7	1	532BB, L FUEL TANK	28-41-02
COMPENSATOR - R AUX TANK, TS328	7	1	136KZ, AUX FUEL TANK	28-41-02
COMPENSATOR - R MAIN TANK, TS334	7	1	632BB, R FUEL TANK	28-41-02
CIRCUIT BREAKER -			FLT COMPT, P6	
FUELING QTY, C1045		1	6E4	*
CIRCUIT BREAKERS -			FLT COMPT, P11	
FUEL QTY NO. 1, C1048		1	11C34	*
FUEL QTY NO. 2, C1053		1	11M19	*
CIRCUIT BREAKER -			119AL, MAIN EQUIP CTR, P34	
FUEL QTY REFUEL, C1040		1	34L2	*
COMPUTERS - (FIM 31-41-00/101)				
EICAS L, M10181				
EICAS R, M10182				
DENSITOMETER - L MAIN TANK, M596	11	1	532BB, L FUEL TANK	28-41-03
DENSITOMETER - R AUX TANK, M720	11	1	136KZ, AUX FUEL TANK	28-41-03
DENSITOMETER - R MAIN TANK, M597	11	1	632, R FUEL TANK	28-41-03
HARNESS - DENSITOMETER L MAIN TANK, M1930	12	1	532BB, L FUEL TANK	28-41-09
HARNESS - DENSITOMETER R AUX TANK, M1937	12	1	631BB, AUX FUEL TANK	28-41-09
HARNESS - DENSITOMETER R MAIN TANK, M1931	12	1	632BB, R FUEL TANK	28-41-09
HARNESS - L AUX TANK, M1933 AND M1943	8	1	531BB	28-41-09
HARNESS - L MAIN TANK, M726 AND M1938	10	1	L FUEL TANK	28-41-09
HARNESS - R AUX TANK, M1934 AND M1942	9	1	631BB	28-41-09
HARNESS - R MAIN TANK, M727 AND M1939	10	1	R FUEL TANK	28-41-09
HOT SHORT PROTECTOR, M12168 [1]	13	1	631BB	28-41-24
INDICATOR - AUX TANK LOAD SELECT, N94	4	1	521QB, FUELING CONTROL PANEL, P28	28-41-06
INDICATOR - FUEL QTY, M10054	2	1	FLT COMPT, P5	28-41-04
INDICATOR - L MAIN TANK LOAD SELECT, N92	4	1	521QB, FUELING CONTROL PANEL, P28	28-41-06
INDICATOR - R MAIN TANK LOAD SELECT, N93	4	1	521QB, FUELING CONTROL PANEL, P28	28-41-06
LIGHT - (FIM 28-22-00/101)				
CONFIG				
PANEL - (FIM 28-43-00/101)				
MISC TEST, M10398				
RELAYS - (FIM 31-01-36/101)				
FUEL QTY PWR TRANS, K356				
FUELING PWR CONT, K179				
FUELING PWR TRANS, K357				
RELAYS - (FIM 31-01-37/101)				
SYS NO. 1 AIR/GND, K716				
SYS NO. 2 AIR/GND, K206				
SWITCH - TEST INDICATOR, S457	4	1	521QB, FUELING CONTROL PANEL, P28	*
SWITCH - FUEL QTY TEST, YEIS6	2	1	FLT COMPT, P61, MISC TEST PANEL, M10398	*
UNIT- FQIS PROCESSOR, M121	3	1	119AL, MAIN EQUIP CTR, E2-4	28-41-08

* SEE THE WDM EQUIPMENT LIST

[1] AIRPLANES WITH HOT SHORT PROTECTOR (POST-SB 28A0094 OR PRR B13421-8)

Fuel Quantity Indicating System - Component Index
Figure 101 (Sheet 1)

BOEING PROPRIETARY - Copyright (C) - Unpublished Work - See title page for details.

COMPONENT	FIG. 102 SHT	QTY	ACCESS/AREA	REFERENCE
UNITS - L AUX TANK				
NO. 1, TS319	5	1	531BB	28-41-01
NO. 2, TS318	5	1	531BB	28-41-01
NO. 3, TS317	5	1	531BB	28-41-01
NO. 4, TS316	5	1	531BB	28-41-01
NO. 5, TS320		1	136KZ	28-41-01
UNITS - L MAIN TANK				
NO. 1, TS314	5	1	532BB	28-41-01
NO. 2, TS313	5	1	532BB	28-41-01
NO. 3, TS312	5	1	532BB	28-41-01
NO. 4, TS311	5	1	532BB	28-41-01
NO. 5, TS310	5	1	532BB	28-41-01
NO. 6, TS309	5	1	541BB	28-41-01
NO. 7, TS308	5	1	541CB	28-41-01
NO. 8, TS307	5	1	541EB	28-41-01
NO. 9, TS306	5	1	541HB	28-41-01
NO. 10, TS305	5	1	541KB	28-41-01
NO. 11, TS304	5	1	541PB	28-41-01
NO. 12, TS303	5	1	541TB	28-41-01
NO. 13, TS302	5	1	541VB	28-41-01
NO. 14, TS301	5	1	541XB	28-41-01
UNITS - R AUX TANK				
NO. 1, TS329	5	1	631BB	28-41-01
NO. 2, TS330	5	1	631BB	28-41-01
NO. 3, TS331	5	1	631BB	28-41-01
NO. 4, TS332	5	1	631BB	28-41-01
UNITS - R MAIN TANK				
NO. 1, TS335	5	1	632BB	28-41-01
NO. 2, TS336	5	1	632BB	28-41-01
NO. 3, TS337	5	1	632BB	28-41-01
NO. 4, TS338	5	1	632BB	28-41-01
NO. 5, TS339	5	1	632BB	28-41-01
NO. 6, TS340	5	1	641BB	28-41-01
NO. 7, TS341	5	1	641CB	28-41-01
NO. 8, TS342	5	1	641EB	28-41-01
NO. 9, TS343	5	1	641HB	28-41-01
NO. 10, TS344	5	1	641KB	28-41-01
NO. 11, TS345	5	1	641PB	28-41-01
NO. 12, TS346	5	1	641TB	28-41-01
NO. 13, TS347	5	1	641VB	28-41-01
NO. 14, TS348	5	1	641XB	28-41-01

* SEE THE WDM EQUIPMENT LIST

Fuel Quantity Indicating System - Component Index
Figure 101 (Sheet 2)

BOEING PROPRIETARY - Copyright (C) - Unpublished Work - See title page for details.

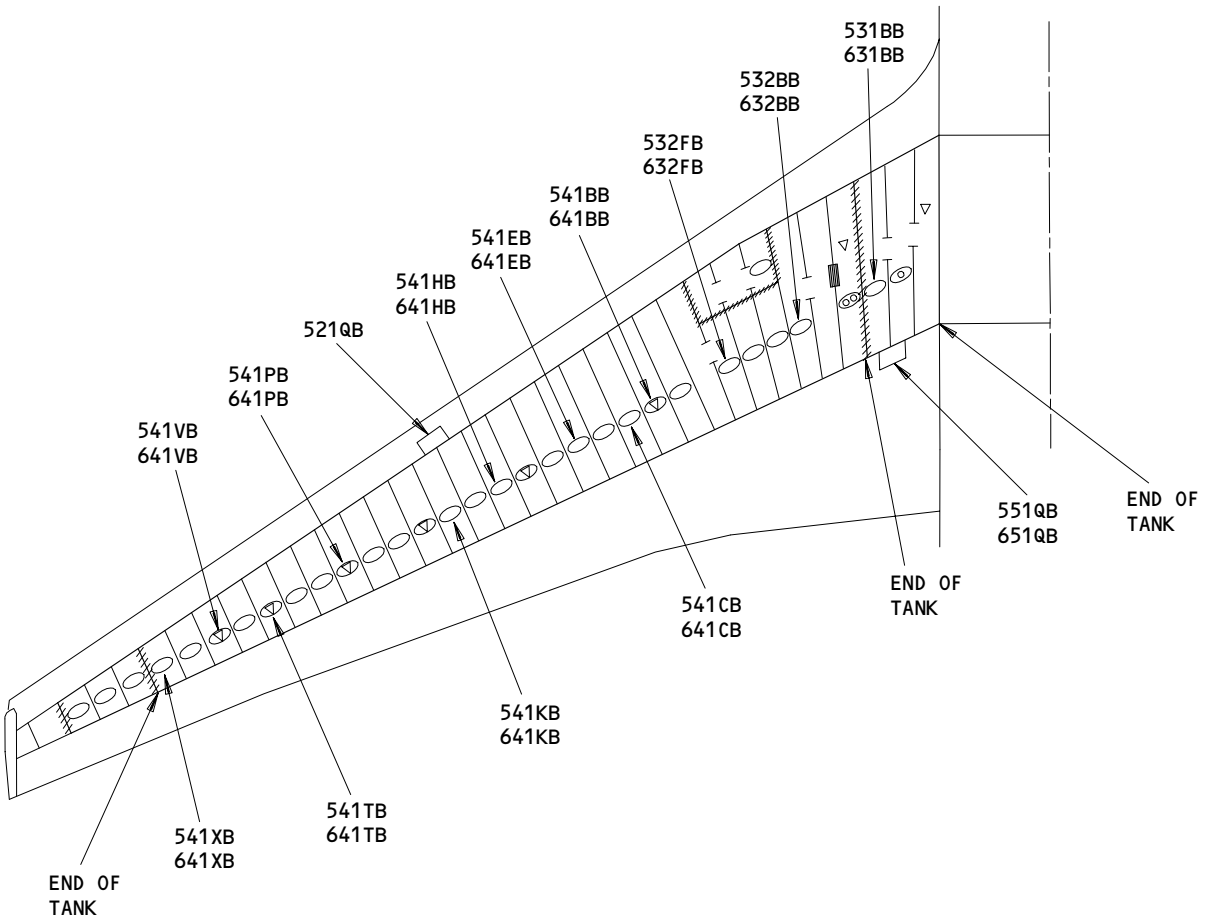

ACCESS PANELS

NOTE: 500 SERIES PANELS ON LEFT WING,
600 SERIES PANELS ON RIGHT WING.

Fuel Quantity Indicating System - Component Location
Figure 102 (Sheet 1)

BOEING PROPRIETARY - Copyright (C) - Unpublished Work - See title page for details.

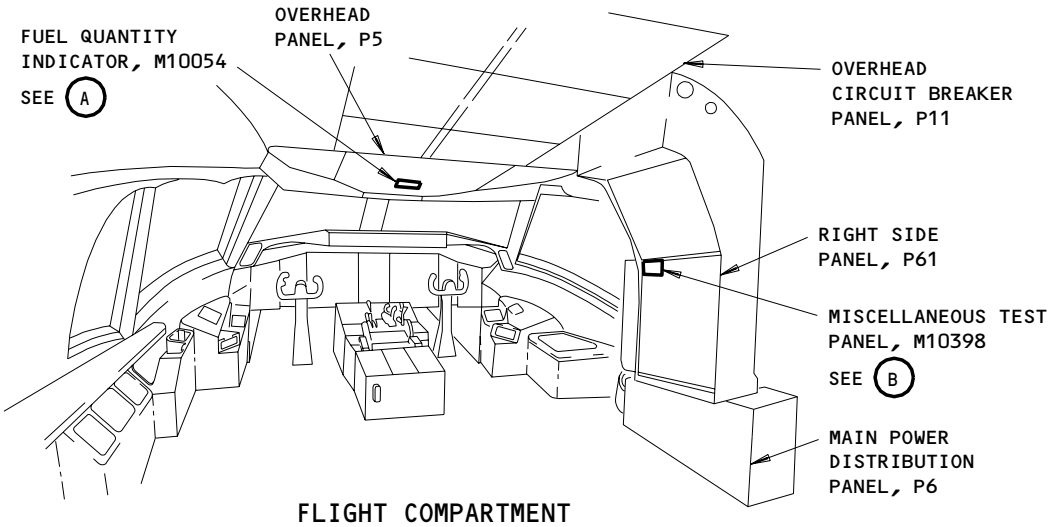

FLIGHT COMPARTMENT

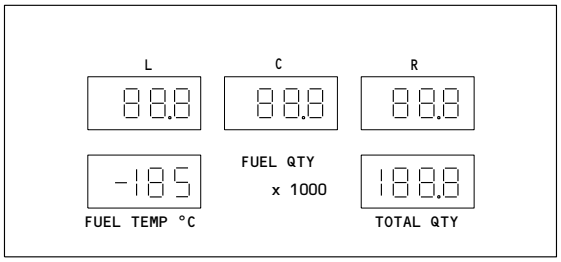

FUEL QUANTITY INDICATOR, M10054

A

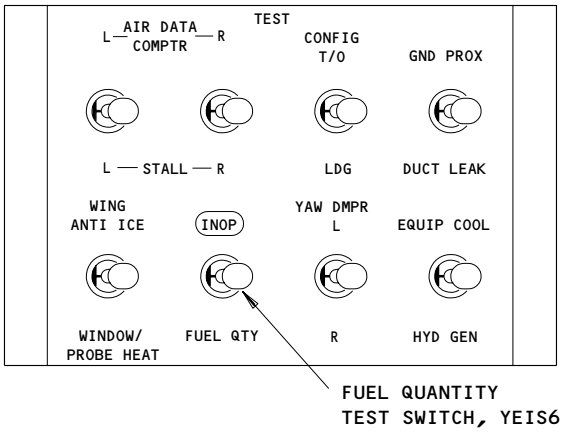

MISCELLANEOUS TEST PANEL, M10398

B

Fuel Quantity Indicating System - Component Location
Figure 102 (Sheet 2)

BOEING PROPRIETARY - Copyright (C) - Unpublished Work - See title page for details.

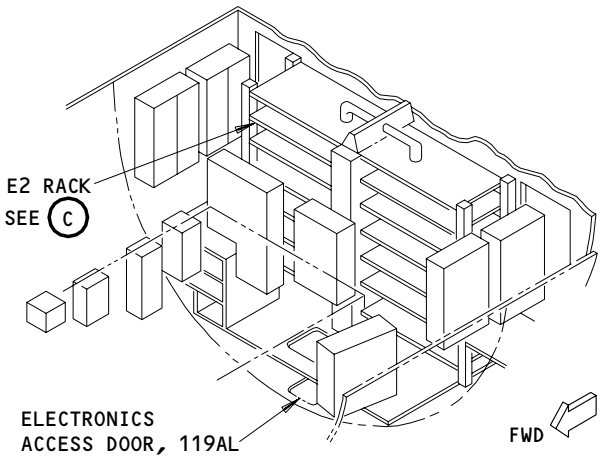

MAIN EQUIPMENT CENTER

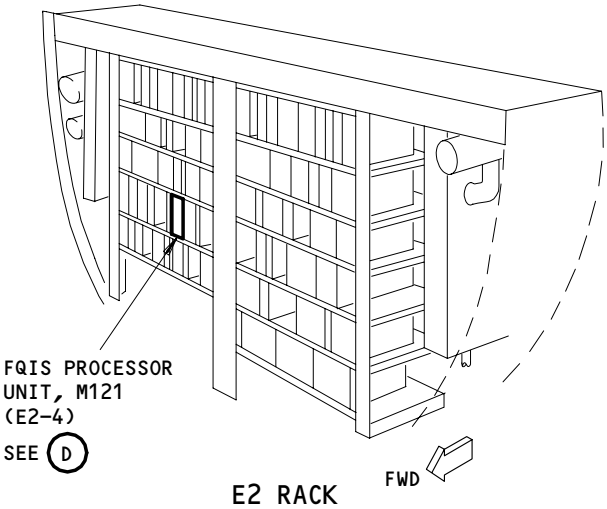

E2 RACK

C

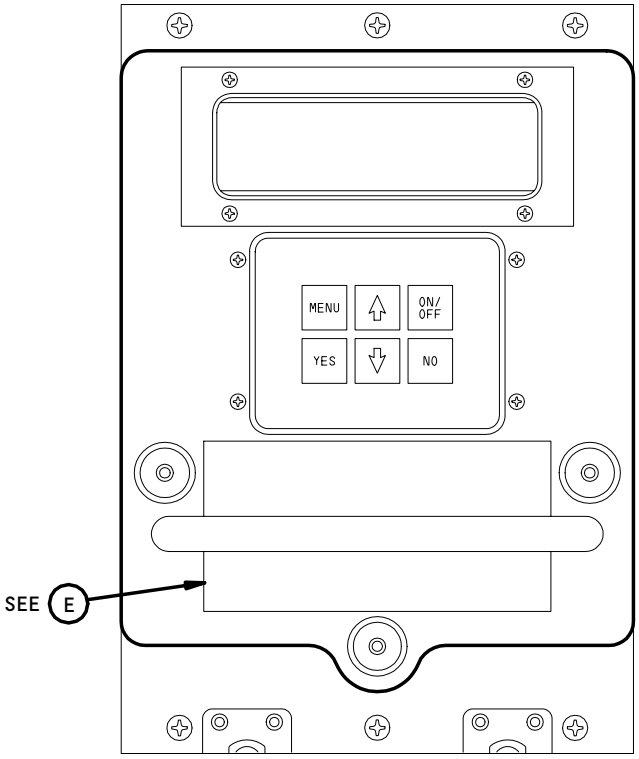

FQIS PROCESSOR, M121

D

INSTRUCTIONS:

Press ON to start BITE display
Press YES or NO in response to questions (?)
Press ⇧ to display next result
Press ⇩ to display previous result
Press MENU to return to current menu
Press OFF to stop BITE display

PRIMARY BITE MENU OPTIONS:

FAULT HISTORY: Displays past faults by flight leg
SYSTEM DATA: Displays system/LRU Data
SELF TEST: Tests system/LRUs interfaces
SYSTEM CONFIG: Displays system configuration
ERASE FAULT HISTORY:

E

Fuel Quantity Indicating System - Component Location
Figure 102 (Sheet 3)

BOEING PROPRIETARY - Copyright (C) - Unpublished Work - See title page for details.

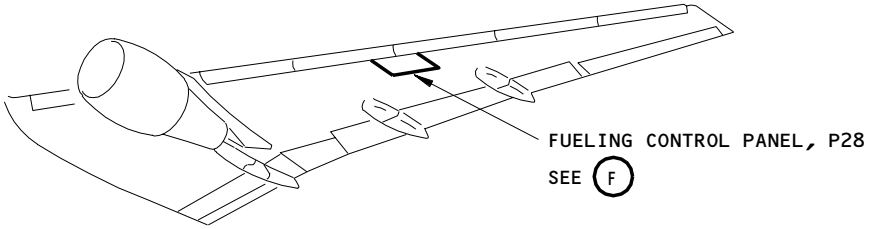

LEFT WING

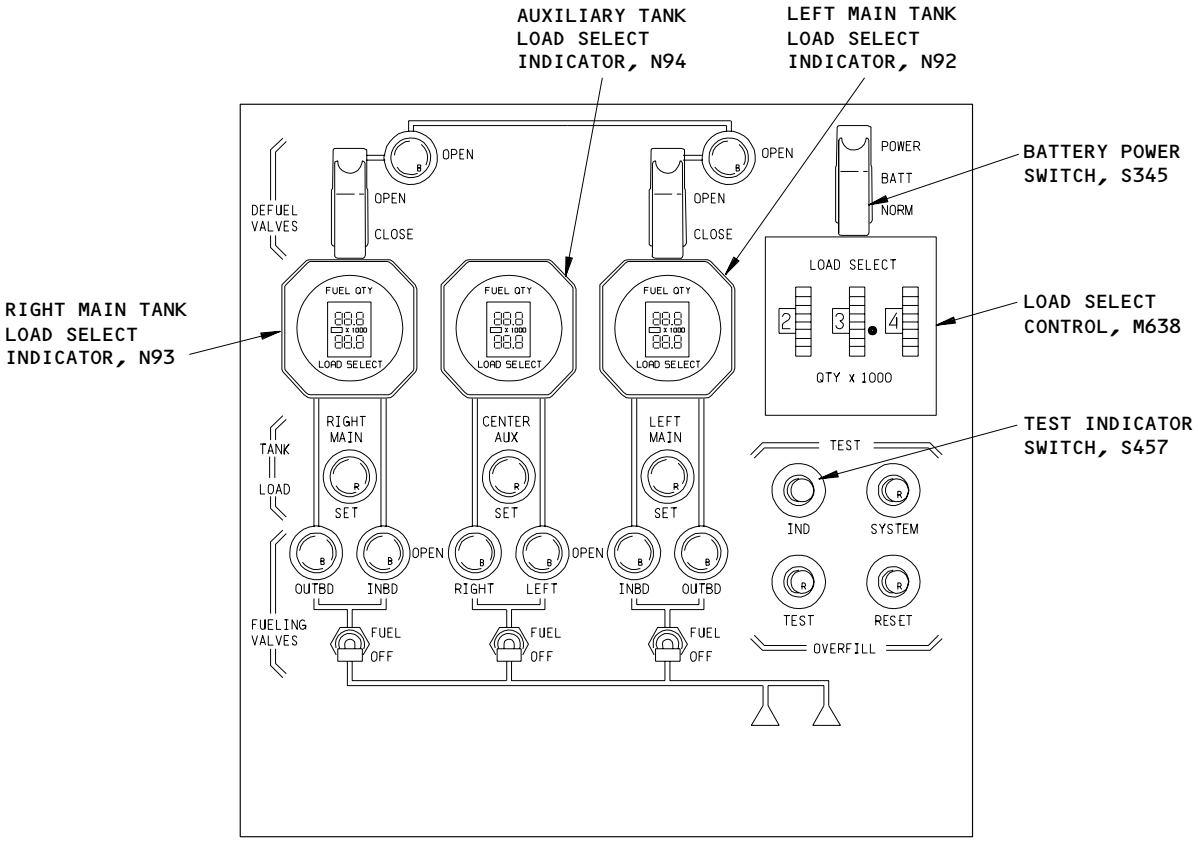

FUELING CONTROL PANEL, P28

F

Fuel Quantity Indicating System - Component Location
Figure 102 (Sheet 4)

BOEING PROPRIETARY - Copyright (C) - Unpublished Work - See title page for details.

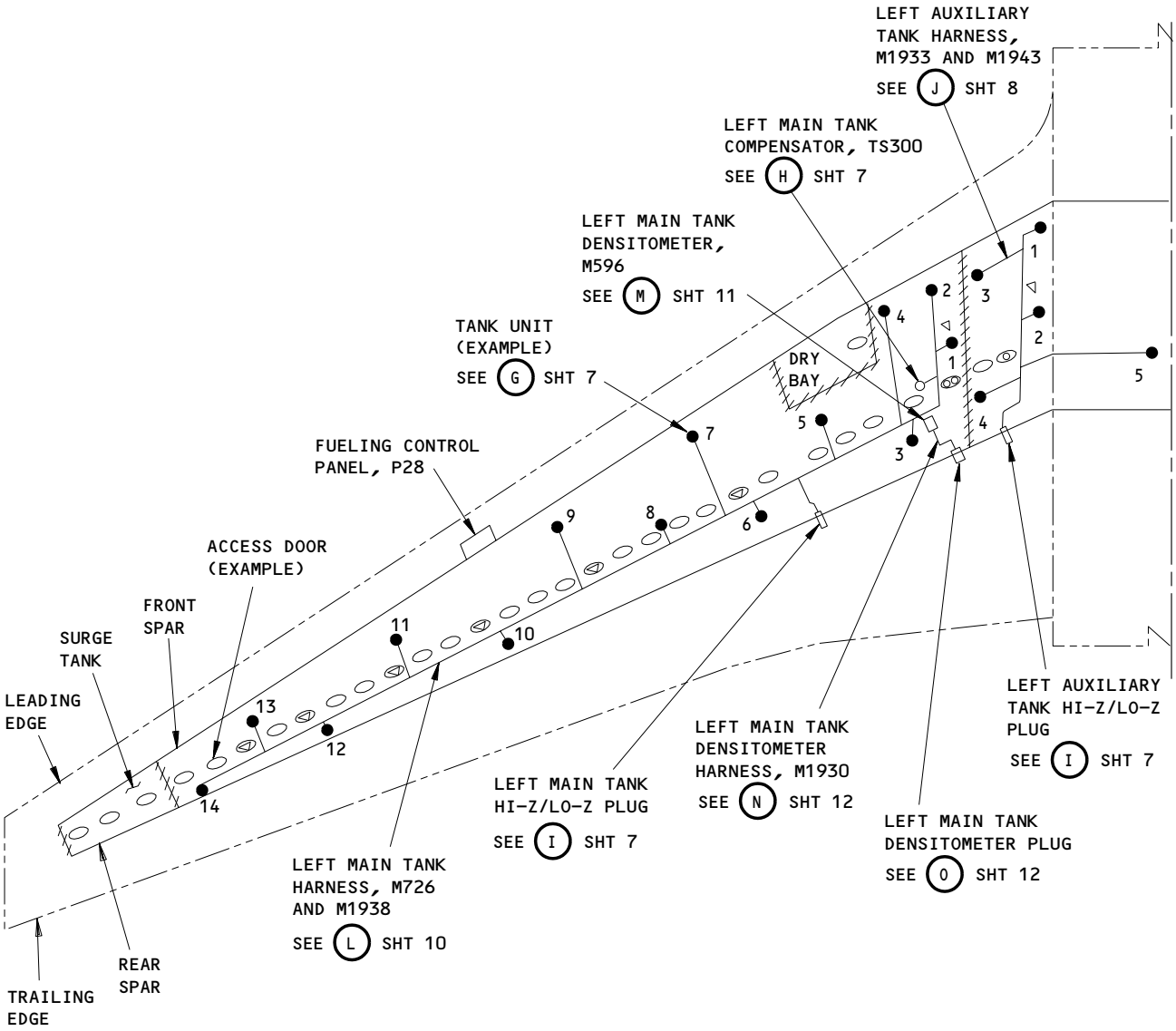

LEFT WING

Fuel Quantity Indicating System - Component Location
Figure 102 (Sheet 5)

BOEING PROPRIETARY - Copyright (C) - Unpublished Work - See title page for details.

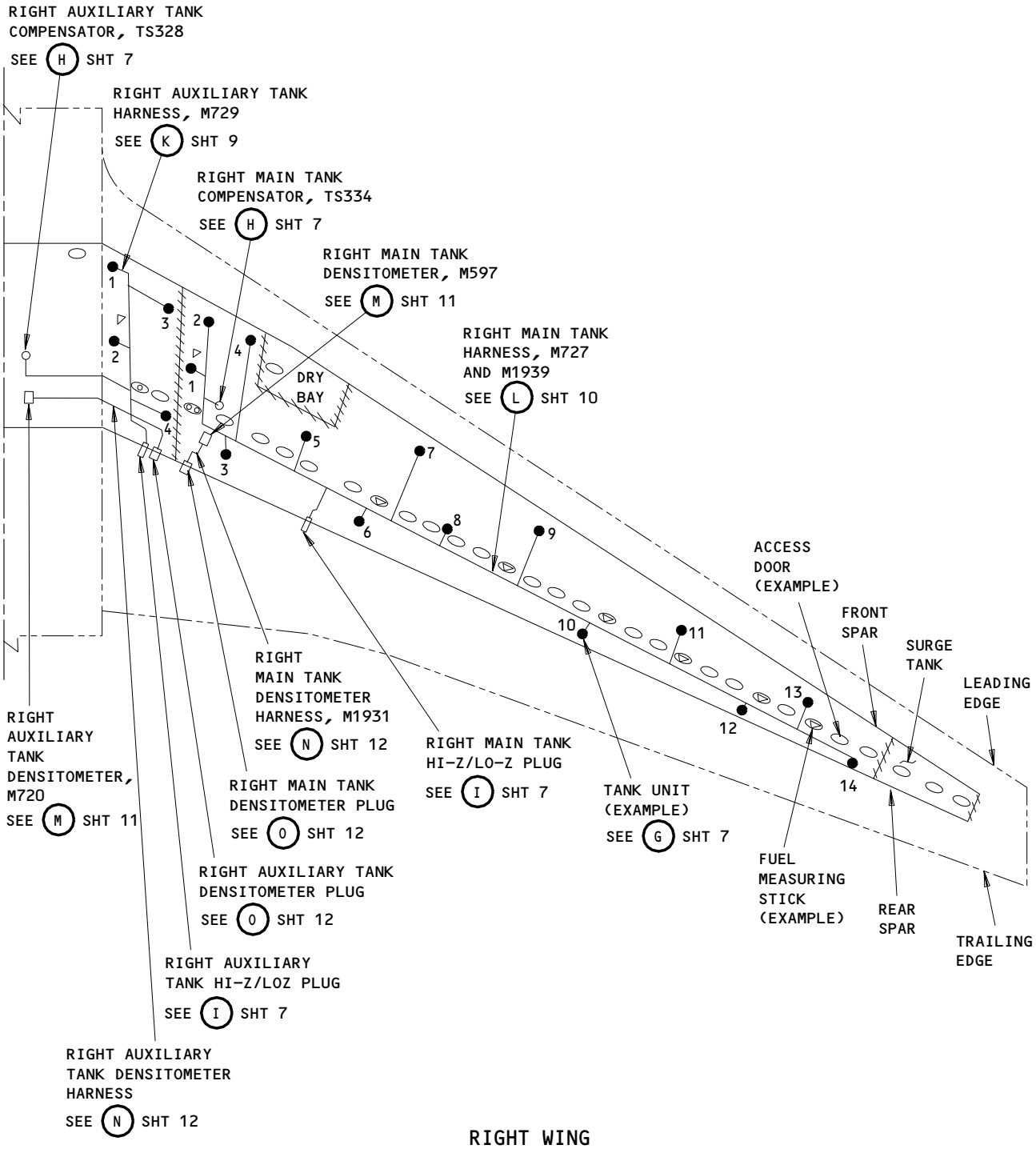

RIGHT WING

Fuel Quantity Indicating System - Component Location
Figure 102 (Sheet 6)

BOEING PROPRIETARY - Copyright (C) - Unpublished Work - See title page for details.

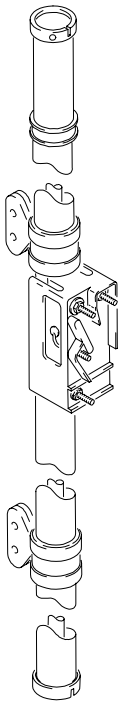

TANK UNIT INSTALLATION (EXAMPLE)
(14 TANK UNITS IN EACH MAIN TANK;
9 TANK UNITS IN THE AUXILIARY TANK)

G

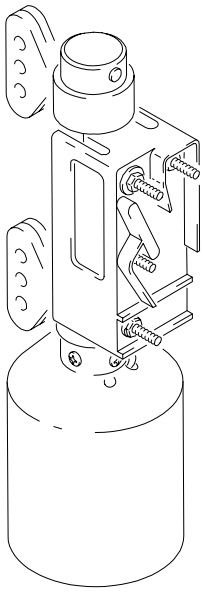

LEFT MAIN TANK COMPENSATOR, TS300
RIGHT AUXILIARY TANK COMPENSATOR, TS328
RIGHT MAIN TANK COMPENSATOR, TS334

H

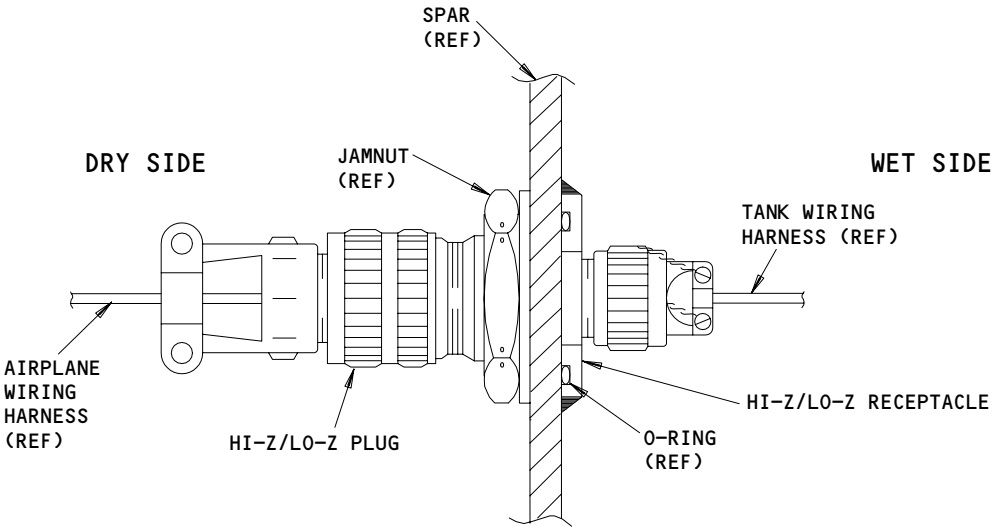

HI-Z/LO-Z CONNECTOR

I

Fuel Quantity Indicating System - Component Location (Details from Shts 5 and 6)
Figure 102 (Sheet 7)

BOEING PROPRIETARY - Copyright (C) - Unpublished Work - See title page for details.

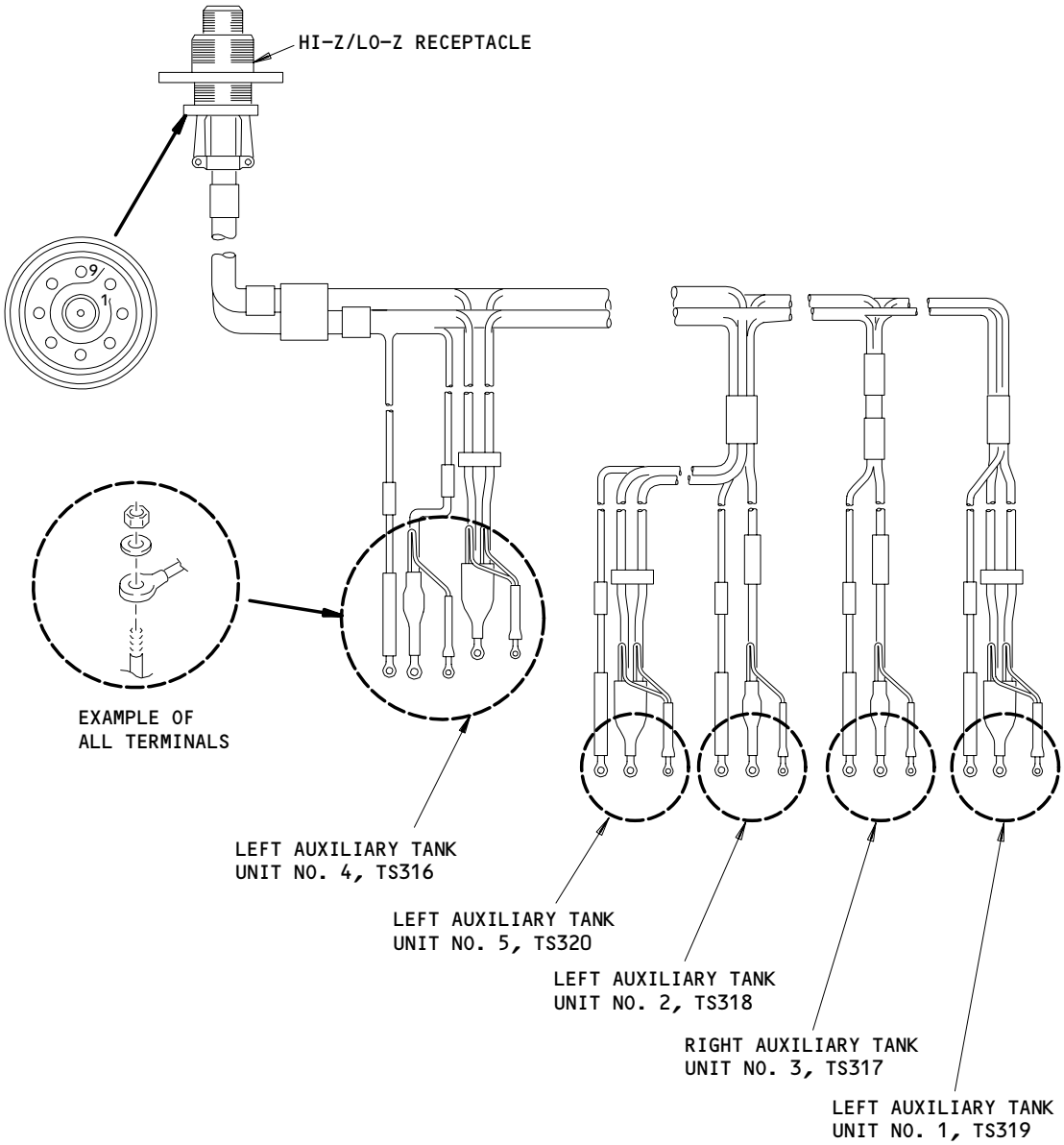

LEFT AUXILIARY TANK WIRING HARNESS, M1934 AND M1943

J

Fuel Quantity Indicating System - Component Location (Detail from Sht 5)
Figure 102 (Sheet 8)

BOEING PROPRIETARY - Copyright (C) - Unpublished Work - See title page for details.

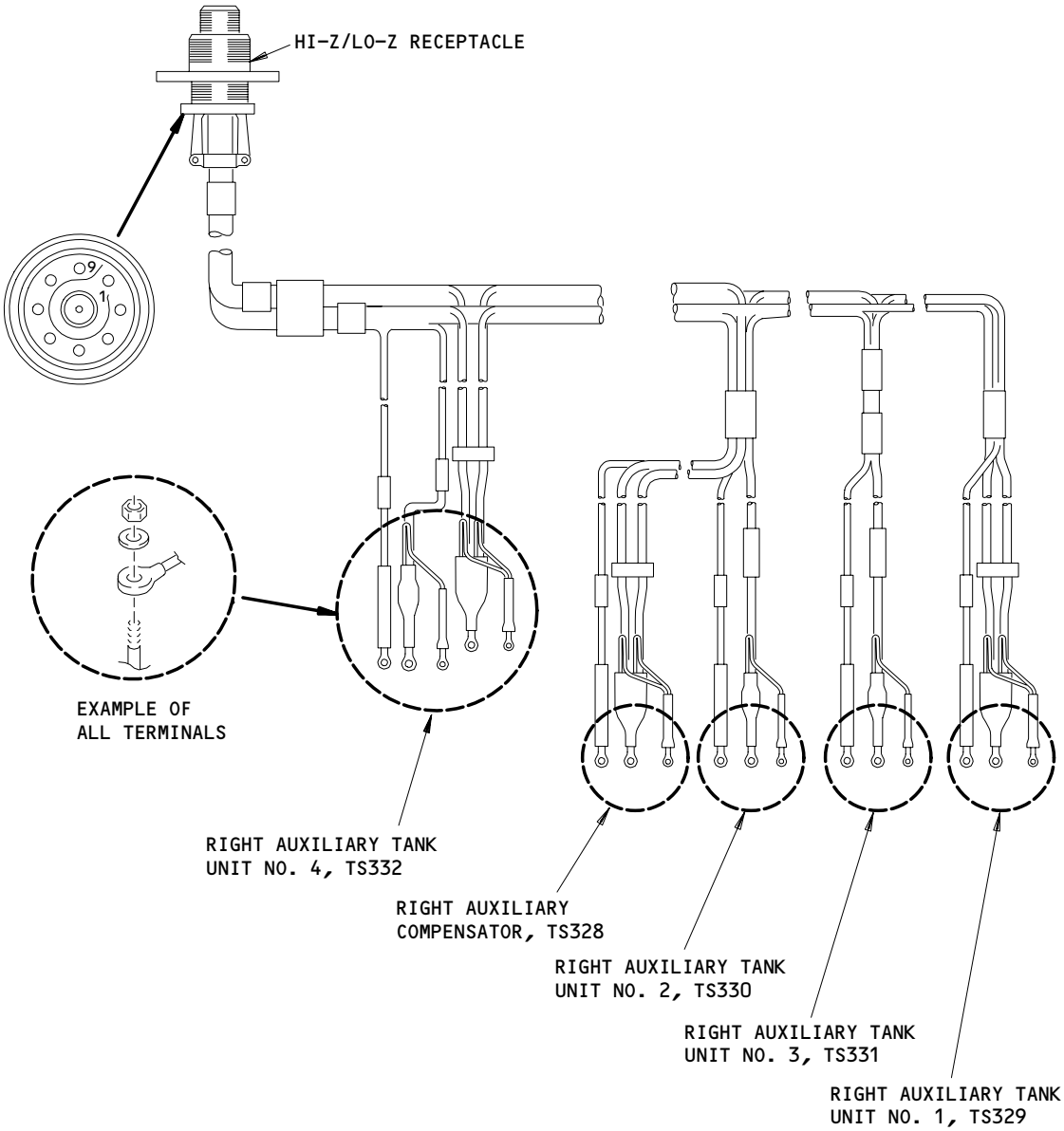

RIGHT AUXILIARY TANK WIRING HARNESS, M1935 AND M1942

(K)

Fuel Quantity Indicating System - Component Location (Detail from Sht 6)
Figure 102 (Sheet 9)

BOEING PROPRIETARY - Copyright (C) - Unpublished Work - See title page for details.

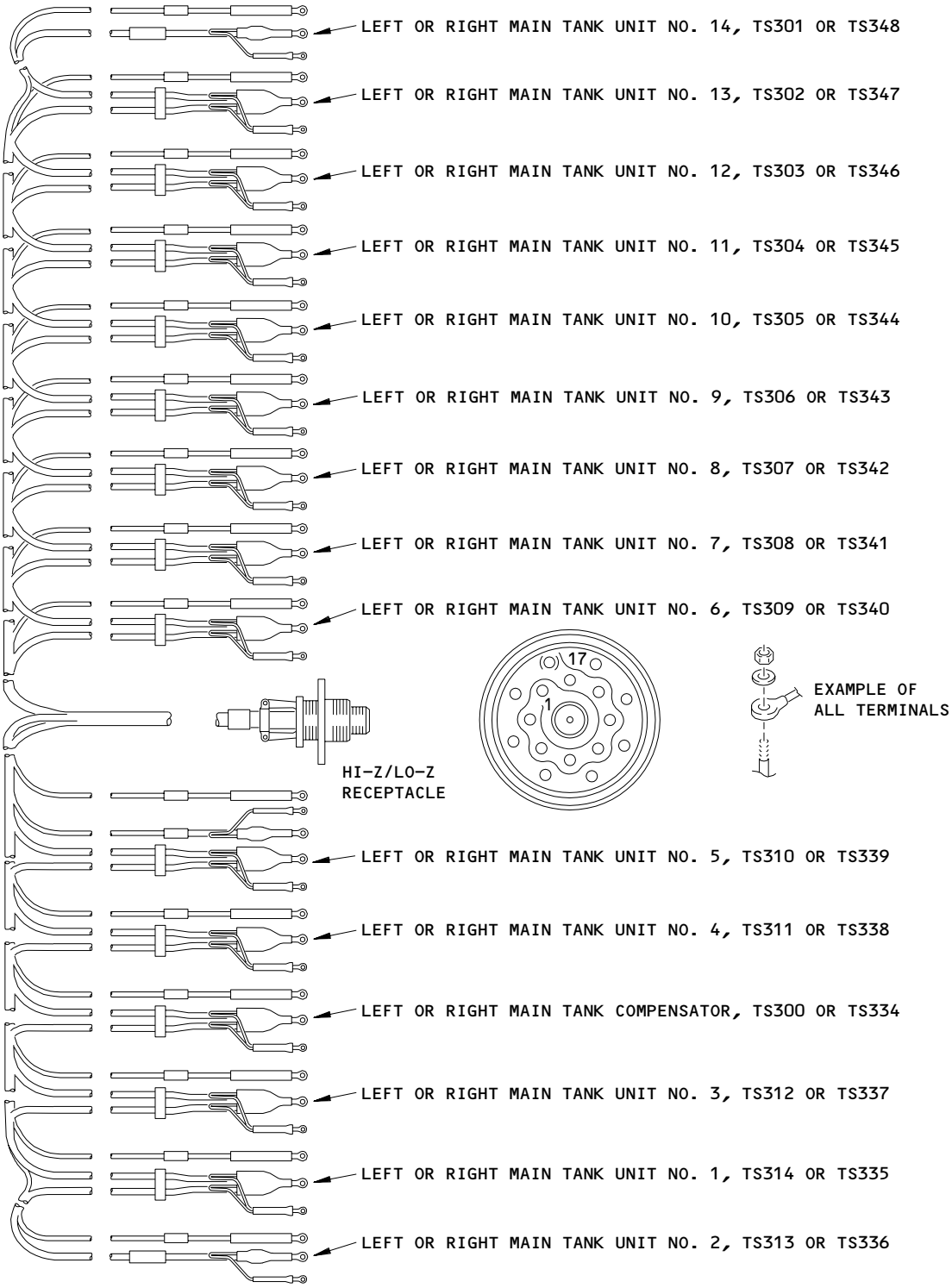

Fuel Quantity Indicating System - Component Location (Detail from Shts 5 and 6)
Figure 102 (Sheet 10)

BOEING PROPRIETARY - Copyright (C) - Unpublished Work - See title page for details.

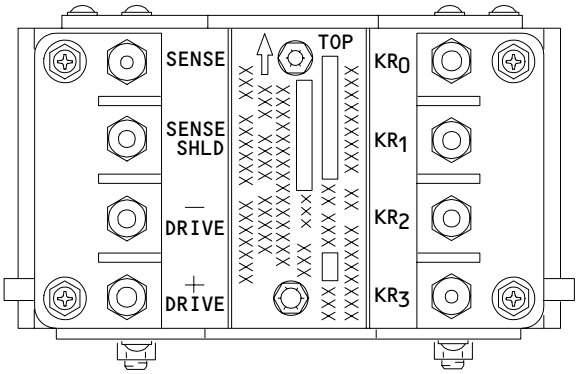

FRONT VIEW

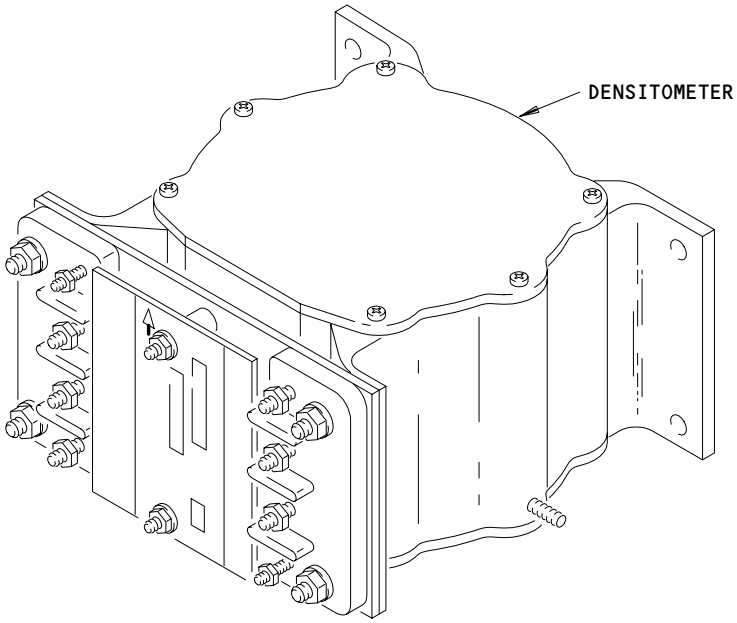

LEFT MAIN, RIGHT AUXILIARY OR RIGHT MAIN TANK DENSITOMETER, M596,M720 OR M597

M

Fuel Quantity Indicating System - Component Location (Detail from Shts 5 and 6)
Figure 102 (Sheet 11)

BOEING PROPRIETARY - Copyright (C) - Unpublished Work - See title page for details.

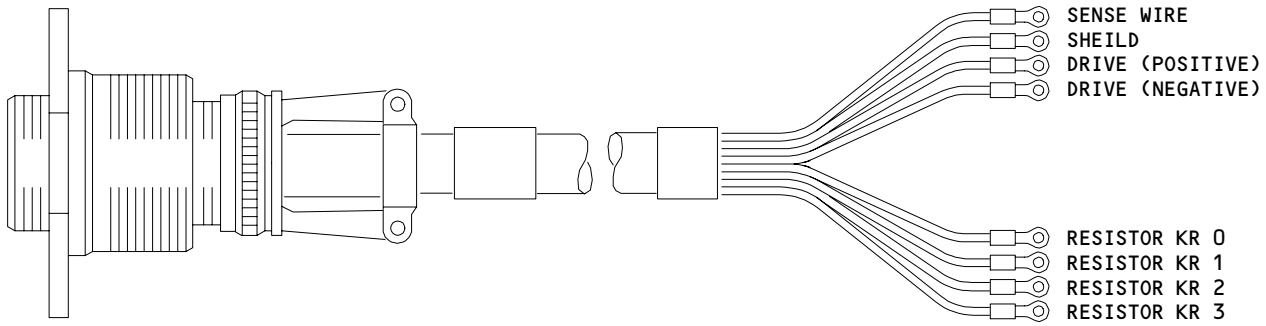

LEFT MAIN, RIGHT MAIN OR RIGHT AUXILIARY DENSITOMETER TANK WIRING HARNESS, M1930,M1931 OR M1937

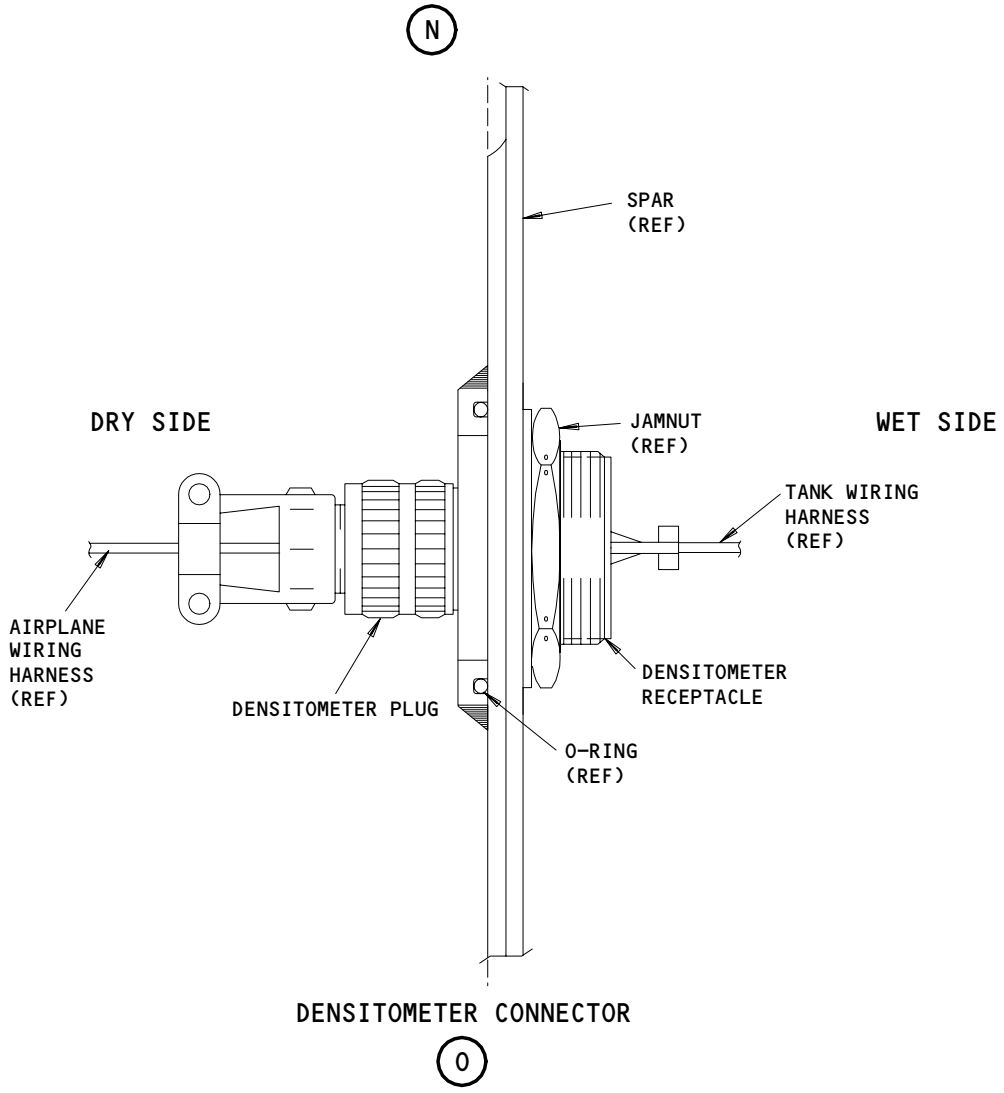

Fuel Quantity Indicating System - Component Location (Details from Shts 5 and 6)
Figure 102 (Sheet 12)

BOEING PROPRIETARY - Copyright (C) - Unpublished Work - See title page for details.

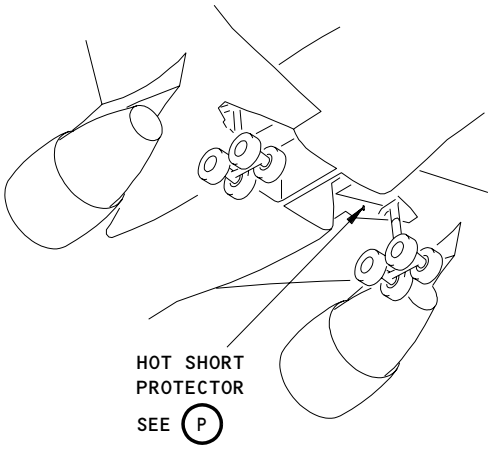

MAIN LANDING GEAR
WHEEL WELL

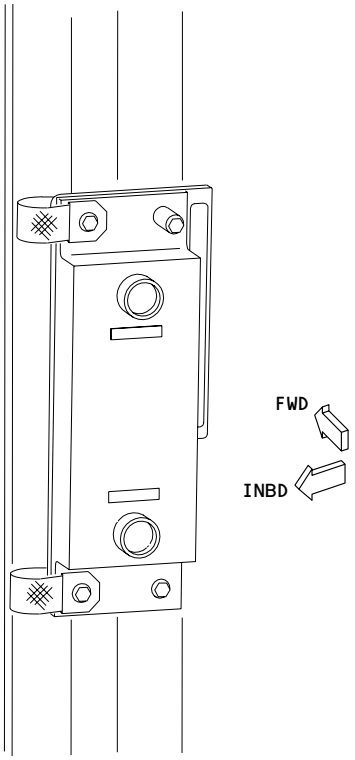

HOT SHORT PROTECTOR
P

Fuel Quantity Indicating System - Component Location
Figure 102 (Sheet 13)

BOEING PROPRIETARY - Copyright (C) - Unpublished Work - See title page for details.

FUEL QUANTITY INDICATING SYSTEM (FQIS) - ADJUSTMENT/TEST

1. General
   A. This procedure has these tasks:
      (1) Operational test of the fuel quantity indicating system (FQIS).
      (2) Comparison check of the the fuel quantity indicating system (FQIS) with the fuel measuring sticks.
      (3) FQIS Capacitance Test
      (4) FQIS Insulation Resistance Test
      (5) Operational Test - Fuel Configuration Warning System
   B. The operational test makes sure the FQIS system operates correctly.
   C. The comparison check makes sure the fuel quantity shown agrees with the correct quantity of fuel in the fuel tanks.
   D. The FQIS Capacitance Test makes sure the capacitance values for the tank units and the compensators are in the permitted limits for FQIS precision.
   E. The FQIS Insulation Resistance Test gives insulation resistance measurements for the wiring between the fuel quantity processor unit (FQPU) and the equipment in the tank.

TASK 28-41-00-715-001-001

2. Operational Test - Fuel Quantity Indicating System (Fig. 501, 502, and 503)
   A. General
      (1) This procedure contains:
         (a) A check of the load select indicators on the fueling control panel, P28.
         (b) A check of the flight deck indicators.
         (c) A fuel quantity BITE procedure at the FQIS processor.
   B. Equipment
      (1) E/E Access Hatch Safety Barrier - A53002-5
   C. References
      (1) AMM 06-41-00/201, Fuselage Access Doors and Panels
      (2) AMM 06-44-00/201, Wings Access Doors and Panels
      (3) AMM 24-22-00/201, Electric Power Control
   D. Access
      (1) Location Zones
         119 Main Equipment Center (Left and Right)
         521 Leading Edge to Front Spar (Left)

      (2) Access Panels
         119AL Electronics Access Door
         521QB Fueling Station Door (Left)

   E. Prepare for Checks

      S 865-002-001
      (1) Supply electrical power (AMM 24-22-00/201).
   F. Check of the Load Select Indicators (Fig. 501)

      S 015-003-001
      (1) Open the fueling station door, 521QB (AMM 06-44-00/201).

BOEING PROPRIETARY - Copyright (C) - Unpublished Work - See title page for details.

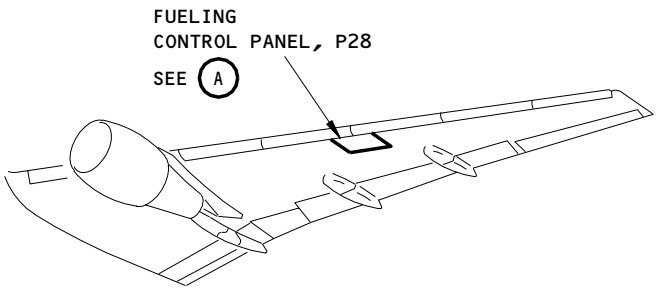

LEFT WING

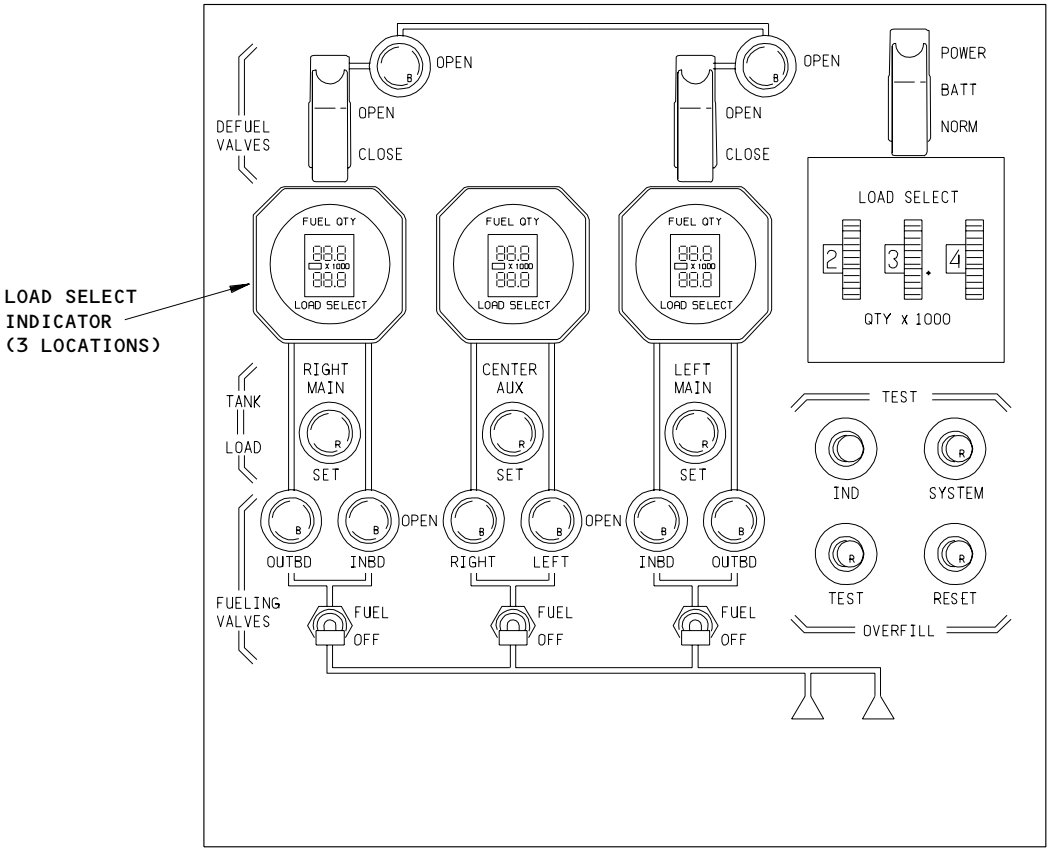

FUELING CONTROL PANEL, P28

A

Fueling Control Panel
Figure 501

BOEING PROPRIETARY - Copyright (C) - Unpublished Work - See title page for details.

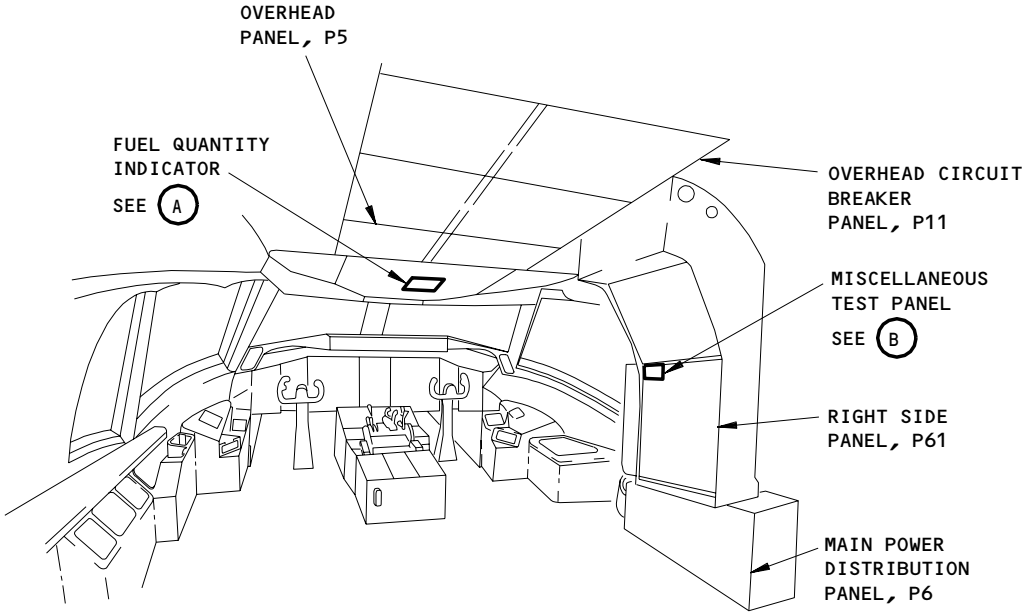

FLIGHT COMPARTMENT

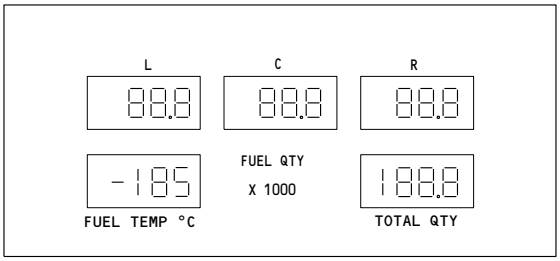

FUEL QUANTITY INDICATOR

A

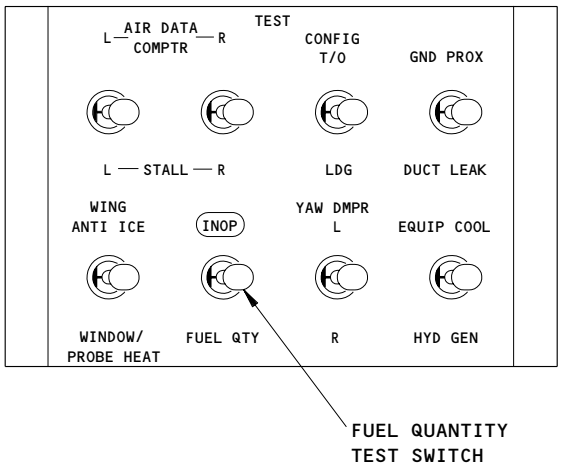

MISCELLANEOUS TEST PANEL
(EXAMPLE)

B

Fuel Quantity Indicator
Figure 502

BOEING PROPRIETARY - Copyright (C) - Unpublished Work - See title page for details.

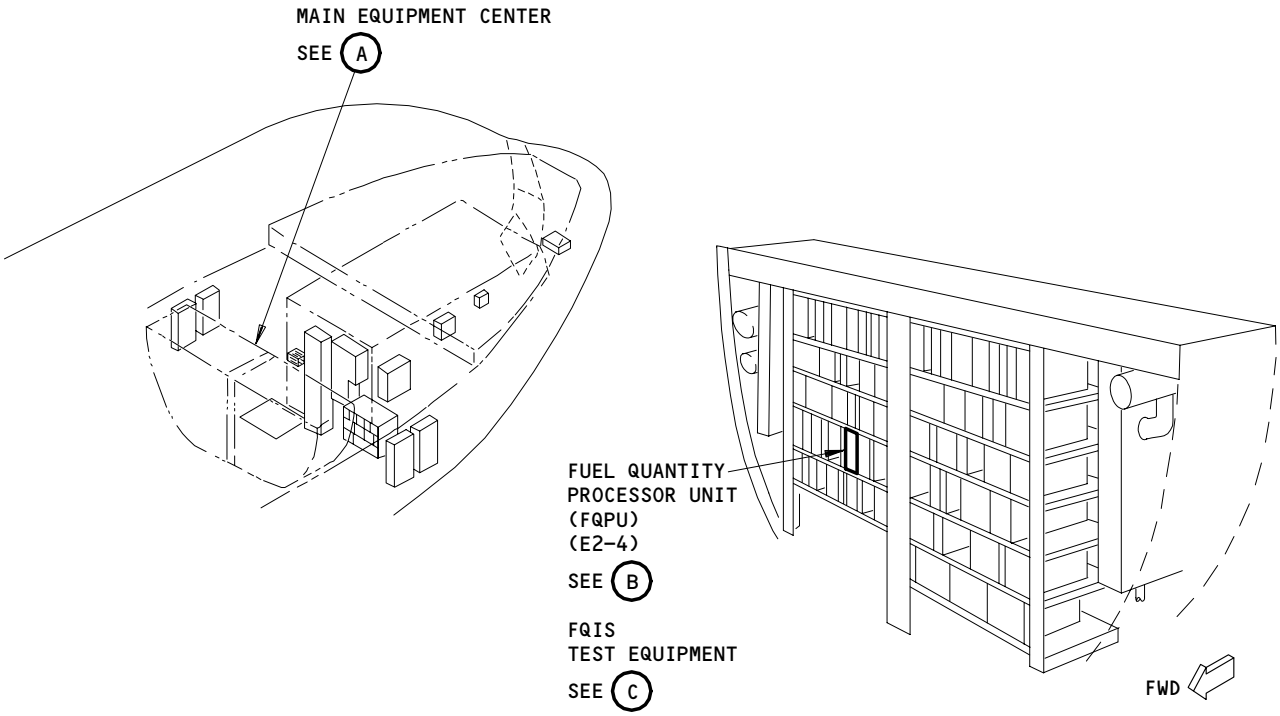

MAIN EQUIPMENT CENTER

A

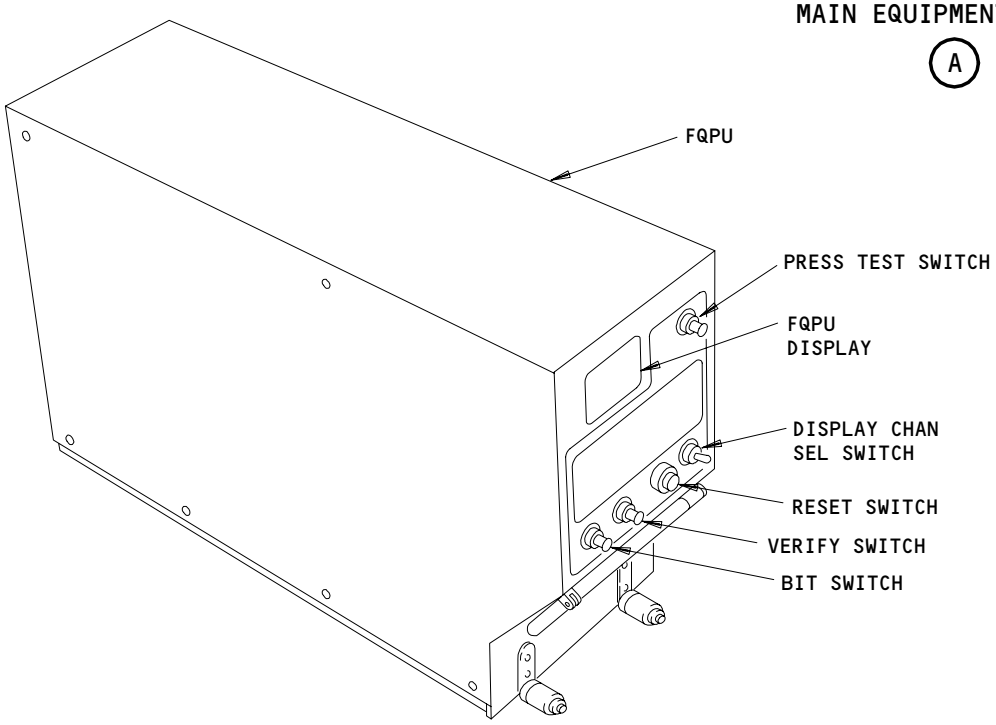

FQPU

B

FQIS Test Equipment
Figure 503 (Sheet 1)

BOEING PROPRIETARY - Copyright (C) - Unpublished Work - See title page for details.

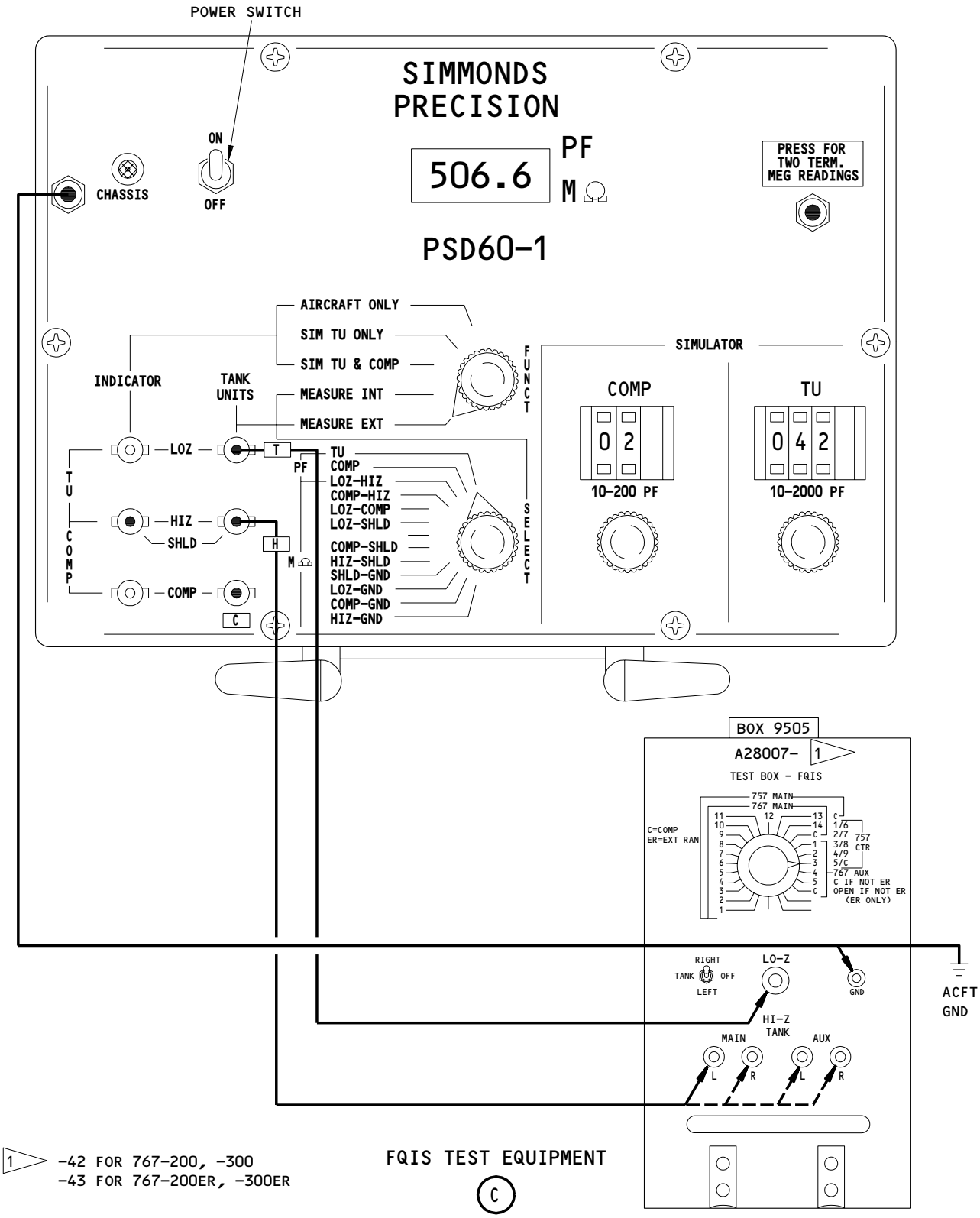

1 -42 FOR 767-200, -300
-43 FOR 767-200ER, -300ER

FQIS TEST EQUIPMENT

C

FQIS Test Equipment
Figure 503 (Sheet 2)

EFFECTIVITY
SAS 050, 051, 151-157, 162-167;
MTH 275-278, 280

F18917

BOEING PROPRIETARY - Copyright (C) - Unpublished Work - See title page for details.

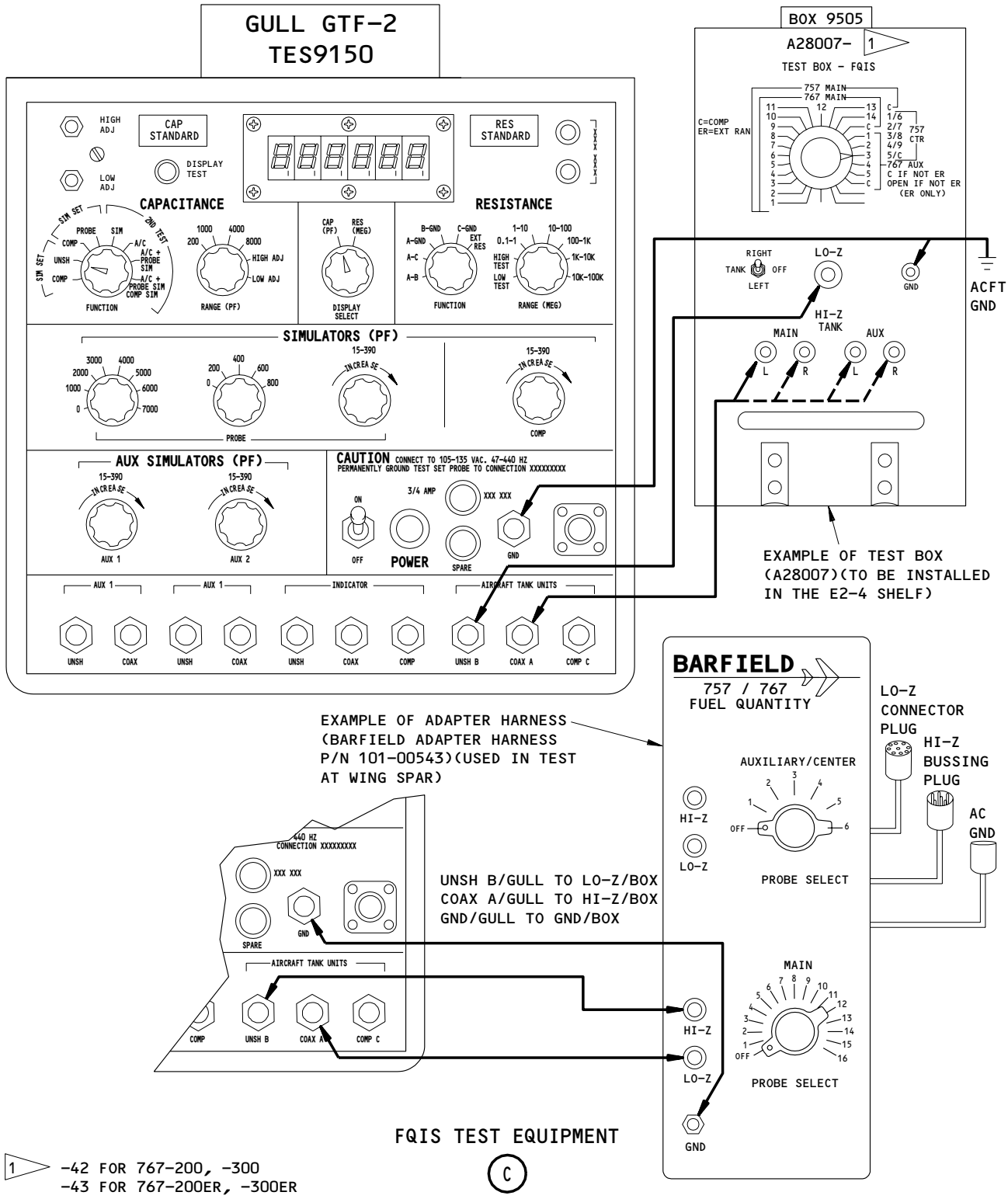

FQIS TEST EQUIPMENT

C

1 -42 FOR 767-200, -300
-43 FOR 767-200ER, -300ER

FQIS Test Equipment
Figure 503 (Sheet 3)

BOEING PROPRIETARY - Copyright (C) - Unpublished Work - See title page for details.

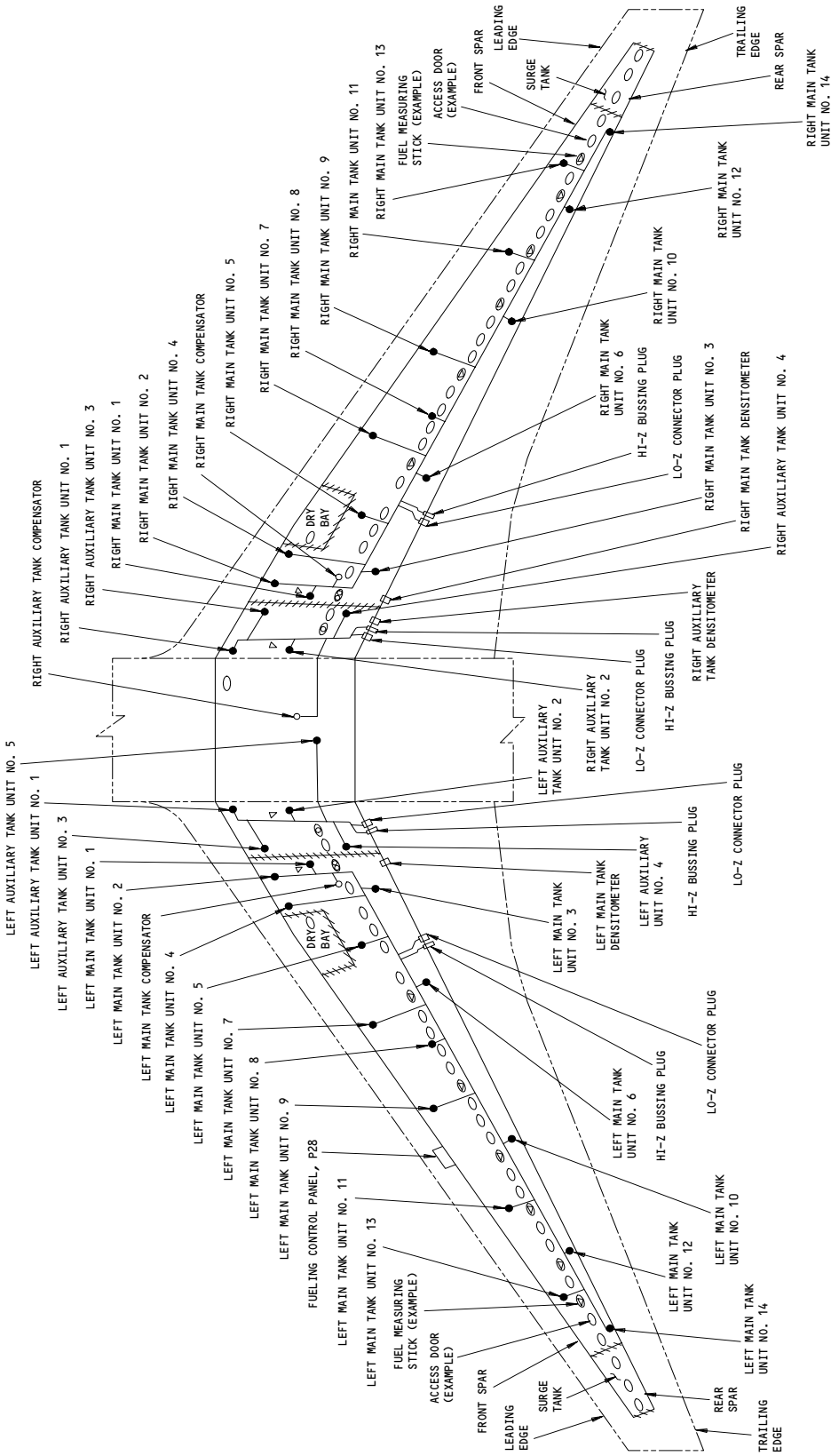

Fuel Quantity Indicating System (FQIS)
Figure 504

BOEING PROPRIETARY - Copyright (C) - Unpublished Work - See title page for details.

WIRING FAULT CODE	TANK UNIT OR COMPENSATOR UNDER TEST	CAPACITANCE			EQUIP. NO.
		MIN (pF)	MAX (pF)	MEASURED (pF)	
51	L MAIN TANK UNIT NO. 1	226.1	229.5		TS314
52	L MAIN TANK UNIT NO. 2	198.6	202.5		TS313
53	L MAIN TANK UNIT NO. 3	164.2	166.9		TS312
54	L MAIN TANK UNIT NO. 4	144.6	147.7		TS311
55	L MAIN TANK UNIT NO. 5	146.7	149.1		TS310
56	L MAIN TANK UNIT NO. 6	108.5	110.8		TS309
57	L MAIN TANK UNIT NO. 7	99.6	101.7		TS308
58	L MAIN TANK UNIT NO. 8	99.6	101.7		TS307
59	L MAIN TANK UNIT NO. 9	88.7	91.1		TS306
60	L MAIN TANK UNIT NO. 10	72.8	74.5		TS305
61	L MAIN TANK UNIT NO. 11	79.2	80.9		TS304
62	L MAIN TANK UNIT NO. 12	60.6	62.1		TS303
63	L MAIN TANK UNIT NO. 13	48.2	59.1		TS302
64	L MAIN TANK UNIT NO. 14	32.0	42.8		TS301
71	L AUX TANK UNIT NO. 1	276.5	286.7		TS319
72	L AUX TANK UNIT NO. 2	280.0	284.1		TS318
73	L AUX TANK UNIT NO. 3	222.8	231.8		TS317
74	L AUX TANK UNIT NO. 4	191.9	195.1		TS316
75	R AUX TANK UNIT NO. 1	276.5	286.7		TS329
76	R AUX TANK UNIT NO. 2	280.0	284.1		TS330
77	R AUX TANK UNIT NO. 3	222.8	231.8		TS331
78	R AUX TANK UNIT NO. 4	191.9	195.1		TS332
79	L AUX TANK UNIT NO. 5	226.1	229.5		TS320
81	R MAIN TANK UNIT NO. 1	226.1	229.5		TS335
82	R MAIN TANK UNIT NO. 2	198.6	202.5		TS336
83	R MAIN TANK UNIT NO. 3	164.2	166.9		TS337
84	R MAIN TANK UNIT NO. 4	144.6	147.7		TS338
85	R MAIN TANK UNIT NO. 5	146.7	149.1		TS339
86	R MAIN TANK UNIT NO. 6	108.5	110.8		TS340
87	R MAIN TANK UNIT NO. 7	99.6	101.7		TS341
88	R MAIN TANK UNIT NO. 8	99.6	101.7		TS342
89	R MAIN TANK UNIT NO. 9	88.7	91.1		TS343
90	R MAIN TANK UNIT NO. 10	72.8	74.5		TS344
91	R MAIN TANK UNIT NO. 11	79.2	80.9		TS345
92	R MAIN TANK UNIT NO. 12	60.6	62.1		TS346
93	R MAIN TANK UNIT NO. 13	48.2	59.1		TS347
94	R MAIN TANK UNIT NO. 14	32.0	42.8		TS348
C4	L MAIN TANK COMPENSATOR	107.0	109.1		TS300
C5	R AUX TANK COMPENSATOR	107.0	109.1		TS328
C6	R MAIN TANK COMPENSATOR	107.0	109.1		TS334

{pF = PICOFARADS}

Electronic Equipment Bay Capacitance Test at Volumetric Shutoff (Full Tank)
Figure 505

BOEING PROPRIETARY - Copyright (C) - Unpublished Work - See title page for details.

WIRING FAULT CODE	TANK UNIT OR COMPENSATOR UNDER TEST	CAPACITANCE			EQUIP. NO.
		MIN (pF)	MAX (pF)	MEASURED (pF)	
51	L MAIN TANK UNIT NO. 1	225.0	229.5		TS314
52	L MAIN TANK UNIT NO. 2	197.5	202.5		TS313
53	L MAIN TANK UNIT NO. 3	163.0	166.9		TS312
54	L MAIN TANK UNIT NO. 4	143.5	147.7		TS311
55	L MAIN TANK UNIT NO. 5	145.5	149.1		TS310
56	L MAIN TANK UNIT NO. 6	107.5	110.8		TS309
57	L MAIN TANK UNIT NO. 7	98.5	101.7		TS308
58	L MAIN TANK UNIT NO. 8	98.5	101.7		TS307
59	L MAIN TANK UNIT NO. 9	87.5	91.1		TS306
60	L MAIN TANK UNIT NO. 10	71.5	74.5		TS305
61	L MAIN TANK UNIT NO. 11	78.0	80.9		TS304
62	L MAIN TANK UNIT NO. 12	59.5	62.1		TS303
63	L MAIN TANK UNIT NO. 13	47.0	59.1		TS302
64	L MAIN TANK UNIT NO. 14	31.0	42.8		TS301
71	L AUX TANK UNIT NO. 1	275.0	286.7		TS319
72	L AUX TANK UNIT NO. 2	278.0	284.1		TS318
73	L AUX TANK UNIT NO. 3	221.0	231.8		TS317
74	L AUX TANK UNIT NO. 4	190.0	195.1		TS316
75	R AUX TANK UNIT NO. 1	275.0	286.7		TS329
76	R AUX TANK UNIT NO. 2	278.0	284.1		TS330
77	R AUX TANK UNIT NO. 3	221.0	231.8		TS331
78	R AUX TANK UNIT NO. 4	190.0	195.1		TS332
79	L AUX TANK UNIT NO. 5	225.0	229.5		TS320
81	R MAIN TANK UNIT NO. 1	225.0	229.5		TS335
82	R MAIN TANK UNIT NO. 2	197.5	202.5		TS336
83	R MAIN TANK UNIT NO. 3	163.0	166.9		TS337
84	R MAIN TANK UNIT NO. 4	143.5	147.7		TS338
85	R MAIN TANK UNIT NO. 5	145.5	149.1		TS339
86	R MAIN TANK UNIT NO. 6	107.5	110.8		TS340
87	R MAIN TANK UNIT NO. 7	98.5	101.7		TS341
88	R MAIN TANK UNIT NO. 8	98.5	101.7		TS342
89	R MAIN TANK UNIT NO. 9	87.5	91.1		TS343
90	R MAIN TANK UNIT NO. 10	71.5	74.5		TS344
91	R MAIN TANK UNIT NO. 11	78.0	80.9		TS345
92	R MAIN TANK UNIT NO. 12	59.5	62.1		TS346
93	R MAIN TANK UNIT NO. 13	47.0	59.1		TS347
94	R MAIN TANK UNIT NO. 14	31.0	42.8		TS348
C4	L MAIN TANK COMPENSATOR	106.0	109.1		TS300
C5	R AUX TANK COMPENSATOR	106.0	109.1		TS328
C6	R MAIN TANK COMPENSATOR	106.0	109.1		TS334

{pF = PICOFARADS}

Wing Spar Capacitance Test at Volumetric Shutoff (Full Tank)
Figure 506

BOEING PROPRIETARY - Copyright (C) - Unpublished Work - See title page for details.

WIRING FAULT CODE	TANK UNIT OR COMPENSATOR UNDER TEST	CAPACITANCE			EQUIP. NO.
		MIN (pF)	MAX (pF)	MEASURED (pF)	
51	L MAIN TANK UNIT NO. 1	105.9	107.3		TS314
52	L MAIN TANK UNIT NO. 2	93.9	95.1		TS313
53	L MAIN TANK UNIT NO. 3	77.2	78.1		TS312
54	L MAIN TANK UNIT NO. 4	70.1	71.3		TS311
55	L MAIN TANK UNIT NO. 5	69.0	69.9		TS310
56	L MAIN TANK UNIT NO. 6	51.3	52.2		TS309
57	L MAIN TANK UNIT NO. 7	47.0	48.0		TS308
58	L MAIN TANK UNIT NO. 8	46.9	47.8		TS307
59	L MAIN TANK UNIT NO. 9	42.1	43.3		TS306
60	L MAIN TANK UNIT NO. 10	34.4	35.3		TS305
61	L MAIN TANK UNIT NO. 11	37.4	38.5		TS304
62	L MAIN TANK UNIT NO. 12	28.7	29.7		TS303
63	L MAIN TANK UNIT NO. 13	30.9	32.0		TS302
64	L MAIN TANK UNIT NO. 14	24.1	25.1		TS301
71	L AUX TANK UNIT NO. 1	134.7	135.9		TS319
72	L AUX TANK UNIT NO. 2	131.5	132.6		TS318
73	L AUX TANK UNIT NO. 3	110.5	111.5		TS317
74	L AUX TANK UNIT NO. 4	92.1	93.1		TS316
75	R AUX TANK UNIT NO. 1	134.7	135.9		TS329
76	R AUX TANK UNIT NO. 2	131.5	132.6		TS330
77	R AUX TANK UNIT NO. 3	110.5	111.5		TS331
78	R AUX TANK UNIT NO. 4	92.1	93.1		TS332
79	L AUX TANK UNIT NO. 5	105.9	107.4		TS320
81	R MAIN TANK UNIT NO. 1	105.9	107.3		TS335
82	R MAIN TANK UNIT NO. 2	93.9	95.1		TS336
83	R MAIN TANK UNIT NO. 3	77.2	78.1		TS337
84	R MAIN TANK UNIT NO. 4	70.1	71.3		TS338
85	R MAIN TANK UNIT NO. 5	69.0	69.9		TS339
86	R MAIN TANK UNIT NO. 6	51.3	52.2		TS340
87	R MAIN TANK UNIT NO. 7	47.0	48.0		TS341
88	R MAIN TANK UNIT NO. 8	46.9	47.8		TS342
89	R MAIN TANK UNIT NO. 9	42.1	43.3		TS343
90	R MAIN TANK UNIT NO. 10	34.4	35.3		TS344
91	R MAIN TANK UNIT NO. 11	37.4	38.5		TS345
92	R MAIN TANK UNIT NO. 12	28.7	29.7		TS346
93	R MAIN TANK UNIT NO. 13	30.9	32.0		TS347
94	R MAIN TANK UNIT NO. 14	24.1	25.1		TS348
C4	L MAIN TANK COMPENSATOR	50.4	51.3		TS300
C5	R AUX TANK COMPENSATOR	50.4	51.3		TS328
C6	R MAIN TANK COMPENSATOR	50.4	51.3		TS334

{pF = PICOFARADS}

Electronic Equipment Bay Dry Capacitance Test (No Fuel in the Tank)
Figure 507

BOEING PROPRIETARY - Copyright (C) - Unpublished Work - See title page for details.

WIRING FAULT CODE	TANK UNIT OR COMPENSATOR UNDER TEST	CAPACITANCE			EQUIP. NO.
		MIN (pF)	MAX (pF)	MEASURED (pF)	
51	L MAIN TANK UNIT NO. 1	105.9	107.3		TS314
52	L MAIN TANK UNIT NO. 2	93.9	95.1		TS313
53	L MAIN TANK UNIT NO. 3	77.2	78.1		TS312
54	L MAIN TANK UNIT NO. 4	70.1	71.3		TS311
55	L MAIN TANK UNIT NO. 5	69.0	69.9		TS310
56	L MAIN TANK UNIT NO. 6	51.3	52.2		TS309
57	L MAIN TANK UNIT NO. 7	47.0	48.0		TS308
58	L MAIN TANK UNIT NO. 8	46.9	47.8		TS307
59	L MAIN TANK UNIT NO. 9	42.1	43.3		TS306
60	L MAIN TANK UNIT NO. 10	34.4	35.3		TS305
61	L MAIN TANK UNIT NO. 11	37.4	38.5		TS304
62	L MAIN TANK UNIT NO. 12	28.7	29.7		TS303
63	L MAIN TANK UNIT NO. 13	30.9	32.0		TS302
64	L MAIN TANK UNIT NO. 14	24.1	25.1		TS301
71	L AUX TANK UNIT NO. 1	134.7	135.9		TS319
72	L AUX TANK UNIT NO. 2	131.5	132.6		TS318
73	L AUX TANK UNIT NO. 3	110.5	111.5		TS317
74	L AUX TANK UNIT NO. 4	92.1	93.1		TS316
75	R AUX TANK UNIT NO. 1	134.7	135.9		TS329
76	R AUX TANK UNIT NO. 2	131.5	132.6		TS330
77	R AUX TANK UNIT NO. 3	110.5	111.5		TS331
78	R AUX TANK UNIT NO. 4	92.1	93.1		TS332
79	L AUX TANK UNIT NO. 5	105.9	107.4		TS320
81	R MAIN TANK UNIT NO. 1	105.9	107.3		TS335
82	R MAIN TANK UNIT NO. 2	93.9	95.1		TS336
83	R MAIN TANK UNIT NO. 3	77.2	78.1		TS337
84	R MAIN TANK UNIT NO. 4	70.1	71.3		TS338
85	R MAIN TANK UNIT NO. 5	69.0	69.9		TS339
86	R MAIN TANK UNIT NO. 6	51.3	52.2		TS340
87	R MAIN TANK UNIT NO. 7	47.0	48.0		TS341
88	R MAIN TANK UNIT NO. 8	46.9	47.8		TS342
89	R MAIN TANK UNIT NO. 9	42.1	43.3		TS343
90	R MAIN TANK UNIT NO. 10	34.4	35.3		TS344
91	R MAIN TANK UNIT NO. 11	37.4	38.5		TS345
92	R MAIN TANK UNIT NO. 12	28.7	29.7		TS346
93	R MAIN TANK UNIT NO. 13	30.9	32.0		TS347
94	R MAIN TANK UNIT NO. 14	24.1	25.1		TS348
C4	L MAIN TANK COMPENSATOR	50.4	51.3		TS300
C5	R AUX TANK COMPENSATOR	50.4	51.3		TS328
C6	R MAIN TANK COMPENSATOR	50.4	51.3		TS334

{pF = PICOFARADS}

Wing Spar Dry Capacitance Test (No Fuel in the Tank)
Figure 508

BOEING PROPRIETARY - Copyright (C) - Unpublished Work - See title page for details.

MEASUREMENT TANK UNIT	LO-Z TO HI-Z	LO-Z TO SHLD	LO-Z TO GND	HI-Z TO GND	HI-Z TO SHLD	SHLD TO GND
L MAIN TANK UNIT NO. 1						
L MAIN TANK UNIT NO. 2						
L MAIN TANK UNIT NO. 3						
L MAIN TANK UNIT NO. 4						
L MAIN TANK UNIT NO. 5						
L MAIN TANK UNIT NO. 6						
L MAIN TANK UNIT NO. 7						
L MAIN TANK UNIT NO. 8						
L MAIN TANK UNIT NO. 9						
L MAIN TANK UNIT NO. 10						
L MAIN TANK UNIT NO. 11						
L MAIN TANK UNIT NO. 12						
L MAIN TANK UNIT NO. 13						
L MAIN TANK UNIT NO. 14						
COMPENSATOR						

Insulation Resistance Values for the Left Main Tank Wiring
Figure 509

BOEING PROPRIETARY - Copyright (C) - Unpublished Work - See title page for details.

MEASUREMENT TANK UNIT	LO-Z TO HI-Z	LO-Z TO SHLD	LO-Z TO GND	HI-Z TO GND	HI-Z TO SHLD	SHLD TO GND
L AUX TANK UNIT NO. 1						
L AUX TANK UNIT NO. 2						
L AUX TANK UNIT NO. 3						
L AUX TANK UNIT NO. 4						
R AUX TANK UNIT NO. 1						
R AUX TANK UNIT NO. 2						
R AUX TANK UNIT NO. 3						
R AUX TANK UNIT NO. 4						
L AUX TANK UNIT NO. 5						
R AUX COMPENSATOR						

Insulation Resistance Values for the Left and Right Auxiliary Tank Wiring
Figure 510

BOEING PROPRIETARY - Copyright (C) - Unpublished Work - See title page for details.

MEASUREMENT TANK UNIT	LO-Z TO HI-Z	LO-Z TO SHLD	LO-Z TO GND	HI-Z TO GND	HI-Z TO SHLD	SHLD TO GND
R MAIN TANK UNIT NO. 1						
R MAIN TANK UNIT NO. 2						
R MAIN TANK UNIT NO. 3						
R MAIN TANK UNIT NO. 4						
R MAIN TANK UNIT NO. 5						
R MAIN TANK UNIT NO. 6						
R MAIN TANK UNIT NO. 7						
R MAIN TANK UNIT NO. 8						
R MAIN TANK UNIT NO. 9						
R MAIN TANK UNIT NO. 10						
R MAIN TANK UNIT NO. 11						
R MAIN TANK UNIT NO. 12						
R MAIN TANK UNIT NO. 13						
R MAIN TANK UNIT NO. 14						
COMPENSATOR						

Insulation Resistance Values for the Right Main Tank Wiring
Figure 511

BOEING PROPRIETARY - Copyright (C) - Unpublished Work - See title page for details.

S 215-005-001
(2) Make sure the fueling panel light comes on.

S 865-006-001
(3) Push and hold the TEST IND switch on the fueling control panel.

S 215-007-001
(4) Make sure the upper and lower displays on all the load select indicators show 88.8.

S 865-008-001
(5) Release the TEST IND switch.

S 215-009-001
(6) Make sure the lower display on each load select indicator goes back to its blank condition.

S 215-010-001
(7) Make sure the upper display on each load select indicator shows the quantity of fuel in each fuel tank.

S 415-011-001
(8) Close the fueling station door, 521QB (AMM 06-44-00/201).

S 865-013-001
(9) Remove electrical power, if it is not necesssary (AMM 24-22-00/201).

G. Check of the Flight Deck Indicators (Fig. 502)

S 215-014-001
(1) Make sure the six EICAS circuit breakers are closed.

S 865-015-001
(2) Push the ECS MSG switch on the EICAS MAINT panel on the right side panel, P61.

S 215-016-001
(3) Make sure the EICAS maintenance message, FUEL QTY BITE, does not show on the bottom display.

BOEING PROPRIETARY - Copyright (C) - Unpublished Work - See title page for details.

S 865-171-001
(4) Push the STATUS switch on the EICAS display select panel (found on top of the aisle stand).

S 215-017-001
(5) Push and hold the FUEL QTY test switch on the right side panel, P61, in the FUEL QTY position and do the steps that follow:

NOTE: To prevent the nuisance fault codes and the nuisance status codes, do not push the VERIFY switch on the FQIS processor and do not operate the FUEL QTY test switch on the P61 panel until 45 seconds after these conditions:

Changes in electrical power input
Airplane power-up
FQIS processor power-up
When the fueling station door is opened or closed
Operation of the BATT POWER switch, S345, on the fueling control panel, P28.

If you use the FUEL QTY test switch again, wait a minimum of 45 seconds between each use. Failure to wait 45 seconds can cause nuisance fault codes or nuisance status codes to show on the FQIS processor.

(a) Make sure the fuel quantity indicators on the overhead panel, P5, show 88.8.
(b) Make sure the total fuel quantity indicator on the P5 panel shows 188.8.
(c) Make sure the fuel temperature indicator on the P5 panel shows -185 ±2.
(d) Make sure the FUEL CONFIG light on the P5 panel comes on.
(e) Make sure the EICAS caution message, LOW FUEL, shows on the top display.
(f) Make sure the EICAS status message, FUEL QTY IND, shows on the the bottom display.
(g) Make sure the EICAS status message, FUEL QTY CHANNEL, shows on the bottom display.

S 865-019-001
(6) Release the FUEL QTY test switch in 7 seconds or less.

S 215-020-001
(7) Make sure all the displays go back to their usual condition.

S 865-021-001
(8) After 45 seconds, push and hold the FUEL QTY test switch on the right side panel, P61, in the FUEL QTY position.

BOEING PROPRIETARY - Copyright (C) - Unpublished Work - See title page for details.

S 865-022-001
(9) Push and release the ECS MSG switch on the EICAS MAINT panel on the right side panel, P61.

S 215-023-001
(10) Make sure the EICAS maintenance message, FUEL QTY BITE, shows on the bottom display.

S 865-024-001
(11) Release the FUEL QTY test switch in 7 seconds or less.

S 215-025-001
(12) Make sure all the displays go back to their usual condition.

H. Fuel Quantity BITE Procedure (Fig. 503)

S 415-026-001
(1) Close the fueling station door, 521QB, if it is open (AMM 06-44-00/201).

S 015-028-001

WARNING: MAKE SURE THE ELECTRONICS ACCESS DOOR (119AL) IS IN THE FULL OPEN POSITION. IF THE ELECTRONICS ACCESS DOOR IS NOT IN THE FULL OPEN POSITION, IT CAN ACCIDENTALLY MOVE AND CAUSE INJURY.

(2) Push the electronics access door, 119AL, to the full open position to engage the hold open detent (AMM 06-41-00/201).

S 015-029-001
(3) Go into the main equipment center.

BOEING PROPRIETARY - Copyright (C) - Unpublished Work - See title page for details.

S 095-030-001

(4) Install the E/E Access Hatch Safety Barrier across the opening in the electronics access door.

NOTE: Do not push the RESET switch on the FQIS processor before you make a written record of all fault codes. When you push the RESET switch, it erases all fault codes kept in the FQIS processor memory.

NOTE: PROCESSORS S345T002-41, -42, -43, -46, -47, OR -60;
To prevent nuisance fault codes and nuisance status codes, do not move the DISPLAY CHAN SEL switch on the FQIS processor to the opposite position unless the FQIS processor display is off.

If such a switchover occurs and if you push the VERIFY switch in the 45 seconds after the switchover, the nuisance status code F6 and the nuisance fault codes A1 or B1 can occur.

If such a switchover occurs and if you push the RESET switch in the 45 seconds after the switchover, the nuisance status code F3 can result.

NOTE: PROCESSORS S345T002-41, -42, -43, -46, -47, OR -60;
To prevent the nuisance fault codes and the nuisance status codes, do not operate the FUEL QTY test switch on P61 panel or do not push the VERIFY switch on the FQIS processor until 45 seconds after these conditions:

- Changes in electrical power input
- Airplane power-up
- FQIS processor power-up
- When the fueling station door is opened or closed
- Operation of the BATT POWER switch, S345, on the fueling control panel, P28
- Operation of the FUEL QTY test switch on the P61 panel.

S 715-031-001

(5) Press Test Procedure
  (a) On the FQIS processor, push and hold the PRESS TEST switch for a minimum of one second and a maximum of seven seconds.
  (b) Make sure the FQIS processor display shows the number 88.
  (c) Release the PRESS TEST switch.

BOEING PROPRIETARY - Copyright (C) - Unpublished Work - See title page for details.

(d) Make sure the FQIS processor display goes off.
(e) Move the DISPLAY CHAN SEL switch to the opposite position.
(f) On the FQIS processor, push and hold the PRESS TEST switch for a minimum of one second and a maximum of seven seconds.
(g) Make sure the FQIS processor display shows the number 88.
(h) Release the PRESS TEST switch.
(i) Make sure the FQIS processor display goes off.

S 715-032-001
(6) BIT Procedure
(a) Push the BIT switch for one second and release.
(b) Make a written record of the fault code shown on the FQIS processor display.
(c) Continue to push and release the BIT switch while you make a written record of all the fault codes.
(d) When the status code 00 shows on the FQIS processor display, all the fault codes are shown.
(e) Push the BIT switch for one second and release.
(f) Make sure the FQIS processor display goes off.

S 715-033-001
(7) RESET Procedure
(a) Push the RESET switch for one second and release.
(b) Make sure the FQIS processor display shows the status code F1.
(c) After approximately 22 seconds, make sure the FQIS processor shows the status code F2.
1) If the FQIS processor display shows the status code F3, do the RESET procedure again.

NOTE: The FQIS processor display must show the status code F2 before you do the VERIFY procedure.

S 715-034-001
(8) VERIFY Procedure
(a) Push the VERIFY switch for one second and release.
(b) Make sure the FQIS processor display shows the status code F4.
(c) After approximately 30 seconds, make sure the FQIS processor display shows the status code F5 or F6.
(d) Push the VERIFY switch for one second and release.
(e) Make sure the FQIS processor display goes off.

S 495-035-001
(9) Remove the E/E Access Hatch Safety Barrier.

BOEING PROPRIETARY - Copyright (C) - Unpublished Work - See title page for details.

S 415-036-001
(10) Go out of the main equipment center.

S 415-037-001
(11) Close the electronics access door, 119AL (AMM 06-41-00/201).

I. Put the Airplane Back to Its Initial Condition

S 865-038-001
(1) Remove electrical power, if it is not necessary (AMM 24-22-00/201).

TASK 28-41-00-725-039-001

3. Comparison Check - Fuel Quantity Indicating System (FQIS) with the Fuel Measuring Sticks

A. References
(1) AMM 06-44-00/201, Wings Access Doors and Panels
(2) AMM 24-22-00/201, Electrical Power Control
(3) AMM 28-44-00/201, Fuel Measuring Sticks

B. Access
(1) Location Zones
521 Leading Edge to Front Spar (Left)
531 Center Auxiliary Tank (Left)
532 Main Tank - Inboard of Rib No. 10 (Left)
541 Main Tank - Outboard of Rib No. 10 (Left)
631 Center Auxiliary Tank (Right)
632 Main Tank - Inboard of Rib No. 10 (Right)
641 Main Tank - Outboard of Rib No. 10 (Right)

(2) Access Panel
521QB Fueling Station Door (Left)

C. Comparison Check of the Fuel Quantity Indicating System (FQIS) with the Fuel Measuring Sticks

S 865-040-001
(1) Supply electrical power (AMM 24-22-00/201).

S 015-041-001
(2) Open the fueling station door, 521QB (AMM 06-44-00/201).

S 975-043-001
(3) Use the fuel measuring sticks to calculate the fuel quantity for each fuel tank (AMM 28-44-00/201).

BOEING PROPRIETARY - Copyright (C) - Unpublished Work - See title page for details.

S 975-122-001
(4) Make sure the fuel quantity is more than five percent of the maximum fuel quantity for the applicable tank.

NOTE: For example, the main tank must have more than 2035 pounds (925 kilograms). If the fuel tank has less than this minimum fuel quantity, it is possible that the comparison test will not find problems with the FQIS.

S 225-044-001
(5) Make sure the difference between the calculated fuel quantity (with the fuel measuring sticks) for each fuel tank and the fuel quantity shown on the load select indicators on the P28 panel and the fuel quantity indicator on the P5 panel is in the subsequent range:
(a) Main tank ±1110 lbs (±503 kgs)
(b) Auxiliary tank ±2128 lbs (±999 kgs)

S 815-123-001
(6) If the fuel quantity shown by the FQIS does not agree with the fuel quantity calculated from the fuel measuring sticks to the specified tolerances, refer to FIM 28-41-00/101 for troubleshooting.

S 415-046-001
(7) Close the fueling station door, 521QB (AMM 06-44-00/201).

S 865-048-001
(8) Remove electrical power if it is not necessary (AMM 24-22-00/201).

TASK 28-41-00-725-152-001
4. FQIS Capacitance Test (Fig. 503, 504, 505, 506, 507, 508)
A. General
(1) This task has four procedures to help with the fault isolation of FQIS equipment and wiring:
(a) E/E Bay Wet Capacitance Test at Volumetric Shutoff
(b) Wing Spar Wet Capacitance Test at Volumetric Shutoff

BOEING PROPRIETARY - Copyright (C) - Unpublished Work - See title page for details.

(c) E/E Bay Dry Capacitance Test
(d) Wing Spar Dry Capacitance Test

B. Equipment

(1) Adapter Harness, Fuel Quantity

(a) P/N 370-044-001, Gull Airborne Instruments, Inc., Engineers Road, Smithtown, N.Y. 11787

NOTE: Use with fuel quantity test set Gull model GTF-2, P/N 361-012-001.

(b) P/N 101-00543, Barfield Instrument Corp., Miami, FL 33142

NOTE: Can be used with fuel quantity test set Barfield model 8000 or fuel quantity test set Gull model GTF-2, P/N 361-012-001.

(c) PSD 60-510/511, (P/N 55-0597-08)
JcAir, Inc.
400 Industrial Parkway
Industrial Airport, KS 66031

NOTE: Use with fuel quantity test set Simmonds P/N 472090-007, or P/N 472090-009, or PSD 40-1, 60-1, 60-2, or 60-2R

(2) Test Boxes (Breakout Boxes):

(a) One of these:
PSD767-1, JcAir, Inc.
A28007-43 (part of A28007-40)

(3) Test Set, Fuel Quantity, one of these:

(a) Model GTF-2, P/N 361-012-001, Gull Airborne Instruments, Inc., 55 Engineers Road, Smithtown, N.Y. 11787

(b) Model 8000, Barfield Instrument Corp., Miami, FL 33142

(c) P/N 472090-007, or 472090-009, or PSD 40-1, 60-1, 60-2, or 60-2R
JcAir, Inc.,
400 Industrial Parkway
Industrial Airport, KS 66031

BOEING PROPRIETARY - Copyright (C) - Unpublished Work - See title page for details.

C. References
(1) AMM 06-41-00/201, Fuselage Access Doors and Panels
(2) AMM 06-44-00/201, Wings Access Doors and Panels
(3) AMM 12-11-01/301, Fuel Tank Pressure Fueling
(4) AMM 24-22-00/201, Electrical Power Control
(5) AMM 28-11-00/201, Fuel Tanks
(6) AMM 28-26-00/201, Defueling
(7) AMM 28-41-08/401, FQIS Processor Unit
(8) AMM 32-00-15/201, Landing Gear Door Locks

D. Access
(1) Location Zones
119 Main Equipment Center (Left and Right)
552 MLG Support Beam to Trailing Edge (Left)
652 MLG Support Beam to Trailing Edge (Right)

(2) Access Panels
552HB Access Panel (Left)
652HB Access Panel (Right)

E. E/E Bay Wet Capacitance Test at Volumetric Shutoff (Fig. 505)

S 655-124-001
(1) Add fuel to the tank that you will test until it is at its full capacity.

S 015-125-001
(2) Remove the fuel quantity processor unit (FQPU) (AMM 28-41-08/401).

S 485-126-001
(3) Install the FQIS test box in the location of the processor.

S 435-127-001
(4) Ground the FQIS test box to the airplane.

S 435-128-001
(5) Connect the HI-Z and the LO-Z connectors on the FQIS test box to the fuel quantity test set (Fig. 504).

S 435-129-001
(6) Connect the ground for the fuel quantity test set to the ground for the FQIS test box (breakout box).

S 975-130-001
(7) Measure the capacitance of each tank unit and the compensator for the applicable fuel tank.

BOEING PROPRIETARY - Copyright (C) - Unpublished Work - See title page for details.

S 975-131-001

(8) Make a written record of the capacitance values (Fig. 505).

NOTE: Tank unit capacitance values are affected by the fuel dielectric constant which also affects the compensator capacitance value. The minimum and maximum limits shown are valid for compensator capacitance values from 107.0 pF to 109.1 pF. If the actual compensator value is higher or lower than these limits, the tank unit values could also be higher or lower because of the dielectric constant of the specific fuel on board.

NOTE: If all of the readings are high, do the procedure in FIM 28-41-00/101 Table 132, 133, or 134 to find a problem with the HI-Z wiring for the applicable tank.

S 085-132-001

(9) Put the airplane back to its usual condition.
- (a) Disconnect the test equipment.
- (b) Remove the test box (breakout box) from the E2-4 shelf.
- (c) Install the fuel quantity processor unit again (AMM 28-41-08/401).

F. Wing Spar Wet Capacitance Test at Volumetric Shutoff (Fig. 506)

S 655-133-001

(1) Add fuel to the tank that you will test until it is at its full capacity.

S 865-134-001

(2) Open these circuit breakers and attach DO-NOT-CLOSE tags:
- (a) On the main power distribution panel, P6:
  - 1) 6E4, FUELING QTY
- (b) On the overhead circuit breaker panel, P11:
  - 1) 11C34, FUEL QTY 1
  - 2) 11M19, FUEL QTY 2
- (c) On the APU External Power Panel, P34:
  - 1) 34L2, FUEL QTY REFUEL

S 015-135-001

(3) Do these steps to get access to the HI-Z bussing plug and the LO-Z connector plug at the applicable fuel tank:
- (a) For the left main fuel tank, remove the access panel, 552HB (AMM 06-44-00/201).
- (b) For the right main fuel tank, remove the access panel, 652HB (AMM 06-44-00/201).

BOEING PROPRIETARY - Copyright (C) - Unpublished Work - See title page for details.

S 495-136-001

WARNING: MAKE SURE THE DOWNLOCKS ARE INSTALLED ON ALL THE LANDING GEAR. WITHOUT THE DOWNLOCKS, THE LANDING GEAR COULD RETRACT AND CAUSE INJURIES TO PERSONS AND DAMAGE TO EQUIPMENT.

(4) For the auxiliary fuel tank, open the doors for the landing gear and install the door locks (AMM 32-00-15/201).

S 035-137-001

(5) Disconnect the HI-Z bussing plug and the LO-Z connector plug from the HI-Z and LO-Z receptacles at the aft face of the rear spar of the wing for the applicable fuel tank.

S 435-138-001

(6) Connect the fuel quantity test set and the fuel quantity adapter harness to the HI-Z and LO-Z receptacles at the rear spar of the wing for the applicable fuel tank (Fig. 504).

S 435-139-001

(7) Connect the fuel quantity adapter harness to the airplane ground.

S 975-140-001

(8) Measure the capacitance for each tank unit and the compensator for the applicable fuel tank (Fig. 506).

S 975-141-001

(9) Make a written record of the capacitance values (Fig. 506).

NOTE: Tank unit capacitance values are affected by the fuel dielectric constant which also affects the compensator capacitance value. The minimum and maximum limits shown are valid for compensator capacitance values from 106.0 pF to 109.1 pF. If the actual compensator value is higher or lower than these limits, the tank unit values could also be higher or lower because of the dielectric constant of the specific fuel on board.

NOTE: If all of the readings are high, do the procedure in FIM 28-41-00/101 Table 132, 133, or 134 to find a problem with the HI-Z wiring for the applicable tank.

S 865-142-001

(10) Put the airplane back to its usual condition.
   (a) Disconnect the test equipment.
   (b) Connect the HI-Z bussing plug and the LO-Z connector plug again.

BOEING PROPRIETARY - Copyright (C) - Unpublished Work - See title page for details.

G. E/E Bay Dry Capacitance Test (Fig. 507)

S 655-143-001
(1) Defuel the applicable fuel tank (AMM 28-26-00/201).
(a) Drain the applicable fuel tank through the sump drain valve (AMM 28-26-00/201).

S 015-144-001
(2) Remove the fuel quantity processor unit (FQPU) (AMM 28-41-08/401).

S 485-145-001
(3) Install the FQIS test box in the location of the processor.

S 435-146-001
(4) Ground the FQIS test box to the airplane.

S 435-147-001
(5) Connect the HI-Z and the LO-Z connectors on the FQIS test box (Fig. 504).

S 435-148-001
(6) Connect the ground for the fuel quantity test set to the ground for the FQIS test box (breakout box).

S 975-149-001
(7) Measure the capacitance of each tank unit and the compensator for the applicable tank fuel tank.

S 975-150-001
(8) Make a written record of the capacitance values (Fig. 507).

S 865-151-001
(9) Put the airplane back to its usual condition.
(a) Disconnect the test equipment.
(b) Remove the test box (breakout box) from the E2-4 shelf.
(c) Install the fuel quantity processor unit again (AMM 28-41-08/401).
(d) For the right or left main tank, close the applicable access panel.

WARNING: MAKE SURE THE DOWNLOCKS ARE INSTALLED ON ALL THE LANDING GEAR. WITHOUT THE DOWNLOCKS, THE LANDING GEAR COULD RETRACT AND CAUSE INJURIES TO PERSONS AND DAMAGE TO EQUIPMENT.

(e) For the auxiliary fuel tank, remove the door locks and close the doors for the main landing gear (AMM 32-00-15/201).

BOEING PROPRIETARY - Copyright (C) - Unpublished Work - See title page for details.

H. Wing Spar Dry Capacitance Test (Fig. 508)

S 655-152-001

(1) Defuel the applicable fuel tank if it is not defueled (AMM 28-26-00/201).
   (a) Drain the applicable fuel tank through the sump drain valve (AMM 28-26-00/201).

S 865-153-001

(2) Open these circuit breakers and attach DO-NOT-CLOSE tags:
   (a) On the main power distribution panel, P6:
      1) 6E4, FUELING QTY
   (b) On the overhead circuit breaker panel, P11:
      1) 11C34, FUEL QTY 1
      2) 11M19, FUEL QTY 2
   (c) On the APU External Power Panel, P34:
      1) 34L2, FUEL QTY REFUEL

S 015-145-001

(3) Do these steps to get access to the HI-Z bussing plug and the LO-Z connector plug at the applicable fuel tank:
   (a) For the left main fuel tank, remove the access panel, 552HB (AMM 06-44-00/201).
   (b) For the right main fuel tank, remove the access panel, 652HB (AMM 06-44-00/201).

S 495-146-001

WARNING: MAKE SURE THE DOWNLOCKS ARE INSTALLED ON ALL THE LANDING GEAR. WITHOUT THE DOWNLOCKS, THE LANDING GEAR COULD RETRACT AND CAUSE INJURIES TO PERSONS AND DAMAGE TO EQUIPMENT.

(4) For the auxiliary fuel tank, open the doors for the landing gear and install the door locks (AMM 32-00-15/201).

S 035-147-001

(5) Disconnect the HI-Z bussing plug and the LO-Z connector plug from the HI-Z and LO-Z receptacles at the aft face of the rear spar of the wing for the applicable fuel tank.

S 435-143-001

(6) Connect the fuel quantity test set and the fuel quantity adapter harness to the HI-Z and LO-Z receptacles at the rear spar of the wing for the applicable fuel tank (Fig. 504).

S 435-144-001

(7) Connect the fuel quantity adapter harness to the airplane ground.

S 975-165-001

(8) Measure the capacitance for each tank unit and the compensator for the applicable fuel tank.

BOEING PROPRIETARY - Copyright (C) - Unpublished Work - See title page for details.

S 975-166-001

(9) Make a written record of the capacitance values (Fig. 508).

S 865-167-001

(10) Put the airplane back to its usual condition.

(a) Disconnect the test equipment.

(b) Connect the HI-Z bussing plug and the LO-Z connector plug again.

(c) For the right or left main tank, close the applicable access panel.

WARNING: MAKE SURE THE DOWNLOCKS ARE INSTALLED ON ALL THE LANDING GEAR. WITHOUT THE DOWNLOCKS, THE LANDING GEAR COULD RETRACT AND CAUSE INJURIES TO PERSONS AND DAMAGE TO EQUIPMENT.

(d) For the auxiliary fuel tank, remove the door locks and close the doors for the main landing gear (AMM 32-00-15/201).

TASK 28-41-00-765-151-001

5. Insulation Resistance Test

A. General

(1) This task has three procedures for the measurement of insulation resistance for FQIS wiring:

(a) Insulation resistance test for the left main tank.

(b) Insulation resistance test for the left and right auxiliary tank.

(c) Insulation resistance test for the right main tank.

(2) Each of these tests does a test of the insulation resistance for the in-tank wiring and the out-of-tank wiring together and then separately. A test for continuity of the out-of-tank wiring is also done.

(3) If you use the Gull, GTF-2 Test set, you will need to use two different methods to measure the insulation resistance values for the fuel tank wiring.

(a) Use the appropriate Resistance Function Switch setting and the aircraft tank unit terminals to measure the LO-Z to HI-Z, LO-Z to Ground, and HI-Z to Ground resistance values. The tank unit terminals are located at the bottom right hand corner of the test box.

BOEING PROPRIETARY - Copyright (C) - Unpublished Work - See title page for details.

(b) Use the "EXT RES" position on the Resistance Function Switch and the external resistnace terminals to measure the LO-Z to Shield, HI-Z Shield, and Shield to Ground resistant values. The external resistance terminals are located at the top of the test box to the right of the digital display.

B. Equipment

(1) Adapter Harness, Fuel Quantity

(a) P/N 370-044-001, Gull Airborne Instruments, Inc., Engineers Road, Smithtown, N.Y. 11787

NOTE: Use with fuel quantity test set Gull model GTF-2, P/N 361-012-001.

(b) P/N 101-00543, Barfield Instrument Corp., Miami, FL 33142

NOTE: Can be used with fuel quantity test set Barfield model 8000 or fuel quantity test set Gull model GTF-2, P/N 361-012-001.

(c) PSD 60-510/511, (P/N 55-0597-08)
JcAir, Inc.
400 Industrial Parkway
Industrial Airport, KS 66031

NOTE: Use with fuel quantity test set Simmonds P/N 472090-007, or P/N 472090-009, or PSD 40-1, 60-1, 60-2, or 60-2R

(2) Test Boxes (Breakout Boxes):

(a) One of these:

1) A28007-43 (part of A28007-40)

2) PSD767-1, JcAir, Inc.

**

(3) Test Set, Fuel Quantity, one of these:

(a) Model GTF-2, P/N 361-012-001, Gull Airborne Instruments, Inc., 55 Engineers Road, Smithtown, N.Y. 11787

(b) Model 8000, Barfield Instrument Corp., Miami, FL 33142

(c) P/N 472090-007, or 472090-009, or PSD 40-1, 60-1, 60-2, or 60-2R
JcAir, Inc.,
400 Industrial Parkway
Industrial Airport, KS 66031

BOEING PROPRIETARY - Copyright (C) - Unpublished Work - See title page for details.

C. References
(1) AMM 06-41-00/201, Fuselage Access Doors and Panels
(2) AMM 06-44-00/201, Wings Access Doors and Panels
(3) AMM 12-11-01/301, Fuel Tank Pressure Fueling
(4) AMM 24-22-00/201, Electrical Power Control
(5) AMM 28-11-00/201, Fuel Tanks
(6) AMM 28-26-00/201, Defueling
(7) AMM 28-41-08/401, FQIS Processor Unit
(8) AMM 32-00-15/201, Landing Gear Door Locks

D. Access
(1) Location Zones
119 Main Equipment Center (Left and Right)
552 MLG Support Beam to Trailing Edge (Left)
652 MLG Support Beam to Trailing Edge (Right)

(2) Access Panels
552HB Access Panel (Left)
652HB Access Panel (Right)

E. Insulation Resistance Test for the Left Main Tank

S 765-153-001
(1) Do these steps to do a test of the insulation resistance at the E/E bay:

NOTE: These steps measure the insulation resistance of the in-tank and out-of-tank wiring together.

(a) Remove the fuel quantity processor unit (FQPU) (AMM 28-41-08/401).
(b) Install the fuel quantity test box in the location of the fuel quantity processor unit in the E2-4 shelf.
(c) Ground the FQIS test box to the airplane.
(d) Connect the fuel quantity test set to the HI-Z and LO-Z connectors on the FQIS test box for the left main tank (Fig. 504).
(e) Connect the ground for the FQIS test set to the ground for the FQIS test box.
(f) Measure each of the resistances shown in Fig. 509 and make a written record of these resistances.

NOTE: If you use the Gull GTF-2 Tester, use the external resistance terminals to measure the LO-Z to Shield, HI-Z to Shield, and Shield to Ground Resistance Values. The external resistance terminals are found to the right of the digital display. You will also need to put the resistance function switch to "EXT RES" position.

BOEING PROPRIETARY - Copyright (C) - Unpublished Work - See title page for details.

S 765-154-001

(2) Do these steps to do an insulation resistance test at the wing spar for the left main tank:

NOTE: These steps measure the insulation resistance of the in-tank wiring and equipment only.

(a) Remove the access panel, 552HB (AMM 06-44-00/201).

(b) Disconnect the HI-Z bussing plug M722 and the LO-Z connector D1582 at the wing spar.

1) Attach the bussing plug to the airplane structure to make it secure.

NOTE: This will prevent damage to the bussing plug and the HI-Z wiring while you do the test.

(c) Connect the fuel quantity test set and the fuel quantity adapter harness to the HI-Z and LO-Z receptacles at the wing spar (Fig. 504).

(d) Measure each of the resistances shown in Fig. 509 and make a written record of each resistance.

NOTE: If you use the Gull GTF-2 Tester, use the external resistance terminals to measure the LO-Z to Shield, HI-Z to Shield, and Shield to Ground Resistance Values. The external resistance terminals are found to the right of the digital display. You will also need to put the resistance function switch to "EXT RES" position.

S 765-155-001

(3) Do these steps use the insulation resistance test results to find problems:

(a) Do these checks of the insulation resistance values:

1) Minimum resistance check:

a) Make sure each resistance value is not less than 20 megohms.

NOTE: Insulation resistance values of less than 20 megohms are shown as 0 megohms on PSD 40 and PSD 60 test units.

BOEING PROPRIETARY - Copyright (C) - Unpublished Work - See title page for details.

b) If one or more of the resistance values is less than 20 megohms, the applicable wire harness can affect the FQIS system accuracy and should be replaced.

NOTE: Insulation resistance values less than 100 megohms may indicate a developing wire fault or degrading wiring. If the fuel quantity gage is fluctuating and one or more of the insulation resistance values are less than 100 megohms, replacement of the applicable harness may prevent subsequent problems.

2) Relative comparison resistance check:

NOTE: This check is a relative check. If a BITE message continues to show and the results of this test are negative, and all other troubleshooting recommmendations have been tried, replacement of the applicable harness may fix the problem.

a) Compare all wire resistance values to make sure that one or more values are not more than 20 percent lower in resistance than the other wires.
b) Replace the applicable harness if the fault continues to show and all other fault isolation has been tried.

S 865-156-001
(4) Put the airplane back to its usual condition.
(a) Disconnect the test equipment.
(b) Connect the HI-Z bussing plug M722 and the LO-Z connector D1582 at the wing spar again (WDM 28-41-21).
(c) Install the access panel, 552HB (AMM 06-44-00/201) again.

F. Insulation Resistance Test for the Left and Right Auxiliary Fuel Tank

S 765-157-001
(1) Do these steps to do an insulation resistance test at the E/E bay for the left and right auxiliary fuel tank:

NOTE: These steps do a test of the insulation resistance of the out-of-tank wiring and the in-tank wiring together.

(a) Remove the fuel quantity processor unit (FQPU) (AMM 28-41-08/401).
(b) Ground the FQIS test box to the airplane.
(c) Install the fuel quantity test box in the location of the fuel quantity processor unit in the E2-4 shelf.
(d) Connect the fuel quantity test set to the HI-Z and LO-Z connectors on the FQIS test box for the auxiliary tank.
(e) Connect the ground for the FQIS test set to the ground for the FQIS test box.

BOEING PROPRIETARY - Copyright (C) - Unpublished Work - See title page for details.

(f) Measure each of the resistances shown in Fig. 510 and make a written record of these resistances.

NOTE: If you use the Gull GTF-2 Tester, use the external resistance terminals to measure the LO-Z to Shield, HI-Z to Shield, and Shield to Ground Resistance Values. The external resistance terminals are found to the right of the digital display. You will also need to put the resistance function switch to "EXT RES" position.

S 765-158-001

(2) Do these steps to do an insulation resistance test at the wing spar for the left and right auxiliary tank:

NOTE: These steps do an insulation test of the in-tank wiring and equipment only.

WARNING: OBEY THE INSTALLATION PROCEDURE FOR THE DOOR LOCKS. THE DOORS OPEN AND CLOSE QUICKLY. THE MOVEMENT OF THE DOORS CAN CAUSE INJURIES TO PERSONS AND DAMAGE TO EQUIPMENT.

(a) Remove the door locks from the landing gear doors and close the landing gear doors (AMM 32-00-15/201).

(b) Disconnect the HI-Z bussing plugs, M724 and M725, and the LO-Z connectors, D2818 and D2816, at the wing spar (WDM 28-41-23).

1) Attach the bussing plug to the airplane structure to make it secure.

NOTE: This will prevent damage to the bussing plug and HI-Z wiring while you do the test.

(c) Connect the fuel quantity test set and the fuel quantity adapter harness to the HI-Z and LO-Z receptacles for the left auxiliary tank at the wing spar (Fig. 504).

(d) Measure each of the resistances shown in Fig. 510 and make a written record of each resistance.

NOTE: If you use the Gull GTF-2 Tester, use the external resistance terminals to measure the LO-Z to Shield, HI-Z to Shield, and Shield to Ground Resistance Values. The external resistance terminals are found to the right of the digital display. You will also need to put the resistance function switch to "EXT RES" position.

(e) Connect the fuel quantity test set and the fuel quantity adapter harness to the HI-Z and LO-Z receptacles for the right auxiliary tank at the wing spar (Fig. 504).

BOEING PROPRIETARY - Copyright (C) - Unpublished Work - See title page for details.

(f) Measure each of the resistances shown in Fig. 510 and make a written record of each resistance.

NOTE: If you use the Gull GTF-2 Tester, use the external resistance terminals to measure the LO-Z to Shield, HI-Z to Shield, and Shield to Ground Resistance Values. The external resistance terminals are found to the right of the digital display. You will also need to put the resistance function switch to "EXT RES" position.

S 765-159-001

(3) Do these steps use the insulation resistance test results to find problems:

(a) Do these checks of the insulation resistance values:

1) Minimum resistance check:

a) Make sure each resistance value is not less than 20 megohms.

NOTE: Insulation resistance values of less than 20 megohms are shown as 0 megohms on PSD 40 and PSD 60 test units.

b) If one or more of the resistance values is less than 20 megohms, the applicable wire harness can affect the FQIS system accuracy and should be replaced.

NOTE: Insulation resistance values less than 100 megohms may indicate a developing wire fault or degrading wiring. If the fuel quantity gage is fluctuating and one or more of the insulation resistance values are less than 100 megohms, replacement of the applicable harness may prevent subsequent problems.

2) Relative comparison resistance check:

NOTE: This check is a relative check. If a BITE message continues to show and the results of this test are negative, and all other troubleshooting recommmendations have been tried, replacement of the applicable harness may fix the problem.

a) Compare all wire resistance values to make sure that one or more values are not more than 20 percent lower in resistance than the other wires.

b) Replace the applicable harness if the fault continues to show and all other fault isolation has been tried.

BOEING PROPRIETARY - Copyright (C) - Unpublished Work - See title page for details.

S 865-160-001

(4) Put the airplane back to its usual condition.

(a) Disconnect the test equipment.

(b) Connect the HI-Z bussing plugs, M724 and M725, and the LO-Z connectors, D2818 and D2816, at the wing spar again (WDM 28-41-23).

(c) Install the access panel, 652HB (AMM 06-44-00/201) again.

G. Insulation Resistance Test for the Right Main Tank

S 765-161-001

(1) Do these steps to do an insulation resistance test at the E/E bay for the right main tank:

NOTE: These steps do an insulation resistance test of the out-of-tank and the in-tank wiring together.

(a) Remove the fuel quantity processor unit (FQPU) (AMM 28-41-08/401).

(b) Install the fuel quantity test box in the location of the fuel quantity processor unit in the E2-4 shelf.

(c) Ground the FQIS test box to the airplane.

(d) Connect the fuel quantity test set to the HI-Z and LO-Z connectors on the FQIS test box for the right main tank (Fig. 504).

(e) Connect the ground for the FQIS test set to the ground for the FQIS test box.

(f) Measure each of the resistances shown in Fig. 511 and make a written record of these resistances.

NOTE: If you use the Gull GTF-2 Tester, use the external resistance terminals to measure the LO-Z to Shield, HI-Z to Shield, and Shield to Ground Resistance Values. The external resistance terminals are found to the right of the digital display. You will also need to put the resistance function switch to "EXT RES" position.

S 765-162-001

(2) Do these steps to do an insulation resistance test at the wing spar for the right main tank:

NOTE: These steps do an insulation test of the in-tank wiring and equipment only.

(a) Remove the access panel, 652HB (AMM 06-44-00/201).

BOEING PROPRIETARY - Copyright (C) - Unpublished Work - See title page for details.

(b) Disconnect the HI-Z bussing plug, M723, and the LO-Z connector, D1584, at the wing spar (WDM 28-41-22).
1) Attach the bussing plug to the airplane structure to make it secure.

NOTE: This will prevent damage to the bussing plug and HI-Z wiring while you do the test.

(c) Connect the fuel quantity test set and the fuel quantity adapter harness to the HI-Z and LO-Z receptacles at the wing spar.
(d) Measure each of the resistances shown in Fig. 511 and make a written record of each resistance.

NOTE: If you use the Gull GTF-2 Tester, use the external resistance terminals to measure the LO-Z to Shield, HI-Z to Shield, and Shield to Ground Resistance Values. The external resistance terminals are found to the right of the digital display. You will also need to put the resistance function switch to "EXT RES" position.

S 765-163-001
(3) Do these steps use the insulation resistance test results to find problems:
(a) Do these checks of the insulation resistance values:
1) Minimum resistance check:
a) Make sure each resistance value is not less than 20 megohms.

NOTE: Insulation resistance values of less than 20 megohms are shown as 0 megohms on PSD 40 and PSD 60 test units.

b) If one or more of the resistance values is less than 20 megohms, the applicable wire harness can affect the FQIS system accuracy and should be replaced.

NOTE: Insulation resistance values less than 100 megohms may indicate a developing wire fault or degrading wiring. If the fuel quantity gage is fluctuating and one or more of the insulation resistance values are less than 100 megohms, replacement of the applicable harness may prevent subsequent problems.

BOEING PROPRIETARY - Copyright (C) - Unpublished Work - See title page for details.

2) Relative comparison resistance check:

NOTE: This check is a relative check. If a BITE message continues to show and the results of this test are negative, and all other troubleshooting recommmendations have been tried, replacement of the applicable harness may fix the problem.

a) Compare all wire resistance values to make sure that one or more values are not more than 20 percent lower in resistance than the other wires.
b) Replace the applicable harness if the fault continues to show and all other fault isolation has been tried.

S 865-164-001
(4) Put the airplane back to its usual condition.
(a) Disconnect the test equipment.
(b) Connect the HI-Z bussing plug, M723, and the LO-Z connector, D1584, at the wing spar (WDM 28-41-22) again.
(c) Install the access panel, 652HB (AMM 06-44-00/201) again.

TASK 28-41-00-715-199-001
6. Operational Test - Fuel Configuration Warning System
A. General
(1) This procedure is a scheduled maintenance task.
(2) This task has:
(a) A check of the flight deck indicators.
(b) A fuel quantity BITE check of the FQIS processor.
B. Equipment
(1) E/E Access Hatch Safety Barrier - A53002-5
C. References
(1) AMM 06-41-00/201, Fuselage Access Doors and Panels
(2) AMM 06-44-00/201, Wings Access Doors and Panels
(3) AMM 24-22-00/201, Electrical Power Control
D. Access
(1) Location Zones
119 Main Equipment Center (Left and Right)
211 Control Cabin (Left)
212 Conrtol Cabin (Right)

BOEING PROPRIETARY - Copyright (C) - Unpublished Work - See title page for details.

(2) Access Panels
119AL Electronics Access Door

E. Prepare for Procedure

S 865-200-001
(1) Supply electrical power (AMM 24-22-00/201).

F. Check of the Flight Deck Indicators (Fig. 502)

S 215-172-001
(1) Make sure the six EICAS circuit breakers are closed.

S 865-173-001
(2) Push the ECS MSG switch on the EICAS MAINT panel on the right side panel, P61.

S 215-174-001
(3) Make sure the EICAS maintenance message, FUEL QTY BITE, does not show on the bottom display.

S 865-175-001
(4) Push the STATUS switch on the EICAS display select panel (found on top of the aisle stand).

S 215-176-001
(5) Push and hold the FUEL QTY test switch on the right side panel, P61, in the FUEL QTY position and do the steps that follow:

NOTE: To prevent the nuisance fault codes and the nuisance status codes, do not push the VERIFY switch on the FQIS processor and do not operate the FUEL QTY test switch on the P61 panel until 45 seconds after these conditions:

Changes in electrical power input
Airplane power-up
FQIS processor power-up
When the fueling station door is opened or closed
Operation of the BATT POWER switch, S345, on the fueling control panel, P28.

If you use the FUEL QTY test switch again, wait a minimum of 45 seconds between each use. Failure to wait 45 seconds can cause nuisance fault codes or nuisance status codes to show on the FQIS processor.

(a) Make sure the fuel quantity indicators on the overhead panel, P5, show 88.8.
(b) Make sure the total fuel quantity indicator on the P5 panel shows 188.8.
(c) Make sure the fuel temperature indicator on the P5 panel shows -185 ±2.
(d) Make sure the FUEL CONFIG light on the P5 panel comes on.

BOEING PROPRIETARY - Copyright (C) - Unpublished Work - See title page for details.

(e) Make sure the EICAS caution message, LOW FUEL, shows on the top display.
(f) Make sure the EICAS status message, FUEL QTY IND, shows on the the bottom display.
(g) Make sure the EICAS status message, FUEL QTY CHANNEL, shows on the bottom display.

S 865-178-001
(6) Release the FUEL QTY test switch in 7 seconds or less.

S 215-179-001
(7) Make sure all the displays go back to their usual condition.

S 865-180-001
(8) After 45 seconds, push and hold the FUEL QTY test switch on the right side panel, P61, in the FUEL QTY position.

S 865-181-001
(9) Push and release the ECS MSG switch on the EICAS MAINT panel on the right side panel, P61.

S 215-182-001
(10) Make sure the EICAS maintenance message, FUEL QTY BITE, shows on the bottom display.

S 865-183-001
(11) Release the FUEL QTY test switch in 7 seconds or less.

S 215-184-001
(12) Make sure all the displays go back to their usual condition.

G. Fuel Quantity BITE Procedure (Fig. 503)

S 415-185-001
(1) Close the fueling station door, 521QB, if it is open (AMM 06-44-00/201).

S 015-188-001

WARNING: MAKE SURE THE ELECTRONICS ACCESS DOOR (119AL) IS IN THE FULL OPEN POSITION. IF THE ELECTRONICS ACCESS DOOR IS NOT IN THE FULL OPEN POSITION, IT CAN ACCIDENTALLY MOVE AND CAUSE INJURY.

(2) Push the electronics access door, 119AL, to the full open position to engage the hold open detent (AMM 06-41-00/201).

S 015-189-001
(3) Go into the main equipment center.

BOEING PROPRIETARY - Copyright (C) - Unpublished Work - See title page for details.

S 095-190-001

(4) Install the E/E Access Hatch Safety Barrier across the opening in the electronics access door.

NOTE: Do not push the RESET switch on the FQIS processor before you make a written record of all fault codes. When you push the RESET switch, it erases all fault codes kept in the FQIS processor memory.

NOTE: PROCESSORS S345T002-41, -42, -43, -46, -47, OR -60;
To prevent nuisance fault codes and nuisance status codes, do not move the DISPLAY CHAN SEL switch on the FQIS processor to the opposite position unless the FQIS processor display is off.

If such a switchover occurs and if you push the VERIFY switch in the 45 seconds after the switchover, the nuisance status code F6 and the nuisance fault codes A1 or B1 can occur.

If such a switchover occurs and if you push the RESET switch in the 45 seconds after the switchover, the nuisance status code F3 can result.

NOTE: PROCESSORS S345T002-41, -42, -43, -46, -47, OR -60;
To prevent the nuisance fault codes and the nuisance status codes, do not operate the FUEL QTY test switch on P61 panel or do not push the VERIFY switch on the FQIS processor until 45 seconds after these conditions:

- Changes in electrical power input
- Airplane power-up
- FQIS processor power-up
- When the fueling station door is opened or closed
- Operation of the BATT POWER switch, S345, on the fueling control panel, P28
- Operation of the FUEL QTY test switch on the P61 panel.

S 715-191-001

(5) Press Test Procedure
  (a) On the FQIS processor, push and hold the PRESS TEST switch for a minimum of one second and a maximum of seven seconds.
  (b) Make sure the FQIS processor display shows the number 88.
  (c) Release the PRESS TEST switch.
  (d) Make sure the FQIS processor display goes off.
  (e) Move the DISPLAY CHAN SEL switch to the opposite position.
  (f) On the FQIS processor, push and hold the PRESS TEST switch for a minimum of one second and a maximum of seven seconds.

BOEING PROPRIETARY - Copyright (C) - Unpublished Work - See title page for details.

(g) Make sure the FQIS processor display shows the number 88.
(h) Release the PRESS TEST switch.
(i) Make sure the FQIS processor display goes off.

S 715-192-001
(6) BIT Procedure
(a) Push the BIT switch for one second and release.
(b) Make a written record of the fault code shown on the FQIS processor display.
(c) Continue to push and release the BIT switch while you make a written record of all the fault codes.
(d) When the status code 00 shows on the FQIS processor display, all the fault codes are shown.
(e) Push the BIT switch for one second and release.
(f) Make sure the FQIS processor display goes off.

S 715-193-001
(7) RESET Procedure
(a) Push the RESET switch for one second and release.
(b) Make sure the FQIS processor display shows the status code F1.
(c) After approximately 22 seconds, make sure the FQIS processor shows the status code F2.
1) If the FQIS processor display shows the status code F3, do the RESET procedure again.

NOTE: The FQIS processor display must show the status code F2 before you do the VERIFY procedure.

S 715-194-001
(8) VERIFY Procedure
(a) Push the VERIFY switch for one second and release.
(b) Make sure the FQIS processor display shows the status code F4.
(c) After approximately 30 seconds, make sure the FQIS processor display shows the status code F5 or F6.
(d) Push the VERIFY switch for one second and release.
(e) Make sure the FQIS processor display goes off.

S 495-195-001
(9) Remove the E/E Access Hatch Safety Barrier.

S 415-196-001
(10) Go out of the main equipment center.

S 415-197-001
(11) Close the electronics access door, 119AL (AMM 06-41-00/201).

H. Put the Airplane Back to Its Initial Condition

S 865-198-001
(1) Remove electrical power, if it is not necessary (AMM 24-22-00/201).

BOEING PROPRIETARY - Copyright (C) - Unpublished Work - See title page for details.

FUEL QUANTITY INDICATING SYSTEM (FQIS) - ADJUSTMENT/TEST

1. General
   A. This procedure has these tasks:
      (1) Operational Test - Fuel Quantity Indicating System
      (2) Comparison Check - Fuel Quantity Indicating System (FQIS) with the Fuel Measuring Sticks
      (3) System Test - Fuel Quantity Indicating System
      (4) Insulation Resistance Test
      (5) Operational Test - Fuel Configuration Warning System
   B. The operational test makes sure the FQIS system operates correctly.
   C. The comparison check makes sure the fuel quantity shown agrees with the correct quantity of fuel in the fuel tanks.
   D. The system test makes sure the capacitance values for the tank units and the compensators are in the permitted limits for FQIS precision.
   E. The auxiliary tank fuel probes are identified as follows:

Maintenance Manual	FQIS Processor
L AUX 1	LCTR TU 1
L AUX 2	LCTR TU 2
L AUX 3	LCTR TU 3
L AUX 4	LCTR TU 4
R AUX 1	RCTR TU 5
R AUX 2	RCTR TU 6
R AUX 3	RCTR TU 7
R AUX 4	RCTR TU 8
L AUX 5	LCTR TU 9

   F. The insulation resistance test measures the insulation resistance for the FQIS wiring in the left and right main tank and left and right auxiliary tank.

TASK 28-41-00-715-001-002

2. Operational Test - Fuel Quantity Indicating System (Fig. 501, 502, and 503)
   A. General
      (1) This procedure contains:
         (a) A check of the load select indicators on the fueling control panel, P28.
         (b) A check of the flight deck indicators.
         (c) A fuel quantity BITE procedure at the FQIS processor.
   B. Equipment
      (1) E/E Access Hatch Safety Barrier - A53002-5
   C. References
      (1) AMM 06-41-00/201, Fuselage Access Doors and Panels
      (2) AMM 06-44-00/201, Wings Access Doors and Panels
      (3) AMM 24-22-00/201, Electric Power Control

BOEING PROPRIETARY - Copyright (C) - Unpublished Work - See title page for details.

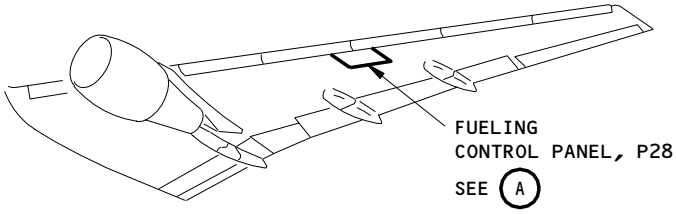

LEFT WING

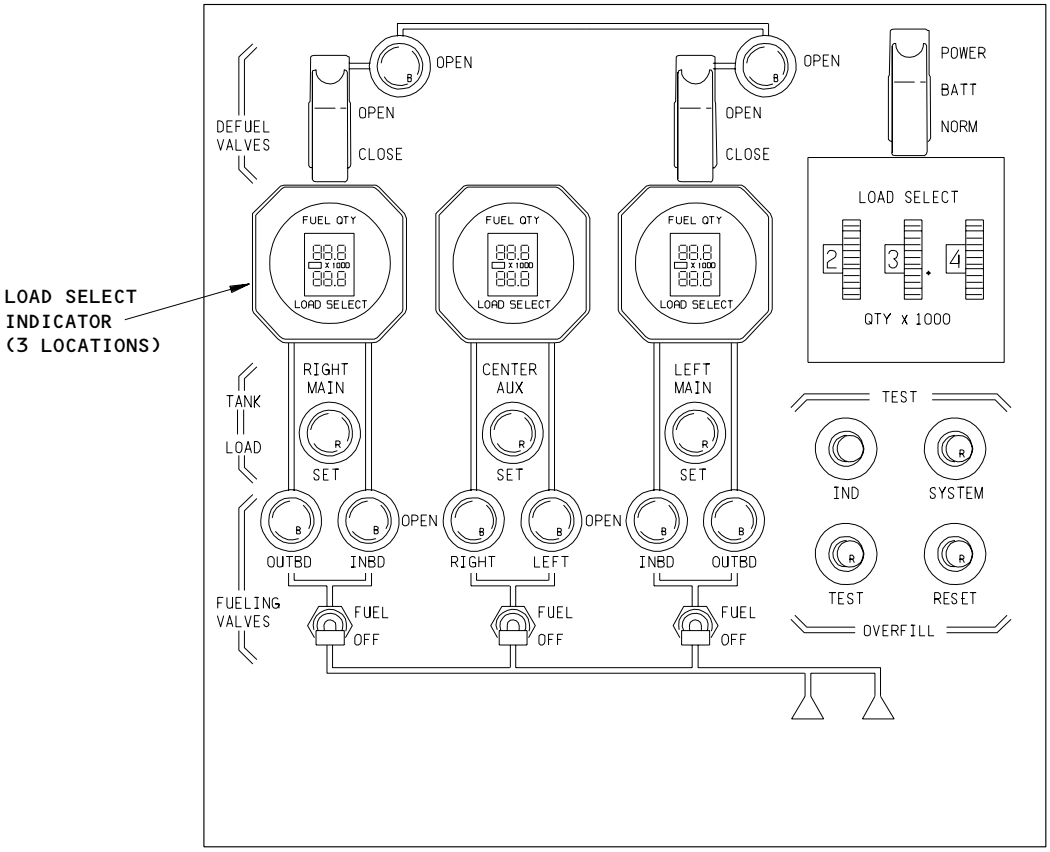

FUELING CONTROL PANEL, P28

A

Fueling Control Panel
Figure 501

BOEING PROPRIETARY - Copyright (C) - Unpublished Work - See title page for details.

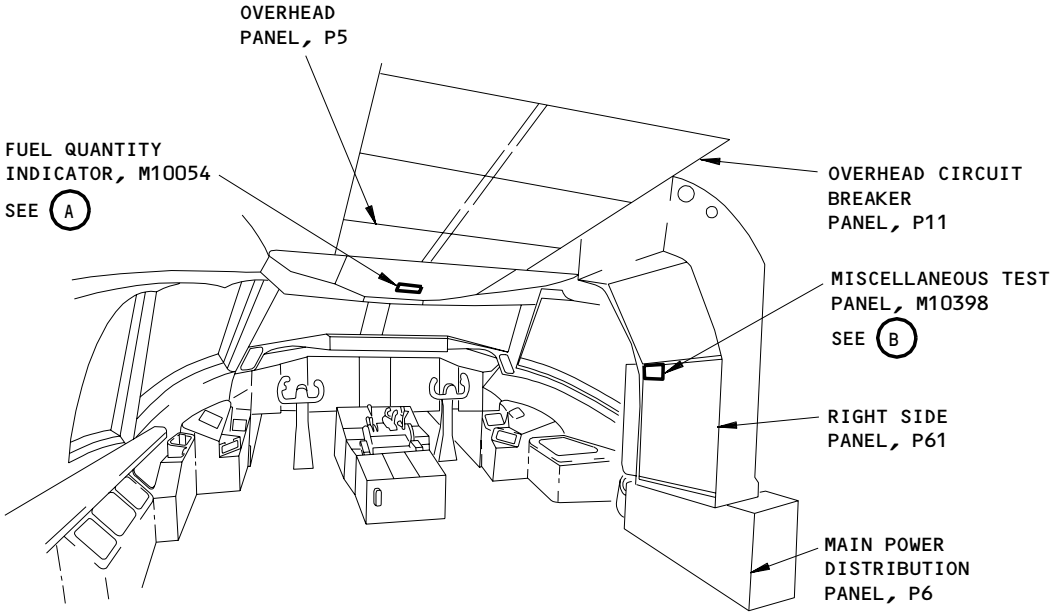

FLIGHT COMPARTMENT

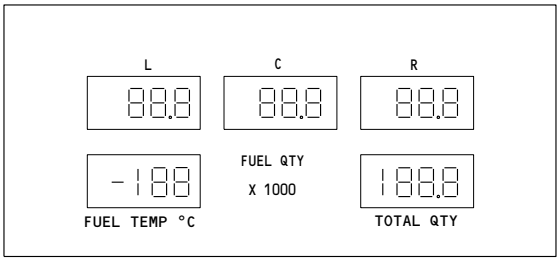

FUEL QUANTITY INDICATOR, M10054

A

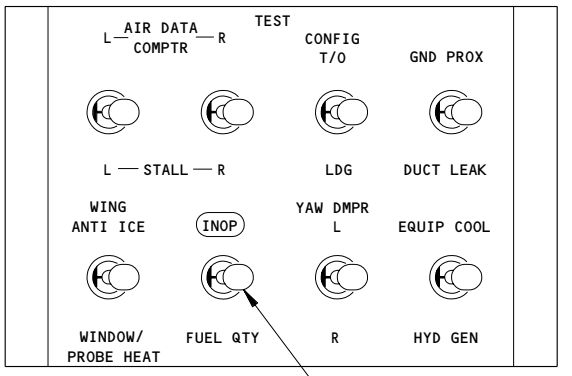

MISCELLANEOUS TEST PANEL, M10398

B

Fuel Quantity Indicator
Figure 502

BOEING PROPRIETARY - Copyright (C) - Unpublished Work - See title page for details.

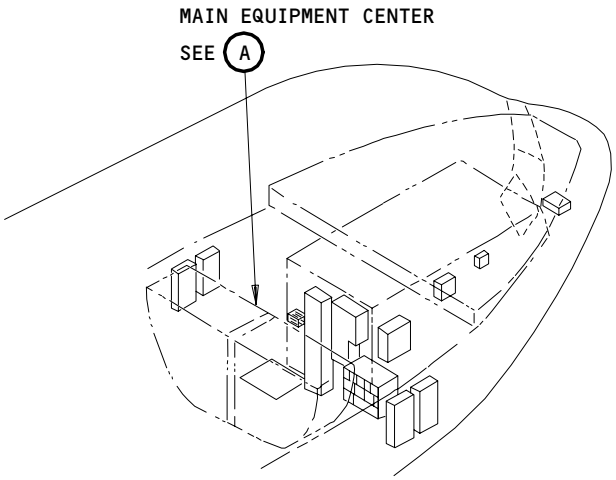

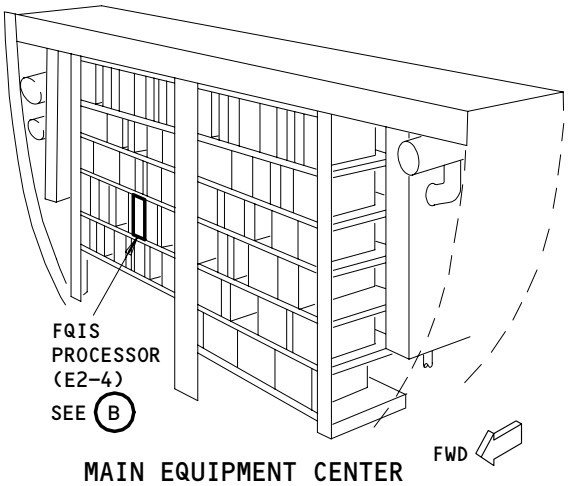

MAIN EQUIPMENT CENTER

A

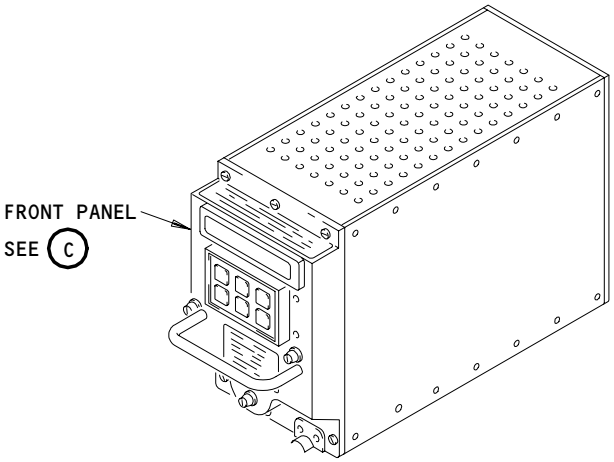

FQIS PROCESSOR

B

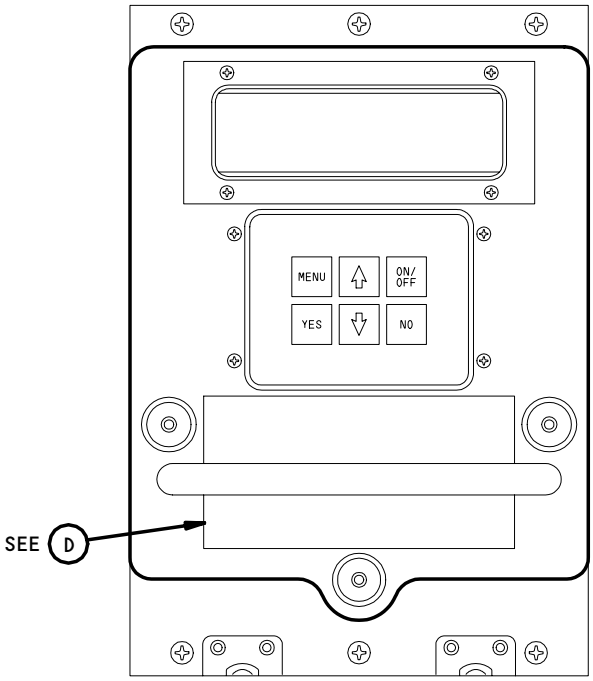

FRONT PANEL

C

INSTRUCTIONS:
Press ON to start BITE display
Press YES or NO in response to questions (?)
Press ⇧ to display next result
Press ⇩ to display previous result
Press MENU to return to current menu
Press OFF to stop BITE display

PRIMARY BITE MENU OPTIONS:
FAULT HISTORY: Displays past faults by flight leg
SYSTEM DATA: Displays system/LRU Data
SELF TEST: Tests system/LRUs interfaces
SYSTEM CONFIG: Displays system configuration
ERASE FAULT HISTORY:

D

FQIS Processor
Figure 503

BOEING PROPRIETARY - Copyright (C) - Unpublished Work - See title page for details.

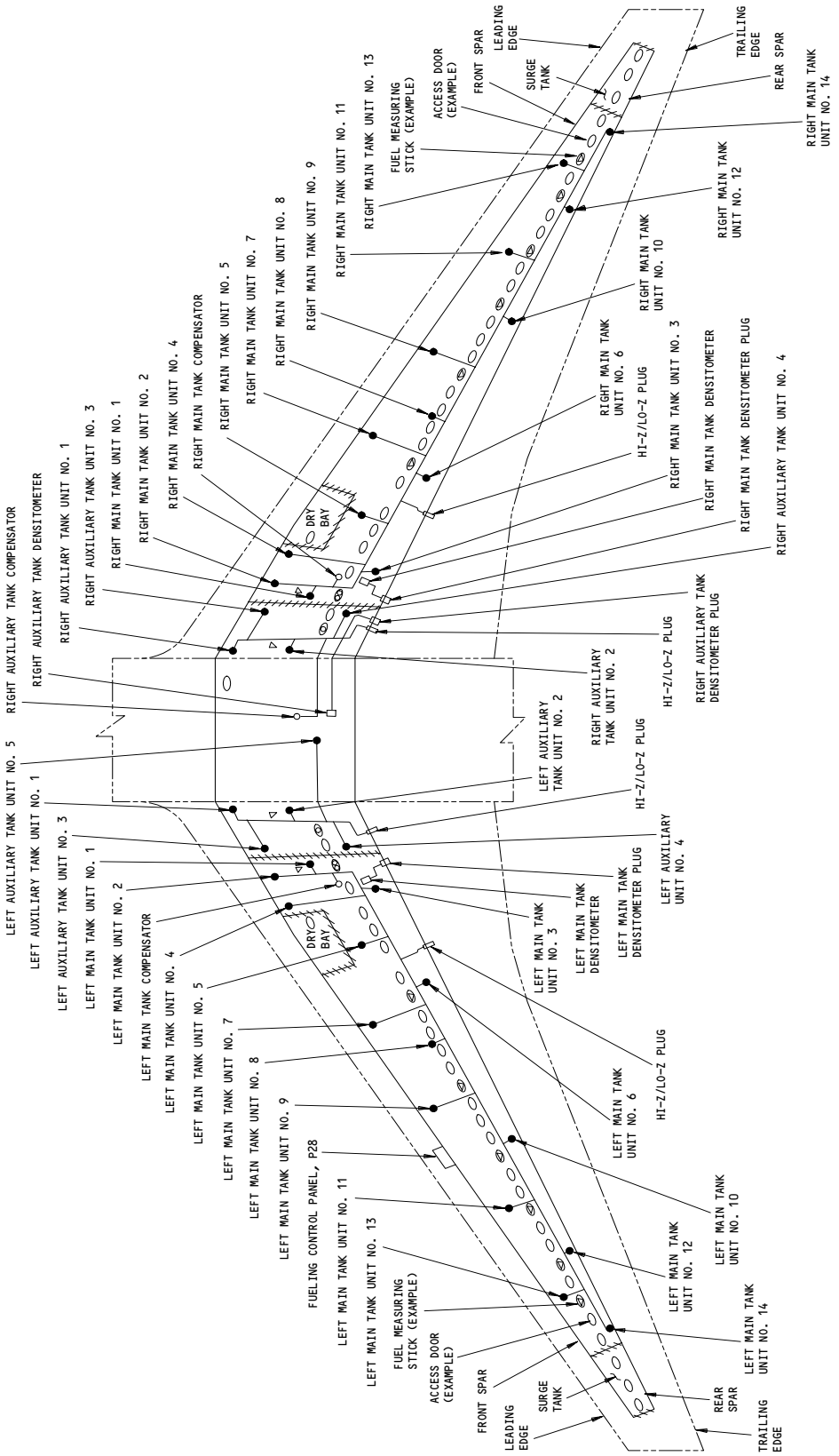

Fuel Quantity Indicating System (FQIS)
Figure 504

A35093

BOEING PROPRIETARY - Copyright (C) - Unpublished Work - See title page for details.

TANK UNIT OR COMPENSATOR UNDER TEST	MIN CAPACITANCE (PICOFARADS)	MAX CAPACITANCE (PICOFARADS)	EQUIP. NO.	FUEL QTY PROCESSOR REFERENCE DESIGNATOR
COMPENSATOR - L MAIN TANK	50.72	51.48	TS300	LEFT COMP
COMPENSATOR - AUX TANK	50.72	51.48	TS328	CENTER COMP
COMPENSATOR - R MAIN TANK	50.72	51.48	TS334	RIGHT COMP
L AUX TANK UNIT NO. 1	119.25	121.00	TS319	LCTR TU 1
L AUX TANK UNIT NO. 2	116.21	117.89	TS318	LCTR TU 2
L AUX TANK UNIT NO. 3	97.75	99.20	TS317	LCTR TU 3
L AUX TANK UNIT NO. 4	81.30	82.55	TS316	LCTR TU 4
L AUX TANK UNIT NO. 5	93.71	95.04	TS320	LCTR TU 9
L MAIN TANK UNIT NO. 1	93.71	95.04	TS314	LEFT TU 1
L MAIN TANK UNIT NO. 2	83.04	84.21	TS313	LEFT TU 2
L MAIN TANK UNIT NO. 3	68.08	69.12	TS312	LEFT TU 3
L MAIN TANK UNIT NO. 4	61.75	62.71	TS311	LEFT TU 4
L MAIN TANK UNIT NO. 5	60.70	61.60	TS310	LEFT TU 5
L MAIN TANK UNIT NO. 6	45.06	45.76	TS309	LEFT TU 6
L MAIN TANK UNIT NO. 7	41.20	41.80	TS308	LEFT TU 7
L MAIN TANK UNIT NO. 8	41.20	41.80	TS307	LEFT TU 8
L MAIN TANK UNIT NO. 9	36.86	37.44	TS306	LEFT TU 9
L MAIN TANK UNIT NO. 10	29.97	30.43	TS305	LEFT TU 10
L MAIN TANK UNIT NO. 11	32.72	33.13	TS304	LEFT TU 11
L MAIN TANK UNIT NO. 12	25.09	25.46	TS303	LEFT TU 12
L MAIN TANK UNIT NO. 13	26.83	27.22	TS302	LEFT TU 13
L MAIN TANK UNIT NO. 14	20.34	20.70	TS301	LEFT TU 14
R AUX TANK UNIT NO. 1	119.25	121.00	TS329	RCTR TU 5
R AUX TANK UNIT NO. 2	116.21	117.89	TS330	RCTR TU 6
R AUX TANK UNIT NO. 3	97.75	99.20	TS331	RCTR TU 7
R AUX TANK UNIT NO. 4	81.30	82.55	TS332	RCTR TU 8
R MAIN TANK UNIT NO. 1	93.71	95.04	TS335	RIGHT TU 1
R MAIN TANK UNIT NO. 2	83.04	84.21	TS336	RIGHT TU 2
R MAIN TANK UNIT NO. 3	68.08	69.12	TS337	RIGHT TU 3
R MAIN TANK UNIT NO. 4	61.75	62.71	TS338	RIGHT TU 4
R MAIN TANK UNIT NO. 5	60.70	61.60	TS339	RIGHT TU 5
R MAIN TANK UNIT NO. 6	45.06	45.76	TS340	RIGHT TU 6
R MAIN TANK UNIT NO. 7	41.20	41.80	TS341	RIGHT TU 7
R MAIN TANK UNIT NO. 8	41.20	41.80	TS342	RIGHT TU 8
R MAIN TANK UNIT NO. 9	36.86	37.44	TS343	RIGHT TU 9
R MAIN TANK UNIT NO. 10	29.97	30.43	TS344	RIGHT TU 10
R MAIN TANK UNIT NO. 11	32.72	33.13	TS345	RIGHT TU 11
R MAIN TANK UNIT NO. 12	25.09	25.46	TS346	RIGHT TU 12
R MAIN TANK UNIT NO. 13	26.83	27.22	TS347	RIGHT TU 13
R MAIN TANK UNIT NO. 14	20.34	20.70	TS348	RIGHT TU 14

Dry Capacitance Test in the Main Equipment Center (No Fuel in the Tank)
Figure 505

BOEING PROPRIETARY - Copyright (C) - Unpublished Work - See title page for details.

MEASUREMENT TANK UNIT	PROBE SELECT POSITION (E/E BAY)	PROBE SELECT POSITION (WING SPAR)	LO-Z TO HI-Z	LO-Z TO SHLD	LO-Z TO GND	HI-Z TO GND	HI-Z TO SHLD	SHLD TO GND
L MAIN TANK UNIT NO. 1	B	A						
L MAIN TANK UNIT NO. 2	C	B						
L MAIN TANK UNIT NO. 3	D	C						
L MAIN TANK UNIT NO. 4	E	D						
L MAIN TANK UNIT NO. 5	F	E						
L MAIN TANK UNIT NO. 6	G	F						
L MAIN TANK UNIT NO. 7	H	G						
L MAIN TANK UNIT NO. 8	I	H						
L MAIN TANK UNIT NO. 9	J	I						
L MAIN TANK UNIT NO. 10	K	J						
L MAIN TANK UNIT NO. 11	L	K						
L MAIN TANK UNIT NO. 12	M	L						
L MAIN TANK UNIT NO. 13	N	M						
L MAIN TANK UNIT NO. 14	O	N						
COMPENSATOR	A	O						

Insulation Resistance Values for the Left Main Tank Wiring
Figure 506

BOEING PROPRIETARY - Copyright (C) - Unpublished Work - See title page for details.

MEASUREMENT TANK UNIT	PROBE SELECT POSITION (E/E BAY)	PROBE SELECT POSITION (WING SPAR)	LO-Z TO HI-Z	LO-Z TO SHLD	LO-Z TO GND	HI-Z TO GND	HI-Z TO SHLD	SHLD TO GND
L AUX TANK UNIT NO. 1	A	A						
L AUX TANK UNIT NO. 2	B	B						
L AUX TANK UNIT NO. 3	C	C						
L AUX TANK UNIT NO. 4	D	D						
L AUX TANK UNIT NO. 5	J	E						
R AUX TANK UNIT NO. 1	E	A						
R AUX TANK UNIT NO. 2	F	B						
R AUX TANK UNIT NO. 3	H	C						
R AUX TANK UNIT NO. 4	I	D						
AUX TANK COMPENSATOR	G	E						

Insulation Resistance Values for the Left and Right Center Tank Wiring
Figure 507

BOEING PROPRIETARY - Copyright (C) - Unpublished Work - See title page for details.

MEASUREMENT TANK UNIT	PROBE SELECT POSITION (E/E BAY)	PROBE SELECT POSITION (WING SPAR)	LO-Z TO HI-Z	LO-Z TO SHLD	LO-Z TO GND	HI-Z TO GND	HI-Z TO SHLD	SHLD TO GND
R MAIN TANK UNIT NO. 1	B	A						
R MAIN TANK UNIT NO. 2	C	B						
R MAIN TANK UNIT NO. 3	D	C						
R MAIN TANK UNIT NO. 4	E	D						
R MAIN TANK UNIT NO. 5	F	E						
R MAIN TANK UNIT NO. 6	G	F						
R MAIN TANK UNIT NO. 7	H	G						
R MAIN TANK UNIT NO. 8	I	H						
R MAIN TANK UNIT NO. 9	J	I						
R MAIN TANK UNIT NO. 10	K	J						
R MAIN TANK UNIT NO. 11	L	K						
R MAIN TANK UNIT NO. 12	M	L						
R MAIN TANK UNIT NO. 13	N	M						
R MAIN TANK UNIT NO. 14	O	N						
COMPENSATOR	A	O						

Insulation Resistance Values for the Right Main Tank Wiring
Figure 508

BOEING PROPRIETARY - Copyright (C) - Unpublished Work - See title page for details.

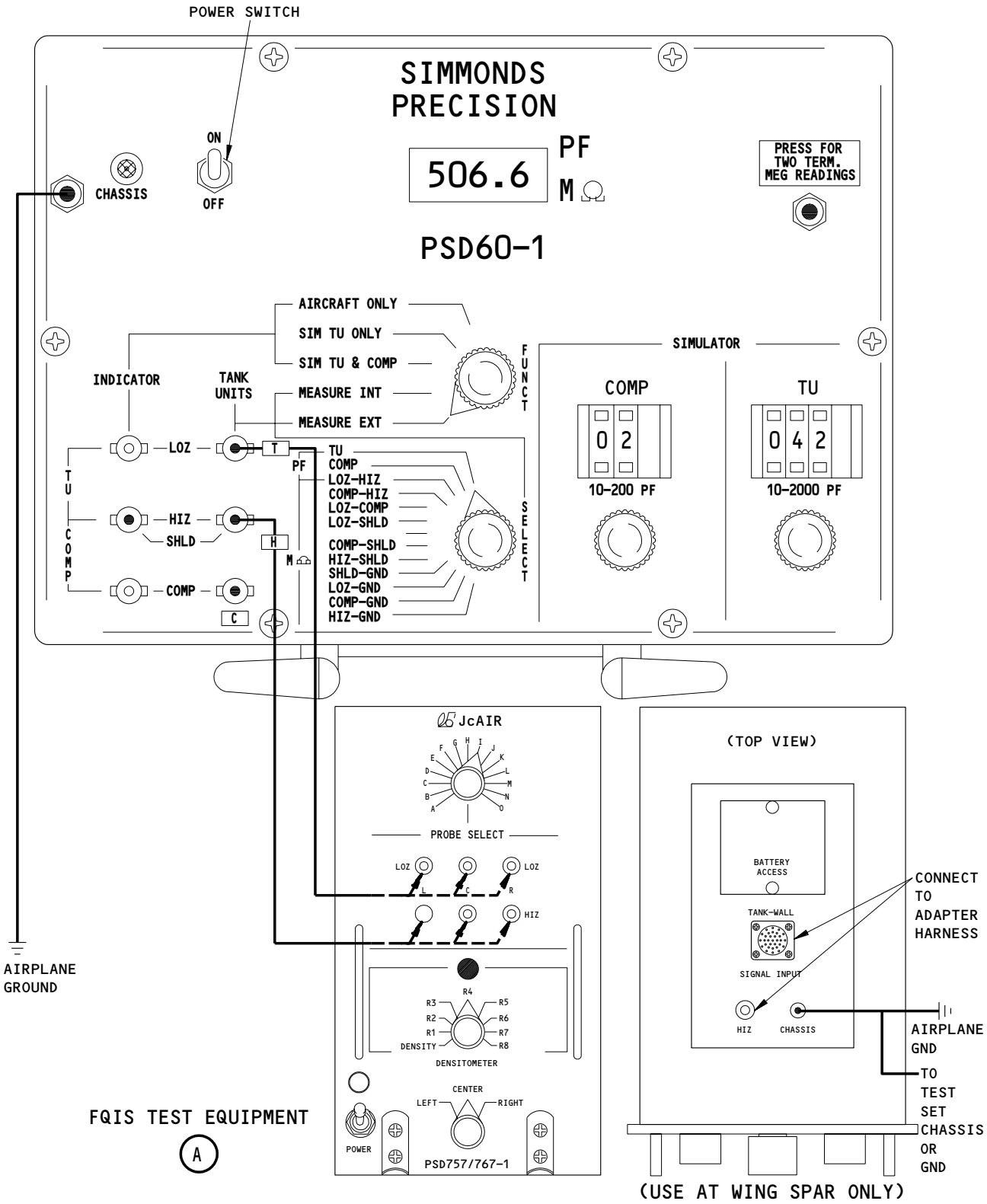

FQIS Test Equipment
Figure 509 (Sheet 1)

BOEING PROPRIETARY - Copyright (C) - Unpublished Work - See title page for details.

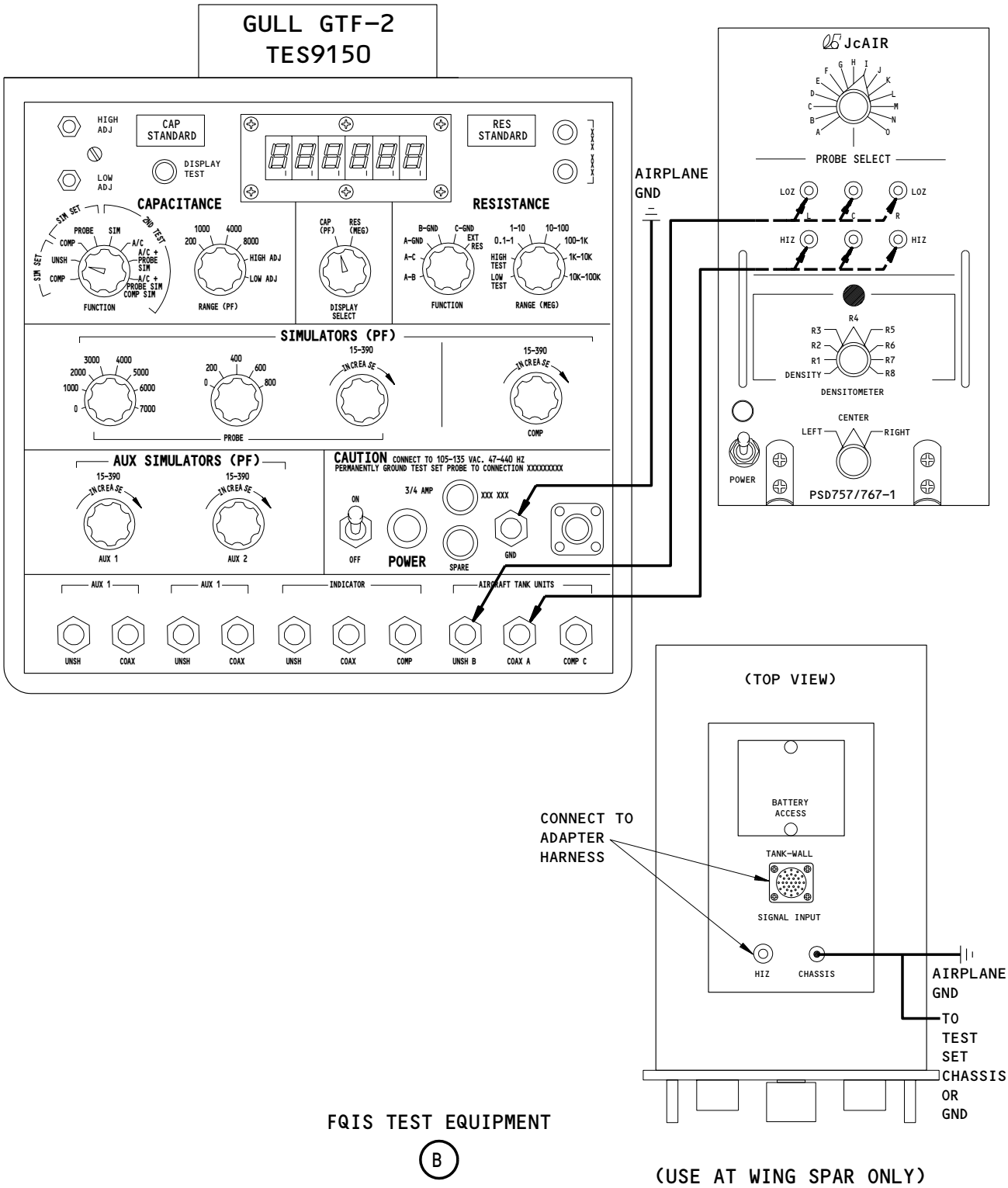

FQIS TEST EQUIPMENT

B

(USE AT WING SPAR ONLY)

FQIS Test Equipment
Figure 509 (Sheet 2)

EFFECTIVITY
SAS 052-149, 158-161, 168-999;
MTH 281-999

490869

BOEING PROPRIETARY - Copyright (C) - Unpublished Work - See title page for details.

D. Access
(1) Location Zones
119 Main Equipment Center (Left and Right)
521 Leading Edge to Front Spar (Left)

(2) Access Panels
119AL Electronics Access Door
521QB Fueling Station Door (Left)

E. Prepare for Checks

S 865-002-002
(1) Supply electrical power (AMM 24-22-00/201).

F. Check of the Load Select Indicators (Fig. 501)

S 015-003-002
(1) Open the fueling station door, 521QB (AMM 06-44-00/201).

S 215-005-002
(2) Make sure the fueling panel light comes on.

S 735-005-002
(3) Push and release the TEST IND switch on the fueling control panel.

S 215-007-002
(4) Make sure the upper and lower displays on all the load select indicators show 88.8.

S 215-009-002
(5) Make sure the lower display on each load select indicator goes back to its last indication.

S 215-010-002
(6) Make sure the upper display on each load select indicator shows the quantity of fuel in each fuel tank.

NOTE: If the message "-A.-", or "-b.-", or -A.b" show on the diplays refer to FIM 28-41-00/101, Figure 110. If the message "PUSH SEt " shows on the display refer to AMM 12-11-01/301.

S 415-011-002
(7) Close the fueling station door, 521QB (AMM 06-44-00/201).

S 865-013-002
(8) Remove electrical power, if it is not necesssary (AMM 24-22-00/201).

G. Check of the Flight Deck Indicators (Fig. 502)

S 215-014-002
(1) Make sure the six EICAS circuit breakers are closed.

BOEING PROPRIETARY - Copyright (C) - Unpublished Work - See title page for details.

S 865-015-002
(2) Push the ECS MSG switch on the EICAS MAINT panel on the right side panel, P61.

S 215-016-002
(3) Make sure the EICAS maintenance message, FUEL QTY BITE, does not show on the bottom display.

S 735-164-002
(4) Push the STATUS switch on the EICAS display select panel (found on top of the aisle stand).

S 735-017-002
(5) Push and release the FUEL QTY test switch on the right side panel, P61, to the FUEL QTY position.

NOTE: The upper and lower displays will go off for 4 seconds.

(a) Make sure the fuel quantity indicators on the overhead panel, P5, show 88.8.
(b) Make sure the total fuel quantity indicator on the P5 panel shows 188.8.
(c) Make sure the fuel temperature indicator on the P5 panel shows -188.
(d) Make sure the FUEL CONFIG light on the P5 panel comes on.
(e) Make sure the EICAS caution message, LOW FUEL, shows on the top display.
(f) Make sure the EICAS status message, FUEL QTY IND, shows on the the bottom display.
(g) Make sure the EICAS status message, FUEL QTY CHANNEL, shows on the bottom display.

S 215-020-002
(6) Make sure all the displays go back to their usual condition.

NOTE: If the message "-A.-", or "-b.-", or "-A.b" show on the displays, refer to FIM 28-41-00/101, Figure 111.

S 735-020-002
(7) Push and release the FUEL QTY test switch on the right side panel, P61, to the FUEL QTY position.

S 865-022-002
(8) Push and release the ECS MSG switch on the EICAS MAINT panel on the right side panel, P61.

S 215-023-002
(9) Make sure the EICAS maintenance message, FUEL QTY BITE, shows on the bottom display.

BOEING PROPRIETARY - Copyright (C) - Unpublished Work - See title page for details.

S 215-025-002

(10) Make sure all the displays go back to their normal condition.

H. Fuel Quantity BITE Procedure (Fig. 503)

S 415-026-002

(1) Close the fueling station door, 521QB, if it is open (AMM 06-44-00/201).

S 015-028-002

WARNING: MAKE SURE THE ELECTRONICS ACCESS DOOR (119AL) IS IN THE FULL OPEN POSITION. IF THE ELECTRONICS ACCESS DOOR IS NOT IN THE FULL OPEN POSITION, IT CAN ACCIDENTALLY MOVE AND CAUSE INJURY.

(2) Push the electronics access door, 119AL, to the full open position to engage the hold open detent (AMM 06-41-00/201).

S 015-029-002

(3) Go into the main equipment center.

NOTE: The FQIS Processor BITE Display Board will come on during airplane power-up. The menu will be inactive when you push the ON button on the Processor during this power-up condition. The power-up will last approximately 90 seconds.

S 495-029-002

(4) Install the E/E Access Hatch Safety Barrier across the opening in the electronics access door.

S 715-030-002

(5) FQIS "SELF TEST ?" procedure.
- (a) On the FQIS processor, push and release the "ON/OFF" button for a minimum of one second.
- (b) Make sure the FQIS processor display shows "Present Faults ?".
- (c) Continue to push and release the "NO" button until the "Self Test ?" message shows.
- (d) Push and release the "YES" button.
- (e) When the message "Begin Self Test ?" shows, push and release the "YES" button.

NOTE: The self test will use 90 seconds, and the message "Test In Progress" will show.

BOEING PROPRIETARY - Copyright (C) - Unpublished Work - See title page for details.

(f) Make sure the message "Test Complete Self Test Pass" shows on the display.

NOTE: If "Test Complete List Faults ?" shows on the display, push and release the "YES" button first and the "DOWN" button next to see the fault messages. Continue to push and release the "Down" button until all the fault messages are shown. Make a written record of the fault messages shown. Refer to FIM 28-41-00/101 for correction of the fault messages.

(g) Push and release the "Down" button.
(h) Make sure the message "End Of Self Test" shows on the display.
(i) Push and release the "ON/OFF" button.
(j) Make sure the FQIS processor display goes off.

S 415-031-002
(6) Go out of the main equipment center and close the electrical/electronics access door, 119AL (AMM 06-41-00/201).

I. Put the Airplane Back to Its Usual Condition.

S 865-032-002
(1) Remove electrical power if it is not necessary (AMM 24-22-00/201).

TASK 28-41-00-725-039-002

3. Comparison Check - Fuel Quantity Indicating System (FQIS) with the Fuel Measuring Sticks

A. References
(1) AMM 06-44-00/201, Wings Access Doors and Panels
(2) AMM 24-22-00/201, Electrical Power Control
(3) AMM 28-44-00/201, Fuel Measuring Sticks

B. Access
(1) Location Zones
521 Leading Edge to Front Spar (Left)
531 Center Auxiliary Tank (Left)
532 Main Tank - Inboard of Rib No. 10 (Left)
541 Main Tank - Outboard of Rib No. 10 (Left)
631 Center Auxiliary Tank (Right)
632 Main Tank - Inboard of Rib No. 10 (Right)
641 Main Tank - Outboard of Rib No. 10 (Right)

(2) Access Panel
521QB Fueling Station Door (Left)

BOEING PROPRIETARY - Copyright (C) - Unpublished Work - See title page for details.

C. Comparison Check of the Fuel Quantity Indicating System (FQIS) with the Fuel Measuring Sticks

S 865-040-002
(1) Supply electrical power (AMM 24-22-00/201).

S 015-041-002
(2) Open the fueling station door, 521QB (AMM 06-44-00/201).

S 975-043-002
(3) Use the fuel measuring sticks to calculate the fuel quantity for each fuel tank (AMM 28-44-00/201).

S 225-044-002
(4) Make sure the difference between the calculated fuel quantity (with the fuel measuring sticks) for each fuel tank and the fuel quantity shown on the load select indicators on the P28 panel and the fuel quantity indicator on the P5 panel is in the subsequent range:
(a) Main tank ±1110 lbs (± 503 kgs)
(b) Auxiliary tank ±2128 lbs (±999 kgs)

S 415-046-002
(5) Close the fueling station door, 521QB (AMM 06-44-00/201).

S 865-048-002
(6) Remove electrical power if it is not necessary (AMM 24-22-00/201).

TASK 28-41-00-735-049-002

4. System Test - Fuel Quantity Indicating System (Fig. 504, 505)

A. General

(1) This is the capacitance test to do a check on the tank units and compensators. This test is a dry capacitance test in the main equipment center (no fuel in the tank) that uses the FQIS Processor.

NOTE: When there is fuel in the tank you can do a check of the capacitance values for the tank units and the compensators at the FQIS processor. To do this check do the steps that follow (with fuel in the tank) and do a comparison check of the capacitance values "Left" and "Right" on the FQIS BITE Menu. The "Left" and "Right" capacitance values will be almost the same if the system is operating correctly.

B. References

(1) AMM 12-11-01/301, Fuel Tank Pressure Fueling
(2) AMM 24-22-00/201, Electrical Power Control

BOEING PROPRIETARY - Copyright (C) - Unpublished Work - See title page for details.

(3) AMM 28-11-00/201, Fuel Tanks
(4) AMM 28-26-00/201, Defueling
(5) AMM 28-41-08/401, FQIS Processor Unit

C. Access
(1) Location Zones
119 Main Equipment Center (Left and Right)
521 Leading Edge to Front Spar (Left)

(2) Access Panels
521QB Fueling Panel (Left)

D. Dry Capacitance Test in the Main Equipment Center (No Fuel in the Tank) (Fig. 504, 505)

S 655-099-002
(1) Defuel the applicable fuel tank (AMM 28-26-00/201).

S 655-100-002
(2) Drain and purge the applicable fuel tank (AMM 28-11-00/201).

S 015-100-002
(3) Go to the FQIS processor (AMM 28-41-08/401).

S 865-101-002
(4) Push and release the "ON/OFF" button on the FQIS Processor BITE display.

S 215-102-002
(5) Make sure the FQIS Processor shows "Present Faults ?" on the display.

S 865-103-002
(6) Continue to push and release the "NO" button until the message "System Data ?" shows on the display.

S 865-104-002
(7) Push and release the "YES button.

S 215-105-002
(8) Make sure the message "Uplift Data ?" shows on the display.

S 215-106-002
(9) Push and release the "NO" button.

S 215-107-002
(10) Make sure the message "Main Tanks Data ?" shows on the display.

BOEING PROPRIETARY - Copyright (C) - Unpublished Work - See title page for details.

S 865-108-002
(11) Push and release the "YES" button to see the left and right fuel tank data.

S 865-110-002
(12) Push and release the "Down" button until the message "Left HiZ Right" shows on the display.

S 975-110-002
(13) Make a written record of the capacitance values.

S 975-111-002
(14) Continue to push and release the "Down" button while you make a written record of the capacitance values.

S 865-112-002
(15) When the message "Center Data ?" shows on the display push and release the "YES" button.

S 865-113-002
(16) Push and release the "Down" button until the meassge "Center HiZ PF" shows on the display.

S 975-114-002
(17) Make a written record of the capacitance values.

S 975-115-002
(18) Continue to push and release the "Down" button while you make a written record of the capacitance values.

S 225-116-002
(19) When the message "End Of System Data" shows on the display make sure all of the capacitance values are within the limits in Figure 505.

S 865-117-002
(20) Push and release the "ON/OFF" button on the FQIS processor.

S 215-118-002
(21) Make sure the FQIS processor display is off.

NOTE: The FQIS processor will go off if no buttons are pushed in 10 minutes or less.

BOEING PROPRIETARY - Copyright (C) - Unpublished Work - See title page for details.

S 655-119-002
(22) Refuel the applicable fuel tank if no more test are necessary (AMM 12-11-01/301).

TASK 28-41-00-765-126-002

5. Insulation Resistance Test

A. General

(1) This task does a procedure for the measurement of insulation resistance for the FQIS wiring in the left main tank, the left and right auxiliary tank, and the right main tank. The insulation resistance of the in-tank and out-of-tank wiring are measured together in this procedure.

B. Equipment

(1) Fuel Quantity Test Set - PSD 40-1, or PSD 60-1, or PSD 60-2, or PSD 60-2R
Available from:
JcAir, Inc.
400 Industrial Parkway
Industrial Airport, KS 66031

(2) Test Box - PSD 757/767-1 - Available from JcAir, Inc.

C. References

(1) AMM 28-41-08/401, FQIS Processor Unit

D. Access

(1) Location Zones
119 Main Equipment Center (Left and Right)

E. Insulation Resistance Test Procedure

S 035-129-002
(1) Remove the fuel quantity processor unit (FQPU) (AMM 28-41-08/401).

S 485-130-002
(2) Install the fuel quantity test box (757/767-1) in the location of the fuel quantity processor unit in the E2-4 rack.

BOEING PROPRIETARY - Copyright (C) - Unpublished Work - See title page for details.

S 485-131-002
(3) Ground the test box to the airplane.

S 485-132-002
(4) Connect the fuel quantity test set to the HI-Z and LO-Z connectors on the FQIS test box for the left main tank.

S 485-133-002
(5) Connect the ground for the FQIS test set to the ground for the FQIS test box.

S 765-134-002
(6) Measure the resistance at each setting of the test set (LO-Z to HI-Z, LO-Z to SHLD, LO-Z to GND, HI-Z to GND, HI-Z to SHLD, SHLD to GND) for each of the tank units and the compensator in the left main tank.
(a) Make a written record of each resistance measurement.
(b) Make sure none of the resistance measurements is less than 20 megohms.

S 085-135-002
(7) Disconnect the fuel quantity test set from the HI-Z and LO-Z connectors on the FQIS test box for the left main tank.

S 485-136-002
(8) Connect the fuel quantity test set to the HI-Z and LO-Z connectors on the FQIS test box for the auxiliary fuel tank.

S 765-137-002
(9) Measure the resistance at each setting of the test set (LO-Z to HI-Z, LO-Z to SHLD, LO-Z to GND, HI-Z to GND, HI-Z to SHLD, SHLD to GND) for each of the tank units and the compensator in the auxiliary fuel tank.
(a) Make a written record of each resistance measurement.
(b) Make sure none of the resistance measurements is less than 20 megohms.

S 085-138-002
(10) Disconnect the fuel quantity test set to the HI-Z and LO-Z connectors on the FQIS test box for the auxiliary tank.

S 485-139-002
(11) Connect the fuel quantity test set to the HI-Z and LO-Z connectors on the FQIS test box for the right main tank.

BOEING PROPRIETARY - Copyright (C) - Unpublished Work - See title page for details.

S 765-140-002

(12) Measure the resistance at each setting of the test set (LO-Z to HI-Z, LO-Z to SHLD, LO-Z to GND, HI-Z to GND, HI-Z to SHLD, SHLD to GND) for each of the tank units and the compensator in the right main fuel tank.

(a) Make a written record of each resistance measurement.

(b) Make sure none of the resistance measurements is less than 20 megohms.

F. Put the Airplane Back to Its Usual Condition

S 085-141-002

(1) Disconnect the test set from the test box and the ground.

S 085-142-002

(2) Remove the test box (757/767-1) from its position in the E2-4 shelf.

S 435-128-002

(3) Install the fuel quantity processor unit again in its position in the E2-4 shelf (AMM 28-41-08/401).

TASK 28-41-00-765-150-002

6. Insulation Resistance Test

A. General

(1) This task has three procedures for the measurement of insulation resistance for FQIS wiring:

(a) Insulation resistance test for the left main tank.

(b) Insulation resistance test for the left and right auxiliary tank.

(c) Insulation resistance test for the right main tank.

(2) Each of these tests does a test of the insulation resistance for the in-tank wiring and the out-of-tank wiring together and then separately.

B. Equipment

(1) Adapter Harness, FQIS Wing Spar (one of these):

(a) P/N 370-044-001, Gull Airborne Instruments, Inc., Engineers Road, Smithtown, N.Y. 11787

NOTE: Use with fuel quantity test set Gull model GTF-2, P/N 361-012-001.

BOEING PROPRIETARY - Copyright (C) - Unpublished Work - See title page for details.

(b) P/N 101-00543, Barfield Instrument Corp.,
Miami, FL 33142

NOTE: Can be used with fuel quantity test set Barfield model 8000 or fuel quantity test set Gull model GTF-2, P/N 361-012-001.

(c) PSD 60-510/511 (P/N 55-0597-08)
JcAir, Inc.
400 Industrial Parkway
Industrial Airport, KS 66031

NOTE: Use with fuel quantity test set Simmonds P/N 472090-007, or P/N 472090-009, or PSD 40-1, 60-1, 60-2, or 60-2R

(2) Test Box, FQPU Breakout - PSD757/767-1
JcAir, Inc.,
400 Industrial Parkway
Industrial Airport, KS 66031

(3) Adapter Harness - PSD757/767-101 (Left/Right Main Fuel Tank)
JcAir, Inc.,
400 Industrial Parkway
Industrial Airport, KS 66031

(4) Adapter Harness - PSD757/767-102 (Center Fuel Tank)
JcAir, Inc.,
400 Industrial Parkway
Industrial Airport, KS 66031

(5) Test Set, FQIS Capcitance/Resistance (one of these):

(a) Model GTF-2, P/N 361-012-001, Gull Airborne Instruments, Inc.,
55 Engineers Road, Smithtown, N.Y. 11787

(b) Model 8000, Barfield Instrument Corp., Miami, FL 33142

(c) P/N 472090-007, or 472090-009, or PSD 40-1, 60-1, 60-2, or 60-2R
JcAir, Inc.,
400 Industrial Parkway
Industrial Airport, KS 66031

BOEING PROPRIETARY - Copyright (C) - Unpublished Work - See title page for details.

(6) Multimeter (for testing wiring out of the fuel tanks only)

C. References

(1) AMM 12-11-01/301, Fuel Tank Pressure Fueling
(2) AMM 24-22-00/201, Electrical Power Control
(3) AMM 27-81-00/201, Leading Edge Slats
(4) AMM 28-11-00/201, Fuel Tanks
(5) AMM 28-26-00/201, Defueling
(6) AMM 28-41-08/401, FQIS Processor
(7) AMM 28-41-09/401, FQIS Tank Wiring Harness

D. Access

(1) Location Zones

119	Main Equipment Center (Left and Right)
133	Center Wing Section (Left)
134	Center Wing Section (Right)
521	Leading Edge to Front Spar (Left)
621	Leading Edge to Front Spar (Right)

E. Prepare for the Insulation Resistance Test

S 655-151-002

(1) Defuel the applicable fuel tanks (AMM 28-26-00/201).

F. Insulation Resistance Test for the Left Main Tank

S 765-152-002

(1) Do these steps to do a test of the insulation resistance at the E/E bay:

NOTE: These steps measure the insulation resistance of the in-tank and out-of-tank wiring together.

(a) Remove the fuel quantity processor unit (FQPU) (AMM 28-41-08/401).
(b) Install the Test Box in the location of the FQPU in the E2-4 shelf.
(c) Connect the Test Set to the airplane ground.
(d) Connect the Test Set to the HI-Z and LO-Z connectors on the Test Box (FQPU Breakout) for the left main tank (Fig. 509).
(e) Put the power switches on the Test Box and Test Set to ON.
(f) Measure the resistance at each setting of the Test Set (LO-Z to HI-Z, LO-Z to SHLD, LO-Z to GND, HI-Z to GND, HI-Z to SHLD, SHLD to GND) for each of the tank units and the compensator in the left main tank (Fig. 506).

NOTE: Turn the PROBE SELECT switch on the Test Box to the corresponding position for each measurement.

1) Make a written record of each resistance measurement.

(g) Disconnect the test equipment.
(h) Remove the Test Box from the E2-4 shelf.
(i) Install the fuel quantity processor unit (FQPU) in the E2-4 shelf (AMM 28-41-08/401).

BOEING PROPRIETARY - Copyright (C) - Unpublished Work - See title page for details.

S 765-153-002

(2) Do these steps to do an insulation resistance test at the wing spar for the left main tank:

NOTE: These steps measure the insulation resistance of the in-tank wiring and equipment only.

(a) To get access to the HI-Z/LO-Z connector plug in the left main tank, remove the access panel 552GB (AMM 06-44-00/201).

(b) Connect the Test Box to the airplane ground (Fig. 509).

NOTE: Use the CHASSIS jack on the top of the Test Box.

(c) Connect the applicable Adapter Harness (part of the Test Box) to the SIGNAL connector and HIZ connector on the top of the Test Box.

(d) Disconnect the HI-Z/LO-Z plug at the wing spar (WDM 28-41-21).

1) Attach the HI-Z/LO-Z plug to the airplane structure to make it secure.

NOTE: This will prevent damage to the HI-Z/LO-Z plug and wiring while you do the test.

(e) Connect the Adapter Harness to the HI-Z/LO-Z receptacle at the wing spar (Fig. 504).

(f) Connect the Test Set CHASSIS or GND to the Test Box CHASSIS jack.

(g) Connect the Test Set to the HI-Z and LO-Z connectors on the Test Box (FQPU Breakout) for the left main tank (Fig. 509).

(h) Put the power switches on the test equipment to on.

(i) Measure the resistance at each setting of the Test Set (LO-Z to HI-Z, LO-Z to SHLD, LO-Z to GND, HI-Z to GND, HI-Z to SHLD, SHLD to GND) for each of the tank units and the compensator in the left main tank (Fig. 506).

NOTE: Turn the PROBE SELECT switch on the Test Box to the corresponding position for each measurement.

1) Make a written record of each resistance measurement.

(j) Disconnect the test equipment.

(k) Disconnect the Adapter Harness from the HI-Z/LO-Z receptacle at the wing spar.

(l) Connect the HI-Z/LO-Z plug at the wing spar again (WDM 28-41-21).

(m) Close the left access panel, 552GB.

BOEING PROPRIETARY - Copyright (C) - Unpublished Work - See title page for details.

S 765-154-002

(3) Do these steps use the insulation resistance test results to find problems:

(a) Do these checks of the insulation resistance values:

1) Minimum resistance check:

a) Make sure each resistance value is 20 megohms or more.

NOTE: Insulation resistance values of less than 20 megohms are shown as 0 megohms on PSD 40 and PSD 60 test units.

b) If one or more of the resistance values is less than 20 megohms, the applicable tank wiring harness can affect the FQIS system accuracy and should be replaced (AMM 28-41-09/401).

NOTE: Insulation resistance values less than 100 megohms can show a developing wire fault or degrading wiring. If the fuel quantity indicator is fluctuating and one or more of the insulation resistance values are less than 100 megohms, replacement of the applicable tank wiring harness may prevent subsequent problems.

2) Relative comparison resistance check:

NOTE: This check is a relative check. If a BITE message continues to show and the results of this test are negative, and all other troubleshooting recommendations have been tried, replacement of the applicable tank wiring harness may fix the problem.

a) Compare all wire resistance values to make sure that one or more values are not more than 20 percent lower in resistance than the other wires.

b) Replace the applicable tank wiring harness if the fault continues to show and all other fault isolation has been tried (AMM 28-41-09/401).

G. Insulation Resistance Test for the Left and Right Center Fuel Tank

S 765-156-002

(1) Do these steps to do an insulation resistance test at the E/E bay for the center fuel tank:

NOTE: These steps do a test of the insulation resistance of the out-of-tank wiring and the in-tank wiring together.

(a) Remove the fuel quantity FQIS processor unit (FQPU) (AMM 28-41-08/401).

BOEING PROPRIETARY - Copyright (C) - Unpublished Work - See title page for details.

(b) Install the Test Box in the location of the FQPU in the E2-4 shelf.
(c) Connect the Test Set to the airplane ground.
(d) Connect the Test Set to the HI-Z and LO-Z connectors on the Test Box (FQPU Breakout) for the center tank (Fig. 509).
(e) Measure the resistance at each setting of the Test Set (LO-Z to HI-Z, LO-Z to SHLD, LO-Z to GND, HI-Z to GND, HI-Z to SHLD, SHLD to GND) for each of the tank units and the compensator in the center tank (Fig. 507).

NOTE: Turn the PROBE SELECT switch on the Test Box to the corresponding position for each measurement.

1) Make a written record of each resistance measurement.
(f) Disconnect the test equipment.
(g) Remove the Test Box from the E2-4 shelf.
(h) Install the fuel quantity processor unit (FQPU) in the E2-4 shelf (AMM 28-41-08/401).

S 765-157-002
(2) Do these steps to do an insulation resistance test at the wing spar for the center fuel tank:

NOTE: These steps do an insulation test of the in-tank wiring and equipment only.

WARNING: MAKE SURE THAT THE DOWNLOCKS ARE INSTALLED IN ALL OF THE LANDING GEAR. WITHOUT THE DOWNLOCKS, THE LANDING GEAR CAN RETRACT AND CAUSE INJURIES TO PERSONS AND DAMAGE TO EQUIPMENT.

(a) Make sure the downlocks are installed in the nose and main landing gear (AMM 32-00-20/201).
(b) Connect the Test Box to the airplane ground (Fig. 509).

NOTE: Use the CHASSIS jack on the top of the Test Box.

(c) Connect the applicable Adapter Harness (part of the Test Box) to the SIGNAL connector and HIZ connector on the top of the Test Box.
(d) Disconnect the left and right auxiliary HI-Z/LO-Z plugs at the wing spar (WDM 28-41-23).
1) Attach the HI-Z/LO-Z plugs to the airplane structure to make them secure.

NOTE: This will prevent damage to the HI-Z/LO-Z plugs and wiring while you do the test.

(e) Connect the Adapter Harness to the HI-Z/LO-Z receptacle for the left auxiliary tank at the wing spar (Fig. 504).

BOEING PROPRIETARY - Copyright (C) - Unpublished Work - See title page for details.

(f) Put the power switches on the test equipment to on.
(g) Measure the resistance at each setting of the Test Set (LO-Z to HI-Z, LO-Z to SHLD, LO-Z to GND, HI-Z to GND, HI-Z to SHLD, SHLD to GND) for each of the tank units in the left auxiliary tank (Fig. 507).

NOTE: Turn the PROBE SELECT switch on the Test Box to the corresponding position for each measurement.

1) Make a written record of each resistance measurement.
(h) Disconnect the Adapter Harness from the HI-Z/LO-Z receptacle for the left auxiliary tank at the wing spar (Fig. 504).
(i) Connect the left auxiliary HI-Z/LO-Z plug at the wing spar again (WDM 28-41-23).
(j) Connect the Adapter Harness to the HI-Z/LO-Z receptacle for the right auxiliary tank at the wing spar (Fig. 504).
(k) Measure the resistance at each setting of the Test Set (LO-Z to HI-Z, LO-Z to SHLD, LO-Z to GND, HI-Z to GND, HI-Z to SHLD, SHLD to GND) for each of the tank units and the compensator in the right auxiliary tank (Fig. 507).

NOTE: Turn the PROBE SELECT switch on the Test Box to the corresponding position for each measurement.

1) Make a written record of each resistance measurement.
(l) Disconnect the Adapter Harness from the HI-Z/LO-Z receptacle for the right auxiliary tank at the wing spar (Fig. 504).
(m) Connect the right auxiliary HI-Z/LO-Z plug at the wing spar again (WDM 28-41-23).

S 765-158-002
(3) Do these steps use the insulation resistance test results to find problems:
(a) Do these checks of the insulation resistance values:
1) Minimum resistance check:
a) Make sure each resistance value is 20 megohms or more.

NOTE: Insulation resistance values of less than 20 megohms are shown as 0 megohms on PSD 40 and PSD 60 test units.

BOEING PROPRIETARY - Copyright (C) - Unpublished Work - See title page for details.

b) If one or more of the resistance values is less than 20 megohms, the applicable tank wiring harness can affect the FQIS system accuracy and should be replaced (AMM 28-41-09/401).

NOTE: Insulation resistance values less than 100 megohms can show a developing wire fault or degrading wiring. If the fuel quantity indicator is fluctuating and one or more of the insulation resistance values are less than 100 megohms, replacement of the applicable tank wiring harness may prevent subsequent problems.

2) Relative comparison resistance check:

NOTE: This check is a relative check. If a BITE message continues to show and the results of this test are negative, and all other troubleshooting recommendations have been tried, replacement of the applicable tank wiring harness may fix the problem.

a) Compare all wire resistance values to make sure that one or more values are not more than 20 percent lower in resistance than the other wires.
b) Replace the applicable tank wiring harness if the fault continues to show and all other fault isolation has been tried (AMM 28-41-09/401).

H. Insulation Resistance Test for the Right Main Tank

S 765-160-002

(1) Do these steps to do an insulation resistance test at the E/E bay for the right main tank:

NOTE: These steps do an insulation resistance test of the out-of-tank and the in-tank wiring together.

(a) Remove the fuel quantity processor unit (FQPU) (AMM 28-41-08/401).
(b) Install the Test Box in the location of the FQPU in the E2-4 shelf.
(c) Connect the Test Set to the airplane ground.
(d) Connect the Test Set to the HI-Z and LO-Z connectors on the Test Box (FQPU Breakout) for the right main tank (Fig. 509).
(e) Put the power switches on the Test Box and Test Set to on.

BOEING PROPRIETARY - Copyright (C) - Unpublished Work - See title page for details.

(f) Measure the resistance at each setting of the Test Set (LO-Z to HI-Z, LO-Z to SHLD, LO-Z to GND, HI-Z to GND, HI-Z to SHLD, SHLD to GND) for each of the tank units and the compensator in the right main tank (Fig. 508).

NOTE: Turn the PROBE SELECT switch on the Test Box to the corresponding position for each measurement.

1) Make a written record of each resistance measurement.

(g) Disconnect the test equipment.

(h) Remove the Test Box from the E2-4 shelf.

(i) Install the fuel quantity processor unit (FQPU) in the E2-4 shelf (AMM 28-41-08/401).

(j) Ground the Test Box to the airplane.

(k) Connect the Test Set to the HI-Z and LO-Z connectors on the Test Box (FQPU Breakout) for the right main tank (Fig. 504).

(l) Connect the ground for the Test Set to the ground for the Test Box (FQPU Breakout).

(m) Measure each of the resistances shown in Fig. 508 and make a written record of these resistances.

S 765-161-002

(2) Do these steps to do an insulation resistance test at the wing spar for the right main tank:

NOTE: These steps do an insulation test of the in-tank wiring and equipment only.

(a) To get access to the HI-Z/LO-Z connector plug in the right main tank, remove the access panel 652HB (AMM 06/44-00/201).

(b) Connect the Test Box to the airplane ground (Fig. 509).

NOTE: Use the CHASSIS jack on the top of the Test Box.

(c) Connect the applicable Adapter Harness (part of the Test Box) to the SIGNAL connector and HIZ connector on the top of the Test Box.

(d) Disconnect the HI-Z/LO-Z plug for the right main tank at the wing spar (Fig. 504) (WDM 28-41-22).

1) Attach the HI-Z/LO-Z plug to the airplane structure to make it secure.

NOTE: This will prevent damage to the HI-Z/LO-Z plug and wiring while you do the test.

(e) Connect the Adapter Harness to the HI-Z/LO-Z receptacle at the wing spar.

(f) Connect the Test Set CHASSIS or GND to the Test Box CHASSIS jack.

(g) Connect the Test Set to the HI-Z and LO-Z connectors on the Test Box (FQPU Breakout) for the right main tank (Fig. 509).

BOEING PROPRIETARY - Copyright (C) - Unpublished Work - See title page for details.

(h) Put the power switches on the test equipment to on.
(i) Measure the resistance at each setting of the Test Set (LO-Z to HI-Z, LO-Z to SHLD, LO-Z to GND, HI-Z to GND, HI-Z to SHLD, SHLD to GND) for each of the tank units and the compensator in the right main tank (Fig. 508).

NOTE: Turn the PROBE SELECT switch on the Test Box to the corresponding position for each measurement.

1) Make a written record of each resistance measurement.
(j) Disconnect the test equipment.
(k) Disconnect the Adapter Harness from the HI-Z/LO-Z receptacle at the wing spar.
(l) Connect the HI-Z/LO-Z plug at the wing spar again (WDM 28-41-22).
(m) Close the right access panel, 652HB (AMM 06-44-00/201).

S 765-162-002
(3) Do these steps use the insulation resistance test results to find problems:
(a) Do these checks of the insulation resistance values:
1) Minimum resistance check:
a) Make sure each resistance value is 20 megohms or more.

NOTE: Insulation resistance values of less than 20 megohms are shown as 0 megohms on PSD 40 and PSD 60 test units.

b) If one or more of the resistance values is less than 20 megohms, the applicable tank wiring harness can affect the FQIS system accuracy and should be replaced (AMM 28-41-09/401).

NOTE: Insulation resistance values less than 100 megohms can show a developing wire fault or degrading wiring. If the fuel quantity indicator is fluctuating and one or more of the insulation resistance values are less than 100 megohms, replacement of the applicable tank wiring harness may prevent subsequent problems.

BOEING PROPRIETARY - Copyright (C) - Unpublished Work - See title page for details.

2) Relative comparison resistance check:

NOTE: This check is a relative check. If a BITE message continues to show and the results of this test are negative, and all other troubleshooting recommmendations have been tried, replacement of the applicable tank wiring harness may fix the problem.

a) Compare all wire resistance values to make sure that one or more values are not more than 20 percent lower in resistance than the other wires.
b) Replace the applicable tank wiring harness if the fault continues to show and all other fault isolation has been tried (AMM 28-41-09/401).

TASK 28-41-00-715-184-002

7. Operational Test - Fuel Configuration Warning System

A. General
(1) This is a scheduled maintenance task.
(2) This task has:
(a) A check of the flight deck indicators.
(b) A fuel quantity BITE check of the FQIS processor.

B. Equipment
(1) E/E Acess Hatch Safety Barrier - A53002-5

C. References
(1) AMM 06-41-00/201, Fuselage Access Doors and Panels
(2) AMM 06-44-00/201, Wings Access Doors and Panels
(3) AMM 24-22-00/201, Electrical Power Control

D. Access
(1) Location Zones
119 Main Equipment Center (Left and Right)
211 Control Cabin (Left)
212 Control Cabin (Right)
(2) Access Panels
119AL Electronics Access Door

BOEING PROPRIETARY - Copyright (C) - Unpublished Work - See title page for details.

E. Prepare for Procedure

S 865-185-002
(1) Supply electrical power (AMM 24-22-00/201).

F. Check of the Flight Deck Indicators (Fig. 502)

S 215-165-002
(1) Make sure the six EICAS circuit breakers are closed.

S 865-166-002
(2) Push the ECS MSG switch on the EICAS MAINT panel on the right side panel, P61.

S 215-167-002
(3) Make sure the EICAS maintenance message, FUEL QTY BITE, does not show on the bottom display.

S 735-168-002
(4) Push the STATUS switch on the EICAS display select panel (found on top of the aisle stand).

S 735-169-002
(5) Push and release the FUEL QTY test switch on the right side panel, P61, to the FUEL QTY position.

NOTE: The upper and lower displays will go off for 4 seconds.

(a) Make sure the fuel quantity indicators on the overhead panel, P5, show 88.8.
(b) Make sure the total fuel quantity indicator on the P5 panel shows 188.8.
(c) Make sure the fuel temperature indicator on the P5 panel shows -188.
(d) Make sure the FUEL CONFIG light on the P5 panel comes on.
(e) Make sure the EICAS caution message, LOW FUEL, shows on the top display.
(f) Make sure the EICAS status message, FUEL QTY IND, shows on the the bottom display.
(g) Make sure the EICAS status message, FUEL QTY CHANNEL, shows on the bottom display.

S 215-170-002
(6) Make sure all the displays go back to their usual condition.

NOTE: If the message "-A.-", or "-b.-", or "-A.b" show on the displays, refer to FIM 28-41-00/101, Figure 111.

S 735-171-002
(7) Push and release the FUEL QTY test switch on the right side panel, P61, to the FUEL QTY position.

BOEING PROPRIETARY - Copyright (C) - Unpublished Work - See title page for details.

S 865-172-002
(8) Push and release the ECS MSG switch on the EICAS MAINT panel on the right side panel, P61.

S 215-173-002
(9) Make sure the EICAS maintenance message, FUEL QTY BITE, shows on the bottom display.

S 215-174-002
(10) Make sure all the displays go back to their normal condition.

G. Fuel Quantity BITE Procedure (Fig. 503)

S 415-175-002
(1) Close the fueling station door, 521QB, if it is open (AMM 06-44-00/201).

S 015-178-002

WARNING: MAKE SURE THE ELECTRONICS ACCESS DOOR (119AL) IS IN THE FULL OPEN POSITION. IF THE ELECTRONICS ACCESS DOOR IS NOT IN THE FULL OPEN POSITION, IT CAN ACCIDENTALLY MOVE AND CAUSE INJURY.

(2) Push the electronics access door, 119AL, to the full open position to engage the hold open detent (AMM 06-41-00/201).

S 015-179-002
(3) Go into the main equipment center.

NOTE: The FQIS Processor BITE Display Board will come on during airplane power-up. The menu will be inactive when you push the ON button on the Processor during this power-up condition. The power-up will last approximately 90 seconds.

S 495-180-002
(4) Install the E/E Access Hatch Safety Barrier across the opening in the electronics access door.

S 715-181-002
(5) FQIS "SELF TEST ?" procedure.
(a) On the FQIS processor, push and release the "ON/OFF" button for a minimum of one second.
(b) Make sure the FQIS processor display shows "Present Faults ?".
(c) Continue to push and release the "NO" button until the "Self Test ?" message shows.
(d) Push and release the "YES" button.

BOEING PROPRIETARY - Copyright (C) - Unpublished Work - See title page for details.

(e) When the message "Begin Self Test ?" shows, push and release the "YES" button.

NOTE: The self test will use 90 seconds, and the message "Test In Progress" will show.

(f) Make sure the message "Test Complete Self Test Pass" shows on the display.

NOTE: If "Test Complete List Faults ?" shows on the display, push and release the "YES" button first and the "DOWN" button next to see the fault messages. Continue to push and release the "Down" button until all the fault messages are shown. Make a written record of the fault messages shown. Refer to FIM 28-41-00/101 for correction of the fault messages.

(g) Push and release the "Down" button.
(h) Make sure the message "End Of Self Test" shows on the display.
(i) Push and release the "ON/OFF" button.
(j) Make sure the FQIS processor display goes off.

S 415-182-002
(6) Go out of the main equipment center and close the electrical/electronics access door, 119AL (AMM 06-41-00/201).

H. Put the Airplane Back to Its Usual Condition.

S 865-183-002
(1) Remove electrical power if it is not necessary (AMM 24-22-00/201).

BOEING PROPRIETARY - Copyright (C) - Unpublished Work - See title page for details.

FQIS TANK UNIT - REMOVAL/INSTALLATION

1. General
   A. Fourteen tank units are installed in each main fuel tank. The left and right compartments of the auxiliary fuel tank each contain four tank units. The center compartment of the auxiliary fuel tank contains one tank unit.
   B. All tank units are almost the same but their length is different. The length of the tank unit changes with the fuel tank depth at each location.

TASK 28-41-01-004-001-001

2. Remove the Tank Unit
   A. References
      (1) AMM 28-11-00/201, Fuel Tank (Purging and Entry)
      (2) AMM 28-11-01/401, Main Tank Access Door
      (3) AMM 28-11-02/401, Auxiliary Tank Access Door
      (4) AMM 28-26-00/201, Defueling
   B. Access
      (1) Location Zones

133	Wing Center Section (Left)
134	Wing Center Section (Right)
531	Center Auxiliary Tank (Left)
532	Main Tank - Inboard of Rib No. 10 (Left)
541	Main Tank - Outboard of Rib No. 10 (Left)
631	Center Auxiliary Tank (Right)
632	Main Tank - Inboard of Rib No. 10 (Right)
641	Main Tank - Outboard of Rib No. 10 (Right)

   C. Procedure

      S 654-002-001
      (1) Defuel the applicable fuel tank (AMM 28-26-00/201).

      S 654-003-001
      (2) Drain and purge the applicable fuel tank (AMM 28-11-00/201).

      S 014-004-001
      (3) To remove a tank unit in the left or right main fuel tank, remove the main tank access door nearest to the tank unit (Fig. 402) (AMM 28-11-01/401).

      S 014-005-001
      (4) To remove a tank unit in the auxiliary fuel tank, remove the auxiliary tank access door nearest to the tank unit (Fig. 402) (AMM 28-11-02/401).

BOEING PROPRIETARY - Copyright (C) - Unpublished Work - See title page for details.

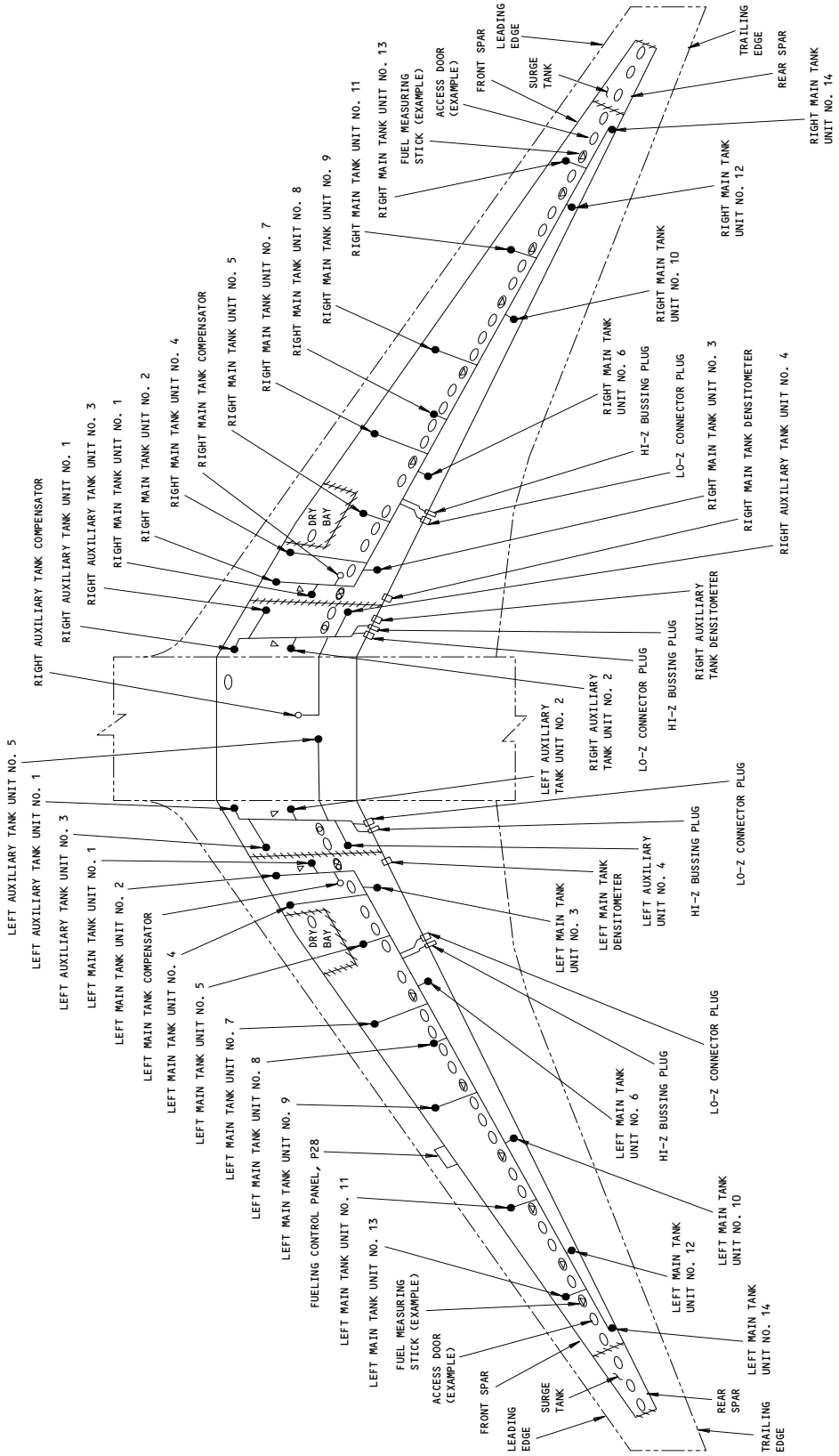

FQIS Tank Unit Installation
Figure 401 (Sheet 1)

A31806

BOEING PROPRIETARY - Copyright (C) - Unpublished Work - See title page for details.

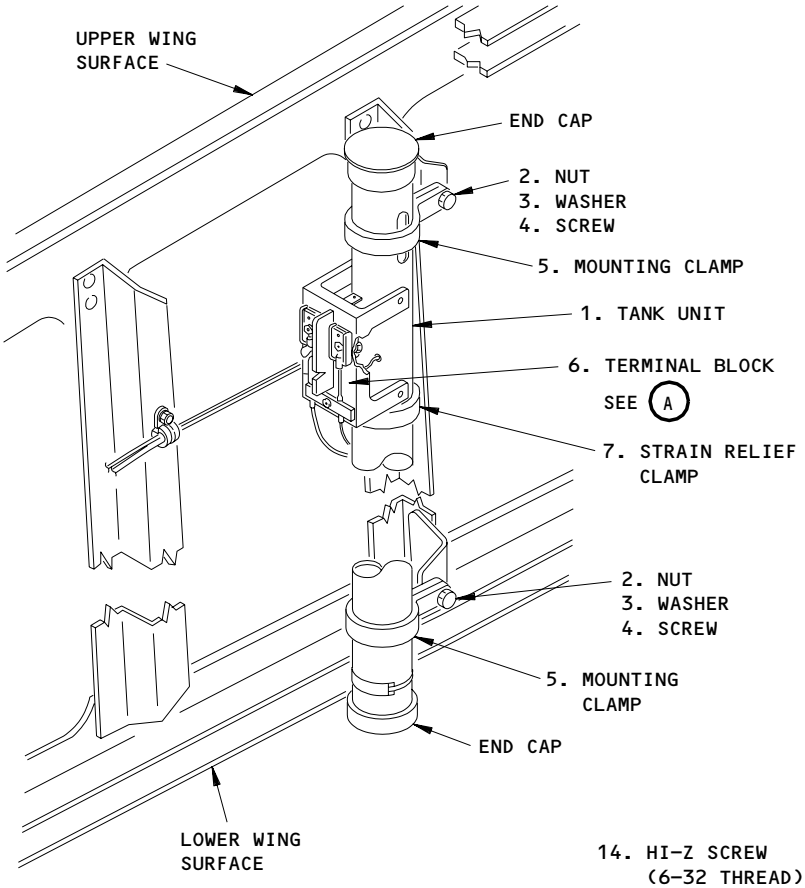

TANK UNIT INSTALLATION
(EXAMPLE)

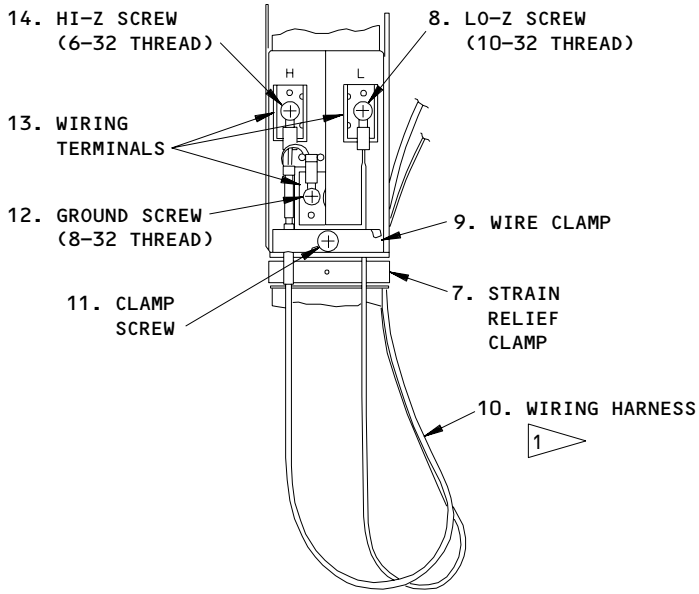

TERMINAL BLOCK
A

1 ADJUST WIRE SLACK TO MAINTAIN A CLEARANCE OF 0.5 INCH BETWEEN WIRE AND COMPONENTS OR STRUCTURE.
IF 0.5 INCH CLEARANCE IS NOT POSSIBLE YOU MUST MAINTAIN A MINIMUM OF 0.125 INCH.

FQIS Tank Unit Installation
Figure 401 (Sheet 2)

BOEING PROPRIETARY - Copyright (C) - Unpublished Work - See title page for details.

TANK UNIT	EQUIPMENT NUMBER	TANK ACCESS DOOR
L AUX TANK UNIT NO. 1	TS319	531BB
L AUX TANK UNIT NO. 2	TS318	531BB
L AUX TANK UNIT NO. 3	TS317	531BB
L AUX TANK UNIT NO. 4	TS316	531BB
L AUX TANK UNIT NO. 5	TS320	136KZ, 134AZ
L MAIN TANK UNIT NO. 1	TS314	532BB
L MAIN TANK UNIT NO. 2	TS313	532BB
L MAIN TANK UNIT NO. 3	TS312	532BB
L MAIN TANK UNIT NO. 4	TS311	532BB
L MAIN TANK UNIT NO. 5	TS310	532FB
L MAIN TANK UNIT NO. 6	TS309	541BB
L MAIN TANK UNIT NO. 7	TS308	541CB
L MAIN TANK UNIT NO. 8	TS307	541EB
L MAIN TANK UNIT NO. 9	TS306	541HB
L MAIN TANK UNIT NO. 10	TS305	541KB
L MAIN TANK UNIT NO. 11	TS304	541PB
L MAIN TANK UNIT NO. 12	TS303	541TB
L MAIN TANK UNIT NO. 13	TS302	541VB
L MAIN TANK UNIT NO. 14	TS301	541XB
R AUX TANK UNIT NO. 1	TS329	631BB
R AUX TANK UNIT NO. 2	TS330	631BB
R AUX TANK UNIT NO. 3	TS331	631BB
R AUX TANK UNIT NO. 4	TS332	631BB
R MAIN TANK UNIT NO. 1	TS335	632BB
R MAIN TANK UNIT NO. 2	TS336	632BB
R MAIN TANK UNIT NO. 3	TS337	632BB
R MAIN TANK UNIT NO. 4	TS338	632BB
R MAIN TANK UNIT NO. 5	TS339	632FB
R MAIN TANK UNIT NO. 6	TS340	641BB
R MAIN TANK UNIT NO. 7	TS341	641CB
R MAIN TANK UNIT NO. 8	TS342	641EB
R MAIN TANK UNIT NO. 9	TS343	641HB
R MAIN TANK UNIT NO. 10	TS344	641KB
R MAIN TANK UNIT NO. 11	TS345	641PB
R MAIN TANK UNIT NO. 12	TS346	641TB
R MAIN TANK UNIT NO. 13	TS347	641VB
R MAIN TANK UNIT NO. 14	TS348	641XB

FQIS Tank Unit Equipment Number and Access
Figure 402

BOEING PROPRIETARY - Copyright (C) - Unpublished Work - See title page for details.

S 864-006-001
(5) Open this circuit breaker on the main power distribution panel, P6, and attach a DO-NOT-CLOSE tag:
(a) 6E4, FUELING QTY

S 864-007-001
(6) Open these circuit breakers on the overhead circuit breaker panel, P11, and attach DO-NOT-CLOSE tags:
(a) 11C34, FUEL QTY 1
(b) 11M19, FUEL QTY 2

S 864-008-001
(7) Open this circuit breaker on APU external power panel, P34, and attach a DO-NOT-CLOSE tag:
(a) 34L2, FUEL QTY REFUEL

S 944-009-001

WARNING: OBEY THE FUEL TANK ENTRY PRECAUTIONS. FAILURE TO OBEY THE FUEL TANK ENTRY PRECAUTIONS COULD CAUSE INJURY TO PERSONS OR DAMAGE TO EQUIPMENT.

(8) Obey the fuel tank entry precautions (AMM 28-11-00/201).

S 014-010-001
(9) Go into the fuel tank.

S 034-011-001
(10) Disconnect the wiring terminals (13) from the tank unit (1) (View B, Fig. 401).

S 034-012-001
(11) Loosen the wire clamp (9) on the terminal block (6) of the tank unit.

S 034-013-001
(12) Open the strain relief clamp (7).

S 034-014-001
(13) Move the wiring (10) away from the tank unit (1).

S 034-015-001
(14) Remove the screws (4), washers (3), and nuts (2) that attach the mounting clamps (5) of the tank unit at the top and bottom of the fuel tank (View A, Fig. 401).

BOEING PROPRIETARY - Copyright (C) - Unpublished Work - See title page for details.

S 024-016-001

(15) Remove the tank unit (1).

TASK 28-41-01-404-017-001

3. Install the Tank Unit

A. References

(1) AMM 12-11-01/301, Fuel Tank Pressure Fueling
(2) AMM 24-22-00/201, Electrical Power Control
(3) AMM 28-11-00/201, Fuel Tank (Purging and Entry)
(4) AMM 28-11-01/401, Main Tank Access Door
(5) AMM 28-11-02/401, Auxiliary Tank Access Door
(6) AMM 28-41-00/501, Fuel Quantity Indicating System (FQIS)
(7) SWPM 20-10-11, Installation of Electrical Wires and Harnesses
(8) SWPM 20-10-12, Wire Harness Supports
(9) SWPM 20-10-19, Wire Separation

B. Access

(1) Location Zones

133 Wing Center Section (Left)
134 Wing Center Section (Right)
531 Center Auxiliary Tank (Left)
532 Main Tank - Inboard of Rib No. 10 (Left)
541 Main Tank - Outboard of Rib No. 10 (Left)
631 Center Auxiliary Tank (Right)
632 Main Tank - Inboard of Rib No. 10 (Right)
641 Main Tank - Outboard of Rib No. 10 (Right)

C. Procedure

S 944-018-001

WARNING: OBEY THE FUEL TANK ENTRY PRECAUTIONS. FAILURE TO OBEY THE FUEL TANK ENTRY PRECAUTIONS COULD CAUSE INJURY TO PERSONS OR DAMAGE TO EQUIPMENT.

(1) Obey the fuel tank entry precautions (AMM 28-11-00/201).

BOEING PROPRIETARY - Copyright (C) - Unpublished Work - See title page for details.

S 424-019-001
(2) Put the tank unit (1) in position.

S 034-020-001
(3) Install the screws (4), washers (3), and nuts (2).

S 224-021-001
(4) Make sure that the distance between the tank unit (1) and airplane structure is a minimum of 0.1 inch.

NOTE: The recommended distance between the tank unit (1) and airplane structure is 0.5 inch.

S 434-022-001
(5) Connect the wiring terminals (13) to the terminal block (6) of the tank unit (View B, Fig. 401).

S 434-023-001
(6) Install the screws (8, 12, 14).

NOTE: The screws are different sizes to prevent errors in connection.

S 434-024-001
(7) Put the wiring (10) in position.

S 434-025-001
(8) Tighten the wire clamp (9) on the terminal block (6).

S 434-026-001
(9) Close the strain relief clamp (7) (SWPM 20-10-11, SWPM 20-10-12, SWPM 20-10-19).

NOTE: Adjust wire slack to maintain a clearance of 0.5 inch between wire and components or structure. If 0.5 inch clearance is not possible, you must maintain a minimum of 0.125 inch clearance.

BOEING PROPRIETARY - Copyright (C) - Unpublished Work - See title page for details.

S 414-027-001

CAUTION: MAKE SURE YOU REMOVE ALL EQUIPMENT, MATERIALS AND UNWANTED PARTICLES FROM IN THE FUEL TANK. UNWANTED MATERIALS CAN BLOCK THE PUMPS AND PREVENT THE SCAVENGE OF FUEL.

(10) If you installed a tank unit (1) in a main fuel tank, install the applicable main tank access door (Fig. 402) (AMM 28-11-01/401).

S 414-028-001

(11) If you installed a tank unit (1) in the auxiliary fuel tank, install the applicable auxiliary tank access door (Fig. 402) (AMM 28-11-02/401).

S 864-029-001

(12) Remove the DO-NOT-CLOSE tag and close this circuit breaker on the P6 panel:
(a) 6E4, FUELING QTY

S 864-030-001

(13) Remove the DO-NOT-CLOSE tags and close these circuit breakers on the P11 panel:
(a) 11C34, FUEL QTY 1
(b) 11M19, FUEL QTY 2

S 864-031-001

(14) Remove the DO-NOT-CLOSE tag and close this circuit breaker on the P34 panel:
(a) 34L2, FUEL QTY REFUEL

S 864-032-001

(15) Supply electrical power (AMM 24-22-00/201).

S 744-033-001

(16) Do the Fuel Quantity BITE Procedure (AMM 28-41-00/501).

BOEING PROPRIETARY - Copyright (C) - Unpublished Work - See title page for details.

S 654-034-001
(17) Refuel the applicable fuel tank if no more work is necessary (AMM 12-11-01/301).

S 864-035-001
(18) Remove electrical power if it is not necessary (AMM 24-22-00/201).

BOEING PROPRIETARY - Copyright (C) - Unpublished Work - See title page for details.

FQIS TANK UNIT - REMOVAL/INSTALLATION

1. General
   A. Fourteen tank units are installed in each main fuel tank. The left and right compartments of the auxiliary fuel tank each contain four tank units. The center compartment of the auxiliary fuel tank contains one tank unit.
   B. All tank units are almost the same but their length is different. The length of the tank unit changes with the fuel tank depth at each location.

TASK 28-41-01-004-036-002

2. Remove the Tank Unit
   A. References
      (1) AMM 28-11-00/201, Fuel Tank (Purging and Entry)
      (2) AMM 28-11-01/401, Main Tank Access Door
      (3) AMM 28-11-02/401, Auxiliary Tank Access Door
      (4) AMM 28-26-00/201, Defueling
   B. Access
      (1) Location Zones

133	Wing Center Section (Left)
134	Wing Center Section (Right)
531	Center Auxiliary Tank (Left)
532	Main Tank - Inboard of Rib No. 10 (Left)
541	Main Tank - Outboard of Rib No. 10 (Left)
631	Center Auxiliary Tank (Right)
632	Main Tank - Inboard of Rib No. 10 (Right)
641	Main Tank - Outboard of Rib No. 10 (Right)

   C. Procedure

      S 654-002-002
      (1) Defuel the applicable fuel tank (AMM 28-26-00/201).

      S 654-003-002
      (2) Drain and purge the applicable fuel tank (AMM 28-11-00/201).

      S 014-004-002
      (3) To remove a tank unit in the left or right main fuel tank, remove the main tank access door nearest to the tank unit (Fig. 402) (AMM 28-11-01/401).

      S 014-005-002
      (4) To remove a tank unit in the auxiliary fuel tank, remove the auxiliary tank access door nearest to the tank unit (Fig. 402) (AMM 28-11-02/401).

BOEING PROPRIETARY - Copyright (C) - Unpublished Work - See title page for details.

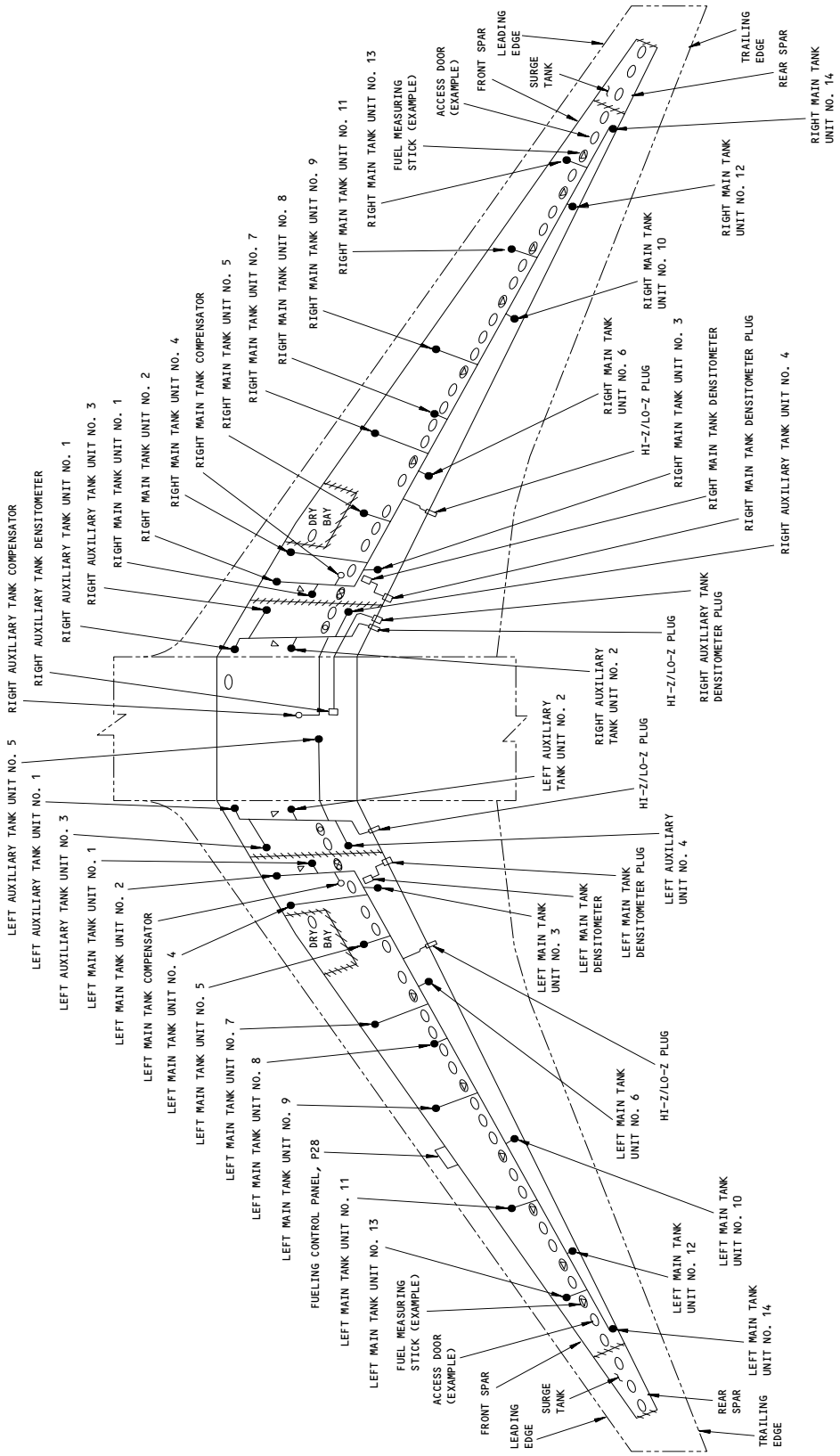

FQIS Tank Unit Installation
Figure 401 (Sheet 1)

BOEING PROPRIETARY - Copyright (C) - Unpublished Work - See title page for details.

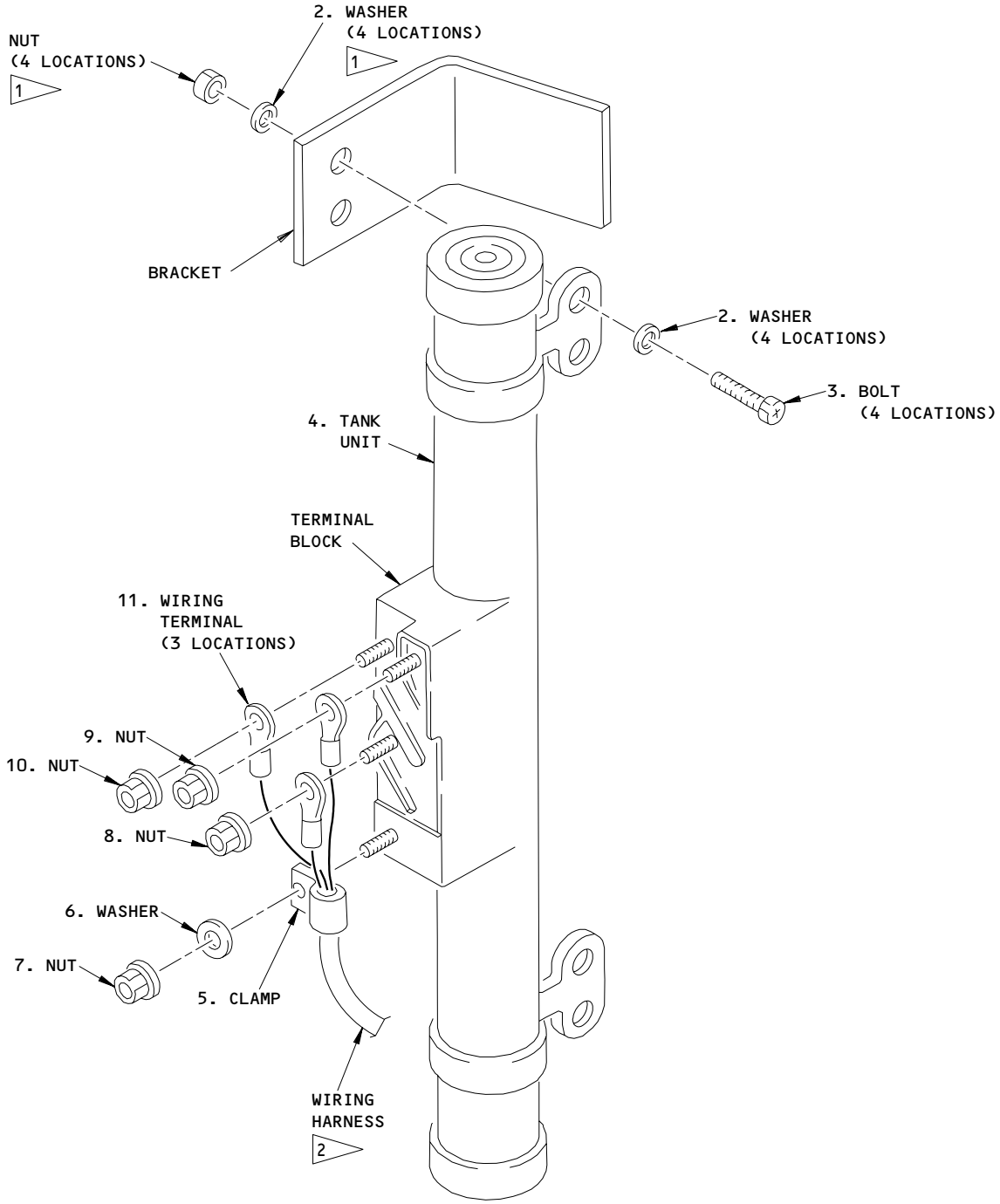

1 NOT INSTALLED ON ALL AIRPLANES

2 ADJUST WIRE SLACK TO MAINTAIN A CLEARANCE OF 0.5 INCH BETWEEN WIRE AND COMPONENTS OR STRUCTURE.
IF 0.5 INCH CLEARANCE IS NOT POSSIBLE YOU MUST MAINTAIN A MINIMUM OF 0.125 INCH.

TANK UNIT INSTALLATION
(EXAMPLE)

FQIS Tank Unit Installation
Figure 401 (Sheet 2)

BOEING PROPRIETARY - Copyright (C) - Unpublished Work - See title page for details.

TANK UNIT	EQUIPMENT NUMBER	TANK ACCESS DOOR
L AUX TANK UNIT NO. 1	TS319	531BB
L AUX TANK UNIT NO. 2	TS318	531BB
L AUX TANK UNIT NO. 3	TS317	531BB
L AUX TANK UNIT NO. 4	TS316	531BB
L AUX TANK UNIT NO. 5	TS320	136KZ
L MAIN TANK UNIT NO. 1	TS314	532BB
L MAIN TANK UNIT NO. 2	TS313	532BB
L MAIN TANK UNIT NO. 3	TS312	532BB
L MAIN TANK UNIT NO. 4	TS311	532BB
L MAIN TANK UNIT NO. 5	TS310	532FB
L MAIN TANK UNIT NO. 6	TS309	541BB
L MAIN TANK UNIT NO. 7	TS308	541CB
L MAIN TANK UNIT NO. 8	TS307	541FB
L MAIN TANK UNIT NO. 9	TS306	541HB
L MAIN TANK UNIT NO. 10	TS305	541KB
L MAIN TANK UNIT NO. 11	TS304	541PB
L MAIN TANK UNIT NO. 12	TS303	541TB
L MAIN TANK UNIT NO. 13	TS302	541VB
L MAIN TANK UNIT NO. 14	TS301	541XB
R AUX TANK UNIT NO. 1	TS329	631BB
R AUX TANK UNIT NO. 2	TS330	631BB
R AUX TANK UNIT NO. 3	TS331	631BB
R AUX TANK UNIT NO. 4	TS332	631BB
R MAIN TANK UNIT NO. 1	TS335	632BB
R MAIN TANK UNIT NO. 2	TS336	632BB
R MAIN TANK UNIT NO. 3	TS337	632BB
R MAIN TANK UNIT NO. 4	TS338	632BB
R MAIN TANK UNIT NO. 5	TS339	632FB
R MAIN TANK UNIT NO. 6	TS340	641BB
R MAIN TANK UNIT NO. 7	TS341	641CB
R MAIN TANK UNIT NO. 8	TS342	641FB
R MAIN TANK UNIT NO. 9	TS343	641HB
R MAIN TANK UNIT NO. 10	TS344	641KB
R MAIN TANK UNIT NO. 11	TS345	641PB
R MAIN TANK UNIT NO. 12	TS346	641TB
R MAIN TANK UNIT NO. 13	TS347	641VB
R MAIN TANK UNIT NO. 14	TS348	641XB

FQIS Tank Unit Equipment Number and Access
Figure 402

BOEING PROPRIETARY - Copyright (C) - Unpublished Work - See title page for details.

S 864-006-002
(5) Open this circuit breaker on the main power distribution panel, P6, and attach a DO-NOT-CLOSE tag:
(a) 6E4, FUELING QTY

S 864-007-002
(6) Open these circuit breakers on the overhead circuit breaker panel, P11, and attach DO-NOT-CLOSE tags:
(a) 11C34, FUEL QTY 1
(b) 11M19, FUEL QTY 2

S 864-008-002
(7) Open this circuit breaker on APU external power panel, P34, and attach a DO-NOT-CLOSE tag:
(a) 34L2, FUEL QTY REFUEL

S 944-009-002

WARNING: OBEY THE FUEL TANK ENTRY PRECAUTIONS. FAILURE TO OBEY THE FUEL TANK ENTRY PRECAUTIONS COULD CAUSE INJURY TO PERSONS OR DAMAGE TO EQUIPMENT.

(8) Obey the fuel tank entry precautions (AMM 28-11-00/201).

S 014-010-002
(9) Go into the fuel tank.

S 034-011-002
(10) Disconnect the wiring terminals (11) from the tank unit (4), (Fig. 401).

S 034-012-002
(11) Loosen the wire clamp (5) on the terminal block of the tank unit.

S 034-013-002
(12) Open the strain relief clamp (5).

S 034-014-002
(13) Move the wiring (11) away from the tank unit (4).

S 034-015-002
(14) Remove the bolts (3), washers (2), and nuts (1) that attach the mounting clamps of the tank unit at the top and bottom of the fuel tank (Fig. 401).

BOEING PROPRIETARY - Copyright (C) - Unpublished Work - See title page for details.

S 024-016-002

(15) Remove the tank unit (4).

TASK 28-41-01-404-017-002

3. Install the Tank Unit

A. References

(1) AMM 12-11-01/301, Fuel Tank Pressure Fueling
(2) AMM 24-22-00/201, Electrical Power Control
(3) AMM 28-11-00/201, Fuel Tank (Purging and Entry)
(4) AMM 28-11-01/401, Main Tank Access Door
(5) AMM 28-11-02/401, Auxiliary Tank Access Door
(6) AMM 28-41-00/501, Fuel Quantity Indicating System (FQIS)
(7) SWPM 20-10-11, Installation of Electrical Wires and Harnesses
(8) SWPM 20-10-12, Wire Harness Supports
(9) SWPM 20-10-19, Wire Separation

B. Access

(1) Location Zones

133 Wing Center Section (Left)
134 Wing Center Section (Right)
531 Center Auxiliary Tank (Left)
532 Main Tank - Inboard of Rib No. 10 (Left)
541 Main Tank - Outboard of Rib No. 10 (Left)
631 Center Auxiliary Tank (Right)
632 Main Tank - Inboard of Rib No. 10 (Right)
641 Main Tank - Outboard of Rib No. 10 (Right)

C. Procedure

S 944-018-002

WARNING: OBEY THE FUEL TANK ENTRY PRECAUTIONS. FAILURE TO OBEY THE FUEL TANK ENTRY PRECAUTIONS COULD CAUSE INJURY TO PERSONS OR DAMAGE TO EQUIPMENT.

(1) Obey the fuel tank entry precautions (AMM 28-11-00/201).

BOEING PROPRIETARY - Copyright (C) - Unpublished Work - See title page for details.

S 424-019-002
(2) Put the tank unit (4) in position.

S 034-020-002
(3) Install the bolts (3), washers (2), and nuts (1).

S 224-021-002
(4) Make sure that the distance between the tank unit (4) and airplane structure is a minimum of 0.1 inch.

NOTE: The recommended distance between the tank unit (4) and airplane structure is 0.5 inch.

S 434-022-002
(5) Connect the wiring terminals (11) to the terminal block of the tank unit (Fig. 401).

S 434-023-002
(6) Install the nuts (8, 9, 10).

NOTE: The nuts are different sizes to prevent errors in connection.

S 434-039-002
(7) Tighten the nuts (8, 9, 10) to these limits:

NUT	TORQUE VALUE
HI-Z	12-15 pound-inches
LO-Z	25-35 pound-inches
SHIELD	15-20 pound-inches

BOEING PROPRIETARY - Copyright (C) - Unpublished Work - See title page for details.

S 434-024-002
(8) Put the wiring harness in its position and intall the clamp (5) (SWPM 20-10-11, SWPM 20-10-12, SWPM 20-10-19).

S 434-025-002
(9) Tighten the wire clamp (5) on the terminal block.

NOTE: Adjust wire slack to maintain a clearance of 0.5 inch between wire and components or structure. If 0.5 inch clearance is not possible, you must maintain a minimum of 0.125 inch clearance.

S 414-027-002

CAUTION: MAKE SURE YOU REMOVE ALL EQUIPMENT, MATERIALS AND UNWANTED PARTICLES FROM IN THE FUEL TANK. UNWANTED MATERIALS CAN BLOCK THE PUMPS AND PREVENT THE SCAVENGE OF FUEL.

(10) If you installed a tank unit (4) in a main fuel tank, install the applicable main tank access door (Fig. 402) (AMM 28-11-01/401).

S 414-028-002
(11) If you installed a tank unit (4) in the auxiliary fuel tank, install the applicable auxiliary tank access door (Fig. 402) (AMM 28-11-02/401).

S 864-029-002
(12) Remove the DO-NOT-CLOSE tag and close this circuit breaker on the P6 panel:
(a) 6E4, FUELING QTY

S 864-030-002
(13) Remove the DO-NOT-CLOSE tags and close these circuit breakers on the P11 panel:
(a) 11C34, FUEL QTY 1

BOEING PROPRIETARY - Copyright (C) - Unpublished Work - See title page for details.

(b) 11M19, FUEL QTY 2

S 864-031-002
(14) Remove the DO-NOT-CLOSE tag and close this circuit breaker on the P34 panel:
(a) 34L2, FUEL QTY REFUEL

S 864-032-002
(15) Supply electrical power (AMM 24-22-00/201).

S 744-033-002
(16) Do the Fuel Quantity BITE Procedure "Self Test ?" (AMM 28-41-00/501).

S 654-034-002
(17) Refuel the applicable fuel tank if no more work is necessary (AMM 12-11-01/301).

S 864-035-002
(18) Remove electrical power if it is not necessary (AMM 24-22-00/201).

BOEING PROPRIETARY - Copyright (C) - Unpublished Work - See title page for details.

TANK AND COMPENSATOR UNITS - CLEANING/PAINTING

1. General
   A. This procedure has one task, to clean the tank units and the compensator unit. The procedure removes microbial contamination from these units.

   TASK 28-41-01-117-007

2. Clean the Tank Unit or the Compensator Unit
   A. Standard Tools and Equipment
      (1) Container - with sufficient depth to clean tank units
      (2) Brushes - Nylon bristle
      (3) Brush - with a bristle outside diameter of 1/4 to 3/8 inch. An extension rod must be attached and the handle and the extension must have a plastic cover.
   B. Consumable Materials
      (1) B00129 - Isopropyl alcohol
   C. References
      (1) AMM 28-41-01/401, FQIS Tank Unit
      (2) AMM 28-41-02/401, FQIS Compensator
   D. Access
      (1) Location Zones

133	Wing Center Section (Left)
134	Wing Center Section (Right)
531	Center Auxiliary Tank (Left)
532	Main Tank - Inboard of Rib No. 10 (Left)
541	Main Tank - Outboard of Rib No. 10 (Left)
631	Center Auxiliary Tank (Right)
632	Main Tank - Inboard of Rib No. 10 (Right)
641	Main Tank - Outboard of Rib No. 10 (Right)

   E. Procedure

      S 017-008
      (1) Remove the applicable tank unit or the compensator (AMM 28-41-01/401, 28-41-02/401).

BOEING PROPRIETARY - Copyright (C) - Unpublished Work - See title page for details.

S 117-009

WARNING: MAKE SURE THE AREA HAS A GOOD FLOW OF AIR. DO NOT BREATHE THE GAS FROM THE SOLVENT OR USE IT IN AN AREA WITH AN OPEN FLAME. INJURY TO PERSONS CAN EASILY OCCUR.

CAUTION: DO NOT MOVE OR LOOSEN THE SPACERS WHEN YOU CLEAN THE INNER ELECTRODE. THE FUEL QUANTITY INDICATING SYSTEM WILL NOT GIVE THE CORRECT VALUE.

(2) Fully rub all of the surfaces of the tank unit or the compensator with the alcohol and the nylon brushes.
   (a) Do not use water or soap.
   (b) Do not make scratches in the tank unit or the compensator.
   (c) Make sure you remove all of the microbial contamination.

S 177-004
(3) Remove all of the loose material with a good flow of clean alcohol.

S 167-005
(4) Fully rub the tank unit or the compensator with a clean lintfree cloth to dry it.

S 417-006
(5) Install the tank unit or the compensator (AMM 28-41-01/401, 28-41-02/401).

BOEING PROPRIETARY - Copyright (C) - Unpublished Work - See title page for details.

FQIS COMPENSATOR - REMOVAL/INSTALLATION

1. General
   A. A compensator is installed at the bottom of each fuel tank, where it senses the change in the fuel dielectric.
   B. This procedure contains two tasks. The first task removes the compensator. The second task installs the compensator.

TASK 28-41-02-004-001-001

2. Remove the Compensator (Fig. 401)
   A. References
      (1) AMM 28-11-00/201, Fuel Tank (Purging and Entry)
      (2) AMM 28-11-01/401, Main Tank Access Door
      (3) AMM 28-11-02/401, Auxiliary Tank Access Door
      (4) AMM 28-11-07/401, Fuel Tank Baffle Door
      (5) AMM 28-26-00/201, Defueling
   B. Access
      (1) Location Zones
          136 Environmental Control System Bay (Right)
          532 Main Tank - Inboard of Rib No. 10 (Left)
          632 Main Tank - Inboard of Rib No. 10 (Right)

      (2) Access Panels
          136KZ Auxiliary Tank Access Door (Center)
          532AZ Fuel Tank Baffle Door (Left)
          532BB Main Tank Access Door (Left)
          632AZ Fuel Tank Baffle Door (Right)
          632BB Main Tank Access Door (Right)

   C. Procedure

      S 654-002-001
      (1) Defuel the applicable fuel tank (AMM 28-26-00/201).

      S 654-003-001
      (2) Drain and purge the applicable fuel tank (AMM 28-11-00/201).

      S 014-004-001
      (3) For the left main tank compensator, do the steps that follow:
          (a) Remove the left main tank access door, 532BB (AMM 28-11-01/401).
          (b) Remove the left fuel tank baffle door, 532AZ (AMM 28-11-07/401).

      S 014-005-001
      (4) For the right auxiliary tank compensator, remove the center auxiliary tank access door, 136KZ (AMM 28-11-02/401).

BOEING PROPRIETARY - Copyright (C) - Unpublished Work - See title page for details.

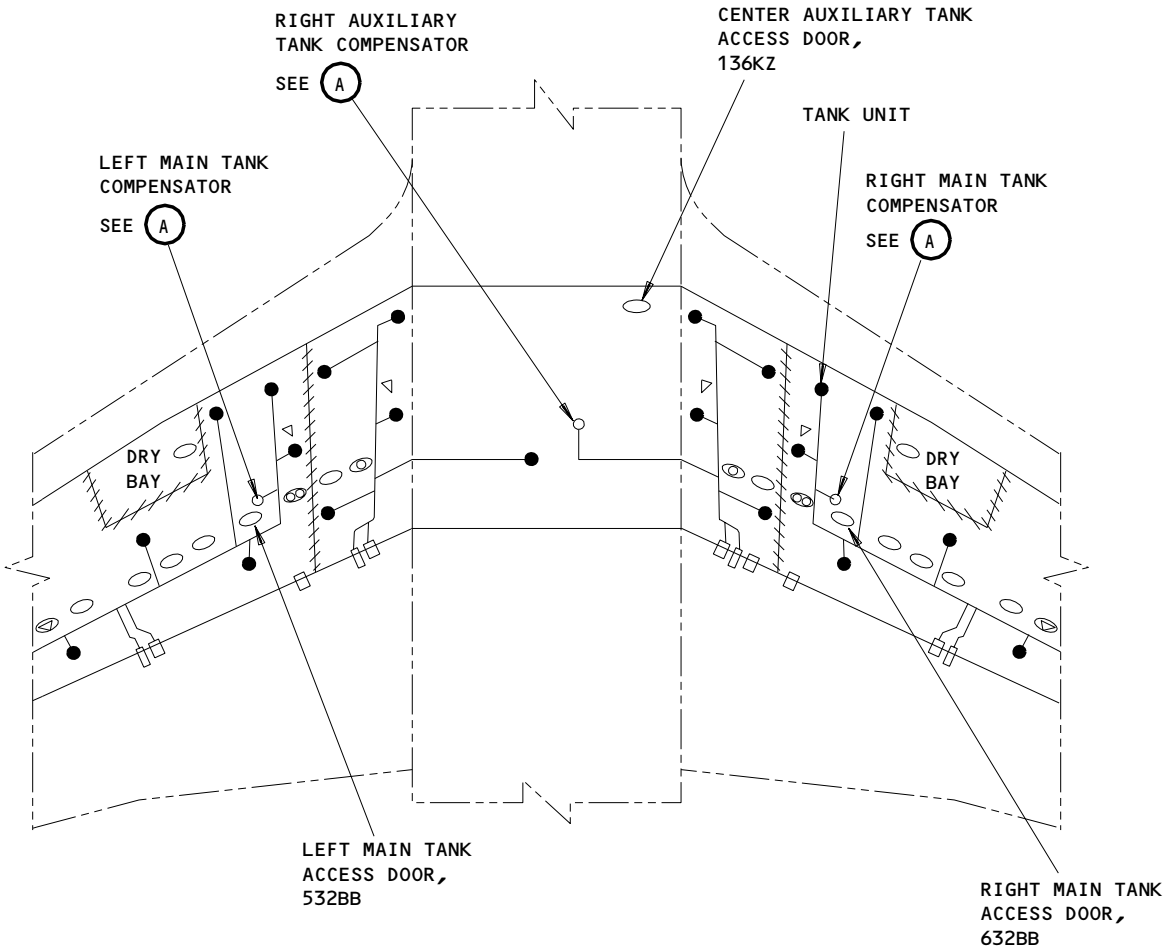

Compensator Installation
Figure 401 (Sheet 1)

BOEING PROPRIETARY - Copyright (C) - Unpublished Work - See title page for details.

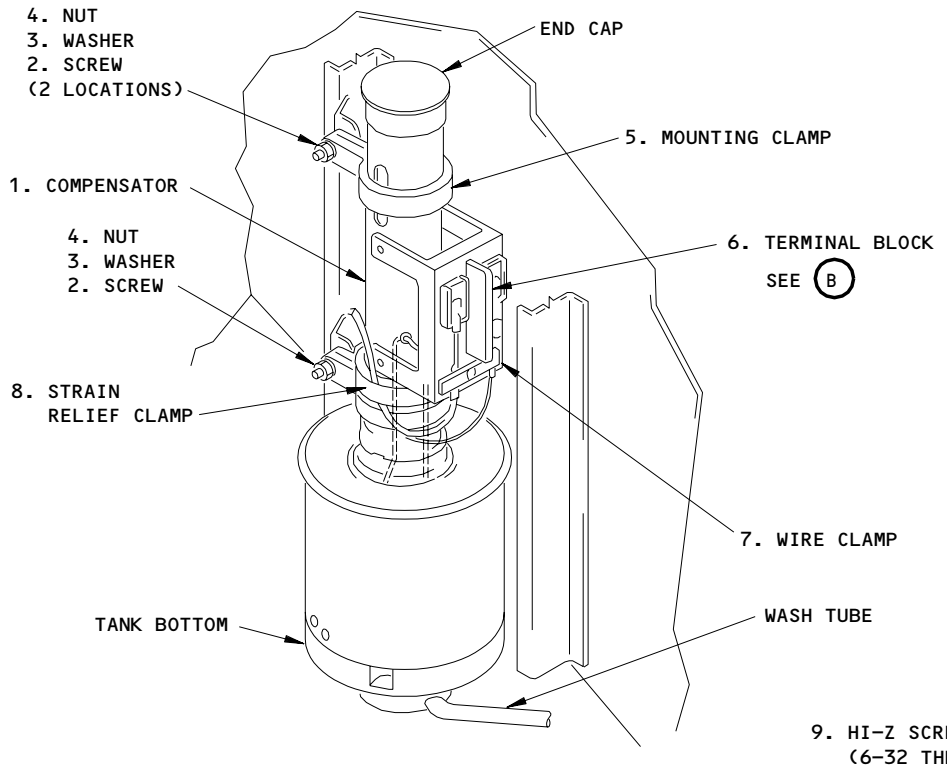

COMPENSATOR INSTALLATION
(EXAMPLE)

A

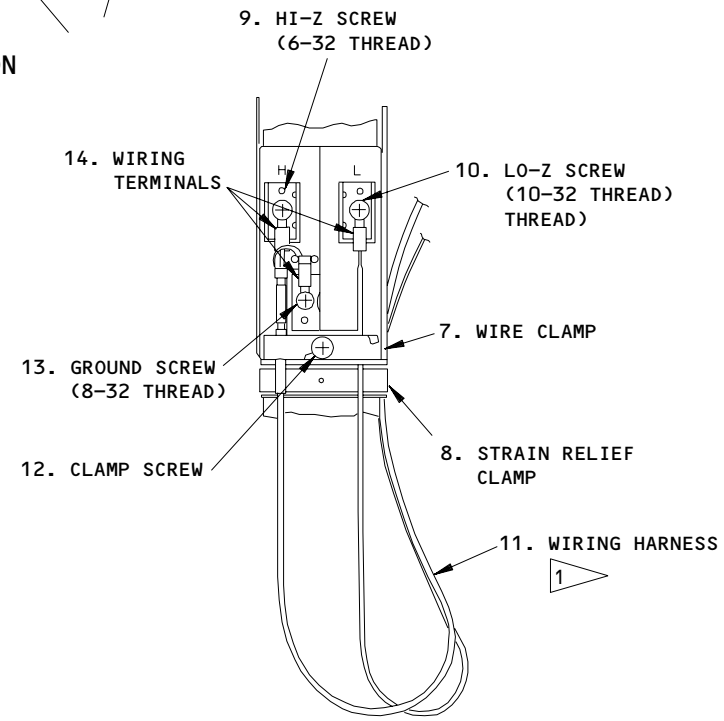

TERMINAL BLOCK

B

1 ADJUST WIRE SLACK TO MAINTAIN A CLEARANCE OF 0.5 INCH BETWEEN WIRE AND COMPONENTS OR STRUCTURE.
IF 0.5 INCH CLEARANCE IS NOT POSSIBLE YOU MUST MAINTAIN A MINIMUM OF 0.125 INCH.

Compensator Installation
Figure 401 (Sheet 2)

BOEING PROPRIETARY - Copyright (C) - Unpublished Work - See title page for details.

S 014-014-001
(5) For the right main tank compensator, do the steps that follow:
(a) Remove the right main tank access door, 632BB (AMM 28-11-01/401).
(b) Remove the right fuel tank baffle door, 632AZ (AMM 28-11-07/401).

S 864-015-001
(6) Open this circuit breaker on main power distribution panel, P6, and attach a DO-NOT-CLOSE tag:
(a) 6E4, FUELING QTY

S 864-016-001
(7) Open these circuit breakers on the overhead circuit breaker panel, P11, and attach DO-NOT-CLOSE tags:
(a) 11C34, FUEL QTY 1
(b) 11M19, FUEL QTY 2

S 864-017-001
(8) Open this circuit breaker on the APU external power panel, P34, and attach a DO-NOT-CLOSE tag:
(a) 34L2, FUEL QTY REFUEL

S 944-018-001

WARNING: OBEY THE FUEL TANK ENTRY PRECAUTIONS. FAILURE TO OBEY THE FUEL TANK ENTRY PRECAUTIONS COULD CAUSE INJURY TO PERSONS OR DAMAGE TO EQUIPMENT.

(9) Obey the fuel tank entry precautions (AMM 28-11-00/201).

S 014-019-001
(10) Go into the fuel tank.

S 034-020-001
(11) Remove the ground screw (13), HI-Z screw (9) and LO-Z screw (10) to disconnect the wiring terminals (14) from the terminal block (6).

S 034-021-001
(12) Loosen the clamp screw (12) to open the wire clamp (7) at the terminal block (6) on the compensator (1) (View B).

S 034-022-001
(13) Loosen the strain relief clamp (8).

S 034-023-001
(14) Remove the wiring (11) from the compensator (1).

BOEING PROPRIETARY - Copyright (C) - Unpublished Work - See title page for details.

S 034-024-001

(15) Remove the screws (2) that attach the mounting clamps (5) to the support structure (View A).

S 024-025-001

(16) Remove the compensator (1).

TASK 28-41-02-404-026-001

3. Install the Compensator (Fig. 401)

A. References

(1) AMM 12-11-01/301, Fuel Tank Pressure Fueling
(2) AMM 24-22-00/201, Electrical Power Control
(3) AMM 28-11-00/201, Fuel Tank (Purging and Entry)
(4) AMM 28-11-01/401, Main Tank Access Door
(5) AMM 28-11-02/401, Auxiliary Tank Access Door
(6) AMM 28-11-07/401, Fuel Tank Baffle Door
(7) AMM 28-41-00/501, Fuel Quantity Indicating System
(8) SWPM 20-10-11, Installation of Electrical Wires and Harnesses
(9) SWPM 20-10-12, Wire Harness Supports
(10) SWPM 20-10-19, Wire Separation

B. Access

(1) Location Zones

136	Environmental Control System Bay (Right)
532	Main Tank - Inboard of Rib No. 10 (Left)
632	Main Tank - Inboard of Rib No. 10 (Right)

(2) Access Panels

136KZ	Auxiliary Tank Access Door (Center)
532AZ	Fuel Tank Baffle Door (Left)
532BB	Main Tank Access Door (Left)
632AZ	Fuel Tank Baffle Door (Right)
632BB	Main Tank Access Door (Right)

C. Procedure

BOEING PROPRIETARY - Copyright (C) - Unpublished Work - See title page for details.

S 944-027-001

WARNING: OBEY THE FUEL TANK ENTRY PRECAUTIONS. FAILURE TO OBEY THE FUEL TANK ENTRY PRECAUTIONS COULD CAUSE INJURY TO PERSONS OR DAMAGE TO EQUIPMENT.

(1) Obey the fuel tank entry precautions (AMM 28-11-00/201).

S 424-028-001
(2) Put the compensator (1) in position (View A).

S 824-029-001
(3) Align the mounting clamps (5) with the support structure.

S 434-030-001
(4) Install the screws (2), washers (3) and nuts (4).

S 434-031-001
(5) Connect the wiring terminals (14) to the terminal block (6) (View B).

S 434-032-001
(6) Install the ground screw (13), HI-Z screw (9) and LO-Z screw (10) to connect the wiring terminals (14) to the terminal block (6).

NOTE: The screws (9, 10, 13) are different sizes to prevent errors in connection.

S 434-033-001
(7) Put the wiring (1) in position.

S 434-034-001
(8) Tighten the clamp screw (12) and close the wire clamp (7) on the terminal block (6).

S 434-035-001
(9) Tighten the strain relief clamp (8) (SWPM 20-10-11, SWPM 20-10-12, SWPM 20-10-19).

NOTE: Adjust wire slack to maintain a clearance of 0.5 inch between wire and components or structure. If 0.5 inch clearance is not possible, you must maintain a minimum of 0.125 inch clearance.

BOEING PROPRIETARY - Copyright (C) - Unpublished Work - See title page for details.

S 214-036-001

CAUTION: MAKE SURE YOU REMOVE ALL EQUIPMENT, MATERIALS, AND UNWANTED PARTICLES FROM THE FUEL TANK. UNWANTED MATERIALS CAN BLOCK THE PUMPS AND PREVENT THE SCAVENGE OF FUEL.

(10) Make sure you remove all equipment and materials before you go out of the fuel tank.

S 414-037-001

(11) For the left main tank compensator, do the steps that follow:
(a) Install the left fuel tank baffle door, 532AZ (AMM 28-11-07/401).
(b) Install the left main tank access door, 532BB (AMM 28-11-01/401).

S 414-038-001

(12) For the right auxiliary tank compensator, install the center auxiliary tank access door, 136KZ (AMM 28-11-02/401).

S 414-047-001

(13) For the right main tank compensator, do the steps that follow:
(a) Install the right fuel tank baffle door, 632AZ (AMM 28-11-07/401).
(b) Install the right main tank access door, 632BB (AMM 28-11-01/401).

S 864-048-001

(14) Remove the DO-NOT-CLOSE tag and close this circuit breaker on the P6 panel:
(a) 6E4, FUELING QTY

S 864-049-001

(15) Remove the DO-NOT-CLOSE tags and close these circuit breakers on the P11 panel:
(a) 11C34, FUEL QTY 1
(b) 11M19, FUEL QTY 2

S 864-050-001

(16) Remove the DO-NOT-CLOSE tag and close this circuit breaker on the P34 panel:
(a) 34L2, FUEL QTY REFUEL

S 864-051-001

(17) Supply electrical power (AMM 24-22-00/201).

S 744-052-001

(18) Do the fuel quantity BITE procedure (AMM 28-41-00/501).

BOEING PROPRIETARY - Copyright (C) - Unpublished Work - See title page for details.

S 654-053-001
(19) Refuel the applicable fuel tank, if no more work is necessary (AMM 12-11-01/301).

S 864-054-001
(20) Remove electrical power if it is not necessary (AMM 24-22-00/201).

BOEING PROPRIETARY - Copyright (C) - Unpublished Work - See title page for details.

FQIS COMPENSATOR - REMOVAL/INSTALLATION

1. General
   A. A compensator is installed at the bottom of each fuel tank, where it senses the change in the fuel dielectric.
   B. This procedure contains two tasks. The first task removes the compensator. The second task installs the compensator.

TASK 28-41-02-004-001-002

2. Remove the Compensator (Fig. 401)
   A. References
      (1) AMM 28-11-00/201, Fuel Tank (Purging and Entry)
      (2) AMM 28-11-01/401, Main Tank Access Door
      (3) AMM 28-11-02/401, Auxiliary Tank Access Door
      (4) AMM 28-11-07/401, Fuel Tank Baffle Door
      (5) AMM 28-26-00/201, Defueling
   B. Access
      (1) Location Zones
          136 Environmental Control System Bay (Right)
          532 Main Tank - Inboard of Rib No. 10 (Left)
          632 Main Tank - Inboard of Rib No. 10 (Right)

      (2) Access Panels
          136KZ Auxiliary Tank Access Door (Center)
          532AZ Fuel Tank Baffle Door (Left)
          532BB Main Tank Access Door (Left)
          632AZ Fuel Tank Baffle Door (Right)
          632BB Main Tank Access Door (Right)

   C. Procedure

      S 654-002-002
      (1) Defuel the applicable fuel tank (AMM 28-26-00/201).

      S 654-003-002
      (2) Drain and purge the applicable fuel tank (AMM 28-11-00/201).

      S 014-004-002
      (3) For the left main tank compensator, do the steps that follow:
          (a) Remove the left main tank access door, 532BB (AMM 28-11-01/401).
          (b) Remove the left fuel tank baffle door, 532AZ (AMM 28-11-07/401).

      S 014-005-002
      (4) For the right auxiliary tank compensator, remove the center auxiliary tank access door, 136KZ (AMM 28-11-02/401).

BOEING PROPRIETARY - Copyright (C) - Unpublished Work - See title page for details.

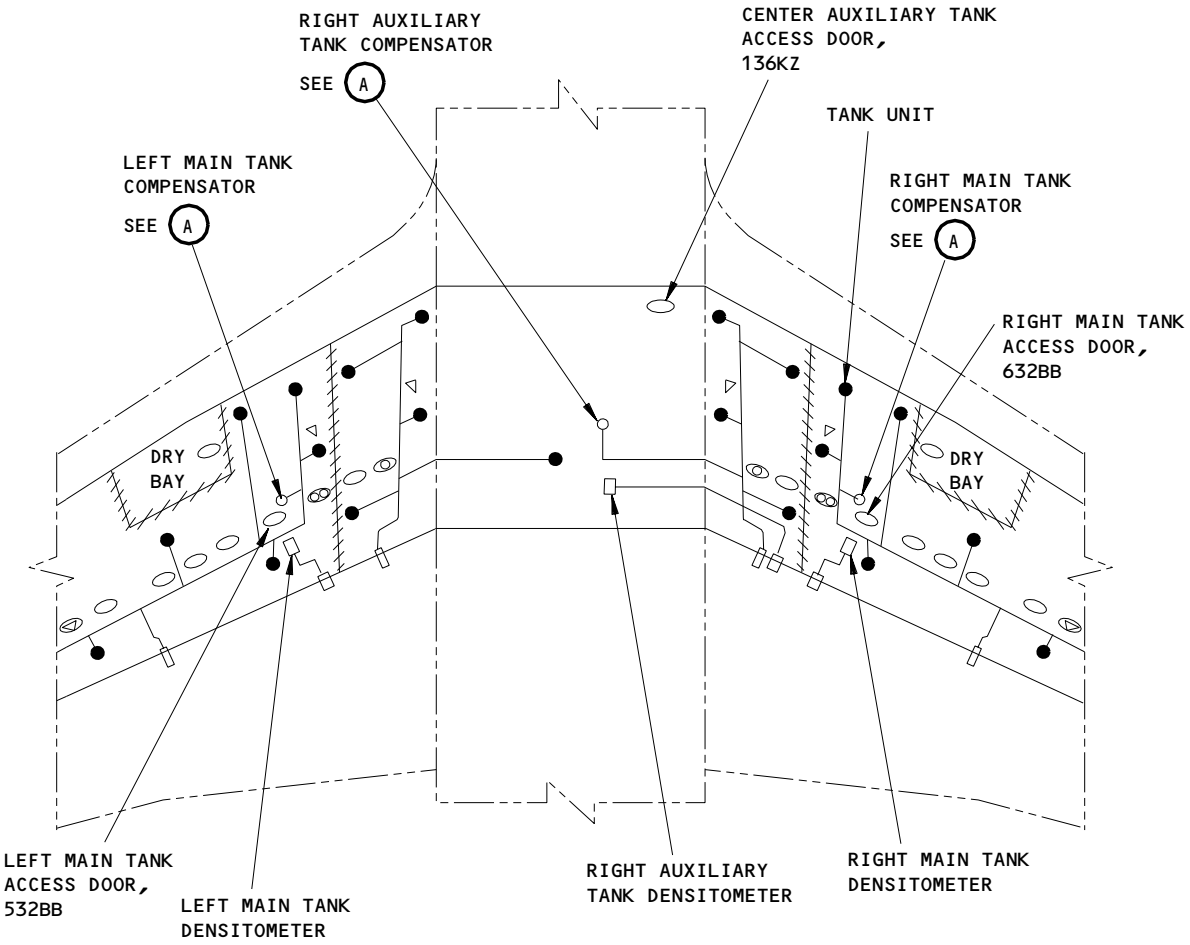

Compensator Installation
Figure 401 (Sheet 1)

BOEING PROPRIETARY - Copyright (C) - Unpublished Work - See title page for details.

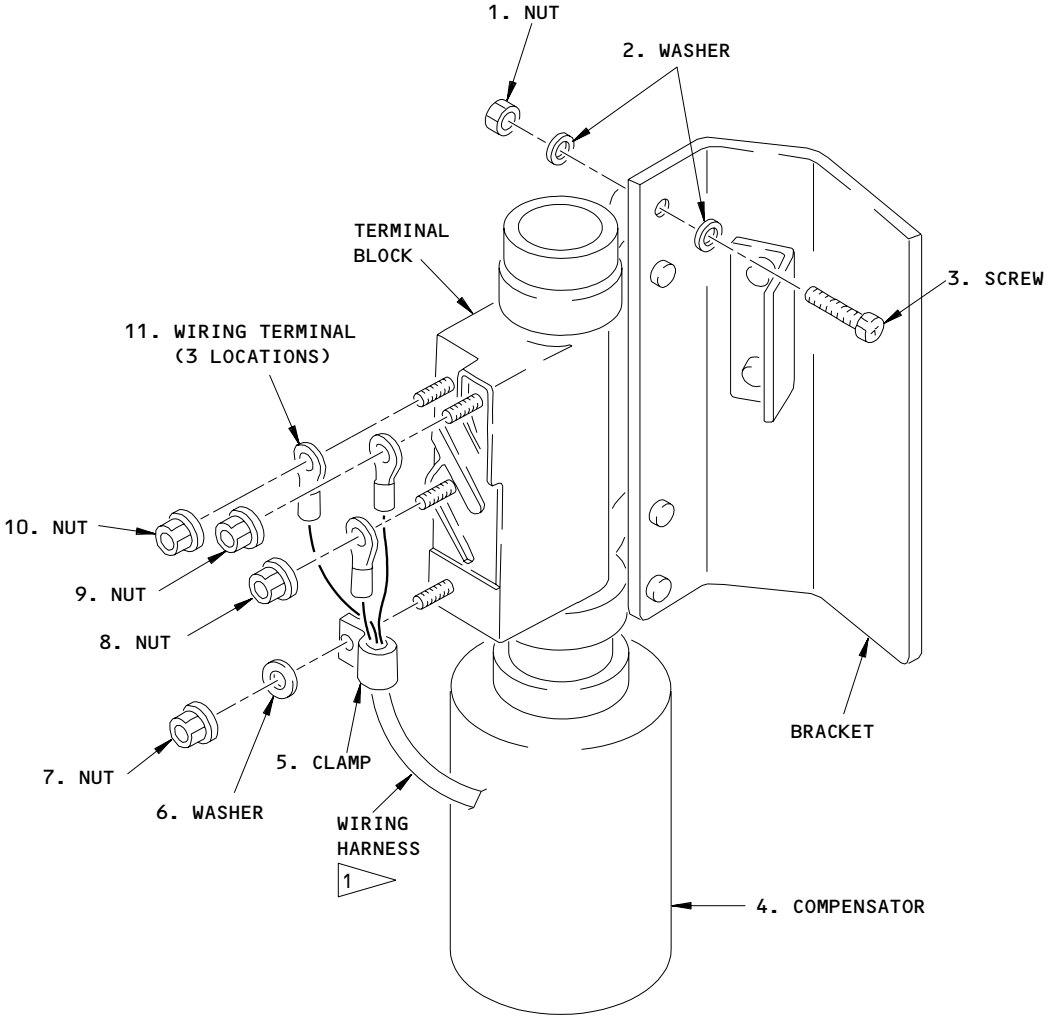

LEFT MAIN, CENTER OR RIGHT MAIN TANK COMPENSATOR

A

1 ADJUST WIRE SLACK TO MAINTAIN A CLEARANCE OF 0.5 INCH BETWEEN WIRE AND COMPONENTS OR STRUCTURE.
IF 0.5 INCH CLEARANCE IS NOT POSSIBLE YOU MUST MAINTAIN A MINIMUM OF 0.125 INCH.

Compensator Installation
Figure 401 (Sheet 2)

BOEING PROPRIETARY - Copyright (C) - Unpublished Work - See title page for details.

S 014-014-002
(5) For the right main tank compensator, do the steps that follow:
(a) Remove the right main tank access door, 632BB (AMM 28-11-01/401).
(b) Remove the right fuel tank baffle door, 632AZ (AMM 28-11-07/401).

S 864-015-002
(6) Open this circuit breaker on main power distribution panel, P6, and attach a DO-NOT-CLOSE tag:
(a) 6E4, FUELING QTY

S 864-016-002
(7) Open these circuit breakers on the overhead circuit breaker panel, P11, and attach DO-NOT-CLOSE tags:
(a) 11C34, FUEL QTY 1
(b) 11M19, FUEL QTY 2

S 864-017-002
(8) Open this circuit breaker on the APU external power panel, P34, and attach a DO-NOT-CLOSE tag:
(a) 34L2, FUEL QTY REFUEL

S 944-018-002

WARNING: OBEY THE FUEL TANK ENTRY PRECAUTIONS. FAILURE TO OBEY THE FUEL TANK ENTRY PRECAUTIONS COULD CAUSE INJURY TO PERSONS OR DAMAGE TO EQUIPMENT.

(9) Obey the fuel tank entry precautions (AMM 28-11-00/201).

S 014-019-002
(10) Go into the fuel tank.

S 034-020-002
(11) Remove the nuts (8, 9, 10) to disconnect the wiring terminals (11) from the terminal block.

S 034-021-002
(12) Remove the clamp nut (7) and washer (6) and remove the wire clamp (5) from the terminal block on the compensator (4), (View A, Fig. 401)

S 034-023-002
(13) Remove the wiring (11) from the compensator (4).

BOEING PROPRIETARY - Copyright (C) - Unpublished Work - See title page for details.

S 034-024-002

(14) Remove the screws (3) that attach the mounting clamps to the bracket (View A, Fig. 401)

S 024-025-002

(15) Remove the compensator (4).

TASK 28-41-02-404-026-002

3. Install the Compensator (Fig. 401)

A. References

(1) AMM 12-11-01/301, Fuel Tank Pressure Fueling
(2) AMM 24-22-00/201, Electrical Power Control
(3) AMM 28-11-00/201, Fuel Tank (Purging and Entry)
(4) AMM 28-11-01/401, Main Tank Access Door
(5) AMM 28-11-02/401, Auxiliary Tank Access Door
(6) AMM 28-11-07/401, Fuel Tank Baffle Door
(7) AMM 28-41-00/501, Fuel Quantity Indicating System
(8) SWPM 20-10-11, Installation of Electrical Wires and Harnesses
(9) SWPM 20-10-12, Wire Harness Supports
(10) SWPM 20-10-19, Wire Separation

B. Access

(1) Location Zones

136	Environmental Control System Bay (Right)
532	Main Tank - Inboard of Rib No. 10 (Left)
632	Main Tank - Inboard of Rib No. 10 (Right)

(2) Access Panels

136KZ	Auxiliary Tank Access Door (Center)
532AZ	Fuel Tank Baffle Door (Left)
532BB	Main Tank Access Door (Left)
632AZ	Fuel Tank Baffle Door (Right)
632BB	Main Tank Access Door (Right)

BOEING PROPRIETARY - Copyright (C) - Unpublished Work - See title page for details.

C. Procedure

S 944-027-002

WARNING: OBEY THE FUEL TANK ENTRY PRECAUTIONS. FAILURE TO OBEY THE FUEL TANK ENTRY PRECAUTIONS COULD CAUSE INJURY TO PERSONS OR DAMAGE TO EQUIPMENT.

(1) Obey the fuel tank entry precautions (AMM 28-11-00/201).

S 424-028-002
(2) Put the compensator (4) in position (View A).

S 434-030-002
(3) Install the screws (3), washers (2) and nuts (1).

S 434-031-002
(4) Connect the wiring terminals (11) to the terminal block (Fig. 401).

S 434-032-002
(5) Install the nuts (8, 9, 10).

NOTE: The nuts are different sizes to prevent errors in connection.

S 434-066-002
(6) Tighten the nuts (8, 9, 10) to these limits:

NUT	TORQUE VALUE
HI-Z	12-15 pound-inches
LO-Z	25-35 pound-inches
SHIELD	15-20 pound-inches

BOEING PROPRIETARY - Copyright (C) - Unpublished Work - See title page for details.

S 434-033-002

(7) Put the wiring harness in its position and install the clamp (5) (SWPM 20-10-11, SWPM 20-10-12, SWPM 20-10-19).

S 434-034-002

(8) Tighten the wire clamp (5) on the terminal block.

NOTE: Adjust wire slack to maintain a clearance of 0.5 inch between wire and components or structure. If 0.5 inch clearance is not possible, you must maintain a minimum of 0.125 inch clearance.

S 214-036-002

CAUTION: MAKE SURE YOU REMOVE ALL EQUIPMENT, MATERIALS, AND UNWANTED PARTICLES FROM THE FUEL TANK. UNWANTED MATERIALS CAN BLOCK THE PUMPS AND PREVENT THE SCAVENGE OF FUEL.

(9) Make sure you remove all equipment and materials before you go out of the fuel tank.

S 414-037-002

(10) For the left main tank compensator, do the steps that follow:
- (a) Install the left fuel tank baffle door, 532AZ (AMM 28-11-07/401).
- (b) Install the left main tank access door, 532BB (AMM 28-11-01/401).

S 414-038-002

(11) For the right auxiliary tank compensator, install the center auxiliary tank access door, 136KZ (AMM 28-11-02/401).

S 414-047-002

(12) For the right main tank compensator, do the steps that follow:
- (a) Install the right fuel tank baffle door, 632AZ (AMM 28-11-07/401).
- (b) Install the right main tank access door, 632BB (AMM 28-11-01/401).

BOEING PROPRIETARY - Copyright (C) - Unpublished Work - See title page for details.

S 864-048-002
(13) Remove the DO-NOT-CLOSE tag and close this circuit breaker on the P6 panel:
(a) 6E4, FUELING QTY

S 864-049-002
(14) Remove the DO-NOT-CLOSE tags and close these circuit breakers on the P11 panel:
(a) 11C34, FUEL QTY 1
(b) 11M19, FUEL QTY 2

S 864-050-002
(15) Remove the DO-NOT-CLOSE tag and close this circuit breaker on the P34 panel:
(a) 34L2, FUEL QTY REFUEL

S 864-051-002
(16) Supply electrical power (AMM 24-22-00/201).

S 744-052-002
(17) Do the fuel quantity BITE procedure (AMM 28-41-00/501).

S 654-053-002
(18) Refuel the applicable fuel tank, if no more work is necessary (AMM 12-11-01/301).

S 864-054-002
(19) Remove electrical power if it is not necessary (AMM 24-22-00/201).

BOEING PROPRIETARY - Copyright (C) - Unpublished Work - See title page for details.

FQIS DENSITOMETER - REMOVAL/INSTALLATION

1. General
   A. This procedure contains four tasks. The first task removes the densitometer electronics unit. The second task installs the densitometer electronics unit. The third task removes the densitometer emitter. The fourth task installs the densitometer emitter.

TASK 28-41-03-004-001-001

2. Remove the Densitometer Electronics Unit
   A. General
      (1) Three densitometers supply fuel density information to the FQIS processor to calculate fuel quantity. Each densitometer contains two parts: a densitometer emitter and a densitometer electronics unit.

      WARNING: ALL REMOVALS AND INSTALLATIONS OF THE DENSITOMETER EMITTER MUST BE DONE BY OR UNDER THE DIRECT SUPERVISION OF TRAINED AND CERTIFIED PERSONNEL. ALL TRAINED AND CERTIFIED PERSONNEL MUST BE LISTED IN HONEYWELL, INC.'S RADIATION SAFETY TRAINING RECORDS AND AND SHOULD BE LISTED AS TRAINED AND CERTIFIED WITHIN YOUR COMPANY. NO SPECIAL TRAINING IS NECESSARY TO DO OHMMETER MEASUREMENTS OF THE EMITTER'S THREE-PIN CONNECTOR. THE DENSITOMETER EMITTER CONTAINS A LOW LEVEL RADIOACTIVE SOURCE. DISASSEMBLY OF THE DENSITOMETER EMITTER BY UNQUALIFIED PERSONNEL CAN BE DANGEROUS.

      (2) The densitometer emitter contains a low level radioactive source (2.5 millicuries, Americium 241). The densitometer emitter has been specially designed such that in all conceivable conditions the radioactive source will be protected. Therefore with the correct training from the Honeywell Inc. your airline can get the approval to safely remove and install the densitometer emitter.
      (3) The densitometer electronics unit is installed on four mounting studs on the rear of the densitometer emitter.
      (4) You do not move the densitometer emitter when you remove the densitometer electronics unit.
      (5) Airline maintenance persons can remove the densitometer electronics unit.
      (6) The procedure to remove the densitometer electronics unit is the same for all three densitometers.
   B. References
      (1) AMM 32-00-15/201, Landing Gear Door Locks
      (2) AMM 32-00-20/201, Landing Gear Downlocks

BOEING PROPRIETARY - Copyright (C) - Unpublished Work - See title page for details.

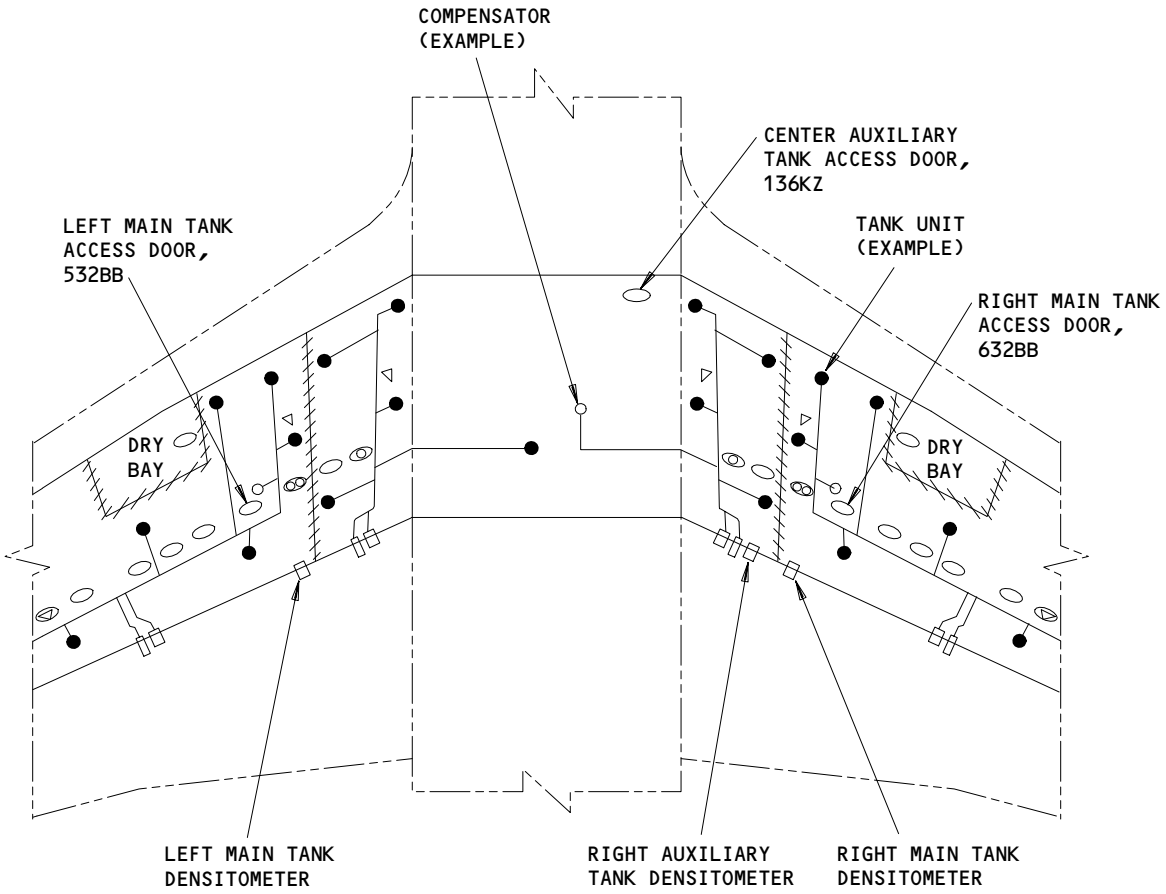

Densitometer Installation
Figure 401

BOEING PROPRIETARY - Copyright (C) - Unpublished Work - See title page for details.

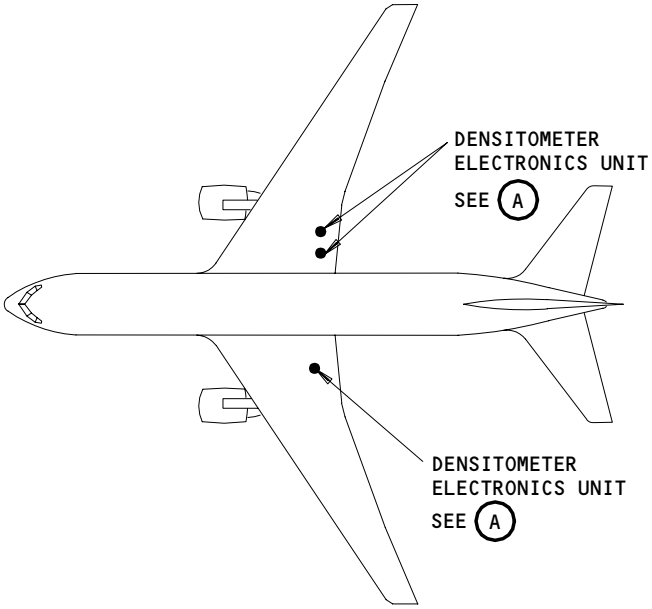

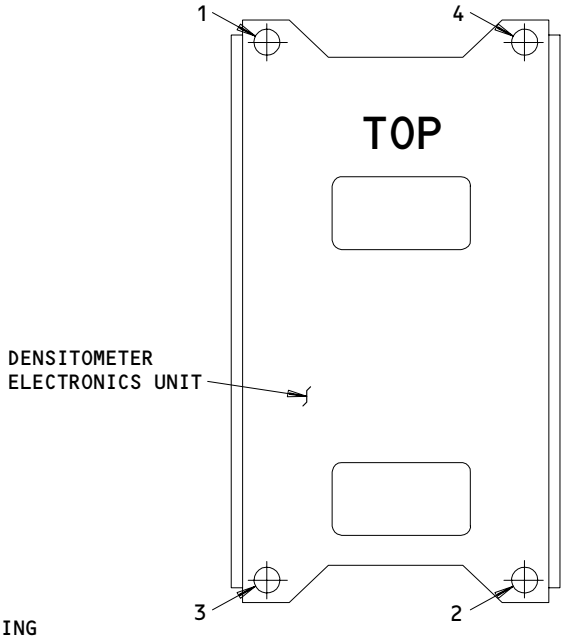

SEQUENCE TO TIGHTEN THE NUTS

B

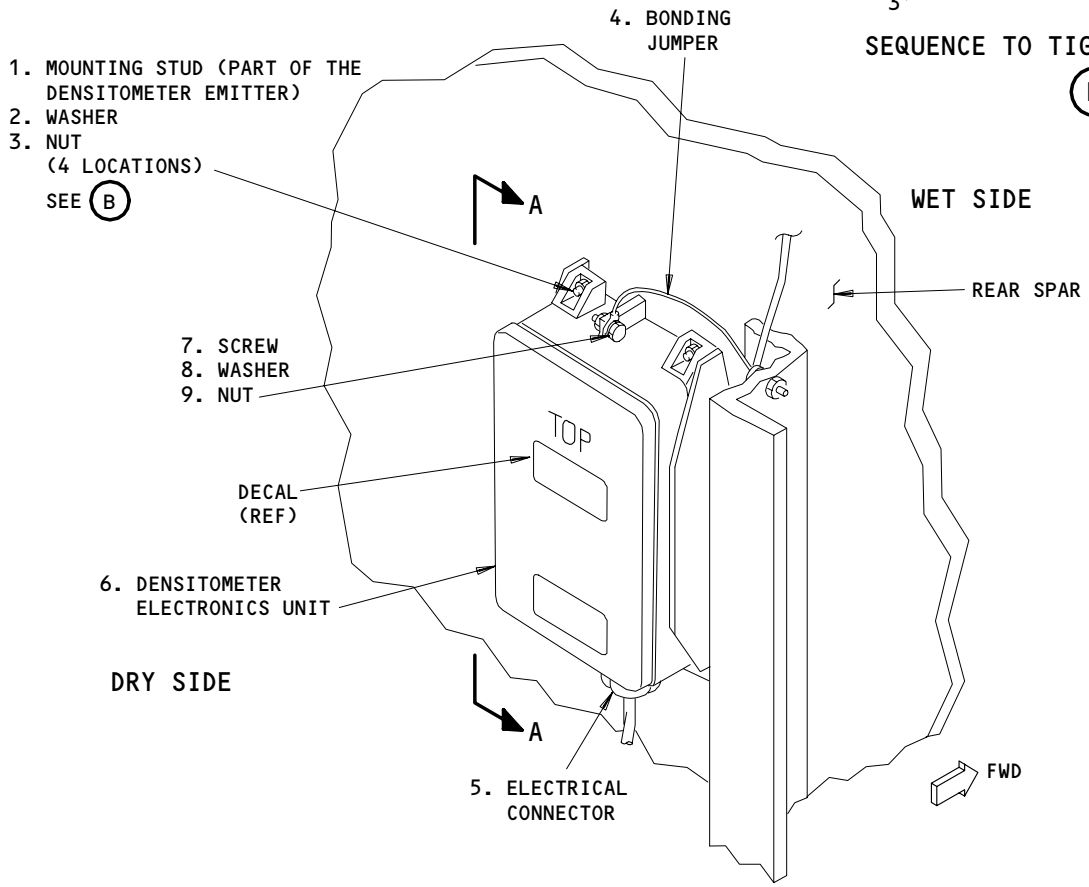

DENSITOMETER ELECTRONICS UNIT

A

Densitometer Electronics Unit Installation
Figure 402 (Sheet 1)

BOEING PROPRIETARY - Copyright (C) - Unpublished Work - See title page for details.

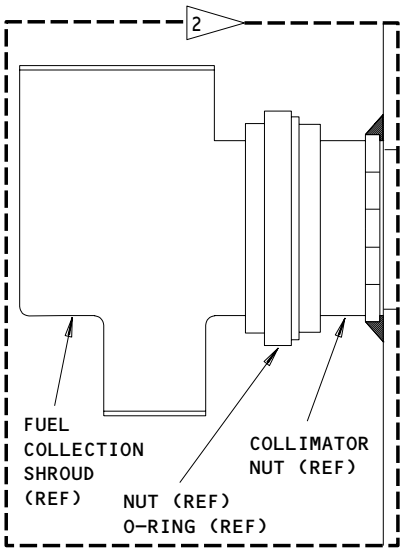

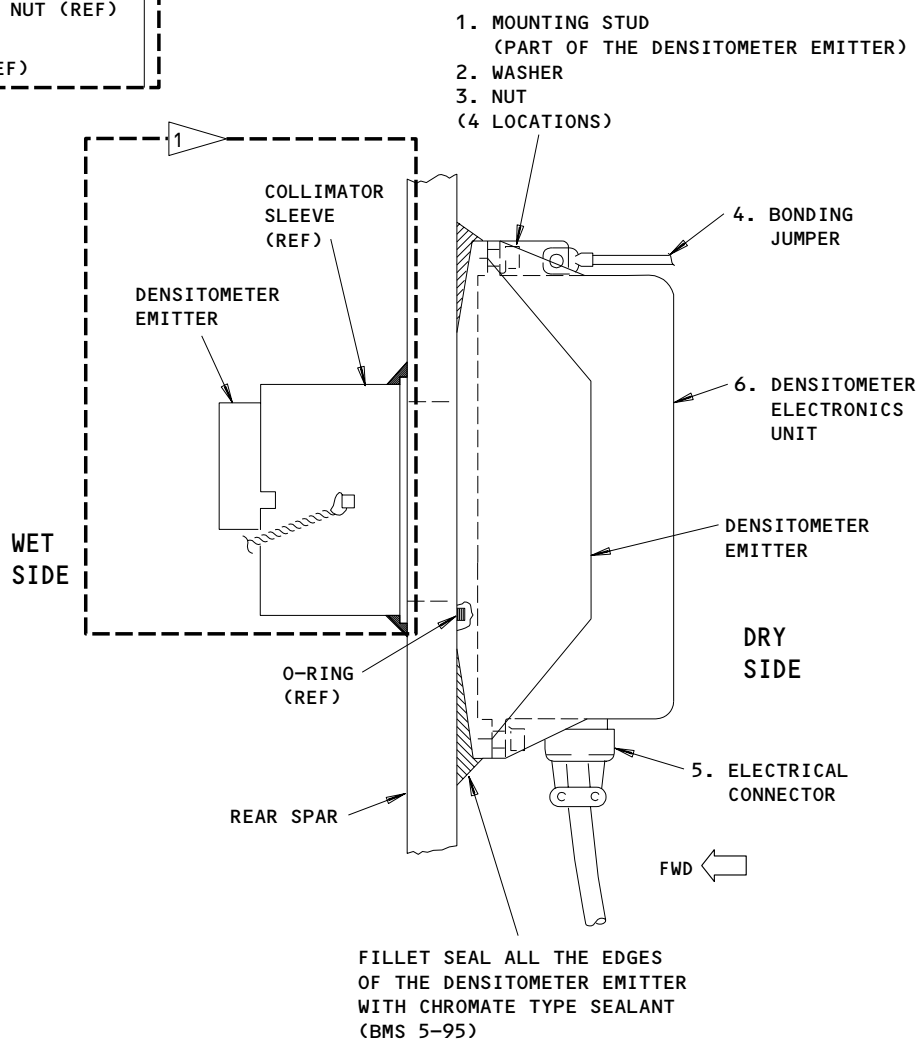

A-A

1 LEFT MAIN TANK DENSITOMETER
AND RIGHT MAIN TANK DENSITOMETER

2 RIGHT AUXILIARY TANK DENSITOMETER

Densitometer Electronics Unit Installation
Figure 402 (Sheet 2)

BOEING PROPRIETARY - Copyright (C) - Unpublished Work - See title page for details.

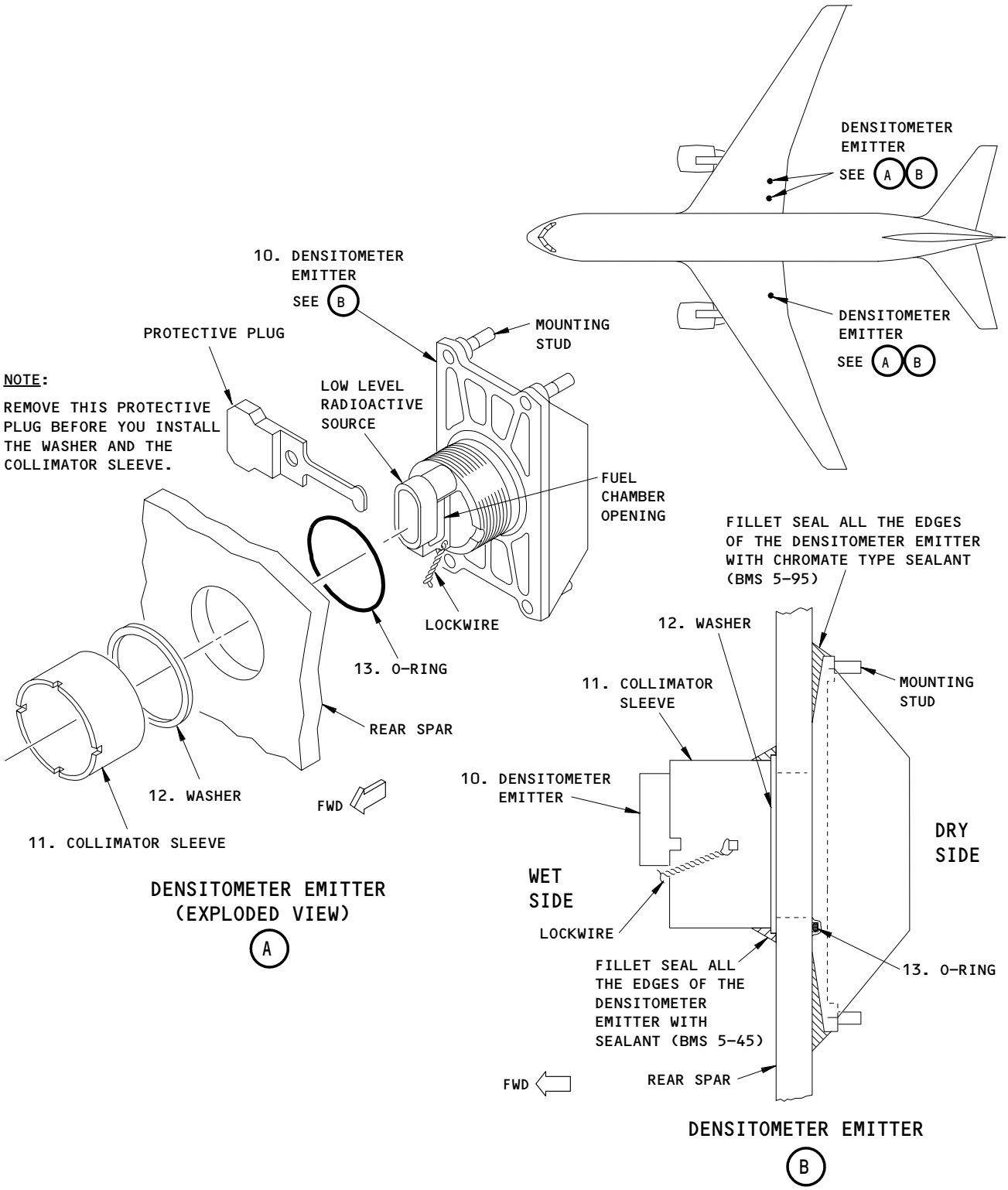

Densitometer Emitter Installation
Figure 403

BOEING PROPRIETARY - Copyright (C) - Unpublished Work - See title page for details.

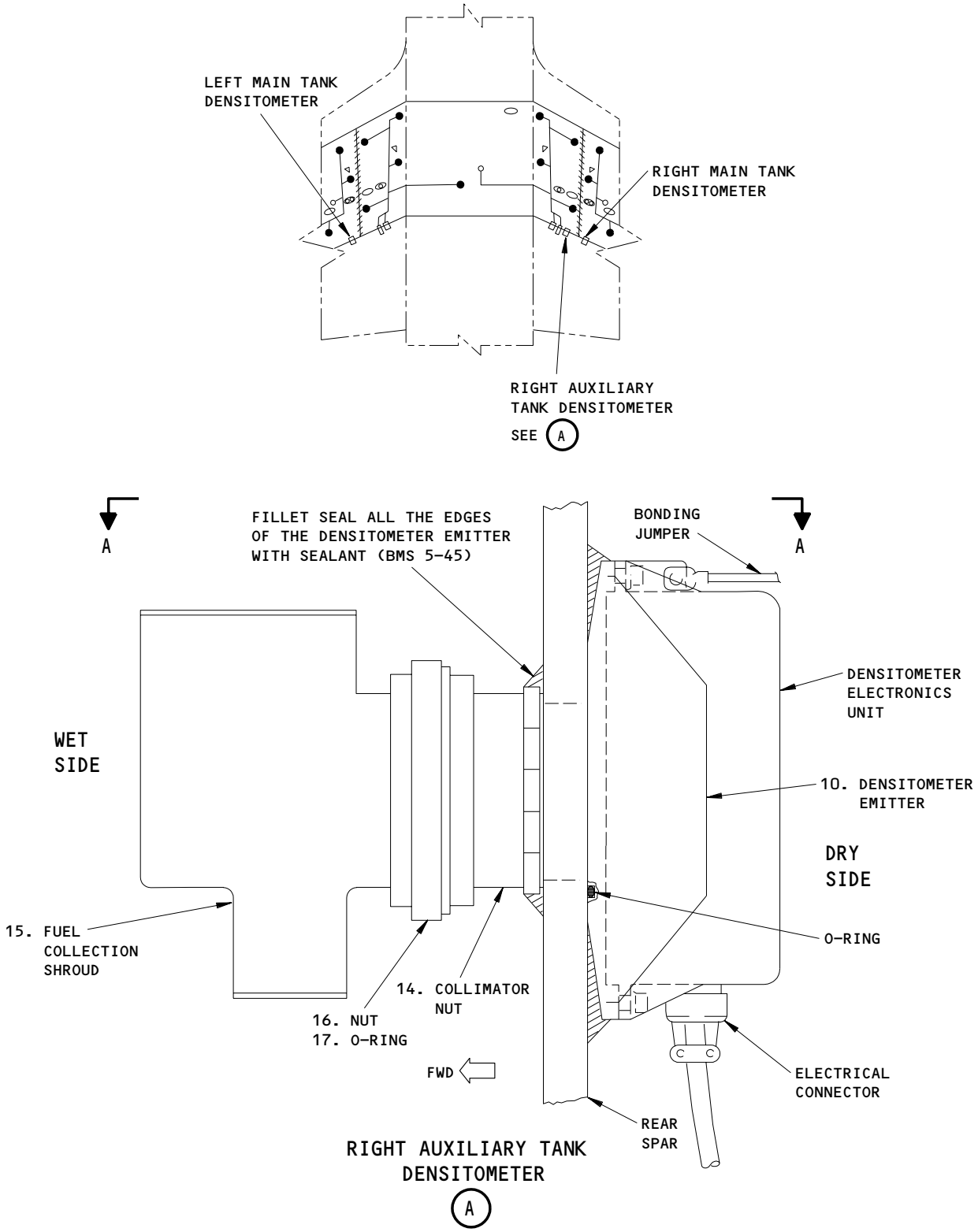

Fuel Collection Shroud
Figure 404 (Sheet 1)

BOEING PROPRIETARY - Copyright (C) - Unpublished Work - See title page for details.

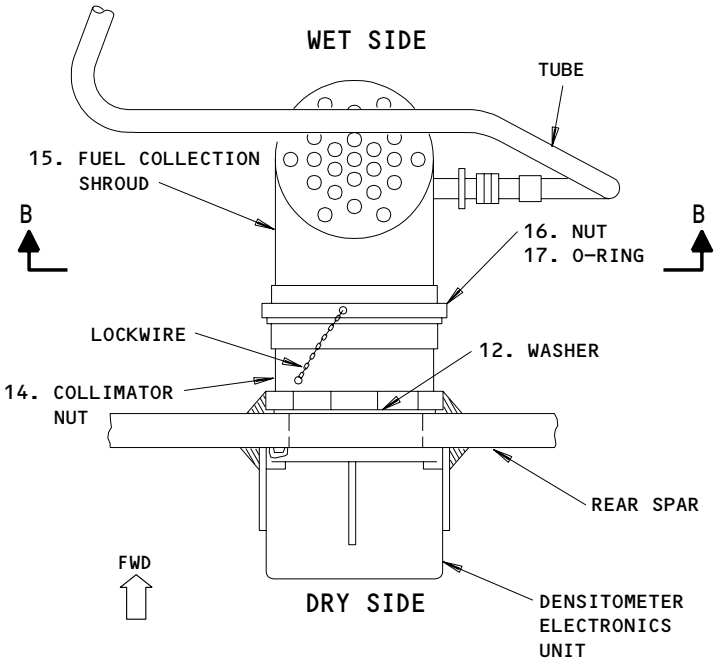

A-A

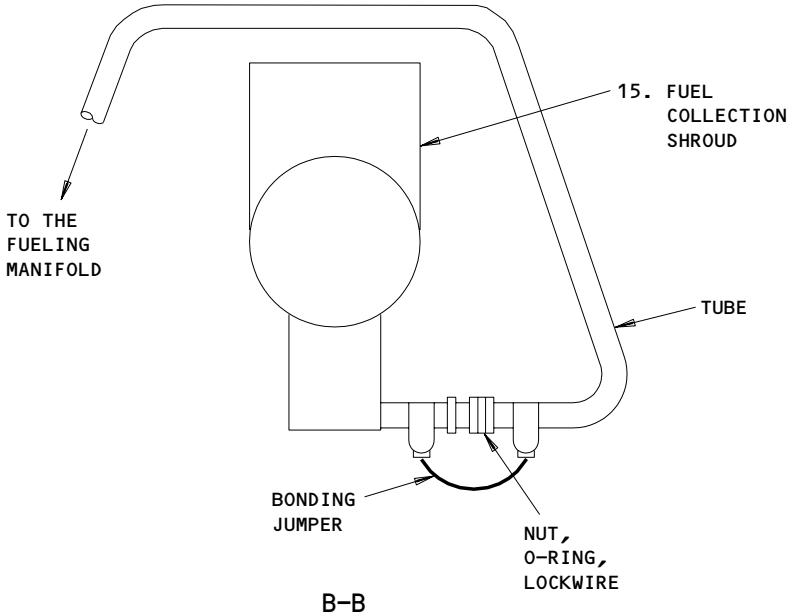

B-B

Fuel Collection Shroud
Figure 404 (Sheet 2)

BOEING PROPRIETARY - Copyright (C) - Unpublished Work - See title page for details.

C. Access
(1) Location Zones
532 Main Tank - Inboard of Rib No. 10 (Left)
631 Center Auxiliary Tank (Right)
632 Main Tank - Inboard of Rib No. 10 (Right)

D. Procedure

S 864-002-001
(1) Open this circuit breaker on the main power distribution panel, P6, circuit breaker and attach a DO-NOT-CLOSE tag:
(a) 6E4, FUELING QTY

S 864-003-001
(2) Open these circuit breakers on the overhead circuit breaker panel, P11, and attach DO-NOT-CLOSE tags:
(a) 11C34, FUEL QTY 1
(b) 11M19, FUEL QTY 2

S 864-004-001
(3) Open this circuit breaker on the APU external power panel, P34, and attach a DO-NOT-CLOSE tag:
(a) 34L2, FUEL QTY REFUEL

S 214-005-001
(4) Make sure the downlocks are installed on the nose and main landing gear (AMM 32-00-20/201).

S 014-006-001

WARNING: USE THE PROCEDURE IN AMM 32-00-15/201 TO INSTALL THE DOOR LOCKS. THE DOORS OPEN AND CLOSE QUICKLY AND CAN CAUSE INJURY TO PERSONS OR DAMAGE TO EQUIPMENT.

(5) Open the doors for the landing gear and install the door locks (AMM 32-00-15/201).

S 034-007-001
(6) Disconnect the electrical connector (5, Fig. 402) from the densitometer electronics unit (6).

S 034-008-001
(7) Remove the screw (7), washer (8) and nut (9) to disconnect the bonding jumper (4) from the densitometer electronics unit (6).

S 034-009-001
(8) Remove the nuts (3) and washers (2) from the mounting studs (1).

BOEING PROPRIETARY - Copyright (C) - Unpublished Work - See title page for details.

S 964-010-001

WARNING: DO NOT STAND ONE FOOT OR LESS, DIRECTLY BEHIND THE DENSITOMETER EMITTER FOR MORE THAN 15 HOURS PER WEEK WHEN THE DENSITOMETER ELECTRONICS UNIT IS REMOVED. THE DENSITOMETER EMITTER CONTAINS A LOW LEVEL RADIOACTIVE SOURCE. IF YOU DO NOT FOLLOW THE PRECAUTIONS, INJURY COULD OCCUR.

(9) Get a replacement densitometer electronics unit (6) prepared for installation.

S 024-011-001

(10) Remove the densitometer electronics unit (6) from the mounting studs (1).

TASK 28-41-03-404-012-001

3. Install the Densitometer Electronics Unit

A. General

(1) Three densitometers supply fuel density information to the FQIS processor to calculate fuel quantity. Each densitometer contains two parts: a densitometer emitter and a densitometer electronics unit.

WARNING: ALL REMOVALS AND INSTALLATIONS OF THE DENSITOMETER EMITTER MUST BE DONE BY OR UNDER THE DIRECT SUPERVISION OF TRAINED AND CERTIFIED PERSONNEL. ALL TRAINED AND CERTIFIED PERSONNEL MUST BE LISTED IN HONEYWELL, INC.'S RADIATION SAFETY TRAINING RECORDS AND AND SHOULD BE LISTED AS TRAINED AND CERTIFIED WITHIN YOUR COMPANY. NO SPECIAL TRAINING IS NECESSARY TO DO OHMMETER MEASUREMENTS OF THE EMITTER'S THREE-PIN CONNECTOR. THE DENSITOMETER EMITTER CONTAINS A LOW LEVEL RADIOACTIVE SOURCE. DISASSEMBLY OF THE DENSITOMETER EMITTER BY UNQUALIFIED PERSONNEL CAN BE DANGEROUS.

(2) The densitometer emitter contains a low level radioactive source (2.5 millicuries, Americium 241). The densitometer emitter has been specially designed such that in all conceivable conditions the radioactive source will be protected. Therefore with the correct training from the Honeywell Inc. your airline can get the approval to safely remove and install the densitometer emitter.

BOEING PROPRIETARY - Copyright (C) - Unpublished Work - See title page for details.

(3) Airline maintenance persons can do maintenance on the densitometer electronics unit.

B. Consumable Materials
(1) A00247 Chromate Type Sealant - BMS 5-95

C. Parts

AMM		NOMENCLATURE	AIPC		
FIG	ITEM		SUBJECT	FIG	ITEM
402	6	Densitometer Electronics Unit	28-41-01	01	30,475

D. References
(1) AMM 20-10-21/601, Electrical Bonding
(2) AMM 20-10-22/701, Metal Surface Cleaning
(3) AMM 24-22-00/201, Electrical Power Control
(4) AMM 28-41-00/501, Fuel Quantity Indicating System (FQIS)
(5) AMM 32-00-15/201, Landing Gear Door Locks

E. Access
(1) Location Zones
532 Main Tank - Inboard of Rib No. 10 (Left)
631 Center Auxiliary Tank (Right)
632 Main Tank - Inboard of Rib No. 10 (Right)

F. Procedure

S 214-013-001
(1) Make sure the fillet seal around all the edges of the densitometer emitter is satisfactory.
(a) If the fillet seal is not satisfactory, do the steps that follow:
1) Clean the surface between the densitometer emitter and the rear spar of the wing (AMM 20-10-22/701).
2) Apply chromate type sealant (BMS 5-95) around all the edges of the densitometer emitter as shown (View A-A, Fig. 402).

S 424-014-001

CAUTION: PUT THE DENSITOMETER ELECTRONICS UNIT ON THE DENSITOMETER EMITTER CORRECTLY. IF THE DENSITOMETER ELECTRONICS UNIT AND THE DENSITOMETER EMITTER ARE NOT ALIGNED CORRECTLY, THE DENSITOMETER CAN NOT MEASURE ACCURATELY.

(2) Put the densitometer electronics unit (6) on the mounting studs (1).

BOEING PROPRIETARY - Copyright (C) - Unpublished Work - See title page for details.

S 434-015-001
(3) Install the washers (2) and nuts (3) on the mounting studs (1).

S 434-016-001
(4) Tighten the nuts (3) to 20-30 pound-inches in the sequence shown (View B, Fig. 402).

S 434-017-001
(5) Tighten the nuts (3) to 70-75 pound-inches in the sequence shown (View B, Fig. 402).

S 434-018-001
(6) Put the bonding jumper (4) in position on the densitometer electronics unit (6) (View A, Fig. 402).

S 434-019-001
(7) Install the screw (7), washer (8) and nut (9) on the bonding jumper (4).

S 214-178-001
(8) Make sure that there is no corrosion on the electrical connectors.

S 434-020-001
(9) Connect the electrical connector (5) to the densitometer electronics unit (6).

S 224-021-001
(10) Make sure the bonding resistance between the densitometer electronics unit (6) and the airplane structure is not more than 0.010 ohms (AMM 20-10-21/601).

S 864-022-001
(11) Remove the DO-NOT-CLOSE tag and close this circuit breaker on the P6 panel:
(a) 6E4, FUELING QTY

S 864-023-001
(12) Remove the DO-NOT-CLOSE tags and close these circuit breakers on the P11 panel:
(a) 11C34, FUEL QTY 1
(b) 11M19, FUEL QTY 2

S 864-024-001
(13) Remove the DO-NOT-CLOSE tag and close this circuit breaker on the P34 panel:
(a) 34L2, FUEL QTY REFUEL

S 864-025-001
(14) Supply electrical power (AMM 24-22-00/201).

BOEING PROPRIETARY - Copyright (C) - Unpublished Work - See title page for details.

S 744-026-001

(15) Do the fuel quantity BITE procedure (AMM 28-41-00/501).

S 414-027-001

WARNING: USE THE PROCEDURE IN AMM 32-00-15/201 TO REMOVE THE DOOR LOCKS. THE DOORS OPEN AND CLOSE QUICKLY AND CAN CAUSE INJURY TO PERSONS OR DAMAGE TO EQUIPMENT.

(16) Remove the door locks from the landing gear doors and close the doors (AMM 32-00-15/201).

S 864-028-001

(17) Remove electrical power if it is not necessary (AMM 24-22-00/201).

TASK 28-41-03-004-133-001

4. Remove the Densitometer Emitter

A. General

(1) Three densitometers supply fuel density information to the FQIS processor to calculate fuel quantity. Each densitometer contains two parts: a densitometer emitter and a densitometer electronics unit.

WARNING: ALL REMOVALS AND INSTALLATIONS OF THE DENSITOMETER EMITTER MUST BE DONE BY OR UNDER THE DIRECT SUPERVISION OF TRAINED AND CERTIFIED PERSONNEL. ALL TRAINED AND CERTIFIED PERSONNEL MUST BE LISTED IN HONEYWELL, INC.'S RADIATION SAFETY TRAINING RECORDS AND SHOULD BE LISTED AS TRAINED AND CERTIFIED WITHIN YOUR COMPANY. NO SPECIAL TRAINING IS NECESSARY TO DO OHMMETER MEASUREMENTS OF THE EMITTER'S THREE-PIN CONNECTOR. THE DENSITOMETER EMITTER CONTAINS A LOW LEVEL RADIOACTIVE SOURCE. DISASSEMBLY OF THE DENSITOMETER EMITTER BY UNQUALIFIED PERSONNEL CAN BE DANGEROUS.

(2) The densitometer emitter contains a low level radioactive source (2.5 millicuries, Americium 241). The densitometer emitter has been specially designed such that in all conceivable conditions the radioactive source will be protected. Therefore with the correct training from the Honeywell Inc. your airline can get the approval to safely remove and install the densitometer emitter.

(3) The densitometer emitter is installed on the rear spar of the wing and held in place by the collimator sleeve.

(4) Two persons are necessary to remove the densitometer emitter. One person must be in the fuel tank to remove the collimator sleeve. The other person must be out of the fuel tank at the rear spar of the wing to hold the densitometer emitter in position.

(5) The densitometer emitter contains a low level radioactive source. Do not touch the area around the low level radioactive source.

BOEING PROPRIETARY - Copyright (C) - Unpublished Work - See title page for details.

(6) The Honeywell Handling Procedure Manual publication number CO2-2193-001 must be available at the site where an emitter removal and installation is done.

B. Equipment

(1) Collimator Sleeve Tool - B28004-1

(2) Use one of these:

(a) WG1136T12 - Crow-Foot Wrench, 3 and 5/8 inch, to remove and install collimator ring on emitter WG1136AA02

(b) A32045-24 - Spanner Wrench, to remove and install collimator ring on emitter (optional)

(3) Radiation Survey Instrument - optional - commercially available

C. References

(1) AMM 28-11-00/201, Fuel Tank (Purging and Entry)

(2) AMM 28-11-01/401, Main Tank Access Door

(3) AMM 28-11-02/401, Auxiliary Tank Access Door

(4) AMM 28-26-00/201, Defueling

(5) Honeywell Handling Procedure Manual, Pub. No. CO2-2193-001

D. Access

(1) Location Zones

532 Main Tank - Inboard of Rib No. 10 (Left)
631 Center Auxiliary Tank (Right)
632 Main Tank - Inboard of Rib No. 10 (Right)

(2) Access Panels

532BB Main Tank Access Door (Left)
631BB Auxiliary Tank Access Door (Right)
632BB Main Tank Access Door (Right)

E. Procedure

S 034-134-001

(1) Remove the densitometer electronics unit per the Remove the Densitometer Electronics Unit procedure.

S 654-135-001

(2) Defuel the applicable fuel tank (AMM 28-26-00/201).

S 654-136-001

(3) Drain and purge the applicable fuel tank (AMM 28-11-00/201).

S 014-137-001

(4) For the left main tank densitometer, remove the left main tank access door, 532BB (AMM 28-11-01/401).

S 014-138-001

(5) For the right main tank densitometer, remove the right main tank access door, 632BB (AMM 28-11-01/401).

S 014-139-001

(6) For the right auxiliary tank densitometer, remove the auxiliary tank access door, 631BB (AMM 28-11-02/401).

BOEING PROPRIETARY - Copyright (C) - Unpublished Work - See title page for details.

S 024-140-001

WARNING: DO NOT TOUCH OR DO MAINTENANCE ON THE DENSITOMETER EMITTER UNLESS YOU ARE CORRECTLY TRAINED AND AUTHORIZED BY YOUR AIRLINE. THE DENSITOMETER EMITTER CONTAINS A LOW LEVEL RADIOACTIVE SOURCE. INCORRECT MAINTENANCE CAN BE DANGEROUS TO PERSONS.

(7) The person out of the fuel tank must hold the densitometer emitter (10) in position at the rear spar of the wing (Fig. 403).

S 024-141-001

(8) The person in the fuel tank must do the steps that follow:

WARNING: OBEY THE FUEL TANK ENTRY PRECAUTIONS. FAILURE TO OBEY THE FUEL TANK ENTRY PRECAUTIONS COULD CAUSE INJURY TO PERSONS OR DAMAGE TO EQUIPMENT.

(a) Obey the fuel tank entry precautions (AMM 28-11-00/201).
(b) Go into the applicable fuel tank with the collimator sleeve tool.
(c) For the right auxiliary tank densitometer, do the steps that follow:
  1) Disconnect the bonding jumper that attaches the tube to the fuel collection shroud (View B-B, Fig. 404).
  2) Remove the lockwire, O-ring and nut to disconnect the tube from the fuel collection shroud (View B-B, Fig. 404).
  3) Cut the lockwire that attaches the collimator nut (14) to the nut (16), (View A-A, Fig. 404).
  4) Remove the fuel collection shroud (15) from the nut (16).
  5) Remove the nut (16) and the O-ring (17) from the collimator nut (14).
  6) With the crow-foot wrench or spanner wrench, remove the collimator nut (14) from the densitometer emitter (10).
  7) Remove the washer (12) from the densitometer emitter (10).
  8) Go out of the fuel tank with the washer (12), collimator nut (14), lockwire, and all tools.
(d) For the left and right main tank densitometers, do the steps that follow:
  1) Cut the lockwire that attaches the collimator sleeve (11) to densitometer emitter (10) (View B, Fig. 403).
  2) Remove the collimator sleeve (11) from the densitometer emitter (10) with the collimator sleeve tool.
  3) Remove the washer (12) from the densitometer emitter (10).
  4) Go out of the fuel tank with the washer (12), collimator sleeve (11), lockwire, and collimator sleeve tool.

S 024-142-001

(9) The person out of the fuel tank must remove the densitometer emitter (10) from the rear spar of the wing.

BOEING PROPRIETARY - Copyright (C) - Unpublished Work - See title page for details.

S 284-143-001

WARNING: DO NOT PUT YOUR FINGERS IN THE FUEL CHAMBER OPENING OF THE DENSITOMETER EMITTER. THE FARTHER AWAY FROM LEVEL RADIOACTIVE SOURCE, THE LESS DANGEROUS IT IS.

(10) If the densitometer emitter assembly is physically damaged by accident or fire, it is recommended that a contamination survey for Americium 241 be done on the densitometer emitter (10) with an applicable radiation survey instrument.

NOTE: For normal handling, installation or removal of the densitometer emitter assembly, the use of applicable radiation survey equipment is optional.

S 534-144-001

(11) Install the protective plug (from the replacement densitometer emitter, if used) into the fuel chamber opening of the recently removed densitometer emitter (10) (View A, Fig. 403).

NOTE: If you install the used densitometer emitter back on the airplane (a replacement densitometer emitter is not used) it is not necessary to install the protective plug. Only a replacement densitometer emitter from Honeywell has a protective plug.

S 434-145-001

(12) Loosely assemble the washer (12) and collimator sleeve (11) on the used densitometer emitter (10) if the densitometer emitter is being replaced by a new densitometer emitter.

BOEING PROPRIETARY - Copyright (C) - Unpublished Work - See title page for details.

S 534-146-001

(13) Handle the removed densitometer emitter (10) per the "Special Handling", "PACKAGING FOR SHIPMENT OR STORAGE" and "TRANSFER RECORDS" paragraphs of the Honeywell Handling Procedure Manual, Publication Number CO2-2193-001.

NOTE: If you install the used densitometer emitter back on the airplane (a replacement densitometer emitter is not used) is not necessary to follow the "PACKAGING FOR SHIPMENT OR STORAGE" or "TRANSFER RECORDS" paragraphs in the Handling Procedure Manual (Publication Number CO2-2193-001) for the used densitometer emitter.

(a) Put the densitometer emitter (10) in a plastic bag (a minimum of 6 millimeters thick).

NOTE: If you install the used densitometer emitter back on the airplane (a replacement densitometer emitter is not used) it is not necessary to keep the densitometer emitter in a plastic bag.

(b) Send the box to Honeywell, Inc.

S 164-147-001

(14) Wash your hands with soap and water.

TASK 28-41-03-404-148-001

5. Install the Densitometer Emitter

A. General

(1) Three densitometers supply fuel density information to the FQIS processor to calculate fuel quantity. Each densitometer contains two parts: a densitometer emitter and a densitometer electronics unit.

BOEING PROPRIETARY - Copyright (C) - Unpublished Work - See title page for details.

WARNING: ALL REMOVALS AND INSTALLATIONS OF THE DENSITOMETER EMITTER MUST BE DONE BY OR UNDER THE DIRECT SUPERVISION OF TRAINED AND CERTIFIED PERSONNEL. ALL TRAINED AND CERTIFIED PERSONNEL MUST BE LISTED IN HONEYWELL, INC.'S RADIATION SAFETY TRAINING RECORDS AND SHOULD BE LISTED AS TRAINED AND CERTIFIED WITHIN YOUR COMPANY. NO SPECIAL TRAINING IS NECESSARY TO DO OHMMETER MEASUREMENTS OF THE EMITTER'S THREE-PIN CONNECTOR. THE DENSITOMETER EMITTER CONTAINS A LOW LEVEL RADIOACTIVE SOURCE. DISASSEMBLY OF THE DENSITOMETER EMITTER BY UNQUALIFIED PERSONNEL CAN BE DANGEROUS.

(2) The densitometer emitter contains a low level radioactive source (2.5 millicuries, Americium 241). The densitometer emitter has been specially designed such that in all conceivable conditions the radioactive source will be protected. Therefore with the correct training from the Honeywell Inc. your airline can get the approval to safely remove and install the densitometer emitter.
(3) Two persons are necessary to install the densitometer emitter. One person must be in the fuel tank to install the densitometer emitter and the collimator sleeve. The other person must be out of the fuel tank at the rear spar of the wing to hold the densitometer emitter in position.
(4) The densitometer emitter contains a low level radioactive source. Do not touch the area around the low level radioactive source.
(5) The Honeywell Handling Procedure Manual publication number C02-2193-001 must be available at the site where an emitter removal and installation is done.

B. Equipment
(1) Collimator Sleeve Tool - B28004-1
(2) WG1136T12 - Crow-Foot Wrench, 3 and 5/8 inch, to install the collimator nut on the emitter WG1136AA02
(3) Radiation Survey Instrument - optional - commercially available

C. Consumable Materials
(1) D00553 - Lubricant - PARKER O LUBE
(2) A00247 Chromate Type Sealant - BMS 5-95
(3) A00767 Sealant - Integral Fuel Tank BMS 5-45

BOEING PROPRIETARY - Copyright (C) - Unpublished Work - See title page for details.

D. Parts

AMM		NOMENCLATURE	AIPC		
FIG	ITEM		SUBJECT	FIG	ITEM
403	10	Densitometer Emitter	28-41-01	01	35K,480

E. References
(1) AMM 12-11-01/301, Fuel Tank Pressure Fueling
(2) AMM 20-10-21/601, Electrical Bonding
(3) AMM 20-10-22/701, Metal Surfaces
(4) AMM 28-11-00/201, Fuel Tank (Purging and Entry)
(5) AMM 28-11-01/401, Main Tank Access Door
(6) AMM 28-11-02/401, Auxiliary Tank Access Door
(7) Honeywell Handling Procedure Manual, Pub. No. C02-2193-001

F. Access
(1) Location Zones
532 Main Tank - Inboard of Rib No. 10 (Left)
631 Center Auxiliary Tank (Right)
632 Main Tank - Inboard of Rib No. 10 (Right)

(2) Access Panels
532BB Main Tank Access Door (Left)
631BB Auxiliary Tank Access Door (Right)
632BB Main Tank Access Door (Right)

G. Procedure

S 164-149-001

WARNING: DO NOT TOUCH OR DO MAINTENANCE ON THE DENSITOMETER EMITTER UNLESS YOU ARE CORRECTLY TRAINED AND AUTHORIZED BY YOUR AIRLINE. THE DENSITOMETER EMITTER CONTAINS A LOW LEVEL RADIOACTIVE SOURCE. INCORRECT MAINTENANCE CAN BE DANGEROUS TO PERSONS.

(1) Clean the mounting surface for the densitometer emitter (10) (View B, Fig. 403) on the rear spar of the wing, outside of fuel tank (AMM 20-10-22/701).

BOEING PROPRIETARY - Copyright (C) - Unpublished Work - See title page for details.

S 544-150-001

WARNING: DO NOT PUT YOUR FINGERS IN THE FUEL CHAMBER OPENING OF THE DENSITOMETER EMITTER. THE FARTHER AWAY FROM THE LOW LEVEL RADIOACTIVE SOURCE, THE LESS DANGEROUS IT IS.

(2) Remove the protective plug from the fuel chamber opening of densitometer emitter (10), if installed (View A, Fig. 403).

NOTE: If you install the used emitter back on the airplane (a replacement emitter is not used) you do not have to remove the plug. Only a replacement emitter from Honeywell has a protective plug.

(a) Install the protective plug on the used densitometer emitter (10) if available.

S 034-151-001

(3) Remove the O-ring (13) from the densitometer emitter (10).
(a) When you install the emitter (10) back on the airplane, you must use a new emitter O-ring (13).

S 644-152-001

(4) Lubricate the O-ring (13).

S 434-153-001

(5) Install the new O-ring (13) into the densitometer emitter (10).

S 214-154-001

(6) Make sure the O-ring (13) is installed correctly in the O-ring groove of the densitometer emitter (10).

S 424-155-001

(7) For the densitometer emitters in the left and right main tanks, do the steps that follow:
(a) Install the lockwire on the densitometer emitter (10) per the double twist method to an approximate length of three inches (View B, Fig. 403).
(b) Attach one end of the lockwire to the densitometer emitter (10).
(c) Do not remove the unwanted lockwire at this time.

NOTE: The other end of the lockwire will attach to the collimator sleeve (11) later.

S 424-156-001

(8) The person out of the fuel tank must do the steps that follow:
(a) Install the densitometer emitter (10) through the rear spar of the wing (View A, Fig. 403).

BOEING PROPRIETARY - Copyright (C) - Unpublished Work - See title page for details.

(b) Make sure the densitometer emitter (10) aligns vertically on the rear spar.
(c) Hold the densitometer emitter (10) in position until it is attached from in the fuel tank.

S 424-157-001
(9) The person in the fuel tank must do the steps that follow:

WARNING: OBEY THE FUEL TANK ENTRY PRECAUTIONS. FAILURE TO OBEY THE FUEL TANK ENTRY PRECAUTIONS COULD CAUSE INJURY TO PERSONS OR DAMAGE TO EQUIPMENT.

(a) Obey the fuel tank entry precautions (AMM 28-11-00/201).
(b) For the densitometers in the left and right main tanks, do the steps that follow:
1) Go into the applicable fuel tank with the washer (12), collimator sleeve (11), and collimator sleeve tool.
2) Install the washer (12) on the threaded portion of densitometer emitter (10) (View A, Fig. 403).
3) Install the collimator sleeve (11) on the threaded portion of densitometer emitter (10).
4) Tighten the collimator sleeve (11) by hand.
5) Tighten the collimator sleeve (11) to 30-35 pound-feet with the collimator sleeve tool.
6) Attach the free end of the lockwire from the densitometer emitter (10) to the collimator sleeve (11).
7) Twist the ends of the lockwire to attach.
8) Remove all unwanted lockwire.
9) Apply BMS 5-45 sealant around all the edges of the densitometer emitter in the fuel tank (View B, Fig. 403).
10) Before you go out of the fuel tank, make sure no loose materials (protective plug, lockwire, or tools) are in the fuel tank.
11) Wash your hands with soap and water.
(c) For the right auxiliary tank densitometer, do the steps that follow:
1) Install the washer (12) on the threaded portion of the densitometer emitter (10) (View A-A, Fig. 404).

BOEING PROPRIETARY - Copyright (C) - Unpublished Work - See title page for details.

2) With the crow-foot wrench, install the collimator nut (14) onto the densitometer emitter (10) and tighten to 30-35 pound-feet.
3) Install the fuel collection shroud (15) on the collimator nut (14) with the nut (16) and a new O-ring (17).
4) Connect the tube to the fuel collection shroud (15) with the nut and a new O-ring (View B-B, Fig. 404).
5) Install the lockwire per the double twist method to attach the tube to the fuel collection shroud (15) (View B-B, Fig. 404).
6) Install the bonding jumper between the tube and the fuel collection shroud (15) (View B-B, Fig. 404).
7) Make sure the bonding resistance between the tube and the fuel collection shroud is not more than 0.010 ohms (AMM 20-10-21/601).
8) Install the lockwire per the double twist method to attach the nut to the collimator nut (View A-A, Fig. 404).
9) Apply BMS 5-45 sealant around all the edges of the densitometer emitter in the fuel tank (View A, Fig. 404).
10) Before you go out of the fuel tank, make sure no loose materials (protective plug, lockwire, or tools) are in the fuel tank.
11) Wash your hands with soap and water.

S 414-160-001
(10) For the left main tank densitometer, install the left main tank access door, 532BB (Fig. 401) (AMM 28-11-01/401).

S 414-161-001
(11) For the right main tank densitometer, install the right main tank access door, 632BB (Fig. 401) (AMM 28-11-01/401).

S 414-162-001
(12) For the right auxiliary tank densitometer, install the auxiliary tank access door, 631BB (Fig. 401) (AMM 28-11-02/401).

BOEING PROPRIETARY - Copyright (C) - Unpublished Work - See title page for details.

S 224-163-001
(13) Make sure the bonding resistance between the densitometer emitter (10) and the airplane structure is not more than 0.010 ohms (AMM 20-10-21/601).

S 394-164-001
(14) Apply BMS 5-95 sealant around all the edges of the densitometer emitter (10) (View A-A, Fig. 402).

S 434-165-001
(15) Install the densitometer electronics unit per the Install the Densitometer Electronics Unit procedure.

S 654-166-001
(16) Refuel the applicable fuel tank, if no more work is necessary (AMM 12-11-01/301).

S 214-167-001
(17) Make sure there is no fuel leakage at the densitometer.

BOEING PROPRIETARY - Copyright (C) - Unpublished Work - See title page for details.

FQIS DENSITOMETER - REMOVAL/INSTALLATION

1. General
   A. The densitometer gives fuel density information to the FQIS processor for fuel quantity calculation.
   B. There are three densitometers. One in each main fuel tank, and one in the auxiliary fuel tank. The densitometers are found at the low point in the fuel tank, aft of the compensators.
   C. This procedure contains two tasks. The first task removes the densitometer. The second task installs the densitometer.

TASK 28-41-03-004-001-002

2. Remove the Densitometer (Fig. 401)
   A. References
      (1) AMM 28-11-00/201, Fuel Tank (Purging and Entry)
      (2) AMM 28-11-01/401, Main Tank Access Door
      (3) AMM 28-11-02/401, Center Tank Access Door
      (4) AMM 28-11-07/401, Fuel Tank Baffle Door
      (5) AMM 28-26-00/201, Defueling
   B. Access
      (1) Location Zones
          136 Environmental Contorl System Bay (Right)
          532 Main Tank - Inboard of Rib No. 10 (Left)
          632 Main Tank - Inboard of Rib No. 10 (Right)

      (2) Access Panels
          136KZ Auxiliary Tank Access Door (Center)
          532AZ Fuel Tank Baffle Door (Left)
          532BB Main Tank Access Door (Left)
          632AZ Fuel Tank Baffle Door (Right)
          632BB Main Tank Access Door (Right)

   C. Procedure

      S 654-002-002
      (1) Defuel the applicable fuel tank (AMM 28-26-00/201).

BOEING PROPRIETARY - Copyright (C) - Unpublished Work - See title page for details.

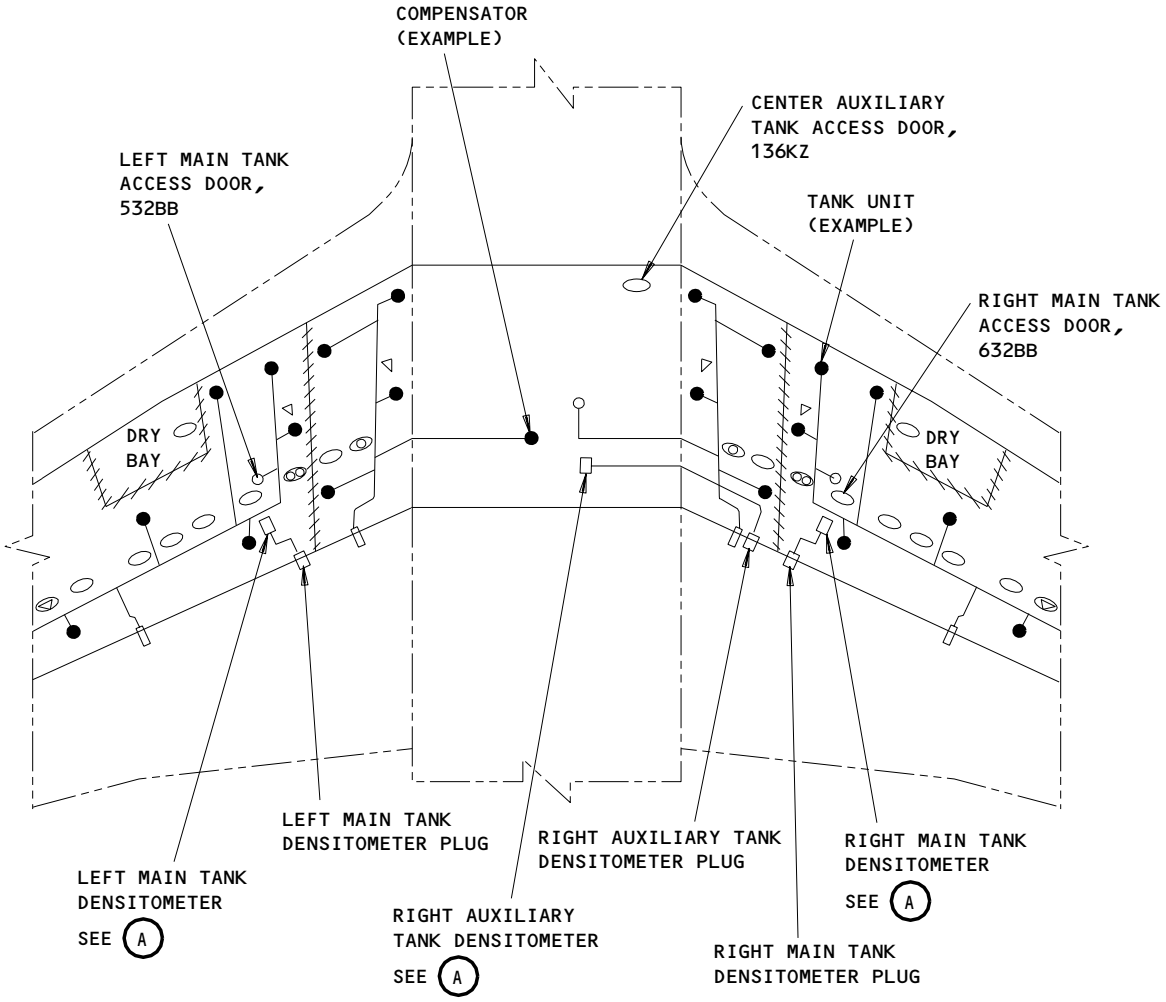

Densitometer Installation
Figure 401 (Sheet 1)

BOEING PROPRIETARY - Copyright (C) - Unpublished Work - See title page for details.

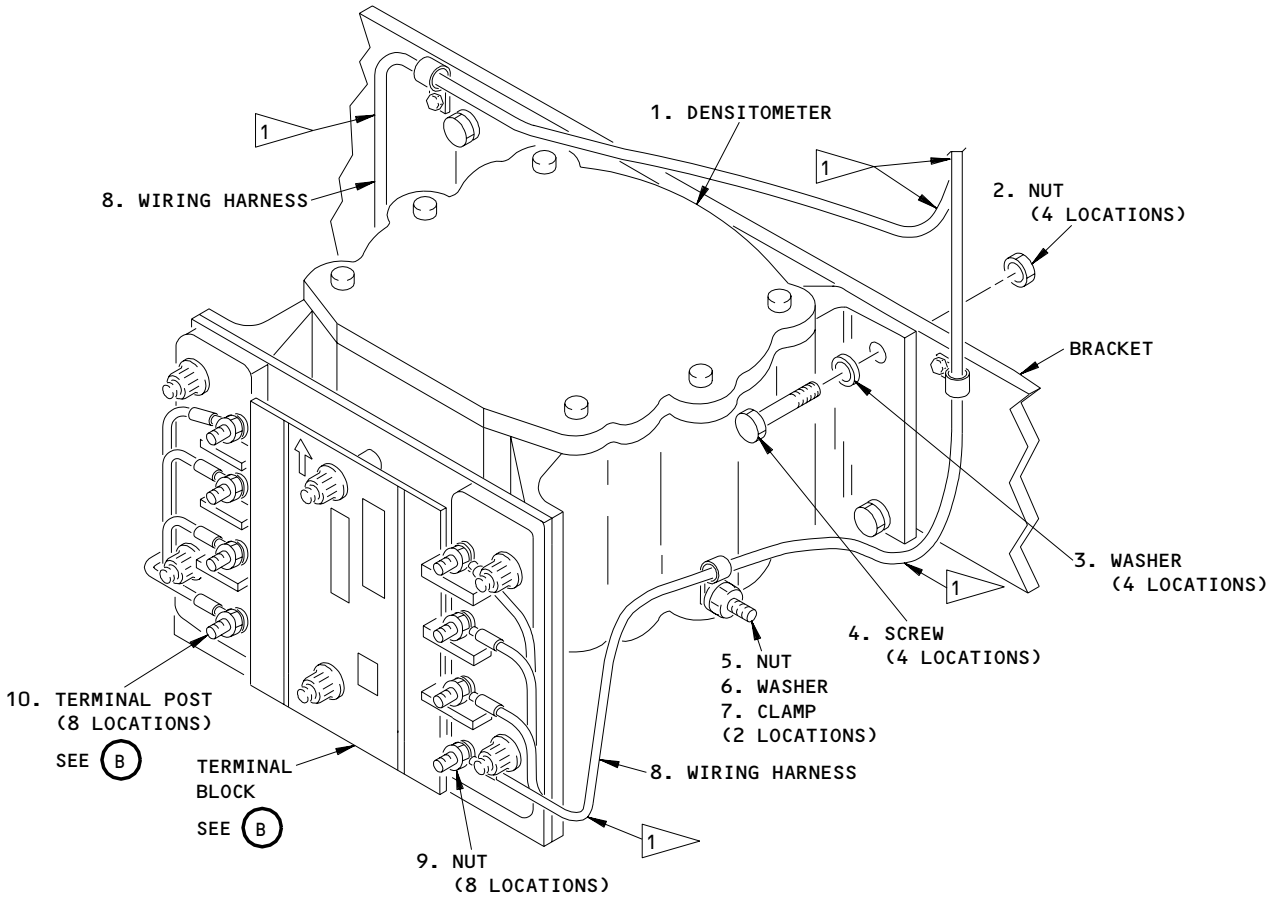

LEFT MAIN, RIGHT MAIN, OR AUXILIARY TANK DENSITOMETER

A

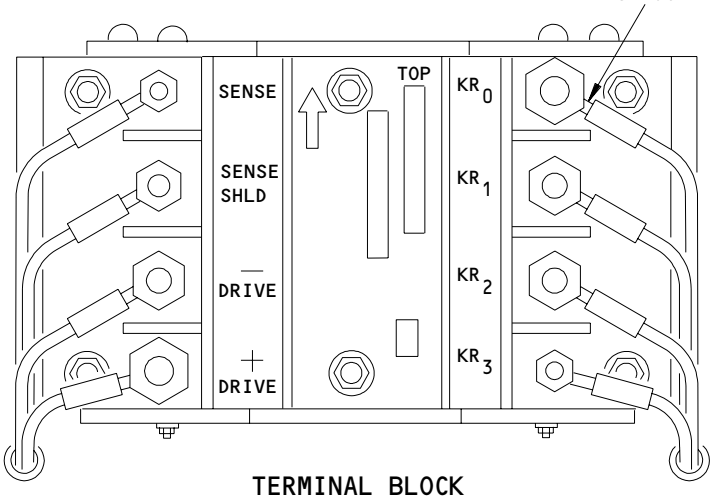

TERMINAL BLOCK

B

1 ADJUST WIRE SLACK TO MAINTAIN A CLEARANCE OF 0.5 INCH BETWEEN WIRE AND COMPONENTS OR STRUCTURE. IF 0.5 INCH CLEARANCE IS NOT POSSIBLE YOU MUST MAINTAIN A MINIMUM OF 0.125 INCH.

Densitometer Installation
Figure 401 (Sheet 2)

BOEING PROPRIETARY - Copyright (C) - Unpublished Work - See title page for details.

S 654-003-002

WARNING: OBEY THE PURGING AND FUEL TANK ENTRY PRECAUTIONS. FAILURE TO OBEY THE PRECAUTIONS COULD CAUSE INJURIES TO PERSONS OR DAMAGE TO EQUIPMENT.

(2) Do the Purging and Fuel Tank Entry procedure for the applicable fuel tank (AMM 28-11-00/201).

S 864-004-002

(3) Open this circuit breaker on the main power distribution panel, P6, and attach a DO-NOT-CLOSE tag:
(a) 6E4, FUELING QTY

S 864-005-002

(4) Open these circuit breakers on the overhead circuit breaker panel, P11, and attach DO-NOT-CLOSE tags:
(a) 11C34, FUEL QTY 1
(b) 11M19, FUEL QTY 2

S 864-006-002

(5) Open this circuit breaker on the APU external power panel, P34, and attach a DO-NOT-CLOSE tag:
(a) 34L2, FUEL QTY REFUEL

S 014-007-002

CAUTION: BE CAREFUL WHEN YOU REMOVE THE MAIN TANK ACCESS DOOR, 541AB. IF YOU ARE NOT CAREFUL, DAMAGE TO THE FUEL MEASURING STICK CAN OCCUR.

(6) For the densitometer in the left main fuel tank, remove the left main tank access door, 532BB (AMM 28-11-01/401).
(a) Remove the left fuel tank baffle door, 532AZ (AMM 28-11-07/401).

BOEING PROPRIETARY - Copyright (C) - Unpublished Work - See title page for details.

S 014-008-002

CAUTION: BE CAREFUL WHEN YOU REMOVE THE MAIN TANK ACCESS DOOR, 641AB. IF YOU ARE NOT CAREFUL, DAMAGE TO THE FUEL MEASURING STICK CAN OCCUR.

(7) For the densitometer in the right main fuel tank, remove the right main tank access door, 632BB (AMM 28-11-01/401).
(a) Remove the right fuel tank baffle door, 632AZ (AMM 28-11-07/401).

S 014-009-002
(8) For the densitometer in the auxiliary fuel tank, remove the auxiliary tank access door, 136KZ (AMM 28-11-02/401).

S 014-010-002

WARNING: OBEY THE PURGING AND FUEL TANK ENTRY PRECAUTIONS. FAILURE TO OBEY THE PRECAUTIONS COULD CAUSE INJURIES TO PERSONS OR DAMAGE TO EQUIPMENT.

(9) Go into the applicable fuel tank.

S 034-011-002
(10) Remove the nuts (9) that attach the wiring terminals (11) to the terminal posts (10), on the terminal block of the densitometer.

S 344-040-002
(11) Remove the nuts (5), washers (6), and clamps (7) that attach the wiring harness (8) to the densitometer (1).

S 034-012-002
(12) Move the wiring terminals (11) and the wiring harness (8) away from the densitometer (1).

S 034-013-002
(13) Remove the screws (4), washers (3), and nuts (2) that attach the densitometer (1) the bracket.

S 024-014-002
(14) Remove the densitometer from the fuel tank.

TASK 28-41-03-404-014-002
3. Install the Densitometer (Fig. 401)
A. References
(1) AMM 12-11-01/301, Fuel Tank Pressure Fueling

BOEING PROPRIETARY - Copyright (C) - Unpublished Work - See title page for details.

(2) AMM 20-10-21/601, Electrical Bonding
(3) AMM 24-22-00/201, Electrical Power Control
(4) AMM 28-11-00/201, Fuel Tanks
(5) AMM 28-11-01/401, Main Tank Access Door
(6) AMM 28-11-07/401, Fuel Tank Baffle Door
(7) AMM 28-41-00/501, Fuel Quantity Indicating System
(8) SWPM 20-10-11, Installation of Electrical Wires and Harnesses
(9) SWPM 20-10-12, Wire Harness Supports
(10) SWPM 20-10-19, Wire Separation
(11) SWPM 20-20-00, Electrical Bonds and Grounds

B. Access

(1) Location Zones

136	Environmental Control System Bay (Right)
532	Main Tank - Inboard of Rib No. 10 (Left)
632	Main Tank - Inboard of Rib No. 10 (Right)

(2) Access Panels

136KZ	Auxiliary Tank Access Door (Center)
532AZ	Fuel Tank Baffle Door (Left)
532BB	Main Tank Access Door (Left)
632AZ	Auxiliary Tank Access Door (Right)
632BB	Main Tank Access Door (Right)

C. Procedure

S 014-016-002

WARNING: OBEY THE PURGING AND FUEL TANK ENTRY PRECAUTIONS. FAILURE TO OBEY THE PRECAUTIONS COULD CAUSE INJURIES TO PERSONS OR DAMAGE TO EQUIPMENT.

(1) Go into the fuel tank.

S 104-037-002

(2) Use one of these methods to clean the surfaces that touch between the densitometer and the support bracket:
(a) Type I - Hand Application of Abrasives (SWPM 20-20-00).
(b) Type V - Solvent Cleaning of Bare, Clad, or Plated Metal (SWPM 20-20-00).

S 424-017-002

(3) Put the densitometer (1) in position on the bracket (Fig. 401, View A).

S 434-018-002

(4) Install the screws (4), washers (3), and nuts (2) to attach the densitometer (1) to the bracket.

BOEING PROPRIETARY - Copyright (C) - Unpublished Work - See title page for details.

S 764-038-002

(5) Measure the resistance between the densitometer and the bracket with the "Bonding Measurments in Explosion Hazard Areas" procedure found in SWPM 20-20-00.
   (a) Make sure the resistance between the densitometer and the bracket shall not exceed 0.010 ohm (AMM 20-10-21/601).

S 434-019-002

(6) Put the wiring terminals (11) on the terminal posts (10) with the correct dimensions, found on the terminal block of the densitometer.

NOTE: The terminal posts (10) have different dimensions to prevent errors in installation.

S 434-020-002

(7) Install the nuts (9) to attach the wiring terminals (11) to the terminal posts (10).

S 434-031-002

CAUTION: MAKE SURE YOU INSTALL EACH NUT ON THE WIRING TERMINALS TO THE CORRECT TORQUE. IF YOU TIGHTEN THE NUTS TO MORE THAN THE SPECIFIED TORQUE, DAMAGE TO THE DENSITOMETER TERMINAL BLOCK CAN OCCUR.

(8) Tighten the nuts (9) to these limits:

TERMINAL	TORQUE VALVE	NUT SIZE
SENSE	6-8 POUND-INCHES	0.112-40
SENSE SHIELD	12-15 POUND-INCHES	0.138-32
DRIVE -	15-20 POUND-INCHES	0.164-32
DRIVE +	25-30 POUND-INCHES	0.190-32
KR0	25-30 POUND-INCHES	0.190-32
KR1	15-20 POUND-INCHES	0.164-32
KR2	12-15 POUND-INCHES	0.138-32
KR3	6-8 POUND-INCHES	0.112-40

BOEING PROPRIETARY - Copyright (C) - Unpublished Work - See title page for details.

S 434-041-002
(9) Put the wiring harness (8) in position and install the clamps (7), washers (6), and nuts (5) to the side of the densitometer (1) (Fig. 401, View A) (SWPM 20-10-11, SWPM 20-10-12, SWPM 20-10-19).

S 434-042-002
(10) Tighten the wire clamps (7) on the densitometer (1).

NOTE: Adjust wire slack to maintain a clearance of 0.5 inch between wire and components or structure. If 0.5 inch clearance is not possible, you must maintain a minimum of 0.125 inch clearance.

S 214-022-002
(11) Before you go out of the fuel tank, make sure there are no unwanted materials in the fuel tank.

S 414-046-002
(12) Install the applicable fuel tank baffle door, left 532AZ, right 632AZ (AMM 28-11-02/401).

S 414-032-002

CAUTION: BE CAREFUL WHEN YOU INSTALL THE MAIN TANK ACCESS DOOR, 541AB. IF YOU ARE NOT CAREFUL, DAMAGE TO THE FUEL MEASURING STICK COULD OCCUR.

(13) For the densitometer in the left main fuel tank, install the left main tank access door, 532BB (AMM 28-11-01/401).

S 414-033-002

CAUTION: BE CAREFUL WHEN YOU INSTALL THE MAIN TANK ACCESS DOOR, 641AB. IF YOU ARE NOT CAREFUL, DAMAGE TO THE FUEL MEASURING STICK COULD OCCUR.

(14) For the densitometer in the right main fuel tank, install the right main tank access door, 632BB (AMM 28-11-01/401).

S 414-025-002
(15) For the densitometer in the center fuel tank, install the auxiliary tank access door, 136KZ (AMM 28-11-02/401).

S 864-026-002
(16) Remove the DO-NOT-CLOSE tag and close this circuit breaker on the P6 panel:
(a) 6E4, FUELING QTY

BOEING PROPRIETARY - Copyright (C) - Unpublished Work - See title page for details.

S 864-018-002
(17) Remove the DO-NOT-CLOSE tag and close these circuit breakers on the P11 panel:
(a) 11C34, FUEL QTY 1
(b) 11M19, FUEL QTY 2

S 864-027-002
(18) Remove the DO-NOT-CLOSE tag and close this circuit breaker on the P34 panel:
(a) 34L2, FUEL QTY REFUEL

S 864-043-002
(19) Supply electrical power (AMM 24-22-00/201).

S 744-044-002
(20) Do the fuel quantity BITE procedure "Self Test ?" (AMM 28-41-00/501).

S 654-028-002
(21) Refuel the applicable fuel tank if no more work is necessary (AMM 12-11-01/301).

S 864-045-002
(22) Remove electrical power if it is not necessary (AMM 24-22-00/201).

BOEING PROPRIETARY - Copyright (C) - Unpublished Work - See title page for details.

FUEL QUANTITY INDICATOR - REMOVAL/INSTALLATION

1. General
   A. The fuel quantity indicator shows the fuel quantity for each fuel tank and the total fuel quantity for all the fuel tanks. The fuel temperature indicator is found in the fuel quantity indicator. The fuel temperature indicator shows the fuel temperature for the fuel tanks.
   B. This procedure contains two tasks. The first task removes the fuel quantity indicator. The second task installs the fuel quantity indicator.

TASK 28-41-04-004-005

2. Remove the Fuel Quantity Indicator (Fig. 401)
   A. References
      (1) AMM 20-41-01/201, Electrostatic Discharge Sensitive Devices
   B. Access
      (1) Location Zones
          211 Control Cabin - Section 41 (Left)
          212 Control Cabin - Section 41 (Right)

   C. Procedure

S 024-037

WARNING: WHEN YOU REMOVE AN ELECTROSTATIC DISCHARGE SENSITIVE (ESDS) UNIT, MAKE SURE YOU PUT COVERS ON THE ELECTRICAL CONNECTORS. USE ELECTROSTATIC DISCHARGE (ESD) SAFE DUST CAPS. IF THE CONNECTORS DO NOT HAVE COVERS ON THEM, INJURY TO PERSONS AND DAMAGE TO THE CONNECTOR CAN OCCUR.

CAUTION: YOU MUST CAREFULLY DO THE STEPS IN THE TASK BELOW TO REMOVE THE FUEL QUANTITY INDICATOR. A FAILURE TO DO THE STEPS CORRECTLY CAN CAUSE DAMAGE TO THE EQUIPMENT.

(1) Do the "Removal of ESDS Metal Encased Units" task to remove the applicable fuel quantity indicator (AMM 20-41-01/201).

S 864-038

(2) Open this circuit breaker on the main power distribution panel, P6, and attach a DO-NOT-CLOSE tag:
    (a) 6E4, FUELING QTY

S 864-007

(3) Open these circuit breakers on the overhead circuit breaker panel, P11, and attach DO-NOT-CLOSE tags:
    (a) 11B7, STBY INSTR LIGHTS
    (b) 11C34, FUEL QTY 1

BOEING PROPRIETARY - Copyright (C) - Unpublished Work - See title page for details.

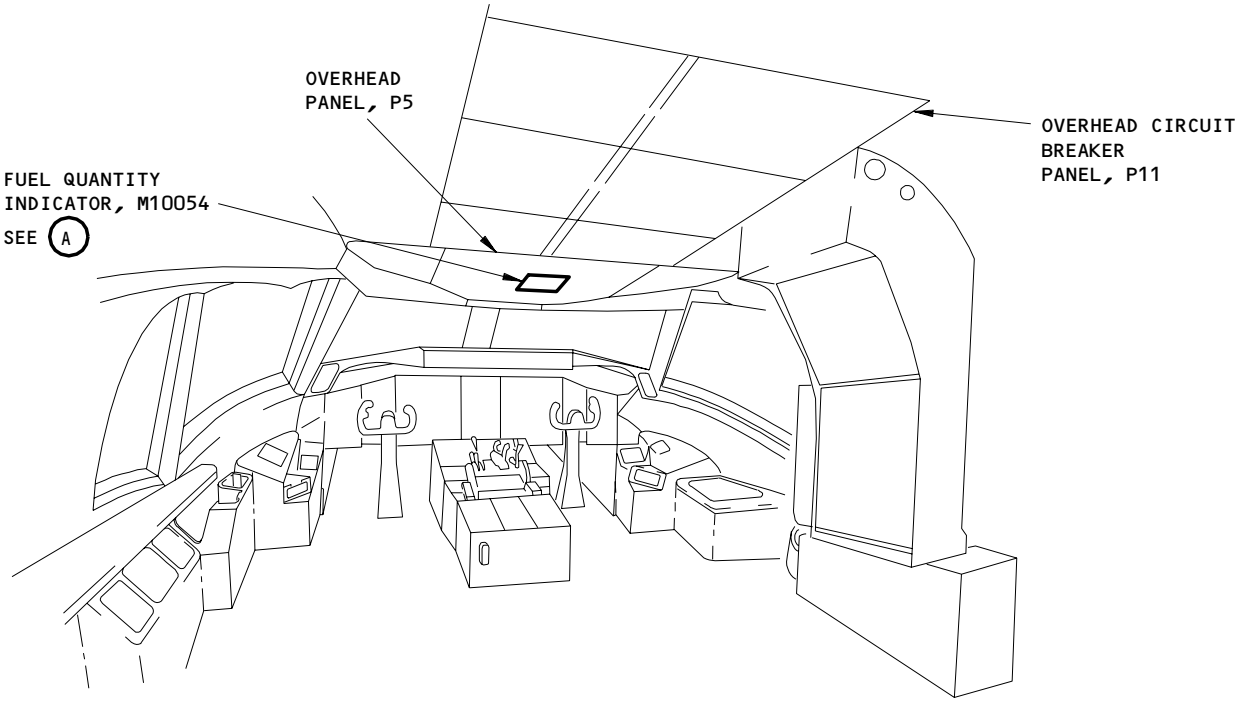

FLIGHT COMPARTMENT

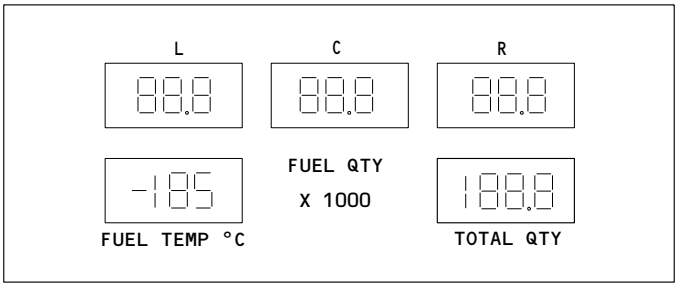

FUEL QUANTITY INDICATOR, M10054

A

Fuel Quantity Indicator Installation
Figure 401

BOEING PROPRIETARY - Copyright (C) - Unpublished Work - See title page for details.

(c) 11M12, FUEL TEMP
(d) 11M19, FUEL QTY 2

S 864-008
(4) Open this circuit breaker on the APU external power panel, P34, and attach a DO-NOT-CLOSE tag:
(a) 34L2, FUEL QTY REFUEL

S 034-001
(5) Remove the screws from the fuel quantity indicator.

S 024-009
(6) Remove the fuel quantity indicator from the overhead panel, P5.

S 034-011
(7) Disconnect the electrical connectors from the fuel quantity indicator.

TASK 28-41-04-404-012
3. Install the Fuel Quantity Indicator (Fig. 401)
A. References
(1) AMM 20-41-01/201, Electrostatic Discharge Sensitive Devices
(2) AMM 24-22-00/201, Electrical Power Control
(3) AMM 28-41-00/501, Fuel Quantity Indicating System (FQIS)
B. Access
(1) Location Zones
211 Control Cabin - Section 41 (Left)
212 Control Cabin - Section 41 (Right)

C. Procedure

S 864-031

WARNING: WHEN YOU INSTALL AN ELECTROSTATIC DISCHARGE SENSITIVE (ESDS) UNIT, MAKE SURE THE COMPONENT AND MOUNT RACK TOUCH EACH OTHER. THEN REMOVE THE ELECTROSTATIC DISCHARGE (ESD) DUST CAPS. THIS LETS THE UNIT RELEASE THE ELECTROSTATIC DISCHARGE. THIS WILL PREVENT INJURY TO PERSONS AND DAMAGE TO THE UNIT ELECTRICAL CONNECTORS.

CAUTION: YOU MUST CAREFULLY DO THE STEPS IN THE TASK BELOW TO INSTALL THE FUEL QUANTITY INDICATOR. A FAILURE TO DO THE STEPS CORRECTLY CAN CAUSE DAMAGE TO THE EQUIPMENT.

(1) Do the "Installation of ESDS Metal Encased Units" task to install the applicable fuel quantity indicator (AMM 20-41-01/201).

S 424-039
(2) Connect the electrical connectors to the fuel quantity indicator.

BOEING PROPRIETARY - Copyright (C) - Unpublished Work - See title page for details.

S 424-002
(3) Install the fuel quantity indicator in the P5 panel.

S 434-004
(4) Install the screws in the fuel quantity indicator.

S 864-014
(5) Remove the DO-NOT-CLOSE tag and close this circuit breaker on the P6 panel:
(a) 6E4, FUELING QTY

S 864-015
(6) Remove the DO-NOT-CLOSE tags and close these circuit breakers on the P11 panel:
(a) 11B7, STBY INSTR LIGHTS
(b) 11C34, FUEL QTY 1
(c) 11M12, FUEL TEMP
(d) 11M19, FUEL QTY 2

S 864-016
(7) Remove the DO-NOT-CLOSE tag and close this circuit breaker on the P34 panel:
(a) 34L2, FUEL QTY REFUEL

S 864-017
(8) Supply electrical power (AMM 24-22-00/201).

S 724-018
(9) Do a check of the flight compartment indicators (AMM 28-41-00/501).

S 744-019
(10) Do the fuel quantity BITE procedure (AMM 28-41-00/501).

S 864-020
(11) Remove electrical power, if it is not necessary (AMM 24-22-00/201).

BOEING PROPRIETARY - Copyright (C) - Unpublished Work - See title page for details.

FQIS LOAD SELECT INDICATOR - REMOVAL/INSTALLATION

1. General
   A. A load select indicator for each fuel tank is installed on the fueling control panel, P28, at the fueling station on the left wing.
   B. This procedure contains two tasks. The first task removes the load select indicator. The second task installs the load select indicator.

TASK 28-41-06-004-001

2. Remove the Load Select Indicator (Fig. 401)
   A. References
      (1) AMM 06-44-00/201, Wing Access Doors and Panels
      (2) AMM 20-41-01/201, Electrostatic Discharge Sensitive Devices
   B. Access
      (1) Location Zone
          521 Leading Edge to Front Spar (Left)

      (2) Access Panel
          521QB Fueling Station Door (Left)

   C. Procedure

S 024-035

WARNING: WHEN YOU REMOVE AN ELECTROSTATIC DISCHARGE SENSITIVE (ESDS) UNIT, MAKE SURE YOU PUT COVERS ON THE ELECTRICAL CONNECTORS. USE ELECTROSTATIC DISCHARGE (ESD) SAFE DUST CAPS. IF THE CONNECTORS DO NOT HAVE COVERS ON THEM, INJURY TO PERSONS AND DAMAGE TO THE CONNECTOR CAN OCCUR.

CAUTION: YOU MUST CAREFULLY DO THE STEPS IN THE TASK BELOW TO REMOVE THE FQIS LOAD SELECT INDICATOR. A FAILURE TO DO THE STEPS CORRECTLY CAN CAUSE DAMAGE TO THE EQUIPMENT.

(1) Do the "Removal of ESDS Metal Encased Units" task to remove the FQIS load select indicator (AMM 20-41-01/201).

S 864-037

(2) Open this circuit breaker on the main power distribution panel, P6, and attach a DO-NOT-CLOSE tag:

NOTE: If you remove more than one indicator at the same time be sure to record the fuel quantity indicated on each indicator.

(a) 6E4, FUELING QTY

BOEING PROPRIETARY - Copyright (C) - Unpublished Work - See title page for details.

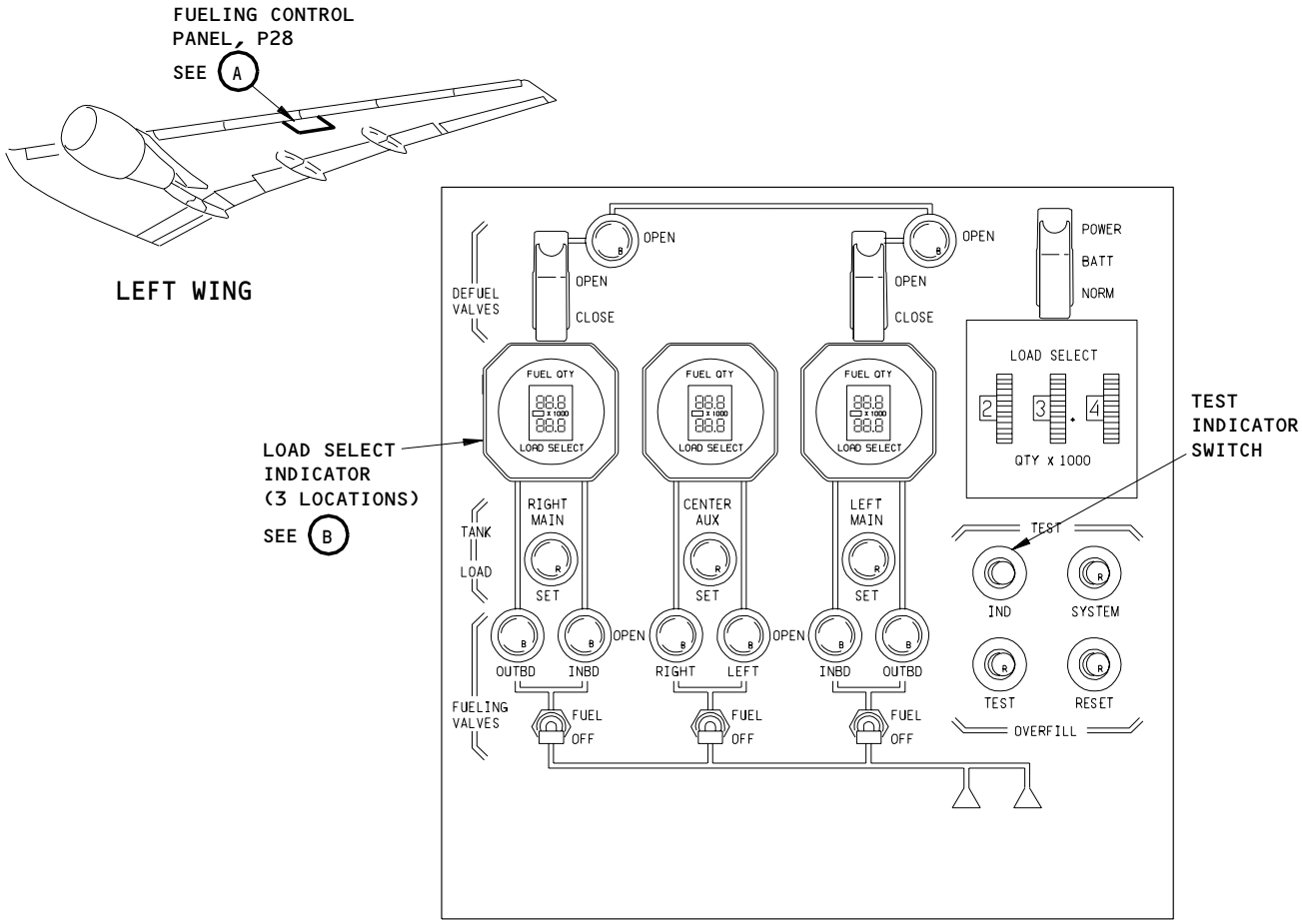

FUELING CONTROL PANEL, P28

A

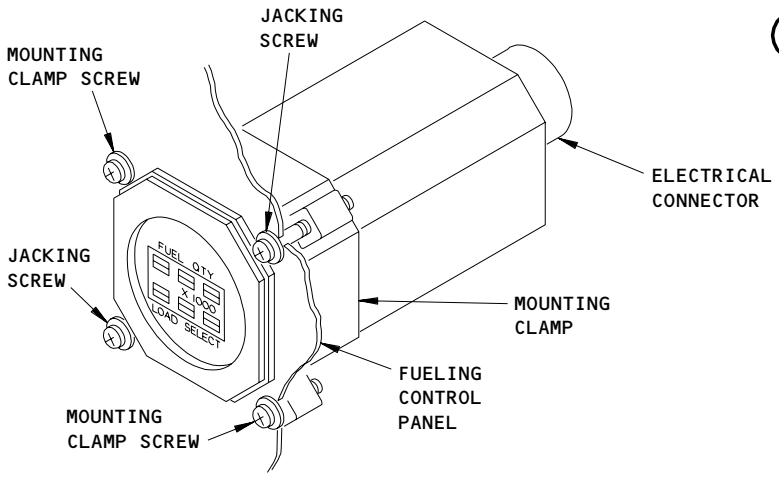

LOAD SELECT INDICATOR

B

Load Select Indicator Installation
Figure 401

BOEING PROPRIETARY - Copyright (C) - Unpublished Work - See title page for details.

S 864-003
(3) Open these circuit breakers on the overhead circuit breaker panel, P11, and attach DO-NOT-CLOSE tags:
(a) 11C34, FUEL QTY 1
(b) 11M19, FUEL QTY 2

S 864-004
(4) Open this circuit breaker on the APU external power panel, P34, and attach a DO-NOT-CLOSE tag:
(a) 34L2, FUEL QTY REFUEL

S 014-005
(5) Open the fueling station door, 521QB (AMM 06-44-00/201).

S 034-009
(6) Loosen the jacking screws on the load select indicator (View B).

NOTE: If you remove more than one indicator at the same time put a tag on each matching indicator and connector to make sure they are reconnected correctly.

S 024-021
(7) Remove the load select indicator from the fueling control panel.

S 034-010
(8) Disconnect the electrical connector from the load select indicator.

TASK 28-41-06-404-011
3. Install the Load Select Indicator (Fig. 401)
A. References
(1) AMM 06-44-00/201, Wing Access Doors and Panels
(2) AMM 20-41-01/201, Electrostatic Discharge Sensitive Devices
(3) AMM 24-22-00/201, Electrical Power - Control
B. Access
(1) Location Zone
521 Leading Edge to Front Spar (Left)

(2) Access Panel
521QB Fueling Station Door (Left)

BOEING PROPRIETARY - Copyright (C) - Unpublished Work - See title page for details.

C. Procedure

S 424-036

WARNING: WHEN YOU INSTALL AN ELECTROSTATIC DISCHARGE SENSITIVE (ESDS) UNIT, MAKE SURE THE COMPONENT AND MOUNT RACK TOUCH EACH OTHER. THEN REMOVE THE ELECTROSTATIC DISCHARGE (ESD) DUST CAPS. THIS LETS THE UNIT RELEASE THE ELECTROSTATIC DISCHARGE. THIS WILL PREVENT INJURY TO PERSONS AND DAMAGE TO THE UNIT ELECTRICAL CONNECTORS.

CAUTION: YOU MUST CAREFULLY DO THE STEPS IN THE TASK BELOW TO INSTALL THE FQIS LOAD SELECT INDICATOR. A FAILURE TO DO THE STEPS CORRECTLY CAN CAUSE DAMAGE TO THE EQUIPMENT.

(1) Do the "Installation of ESDS Metal Encased Units" task to install the FQIS load select indicator (AMM 20-41-01/201).

S 864-038
(2) Connect the electrical connector to the load select indicator (View B).

NOTE: Remove all the tags attached to the indicators and the matching connectors.

S 424-022
(3) Install the load select indicator in the fueling control panel (View A).

S 434-013
(4) Tighten the jacking screws on the load select indicator (View B).

S 864-014
(5) Remove the DO-NOT-CLOSE tag and close this circuit breaker on the P6 panel:
(a) 6E4, FUELING QTY

S 864-015
(6) Remove the DO-NOT-CLOSE tags and close these circuit breakers on the P11 panel:
(a) 11C34, FUEL QTY 1
(b) 11M19, FUEL QTY 2

S 864-016
(7) Remove the DO-NOT-CLOSE tag and close this circuit breaker on the P34 panel:
(a) 34L2, FUEL QTY REFUEL

BOEING PROPRIETARY - Copyright (C) - Unpublished Work - See title page for details.

S 864-025
(8) Supply electrical power (AMM 24-22-00/201).

S 864-023
(9) Push the TEST IND switch on the fueling control panel (View A).

S 214-024
(10) Make sure 88.8 shows in the top and bottom displays on the load select indicators.

NOTE: If you remove more than one indicator at the same time, do a check to make sure that the fuel quantity shown on the indicator returns to the same quantity as it was before the indicator was removed.

S 414-017
(11) Close the fueling station door, 521QB (AMM 06-44-00/201).

S 864-026
(12) Remove electrical power if it is not necessary (AMM 24-22-00/201).

BOEING PROPRIETARY - Copyright (C) - Unpublished Work - See title page for details.

FQIS LOAD SELECT CONTROL - REMOVAL/INSTALLATION

1. General
   A. A load select control is installed in the fueling control panel, P28.
   B. This procedure contains two tasks. The first task removes the load select control. The second task installs the load select control.

TASK 28-41-07-004-001

2. Remove the Load Select Control (Fig. 401)
   A. References
      (1) AMM 06-44-00/201, Wing Access Doors and Panels
      (2) AMM 20-41-01/201, Electrostatic Discharge Sensitive Devices
   B. Access
      (1) Location Zone
          521 Leading Edge to Front Spar (Left)

      (2) Access Panel
          521QB Fueling Station Door (Left)

   C. Procedure

S 024-042

WARNING: WHEN YOU REMOVE AN ELECTROSTATIC DISCHARGE SENSITIVE (ESDS) UNIT, MAKE SURE YOU PUT COVERS ON THE ELECTRICAL CONNECTORS. USE ELECTROSTATIC DISCHARGE (ESD) SAFE DUST CAPS. IF THE CONECTORS DO NOT HAVE COVERS ON THEM, INJURY TO PERSONS AND DAMAGE TO THE CONNECTOR CAN OCCUR.

CAUTION: YOU MUST CAREFULLY DO THE STEPS IN THE TASK BELOW TO REMOVE THE FGIS LOAD SELECT CONTROL. A FAILURE TO DO THE STEPS CORRECTLY CAN CAUSE DAMAGE TO THE EQUIPMENT.

(1) Do the "Removal of ESDS Metal Encased Units" task to remove the FQIS load select control (AMM 20-41-01/201).

S 864-044

(2) Open this circuit breaker on the main power distribution panel, P6, and attach a DO-NOT-CLOSE tag:
    (a) 6E4, FUELING QTY

S 864-003

(3) Open these circuit breakers on the overhead circuit breaker panel, P11, and attach DO-NOT-CLOSE tags:
    (a) 11C34, FUEL QTY 1
    (b) 11M19, FUEL QTY 2

BOEING PROPRIETARY - Copyright (C) - Unpublished Work - See title page for details.

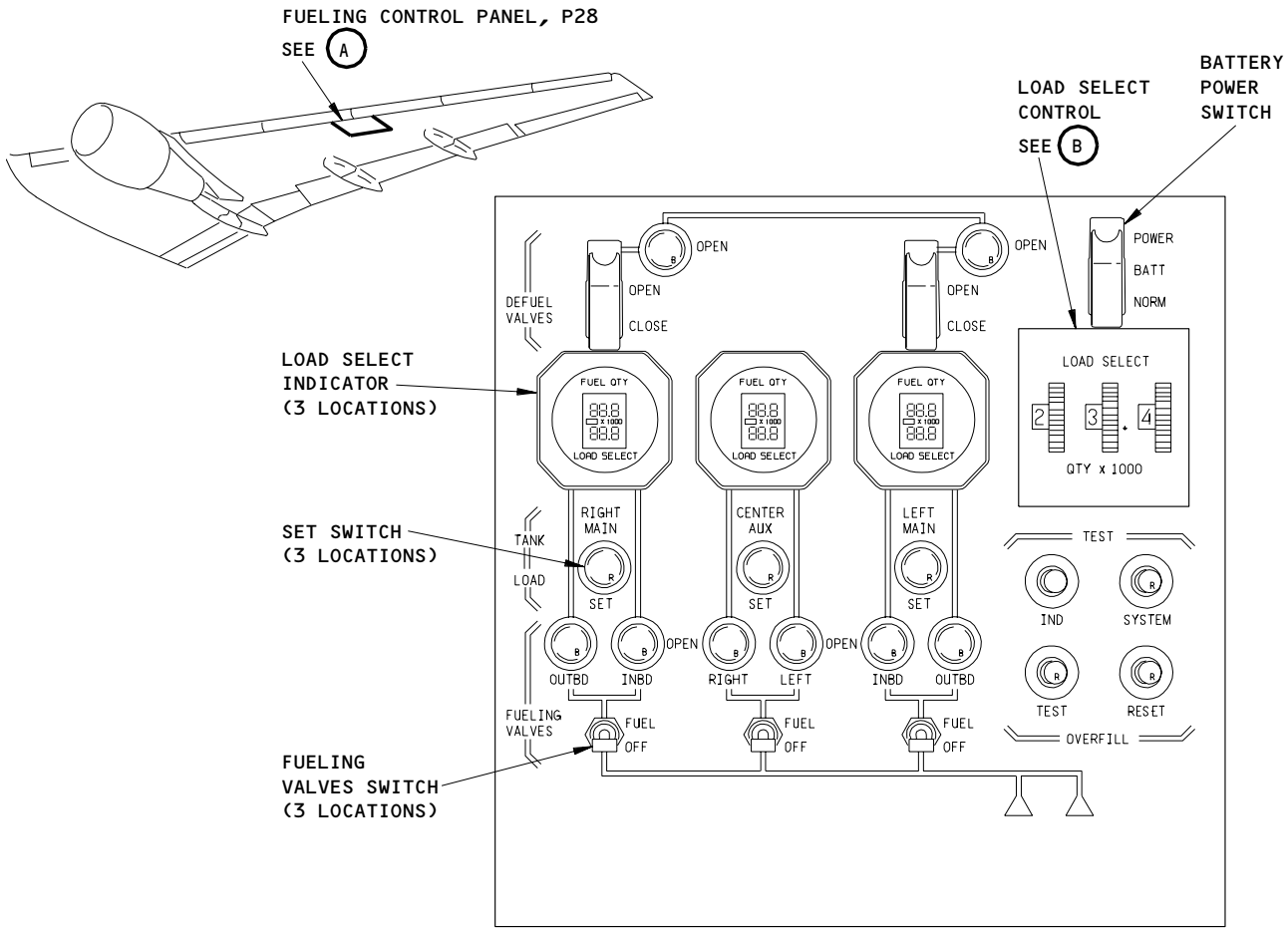

FUELING CONTROL PANEL, P28

A

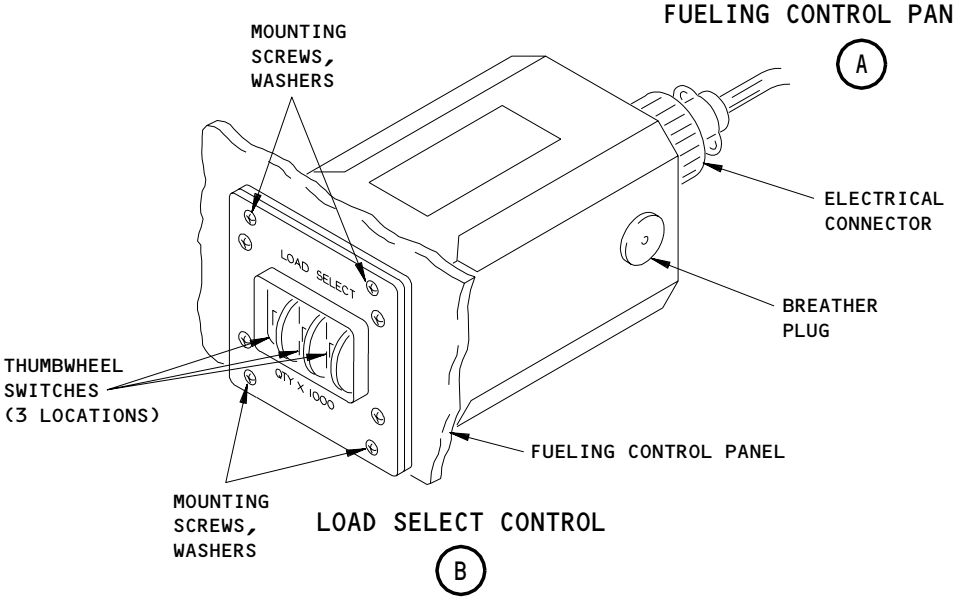

LOAD SELECT CONTROL

B

Load Select Control Installation
Figure 401

BOEING PROPRIETARY - Copyright (C) - Unpublished Work - See title page for details.

S 864-004
(4) Open this circuit breaker on the APU external power panel, P34, and attach a DO-NOT-CLOSE tag:
(a) 34L2, FUEL QTY REFUEL

S 014-005
(5) Open the fueling station door, 521QB (AMM 06-44-00/201).

S 034-009
(6) Remove the mounting screws and washers from the load select control (View B).

S 024-010
(7) Remove the load select control from the fueling control panel, P28.

S 034-013
(8) Disconnect the electrical connector from the load select control.

TASK 28-41-07-404-014
3. Install the Load Select Control (Fig. 401)
A. References
(1) AMM 06-44-00/201, Wing Access Doors and Panels
(2) AMM 20-41-01/201, Electrostatic Discharge Sensitive Devices
B. Access
(1) Location Zone
521 Leading Edge to Front Spar (Left)

(2) Access Panel
521QB Fueling Station Door (Left)

C. Procedure

BOEING PROPRIETARY - Copyright (C) - Unpublished Work - See title page for details.

S 424-043

WARNING: WHEN YOU INSTALL AN ELECTROSTATIC DISCHARGE SENSITIVE (ESDS) UNIT, MAKE SURE THE COMPONENT AND THE MOUNT RACK TOUCH EACH OTHER. THEN REMOVE THE ELECTROSTATIC DISCHARGE (ESD) DUST CAPS. THIS LETS THE UNIT RELEASE ELECTROSTATIC DISCHARGE. THIS WILL PREVENT INJURY TO PERSONS AND DAMAGE TO THE UNIT ELECTRICAL CONNECTORS.

CAUTION: YOU MUST CAREFULLY DO THE STEPS IN THE TASK BELOW TO INSTALL THE FQIS LOAD SELECT CONTROL. A FAILURE TO DO THE STEPS CORRECTLY CAN CAUSE DAMAGE TO THE EQUIPMENT.

(1) Do the "Installation of ESDS Metal Encased Units" task to install the FQIS load select control (AMM 20-41-01/201).

S 424-045
(2) Connect the electrical connector to the load select control (View B).

S 424-016
(3) Put the load select control in the fueling control panel.

S 434-024
(4) Install the mounting screws and washers in the load select control.

S 864-017
(5) Remove the DO-NOT-CLOSE tag and close this circuit breaker on the P6 panel:
(a) 6E4, FUELING QTY

S 864-018
(6) Remove the DO-NOT-CLOSE tags and close these circuit breakers on the P11 panel:
(a) 11C34, FUEL QTY 1
(b) 11M19, FUEL QTY 2

S 864-019
(7) Remove the DO-NOT-CLOSE tag and close this circuit breaker on the P34 panel:
(a) 34L2, FUEL QTY REFUEL

S 734-020
(8) Do a test of the load select control (View A).
(a) Put the BATT POWER switch on the fueling control panel, P28, to the BATT position.

BOEING PROPRIETARY - Copyright (C) - Unpublished Work - See title page for details.

(b) Make sure the fueling panel light comes on.
(c) Wait for 2 minutes.
(d) Make sure all FUELING VALVES switches on the fueling control panel, P28, are in the OFF position.
(e) Turn the thumbwheel switches on the load select control until the quantity shown is 00.0.
(f) Push the RIGHT MAIN SET switch.
(g) Make sure 0.0 shows on the bottom display of the RIGHT MAIN LOAD SELECT indicator.
(h) Put the BATT POWER switch on the fueling control panel, P28, to the NORM position.

S 414-021
(9) Close the fueling station door, 521QB (AMM 06-44-00/201).

BOEING PROPRIETARY - Copyright (C) - Unpublished Work - See title page for details.

FQIS PROCESSOR UNIT - REMOVAL/INSTALLATION

1. General
   A. The FQIS processor collects signals from all FQIS system components, calculates the fuel quantity in each fuel tank and transmits this information to the fuel quantity indicator. The FQIS processor is installed on the E2-4 rack in the main equipment center.
   B. This procedure contains two tasks. The first task removes the FQIS processor. The second task installs the FQIS processor.

TASK 28-41-08-004-001

2. Remove the FQIS Processor (Fig. 401)
   A. Equipment
      (1) E/E Access Hatch Safety Barrier - A53002-5
   B. References
      (1) AMM 06-41-00/201, Fuselage Access Doors and Panels
      (2) AMM 20-10-01/401, E/E Rack Mounted Components
      (3) AMM 20-41-01/201, Electrostatic Discharge Sensitive Devices
   C. Access
      (1) Location Zones
          119 Main Equipment Center (Left and Right)

      (2) Access Panel
          119AL Electronics Access Door

   D. Procedure

      S 864-002
      (1) Open this circuit breaker on the main power distribution panel, P6, and attach a DO-NOT-CLOSE tag:
          (a) 6E4, FUELING QTY

      S 864-003
      (2) Open these circuit breakers on the overhead circuit breaker panel, P11, and attach DO-NOT-CLOSE tags:
          (a) 11C34, FUEL QTY 1
          (b) 11M19, FUEL QTY 2

      S 864-004
      (3) Open this circuit breaker on the APU external power panel, P34, and attach a DO-NOT-CLOSE tag:
          (a) 34L2, FUEL QTY REFUEL

BOEING PROPRIETARY - Copyright (C) - Unpublished Work - See title page for details.

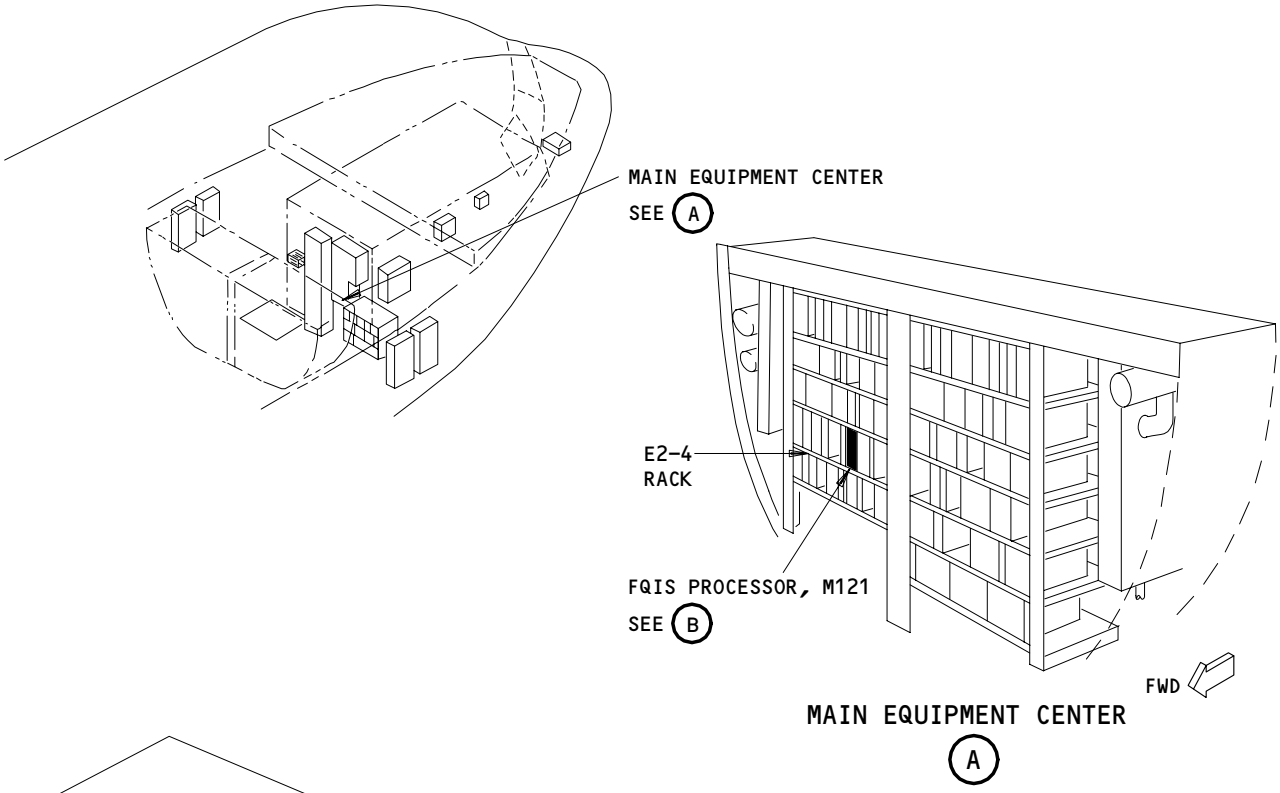

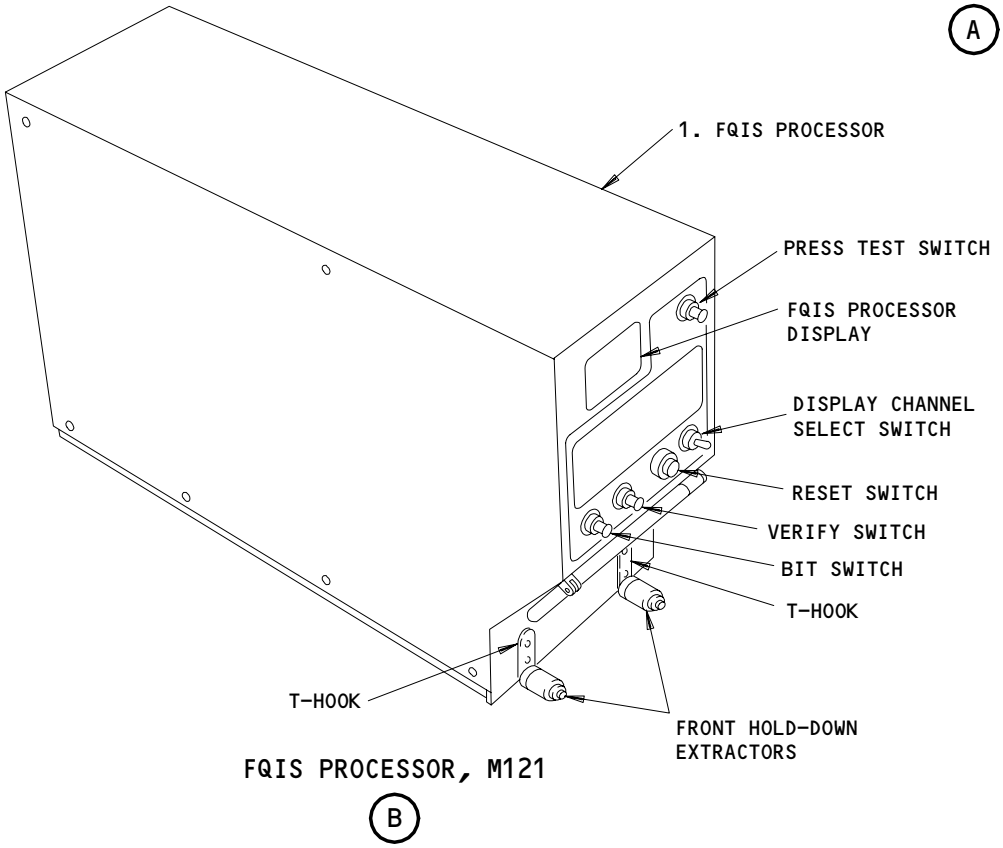

FQIS Processor Installation
Figure 401

BOEING PROPRIETARY - Copyright (C) - Unpublished Work - See title page for details.

S 014-005

WARNING: MAKE SURE THE ELECTRONICS ACCESS DOOR, 119AL, IS IN THE FULL OPEN POSITION. IF THE ELECTRONICS ACCESS DOOR IS NOT IN THE FULL OPEN POSITION, IT CAN ACCIDENTALLY MOVE AND CAUSE INJURY TO PERSONS.

(4) Push the electronics access door, 119AL, to the full open position to engage the hold-open detent (AMM 06-41-00/201).

S 014-006

(5) Go into the main equipment center.

S 494-007

(6) Install the E/E Access Hatch Safety Barrier across the opening of the electronics access door if you stay in the main equipment center a long time.

S 914-010

CAUTION: DO NOT TOUCH THE FQIS PROCESSOR BEFORE YOU DO THE PROCEDURE FOR DEVICES THAT ARE SENSITIVE TO ELECTROSTATIC DISCHARGE. ELECTROSTATIC DISCHARGE CAN CAUSE DAMAGE TO THE FQIS PROCESSOR.

(7) Do the procedure for devices that are sensitive to electrostatic discharge (AMM 20-41-01/201).

S 024-008

CAUTION: DO NOT REMOVE THE FQIS PROCESSOR UNLESS A HARD FAULT CODE SHOWS THAT IT IS FAULTY. FREQUENT REMOVALS AND INSTALLATIONS OF THE FQIS PROCESSOR CAN ACCIDENTALLY DAMAGE THE CONNECTOR PINS WHICH WILL CAUSE NUISANCE FAULT CODES AND NUISANCE STATUS CODES.

(8) Remove the FQIS processor (1) from the E2-4 rack in the main equipment center (AMM 20-10-01/401).

TASK 28-41-08-404-009

3. Install the FQIS Processor (Fig. 401)

A. Equipment

(1) E/E Access Hatch Safety Barrier - A53005-5

BOEING PROPRIETARY - Copyright (C) - Unpublished Work - See title page for details.

B. Parts

AMM		NOMENCLATURE	AIPC		
FIG	ITEM		SUBJECT	FIG	ITEM
401	1	FQIS Processor	28-41-08	01	5

C. References
(1) AMM 06-41-00/201, Fuselage Access Doors and Panels
(2) AMM 20-10-01/401, E/E Rack Mounted Components
(3) AMM 20-41-01/201, Electrostatic Discharge Sensitive Devices
(4) AMM 24-22-00/201, Electrical Power Control
(5) AMM 28-41-00/501, Fuel Quantity Indicating System (FQIS)

D. Access
(1) Location Zones
119 Main Equipment Center (Left and Right)

(2) Access Panel
119AL Electronics Access Door

E. Procedure

S 214-012
(1) Make sure the pins in the E2-4 rack connector are not damaged.

S 914-011

CAUTION: DO NOT TOUCH THE FQIS PROCESSOR BEFORE YOU DO THE PROCEDURE FOR DEVICES THAT ARE SENSITIVE TO ELECTROSTATIC DISCHARGE. ELECTROSTATIC DISCHARGE CAN CAUSE DAMAGE TO THE FQIS PROCESSOR.

(2) Do the procedure for devices that are sensitive to electrostatic discharge (AMM 20-41-01/201).

BOEING PROPRIETARY - Copyright (C) - Unpublished Work - See title page for details.

S 424-013

CAUTION: DO NOT DAMAGE THE CONNECTOR PINS WHEN YOU INSTALL THE FQIS PROCESSOR. DAMAGE TO THE CONNECTOR PINS CAN CAUSE NUISANCE FAULT CODES AND NUISANCE STATUS CODES.

(3) Install the FQIS processor (1) in E2-4 rack in the main equipment center (AMM 20-10-01/401).

S 864-014

(4) Remove the DO-NOT-CLOSE tag and close this circuit breaker on the P6 panel:
(a) 6E4, FUELING QTY

S 864-015

(5) Remove the DO-NOT-CLOSE tags and close these circuit breakers on the P11 panel:
(a) 11C34, FUEL QTY 1
(b) 11M19, FUEL QTY 2

S 864-016

(6) Remove the DO-NOT-CLOSE tag and close this circuit breaker on the P34 panel:
(a) 34L2, FUEL QTY REFUEL

S 864-017

(7) Supply electrical power (AMM 24-22-00/201).

S 744-018

(8) Do this task: Operational Test - Fuel Quantity Indicating System (AMM 28-41-00/501).

S 094-019

(9) Remove the E/E Access Hatch Safety Barrier if installed.

S 414-020

(10) Go out of the main equipment center.

BOEING PROPRIETARY - Copyright (C) - Unpublished Work - See title page for details.

S 414-021
(11) Close the electronics access door, 119AL (AMM 06-41-00/201).

S 864-022
(12) Remove electrical power, if it is not necessary (AMM 24-22-00/201).

BOEING PROPRIETARY - Copyright (C) - Unpublished Work - See title page for details.

FQIS TANK WIRING HARNESS - REMOVAL/INSTALLATION

1. General
   A. The tank wiring harness is part of the fuel quantitiy indicating system (FQIS). There is a tank wiring harness in the left main, right main, left auxiliary and right auxiliary fuel tank. The procedure to remove and install each tank wiring harness is the same.
   B. Repair and overhaul of the FQIS tank wiring harness must be per SWPM 20-14-12.

      NOTE: CDCCL - Refer to the task: Airworthiness Limitation Precautions (AMM 28-00-00/201), for important information on Critical Design Configuration Control Limitations (CDCCLs).

      NOTE: This is applicable to Airworthiness Limitation 28-AWL-13.

   C. This procedure contains two tasks. The first task removes the tank wiring harness. The second task installs the tank wiring harness.

   TASK 28-41-09-004-001-001
2. Remove the Tank Wiring Harness (Fig. 401)
   A. References
      (1) AMM 06-44-00/201, Wing Access Doors and Panels
      (2) AMM 28-11-00/201, Fuel Tanks (Purging and Entry)
      (3) AMM 28-11-01/401, Main Tank Access Doors
      (4) AMM 28-11-02/401, Auxiliary Tank Access Doors
      (5) AMM 28-26-00/201, Defueling
      (6) AMM 32-00-15/201, Landing Gear Door Locks
      (7) AMM 32-00-20/201, Landing Gear Downlocks
   B. Access
      (1) Location Zones
          133 Wing Center Section (Left)
          134 Wing Center Section (Right)
          531 Center Auxiliary Tank (Left)
          532 Main Tank - Inboard of Rib No. 10 (Left)
          541 Main Tank - Outboard of Rib No. 10 (Left)
          552 MLG Support Beam to Trailing Edge (Left)
          631 Center Auxiliary Tank (Right)
          632 Main Tank - Inboard of Rib No. 10 (Right)
          641 Main Tank - Outboard of Rib No. 10 (Right)
          652 MLG Support Beam to Trailing Edge (Right)

      (2) Access Panels
          552HB Access Panel (Left)
          652HB Access Panel (Right)

   C. Procedure

      S 654-002-001
      (1) Defuel the applicable fuel tank (AMM 28-26-00/201).

BOEING PROPRIETARY - Copyright (C) - Unpublished Work - See title page for details.

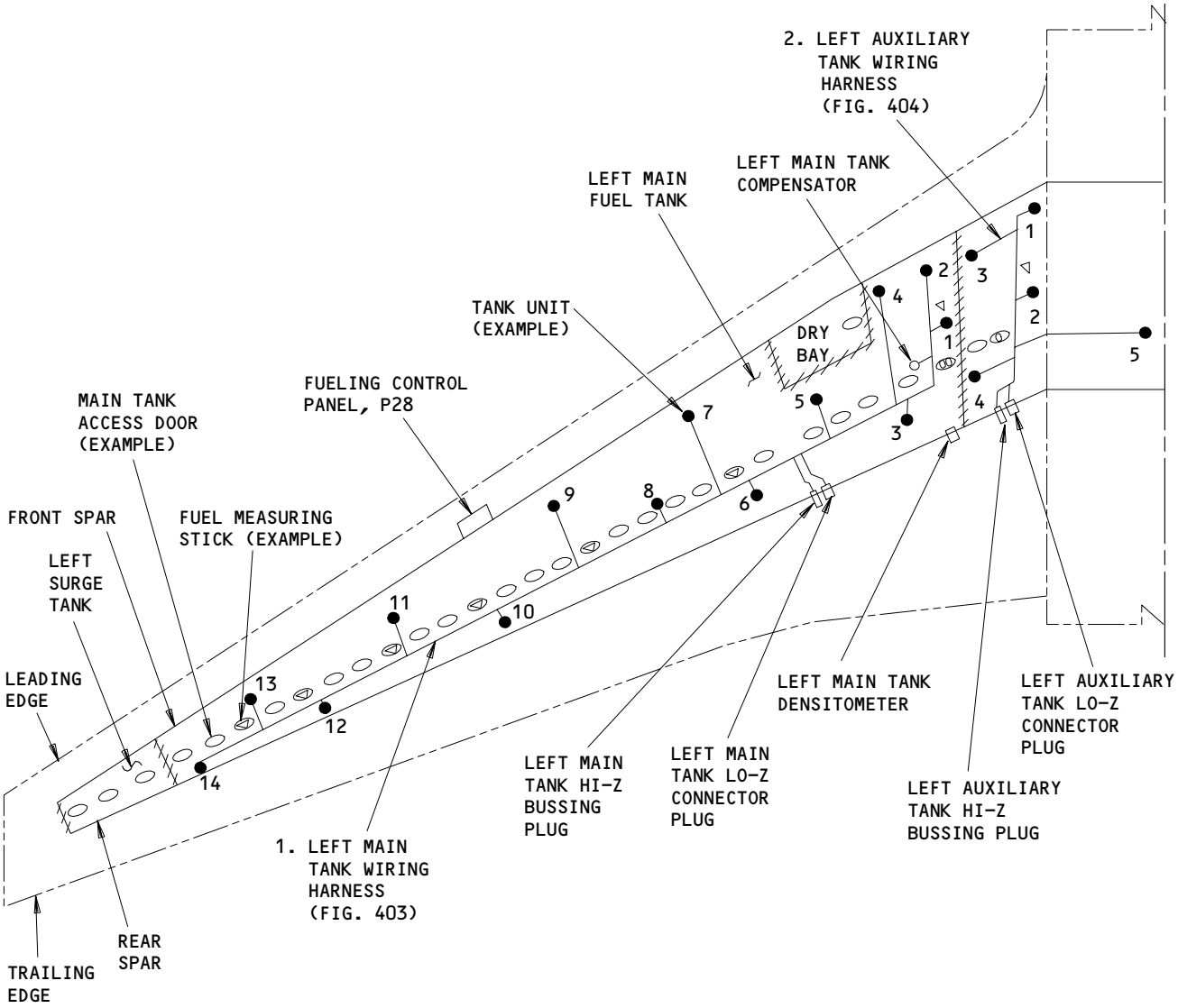

LEFT WING

Tank Wiring Harness
Figure 401 (Sheet 1)

BOEING PROPRIETARY - Copyright (C) - Unpublished Work - See title page for details.

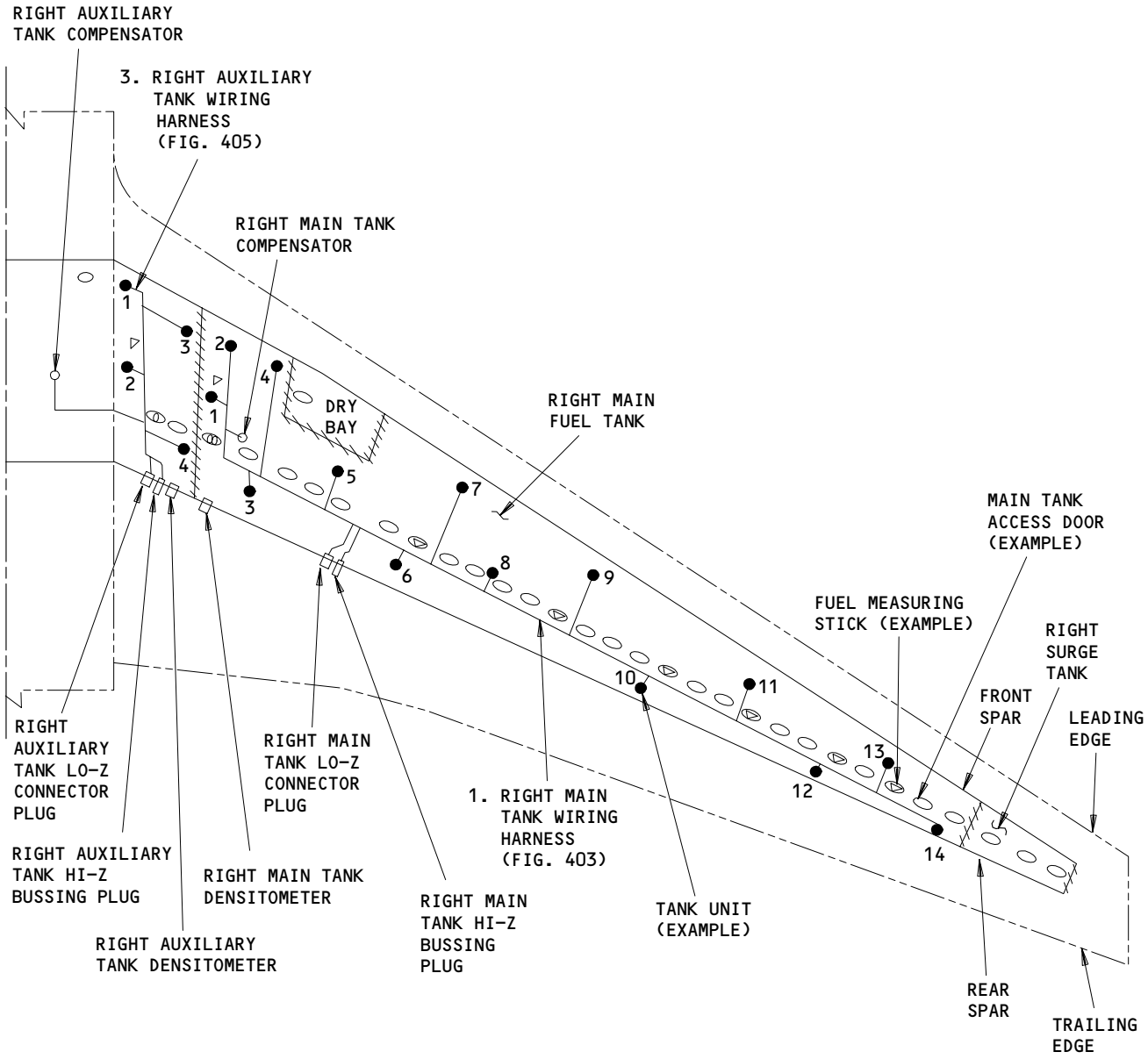

RIGHT WING

Tank Wiring Harness
Figure 401 (Sheet 2)

A33665

BOEING PROPRIETARY - Copyright (C) - Unpublished Work - See title page for details.

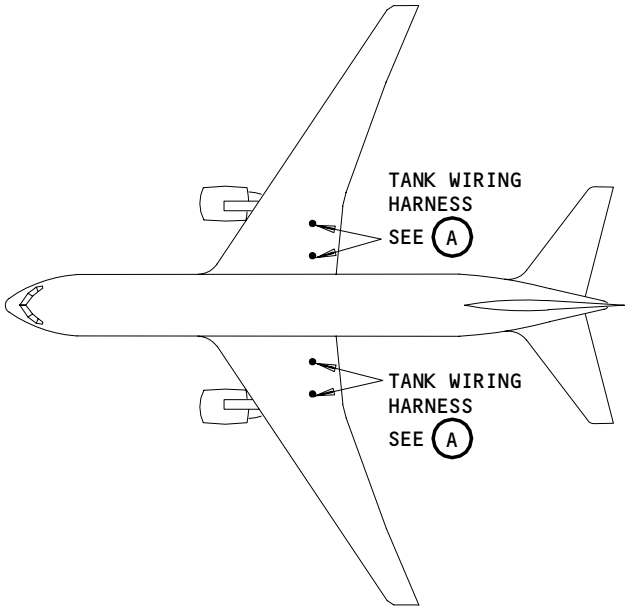

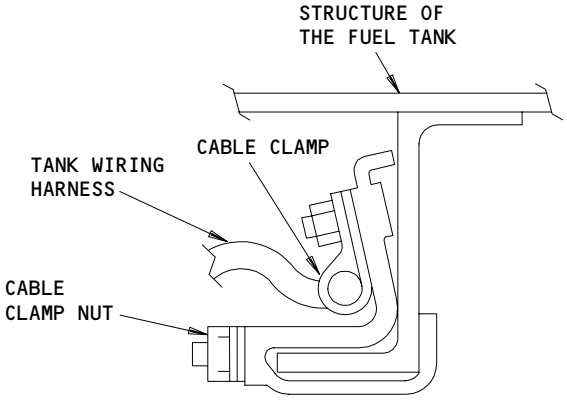

CABLE CLAMP (EXAMPLE)
(FOUND IN THE FUEL TANK,
ATTACHES TO THE TANK
WIRING HARNESS)

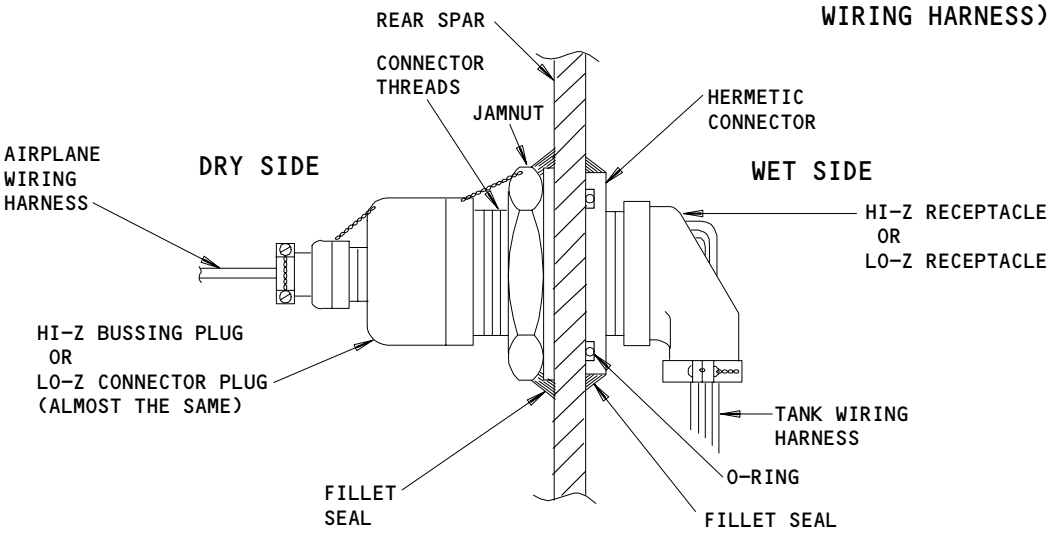

TANK WIRING HARNESS

A

HI-Z Bussing Plug/LO-Z Connector Plug
Figure 402

BOEING PROPRIETARY - Copyright (C) - Unpublished Work - See title page for details.

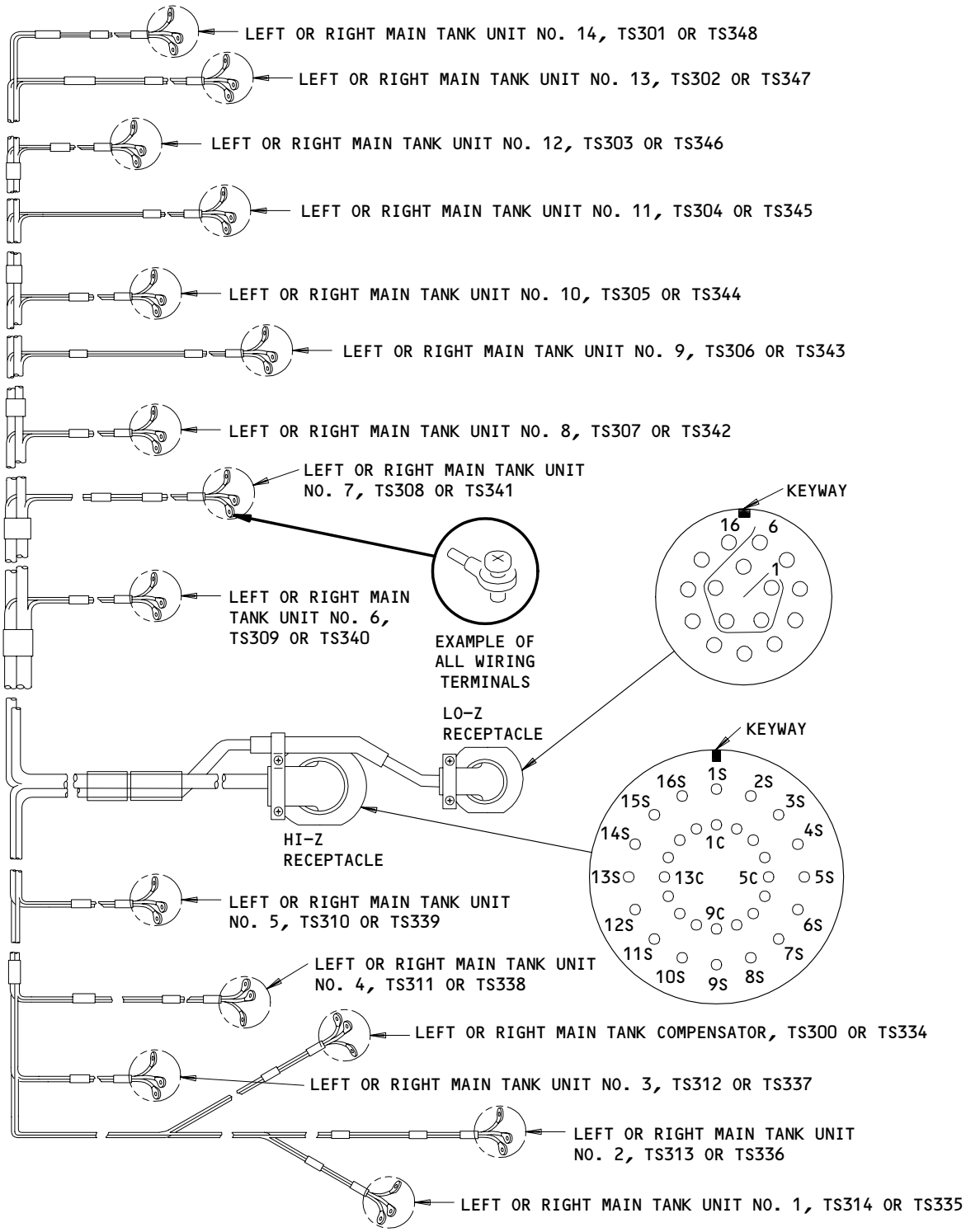

Left or Right Main Tank Wiring Harness, M726 or M727, Installation
Figure 403

BOEING PROPRIETARY - Copyright (C) - Unpublished Work - See title page for details.

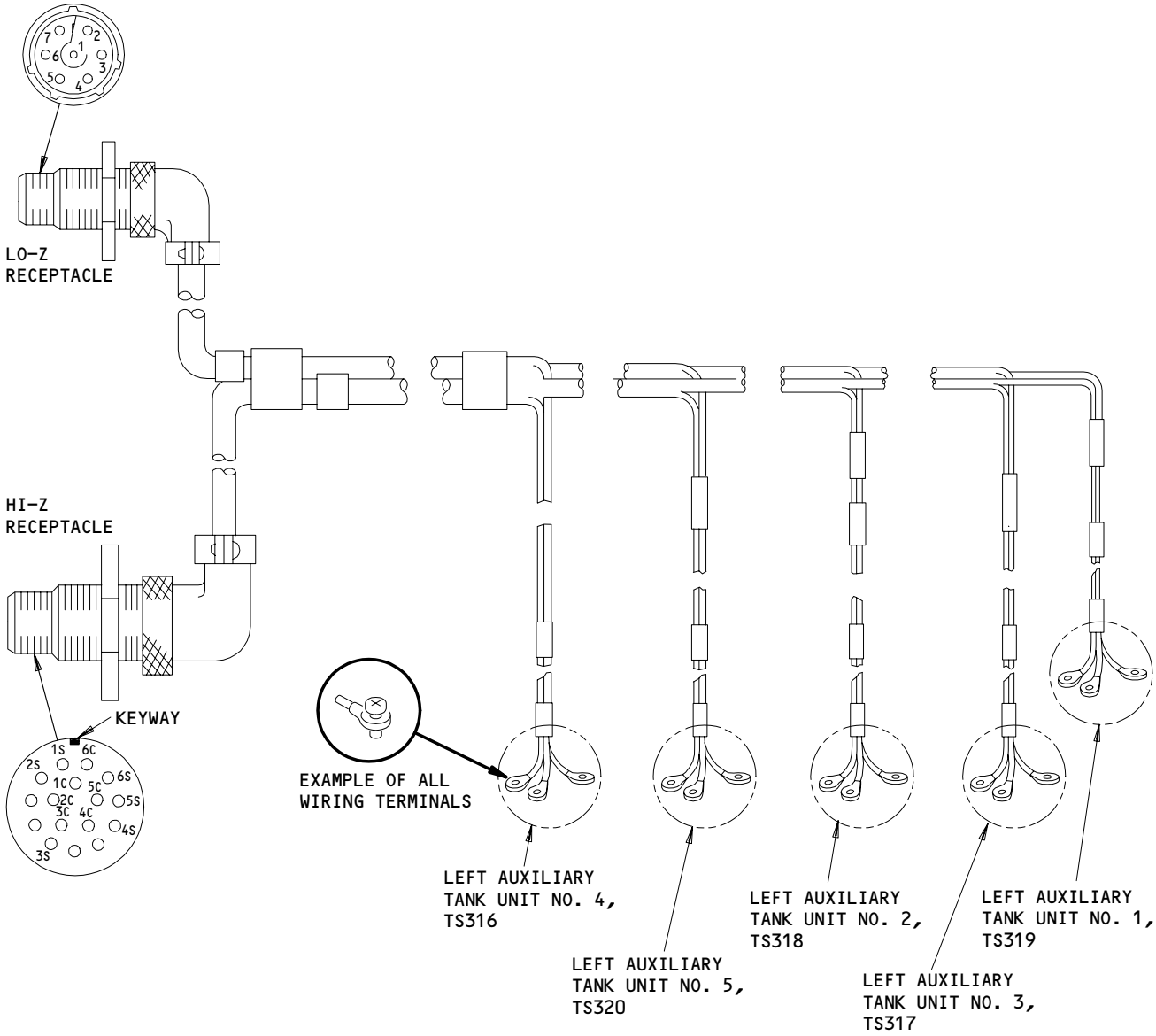

Left Auxiliary Tank Wiring Harness, M728, Installation
Figure 404

BOEING PROPRIETARY - Copyright (C) - Unpublished Work - See title page for details.

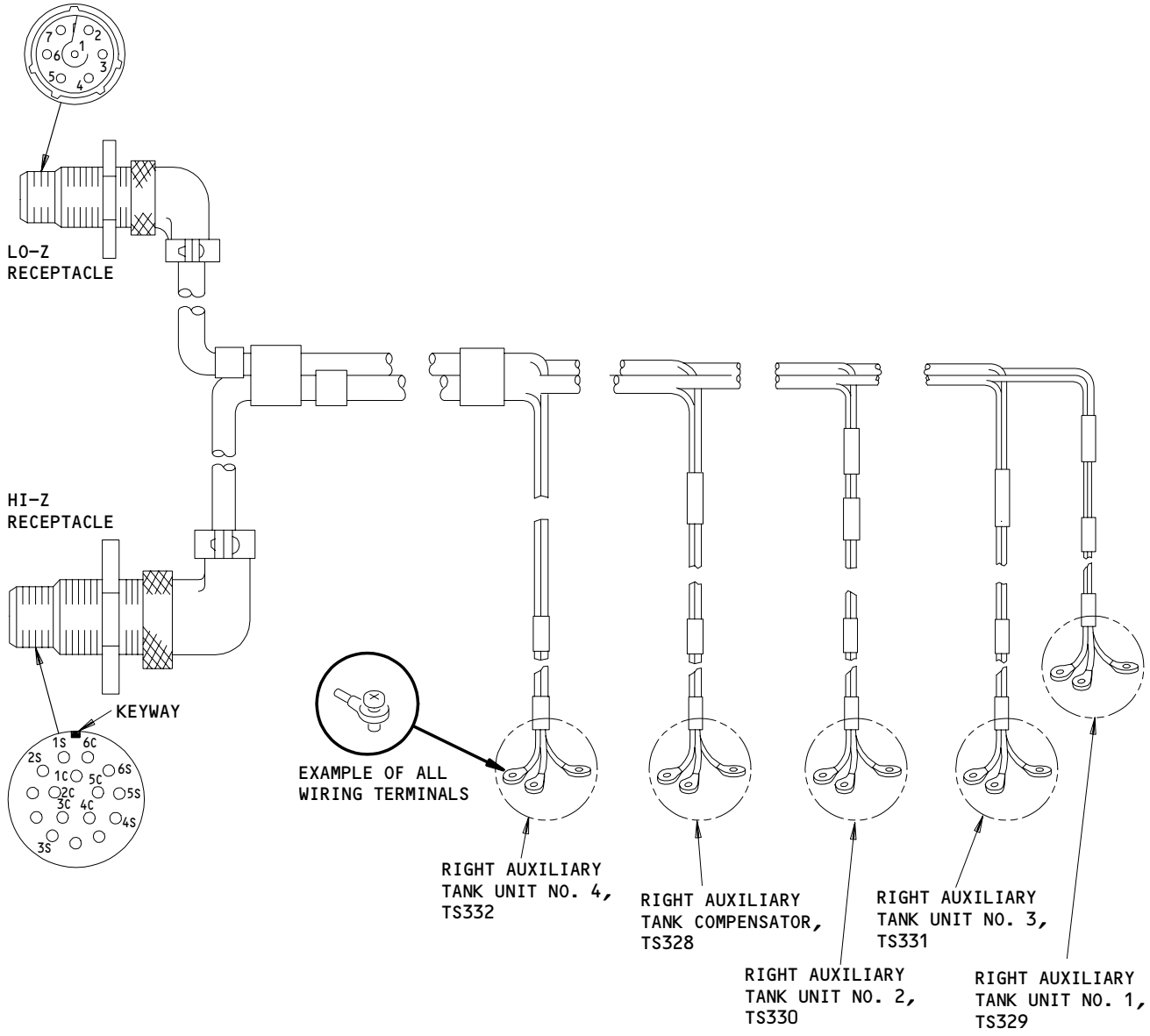

Right Auxiliary Tank Wiring Harness, M729, Installation
Figure 405

BOEING PROPRIETARY - Copyright (C) - Unpublished Work - See title page for details.

S 654-003-001
(2) Drain and purge the applicable fuel tank (AMM 28-11-00/201).

S 014-004-001
(3) For the tank wiring harness in the left or right main fuel tank, remove the applicable main tank access doors (AMM 28-11-01/401).

S 014-005-001
(4) For the tank wiring harnesses in the auxiliary fuel tank, remove the applicable auxiliary tank access doors (AMM 28-11-02/401).

S 864-006-001
(5) Open this circuit breaker on the main power distribution panel, P6, and attach a DO-NOT-CLOSE tag:
(a) 6E4, FUELING QTY

S 864-007-001
(6) Open these circuit breakers on the overhead circuit breaker panel, P11, and attach DO-NOT-CLOSE tags:
(a) 11C34, FUEL QTY 1
(b) 11M19, FUEL QTY 2

S 864-008-001
(7) Open this circuit breaker on the APU external power panel, P34, and attach a DO-NOT-CLOSE tag:
(a) 34L2, FUEL QTY REFUEL

S 944-009-001

WARNING: OBEY THE FUEL TANK ENTRY PRECAUTIONS (AMM 28-11-00/201). FAILURE TO OBEY THE FUEL TANK ENTRY PRECAUTIONS COULD CAUSE INJURY TO PERSONS OR DAMAGE TO EQUIPMENT.

(8) Obey the fuel tank entry precautions (AMM 28-11-00/201).

S 014-010-001
(9) Go into the fuel tank.

S 034-011-001
(10) Disconnect the wiring terminals of the tank wiring harness at the terminal block of each tank unit (Fig. 401).

S 034-012-001
(11) Loosen the wire clamp at the terminal block of each tank unit.

S 034-013-001
(12) Open the strain relief clamp at each tank unit.

BOEING PROPRIETARY - Copyright (C) - Unpublished Work - See title page for details.

S 034-014-001
(13) Move the wiring away from the tank units.

S 034-015-001
(14) Disconnect the wiring terminals at the terminal block of the compensator.

S 034-016-001
(15) Loosen the wire clamp at the terminal block of the compensator.

S 034-017-001
(16) Open the strain relief clamp at the compensator.

S 034-018-001
(17) Move the wiring away from the compensator.

S 034-019-001
(18) Remove all the cable clamps that attach the tank wiring harness to the structure in the fuel tank (Fig. 402).

S 014-020-001
(19) To get access to the HI-Z bussing plugs and LO-Z connector plugs in the auxiliary fuel tank, do the steps that follow:
(a) Make sure the downlocks are installed on the nose and main landing gear (Ref 32-00-20).

WARNING: USE THE PROCEDURE IN AMM 32-00-15/201 TO INSTALL THE DOOR LOCKS. THE DOORS OPEN AND CLOSE QUICKLY AND CAN CAUSE INJURY TO PERSONS OR DAMAGE TO EQUIPMENT.

(b) Open the doors for the landing gear and install the door locks (AMM 32-00-15/201).

S 014-021-001
(20) To get access to the HI-Z bussing plug and the LO-Z connector plug in the left main fuel tank, remove the access panel, 552HB (AMM 06-44-00/201).

S 014-022-001
(21) To get access to the HI-Z bussing plug and the LO-Z connector plug in the right main fuel tank, remove the access panel, 652HB (AMM 06-44-00/201).

BOEING PROPRIETARY - Copyright (C) - Unpublished Work - See title page for details.

S 034-023-001
(22) Disconnect the HI-Z bussing plug and the LO-Z connector plug on the aft face of the rear spar (View A, Fig. 402).

S 034-024-001
(23) Remove the jamnut that holds each receptacle in position on the rear spar.

S 024-025-001
(24) Remove the receptacles from the rear spar.

S 034-026-001
(25) Discard the O-rings.

S 024-027-001
(26) Remove the tank wiring harness (1, 2, 3) from the fuel tank (Fig. 401).

TASK 28-41-09-404-028-001

3. Install the Tank Wiring Harness

A. General

(1) Installation of the tank wiring harness must be per the following procedure.

NOTE: CDCCL - Refer to the task: Airworthiness Limitation Precautions (AMM 28-00-00/201), for important information on Critical Design Configuration Control Limitations (CDCCLs).

NOTE: This is applicable to Airworthiness Limitation 28-AWL-13.

B. Consumable Materials

(1) A00247 Chromate Type Sealant - BMS 5-95
(2) Sealing Compound - use one of the sealing compounds that follow:
(a) A00767 Sealant - BMS 5-45
(b) A00908 Pro-Seal 860, B 1/6

C. References

(1) AMM 06-44-00/201, Wing Access Doors and Panels
(2) AMM 12-11-01/301, Fuel Tank Pressure Fueling
(3) AMM 20-10-23/401, Lockwire
(4) AMM 24-22-00/201, Electrical Power Control
(5) AMM 28-11-00/201, Fuel Tanks (Purging and Entry)
(6) AMM 28-11-01/401, Main Tank Access Doors

BOEING PROPRIETARY - Copyright (C) - Unpublished Work - See title page for details.

(7) AMM 28-11-02/401, Auxiliary Tank Access Doors
(8) AMM 28-41-00/501, Fuel Quantity Indicating System (FQIS)
(9) AMM 32-00-15/201, Landing Gear Door Locks
(10) AMM 51-31-01/201, Seals and Sealing
(11) SWPM 20-10-11, Installation of Electrical Wires and Harnesses
(12) SWPM 20-10-12, Wire Harness Supports
(13) SWPM 20-10-19, Wire Separation

D. Access

(1) Location Zones

133	Wing Center Section (Left)
134	Wing Center Section (Right)
531	Center Auxiliary Tank (Left)
532	Main Tank - Inboard of Rib No. 10 (Left)
541	Main Tank - Outboard of Rib No. 10 (Left)
552	MLG Support Beam to Trailing Edge (Left)
631	Center Auxiliary Tank (Right)
632	Main Tank - Inboard of Rib No. 10 (Right)
641	Main Tank - Outboard of Rib No. 10 (Right)
652	MLG Support Beam to Trailing Edge (Right)

(2) Access Panels

552HB	Access Panel (Left)
652HB	Access Panel (Right)

E. Procedure

S 944-029-001

WARNING: OBEY THE FUEL TANK ENTRY PRECAUTIONS. FAILURE TO OBEY THE FUEL TANK ENTRY PRECAUTIONS COULD CAUSE INJURY TO PERSONS OR DAMAGE TO EQUIPMENT.

(1) Obey the fuel tank entry precautions (AMM 28-11-00/201).

S 014-030-001

(2) Go into the fuel tank.

S 214-031-001

(3) Make sure the receptacle mating surfaces on the rear spar are clean (View A, Fig. 402).

NOTE: CDCCL - Refer to the task: Airworthiness Limitation Precautions (AMM 28-00-00/201), for important information on Critical Design Configuration Control Limitations (CDCCLs).

NOTE: This is applicable to Airworthiness Limitation 28-AWL-13.

BOEING PROPRIETARY - Copyright (C) - Unpublished Work - See title page for details.

S 434-032-001
(4) Install the new O-ring in the groove on the mating surface of each receptacle.

NOTE: CDCCL - Refer to the task: Airworthiness Limitation Precautions (AMM 28-00-00/201), for important information on Critical Design Configuration Control Limitations (CDCCLs).

NOTE: This is applicable to Airworthiness Limitation 28-AWL-13.

S 424-033-001
(5) Put the receptacles in the holes on the rear spar.

S 434-034-001
(6) Install the jamnut on each receptacle at the aft face of the rear spar.

S 434-035-001
(7) Tighten the jamnut to 180-240 inch-pounds (20-28 Nm).

NOTE: CDCCL - Refer to the task: Airworthiness Limitation Precautions (AMM 28-00-00/201), for important information on Critical Design Configuration Control Limitations (CDCCLs).

NOTE: This is applicable to Airworthiness Limitation 28-AWL-13.

S 394-036-001
(8) Use the sealing compound (BMS 5-45 or Pro-Seal 860) to apply a fillet seal around the hermetic connector or in the fuel tank (AMM 51-31-01/201).

NOTE: CDCCL - Refer to the task: Airworthiness Limitation Precautions (AMM 28-00-00/201), for important information on Critical Design Configuration Control Limitations (CDCCLs).

NOTE: This is applicable to Airworthiness Limitation 28-AWL-13.

S 034-037-001
(9) Connect the HI-Z bussing plug to the HI-Z receptacle.

S 034-038-001
(10) Connect the LO-Z connector plug to the LO-Z receptacle.

S 914-039-001
(11) Install lockwire, if applicable, between the HI-Z bussing plug and the jamnut (AMM 20-10-23/401).

BOEING PROPRIETARY - Copyright (C) - Unpublished Work - See title page for details.

S 914-040-001
(12) Install lockwire, if applicable, between the LO-Z connector plug and the jamnut (AMM 20-10-23/401).

S 394-041-001
(13) Apply fillet seals around the jamnuts with chromate type sealant (BMS 5-95) (AMM 51-31-01/201).

S 394-042-001

CAUTION: DO NOT APPLY SEALANT ON MORE THAN THE COLOR BAND OF THE CONNECTOR THREADS. IF YOU APPLY MORE SEALANT, INCORRECT ELECTRICAL CONTACT COULD OCCUR.

(14) Apply fillet seals around the HI-Z bussing plug and LO-Z connector plugs with chromate type sealant (BMS 5-95) (AMM 51-31-01/201).

S 424-043-001

CAUTION: BE CAREFUL WHEN YOU INSTALL THE TANK WIRING HARNESS THROUGH OPEN AREAS AT THE TOP OF THE RIBS. IF YOU ARE NOT CAREFUL, DAMAGE TO THE WIRES OF THE TANK WIRING HARNESS CAN OCCUR.

(15) Install the tank wiring harness (1, 2, 3) (Fig. 401) (SWPM 20-10-11, SWPM 20-10-12, SWPM 20-10-19).
(a) Adjust wire slack to maintain a clearance of 0.5 inch (12.7 mm) between wire and components or structure. If 0.5 inch (12.7 mm) clearance is not possible, you must maintain a minimum of 0.125 inch (3.2 mm) clearance.

NOTE: CDCCL - Refer to the task: Airworthiness Limitation Precautions (AMM 28-00-00/201), for important information on Critical Design Configuration Control Limitations (CDCCLs).

NOTE: This is applicable to Airworthiness Limitation 28-AWL-13.

S 424-044-001
(16) Install the cable clamps to attach the tank wiring harness to the structure in the fuel tank (Fig. 402).

S 434-045-001
(17) Connect the wiring terminals to the terminal block of each tank unit (Fig. 401).

NOTE: The wiring terminals have identification markers, and are different sizes to prevent errors in connections.

BOEING PROPRIETARY - Copyright (C) - Unpublished Work - See title page for details.

S 434-046-001
(18) Tighten the wire clamp at the terminal block of the tank units.

S 434-047-001
(19) Close the strain relief clamp at the tank units (SWPM 20-10-11, SWPM 20-10-12, SWPM 20-10-19).

NOTE: Adjust wire slack to maintain a clearance of 0.5 inch between wire and components or structure. If 0.5 inch clearance is not possible, you must maintain a minimum of 0.125 inch clearance.

S 434-048-001
(20) Connect the wiring terminals to the terminal block of the compensator.

S 434-049-001
(21) Tighten the wire clamp at the terminal block of the compensator.

S 434-050-001
(22) Close the strain relief clamp at the compensator (SWPM 20-10-11, SWPM 20-10-12, SWPM 20-10-19).

NOTE: Adjust wire slack to maintain a clearance of 0.5 inch between wire and components or structure. If 0.5 inch clearance is not possible, you must maintain a minimum of 0.125 inch clearance.

S 094-051-001

CAUTION: MAKE SURE YOU REMOVE ALL EQUIPMENT, MATERIALS AND UNWANTED PARTICLES FROM IN THE FUEL TANK. UNWANTED MATERIALS CAN BLOCK THE PUMPS AND PREVENT THE SCAVENGE OF FUEL.

(23) Remove the purging and ventilating equipment (AMM 28-11-00/201).

S 414-052-001
(24) For the tank wiring harness in the left or right main fuel tank, install the main tank access doors that are removed (AMM 28-11-01/401).

S 414-053-001
(25) For the tank wiring harnesses in the auxiliary fuel tank, install the auxiliary tank access doors that are removed (AMM 28-11-02/401).

BOEING PROPRIETARY - Copyright (C) - Unpublished Work - See title page for details.

S 864-054-001
(26) Remove the DO-NOT-CLOSE tag and close this circuit breaker on the P6 panel:
(a) 6E4, FUELING QTY

S 864-055-001
(27) Remove the DO-NOT-CLOSE tags and close these circuit breakers on the P11 panel:
(a) 11C34, FUEL QTY 1
(b) 11M19, FUEL QTY 2

S 864-056-001
(28) Remove the DO-NOT-CLOSE tag and close this circuit breaker on the P34 panel:
(a) 34L2, FUEL QTY REFUEL

S 864-057-001
(29) Supply electrical power (AMM 24-22-00/201).

S 654-058-001
(30) Refuel the applicable fuel tank, if no more work is necessary (AMM 12-11-01/301).

S 744-059-001
(31) Do the fuel quantity BITE procedure (AMM 28-41-00/501).

S 414-060-001

WARNING: USE THE PROCEDURE IN AMM 32-00-15/201 TO REMOVE THE DOOR LOCKS. THE DOORS OPEN AND CLOSE QUICKLY AND CAN CAUSE INJURY TO PERSONS OR DAMAGE TO EQUIPMENT.

(32) Remove the door locks from the landing gear doors and close the doors, if opened (AMM 32-00-15/201).

S 414-061-001
(33) If removed, install the left or right access panel, 552HB or 652HB (AMM 06-44-00/201).

S 864-062-001
(34) Remove electrical power if it is not necessary (AMM 24-22-00/201).

BOEING PROPRIETARY - Copyright (C) - Unpublished Work - See title page for details.

FQIS TANK WIRING HARNESS - REMOVAL/INSTALLATION

1. General
   A. The tank wiring harness is part of the fuel quantity indication system (FQIS).
   B. Repair and overhaul of the FQIS tank wiring harness must be per SWPM 20-14-12.

      NOTE: CDCCL - Refer to the task: Airworthiness Limitation Precautions (AMM 28-00-00/201), for important information on Critical Design Configuration Control Limitations (CDCCLs).

      NOTE: This is applicable to Airworthiness Limitation 28-AWL-13.

   C. There is a tank wiring harness in the left main, right main, left auxiliary and right auxiliary fuel tank. There are also three densitometer tank wiring harnesses, one in each main tank and one in the auxiliary tank. The procedure to remove and install each tank wiring harness is the same.
   D. This procedure contains two tasks. The first task removes the tank wiring harness. The second task installs the tank wiring harness.

   TASK 28-41-09-004-001-002
2. Remove the Tank Wiring Harness (Fig. 401)
   A. References
      (1) AMM 06-44-00/201, Wing Access Doors and Panels
      (2) AMM 28-11-00/201, Fuel Tanks (Purging and Entry)
      (3) AMM 28-11-01/401, Main Tank Access Doors
      (4) AMM 28-11-02/401, Auxiliary Tank Access Doors
      (5) AMM 28-26-00/201, Defueling
      (6) AMM 32-00-15/201, Landing Gear Door Locks
      (7) AMM 32-00-20/201, Landing Gear Downlocks
   B. Access
      (1) Location Zones

133	Wing Center Section (Left)
134	Wing Center Section (Right)
531	Center Auxiliary Tank (Left)
532	Main Tank - Inboard of Rib No. 10 (Left)
541	Main Tank - Outboard of Rib No. 10 (Left)
551	Lower Wing Structure (Left)
552	MLG Support Beam to Trailing Edge (Left)
631	Center Auxiliary Tank (Right)
632	Main Tank - Inboard of Rib No. 10 (Right)
641	Main Tank - Outboard of Rib No. 10 (Right)
651	Lower Wing Structure (Right)
652	MLG Support Beam to Trailing Edge (Right)

BOEING PROPRIETARY - Copyright (C) - Unpublished Work - See title page for details.

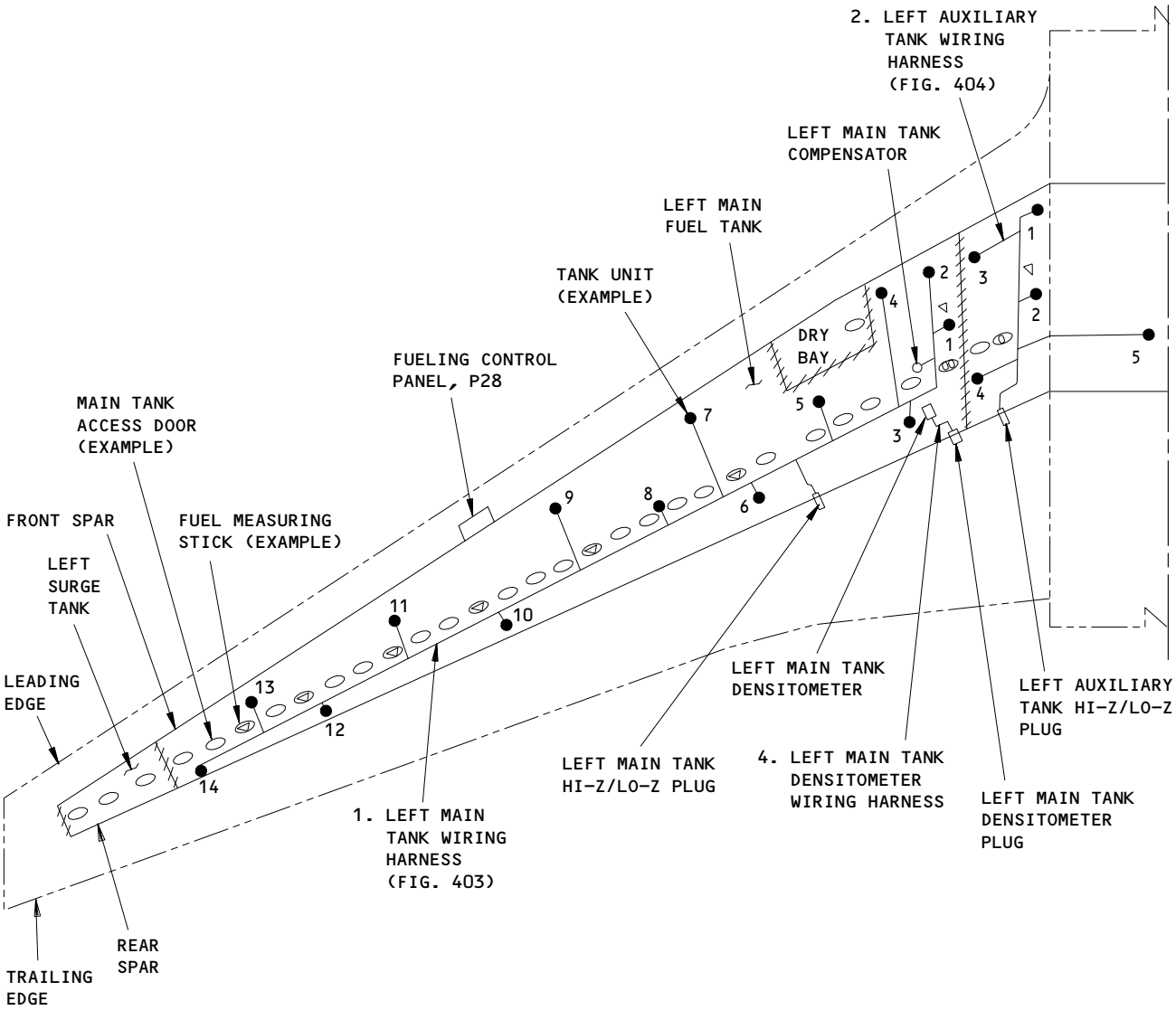

LEFT WING

Tank Wiring Harness
Figure 401 (Sheet 1)

BOEING PROPRIETARY - Copyright (C) - Unpublished Work - See title page for details.

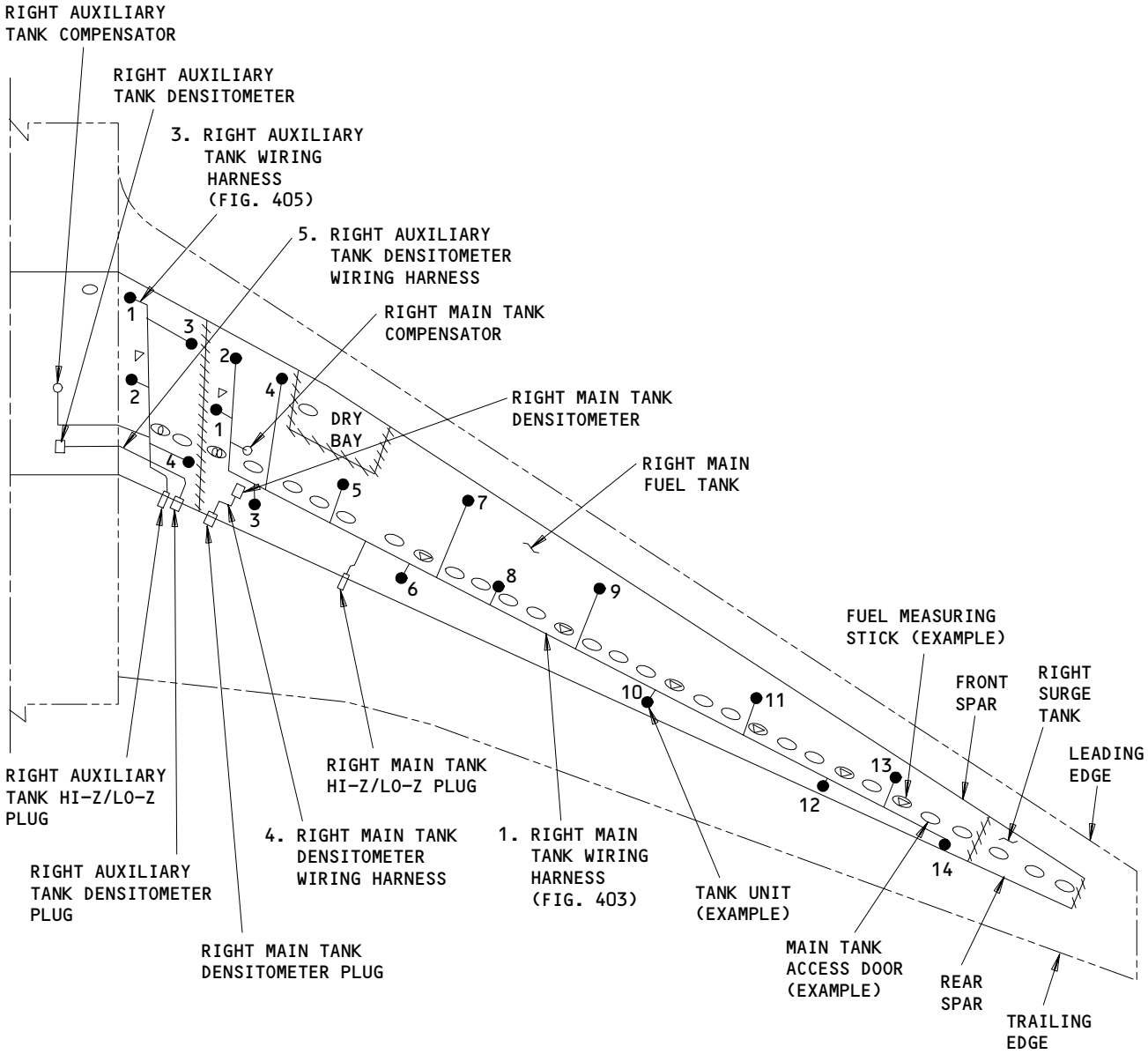

RIGHT WING

Tank Wiring Harness
Figure 401 (Sheet 2)

BOEING PROPRIETARY - Copyright (C) - Unpublished Work - See title page for details.

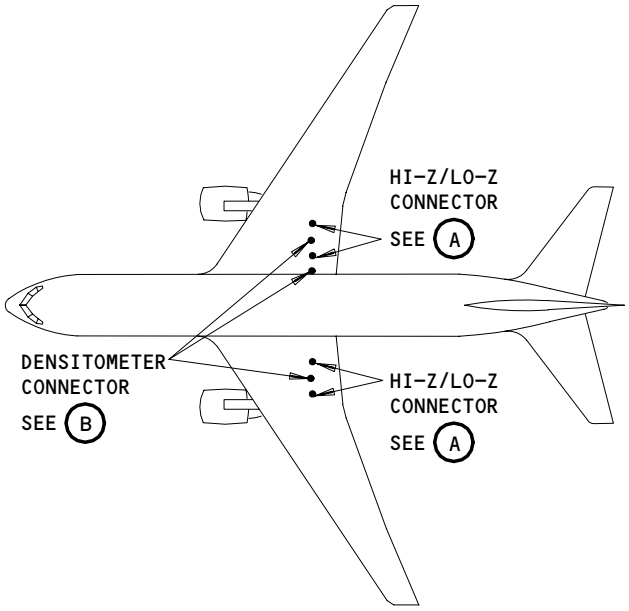

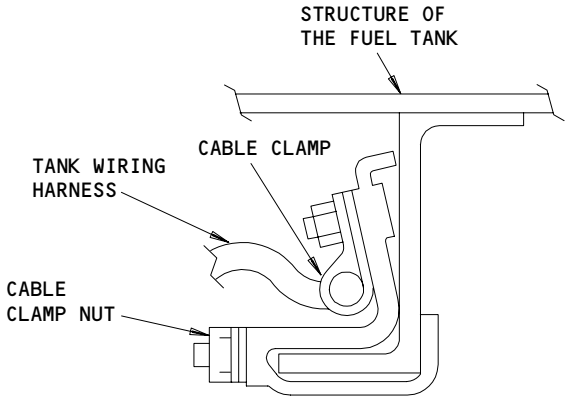

CABLE CLAMP (EXAMPLE)
(FOUND IN THE FUEL TANK,
ATTACHES TO THE TANK
WIRING HARNESS)

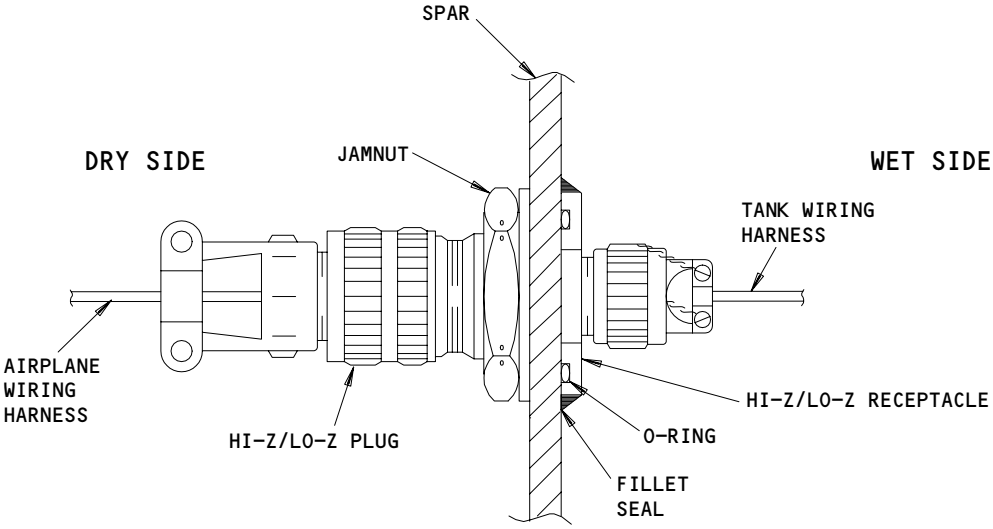

HI-Z/LO-Z CONNECTOR
(EXAMPLE)
A

Tank Wiring Harness Connectors
Figure 402 (Sheet 1)

BOEING PROPRIETARY - Copyright (C) - Unpublished Work - See title page for details.

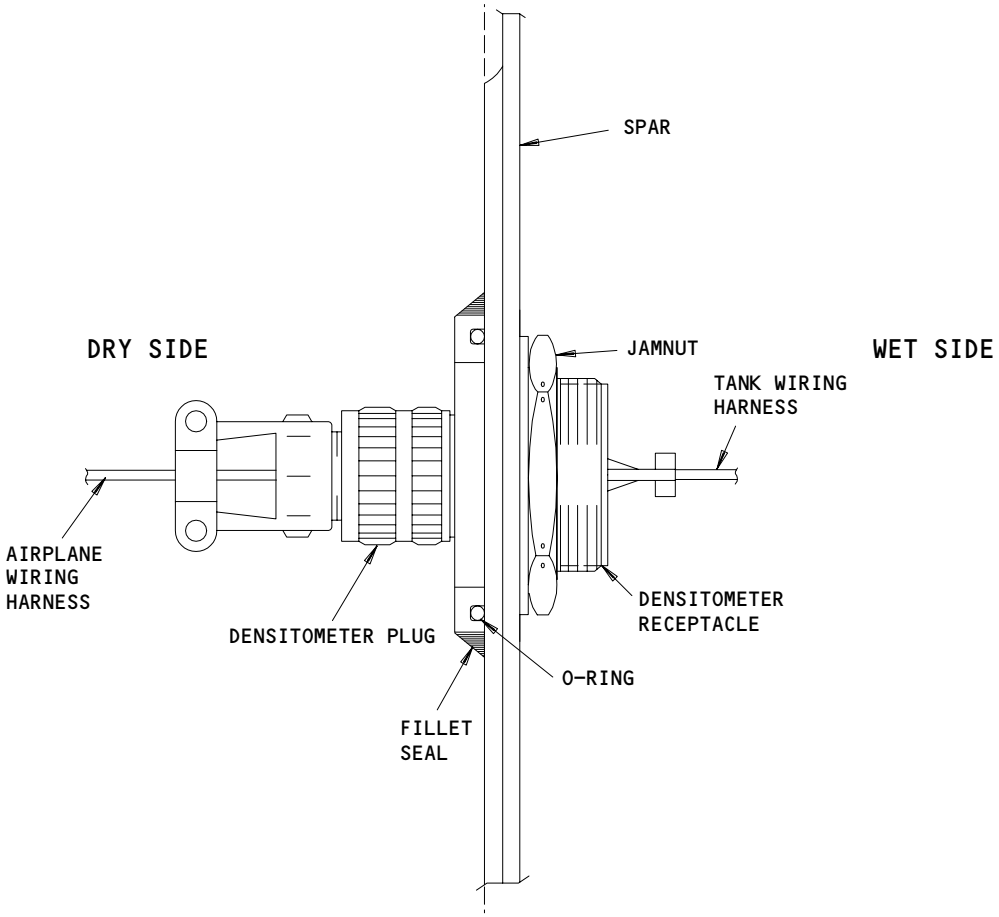

DENSITOMETER CONNECTOR
(EXAMPLE)

B

Tank Wiring Harness Connectors
Figure 402 (Sheet 2)

BOEING PROPRIETARY - Copyright (C) - Unpublished Work - See title page for details.

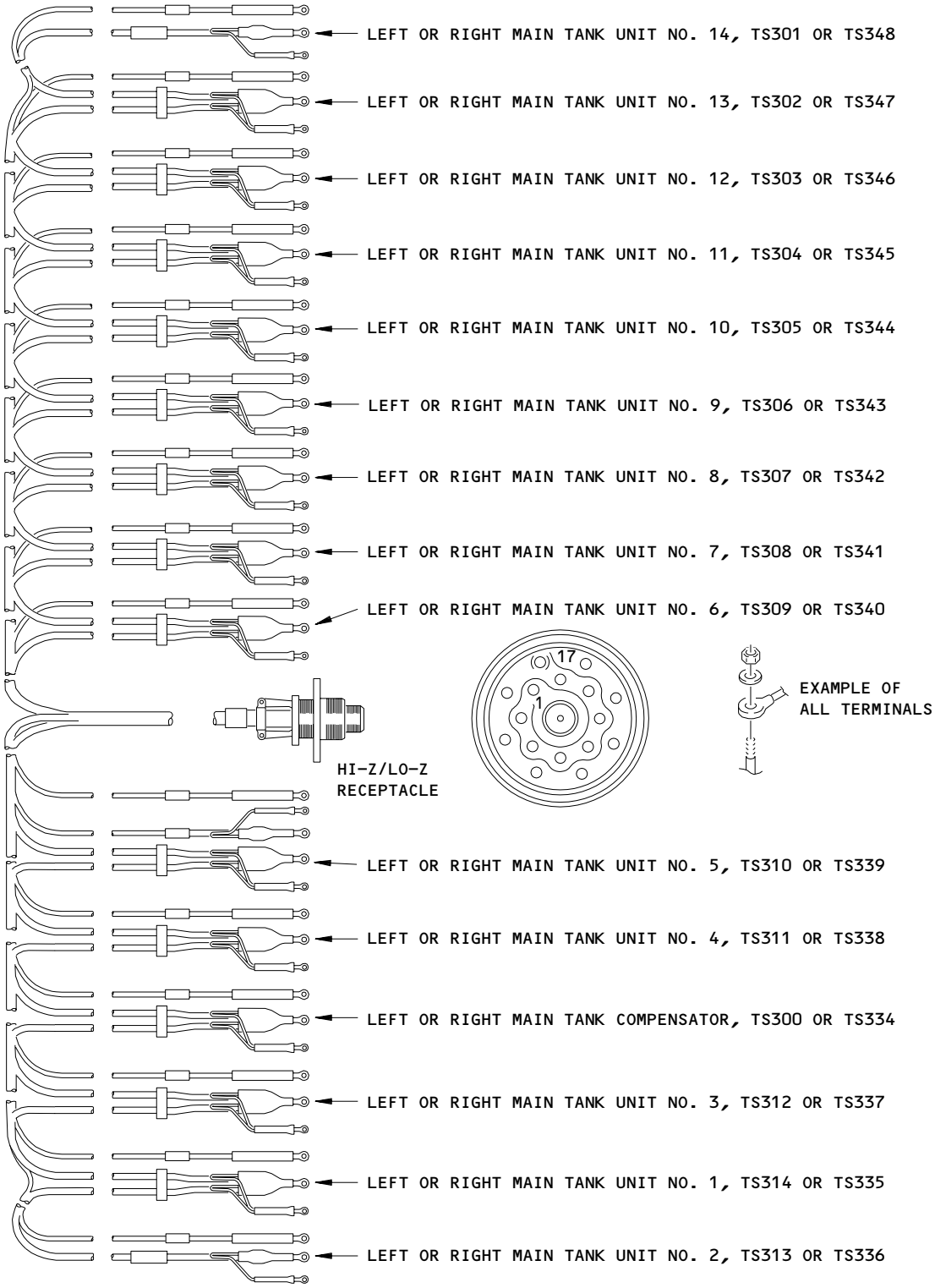

Left or Right Main Tank Wiring Harness,
M726 and M1938 or M727 and M1939, Installation
Figure 403

BOEING PROPRIETARY - Copyright (C) - Unpublished Work - See title page for details.

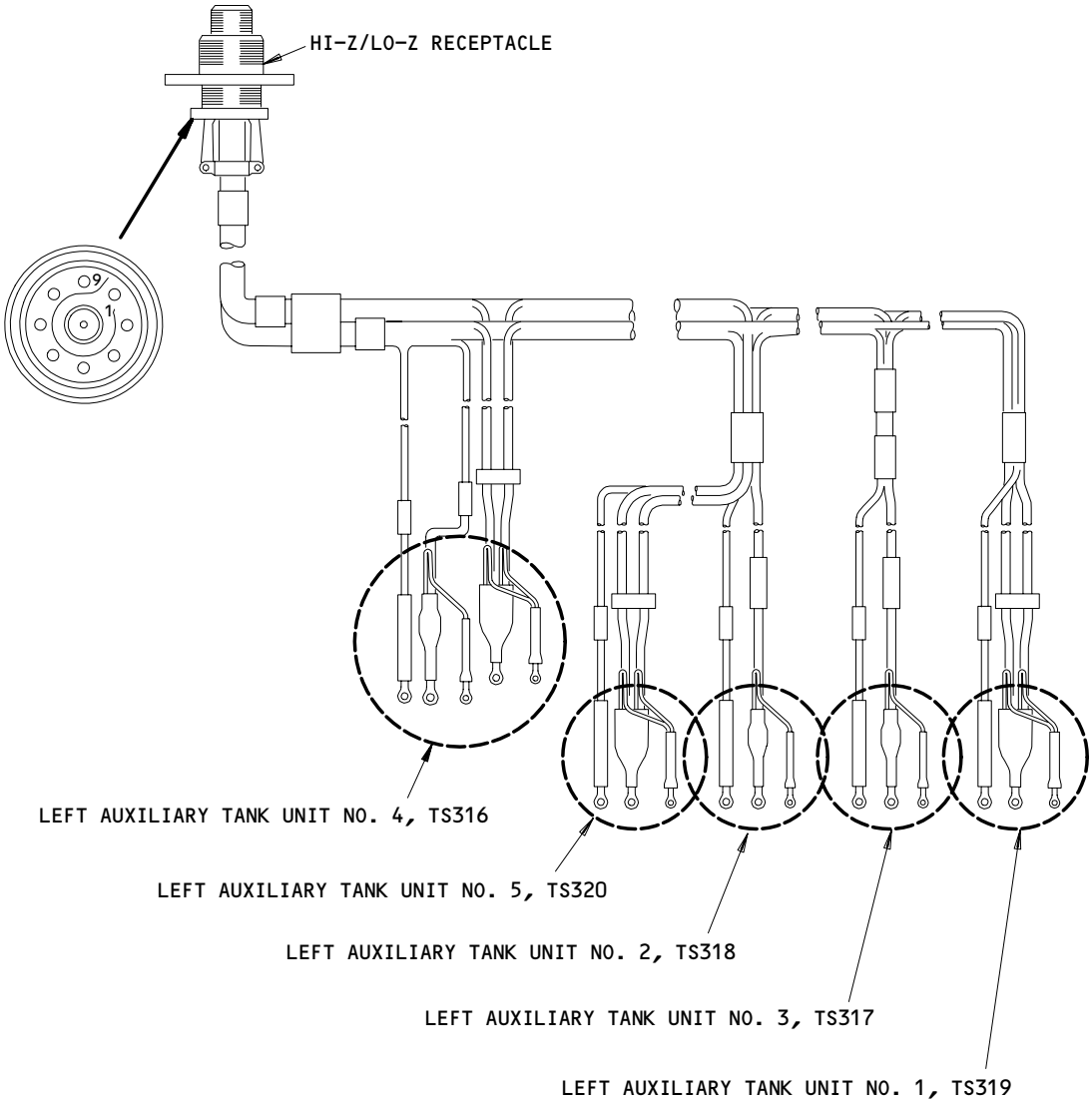

Left Auxiliary Tank Wiring Harness Installation
Figure 404

BOEING PROPRIETARY - Copyright (C) - Unpublished Work - See title page for details.

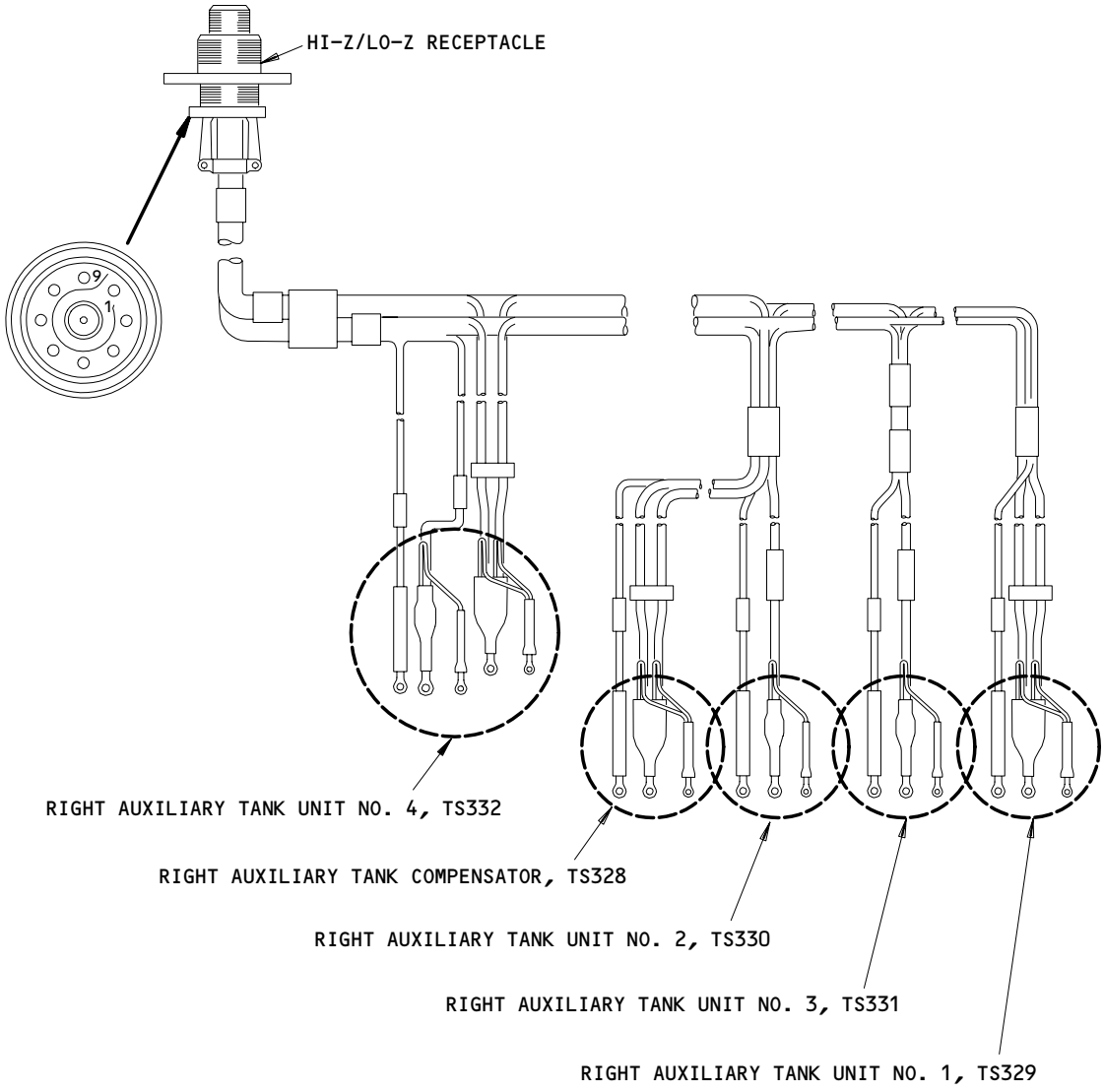

Right Auxiliary Tank Wiring Harness Installation
Figure 405

BOEING PROPRIETARY - Copyright (C) - Unpublished Work - See title page for details.

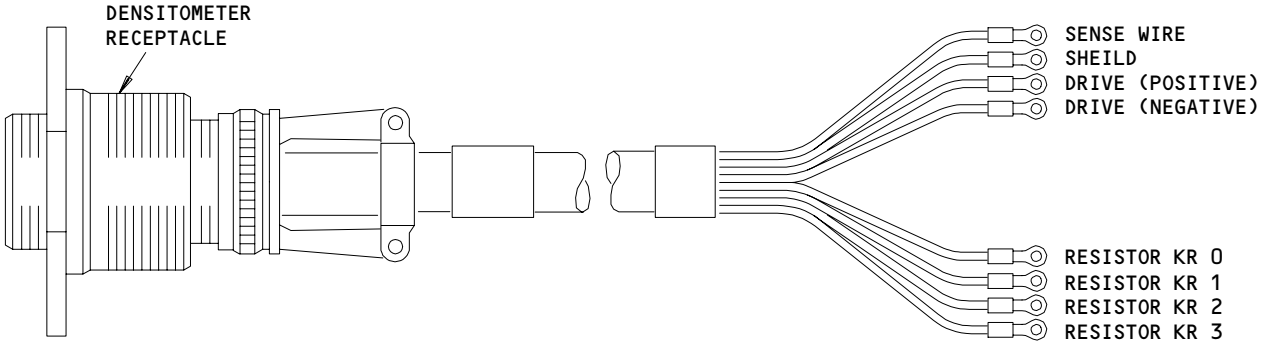

TANK WIRING HARNESS FOR THE DENSITOMETER IN
THE LEFT OR RIGHT MAIN OR AUXILIARY FUEL TANK

Densitometer Tank Wiring Harnesses
Figure 406

BOEING PROPRIETARY - Copyright (C) - Unpublished Work - See title page for details.

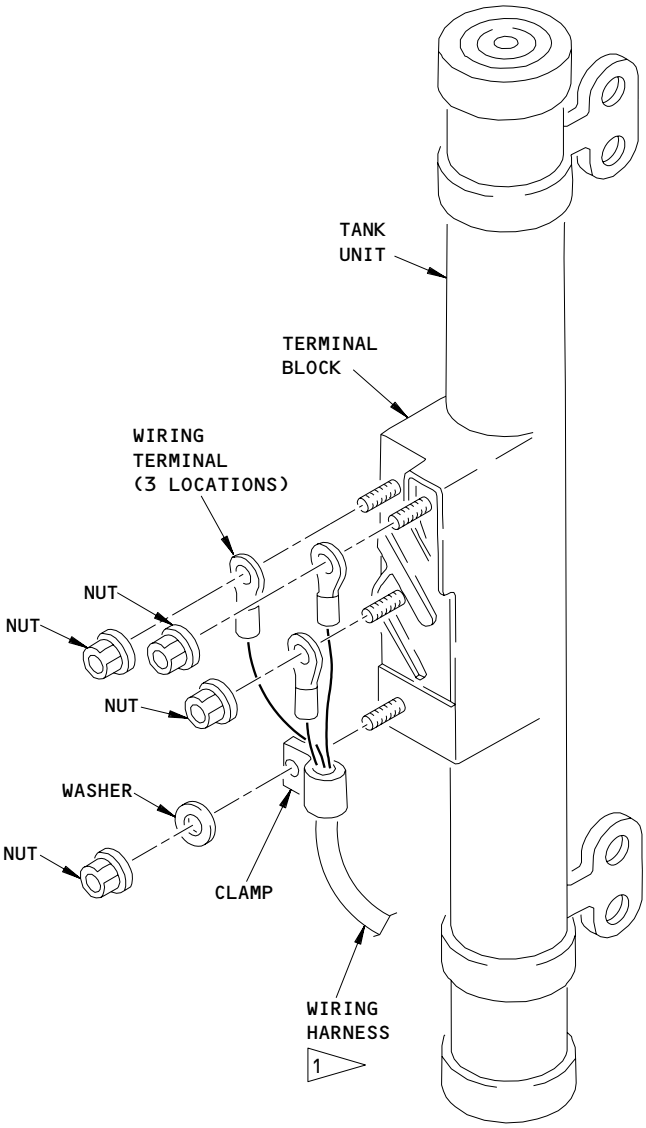

TANK UNIT WIRING HARNESS INSTALLATION
(EXAMPLE)

1 ADJUST WIRE SLACK TO MAINTAIN A CLEARANCE OF 0.5 INCH BETWEEN WIRE AND COMPONENTS OR STRUCTURE.
IF 0.5 INCH CLEARANCE IS NOT POSSIBLE YOU MUST MAINTAIN A MINIMUM OF 0.125 INCH.

FQIS Tank Unit Wiring Harness Installation
Figure 407

BOEING PROPRIETARY - Copyright (C) - Unpublished Work - See title page for details.

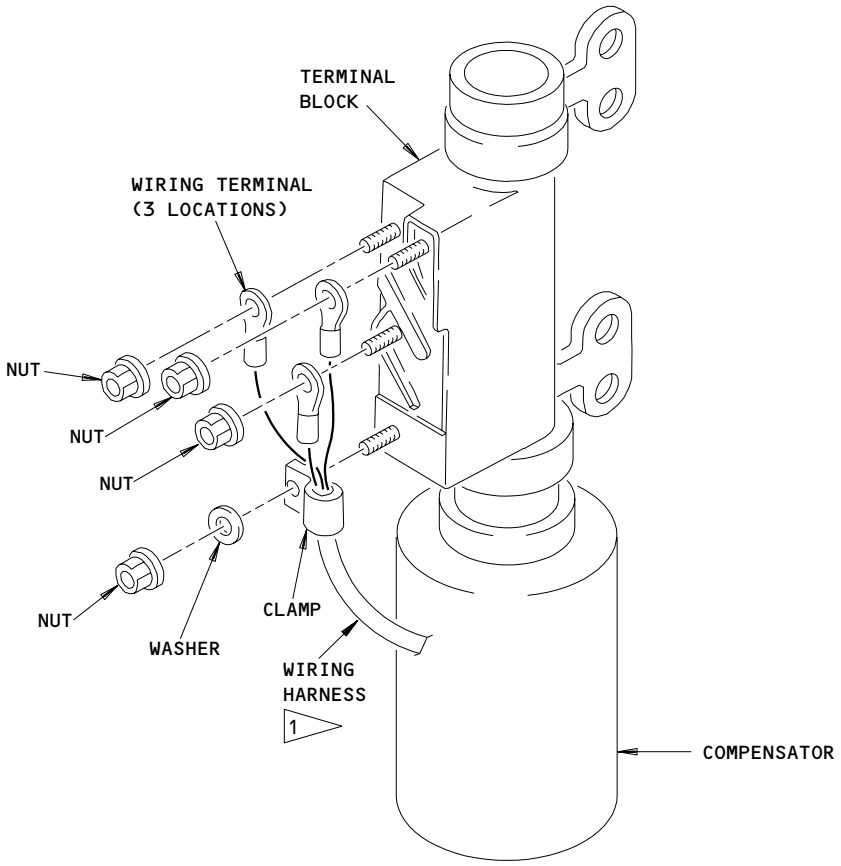

LEFT MAIN, CENTER OR RIGHT MAIN TANK COMPENSATOR

A

1 ADJUST WIRE SLACK TO MAINTAIN A CLEARANCE OF 0.5 INCH BETWEEN WIRE AND COMPONENTS OR STRUCTURE.
IF 0.5 INCH CLEARANCE IS NOT POSSIBLE YOU MUST MAINTAIN A MINIMUM OF 0.125 INCH.

Compensator Wiring Harness Installation
Figure 408

BOEING PROPRIETARY - Copyright (C) - Unpublished Work - See title page for details.

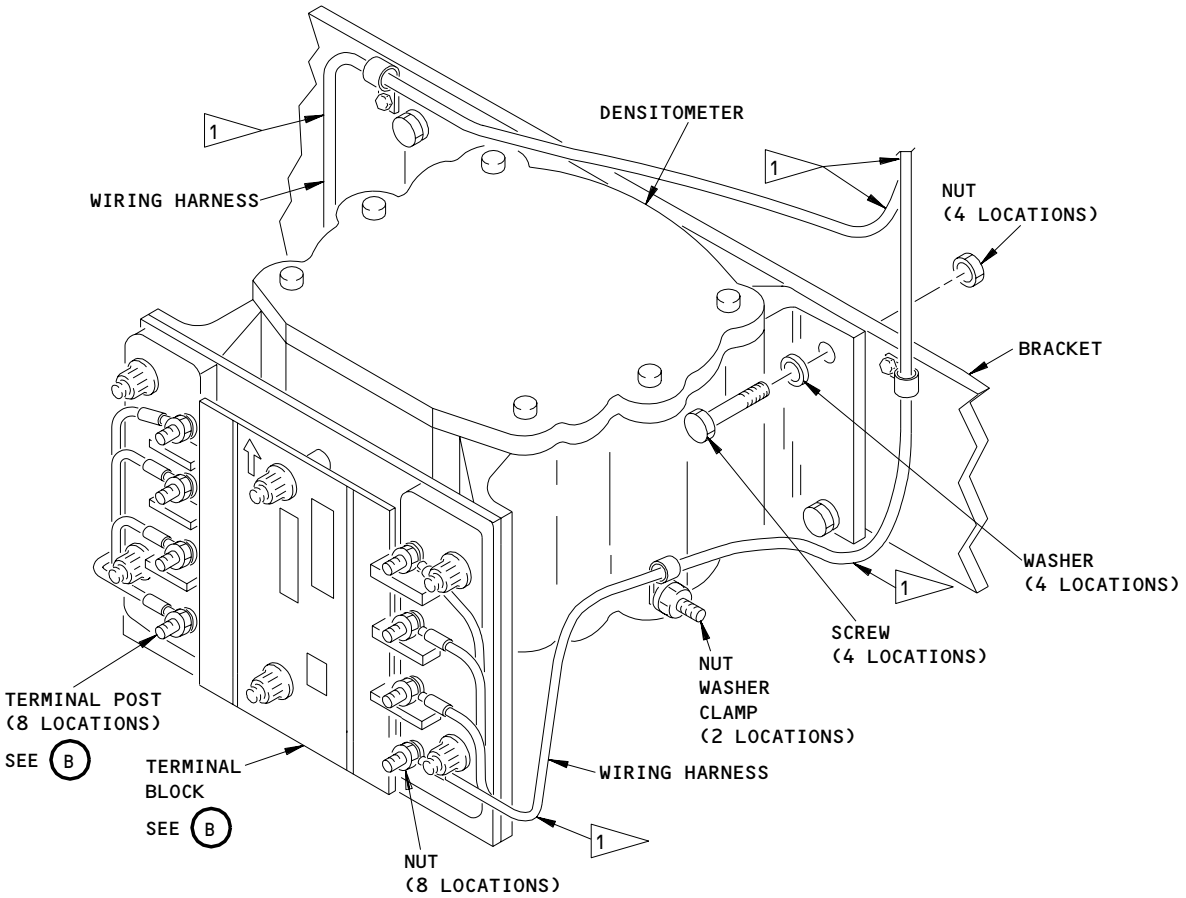

LEFT MAIN, RIGHT MAIN, OR AUXILIARY TANK DENSITOMETER

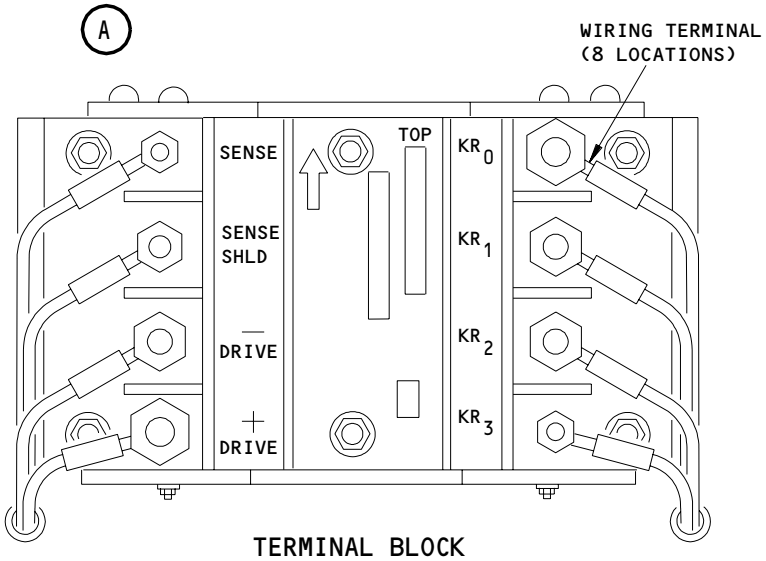

TERMINAL BLOCK

B

1 ADJUST WIRE SLACK TO MAINTAIN A CLEARANCE OF 0.5 INCH BETWEEN WIRE AND COMPONENTS OR STRUCTURE. IF 0.5 INCH CLEARANCE IS NOT POSSIBLE YOU MUST MAINTAIN A MINIMUM OF 0.125 INCH.

Densitometer Wiring Harness Installation
Figure 409

BOEING PROPRIETARY - Copyright (C) - Unpublished Work - See title page for details.

(2) Access Panels
551QB Access Panel (Left)
552GB Access Panel (Left)
651QB Access Panel (Right)
652HB Access Panel (Right)

C. Procedure

S 654-002-002
(1) Defuel the applicable fuel tank (AMM 28-26-00/201).

S 654-003-002
(2) Drain and purge the applicable fuel tank (AMM 28-11-00/201).

S 014-004-002
(3) For the tank wiring harnesses in the left or right main fuel tank, remove the applicable main tank access doors (AMM 28-11-01/401).

S 014-005-002
(4) For the tank wiring harnesses in the auxiliary fuel tank, remove the applicable auxiliary tank access doors (AMM 28-11-02/401).

S 864-006-002
(5) Open this circuit breaker on the main power distribution panel, P6, and attach a DO-NOT-CLOSE tag:
(a) 6E4, FUELING QTY

S 864-007-002
(6) Open these circuit breakers on the overhead circuit breaker panel, P11, and attach DO-NOT-CLOSE tags:
(a) 11C34, FUEL QTY 1
(b) 11M19, FUEL QTY 2

S 864-008-002
(7) Open this circuit breaker on the APU external power panel, P34, and attach a DO-NOT-CLOSE tag:
(a) 34L2, FUEL QTY REFUEL

S 944-009-002

WARNING: OBEY THE FUEL TANK ENTRY PRECAUTIONS. FAILURE TO OBEY THE FUEL TANK ENTRY PRECAUTIONS COULD CAUSE INJURY TO PERSONS OR DAMAGE TO EQUIPMENT.

(8) Obey the fuel tank entry precautions (AMM 28-11-00/201).

BOEING PROPRIETARY - Copyright (C) - Unpublished Work - See title page for details.

S 014-010-002
(9) Go into the applicable fuel tank.

S 034-011-002
(10) Disconnect the wiring terminals of the tank wiring harness from the terminal block of the tank unit, compensator, or densitometer.

S 034-014-002
(11) Remove any restraining clamps from the tank units, compensator, or densitometer.

S 034-018-002
(12) Move the wiring away from the tank unit, compensator, or densitometer.

S 034-019-002
(13) Remove all the cable clamps that attach the applicable tank wiring harness to the structure in the fuel tank.
(a) Make a record of the routing of the tank wiring harness to help with the installation.

S 014-020-002
(14) To get access to the HI-Z/LO-Z connector plug or the densitometer plug in the auxiliary fuel tank, do the steps that follow:
(a) Make sure the downlocks are installed on the nose and main landing gear (AMM 32-00-20/201).

WARNING: USE THE PROCEDURE IN AMM 32-00-15/201 TO INSTALL THE DOOR LOCKS. THE DOORS OPEN AND CLOSE QUICKLY AND CAN CAUSE INJURY TO PERSONS OR DAMAGE TO EQUIPMENT.

(b) Open the doors for the landing gear and install the door locks (AMM 32-00-15/201).

S 014-021-002
(15) To get access to the HI-Z/LO-Z connector plug in the left main fuel tank, remove the access panel 552GB (AMM 06-44-00/201).

BOEING PROPRIETARY - Copyright (C) - Unpublished Work - See title page for details.

S 014-067-002
(16) To get access to the densitometer plug in the left main fuel tank, remove the access panel 551QB (AMM 06-44-00/201).

S 014-022-002
(17) To get access to the HI-Z/LO-Z connector plug in the right main fuel tank, remove the access panel 652HB (AMM 06-44-00/201).

S 014-068-002
(18) To get access to the densitometer plug in the right main fuel tank, remove the access panel 651QB (AMM 06-44-00/201).

S 034-023-002
(19) Disconnect the HI-Z/LO-Z connector plug or the densitometer plug on the aft face of the rear spar (Fig. 402).

S 034-024-002
(20) Remove the jamnut that holds each receptacle in position on the rear spar.

S 024-025-002
(21) Remove the receptacles from the rear spar.

S 034-026-002
(22) Discard the O-rings.

S 024-027-002
(23) Remove the tank wiring harness (1, 2, 3) or the densitometer tank harness (4, 5) from the fuel tank (Fig. 401).

TASK 28-41-09-404-028-002
3. Install the Tank Wiring Harness
A. General
(1) Installation of the tank wiring harness must be per the following procedure.

NOTE: CDCCL - Refer to the task: Airworthiness Limitation Precautions (AMM 28-00-00/201), for important information on Critical Design Configuration Control Limitations (CDCCLs).

NOTE: This is applicable to Airworthiness Limitation 28-AWL-13.

B. Consumable Materials
(1) A00247 Chromate Type Sealant - BMS 5-95

BOEING PROPRIETARY - Copyright (C) - Unpublished Work - See title page for details.

(2) Sealing Compound - use one of the sealing compounds that follow:
(a) A00767 Sealant - BMS 5-45
(b) A00908 Pro-Seal 860, B 1/6

C. References
(1) AIPC 28-41-09, Fig. 1
(2) AIPC 28-41-09, Fig. 2
(3) AIPC 28-41-09, Fig. 3
(4) AIPC 28-41-09, Fig. 4
(5) AMM 06-44-00/201, Wing Access Doors and Panels
(6) AMM 12-11-01/301, Fuel Tank Pressure Fueling
(7) AMM 20-10-23/401, Lockwires
(8) AMM 24-22-00/201, Electrical Power Control
(9) AMM 28-11-00/201, Fuel Tanks (Purging and Entry)
(10) AMM 28-11-01/401, Main Tank Access Doors
(11) AMM 28-11-02/401, Auxiliary Tank Access Doors
(12) AMM 28-41-00/501, Fuel Quantity Indicating System (FQIS)
(13) AMM 32-00-15/201, Landing Gear Door Locks
(14) AMM 51-31-01/201, Seals and Sealing
(15) SWPM 20-10-11, Installation of Electrical Wires and Harnesses
(16) SWPM 20-10-12, Wire Harness Supports
(17) SWPM 20-10-19, Wire Separation

D. Access
(1) Location Zones

133	Wing Center Section (Left)
134	Wing Center Section (Right)
531	Center Auxiliary Tank (Left)
532	Main Tank - Inboard of Rib No. 10 (Left)
541	Main Tank - Outboard of Rib No. 10 (Left)
551	Lower Wing Structure (Left)
552	MLG Support Beam to Trailing Edge (Left)
631	Center Auxiliary Tank (Right)
632	Main Tank - Inboard of Rib No. 10 (Right)
641	Main Tank - Outboard of Rib No. 10 (Right)
651	Lower Wing Structure (Right)
652	MLG Support Beam to Trailing Edge (Right)

BOEING PROPRIETARY - Copyright (C) - Unpublished Work - See title page for details.

(2) Access Panels

551QB	Access Panel (Left)
552GB	Access Panel (Left)
651QB	Access Panel (Right)
652HB	Access Panel (Right)

E. Procedure

S 944-029-002

WARNING: OBEY THE FUEL TANK ENTRY PRECAUTIONS. FAILURE TO OBEY THE FUEL TANK ENTRY PRECAUTIONS COULD CAUSE INJURY TO PERSONS OR DAMAGE TO EQUIPMENT.

(1) Obey the fuel tank entry precautions (AMM 28-11-00/201).

S 014-030-002

(2) Go into the fuel tank.

S 214-031-002

(3) Make sure the receptacle mating surfaces on the rear spar are clean for the applicable wiring harness (Fig. 402).

NOTE: CDCCL - Refer to the task: Airworthiness Limitation Precautions (AMM 28-00-00/201), for important information on Critical Design Configuration Control Limitations (CDCCLs).

NOTE: This is applicable to Airworthiness Limitation 28-AWL-13.

S 434-032-002

(4) Install the new O-ring in the groove on the mating surface of the applicable receptacle.

NOTE: CDCCL - Refer to the task: Airworthiness Limitation Precautions (AMM 28-00-00/201), for important information on Critical Design Configuration Control Limitations (CDCCLs).

NOTE: This is applicable to Airworthiness Limitation 28-AWL-13.

S 424-033-002

(5) Put the applicable receptacle in the hole on the rear spar.

S 434-034-002

(6) For the HI-Z/LO-Z receptacle, install the jamnut on the receptacle at the aft face (dry side) of the rear spar.

S 434-064-002

(7) For the densitometer receptacle, install the jamnut on the forward face (wet side) of the rear spar.

BOEING PROPRIETARY - Copyright (C) - Unpublished Work - See title page for details.

S 434-035-002
(8) Tighten the jamnut to 180-240 inch-pounds (20-28 Nm).

NOTE: CDCCL - Refer to the task: Airworthiness Limitation Precautions (AMM 28-00-00/201), for important information on Critical Design Configuration Control Limitations (CDCCLs).

NOTE: This is applicable to Airworthiness Limitation 28-AWL-13.

S 394-036-002
(9) Use the sealing compound (BMS 5-45 or Pro-Seal 860) to apply a fillet seal around the hermetic connector or in the fuel tank (AMM 51-31-01/201).

NOTE: CDCCL - Refer to the task: Airworthiness Limitation Precautions (AMM 28-00-00/201), for important information on Critical Design Configuration Control Limitations (CDCCLs).

NOTE: This is applicable to Airworthiness Limitation 28-AWL-13.

S 034-037-002
(10) Connect the applicable HI-Z/LO-Z plug or densitometer plug to its receptacle.

S 914-039-002
(11) Install lockwire, if applicable, between the applicable plug and the jamnut (AMM 20-10-23/401).

S 394-041-002
(12) Apply fillet seals around the jamnuts with chromate type sealant (BMS 5-95) (AMM 51-31-01/201).

BOEING PROPRIETARY - Copyright (C) - Unpublished Work - See title page for details.

S 424-043-002

CAUTION: BE CAREFUL WHEN YOU INSTALL THE TANK WIRING HARNESS THROUGH OPEN AREAS AT THE TOP OF THE RIBS. IF YOU ARE NOT CAREFUL, DAMAGE TO THE WIRES OF THE TANK WIRING HARNESS CAN OCCUR.

(13) Put the tank wiring harness (1, 2, 3) or the densitometer tank wiring harness (4, 5) in position and install the clamps (SWPM 20-10-11, SWPM 20-10-12, SWPM 20-10-19). (Fig. 401, Fig. 402).

(a) Adjust wire slack to maintain a clearance of 0.5 inch (12.7 mm) between wire and components or structure. If 0.5 inch (12.7 mm) clearance is not possible, you must maintain a minimum of 0.125 inch (3.2 mm) clearance.

NOTE: CDCCL - Refer to the task: Airworthiness Limitation Precautions (AMM 28-00-00/201), for important information on Critical Design Configuration Control Limitations (CDCCLs).

NOTE: This is applicable to Airworthiness Limitation 28-AWL-13.

(b) Install the tank wiring harness and clamps.

S 434-070-002

(14) Put the wiring terminals on the terminal blocks of each tank unit, compensator, and densitometer (Fig. 407, Fig. 408, Fig. 409).

S 434-045-002

(15) Install the nuts and washers on the terminal posts of the terminal blocks.

NOTE: The terminal connections for the tank units, compensators densitometers are different sizes to prevent errors in connections.

S 434-047-002

(16) For the tank units and compensators, tighten the nuts to these limits:

NUT	TORQUE VALUE
HI-Z	12-15 pound-inches
LO-Z	25-35 pound-inches
SHIELD	15-20 pound-inches

BOEING PROPRIETARY - Copyright (C) - Unpublished Work - See title page for details.

S 434-050-002
(17) For the densitometer, tighten the nuts to these values:

TERMINAL	TORQUE VALUE	NUT SIZE
SENSE	6-8 POUND-INCHES	0.112-40
SENSE SHIELD	12-15 POUND-INCHES	0.138-32
DRIVE -	15-20 POUND-INCHES	0.164-32
DRIVE +	25-30 POUND-INCHES	0.190-32
KR0	25-30 POUND-INCHES	0.190-32
KR1	15-20 POUND-INCHES	0.164-32
KR2	12-15 POUND-INCHES	0.138-32
KR3	6-8 POUND-INCHES	0.112-40

S 094-051-002

CAUTION: MAKE SURE YOU REMOVE ALL EQUIPMENT, MATERIALS AND UNWANTED PARTICLES FROM IN THE FUEL TANK. UNWANTED MATERIALS CAN BLOCK THE PUMPS AND PREVENT THE SCAVENGE OF FUEL.

(18) Remove the purging and ventilating equipment (AMM 28-11-00/201).

S 414-052-002
(19) For the tank wiring harness in the left or right main fuel tank, install the main tank access doors that are removed (AMM 28-11-01/401).

S 414-053-002
(20) For the tank wiring harnesses in the auxiliary fuel tank, install the auxiliary tank access doors that are removed (AMM 28-11-02/401).

BOEING PROPRIETARY - Copyright (C) - Unpublished Work - See title page for details.

S 864-054-002
(21) Remove the DO-NOT-CLOSE tag and close this circuit breaker on the P6 panel:
(a) 6E4, FUELING QTY

S 864-055-002
(22) Remove the DO-NOT-CLOSE tags and close these circuit breakers on the P11 panel:
(a) 11C34, FUEL QTY 1
(b) 11M19, FUEL QTY 2

S 864-056-002
(23) Remove the DO-NOT-CLOSE tag and close this circuit breaker on the P34 panel:
(a) 34L2, FUEL QTY REFUEL

S 864-057-002
(24) Supply electrical power (AMM 24-22-00/201).

S 654-058-002
(25) Refuel the applicable fuel tank, if no more work is necessary (AMM 12-11-01/301).

S 744-059-002
(26) Do the fuel quantity BITE procedure "Self Test ?" (AMM 28-41-00/501).

S 414-060-002

WARNING: USE THE PROCEDURE IN AMM 32-00-15/201 TO REMOVE THE DOOR LOCKS. THE DOORS OPEN AND CLOSE QUICKLY AND CAN CAUSE INJURY TO PERSONS OR DAMAGE TO EQUIPMENT.

(27) Remove the door locks from the landing gear doors and close the doors, if opened (AMM 32-00-15/201).

S 414-061-002
(28) If removed, install the left or right access panel, 551QB, 552GB, 651QB or 652HB (AMM 06-44-00/201).

S 864-062-002
(29) Remove electrical power if it is not necessary (AMM 24-22-00/201).

BOEING PROPRIETARY - Copyright (C) - Unpublished Work - See title page for details.

FQIS TANK WIRING HARNESS - INSPECTION/CHECK

1. General
   A. The tank wiring harness is part of the fuel quantity indicating system (FQIS). There is a tank wiring harness in the left main, right main, left auxiliary and right auxiliary fuel tank. The procedure to inspect each tank wiring harness is the same.

TASK 28-41-09-206-063

2. Inspect the Tank Wiring Harness (Fig. 601)
   A. References
      (1) AMM 28-11-00/201, Fuel Tanks (Purging and Entry)
      (2) AMM 28-11-01/401, Main Tank Access Doors
      (3) AMM 28-11-02/401, Auxiliary Tank Access Doors
      (4) AMM 28-26-00/201, Defueling
   B. Access
      (1) Location Zones

133	Wing Center Section (Left)
134	Wing Center Section (Right)
531	Center Auxiliary Tank (Left)
532	Main Tank - Inboard of Rib No. 10 (Left)
541	Main Tank - Outboard of Rib No. 10 (Left)
631	Center Auxiliary Tank (Right)
632	Main Tank - Inboard of Rib No. 10 (Right)
641	Main Tank - Outboard of Rib No. 10 (Right)

   C. Procedure

      S 656-002
      (1) Defuel the applicable fuel tank (AMM 28-26-00/201).

      S 656-003
      (2) Drain and purge the applicable fuel tank (AMM 28-11-00/201).

      S 016-004
      (3) Remove the applicable main or center tank access doors (AMM 28-11-01/401 or AMM 28-11-02/401).

BOEING PROPRIETARY - Copyright (C) - Unpublished Work - See title page for details.

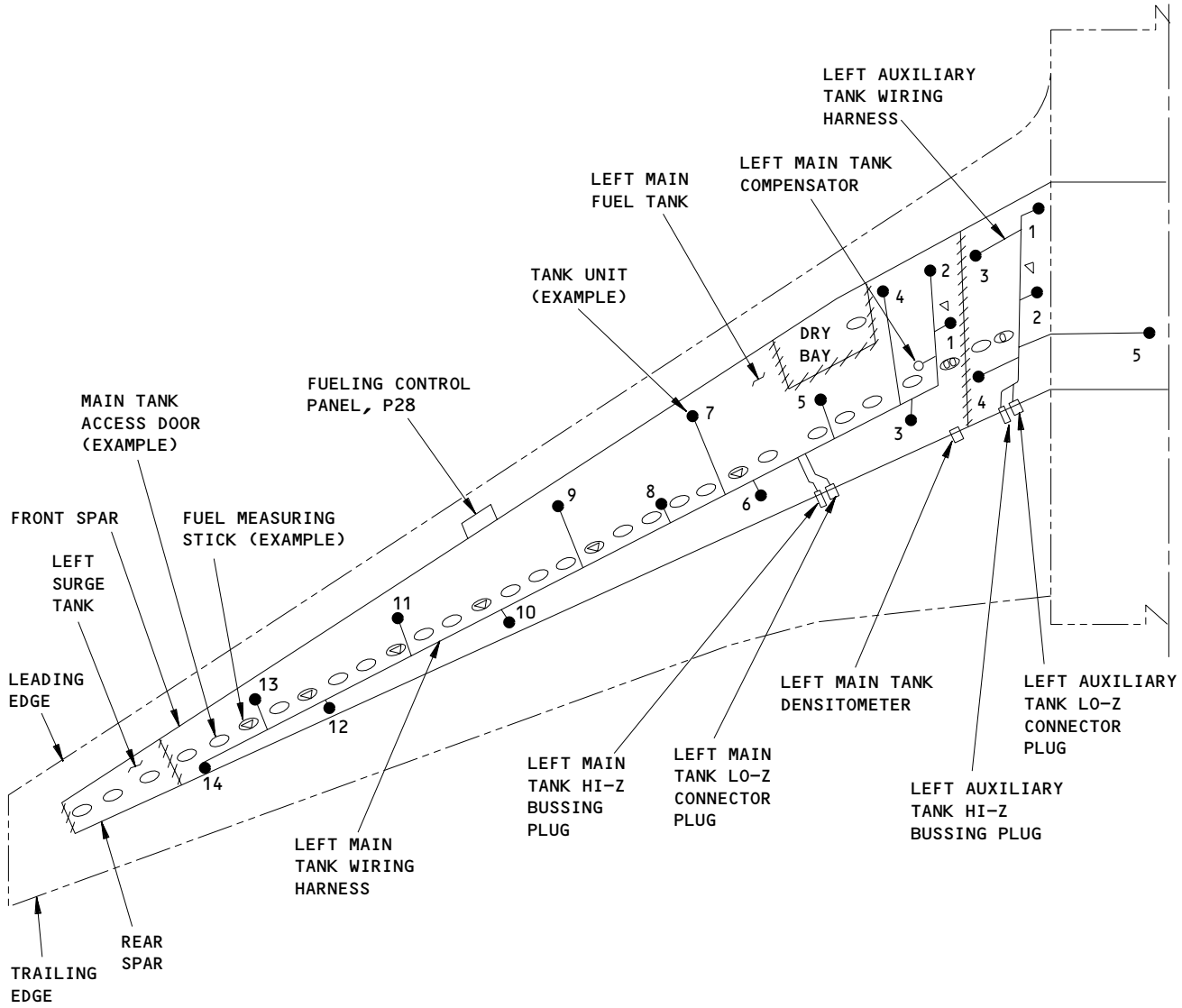

LEFT WING

Tank Wiring Harness
Figure 601 (Sheet 1)

BOEING PROPRIETARY - Copyright (C) - Unpublished Work - See title page for details.

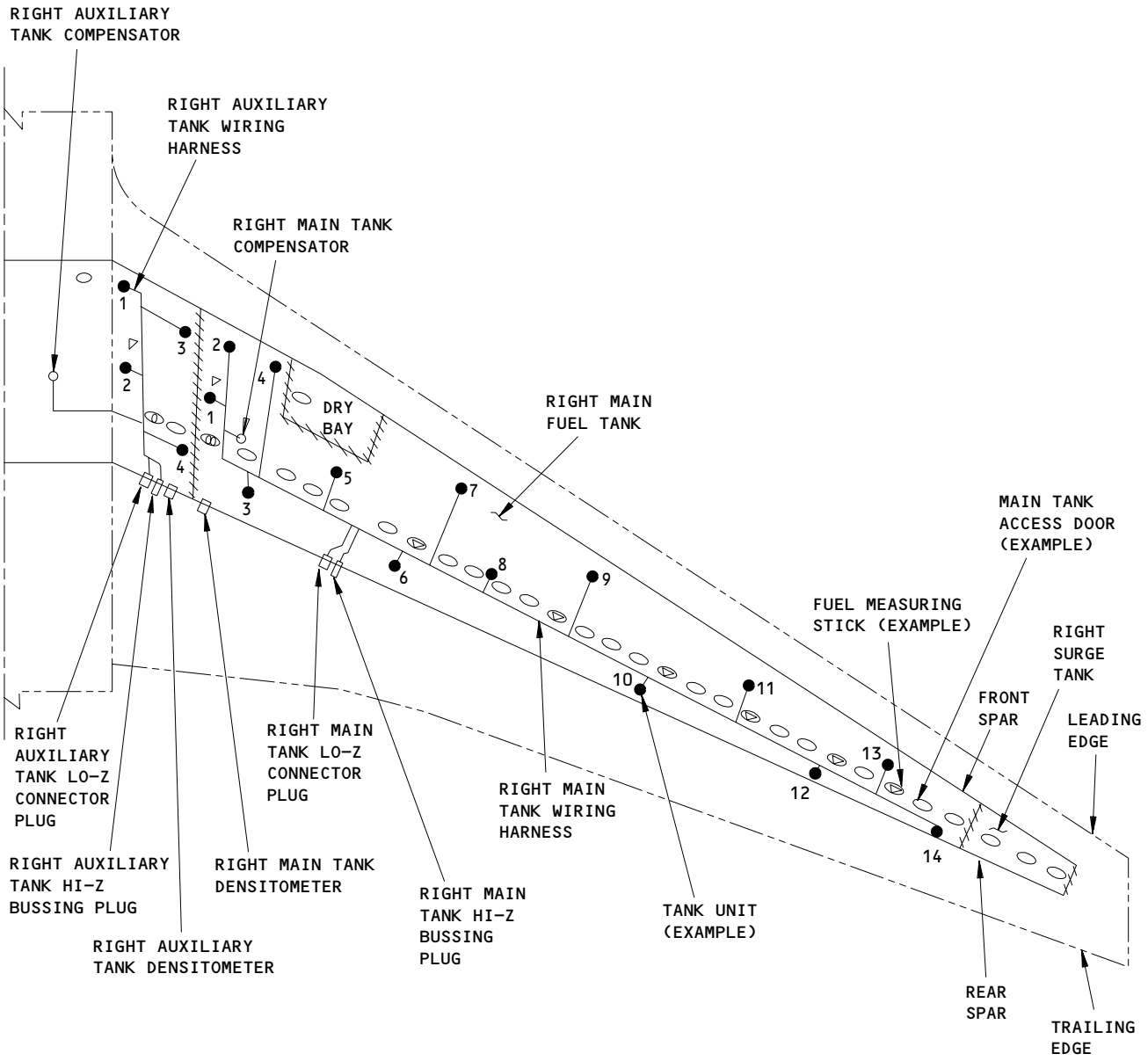

RIGHT WING

Tank Wiring Harness
Figure 601 (Sheet 2)

BOEING PROPRIETARY - Copyright (C) - Unpublished Work - See title page for details.

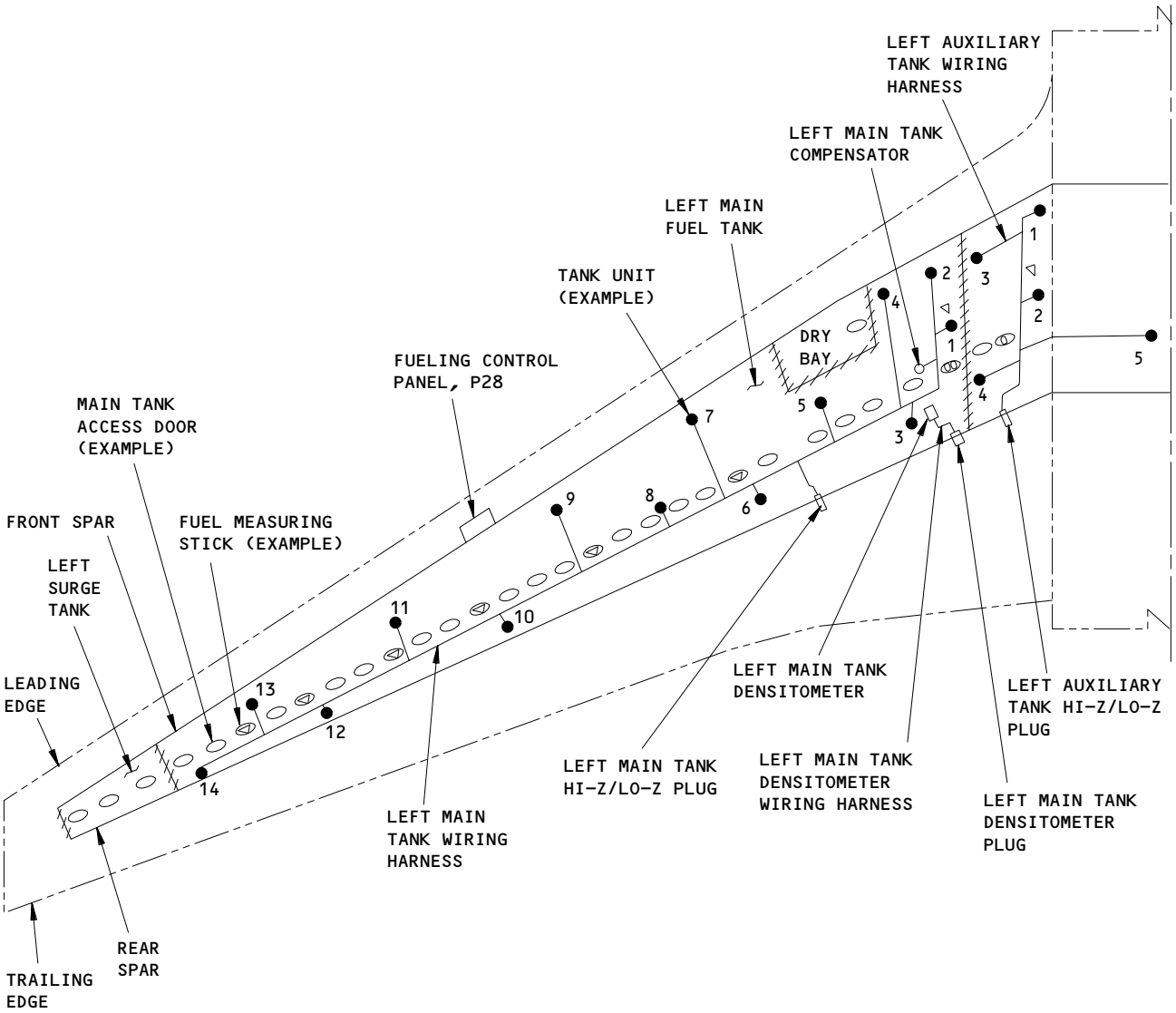

LEFT WING

Tank Wiring Harness
Figure 601 (Sheet 3)

BOEING PROPRIETARY - Copyright (C) - Unpublished Work - See title page for details.

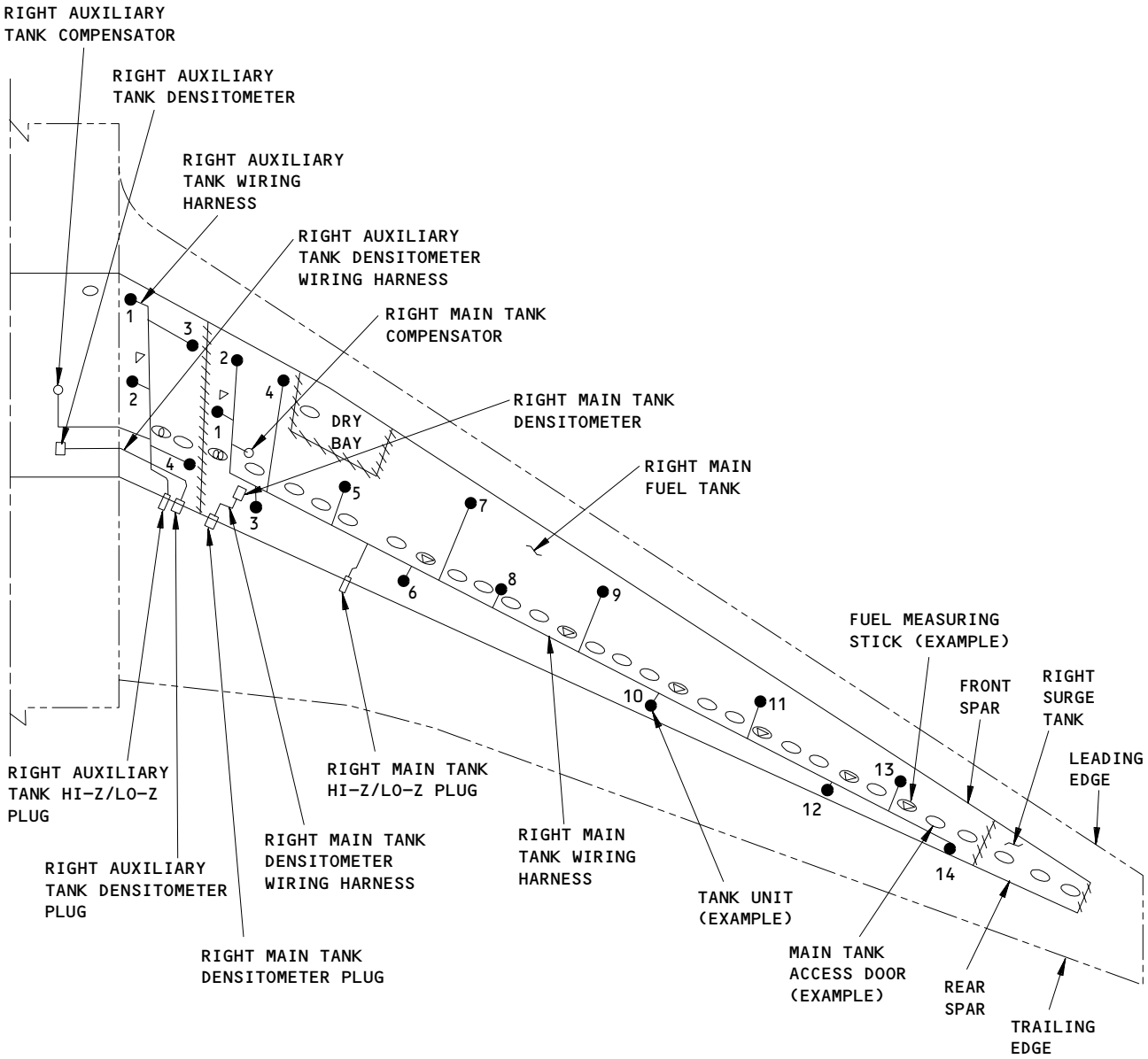

RIGHT WING

Tank Wiring Harness
Figure 601 (Sheet 4)

BOEING PROPRIETARY - Copyright (C) - Unpublished Work - See title page for details.

S 946-009

WARNING: OBEY THE FUEL TANK ENTRY PRECAUTIONS (AMM 28-11-00/201). FAILURE TO OBEY THE FUEL TANK ENTRY PRECAUTIONS COULD CAUSE INJURY TO PERSONS OR DAMAGE TO EQUIPMENT.

(4) Obey the fuel tank entry precautions (AMM 28-11-00/201).

S 016-010

(5) Go into the applicable fuel tank.

S 216-064

(6) Visually inspect the FQIS tank wiring harness for these problems:
   (a) Insulation that is abraded, cracked, or over-stressed.
   (b) Conductors or shields that are broken or exposed.
   (c) Clearance from the structure or fuel tubing that is not sufficient.
   (d) Support clamps that are broken, loose, or missing.
   (e) Wiring that is routed incorrectly.

S 216-065

(7) Visually inspect the compensators, tank units, and densitometers for these problems:
   (a) Wiring that is not correctly attached to the terminals.
   (b) Wiring to the terminal HI-Z or LO-Z that has damage or is incorrectly routed.
   (c) An end cap that is missing (tank unit or compensator).
   (d) Clearance from the structure that is not sufficient.
   (e) Mounting brackets and hardware that are loose.
   (f) Terminals that are bent.

S 216-066

(8) Inspect the electrical connectors and seals for damage, wear, or fuel leakage.

BOEING PROPRIETARY - Copyright (C) - Unpublished Work - See title page for details.

S 096-068
(9) Go out of the fuel tank (AMM 28-11-00/201).

S 416-069
(10) Install the applicable main or center tank access doors (AMM 28-11-01/401 or AMM 28-11-02/401).

BOEING PROPRIETARY - Copyright (C) - Unpublished Work - See title page for details.

DENSITOMETER HOT SHORT PROTECTOR - MAINTENANCE PRACTICES

1. General
   A. This procedure contains tasks to:
      (1) Functionally check the fault current of densitometer hot short proctector.
      (2) Do a detail inspection of the ground straps (bonding jumpers) for the densitometer hot short protector.

TASK 28-41-24-002-001

2. Densitometer Hot Short Protector Fault Current - Functional Check
   A. General
      (1) This task does a resistance check of the ground straps (bonding jumpers) for the densitometer hot short protector.
      (2) The densitometer hot short proctector is only installed for the densitometer in the auxiliary fuel tank, and is installed out of the auxiliary fuel tank on the rear spar.
   B. Access
      (1) Location Zones
          631 Center Auxiliary Tank (Right)

   C. Procedure

      S 012-032
      (1) Get access to the densitometer hot short protector on the aft side of the right wing rear spar near Rib #1.

      S 722-033
      (2) Do a check of the electrical bond of each ground strap (bonding jumper) between the densitometer hot short protector and the rear spar with an electrical bonding ohmmeter (SWPM 20-20-00).
          (a) Make sure the resistance is 0.0025 ohm or less.

TASK 28-41-24-402-017

3. Densitometer Hot Short Protector Ground Strap - Detail Inspection
   A. Access
      (1) Location Zones
          631 Center Auxiliary Tank (Right)

BOEING PROPRIETARY - Copyright (C) - Unpublished Work - See title page for details.

B. Procedure

S 012-034

(1) Get access to the densitometer hot short protector that is on the aft side of the right wing rear spar near Rib #1.

S 212-035

(2) Look at and feel the ground straps (bonding jumpers) on the densitometer hot short protector.
   (a) Make sure that the wire braid on the ground straps does not have broken strands.
   (b) Make sure that the ground strap attachments are not loose.

BOEING PROPRIETARY - Copyright (C) - Unpublished Work - See title page for details.

DENSITOMETER HOT SHORT PROTECTOR - REMOVAL/INSTALLATION

1. General
   A. The hot short protector provides protection from hot shorts to the auxiliary fuel tank densitometer. It is found on rear spar of the auxiliary tank.
   B. This procedure contains two tasks. The first task removes the hot short protector. The second task installs the hot short protector.

TASK 28-41-24-004-001

2. Densitometer Hot Shot Protector Removal (Fig. 401)
   A. References
      (1) AMM 06-44-00/201, Wing Access Doors and Panels
   B. Access
      (1) Location Zones
          631 Center Auxiliary Tank (Right)

   C. Procedure

      S 864-034
      (1) Open these circuit breakers and attach a DO-NOT-CLOSE tags:
          (a) Main Power Distribution Panel, P6:
              1) 6E4, FUELING QTY
          (b) Overhead Circuit Breaker Panel, P11:
              1) 11C34, FUEL QTY 1
              2) 11M19, FUEL QTY 2
          (c) APU External Power Panel, P34:
              1) 34L2, FUEL QTY REFUEL

      S 014-006
      (2) Disconnect the FQPU SIDE and TANK SIDE connectors from the hot short protector (1).

      S 014-007
      (3) Do these steps for the bolt and screw locations:
          (a) Remove the sealant.
          (b) Remove the bolts (3) and (7), screw (5), spacer (6), and washers (4).

      S 034-012
      (4) Remove the hot short protector (1) from its position on the bracket.

TASK 28-41-24-404-017

3. Densitometer Hot Short Protector Installation (Fig. 401)
   A. Consumable Materials
      (1) A00247 Chromate Type Sealant - BMS 5-95

BOEING PROPRIETARY - Copyright (C) - Unpublished Work - See title page for details.

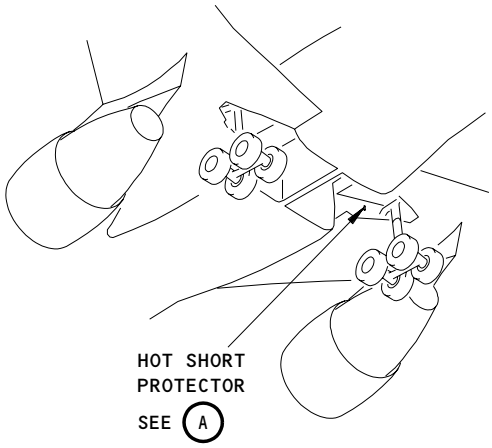

MAIN LANDING GEAR
WHEEL WELL

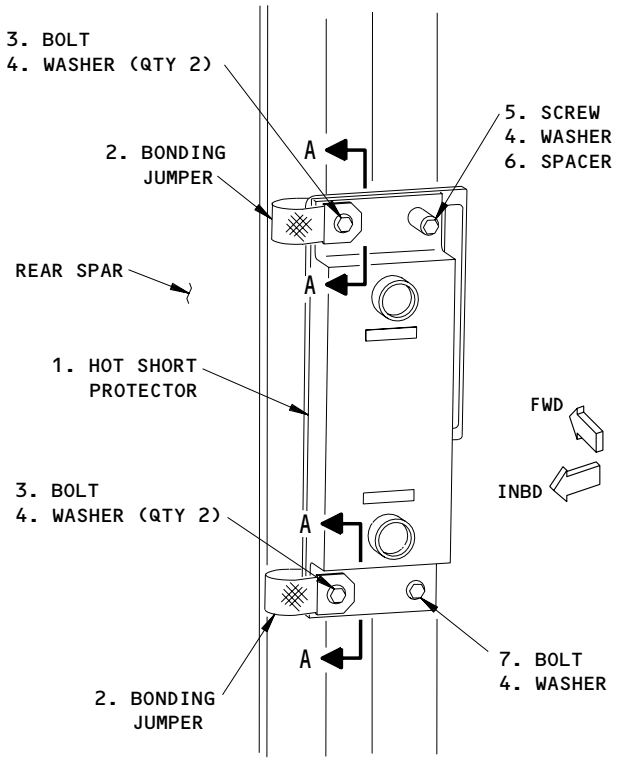

HOT SHORT PROTECTOR
A

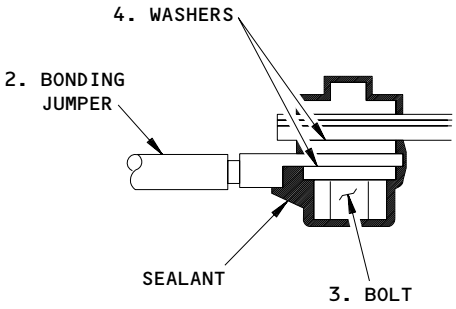

(EXAMPLE)
A-A

Hot Short Protector Installation
Figure 401

BOEING PROPRIETARY - Copyright (C) - Unpublished Work - See title page for details.

B. References
(1) AMM 06-44-00/201, Wing Access Doors and Panels
(2) AMM 51-31-01/201, Seals and Sealing
(3) SWPM 20-20-00, Electrical Bonds and Grounds

C. Access
(1) Location Zones
631 Central Auxiliary Tank (Right)

D. Procedure

S 424-032
(1) Put the hot short protector (1) in position on the bracket.
(a) Use a new hot short protector (1).

NOTE: CDCCL - Refer to the task: Airworthiness Limitation Precautions (AMM 28-00-00/201), for important information on Critical Design Configuration Control Limitations (CDCCLs).

NOTE: This is applicable to Airworthiness Limitation 28-AWL-22.

S 424-019
(2) Install the fasteners:
(a) For the right side fasteners, wet install the bolt (3), screw (5), spacer (6) and washers (4) with sealant.
(b) For the left side fasteners, install the bolts (3), washers (4), and bonding jumpers (2) (SWPM 20-20-00).

NOTE: CDCCL - Refer to the task: Airworthiness Limitation Precautions (AMM 28-00-00/201), for important information on Critical Design Configuration Control Limitations (CDCCLs).

NOTE: This is applicable to Airworthiness Limitation 28-AWL-22.

BOEING PROPRIETARY - Copyright (C) - Unpublished Work - See title page for details.

S 424-020

(3) For the two bonding jumpers, do a check of the electrical bond between the hot short protector fasteners and the airplane structure (SWPM 20-20-00).

NOTE: CDCCL - Refer to the task: Airworthiness Limitation Precautions (AMM 28-00-00/201), for important information on Critical Design Configuration Control Limitations (CDCCLs).

NOTE: This is applicable to Airworthiness Limitation 28-AWL-22.

(a) Make sure the resistance is 0.0025 ohm or less.

NOTE: CDCCL - Refer to the task: Airworthiness Limitation Precautions (AMM 28-00-00/201), for important information on Critical Design Configuration Control Limitations (CDCCLs).

NOTE: This is applicable to Airworthiness Limitation 28-AWL-22.

S 434-021

(4) Do these steps to seal the fasteners:
(a) Seal the fasteners and the nutplates with sealant (AMM 51-31-01/201).

S 424-033

(5) Connect the FQPU SIDE and TANK SIDE connectors to the hot short protector (1).

S 864-022

(6) Remove the DO-NOT-CLOSE tags and close these circuit breakers:
(a) Main Power Distribution panel, P6:
1) 6E4, FUELING QTY
(b) Overhead Circuit Breaker Panel, P11:
1) 11C34, FUEL QTY 1
2) 11M19, FUEL QTY 2
(c) APU External Power Panel, P34:
1) 34L2, FUEL QTY REFUEL

S 734-025

(7) Do these step to make sure you installed the hot short protector (1) correctly:
(a) Supply electrical power (AMM 24-22-00/201).
(b) Do the Operational Test - Fuel Quantity Indicating System (AMM 28-41-00/501).
(c) Remove electrical power if it is not necessary (AMM 24-22-00/201).

BOEING PROPRIETARY - Copyright (C) - Unpublished Work - See title page for details.

DENSITOMETER HOT SHORT PROTECTOR - INSPECTION/CHECK

1. General
   A. This procedure contains a functional check of the bonding resistance between the structure and the densitometer hot short protector (1).

TASK 28-41-24-706-001

2. Densitometer Hot Short Protector - Bonding Resistance Check (Fig. 601)
   A. Equipment
      (1) Bonding Meter - Use one of these:
         (a) Bonding Meter - T477W
             Avtron Manufacturing Co.
             Cleveland, OH
         (b) Bonding Meter - Model M1
             (Serial Number A000012 and subsequent)
             BCD Electronics Ltd.
             Vancouver, Canada
   B. Reference
      (1) AMM 32-00-15/201, Landing Gear Door Locks
      (2) AMM 32-00-20/201, Landing Gear Downlocks
      (3) SWPM 20-20-00, Electrical Bonds and Grounds
   C. Access
      (1) Location Zones
          651 Rear Spar to MLG Support Beam (Right)

   D. Prepare for the Procedure

      S 486-002

      WARNING: MAKE SURE THAT THE DOWNLOCKS ARE INSTALLED IN ALL OF THE LANDING GEAR. WITHOUT THE DOWNLOCKS, THE LANDING GEAR CAN RETRACT AND CAUSE INJURIES TO PERSONS AND DAMAGE TO EQUIPMENT.

      (1) Make sure the downlocks are installed in the nose and main landing gear (AMM 32-00-20/201).

      S 486-003

      WARNING: OBEY THE INSTALLATION PROCEDURE FOR THE DOOR LOCK. THE DOORS OPEN AND CLOSE QUICKLY. THE MOVEMENT OF THE DOORS CAN CAUSE INJURIES TO PERSONS AND DAMAGE TO EQUIPMENT.

      (2) Open the doors for the landing gear and install the door locks (AMM 32-00-15/201).

BOEING PROPRIETARY - Copyright (C) - Unpublished Work - See title page for details.

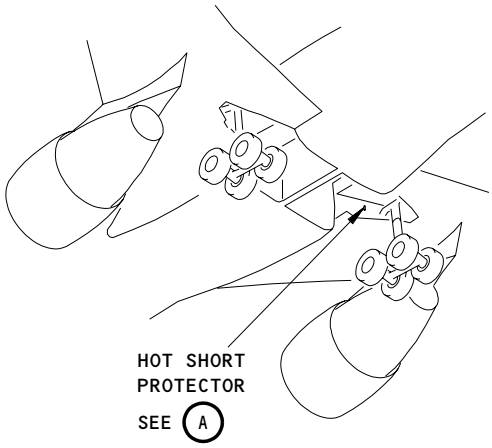

MAIN LANDING GEAR
WHEEL WELL

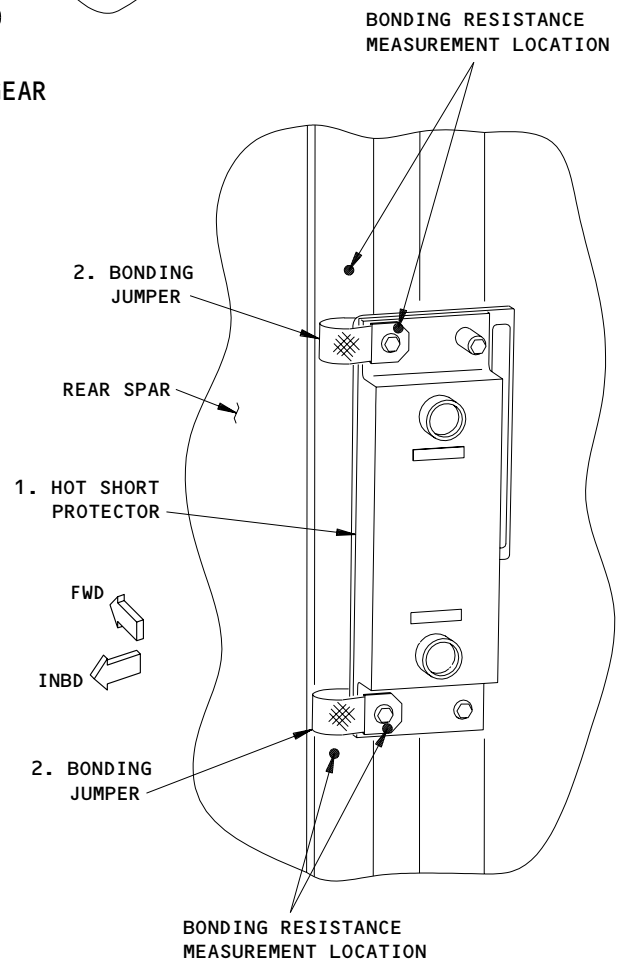

HOT SHORT PROTECTOR

A

Hot Short Protector Inspection
Figure 601

BOEING PROPRIETARY - Copyright (C) - Unpublished Work - See title page for details.

E. Bonding Resistance Check

S 766-004

(1) Measure the bonding resistance between the bonding jumper fastener and the rear spar (SWPM 20-20-00).

NOTE: Bonding measurement is taken at both bonding jumper (2) locations.

(a) Make sure the resistance is 10 milliohms (0.010 ohm) or less.

F. Put the Airplane Back to Its Usual Condition

S 086-005

WARNING: OBEY THE REMOVAL PRECEDURE FOR THE DOOR LOCKS. THE DOORS OPEN AND CLOSE QUICKLY. THE MOVEMENT OF THE DOORS CAN CAUSE INJURIES TO PERSONS AND DAMAGE TO EQUIPMENT.

(1) Remove the door locks from the main gear doors and close the doors (AMM 32-00-15/201).

BOEING PROPRIETARY - Copyright (C) - Unpublished Work - See title page for details.

FUEL PRESSURE INDICATING SYSTEM - DESCRIPTION AND OPERATION

1. General
   A. The fuel pressure indicating system supplies a warning of low fuel pressure to the flight crew. The system monitors the pressure in the fuel boost pumps (AMM 28-22-00/001).
   B. SAS 050, 051, 162-164 WITH SB 28-25, AND SAS 052-149, 155-161, 165-999; MTH 277-999;
      The fuel pressure indicating system also monitors the pressure of the jettison pump (AMM 28-31-00/001).
2. Operation
   A. Engine Fuel Low Pressure (Fig. 1)
      (1) The pressure switches for the boost pumps (for the main fuel tanks) and the override pumps (for the auxiliary fuel tank) are found on the wing rear spar. Sense lines connect each pressure switch to its respective boost pump. Low fuel pressure in a boost pump closes the switch. The pressure switches (6 total) and crossfeed valve position signals are used to generate the Engine Indication and Crew Alerting System (EICAS) messages. EICAS message L, R FUEL SYS PRESS message is shown when when all boost pumps on the L, R side of the crossfeed valve are not producing sufficient pressure and the crossfeed valve is either fully closed or not fully open. This EICAS message alerts the crew that an engine is in the suction feed mode.
      (2) SAS 050, 051, 162-164 POST-SB 28-25;
          SAS 052-149, 155-161, 165-999;
          MTH 277-999;
          The pressure switches of the jettison pumps are found on the rear spar of the wings, inboard of rib No. 2. The sense line connects the pressure switch to the jettison pump. Low pressure in the jettison pump closes the pressure switch. The EICAS message, L or R FUEL JET PUMP, is shown when the fuel jettison switch is ON and the jettison pump does not supply sufficient pressure.
   B. Low Pressure Indication for the Boost Pumps and the Override Pumps (Fig. 2)
      (1) The P5 panel contains the amber PRESS lights for the boost pumps (for the main fuel tanks) and the override pumps (for the auxiliary fuel tank). The boost pump PRESS lights come on when the boost pump switchlights are in the off position or when low fuel pressure exists at the individual pumps. The override pump PRESS lights only come on when the switchlights are ON and low fuel pressure exists at the individual pumps.
      (2) Pressure indication for the boost pumps (in the main fuel tank)
          (a) The pressure switches supply a ground for 28v dc through the PRESS lights. Low fuel pressure lets the pressure switch relax and complete the 28v dc circuit. The PRESS light comes on when the switchlight is off. With the switchlight ON, a time delay relay does not let the PRESS light come on for 10 seconds. The PRESS light will come on again only if low pressure exists at the pressure switch or the switchlight is pushed off.

BOEING PROPRIETARY - Copyright (C) - Unpublished Work - See title page for details.

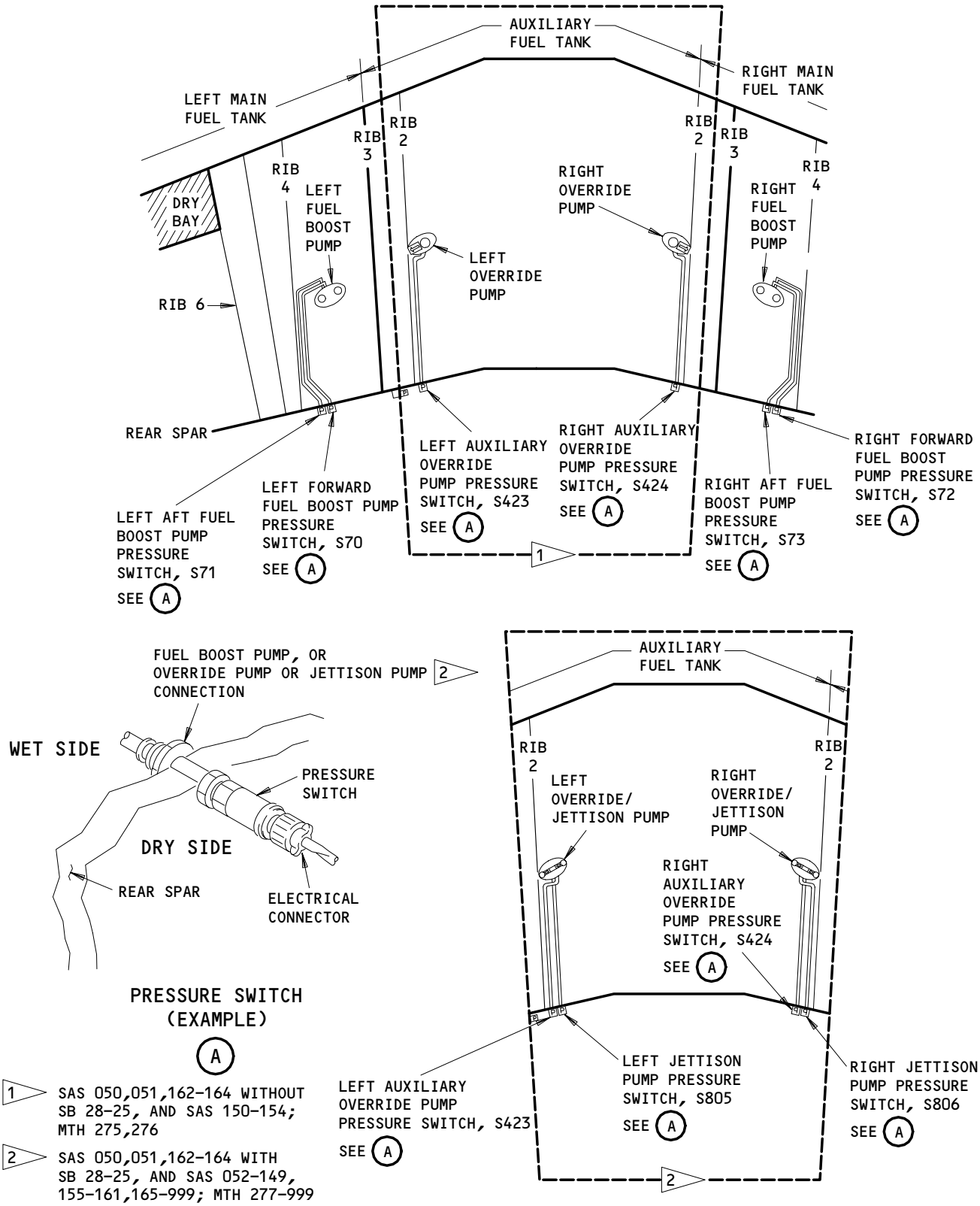

Fuel Pressure Indicating System
Figure 1

BOEING PROPRIETARY - Copyright (C) - Unpublished Work - See title page for details.

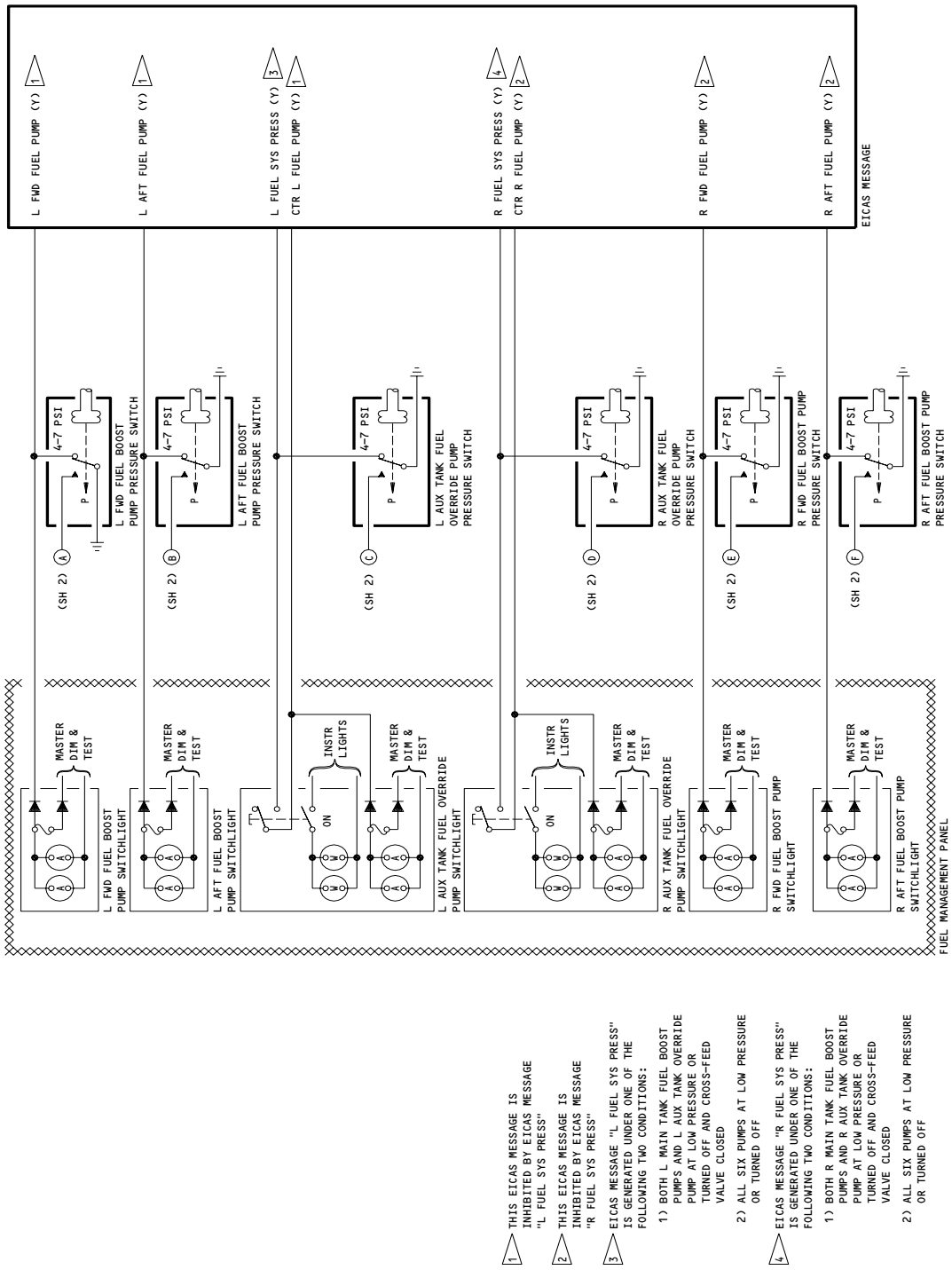

Fuel Pressure Indicating System Schematic
Figure 2 (Sheet 1)

BOEING PROPRIETARY - Copyright (C) - Unpublished Work - See title page for details.

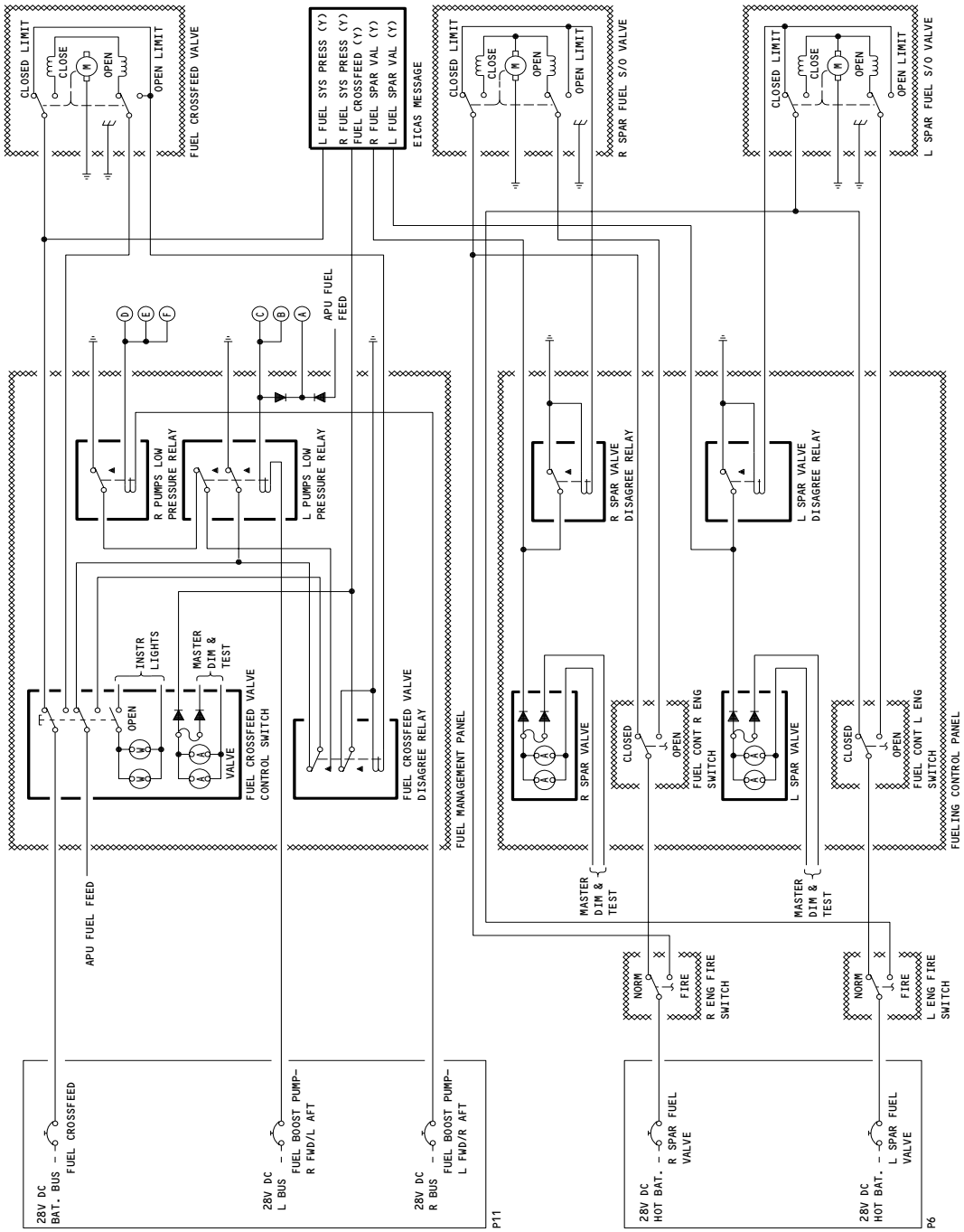

Fuel Pressure Indicating System Schematic
Figure 2 (Sheet 2)

BOEING PROPRIETARY - Copyright (C) - Unpublished Work - See title page for details.

(3) Pressure indication for the override pumps (in the auxiliary fuel tank)

(a) The pressure switches supply a ground for 28v dc through the switchlight only when the switchlight is ON and there is low pressure at the pressure switch. This completes the circuit for the PRESS light to come on. The PRESS light will not come on when the switchlight is in the off position.

(4) EICAS messages

(a) The following EICAS messages, corresponding to the pump PRESS lights, come on when the PRESS lights come on: L FWD FUEL PUMP, L AFT FUEL PUMP, R FWD FUEL PUMP, R AFT FUEL PUMP, CTR L FUEL PUMP, and CTR R FUEL PUMP.

(b) The EICAS messages L, R FUEL SYS PRESS inhibit individual FUEL PUMP EICAS messages. All pumps on same side must be in low pressure condition to cause L, R FUEL SYS PRESS message to come on.

C. SAS 050, 051, 162-164 WITH SB 28-25, AND SAS 052-149, 155-161, 165-999; MTH 277-999;

Low Pressure Indication for the Jettison Pumps

(1) The jettison fault light of the fuel jettison control module is on the overhead panel, P5. The jettison fault light comes on when the fuel jettison switch is ON and there is low pressure at the jettison pump.

(2) The pressure switch supplies a ground for 28v dc power for the fuel jettison system. Low jettison pump pressure lets the pressure switch complete the 28v dc circuit.

BOEING PROPRIETARY - Copyright (C) - Unpublished Work - See title page for details.

FUEL PRESSURE INDICATING SYSTEM

COMPONENT	FIG. 102 SHT	QTY	ACCESS/AREA	AMM REFERENCE
PANEL - (FIM 28-22-00/101)				
FUEL MANAGEMENT, M10055				
SWITCH -				
L AFT FUEL BOOST PUMP PRESSURE, S71	2	1	LEFT WHEEL WELL, REAR SPAR	28-42-01
L AUX OVRD PUMP PRESSURE, S423	2	1	LEFT WHEEL WELL, REAR SPAR	28-42-01
L FWD FUEL BOOST PUMP PRESSURE, S70	2	1	LEFT WHEEL WELL, REAR SPAR	28-42-01
L JETTISON PUMP PRESSURE, S805 1	2	1	LEFT WHEEL WELL, REAR SPAR	28-42-01
R AFT FUEL BOOST PUMP PRESSURE, S73	2	1	RIGHT WHEEL WELL, REAR SPAR	28-42-01
R AUX OVRD PUMP PRESSURE, S424	2	1	RIGHT WHEEL WELL, REAR SPAR	28-42-01
R FWD FUEL BOOST PUMP PRESSURE, S72	2	1	RIGHT WHEEL WELL, REAR SPAR	28-42-01
R JETTISON PUMP PRESSURE, S806 1	2	1	RIGHT WHEEL WELL, REAR SPAR	28-42-01

1 SAS 050,051,162-164 WITH SB 28-25, AND SAS 052-149,155-161,165-999

Fuel Pressure Indicating System - Component Index
Figure 101

BOEING PROPRIETARY - Copyright (C) - Unpublished Work - See title page for details.

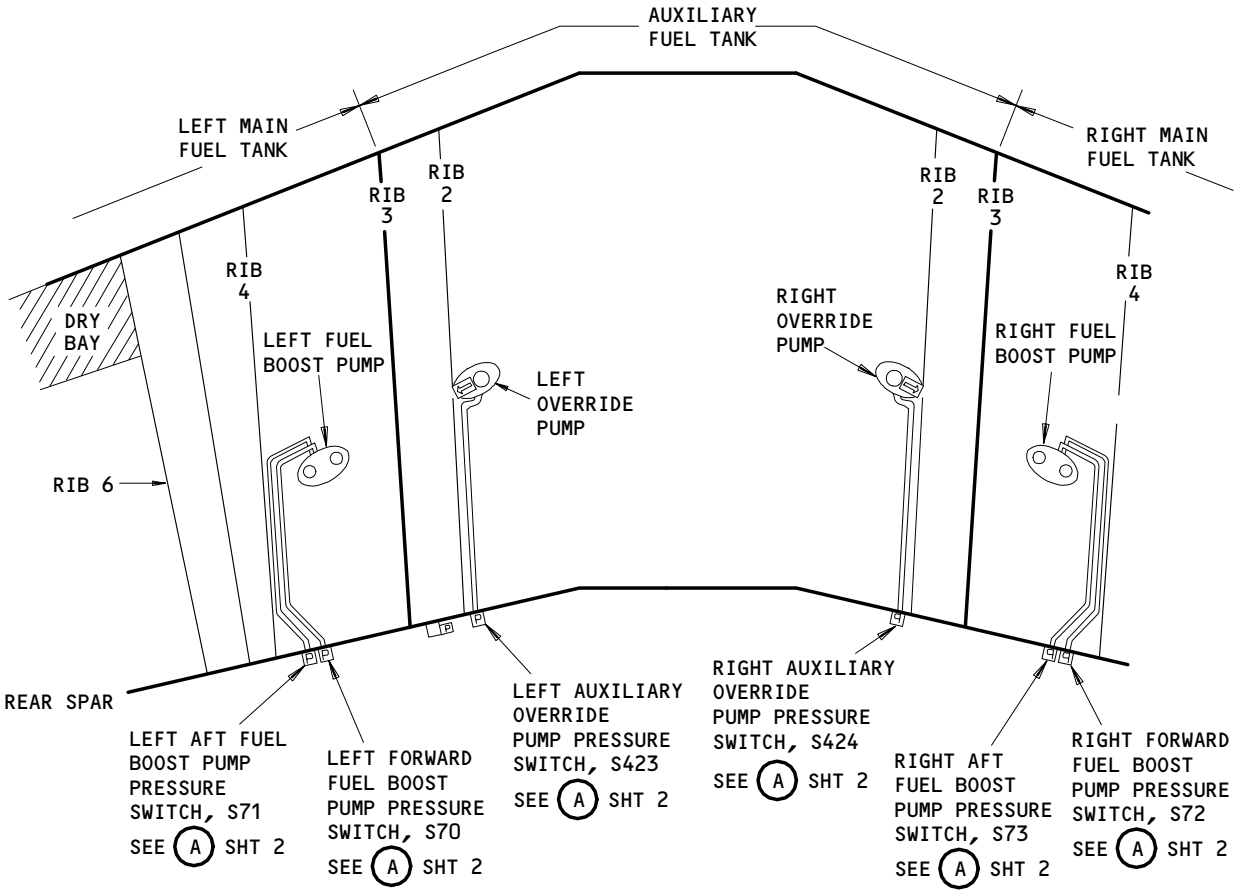

COMPONENT LOCATION 1

1 SAS 050,051,162-164 WITHOUT SB 28-25, AND SAS 150-154; MTH 275,276

2 SAS 050,051,162-164 WITH SB 28-25, AND SAS 052-149,155-161,165-999; MTH 277-999

Fuel Pressure Indicating System - Component Location
Figure 102 (Sheet 1)

BOEING PROPRIETARY - Copyright (C) - Unpublished Work - See title page for details.

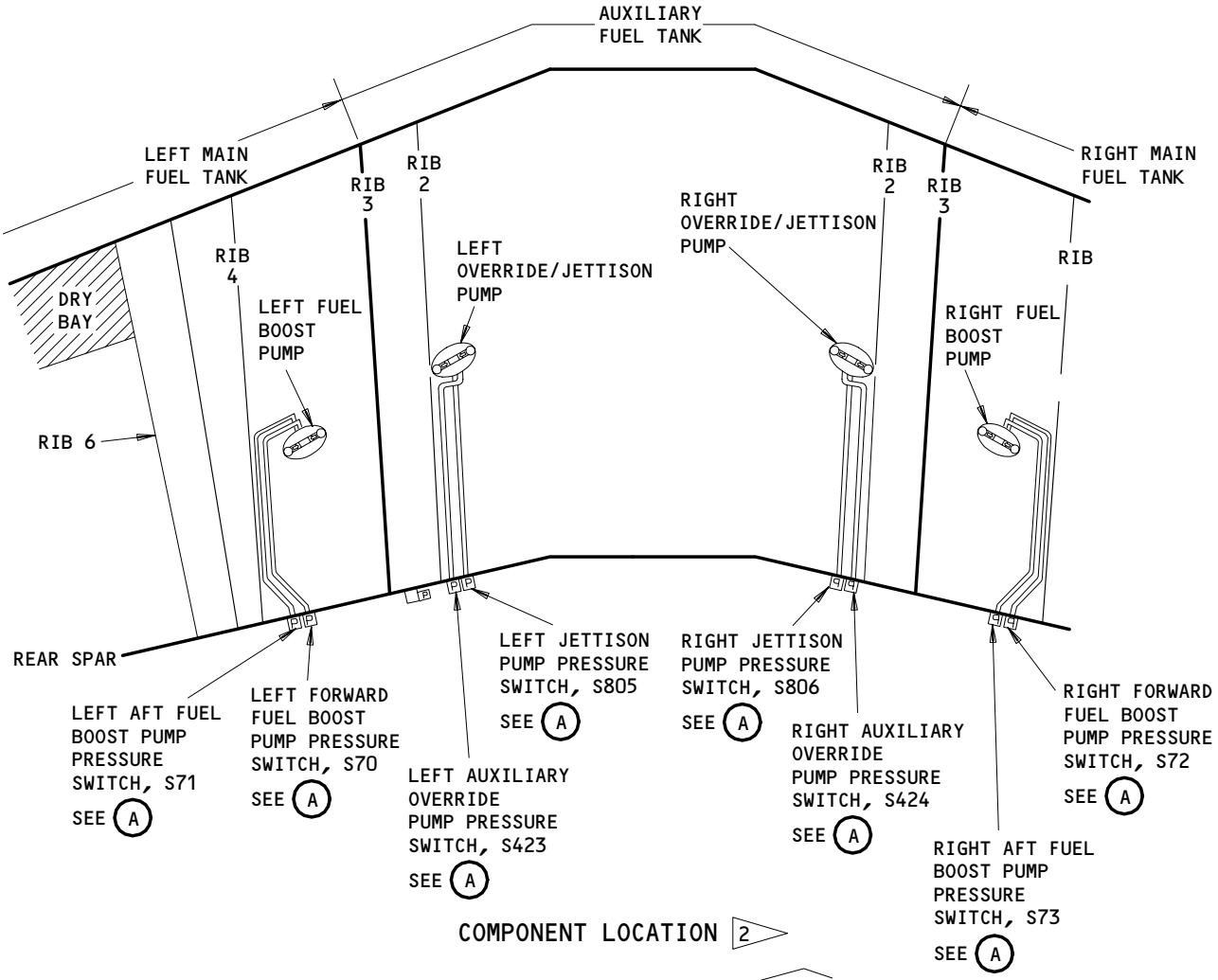

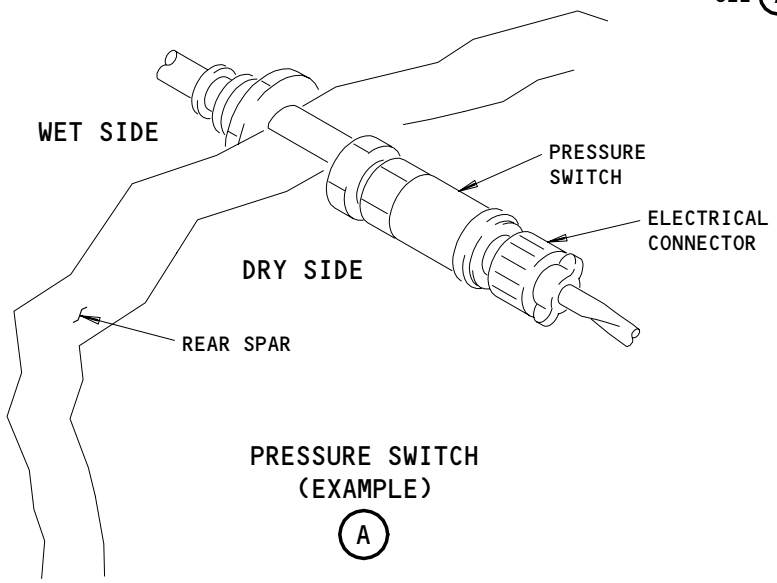

Fuel Pressure Indicating System - Component Location
Figure 102 (Sheet 2)

BOEING PROPRIETARY - Copyright (C) - Unpublished Work - See title page for details.

PRESSURE SWITCH - REMOVAL/INSTALLATION

1. General
   A. Six fuel pressure switches are installed on the aft face of the wing rear spar. Each pressure switch connects to a sense line from the applicable fuel boost pump or override pump.
   B. SAS 050, 051, 162-164 PRE-SB 28-25;
      SAS 150-154;
      MTH 275, 276;
      Six pressure switches are installed on the rear spar of the wings. Each pressure switch connects to a sense line from the applicable fuel boost pump or override pump.
   C. SAS 050, 051, 162-164 POST-SB 28-25;
      SAS 052-149, 155-161, 165-999;
      MTH 277-999;
      Eight pressure switches are installed on the rear spar of the wings. Each pressure switch connects to a sense line from the applicable fuel boost pump, override pump or jettison pump.
   D. The override/jettison pumps cannot be operated with less than 1000 pounds (453 kilograms) per AD 97-19-15. This restriction applies to airplanes that have one or more override/jettison pumps that have inlet diffusers attached by screws (P/N S343T002-5, -8, -12, -15). SB 28-52 and SB 28-62 replace these pumps with pumps that either have no diffusers or have a cast-in inlet diffuser. When all the pumps are replaced with new or modified pumps (P/N S343T002-23 or higher dash number) there is no minimum fuel restriction. Do not use JP4 or JET-B fuel after the new or modified override pump is installed.

TASK 28-42-01-004-001

2. Remove the Pressure Switch (Fig. 401)
   A. References
      (1) AMM 32-00-15/201, Landing Gear Door Locks
      (2) AMM 32-00-20/201, Landing Gear Downlocks
   B. Equipment
      (1) Container - Fuel Resistant 1 gallon
   C. Access
      (1) Location Zones
            551 Rear Spar to MLG Support Beam (Left)
            651 Rear Spar to MLG Support Beam (Right)

   D. Procedure

      S 864-003
      (1) For the pressure switches of the right aft or left forward fuel boost pumps or the left override pump, open this circuit breaker on the overhead circuit breaker panel, P11, and attach a DO-NOT-CLOSE tag:
         (a) 11R1, L IND LTS 1

BOEING PROPRIETARY - Copyright (C) - Unpublished Work - See title page for details.

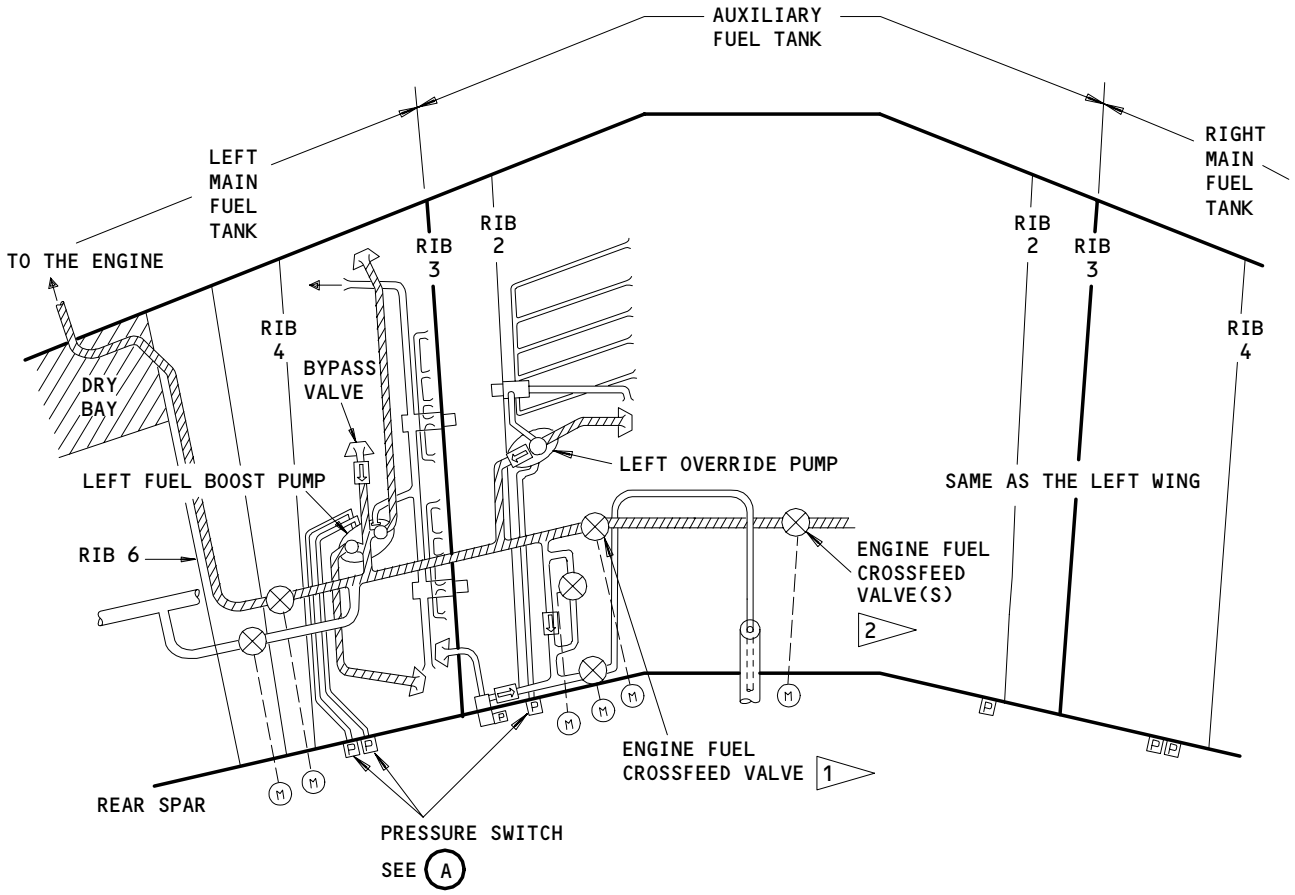

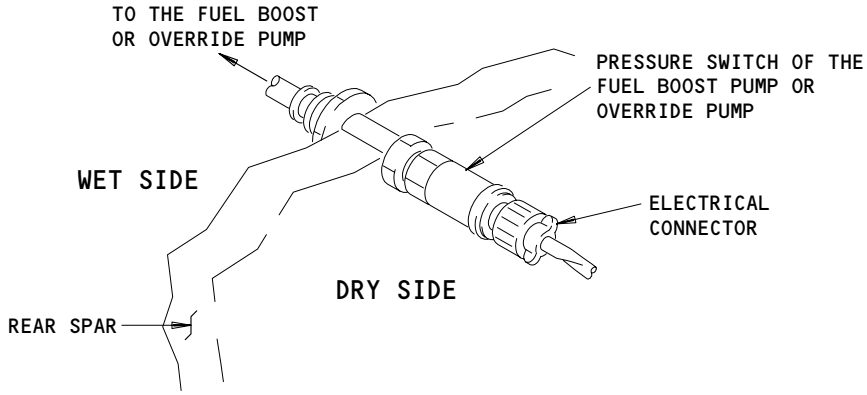

PRESSURE SWITCH

A

1 SAS 150-154 WITHOUT SB 28-34;
MTH 275,276 WITHOUT SB 28-34

2 SAS 150-154 WITH SB 28-34, AND
SAS 050,051,162-164 WITHOUT SB 28-25

Pressure Switch
Figure 401 (Sheet 1)

BOEING PROPRIETARY - Copyright (C) - Unpublished Work - See title page for details.

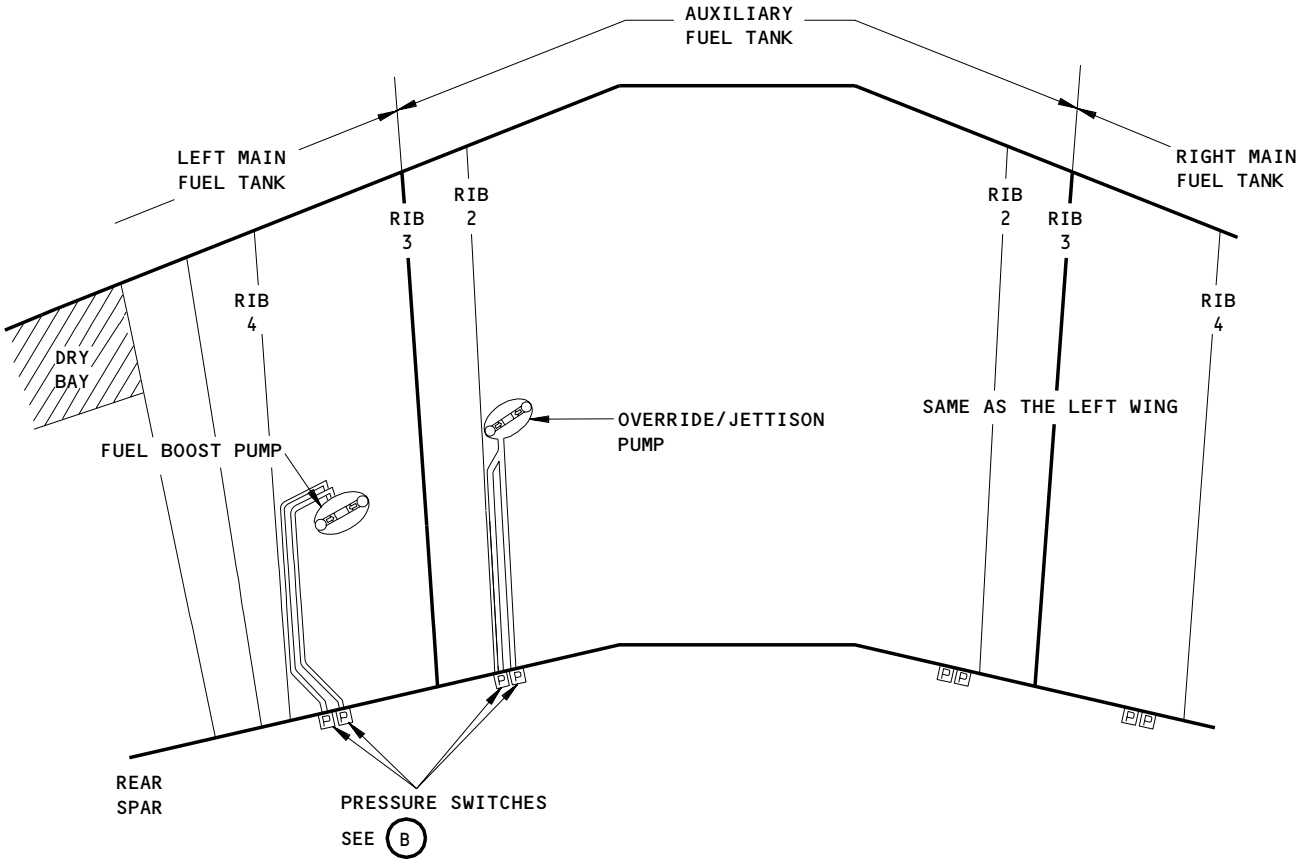

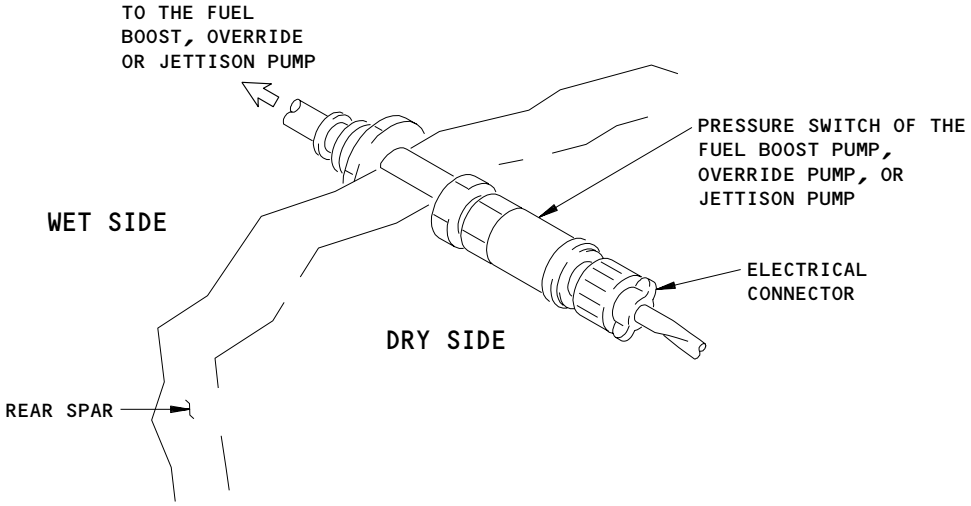

PRESSURE SWITCH

B

Pressure Switch
Figure 401 (Sheet 2)

BOEING PROPRIETARY - Copyright (C) - Unpublished Work - See title page for details.

S 864-002
(2) For the pressure switches of the left aft or right forward fuel boost pumps or the right override pump, open this circuit breaker on the overhead circuit breaker panel, P11, and attach a DO-NOT-CLOSE tag:
(a) 11R28, R IND LTS 1

S 864-063
(3) SAS 050, 051, 162-164 POST-SB 28-25;
SAS 052-149, 155-161, 166-999;
MTH 277-999;
Do these steps:
(a) For the pressure switch of the left jettison pump, open this circuit breaker on the overhead circuit breaker panel, P11, and attach a DO-NOT-CLOSE tag:
1) 11M13, LEFT JETT CONT
(b) For the pressure switch of the right jettison pump, open this circuit breaker on the overhead circuit breaker panel, P11, and attach a DO-NOT-CLOSE tag:
1) 11M22, RIGHT JETT CONT

S 214-055
(4) Make sure the downlocks are installed on the nose and main landing gear (AMM 32-00-20/201).

S 494-056

WARNING: USE THE PROCEDURE IN AMM 32-00-15/201 TO INSTALL THE DOOR LOCKS. THE DOORS OPEN AND CLOSE QUICKLY AND CAN CAUSE INJURY TO PERSONS OR DAMAGE TO EQUIPMENT.

(5) Open the doors for the landing gear and install the door locks (AMM 32-00-15/201).

S 014-057
(6) Get access to the pressure switch on the rear spar.

S 484-123
(7) Put the container and cotton wipers (BMS15-5) at the pressure switch.

S 034-006
(8) Disconnect the electrical connector from the pressure switch.

NOTE: Put tags on the electrical connector with the pressure switch number to make sure you install the correct electrical connector.

BOEING PROPRIETARY - Copyright (C) - Unpublished Work - See title page for details.

S 024-122

WARNING: BE CAREFUL WHEN YOU REMOVE THE PRESSURE SWITCH. IF YOU ARE NOT CAREFUL, FUEL CAN DRAIN FROM THE FUEL TANK.

(9) Remove the pressure switch.

S 034-016

(10) Discard the O-ring.

TASK 28-42-01-404-008

3. Install the Pressure Switch (Fig. 401)

A. References

(1) AMM 20-10-21/601, Electrical Bonding
(2) AMM 24-22-00/201, Electrical Power Control
(3) AMM 28-22-00/501, Engine Fuel Feed System
(4) AMM 28-31-00/501, Fuel Jettison System
(5) AMM 32-00-15/201, Landing Gear Door Locks

B. Equipment

(1) 1 gallon bucket, fuel resistant

C. Access

(1) Location Zones
551 Rear Spar to MLG Support Beam (Left)
651 Rear Spar to MLG Support Beam (Right)

D. Procedure

S 434-017

(1) Install a new O-ring in the groove on the pressure switch.

S 424-018

(2) Install the pressure switch on the sense line of the applicable pump.

S 424-019

(3) Tighten the pressure switch to a torque of 95-105 pound-inches.

NOTE: This torque value is satisfactory for all pressure switches. It is possible that the placard adjacent to the pressure switch gives a different torque for the pressure switch installation.

S 434-020

(4) Install the lockwire on the pressure switch.

S 224-021

(5) Make sure the bonding resistance between the pressure switch and the airplane structure is not more than 0.050 ohm (AMM 20-10-21/601).

BOEING PROPRIETARY - Copyright (C) - Unpublished Work - See title page for details.

S 434-022
(6) Connect the electrical connector to the pressure switch.

S 084-124
(7) Remove the bucket.

S 864-023
(8) For the pressure switch of the right aft or left forward fuel boost pump, or the left override pump, remove the DO-NOT-CLOSE tag and close this circuit breaker on the P11 panel:
(a) 11R1, L IND LTS 1

S 864-024
(9) For the pressure switch of the left aft or right forward fuel boost pump, or the right override pump, remove the DO-NOT-CLOSE tag and close this circuit breaker on the P11 panel:
(a) 11R28, R IND LTS 1

S 864-043
(10) SAS 050, 051, 162-164 POST-SB 28-25;
SAS 052-149, 155-161, 166-999;
MTH 277-999;
Do these steps:
(a) For the pressure switch of the left jettison pump, remove the DO-NOT-CLOSE tag and close this circuit breaker on the P11 panel:
1) 11M13, LEFT JETT CONT
(b) For the pressure switch of the right jettison pump, remove the DO-NOT-CLOSE tag and close this circuit breaker on the P11 panel:
1) 11M22, RIGHT JETT CONT

S 864-034
(11) Supply electrical power (AMM 24-22-00/201).

BOEING PROPRIETARY - Copyright (C) - Unpublished Work - See title page for details.

S 724-134
(12) OVERRIDE/JETTISON PUMPS WITH A DIFFUSER INSTALLED (PN S343T002-5,-8,-12,-15);
Do this step:

WARNING: DO NOT OPERATE THE OVERRIDE/JETTISON PUMPS IF THE FUEL QUANTITY IN THE AUXILIARY TANK IS BELOW 1000 POUNDS (453 KILOGRAMS). DRY FUEL PUMP OPERATION MAY CAUSE FUEL VAPORS IN THE TANK TO IGNITE DUE TO THE GENERATION OF SPARKS CAUSED BY METAL TO METAL CONTACT WITHIN THE FUEL PUMPS.

(a) Make sure there is a minimum fuel quantity of 1000 pounds (453 kilograms) in the auxiliary tank.

S 724-035
(13) For the pressure switches of the left or right override pump:
(a) Do a test on the override pumps and the pressure switches of the override pumps per the Test of the Auxiliary Tank Override Pumps and Pressure Switches procedure (AMM 28-22-00/501).

S 714-036
(14) For the pressure switch of the left aft fuel boost pump, do the steps that follow:

WARNING: DO NOT OPERATE A FUEL PUMP IF THE LOW PRESSURE LIGHT COMES ON AND STAYS ON. FUEL VAPORS IN THE TANK MAY IGNITE AND CAUSE A FIRE OR EXPLOSION.

(a) To operate any of the fuel pumps, you must be in the flight compartment to continuously monitor the fuel quantity and the low pressure indication in the fuel tank.
1) Immediately set the applicable fuel pump switch to OFF if the LOW PRESSURE light comes on and stays on.
(b) At the fuel management panel on the P5 panel, push the L AFT PUMP switch-light to the ON position.
(c) Make sure the PRESS light goes off and stays off after 15 seconds.
(d) Push the L AFT PUMP switch-light to the OFF position.

S 714-037
(15) For the pressure switch of the left forward boost pump, do the steps that follow:

BOEING PROPRIETARY - Copyright (C) - Unpublished Work - See title page for details.

WARNING: DO NOT OPERATE A FUEL PUMP IF THE LOW PRESSURE LIGHT COMES ON AND STAYS ON. FUEL VAPORS IN THE TANK MAY IGNITE AND CAUSE A FIRE OR EXPLOSION.

(a) To operate any of the fuel pumps, you must be in the flight compartment to continuously monitor the fuel quantity and the low pressure indication in the fuel tank.
  1) Immediately set the applicable fuel pump switch to OFF if the LOW PRESSURE light comes on and stays on.
(b) At the fuel management panel on the P5 panel, push the L FWD PUMP switch-light to the ON position.
(c) Make sure the PRESS light goes off and stays off after 15 seconds.
(d) Push the L FWD PUMP switch-light to the OFF position.

S 714-038
(16) For the pressure switch of the right aft fuel boost pump, do the steps that follow:

WARNING: DO NOT OPERATE A FUEL PUMP IF THE LOW PRESSURE LIGHT COMES ON AND STAYS ON. FUEL VAPORS IN THE TANK MAY IGNITE AND CAUSE A FIRE OR EXPLOSION.

(a) To operate any of the fuel pumps, you must be in the flight compartment to continuously monitor the fuel quantity and the low pressure indication in the fuel tank.
  1) Immediately set the applicable fuel pump switch to OFF if the LOW PRESSURE light comes on and stays on.
(b) At the fuel management panel on the P5 panel, push the R AFT PUMP switch-light to the ON position.
(c) Make sure the PRESS light goes off and stays off after 15 seconds.
(d) Push the R AFT PUMP switch-light to the OFF position.

S 714-039
(17) For the pressure switch of the right forward fuel boost pump, do the steps that follow:

WARNING: DO NOT OPERATE A FUEL PUMP IF THE LOW PRESSURE LIGHT COMES ON AND STAYS ON. FUEL VAPORS IN THE TANK MAY IGNITE AND CAUSE A FIRE OR EXPLOSION.

(a) To operate any of the fuel pumps, you must be in the flight compartment to continuously monitor the fuel quantity and the low pressure indication in the fuel tank.
  1) Immediately set the applicable fuel pump switch to OFF if the LOW PRESSURE light comes on and stays on.
(b) At the fuel management panel on the P5 panel, push the R FWD PUMP switch-light to the ON position.

BOEING PROPRIETARY - Copyright (C) - Unpublished Work - See title page for details.

(c) Make sure the PRESS light goes off and stays off after 15 seconds.
(d) Push the R FWD PUMP switch-light to the OFF position.

S 714-040
(18) SAS 050, 051, 162-164 POST-SB 28-25;
SAS 052-149, 155-161, 166-999;
MTH 277-999;
For the pressure switches on the left or right jettison pump, do the Test of the Pressure Switches of the Jettison System procedure (AMM 28-31-00/501).

S 094-058

WARNING: USE THE PROCEDURE IN AMM 32-00-15/201 TO INSTALL THE DOOR LOCKS. THE DOORS OPEN AND CLOSE QUICKLY AND CAN CAUSE INJURY TO PERSONS OR DAMAGE TO EQUIPMENT.

(19) Remove the door locks from the landing gear doors and close the doors (AMM 32-00-15/201).

S 864-041
(20) Remove electrical power if it is not necessary (AMM 24-22-00/201).

BOEING PROPRIETARY - Copyright (C) - Unpublished Work - See title page for details.

FUEL TEMPERATURE INDICATING SYSTEM - DESCRIPTION AND OPERATION

1. General (Fig. 1)
   A. The fuel temperature and indicating system measures the fuel temperature and supplies visual indication of the temperature on the overhead panel, P5. The system has a fuel tank sensor and a temperature indicator. Power is supplied to the system by the 28 volt dc left bus. Information displayed is used in conjunction with the fuel de-icing system when it may be advisable to use the fuel heater to prevent fuel icing at the fuel filter.
2. Component Details
   A. Fuel Temperature Sensor
      (1) The sensor is a bulb type with a temperature sensitive resistor. The resistance increases with increasing temperature. The fuel temperature sensor is found on the rear spar of the left main fuel tank. The bulb is installed in a housing so it can be replaced without draining fuel.
   B. Fuel Temperature Indicator
      (1) The fuel temperature indicator is a digital liquid crystal display (readout) on the fuel quantity indicator module. The module is installed on the overhead panel, P5.
3. Operation
   A. The sensor and lead resistance form two legs of an input bridge circuit. The resulting signal from the bridge circuit is amplified, converted from analog to digital, and shown as a digital readout.
   B. To do a test of the fuel temperature indicator, put the fuel quantity test switch on the P61 panel to FUEL QTY. The readout should show -185+/-2.

BOEING PROPRIETARY - Copyright (C) - Unpublished Work - See title page for details.

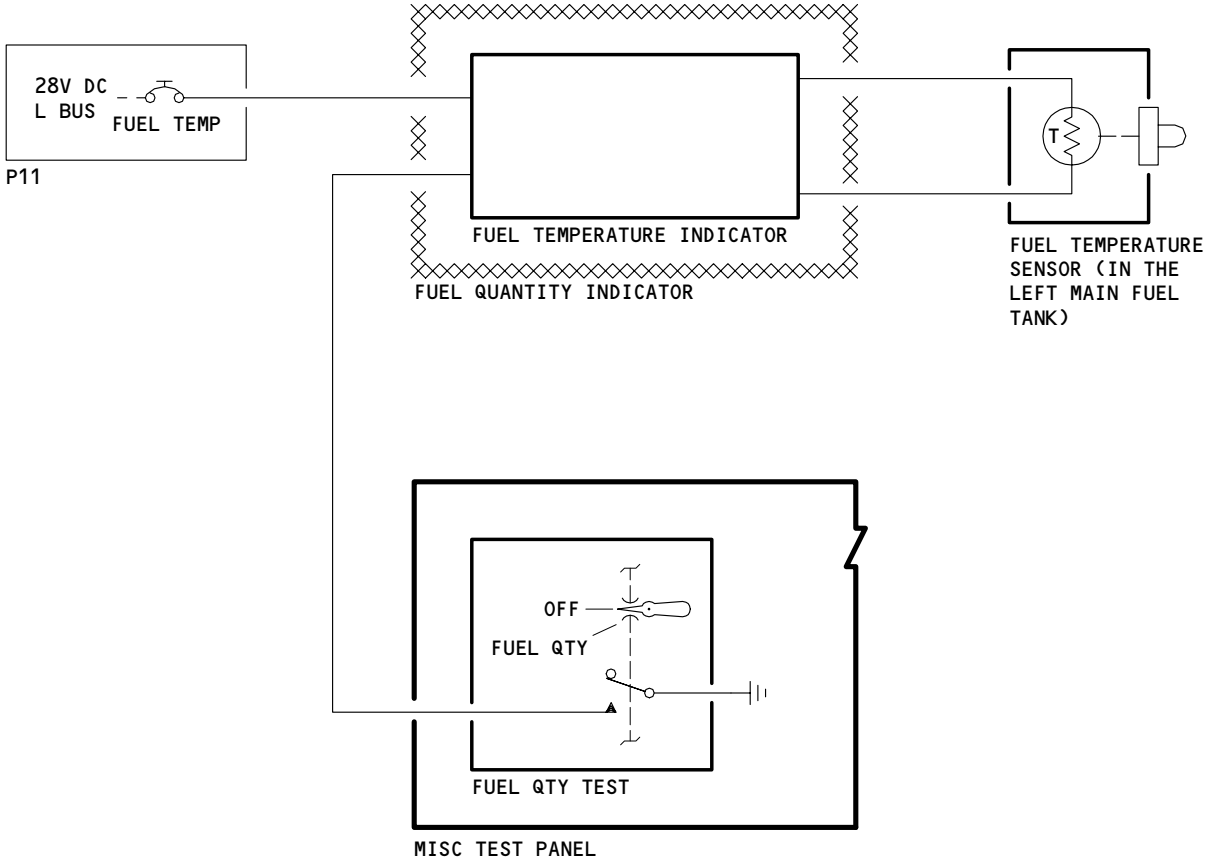

Fuel Temperature Indication Schematic
Figure 1

BOEING PROPRIETARY - Copyright (C) - Unpublished Work - See title page for details.

FUEL TEMPERATURE INDICATING SYSTEM - DESCRIPTION AND OPERATION

1. General (Fig. 1)
   A. The fuel temperature and indicating system measures the fuel temperature and supplies visual indication of the temperature on the overhead panel, P5. The system has a fuel tank sensor and a temperature indicator. Power is supplied to the system by the 28 volt dc left bus. Information shown is used in conjunction with the fuel de-icing system when it may be advisable to use the fuel heater to prevent fuel icing at the fuel filter.
2. Component Details
   A. Fuel Temperature Sensor
      (1) The sensor is a bulb type with a temperature sensitive resistor. The resistance increases with increasing temperature. The fuel temperature sensor is found on the rear spar of the left main fuel tank. The bulb is installed in a housing so it can be replaced without draining fuel.
   B. Fuel Temperature Indicator
      (1) The fuel temperature indicator is a digital liquid crystal display (readout) on the fuel quantity indicator module. The module is installed on the overhead panel, P5.
3. Operation
   A. The sensor and lead resistance form two legs of an input bridge circuit. The resulting signal from the bridge circuit is amplified, converted from analog to digital, and shown as a digital readout.
   B. To do a test of the indicator, set the fuel quantity test switch on the P61 panel to FUEL QTY. The display must show -188.

BOEING PROPRIETARY - Copyright (C) - Unpublished Work - See title page for details.

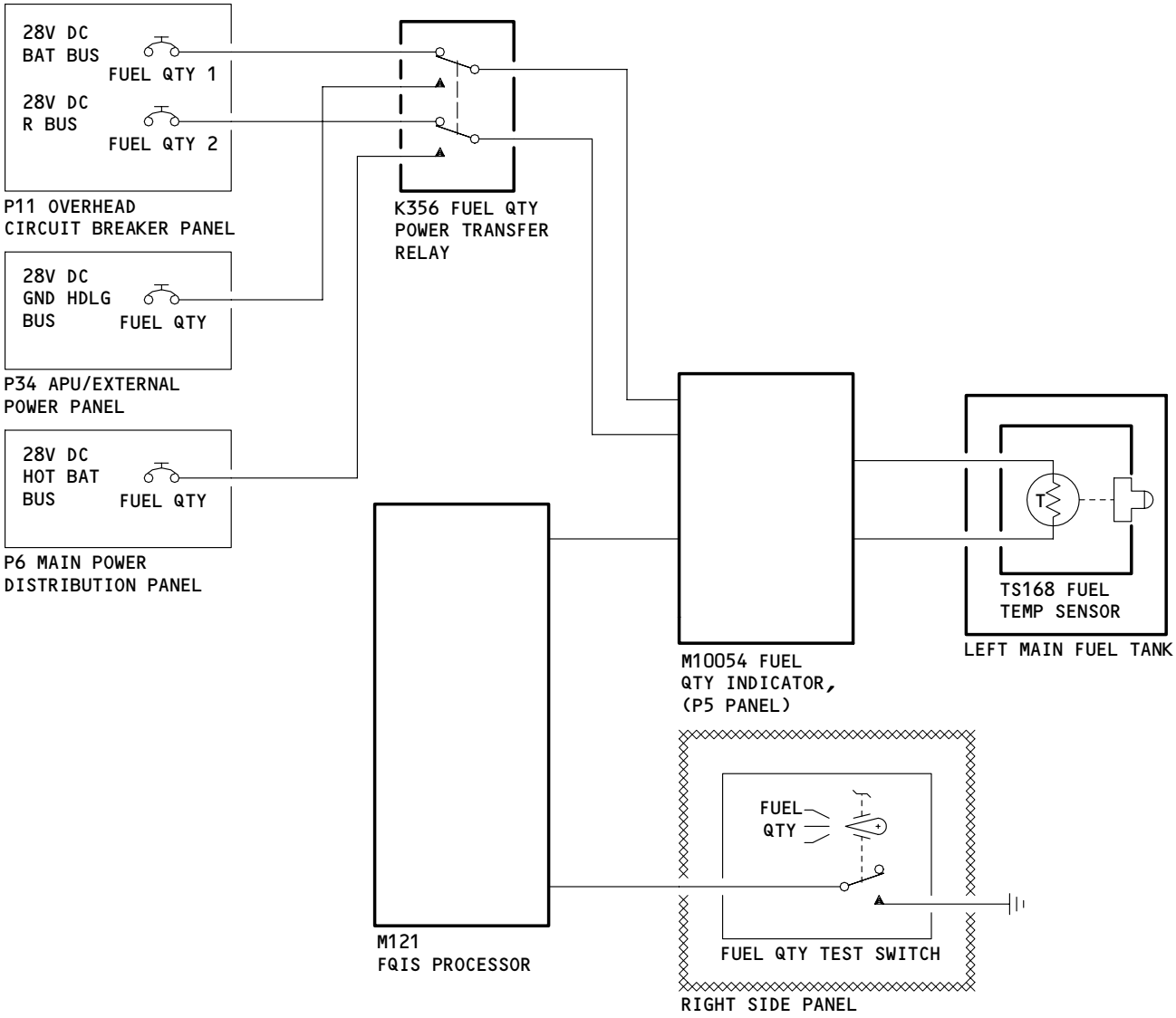

Fuel Temperature Indicating System Schematic
Figure 1

BOEING PROPRIETARY - Copyright (C) - Unpublished Work - See title page for details.

FUEL TEMPERATURE SYSTEM

COMPONENT	FIG. 102 SHT	QTY	ACCESS/AREA	AMM REFERENCE
CIRCUIT BREAKER -	2		FLT COMPT, P11	
FUEL TEMP, C1412		1	11M12	*
INDICATOR - (FIM 28-41-00/101)				
FUEL QUANTITY, M10054				
SENSOR - FUEL TEMPERATURE, TS168	1	1	551TB, L REAR SPAR	28-43-01

* SEE THE WDM EQUIPMENT LIST

Fuel Temperature System - Component Index
Figure 101

BOEING PROPRIETARY - Copyright (C) - Unpublished Work - See title page for details.

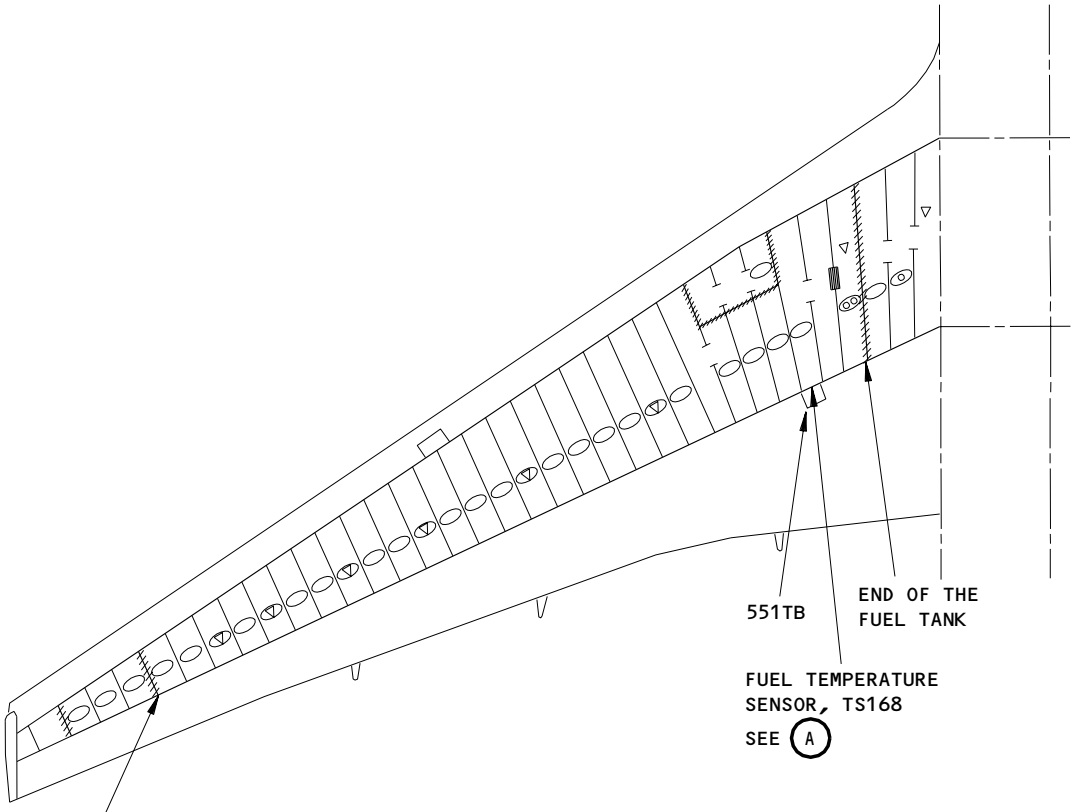

LEFT WING

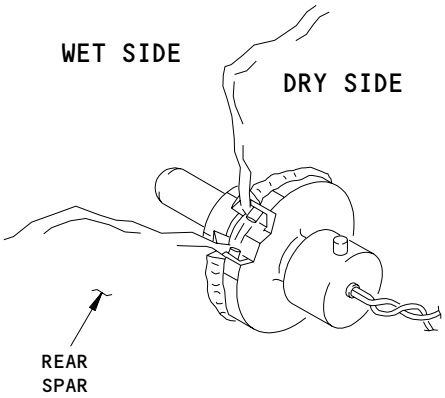

FUEL TEMPERATURE SENSOR, TS168

A

Fuel Temperature System - Component Location
Figure 102 (Sheet 1)

BOEING PROPRIETARY - Copyright (C) - Unpublished Work - See title page for details.

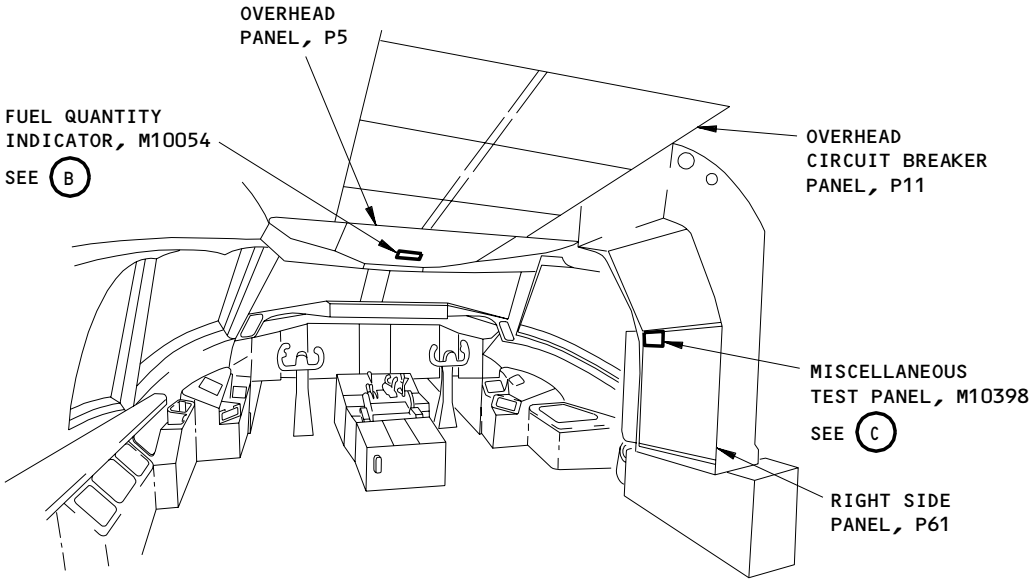

FLIGHT COMPARTMENT

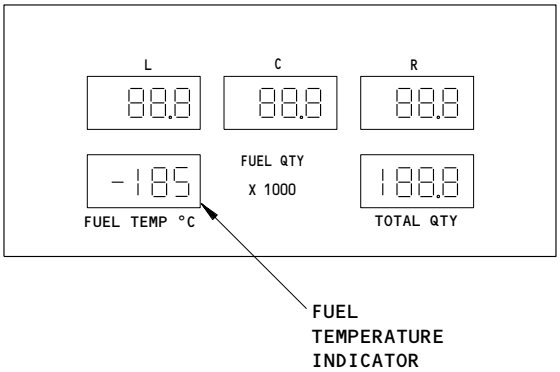

FUEL QUANTITY INDICATOR, M10054

B

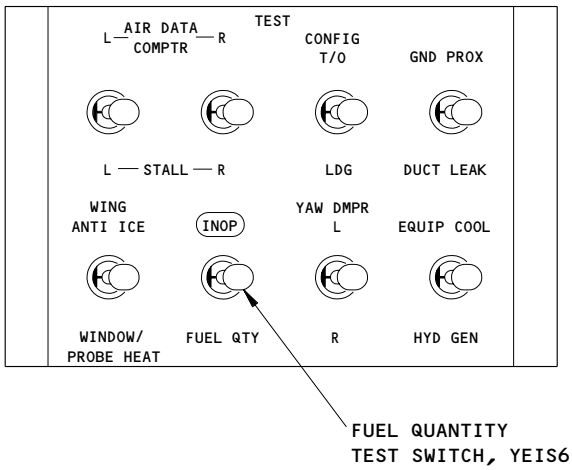

MISCELLANEOUS TEST PANEL, M10398

C

Fuel Temperature System - Component Location
Figure 102 (Sheet 2)

BOEING PROPRIETARY - Copyright (C) - Unpublished Work - See title page for details.

FUEL TEMPERATURE SYSTEM

COMPONENT	FIG. 102 SHT	QTY	ACCESS/AREA	AMM REFERENCE
CIRCUIT BREAKER -			FLT COMPT, P6	
FUELING QTY, C1045	--	1	6E4	*
CIRCUIT BREAKER -			FLT COMPT, P11	
FUEL QTY 1, C1048	--	1	11C34	*
FUEL QTY 2, C1053	--	1	11M19	*
CIRCUIT BREAKER -			FLT COMPT, P34	
FUEL QTY REFUEL, C1040	--	1	34L2	*
INDICATOR - (FIM 28-41-00/101)	2	1	FLT COMPT, P5	*
FUEL QUANTITY, M10054				
SENSOR - FUEL TEMPERATURE, TS168	1	1	551TB, LEFT REAR SPAR	28-43-01

* SEE THE WDM EQUIPMENT LIST

Fuel Temperature System - Component Index
Figure 101

BOEING PROPRIETARY - Copyright (C) - Unpublished Work - See title page for details.

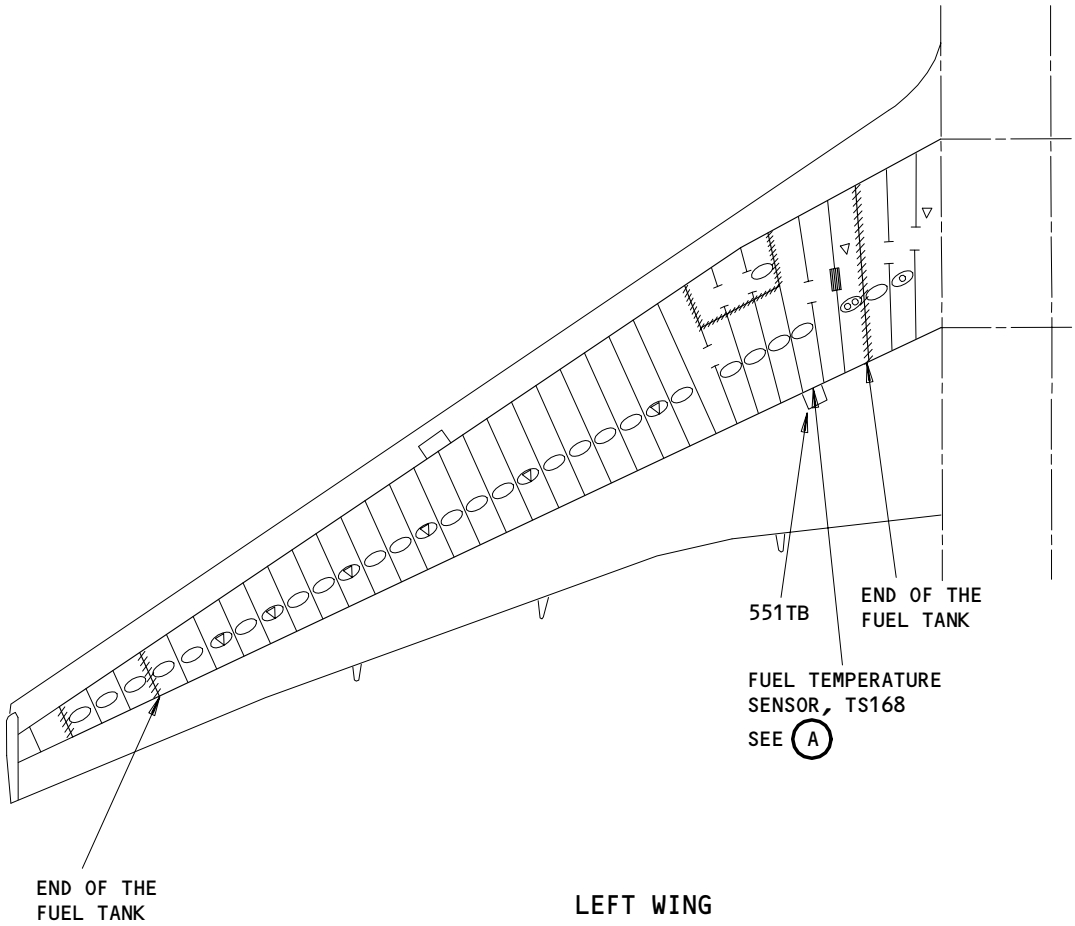

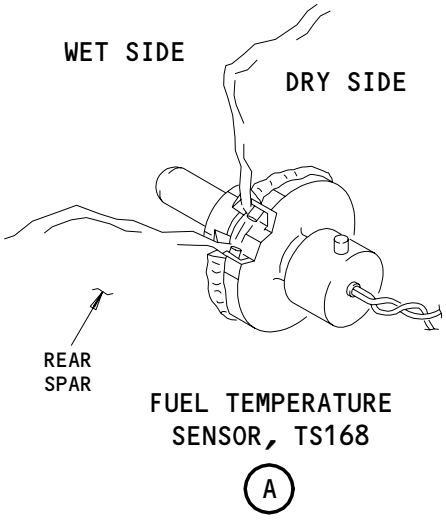

Fuel Temperature System - Component Location
Figure 102 (Sheet 1)

BOEING PROPRIETARY - Copyright (C) - Unpublished Work - See title page for details.

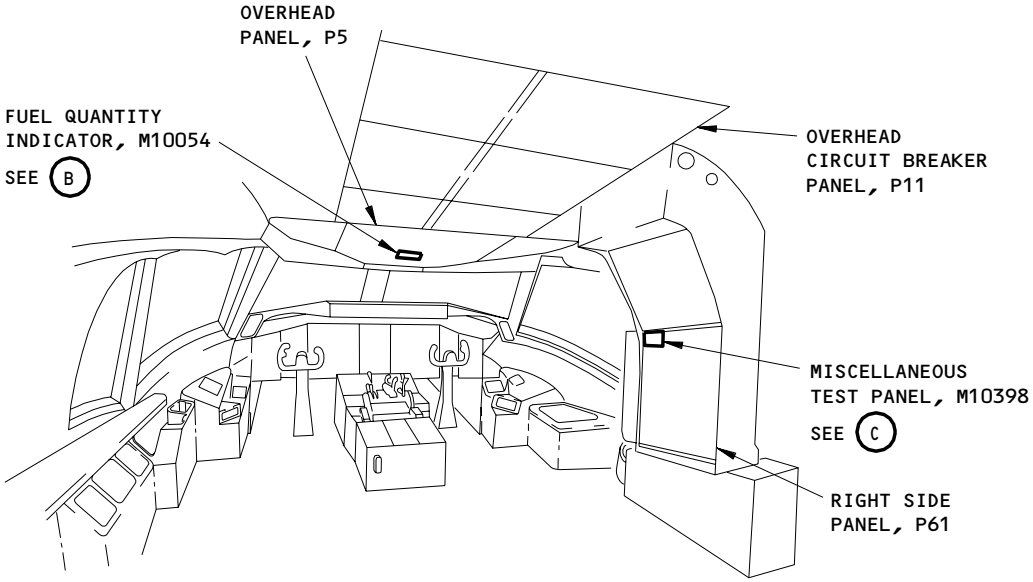

FLIGHT COMPARTMENT

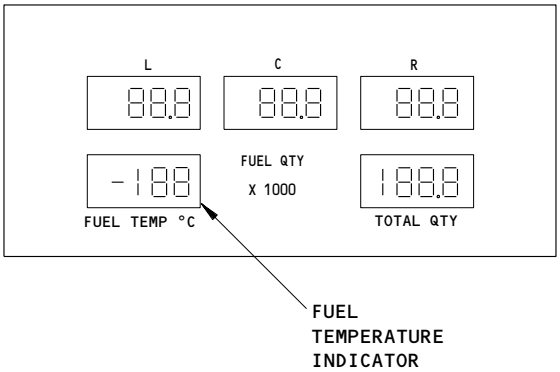

FUEL QUANTITY INDICATOR, M10054

B

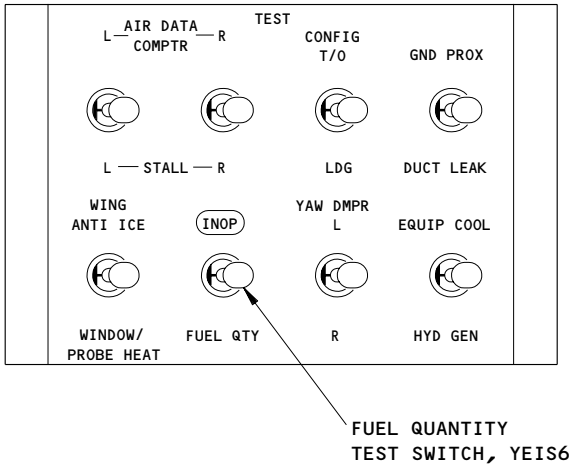

MISCELLANEOUS TEST PANEL, M10398

C

Fuel Temperature System - Component Location
Figure 102 (Sheet 2)

BOEING PROPRIETARY - Copyright (C) - Unpublished Work - See title page for details.

FUEL TEMPERATURE INDICATING SYSTEM - ADJUSTMENT/TEST

1. General
   A. This procedure contains two tasks for the fuel temperature indicating system:
      (1) The first task is an ambient temperature operational test which does a check to make sure the fuel temperature indicating system operates in ambient temperature.
      (2) The second task is a cold weather operational test which does a check to make sure the fuel temperature indicating system operates in very cold temperatures.

TASK 28-43-00-715-001-001

2. Fuel Temperature Indication System Ambient Temperature Operational Test
   A. Equipment
      (1) Container, 1/2 gallon (2 liter) capacity
      (2) Thermometer - mercury
   B. References
      (1) AMM 28-43-01/401, Fuel Temperature Sensor
   C. Access
      (1) Location Zone
          551 Rear Spar to MLG Support Beam (Left)

      (2) Access Panel
          551TB Trailing Edge Skin Panel (Left)

   D. Procedure

      S 025-002-001
      (1) Remove the fuel temperature sensor from the No. 1 main tank (AMM 28-43-01/401).

      NOTE: Do not disconnect the fuel temperature sensor from the airplane wiring for this test.

      S 865-003-001
      (2) Make sure this circuit breaker is closed:
          (a) On the overhead circuit breaker panel, P11:
              1) 11M12, FUEL TEMP

BOEING PROPRIETARY - Copyright (C) - Unpublished Work - See title page for details.

S 485-004-001
(3) Fill the container with water.

NOTE: The water must approximately be at ambient temperature. The specific water temperature is not important for this procedure.

S 485-005-001
(4) At the same time, put the fuel temperature bulb and the mercury thermometer into the water.

S 215-006-001
(5) Look at the mercury thermometer temperature.

S 215-007-001
(6) Compare the temperature on the mercury thermometer with the temperature shown on the main EICAS display.

S 975-008-001
(7) Make sure the temperature shown on the main EICAS display is in ± 4°C the temperature shown on the mercury thermometer.

S 425-009-001
(8) Install the fuel temperature sensor (AMM 28-43-01/401).

TASK 28-43-00-715-010-001
3. Fuel Temperature Indicating System Cold Weather Operational Test
A. Equipment
(1) Container, 1/2 gallon (2 liter) capacity, suitable for antifreeze/dry ice mixture
(2) Thermometer - Mercury, -30 F (-40 C) capability
B. Consumable Materials
(1) G00065 Antifreeze - Ethylene Glycol
(2) G00263 Dry Ice
C. References
(1) AMM 28-43-01/401, Fuel Temperature Sensor
D. Access
(1) Location Zone
551 Rear Spar to MLG Support Beam (Left)

(2) Access Panel
551TB Trailing Edge Skin Panel (Left)

BOEING PROPRIETARY - Copyright (C) - Unpublished Work - See title page for details.

E. Procedure

S 025-011-001
(1) Remove the fuel temperature sensor from the No. 1 main tank (AMM 28-43-01/401).

NOTE: Do not disconnect the fuel temperature sensor from the airplane wiring for this test.

S 865-012-001
(2) Make sure this circuit breaker is closed:
(a) On the overhead circuit breaker panel, P11:
1) 11M12, FUEL TEMP

S 865-013-001
(3) Slowly add the small pieces of dry ice to approximately one quart of ethylene glycol (anti-freeze) in an applicable container.

S 485-014-001
(4) While the same time, put the fuel temperature bulb and the mercury thermometer into the ethylene glycol and dry ice mixture.

S 215-015-001

CAUTION: MONITOR THE TEMPERATURE OF THE MIXTURE. ETHYLENE GLYCOL BECOMES SOLID (FREEZES) AT APPROXIMATELY -40°F (-40°C). DAMAGE TO THE EQUIPMENT COULD OCCUR IF THE ETHYLENE GLYCOL BECOMES SOLID (FREEZES).

(5) As the temperature on the mercury thermometer shows -22°F (-30°C), compare the temperature of the mercury thermometer to the temperature shown on the main EICAS display.

S 975-016-001
(6) Make sure the temperature shown on the main EICAS display is in ± 4°C the temperature shown on the mercury thermometer.

S 425-017-001
(7) Install the fuel temperature sensor (AMM 28-43-01/401).

BOEING PROPRIETARY - Copyright (C) - Unpublished Work - See title page for details.

TASK 28-43-00-715-018-001

4. Fuel Temperature Bulb Resistance Test

A. Equipment

(1) Thermometer - Mercury Type, calibrated in °C, to compare with the temperature indicator

(2) Ohmmeter

B. References

(1) WDM 28-43-11

C. Access

(1) Location Zones

551 Rear Spar to MLG Support Beam (Left)

(2) Access Panels

551TB Trailing Edge Skin Panel (Left)

D. Procedure

S 865-019-001

(1) Open these circuit breakers and attach DO-NOT-CLOSE tags:

(a) On the overhead circuit breaker panel, P11:

1) 11C34, FUEL QTY NO. 1

2) 11M19, FUEL QTY NO. 2

3) 11M12, FUEL TEMP

(b) On the main power distribution panel, P6:

1) 6E4, FUELING QTY

(c) On the APU/external power panel, P34:

1) 34L2, FUEL QTY REFUEL

S 035-020-001

(2) Remove the fuel temperature bulb from the adapter but do not disconnect it (AMM 28-43-01/401).

NOTE: The fuel temperature bulb is on the rear spar of the left main fuel tank.

S 975-021-001

(3) Measure the temperature in the bulb housing.

(a) Put the thermometer in the bulb housing.

(b) Permit the temperature to become stable.

(c) Write the temperature shown on the thermometer.

S 035-022-001

(4) Disconnect connector D3896 from the fuel quantity indicating module in the flight compartment (WDM 28-43-11).

S 975-023-001

(5) Measure the resistance from pin 12 to pin 13 on connector D3896.

BOEING PROPRIETARY - Copyright (C) - Unpublished Work - See title page for details.

S 975-024-001

(6) Use Table 501 to compare the resistance measurement with the temperature of the sensor.

NOTE: The resistance measured by this procedure includes the resistance of the wiring between the indicator and the sensor, approximately 0.8 ohms for 100 feet of wiring.

Temperature-Resistance Values for Temperature Sensor, T434
Table 501

TEMPERATURE (degrees Celsius)	RESISTANCE (ohms)
-30	80.56 ±0.40
-20	83.77 ±0.40
-10	87.04 ±0.40
0	90.38 ±0.40
10	93.80 ±0.40
20	97.31 ±0.40
30	100.91 ±0.40
40	104.60 ±0.40
50	108.39 ±0.40
60	112.28 ±0.50

S 435-025-001

(7) Connect connector D3896 to the fuel temperature indicator in the flight compartment again (WDM 28-43-11).

S 435-026-001

(8) Install the temperature bulb in the adapter again (AMM 28-43-01/401).

S 865-027-001

(9) Close these circuit breakers and remove the DO-NOT-CLOSE tags:
(a) On the overhead circuit breaker panel, P11:
1) 11C34, FUEL QTY NO. 1
2) 11M19, FUEL QTY NO. 2
3) 11M12, FUEL TEMP

BOEING PROPRIETARY - Copyright (C) - Unpublished Work - See title page for details.

(b) On the main power distribution panel, P6:
  1) 6E4, FUELING QTY
(c) On the APU/external power panel, P34:
  1) 34L2, FUEL QTY REFUEL

BOEING PROPRIETARY - Copyright (C) - Unpublished Work - See title page for details.

FUEL TEMPERATURE INDICATING SYSTEM - ADJUSTMENT/TEST

1. General
   A. This procedure contains two tasks for the fuel temperature indicating system:
      (1) The first task is an ambient temperature operational test which does a check to make sure the fuel temperature indicating system operates in ambient temperature.
      (2) The second task is a cold weather operational test which does a check to make sure the fuel temperature indicating system operates in very cold temperatures.

TASK 28-43-00-715-001-002

2. Fuel Temperature Indication System Ambient Temperature Operational Test
   A. Equipment
      (1) Container, 1/2 gallon (2 liter) capacity
      (2) Thermometer - mercury
   B. References
      (1) AMM 28-43-01/401, Fuel Temperature Sensor
   C. Access
      (1) Location Zone
          551 Rear Spar to MLG Support Beam (Left)

      (2) Access Panel
          551TB Trailing Edge Skin Panel (Left)

   D. Procedure

      S 025-002-002
      (1) Remove the fuel temperature sensor from the No. 1 main tank (AMM 28-43-01/401).

          NOTE: Do not disconnect the fuel temperature sensor from the airplane wiring for this test.

      S 865-003-002
      (2) Make sure these circuit breakers are closed:
          (a) On the overhead circuit breaker panel, P11:
              1) 11C34, FUEL QTY NO. 1
              2) 11M19, FUEL QTY NO. 2
          (b) On the main power distribution panel, P6:
              1) 6E4, FUELING QTY
          (c) On the APU/external power panel, P34:
              1) 34L2, FUEL QTY REFUEL

BOEING PROPRIETARY - Copyright (C) - Unpublished Work - See title page for details.

S 485-004-002
(3) Fill the container with water.

NOTE: The water must approximately be at ambient temperature. The specific water temperature is not important for this procedure.

S 485-005-002
(4) At the same time, put the fuel temperature bulb and the mercury thermometer into the water.

S 215-006-002
(5) Look at the mercury thermometer temperature.

S 215-007-002
(6) Compare the temperature on the mercury thermometer with the temperature shown on the main EICAS display.

S 975-008-002
(7) Make sure the temperature shown on the main EICAS display is in ± 4°C the temperature shown on the mercury thermometer.

S 425-009-002
(8) Install the fuel temperature sensor (AMM 28-43-01/401).

TASK 28-43-00-715-010-002
3. Fuel Temperature Indicating System Cold Weather Operational Test
A. Equipment
(1) Container, 1/2 gallon (2 liter) capacity, suitable for antifreeze/dry ice mixture
(2) Thermometer - Mercury, -30 F (-40 C) capability
B. Consumable Materials
(1) G00065 Antifreeze - Ethylene Glycol
(2) G00263 Dry Ice
C. References
(1) AMM 28-43-01/401, Fuel Temperature Sensor
D. Access
(1) Location Zone
551 Rear Spar to MLG Support Beam (Left)

(2) Access Panel
551TB Trailing Edge Skin Panel (Left)

BOEING PROPRIETARY - Copyright (C) - Unpublished Work - See title page for details.

E. Procedure

S 025-011-002
(1) Remove the fuel temperature sensor from the No. 1 main tank (AMM 28-43-01/401).

NOTE: Do not disconnect the fuel temperature sensor from the airplane wiring for this test.

S 865-012-002
(2) Make sure these circuit breakers are closed:
(a) On the overhead circuit breaker panel, P11:
1) 11C34, FUEL QTY NO. 1
2) 11M19, FUEL QTY NO. 2
(b) On the main power distribution panel, P6:
1) 6E4, FUELING QTY
(c) On the APU/external power panel, P34:
1) 34L2, FUEL QTY REFUEL

S 865-013-002
(3) Slowly add the small pieces of dry ice to approximately one quart of ethylene glycol (anti-freeze) in an applicable container.

S 485-014-002
(4) While the same time, put the fuel temperature bulb and the mercury thermometer into the ethylene glycol and dry ice mixture.

S 215-015-002

CAUTION: MONITOR THE TEMPERATURE OF THE MIXTURE. ETHYLENE GLYCOL BECOMES SOLID (FREEZES) AT APPROXIMATELY -40°F (-40°C). DAMAGE TO THE EQUIPMENT COULD OCCUR IF THE ETHYLENE GLYCOL BECOMES SOLID (FREEZES).

(5) As the temperature on the mercury thermometer shows -22°F (-30°C), compare the temperature of the mercury thermometer to the temperature shown on the main EICAS display.

S 975-016-002
(6) Make sure the temperature shown on the main EICAS display is in ± 4°C the temperature shown on the mercury thermometer.

S 425-017-002
(7) Install the fuel temperature sensor (AMM 28-43-01/401).

BOEING PROPRIETARY - Copyright (C) - Unpublished Work - See title page for details.

TASK 28-43-00-715-018-002

4. Fuel Temperature Bulb Resistance Test

A. Equipment

(1) Thermometer - Mercury Type, calibrated in °C, to compare with the temperature indicator

(2) Ohmmeter

B. References

(1) WDM 28-43-11

C. Access

(1) Location Zones

551 Rear Spar to MLG Support Beam (Left)

(2) Access Panels

551TB Trailing Edge Skin Panel (Left)

D. Procedure

S 865-019-002

(1) Open these circuit breakers and attach DO-NOT-CLOSE tags:

(a) On the overhead circuit breaker panel, P11:

1) 11C34, FUEL QTY NO. 1

2) 11M19, FUEL QTY NO. 2

(b) On the main power distribution panel, P6:

1) 6E4, FUELING QTY

(c) On the APU/external power panel, P34:

1) 34L2, FUEL QTY REFUEL

S 035-020-002

(2) Remove the fuel temperature bulb from the adapter but do not disconnect it (AMM 28-43-01/401).

NOTE: The fuel temperature bulb is on the rear spar of the left main fuel tank.

S 975-021-002

(3) Measure the temperature in the bulb housing.

(a) Put the thermometer in the bulb housing.

(b) Permit the temperature to become stable.

(c) Write the temperature shown on the thermometer.

S 035-022-002

(4) Disconnect connector D3900 from the fuel quantity indicating module in the flight compartment (WDM 28-43-11).

S 975-023-002

(5) Measure the resistance from pin 8 to pin 9 on connector D3900.

BOEING PROPRIETARY - Copyright (C) - Unpublished Work - See title page for details.

S 975-024-002
(6) Use Table 501 to compare the resistance measurement with the temperature of the sensor.

NOTE: The resistance measured by this procedure includes the resistance of the wiring between the indicator and the sensor, approximately 0.8 ohms for 100 feet of wiring.

Temperature-Resistance Values for Temperature Sensor, T434
Table 501

TEMPERATURE (degrees Celsius)	RESISTANCE (ohms)
-30	80.56 ±0.40
-20	83.77 ±0.40
-10	87.04 ±0.40
0	90.38 ±0.40
10	93.80 ±0.40
20	97.31 ±0.40
30	100.91 ±0.40
40	104.60 ±0.40
50	108.39 ±0.40
60	112.28 ±0.50

S 435-025-002
(7) Connect connector D3900 to the fuel temperature indicator in the flight compartment again (WDM 28-43-11).

S 435-026-002
(8) Install the temperature bulb in the adapter again (AMM 28-43-01/401).

S 865-027-002
(9) Close these circuit breakers and remove the DO-NOT-CLOSE tags:
(a) On the overhead circuit breaker panel, P11:
1) 11C34, FUEL QTY NO. 1

BOEING PROPRIETARY - Copyright (C) - Unpublished Work - See title page for details.

2) 11M19, FUEL QTY NO. 2

(b) On the main power distribution panel, P6:

1) 6E4, FUELING QTY

(c) On the APU/external power panel, P34:

1) 34L2, FUEL QTY REFUEL

BOEING PROPRIETARY - Copyright (C) - Unpublished Work - See title page for details.

FUEL TEMPERATURE SENSOR - REMOVAL/INSTALLATION

1. General
   A. The fuel temperature sensor is installed in an adapter on the rear spar of the left main fuel tank. The adapter is not removed.
   B. This procedure contains two tasks. The first task removes the fuel temperature sensor. The second task installs the fuel temperature sensor.

TASK 28-43-01-004-001-001

2. Remove the Fuel Temperature Sensor (Fig. 401)
   A. References
      (1) AMM 06-44-00/201, Wings (Major Zones 500 and 600) Access Doors and Panels
   B. Access
      (1) Location Zones
          551 Rear Spar to MLG Support Beam (Left)

      (2) Access Panels
          551TB Trailing Edge Skin Panel (Left)

   C. Procedure

      S 864-016-001
      (1) Open this circuit breaker and attach a DO-NOT-CLOSE tag:
          (a) On the overhead circuit breaker panel, P11:
              1) 11M12, FUEL TEMP

      S 014-047-001
      (2) Remove the trailing edge skin panel, 551TB, on the lower surface of the wing (AMM 06-44-00/201).

      S 034-048-001
      (3) Disconnect the leads of the fuel temperature sensor from the airplane leads at the splice.

      S 024-049-001
      (4) Remove the fuel temperature sensor from the adapter.

TASK 28-43-01-404-050-001

3. Install the Fuel Temperature Sensor (Fig. 401)
   A. References
      (1) AMM 06-44-00/201, Wings (Major Zones 500 and 600) Access Doors and Panels
      (2) AMM 20-10-21/601, Electrical Bonding

BOEING PROPRIETARY - Copyright (C) - Unpublished Work - See title page for details.

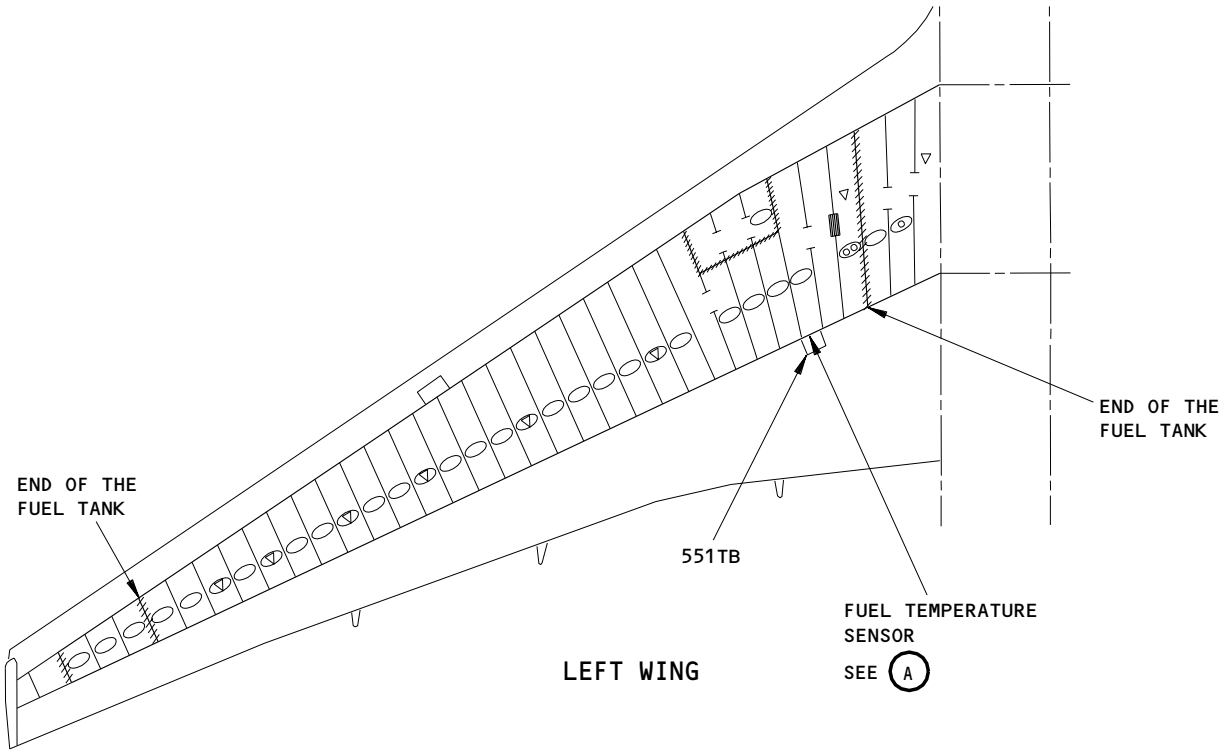

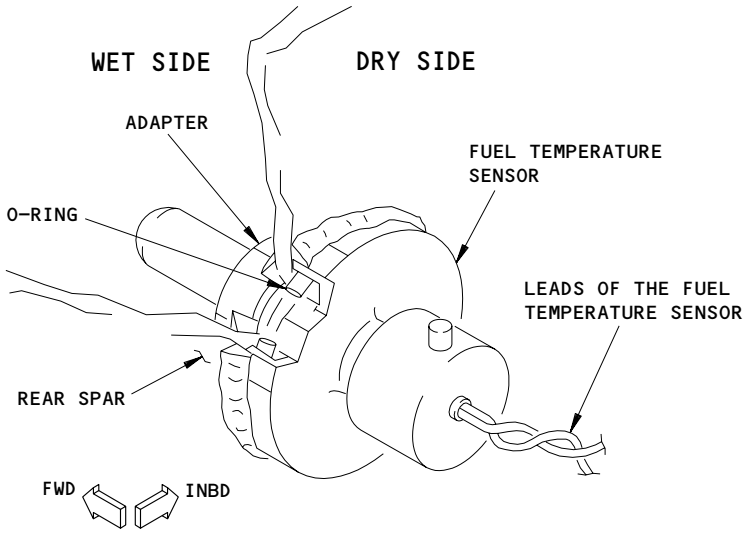

FUEL TEMPERATURE SENSOR

A

Fuel Temperature Sensor Installation
Figure 401

BOEING PROPRIETARY - Copyright (C) - Unpublished Work - See title page for details.

B. Access

(1) Location Zones

551 Rear Spar to MLG Support Beam (Left)

(2) Access Panels

551TB Trailing Edge Skin Panel (Left)

C. Procedure

S 424-051-001

(1) Install the fuel temperature sensor into the adapter.

S 434-052-001

(2) Connect the leads of the fuel temperature sensor to the airplane leads.

S 224-053-001

(3) Make sure the bonding resistance between the fuel temperature sensor and the airplane structure is not more than 0.01 ohm (AMM 20-10-21/601).

S 414-054-001

(4) Install the trailing edge skin panel, 551TB (AMM 06-44-00/201).

S 864-067-001

(5) Remove the DO-NOT-CLOSE tag and close this circuit breaker:

(a) On the overhead circuit breaker panel, P11:

1) 11M12, FUEL TEMP

BOEING PROPRIETARY - Copyright (C) - Unpublished Work - See title page for details.

FUEL TEMPERATURE SENSOR - REMOVAL/INSTALLATION

1. General
   A. The fuel temperature sensor is installed in an adapter on the rear spar of the left main fuel tank. The adapter is not removed.
   B. This procedure contains two tasks. The first task removes the fuel temperature sensor. The second task installs the fuel temperature sensor.

TASK 28-43-01-004-001-002

2. Remove the Fuel Temperature Sensor (Fig. 401)
   A. References
      (1) AMM 06-44-00/201, Wings (Major Zones 500 and 600) Access Doors and Panels
   B. Access
      (1) Location Zones
          551 Rear Spar to MLG Support Beam (Left)

      (2) Access Panels
          551TB Trailing Edge Skin Panel (Left)

   C. Procedure

S 864-094-002
(1) Open these circuit breakers and attach a DO-NOT-CLOSE tag:
    (a) On the overhead circuit breaker panel, P11:
        1) 11C34, FUEL QTY NO. 1
        2) 11M19, FUEL QTY NO. 2
    (b) On the main power distribution panel, P6:
        1) 6E4, FUELING QTY
    (c) On the APU/external power panel, P34:
        1) 34L2, FUEL QTY REFUEL

S 014-047-002
(2) Remove the trailing edge skin panel, 551TB, on the lower surface of the wing (AMM 06-44-00/201).

S 034-048-002
(3) Disconnect the leads of the fuel temperature sensor from the airplane leads at the splice.

S 024-049-002
(4) Remove the fuel temperature sensor from the adapter.

BOEING PROPRIETARY - Copyright (C) - Unpublished Work - See title page for details.

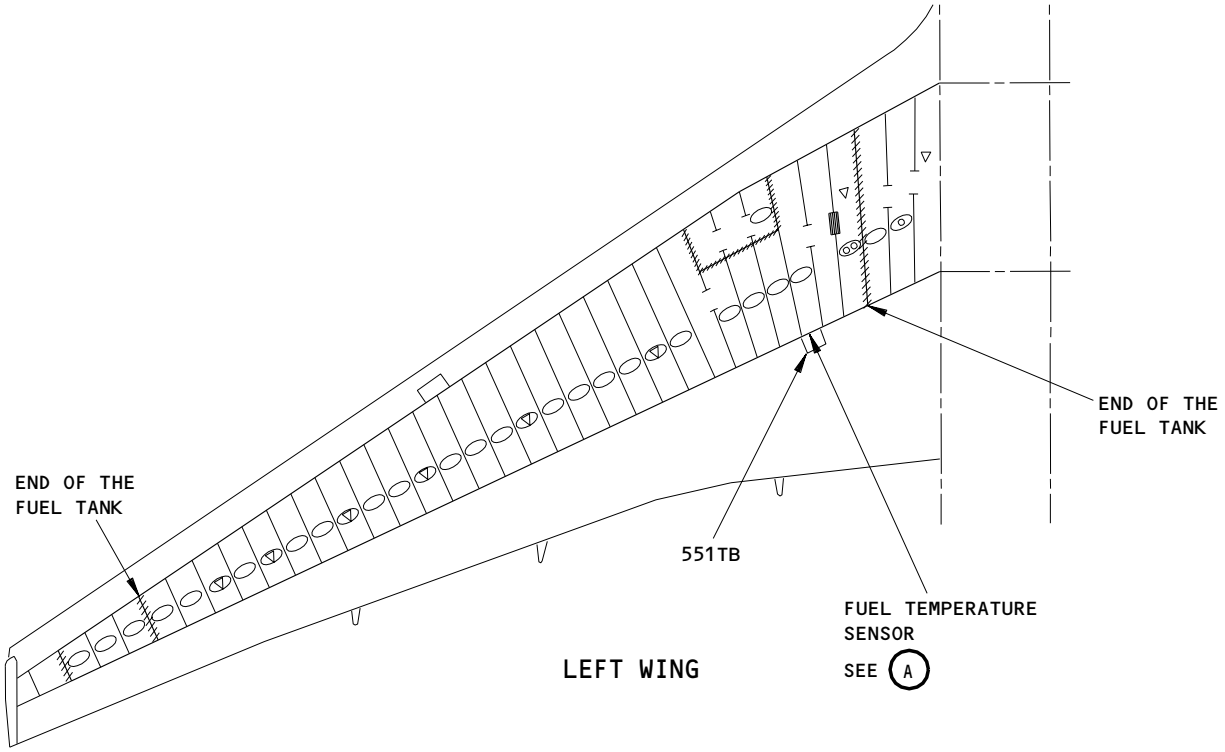

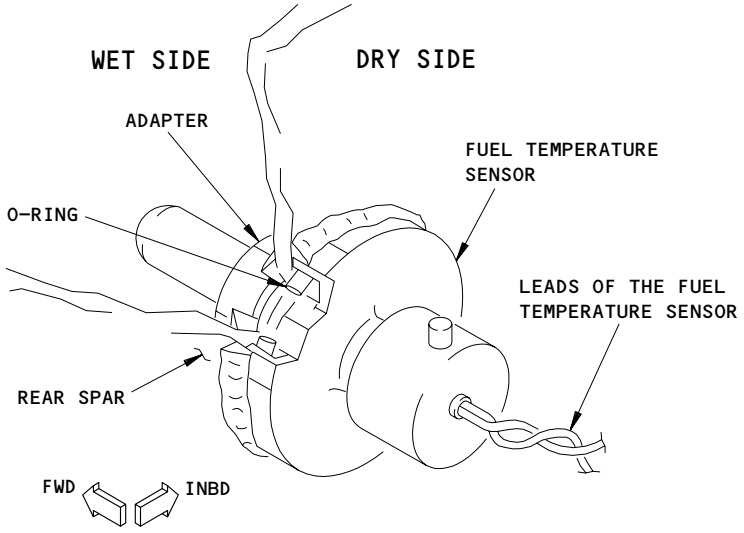

FUEL TEMPERATURE SENSOR

A

Fuel Temperature Sensor Installation
Figure 401

BOEING PROPRIETARY - Copyright (C) - Unpublished Work - See title page for details.

TASK 28-43-01-404-050-002

3. Install the Fuel Temperature Sensor (Fig. 401)

A. References

(1) AMM 06-44-00/201, Wings (Major Zones 500 and 600) Access Doors and Panels

(2) AMM 20-10-21/601, Electrical Bonding

B. Access

(1) Access Panels

551TB Trailing Edge Skin Panel (Left)

C. Procedure

S 424-051-002

(1) Install the fuel temperature sensor into the adapter.

S 434-052-002

(2) Connect the leads of the fuel temperature sensor to the airplane leads.

S 224-053-002

(3) Make sure the bonding resistance between the fuel temperature sensor and the airplane structure is not more than 0.01 ohm (AMM 20-10-21/601).

S 414-054-002

(4) Install the trailing edge skin panel, 551TB (AMM 06-44-00/201).

S 864-095-002

(5) Remove the DO-NOT-CLOSE tags and close these circuit breakers:

(a) On the overhead circuit breaker panel, P11:

1) 11C34, FUEL QTY NO. 1

2) 11M19, FUEL QTY NO. 2

(b) On the main power distribution panel, P6:

1) 6E4, FUELING QTY

(c) On the APU/external power panel, P34:

1) 34L2, FUEL QTY REFUEL

BOEING PROPRIETARY - Copyright (C) - Unpublished Work - See title page for details.

FUEL MEASURING STICKS ASSEMBLIES - DESCRIPTION AND OPERATION

1. General
   A. The fuel measuring sticks allow manual measurement of fuel quantity in the fuel tanks. The fuel measuring sticks should be used when the fuel quantity indicator in the flight compartment is not operating correctly.
   B. Upon delivery of any new airplane, a fuel measuring stick document is provided along with the airplane. The fuel measuring stick document provides instructions for the determination of fuel quantity by using the fuel measuring sticks. The main body of this document is a set of conversion tables relating fuel measuring stick readings and airplane attitude readings to obtain the fuel quantity.

      NOTE: Distribution and storage of the fuel measuring stick documents are determined by each individual airline.

2. Component Details (Fig. 1)
   A. Fuel Measuring Sticks
      (1) There is a total of 16 fuel measuring sticks located on the lower surface of the left and right wing. The left main tank has 7 fuel measuring sticks. The center auxiliary tank has 2 fuel measuring sticks. The right main tank has 7 fuel measuring sticks.
      (2) The 2 fuel measuring sticks in the center auxiliary tank are structure mounted.
      (3) Of the 7 fuel measuring sticks in the left main tank, the fuel measuring stick that is the furthest inboard is structure mounted. The other 6 fuel measuring sticks are access door mounted.
      (4) Of the 7 fuel measuring sticks in the right main tank, the fuel measuring stick that is the furthest inboard is structure mounted. The other 6 fuel measuring sticks are access door mounted.
      (5) The fuel measuring stick consists of a float stop, float, housing, steel armature, stick subassembly, retainer, and latch. A magnet is installed within the float. The housing and float is sealed and mounted to the inside of the lower wing surface. The float stop prevents the float from coming off the housing. The stick subassembly fits into the housing from outside the airplane. Rotating the latch in a counterclockwise direction releases the stick subassembly from the housing and allows it to fall. Depending on the fuel level, the magnet in the float attracts the steel armature and pulls the stick subassembly up. Thus the position of the stick subassembly can provide an indication of the fuel level at that specific fuel measuring stick location.

BOEING PROPRIETARY - Copyright (C) - Unpublished Work - See title page for details.

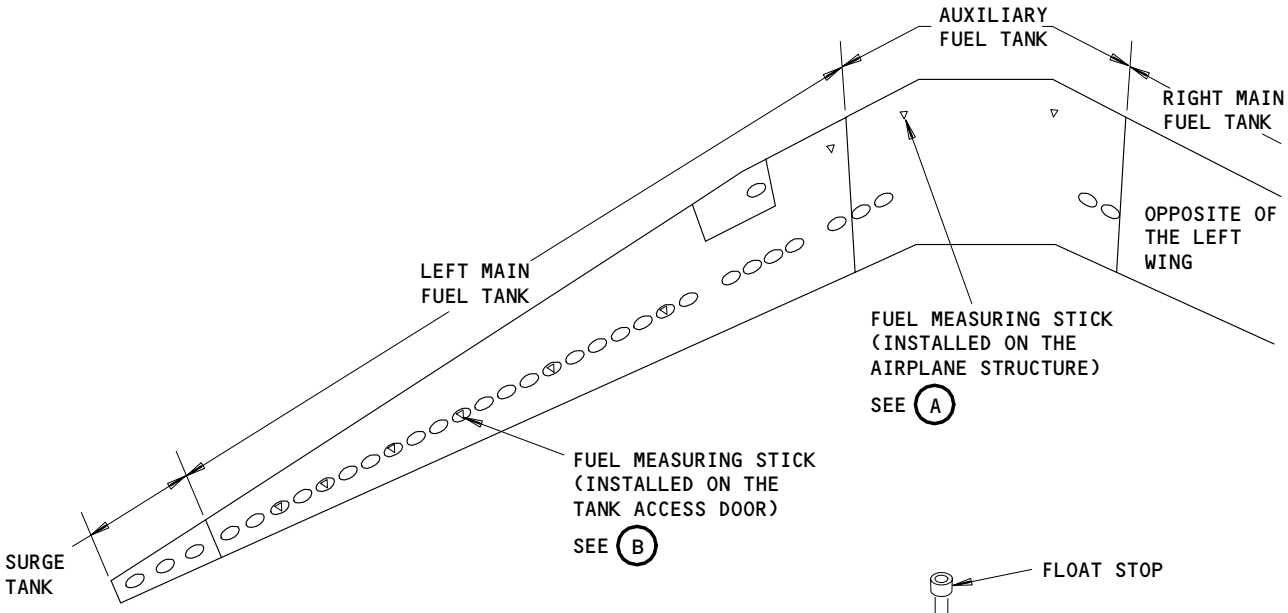

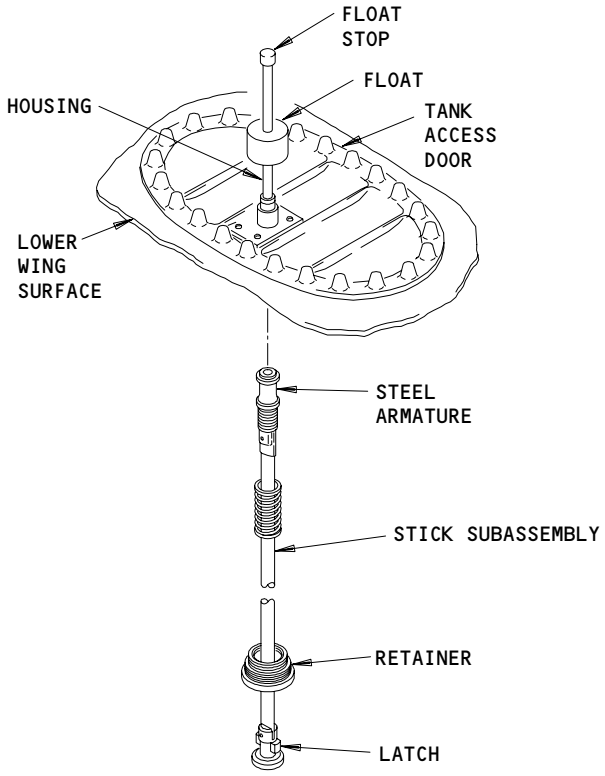

FUEL MEASURING STICK
(INSTALLED ON THE TANK ACCESS DOOR)

B

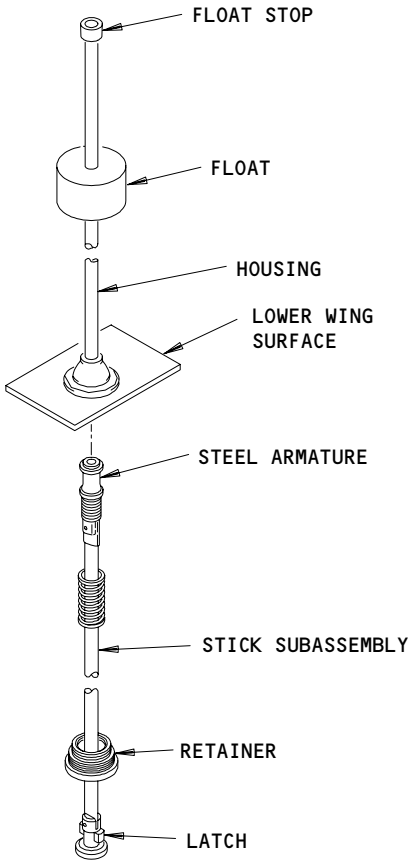

FUEL MEASURING STICK
(INSTALLED ON THE AIRPLANE STRUCTURE)

A

Fuel Measuring Stick Assembly
Figure 1

BOEING PROPRIETARY - Copyright (C) - Unpublished Work - See title page for details.

(6) The calibrated marks on the stick subassembly show fuel quantity in one of the following measurements: inches, kilograms, centimeters, or pounds.

NOTE: See AMM 28-44-00/201 for applicable stick document.

(7) Refer to 28-44-00/201 to determine the fuel quantity by using the fuel measuring sticks.

BOEING PROPRIETARY - Copyright (C) - Unpublished Work - See title page for details.

FUEL MEASURING STICKS

COMPONENT	FIG. 102 SHT	QTY	ACCESS/AREA	AMM REFERENCE
FUEL MEASURING STICK -				
NO. 1	1	2	531BB,631BB	28-44-01
NO. 2	1	2	532BB,632BB	28-44-01
NO. 3	1	2	541BB,641BB	28-44-01
NO. 4	1	2	541GB,641GB	28-44-01
NO. 5	1	2	541LB,641LB	28-44-01
NO. 6	1	2	541PB,641PB	28-44-01
NO. 7	1	2	541TB,641TB	28-44-01
NO. 8	1	2	541VB,641VB	28-44-01

Fuel Measuring Sticks - Component Index
Figure 101

BOEING PROPRIETARY - Copyright (C) - Unpublished Work - See title page for details.

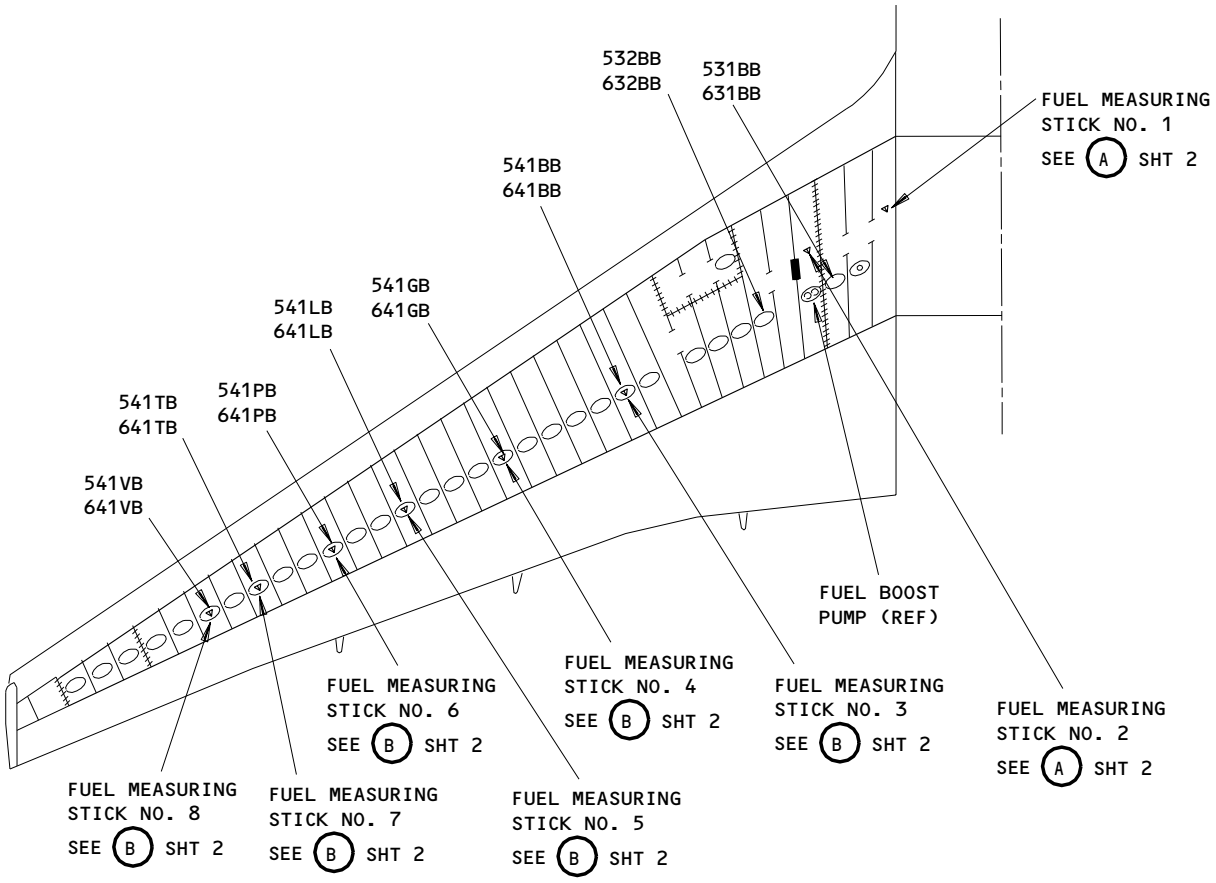

NOTE: 500 SERIES PANELS ON THE LEFT WING
600 SERIES PANELS ON THE RIGHT WING

Fuel Measuring Sticks - Component Location
Figure 102 (Sheet 1)

BOEING PROPRIETARY - Copyright (C) - Unpublished Work - See title page for details.

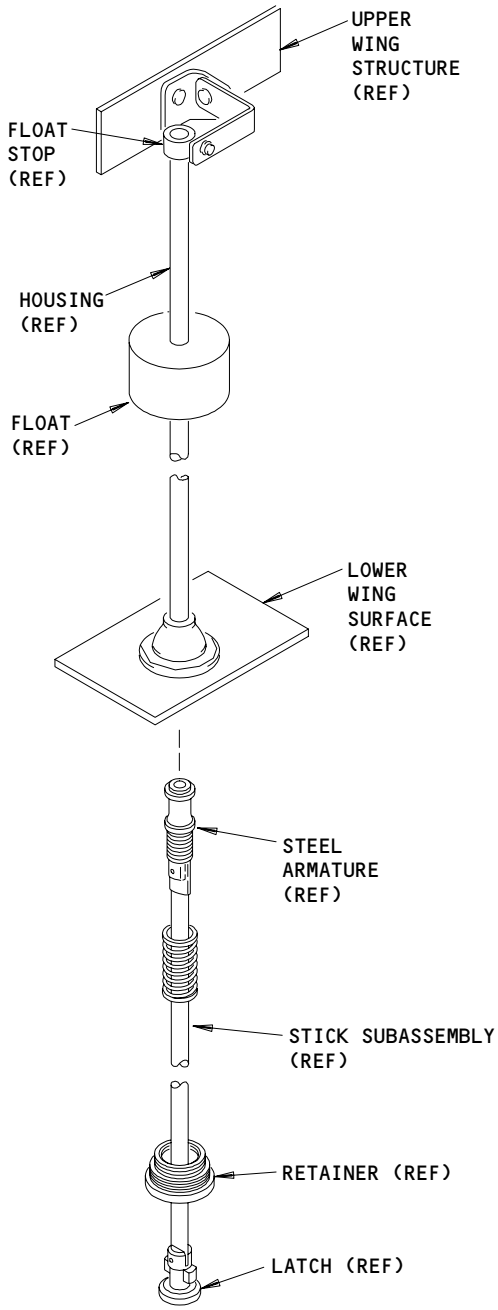

FUEL MEASURING
STICK NO. 1,2
(INSTALLED ON THE
AIRPLANE STRUCTURE)

A

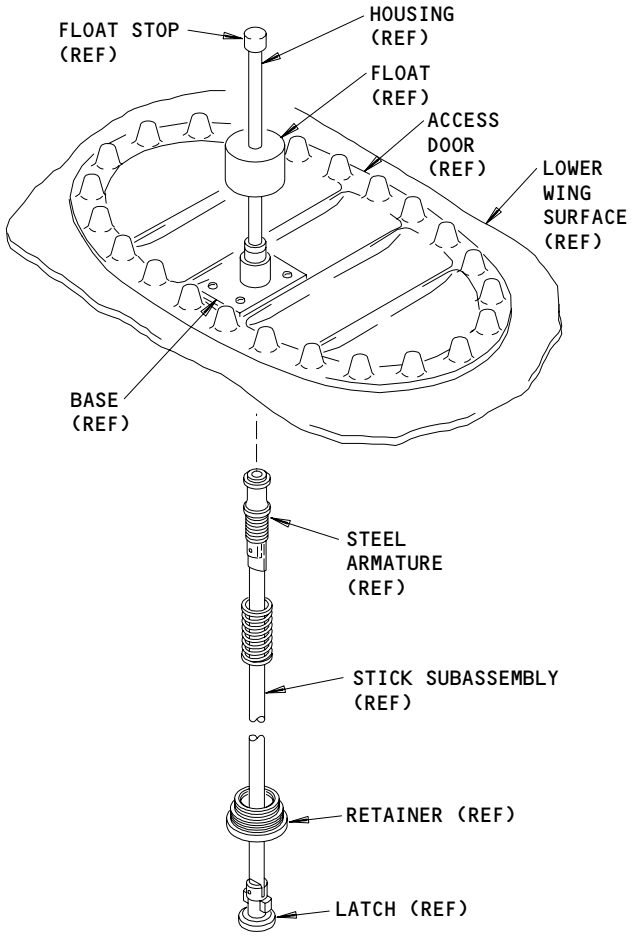

FUEL MEASURING STICK
NO. 3,4,5,6,7,8
(INSTALLED ON THE
TANK ACCESS DOOR)

B

Fuel Measuring Sticks - Component Location (Details from Sht 1)
Figure 102 (Sheet 2)

BOEING PROPRIETARY - Copyright (C) - Unpublished Work - See title page for details.

FUEL MEASURING STICKS - MAINTENANCE PRACTICES

1. General
   A. The airplanes have magnetic-type dripless fuel measuring sticks. The fuel measuring sticks let you manually measure the fuel quantity in the fuel tanks. The fuel measuring sticks are used when the fuel quantity indicator in the flight compartment does not operate correctly. You must use the fuel measuring sticks with the fuel measuring stick document.
   B. On delivery of all new airplanes, a fuel measuring stick document is supplied along with the airplane. The fuel measuring stick document gives instructions to find the fuel quantity with the fuel measuring sticks. The largest part of this document is a set of conversion tables that use the fuel measuring stick readings and airplane attitude readings to get the fuel quantity.

      NOTE: How the fuel measuring stick documents are divided and kept is determined by each airline.

   C. The ranges for the quantity of fuel that each fuel measuring stick can measure are shown in the fuel measuring stick document.
   D. The fuel measuring stick document supersedes all information in this procedure.
   E. To find the fuel quantity in a fuel tank, you must know the airplane attitude and the fuel level.
      (1) Each airplane has a leveling scale and a plumb bob that can hang in the left main wheel well. The airplane attitude is found by the position of the plumb bob across the leveling scale. The vertical axis of the leveling scale measures the airplane wing roll. The horizontal axis of the leveling scale measures the airplane pitch. When the airplane roll is positive for one wing, it is negative for the other wing. When the airplane pitch is positive, it means that the airplane nose is up. When the airplane pitch is negative, it means that the airplane nose is down. The plumb bob gives the most accurate dimensions of airplane pitch and roll. The plumb bob and the leveling scale are shown in Fig. 201.
      (2) Also in the left main wheel well are bubble type inclinometers. The longitudinal inclinometer measures the airplane pitch. The lateral inclinometer measures the airplane roll for the left wing. The airplane roll for the right wing will be the opposite of the quantity measured for the left wing. Fig. 202 shows the longitudinal and lateral inclinometers.
      (3) The fuel level in each fuel tank is measured by the fuel measuring sticks. The location of the fuel measuring sticks are shown in Fig. 203.

BOEING PROPRIETARY - Copyright (C) - Unpublished Work - See title page for details.

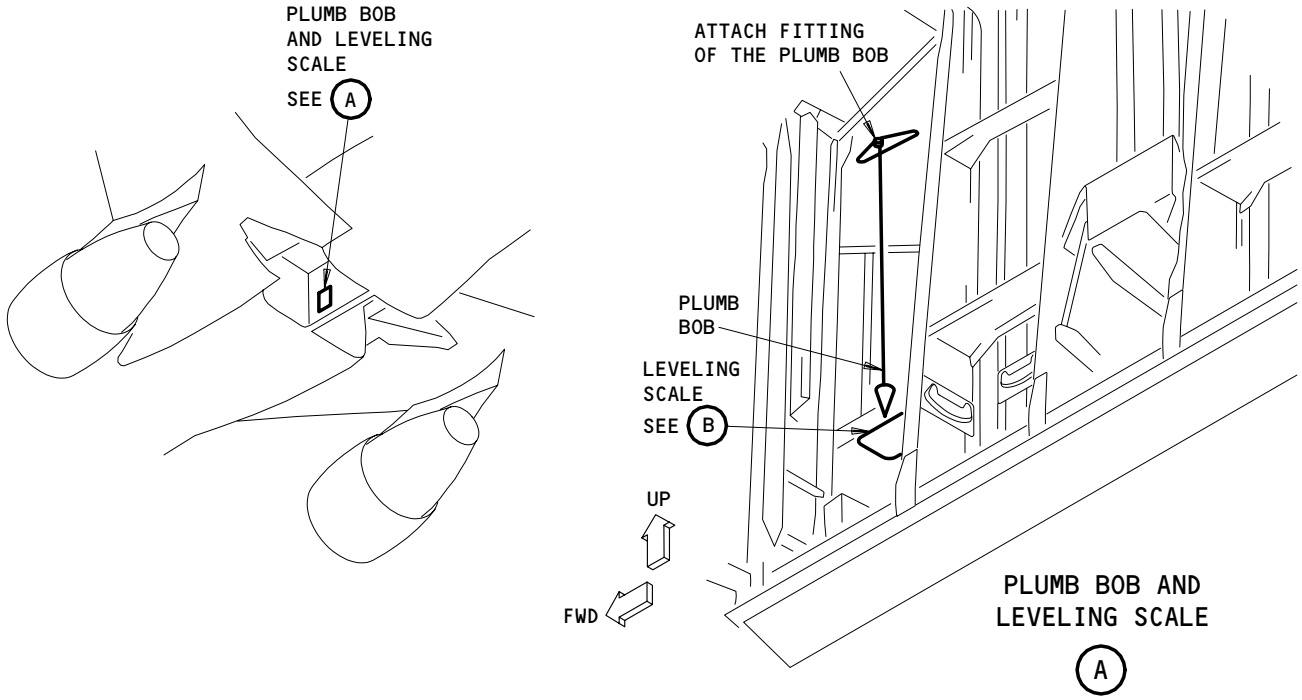

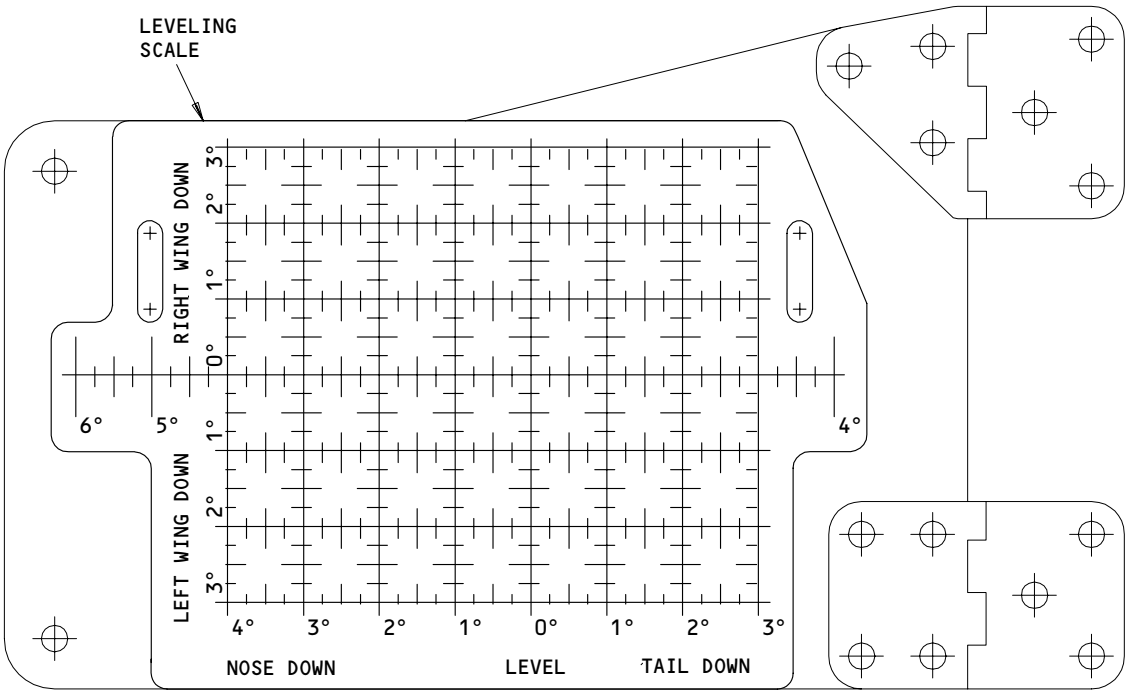

LEVELING SCALE

B

Airplane Plumb Bob and Leveling Scale
Figure 201

BOEING PROPRIETARY - Copyright (C) - Unpublished Work - See title page for details.

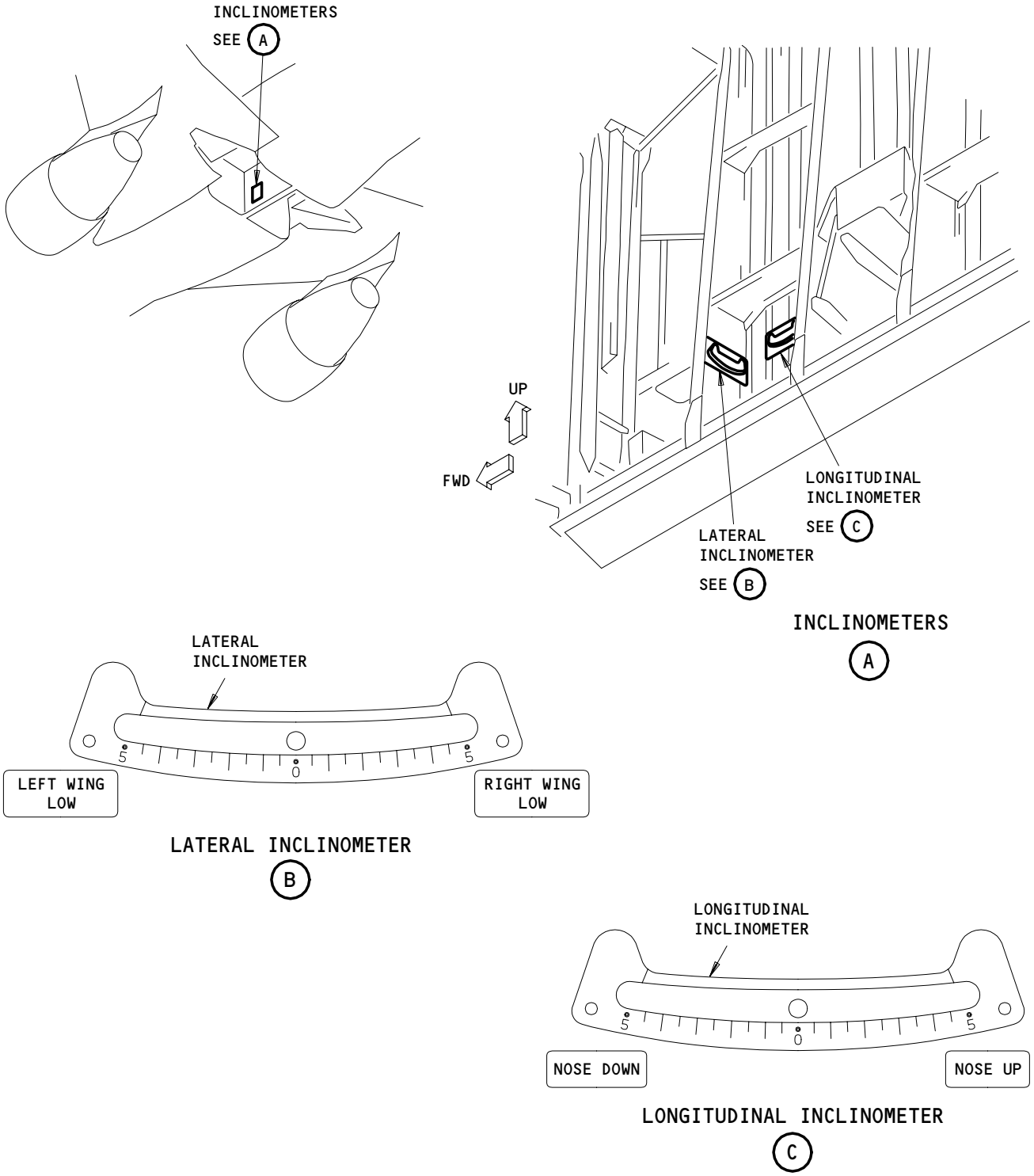

Airplane Leveling Inclinometers
Figure 202

BOEING PROPRIETARY - Copyright (C) - Unpublished Work - See title page for details.

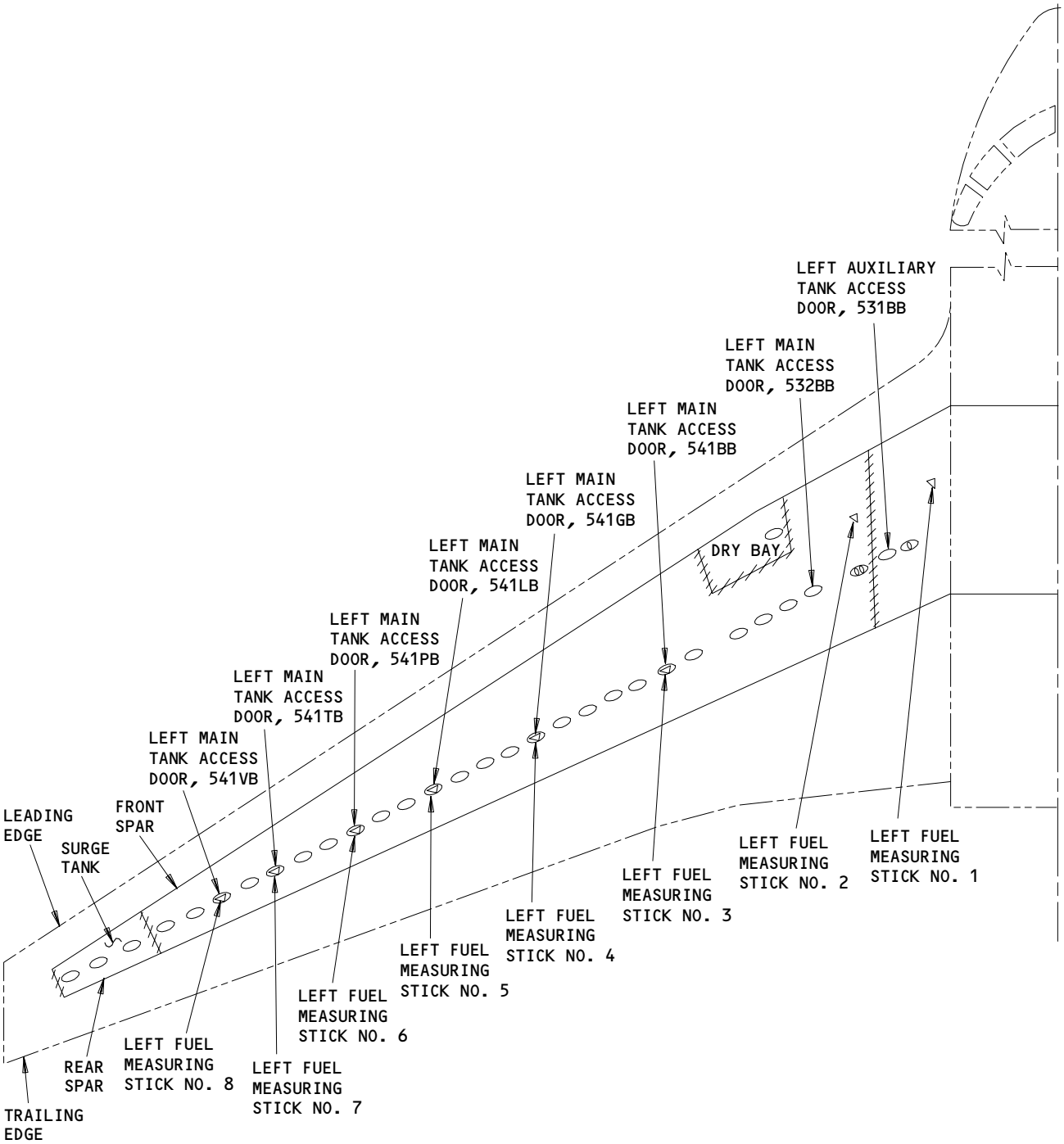

LEFT WING

Fuel Measuring Stick Locations
Figure 203 (Sheet 1)

BOEING PROPRIETARY - Copyright (C) - Unpublished Work - See title page for details.

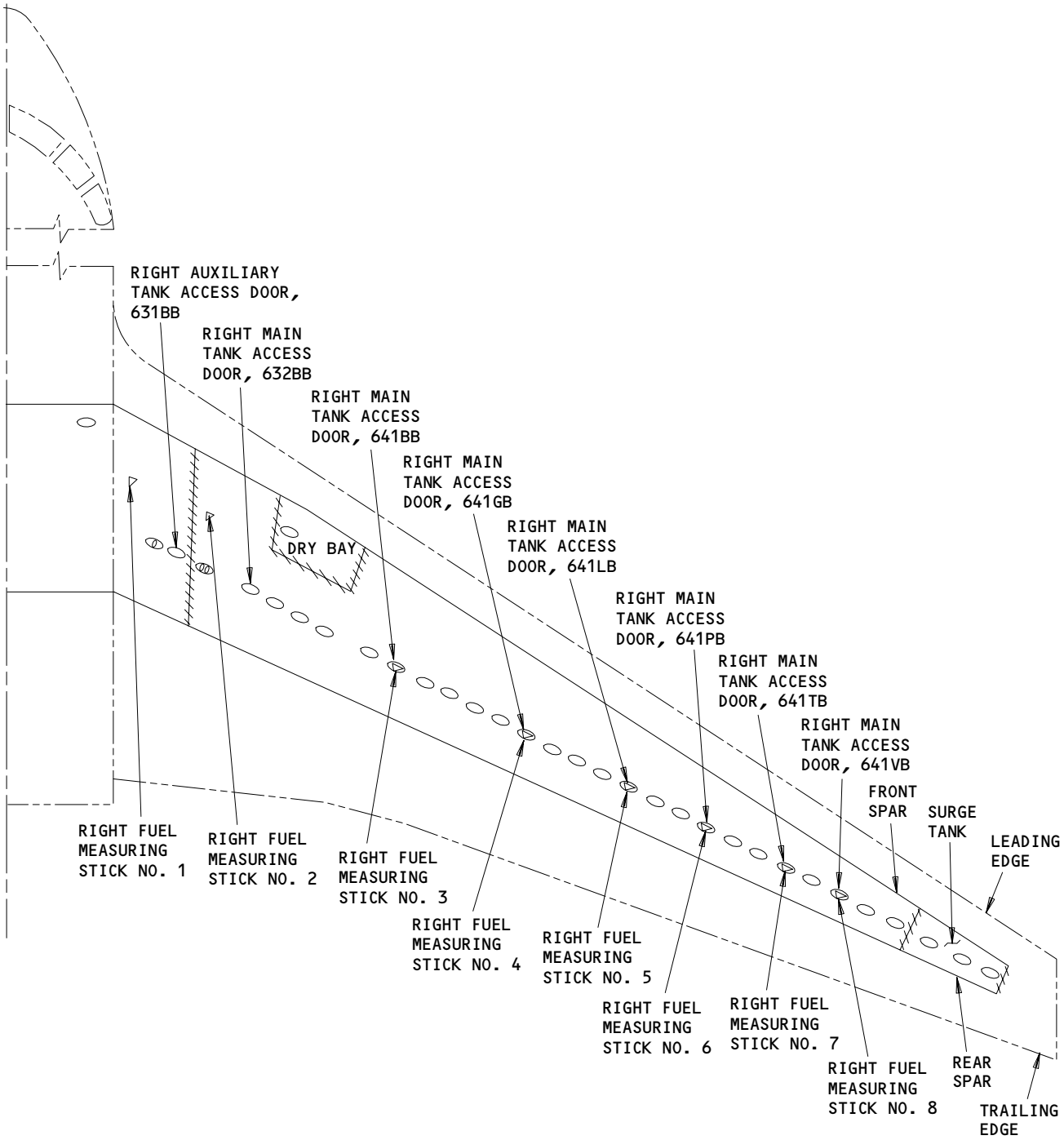

RIGHT WING

Fuel Measuring Stick Locations
Figure 203 (Sheet 2)

BOEING PROPRIETARY - Copyright (C) - Unpublished Work - See title page for details.

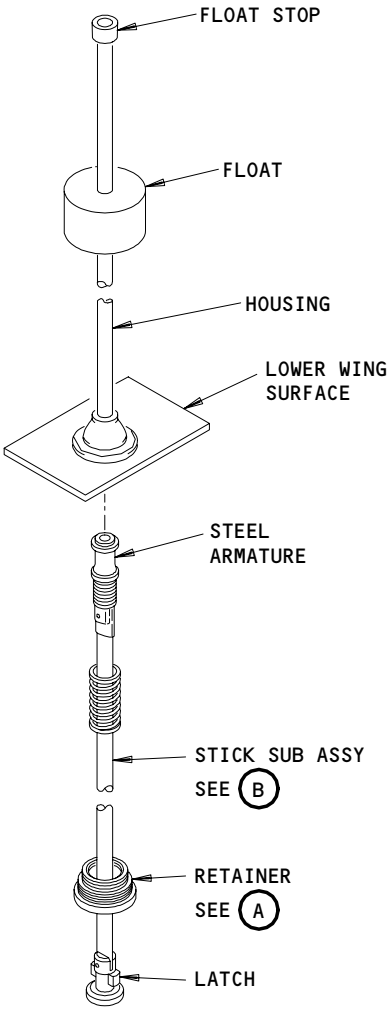

FUEL MEASURING STICK
(INSTALLED ON THE
AIRPLANE STRUCTURE)

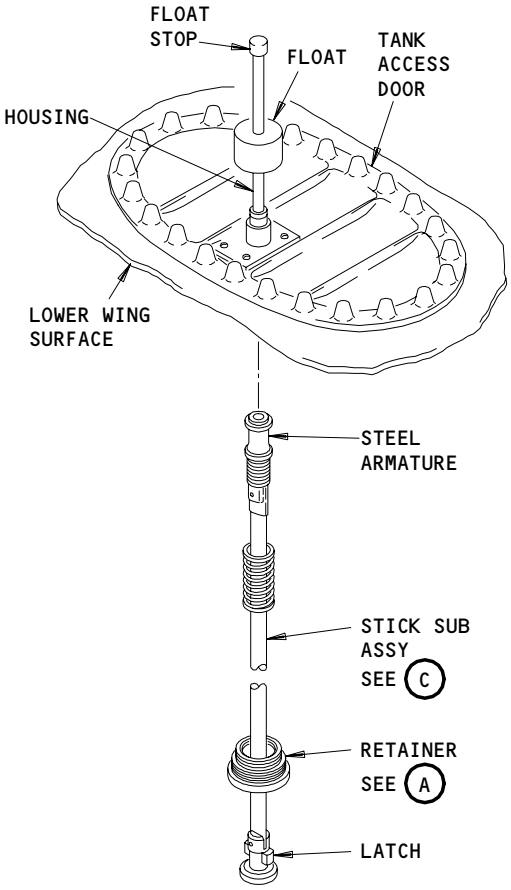

FUEL MEASURING STICK
(INSTALLED ON THE TANK
ACCESS DOOR)

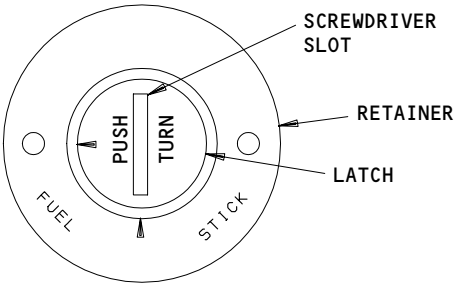

RETAINER
(VIEW FROM BELOW WING)
A

Fuel Measuring Stick Installation
Figure 204 (Sheet 1)

BOEING PROPRIETARY - Copyright (C) - Unpublished Work - See title page for details.

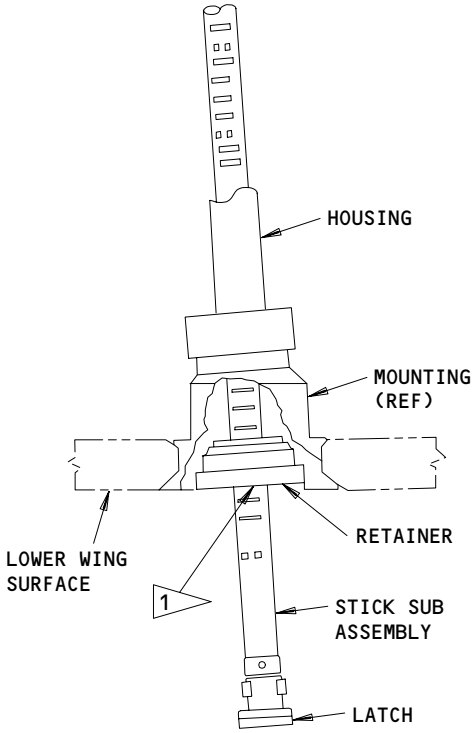

STICK SUB ASSEMBLY
(EXAMPLE)

B

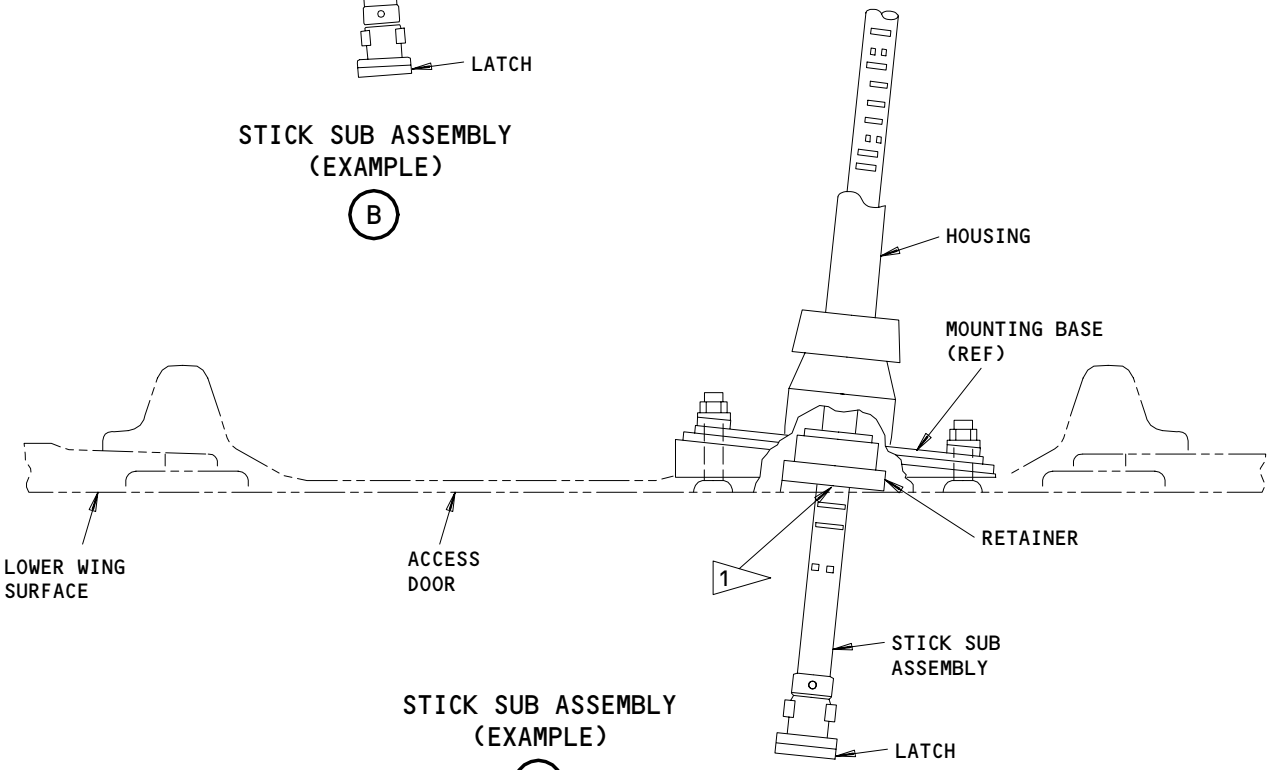

STICK SUB ASSEMBLY
(EXAMPLE)

C

1 READ THE FUEL LEVEL
AT THE LOWER EDGE
OF THE RETAINER

Fuel Measuring Stick Installation
Figure 204 (Sheet 2)

BOEING PROPRIETARY - Copyright (C) - Unpublished Work - See title page for details.

FUEL MEASURING STICK NUMBER FOUR (WSTA 603.2)

PITCH ATTITUDE = 2.00 DEGREES (POSITIVE IS NOSE HIGH)

MEASURING STICK LEVEL IN	USABLE FUEL IN 2								
	ROLL ATTITUDE IN DEGREES (POSITIVE IS WING HIGH)								
1	-2.00	-1.50	-1.00	-0.50	0.0	0.50	1.00	1.50	2.00
X		XX							

NOTE: SEE TABLES LISTED IN EQUIPMENT, TO SELECT THE CORRECT DOCUMENT. USE THE CORRECT DOCUMENT TO FIND THE FUEL QUANTITY, USING FUEL MEASURING STICKS.

1 FUEL STICKS CAN BE MARKED IN:
INCHES, POUNDS, KILOGRAMS OR CENTIMETERS

2 USABLE FUEL CAN BE MEASURED IN:
GALLONS, POUNDS, KILOGRAMS, LITERS

Fuel Measuring Stick Document
Figure 205

BOEING PROPRIETARY - Copyright (C) - Unpublished Work - See title page for details.

(4) The components of the fuel measuring stick are shown in Fig. 204. Figure 204 also shows how to read the fuel level from fuel measuring stick.

(5) To find the fuel level, use a fuel measuring stick that is not fully wet or not fully dry. This is because the graduations on the fuel measuring sticks can only measure a specified range of fuel level.

NOTE: If a fuel measuring stick is fully wet (put fully into fuel), the fuel measuring stick will fully retract up when caught by the magnet on the float.

If a fuel measuring stick is fully dry (not put into fuel), the fuel measuring stick will extend down when caught by the magnet on the float.

(6) A example page of the fuel measuring stick document is shown in Fig. 205. There is a fuel measuring stick table for each fuel measuring stick. The fuel measuring stick tables give airplane pitch from -2.00° to 2.00° in 0.50° increments and airplane roll from -2.00° to 2.00° in 0.50° increments.

NOTE: Go to the tables listed in the equipment section to select the correct document. Use the correct document to find the fuel quantity with the fuel measuring sticks.

F. This procedure contains two tasks. The first task finds the airplane attitude. The second task finds the fuel quantity.

TASK 28-44-00-222-024

2. Find the Airplane Attitude

A. General

(1) The airplane attitude must be in the limits of ±2 degree pitch and ±2 degree roll. You cannot measure the fuel quantity accurately if the airplane attitude is not in these limits. If the airplane attitude is more than the limits, you must make the airplane level in the limits of ±2 degree pitch and ±2 degree roll.

B. Equipment

(1) Plumb Bob - commercially available

C. References

(1) AMM 07-11-01/201, Jacking Airplane
(2) AMM 10-11-01/201, Normal Parking
(3) AMM 12-15-01/301, Main Gear Shock Strut
(4) AMM 12-15-02/301, Nose Gear Shock Strut
(5) AMM 32-00-15/201, Landing Gear Door Locks
(6) AMM 32-00-20/201, Landing Gear Downlocks

BOEING PROPRIETARY - Copyright (C) - Unpublished Work - See title page for details.

D. Access
(1) Location Zones
115 NLG Wheel Well (Left)
116 NLG Wheel Well (Right)
143 MLG Wheel Well (Left)
144 MLG Wheel Well (Right)
149 Aft Section of Keel Beam

E. Procedure

S 582-001
(1) Park the airplane in a position as level as is available (AMM 10-11-01/201).

S 212-002
(2) Make sure the downlocks are installed on the nose and main landing gear (AMM 32-00-20/201).

S 492-025

WARNING: USE THE PROCEDURE IN AMM 32-00-15/201 TO INSTALL THE DOOR LOCKS. THE DOORS OPEN AND CLOSE QUICKLY AND CAN CAUSE INJURY TO PERSONS OR DAMAGE TO EQUIPMENT.

(3) Open the doors for the landing gear and install the door locks (AMM 32-00-15/201).

S 222-003
(4) To find the airplane attitude with the plumb bob method, do the steps that follow:
(a) Fold down the leveling scale, found on the inboard wall (keel beam) of the left main wheel well.
(b) Hang a plumb bob on the attach fitting in the left main wheel well (Fig. 201).

NOTE: The bracket for the attach fitting is attached to the keel beam structure above the leveling scale.

(c) Look at the position of the plumb bob when it does move.

BOEING PROPRIETARY - Copyright (C) - Unpublished Work - See title page for details.

(d) If the airplane attitude is not in ±2 degree pitch and ±2 degree roll, then use one of the methods that follow to make the airplane level in the airplane attitude limits on the leveling scale:

NOTE: The fuel measuring stick document has airplane pitch shown in the subsequent 0.50 degree increments: -2.00, -1.50, -1.00, -0.50, 0.00, 0.50, 1.00, 1.50, 2.00 (Positive is nose high).

The fuel measuring stick document has airplane roll shown in the subsequent 0.50 degree increments: -2.00, -1.50, -1.00, -0.50, 0.00, 0.50, 1.00, 1.50, 2.00 (Positive is wing high).

The fuel measuring stick document is centered around the nominal ground attitude of 0° pitch and 0° roll.

If you make the airplane level to these pitch and roll increments it will make it easier to use the fuel measuring stick document.

1) Inflate or deflate the applicable landing gear shock struts until the plumb bob is in the airplane attitude limits (AMM 12-15-01/301, Main Gear Shock Strut; AMM 12-15-02/301, Nose Gear Shock Strut).
2) Lift the airplane on jacks (AMM 07-11-01/201) until plumb bob is in the airplane attitude limits.

(e) Remove the plumb bob from the attach fitting.
(f) Fold the leveling scale to return it to its usual position.

S 222-004

(5) To find the airplane attitude with the inclinometer method, do the steps that follow:
(a) Read the airplane pitch shown on the longitudinal inclinometer installed on the inboard wall of left main wheel well.
(b) Read the airplane roll shown on the lateral inclinometer installed on the inboard wall of left main wheel well.

BOEING PROPRIETARY - Copyright (C) - Unpublished Work - See title page for details.

(c) If the airplane attitude is not in the limits of ±2 degree pitch and ±2 degree roll, use one of the methods that follow to make the airplane level in the airplane attitude limits on the longitudinal and lateral inclinometers:

NOTE: The fuel measuring stick document has airplane pitch shown in the subsequent 0.50 degree increments: -2.00, -1.50, -1.00, -0.50, 0.00, 0.50, 1.00, 1.50, 2.00 (Positive is nose high).

The fuel measuring stick document has airplane roll shown in the subsequent 0.50 degree increments: -2.00, -1.50, -1.00, -0.50, 0.00, 0.50, 1.00, 1.50, 2.00 (Positive is wing high).

The fuel measuring stick document is centered around the nominal ground attitude of 0° pitch and 0° roll.

If you make the airplane level to these pitch and roll increments will make it easier to use the fuel measuring stick document.

1) Inflate or deflate appropriate landing gear shock struts until the longitudinal and lateral inclinometers are in the airplane attitude limits (AMM 12-15-01/301, Main Gear Shock Strut; AMM 12-15-02/301, Nose Gear Shock Strut).
2) Lift the airplane on jacks (AMM 07-11-01/201) until the longitudinal and lateral inclinometers are in the airplane attitude limits.

TASK 28-44-00-222-005

3. Find the Fuel Quantity

A. Equipment

(1) Select the applicable stick measuring document from the subsequent chart. These documents are for aircraft with auxiliary fuel tanks with a capacity of 79,200 pounds (36,000 kilograms). See AMM 28-11-00/001 to find the fuel tank capacity.

Document Number	Sticks	Tables
D345T025	Inch	Gallons
D345T026	Kilograms	Kilograms
D345T027	Inch	Pounds
D345T028	Inch	Kilograms
D345T029	Inch	Liters
D345T030	Centimeters	Kilograms
D345T031	Pounds	Pounds
D345T032	Centimeters	Liters

BOEING PROPRIETARY - Copyright (C) - Unpublished Work - See title page for details.

(2) Hydrometer - Suitable for measuring specific gravity of fuel - commercially available

B. References

(1) AMM 12-11-03/301, Fuel Sump Draining

C. Access

(1) Location Zones

193	Wing to Body - Forward Lower Half (Left)
194	Wing to Body - Forward Lower Half (Right)
531	Center Auxiliary Tank (Left)
532	Main Tank - Inboard of Rib No. 10 (Left)
541	Main Tank - Outboard of Rib No. 10 (Left)
631	Center Auxiliary Tank (Right)
632	Main Tank - Inboard of Rib No. 10 (Right)
641	Main Tank - Outboard of Rib No. 10 (Right)

(2) Access Panels

531BB	Auxiliary Tank Access Door (Left)
532BB	Main Tank Access Door (Left)
541BB	Main Tank Access Door (Left)
541GB	Main Tank Access Door (Left)
541LB	Main Tank Access Door (Left)
541PB	Main Tank Access Door (Left)
541TB	Main Tank Access Door (Left)
541VB	Main Tank Access Door (Left)
631BB	Auxiliary Tank Access Door (Right)
632BB	Main Tank Access Door (Right)
641BB	Main Tank Access Door (Right)
641GB	Main Tank Access Door (Right)
641LB	Main Tank Access Door (Right)
641PB	Main Tank Access Door (Right)
641TB	Main Tank Access Door (Right)
641VB	Main Tank Access Door (Right)

D. Procedure

S 222-006

(1) If the approximate fuel quantity in the fuel tank is known, refer to the fuel measuring stick document to find which fuel measuring stick to use.

NOTE: Each fuel measuring stick has a range of minimum and maximum fuel quantity that you can measure.

S 222-007

(2) If the approximate fuel quantity in the fuel tank is not known, use the fuel measuring stick that is the largest distance outboard on the fuel tank to be measured.

BOEING PROPRIETARY - Copyright (C) - Unpublished Work - See title page for details.

S 032-008
(3) Use a screwdriver and push up lightly on the latch of the fuel measuring stick and turn the screwdriver slot 90 degrees counterclockwise to release the fuel measuring stick (Fig. 204).

S 032-009
(4) Carefully, lower the fuel measuring stick to its fully extended length.

S 432-029
(5) Use a fingertip or flat palm and slowly lift the fuel measuring stick until some resistance is felt.

NOTE: Resistance occurs when the magnet on the float catches the steel armature of the fuel measuring stick. The fuel measuring stick is held in this position by the magnet on the float.

S 032-010
(6) Release the fuel measuring stick.

S 972-026
(7) Read the fuel level at the lower edge of the retainer.
(a) If the fuel level is not in the range of the graduations on the fuel measuring stick, use the next inboard fuel measuring stick until you find one with the fuel level in the correct range.

S 972-027
(8) Lower and read the fuel measuring stick three times to make sure the fuel level you read is accurate.

S 432-011
(9) Push the fuel measuring stick up into the housing.

S 432-012
(10) Use a screwdriver and push up lightly on the latch of the fuel measuring stick and turn the screwdriver slot 90 degrees clockwise until the fuel measuring stick locks into position.

S 652-013
(11) Drain a small quantity of fuel from the sump drain valve (AMM 12-11-03/301).

NOTE: You must get the sample from the fuel tank that you measure.

S 972-014
(12) Use a hydrometer to find the specific gravity of the fuel sample.

BOEING PROPRIETARY - Copyright (C) - Unpublished Work - See title page for details.

S 972-015
(13) Multiply the specific gravity of the fuel with the density of water to calculate the density of the fuel.

DENSITY OF FUEL = (SPECIFIC GRAVITY OF FUEL) x (DENSITY OF WATER)

S 972-016
(14) Get the correct fuel measuring stick table from the fuel measuring stick document for the applicable fuel measuring stick number and the airplane pitch attitude.

S 972-017
(15) In the first column of the fuel measuring stick table (Fig. 205), find the fuel level that was read from the fuel measuring stick.

S 972-018
(16) Find the correct column for the wing roll attitude that was measured before (Fig. 205).

S 972-019
(17) Read across from the fuel level reading and read down from the correct wing roll attitude (Fig. 205).

S 972-028
(18) The intersection of the two columns gives the quantity of usuable fuel in the fuel tank.

S 222-023
(19) Refer to the sample problem in the fuel measuring stick document for more information.

BOEING PROPRIETARY - Copyright (C) - Unpublished Work - See title page for details.

FUEL MEASURING STICK ASSEMBLY - REMOVAL/INSTALLATION

1. General
   A. Sixteen fuel measuring sticks are installed in the airplane, seven in each main fuel tank, one in the left auxiliary fuel tank and one in the right auxiliary fuel tank. Each fuel measuring stick contains a housing with a stick subassembly, and a float fitted around the housing.
   B. This procedure contains six tasks. The first task removes the fuel measuring stick. The second task installs the fuel measuring stick. The third task removes the housing of the fuel measuring stick. The fourth task installs the housing of the fuel measuring stick. The fifth task removes the base of the fuel measuring stick. The sixth task installs the base of the fuel measuring stick.

TASK 28-44-01-004-001

2. Remove the Fuel Measuring Stick
   A. Access
      (1) Location Zones
         531 Center Auxiliary Tank (Left)
         532 Main Tank - Inboard of Rib No. 10 (Left)
         541 Main Tank - Outboard of Rib No. 10 (Left)
         631 Center Auxiliary Tank (Right)
         632 Main Tank - Inboard of Rib No. 10 (Right)
         641 Main Tank - Outboard of Rib No. 10 (Right)

   B. Procedure

      S 864-002
      (1) Push up lightly on the screwdriver slot of the fuel measuring stick with a screwdriver (View C, Fig. 402).

      S 864-003
      (2) Turn the screwdriver slot 90 degrees counterclockwise to release the fuel measuring stick (1).

      S 864-004
      (3) Lower the fuel measuring stick (1).

BOEING PROPRIETARY - Copyright (C) - Unpublished Work - See title page for details.

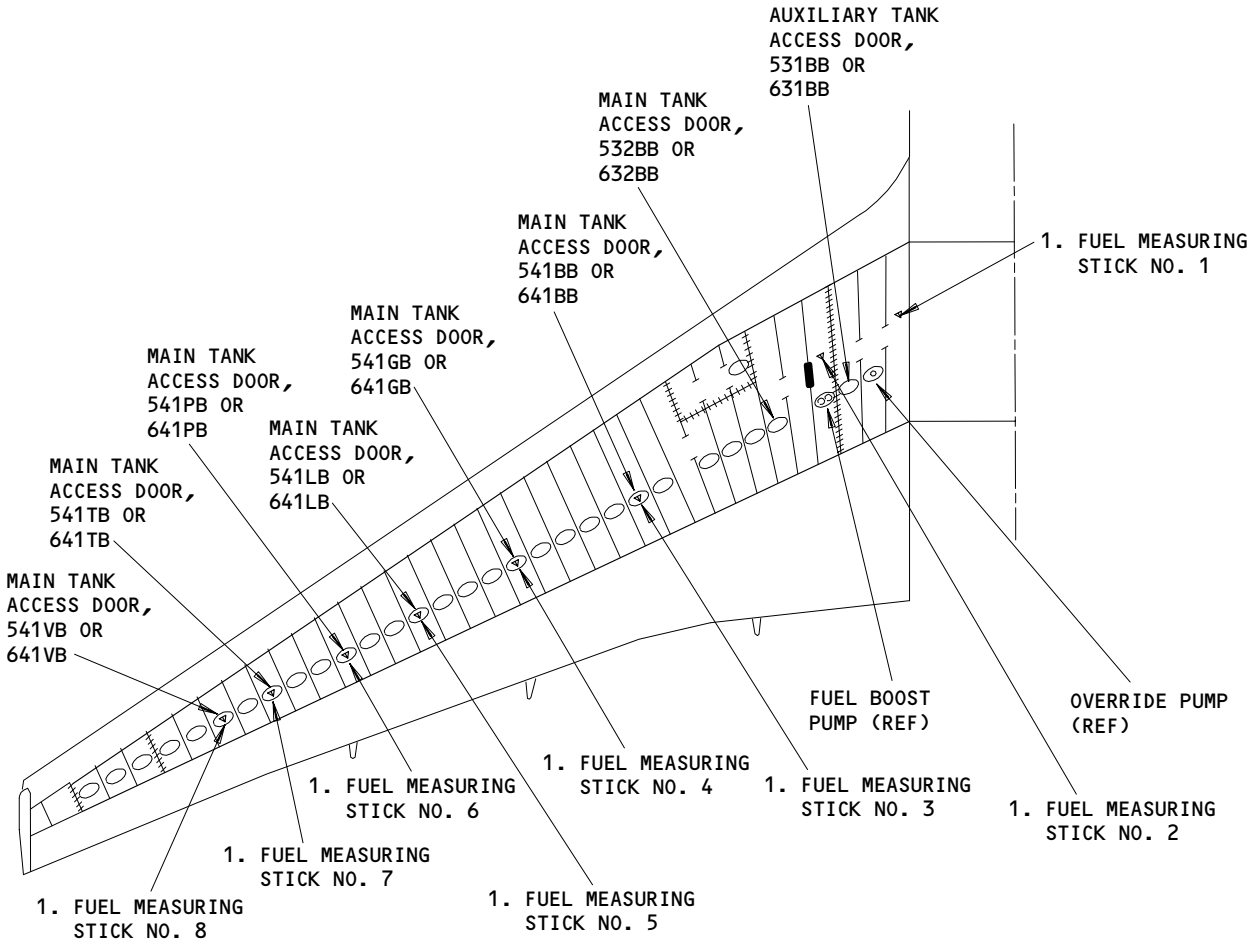

LEFT WING SHOWN,
RIGHT WING OPPOSITE

NOTE: 500 SERIES PANELS ON THE LEFT WING,
600 SERIES PANELS ON THE RIGHT WING.

Fuel Measuring Stick Location
Figure 401

BOEING PROPRIETARY - Copyright (C) - Unpublished Work - See title page for details.

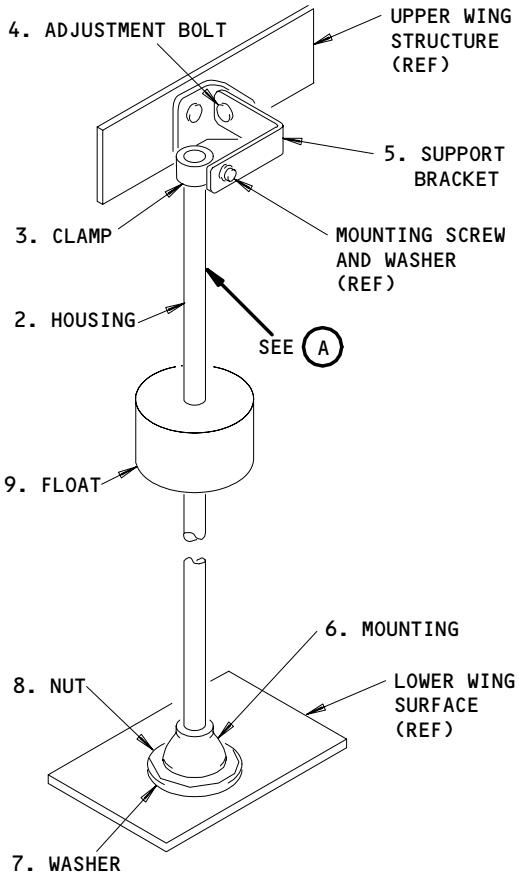

LEFT OR RIGHT FUEL MEASURING STICK NO. 1 OR NO. 2 (INSTALLED ON THE AIRPLANE STRUCTURE)

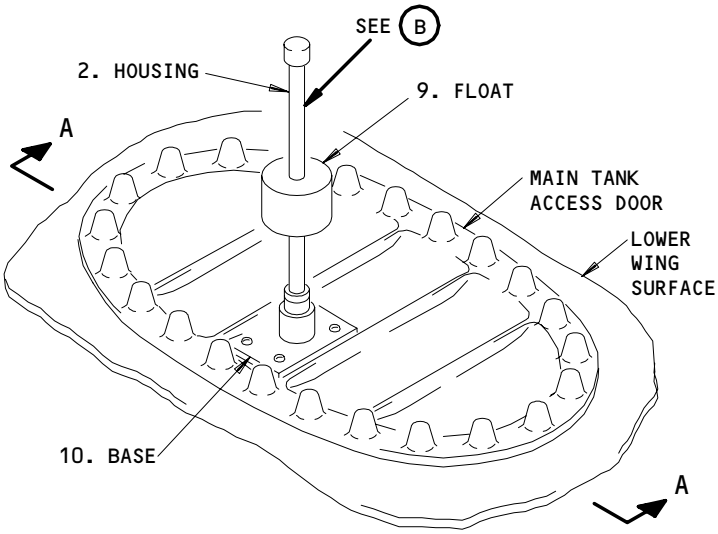

LEFT OR RIGHT FUEL MEASURING STICK NO. 3,4,5,6,7,8 (INSTALLED ON THE MAIN TANK ACCESS DOOR)

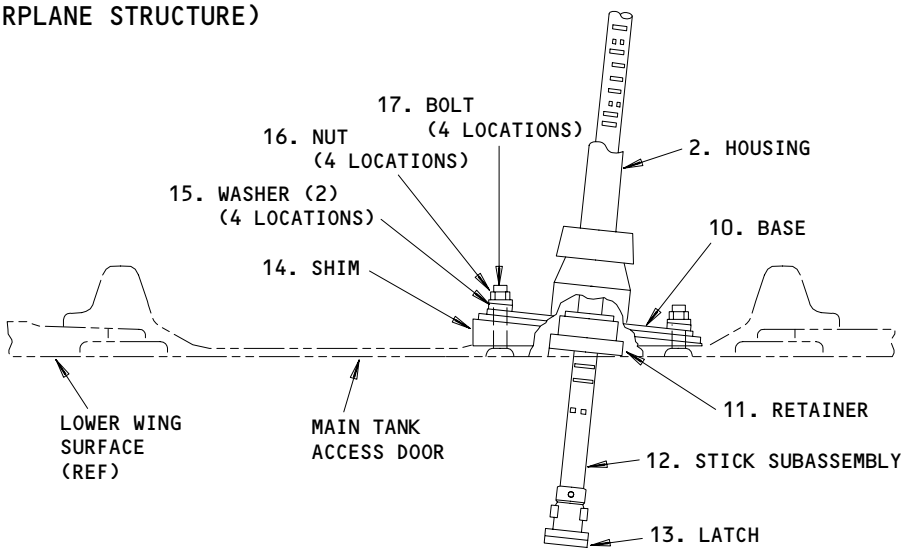

A-A

Fuel Measuring Stick and Housing Installation
Figure 402 (Sheet 1)

BOEING PROPRIETARY - Copyright (C) - Unpublished Work - See title page for details.

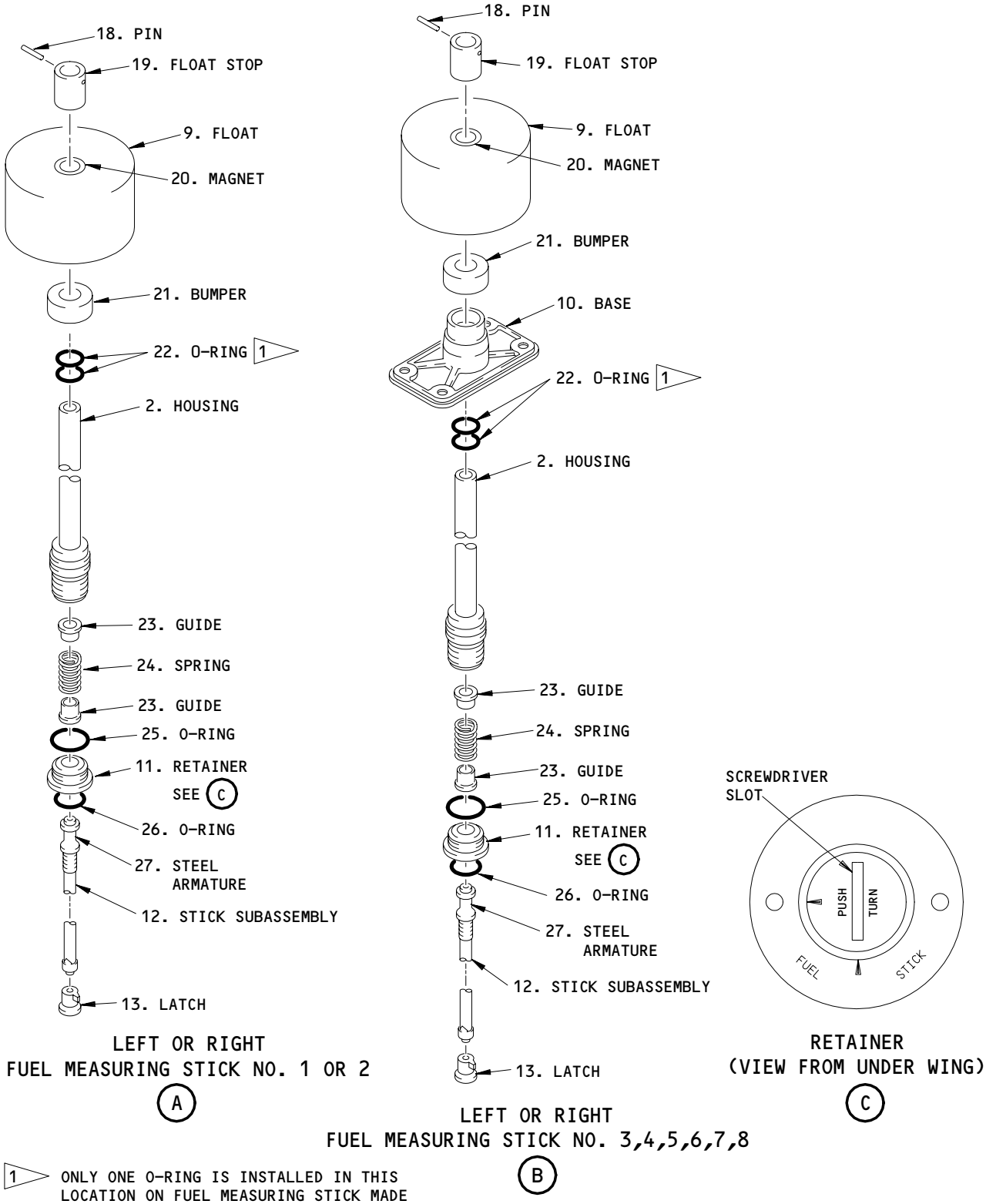

1 ONLY ONE O-RING IS INSTALLED IN THIS LOCATION ON FUEL MEASURING STICK MADE AFTER OCTOBER, 1990.

Fuel Measuring Stick and Housing Installation
Figure 402 (Sheet 2)

BOEING PROPRIETARY - Copyright (C) - Unpublished Work - See title page for details.

S 024-005
(4) Remove the latch (13) from the fuel measuring stick (1) (View A or B, Fig. 402).

S 864-006
(5) Lift the fuel measuring stick (1) to its usual position.

S 024-007
(6) Use a snapring plier or equivalent and loosen the retainer (11) from the base (10) or mounting (6).

S 024-041
(7) Remove the fuel measuring stick (1) with the retainer (11), spring (24), and two guides (23), from the housing (2).

NOTE: You can feel a small force as the steel armature (27) on the fuel measuring stick (1) goes through the magnet (20) in the float (9).

TASK 28-44-01-404-008

3. Install the Fuel Measuring Stick

A. Equipment

(1) T5-0497K - spanner wrench, to install the retainer in the housing - Kaiser Electroprecision, 17000 South Red Hill Avenue, Irvine, CA 92714

B. Access

(1) Location Zones

531	Center Auxiliary Tank (Left)
532	Main Tank - Inboard of Rib No. 10 (Left)
541	Main Tank - Outboard of Rib No. 10 (Left)
631	Center Auxiliary Tank (Right)
632	Main Tank - Inboard of Rib No. 10 (Right)
641	Main Tank - Outboard of Rib No. 10 (Right)

BOEING PROPRIETARY - Copyright (C) - Unpublished Work - See title page for details.

C. Procedure

S 434-009
(1) Install two new O-rings (25, 26) on the retainer (11) (View A or B, Fig. 402).

S 424-010
(2) With the latch (13) of the fuel measuring stick (1) removed, install the fuel measuring stick (1) in the housing (2).

S 424-011
(3) Install the two guides (23), the spring (24), and the retainer (11) in the housing (2).

S 424-012
(4) Tighten the retainer (11) in the housing (2) to 75-85 pound-inches.

S 864-013
(5) Lower the fuel measuring stick (1).

S 424-014
(6) Install the latch (13) on the fuel measuring stick (1).

S 864-015
(7) Push the fuel measuring stick into housing (2).

S 864-016
(8) Turn the fuel measuring stick (1) clockwise to lock it.

TASK 28-44-01-004-017

4. Remove the Housing of the Fuel Measuring Stick

A. References
(1) 28-11-00/201, Fuel Tanks (Purging and Entry)
(2) 28-11-01/401, Main Tank Access Door
(3) 28-11-02/401, Auxiliary Tank Access Door

BOEING PROPRIETARY - Copyright (C) - Unpublished Work - See title page for details.

(4) 28-26-00/201, Defueling

B. Access

(1) Location Zones

531	Center Auxiliary Tank (Left)
532	Main Tank - Inboard of Rib No. 10 (Left)
541	Main Tank - Outboard of Rib No. 10 (Left)
631	Center Auxiliary Tank (Right)
632	Main Tank - Inboard of Rib No. 10 (Right)
641	Main Tank - Outboard of Rib No. 10 (Right)

(2) Access Panels

531BB	Auxiliary Tank Access Door (Left)
532BB	Main Tank Access Door (Left)
541BB	Main Tank Access Door (Left)
541GB	Main Tank Access Door (Left)
541LB	Main Tank Access Door (Left)
541PB	Main Tank Access Door (Left)
541TB	Main Tank Access Door (Left)
541VB	Main Tank Access Door (Left)
631BB	Auxiliary Tank Access Door (Right)
632BB	Main Tank Access Door (Right)
641BB	Main Tank Access Door (Right)
641GB	Main Tank Access Door (Right)
641LB	Main Tank Access Door (Right)
641PB	Main Tank Access Door (Right)
641TB	Main Tank Access Door (Right)
641VB	Main Tank Access Door (Right)

C. Procedure

S 034-018

(1) Remove the fuel measuring stick (1) per the Remove the Fuel Measuring Stick paragraph.

S 654-019

(2) Defuel the applicable fuel tank (Ref 28-26-00).

BOEING PROPRIETARY - Copyright (C) - Unpublished Work - See title page for details.

S 654-020

(3) Drain and purge the applicable fuel tank (Ref 28-11-00).

S 024-022

(4) For the housing of the left or right fuel measuring stick No. 1, do the steps that follow:
   (a) Remove the left or right auxiliary tank access door, 531BB or 631BB (Fig. 401) (Ref 28-11-00).

   WARNING: OBEY THE FUEL TANK ENTRY PRECAUTIONS. FAILURE TO OBEY THE FUEL TANK ENTRY PRECAUTIONS COULD CAUSE INJURY TO PERSONS OR DAMAGE TO EQUIPMENT.

   (b) Obey the fuel tank entry precautions (AMM 28-11-00/201).
   (c) Go into the fuel tank.
   (d) Get access to the housing (2) of the fuel measuring stick (1).
   (e) Remove the clamp (3) that holds the top end of the housing (2) (Fig. 402).
   (f) Loosen the housing (2) with a 9/16-inch hex-head wrench through the bottom of the mounting (6).
   (g) Remove the pin (18) that holds the float stop (19) to the housing (2) (View A, Fig. 402).
   (h) Remove the float stop (19), float (9) and bumper (21) from the housing (2).
   (i) Remove the housing (2) from the fuel tank.

S 024-021

(5) For the housing of the left or right fuel measuring stick No. 2, do the steps that follow:
   (a) Remove the left or right main tank access door, 532BB or 632BB (Fig. 401) (Ref 28-11-00).

   WARNING: OBEY THE FUEL TANK ENTRY PRECAUTIONS. FAILURE TO OBEY THE FUEL TANK ENTRY PRECAUTIONS COULD CAUSE INJURY TO PERSONS OR DAMAGE TO EQUIPMENT.

   (b) Obey the fuel tank entry precautions (AMM 28-11-00/201).
   (c) Go into the fuel tank.
   (d) Get access to the housing (2) of the fuel measuring stick (1).
   (e) Remove the clamp (3) that holds the top end of the housing (2) (Fig. 402).

BOEING PROPRIETARY - Copyright (C) - Unpublished Work - See title page for details.

(f) Loosen the housing (2) with a 9/16-inch hex-head wrench through the bottom of the mounting (6).
(g) Remove the pin (18) that holds the float stop (19) to the housing (2) (View A, Fig. 402).
(h) Remove the float stop (19), float (9) and bumper (21) from the housing (2).
(i) Remove the housing (2) from the fuel tank.

S 024-042
(6) For the housing of the left or right fuel measuring stick No. 3 thru No. 8, do the steps that follow:

CAUTION: BE CAREFUL WHEN YOU REMOVE THE MAIN TANK ACCESS DOOR WITH THE FUEL MEASURING STICK ATTACHED. THE HOUSING (2) IS MADE OF FIBERGLASS MATERIAL AND IS EASILY DAMAGED.

(a) Remove the applicable main tank access door with the housing (2) attached (Fig. 401) (Ref 28-11-01).

Housing of the Fuel Measuring Stick	Left Main Tank Access Door	Right Main Tank Access Door
No. 3	541BB	641BB
No. 4	541GB	641GB
No. 5	541LB	641LB
No. 6	541PB	641PB
No. 7	541TB	641TB
No. 8	541VB	641VB

(b) Remove the pin (18) that holds the float stop (19) to the housing (2) (View B, Fig. 402).
(c) Remove the float stop (19), the float (9) and the bumper (21) from the housing (2).
(d) With a torque wrench, loosen the housing (2) from the base (10) out of the fuel tank.
(e) Remove the housing (2) from the base (10).

TASK 28-44-01-404-023
5. Install the Housing of the Fuel Measuring Stick
A. Consumable Materials
(1) A00767 Sealant - Integral Fuel Tank BMS 5-45

BOEING PROPRIETARY - Copyright (C) - Unpublished Work - See title page for details.

(2) D00421 - Grease MIL-S-8660

B. References
(1) 28-11-00/201, Fuel Tanks (Purging and Entry)
(2) 28-11-01/401, Main Tank Access Door
(3) 28-11-02/401, Auxiliary Tank Access Door

C. Access
(1) Location Zones

531	Center Auxiliary Tank (Left)
532	Main Tank - Inboard of Rib No. 10 (Left)
541	Main Tank - Outboard of Rib No. 10 (Left)
631	Center Auxiliary Tank (Right)
632	Main Tank - Inboard of Rib No. 10 (Right)
641	Main Tank - Outboard of Rib No. 10 (Right)

(2) Access Panels

531BB	Auxiliary Tank Access Door (Left)
532BB	Main Tank Access Door (Left)
541BB	Main Tank Access Door (Left)
541GB	Main Tank Access Door (Left)
541LB	Main Tank Access Door (Left)
541PB	Main Tank Access Door (Left)
541TB	Main Tank Access Door (Left)
541VB	Main Tank Access Door (Left)
631BB	Auxiliary Tank Access Door (Right)
632BB	Main Tank Access Door (Right)
641BB	Main Tank Access Door (Right)
641GB	Main Tank Access Door (Right)
641LB	Main Tank Access Door (Right)
641PB	Main Tank Access Door (Right)
641TB	Main Tank Access Door (Right)
641VB	Main Tank Access Door (Right)

D. Procedure

S 434-024
(1) Install two new O-rings (22) on the housing (2) (View A or B, Fig. 402).

NOTE: Only one O-ring is installed in this location on fuel measuring sticks made after October, 1990.

BOEING PROPRIETARY - Copyright (C) - Unpublished Work - See title page for details.

S 424-025

(2) For the housing of the left or right fuel measuring stick No. 3 thru No. 8, do the steps that follow:
   (a) Put the bottom end of the housing through the base (10) on the main tank access door (View A-A, Fig. 402) (Ref 28-11-01).
   (b) Put the bumper (21), float (9) and the float stop (19) on the housing (2) (View B, Fig. 402).
   (c) Install the pin (18) in the float stop (19).
   (d) Tighten the bottom end of the housing (2) in the base (10) from out of the fuel tank to 15-20 pound-inches.
   (e) Install the applicable main tank access door with the housing (2) attached (Fig. 401) (Ref 28-11-01).

Housing of the Fuel Measuring Stick	Left Main Tank Access Door	Right Main Tank Access Door
No. 3	541BB	641BB
No. 4	541GB	641GB
No. 5	541LB	641LB
No. 6	541PB	641PB
No. 7	541TB	641TB
No. 8	541VB	641VB

S 424-026

(3) For the housing of the left or right fuel measuring stick No. 1 or No. 2, do the steps that follow:
   (a) Put the housing (2) through the mounting from out of the fuel tank (Fig. 402).

   WARNING: OBEY THE FUEL TANK ENTRY PRECAUTIONS. FAILURE TO OBEY THE FUEL TANK ENTRY PRECAUTIONS CAN CAUSE INJURY TO PERSONS OR DAMAGE TO EQUIPMENT.

   (b) Obey the fuel tank entry precautions (AMM 28-11-00/201).

BOEING PROPRIETARY - Copyright (C) - Unpublished Work - See title page for details.

(c) Go into the applicable fuel tank.
(d) Get access to the housing (2) of the fuel measuring stick (1).
(e) Put the bumper (21), float (9) and float stop (19) on the housing (2) (View A, Fig. 402).
(f) Install the pin (18) in the float stop (19).
(g) Tighten the nut (8) at the bottom end of the housing (2) in the mounting (6) to 15-20 pound-inches (Fig. 402).
(h) Apply BMS 5-45 sealant to seal the area between the lower wing surface, mounting (6), nut (8), washer (7) and housing (2).
(i) Attach the bumper (21) to the mounting (6) while the sealant is wet.
(j) Remove the unwanted sealant from around and above the bumper (21).
(k) Attach the clamp (3) that holds the top end of the housing (2).
(l) Make sure the float (9) can move the full length of the housing (2) and not touch the structure or fuel tank components.
(m) If the float (9) touches the structure or tank component, do the adjustments that follow:
1) Loosen the adjustment bolt (4).
2) Move the support bracket (5) until the float (9) can move freely on the housing (2).
3) Tighten the adjustment bolt (4).
(n) For the left or right fuel measuring stick No. 1, install the left or right auxiliary tank access door, 531BB or 631BB (Fig. 401) (Ref 28-11-02).
(o) For the left or right fuel measuring stick No. 2, install the left or right main tank access door, 532BB or 632BB (Fig. 401) (Ref 28-11-01).

S 434-027
(4) Install the fuel measuring stick (1) per the Install the Fuel Measuring Stick paragraph.

TASK 28-44-01-004-028
6. <u>For Fuel Measuring Sticks No. 3 thru No. 8, Remove the Base of the Fuel Measuring Stick</u>
A. Access
(1) Location Zones
541 Main Tank - Outboard of Rib No. 10 (Left)
641 Main Tank - Outboard of Rib No. 10 (Right)

BOEING PROPRIETARY - Copyright (C) - Unpublished Work - See title page for details.

B. Procedure

S 034-029
(1) Remove the applicable fuel measuring stick (1) per the Remove the Fuel Measuring Stick paragraph.

S 034-030
(2) Remove the applicable housing (2) of the fuel measuring stick per the Remove the Housing of the Fuel Measuring Stick paragraph.

S 034-031
(3) Remove the nuts (16), washers (15), bolts (17) and shim (14) that attach the base (10) to the main tank access door (View A-A, Fig. 402).

S 024-032
(4) Remove the base (10) from the main tank access door.

TASK 28-44-01-404-033
7. <u>For Fuel Measuring Sticks No. 3 thru No. 8, Install the Base of the Fuel Measuring Stick</u>

A. Consumable Materials
(1) A00767 Sealant - Integral Fuel Tank BMS 5-45

B. References
(1) 20-10-21/401, Electrical Bonding
(2) 28-11-00/801, Fuel Tanks

C. Access
(1) Location Zones
541 Main Tank - Outboard of Rib No. 10 (Left)
641 Main Tank - Outboard of Rib No. 10 (Right)

D. Procedure

S 424-034
(1) Install the shim (14) between the base (10) and the main tank access door (View A-A, Fig. 402).

BOEING PROPRIETARY - Copyright (C) - Unpublished Work - See title page for details.

S 424-035
(2) Install the bolts (17), washers (15) and nuts (16) to attach the base (10) to the main tank access door.

S 394-044
(3) Apply a fillet seal between the base (10) and the main tank access door with BMS 5-45 sealant per Repair of Sealant Leaks in Tank Structure paragraph (AMM 28-11-00/801).

S 394-045
(4) Apply a layer of BMS 5-45 sealant on the bolts (17), nuts (16), washers (15) and the shim (14) per the Repair at Sealant Leaks in Tank paragraph (AMM 28-11-00/801).

S 224-038
(5) Make sure the bonding resistance between the base (10) and the main tank access door is not more than 0.01 ohm (Ref 20-10-21).

S 434-039
(6) Install the housing (2) on the main tank access door per the Install the Housing of the Fuel Measuring Stick paragraph.

S 434-040
(7) Install the fuel measuring stick (1) per the Install the Fuel Measuring Stick paragraph.

BOEING PROPRIETARY - Copyright (C) - Unpublished Work - See title page for details.