STATION		BOEING CARD NO.
TAIL NO.	SAS BOEING 767 TASK CARD	23-001-01
DATE		AIRLINE CARD NO.

SKILL	WORK AREA	RELATED TASK	INTERVAL	PHASE	MPD REV	TASK CARD REVISION
ELECT	PASS CABIN		2C	12424	011	DEC 22/05

TASK	TITLE	STRUCTURAL ILLUSTRATION REFERENCE	APPLICABILITY AIRPLANE	APPLICABILITY ENGINE
FUNCTIONAL	SPEAKER SYSTEM		PASS	ALL

ZONES	ACCESS PANELS
119 200	119AL

MECH	INSP	MPD ITEM NUMBER

FUNCTIONALLY CHECK (ON AIRCRAFT) SPEAKER SYSTEM, INCLUDING PA OVERRIDE. 23-31-00-5A

(1) Do these steps to do a test of the passenger entertainment override:

(a) Do these steps at the forward attendant's panel, P21:

1) Push the PASS ENT SYST PWR switch-light.

a) Make sure the switch-light is on.

2) Push the PASS SERV SYST PWR switch-light.

a) Make sure the switch-light is on.

(b) Do these test steps for a seat in the forward passenger zone:

1) At a seat in the forward passenger zone, use a headset to make sure you hear the passenger entertainment.

2) Do these steps at an attendant's handset to make an announcement on the PA system:

a) Push the PA switch

b) Push and hold the PTT switch

c) Speak into the handset.

3) Make sure the passenger entertainment stops and that you hear the announcement clearly in the headset.

4) Release the handset PTT switch.

5) Make sure you hear the passenger entertainment in the headset.

BOEING PROPRIETARY - Copyright (C) - Unpublished Work - See title page for details.

(c) Do the test steps again for a seat in the mid passenger zone.

(d) Do the test steps again for a seat in the aft passenger zone.

(2) Do these steps to make sure voice announcements are clear (this test includes override and muted speakers):

NOTE: Make sure there is no feedback with the voice announcements.

(a) Continue the operation of the boarding music.

(b) Lift the forward attendant's handset.

(c) Do these steps to do a test of the handset:

1) Push the PA switch.

2) Push and hold the PTT switch.

3) Make sure the video or boarding music audio stops without much of a click.

4) Speak into the handset microphone and make sure the announcement is heard clearly in the passenger cabin.

5) At each audio selector panel, set the PA LISTEN switch on PA.

6) Make sure the announcement is heard by each of the flight crew through their headsets.

7) Release the handset PTT switch.

8) Put the handset back in the holder.

9) Make sure you can hear the video or boarding music audio.

(d) Do the procedure, do these steps to do a test of the handset, at these locations:

1) The purser's station

2) The forward right attendant handset

3) The aft left attendant handset

BOEING PROPRIETARY - Copyright (C) - Unpublished Work - See title page for details.

MECH	INSP

4) The aft right attendant handset.

(e) Do these steps to do a test of the pilots' handset.

1) Lift the pilots' handset from the holder.

2) Push the PA switch.

3) Push and hold the PTT switch.

4) Speak into the handset.

5) Make sure the announcement is heard clearly in the passenger cabin.

6) ALL SAS AIRPLANES;

During the announcement from pilots' handset, make sure an announcement cannot be made from an attendant or purser handset.

7) Release the handset PTT switch.

8) Put the pilots' handset back in the holder.

(f) Open this circuit breaker on the P11 panel, and attach a DO-NOT-CLOSE tag:

1) 11C23, INTERPHONE CABIN SERVICE

(g) Do these steps at each handset:

1) Lift the handset from the holder.

2) Push and hold the PTT switch.

3) Do not push the PA switch and make sure you can make an announcement.

4) Release the handset PTT switch.

5) Put the handset back in the holder.

(h) Remove the DO-NOT-CLOSE tag and close this circuit breaker on the P11 panel:

1) 11C23, INTERPHONE CABIN SERVICE

BOEING PROPRIETARY - Copyright (C) - Unpublished Work - See title page for details.

MECH | INSP

(i) Do these steps at each jack panel:

1) Push and hold the PA MIC switch to the PA MIC position.

2) Use the boom microphone to make a voice announcement.

3) Make sure the announcement is heard clearly in the passenger cabin.

4) Make sure a sidetone is heard in the headset.

5) Set the BOOM/OXY switch to the BOOM position on the audio selector panel.

6) While the headphones are on, use the oxygen mask microphone to make a voice announcement.

a) Make sure the announcement is heard clearly in the passenger cabin.

b) Make sure you hear a sidetone in the headset.

7) Put the oxygen mask back in the holder.

8) Close the stowage doors.

9) Push the reset test switch.

1. Speaker Output Level Adjustment

NOTE: This is a scheduled maintenance task.

A. References

(1) AMM 23-42-00/501, Cabin Interphone

(2) AMM 23-51-00/501, Flight Interphone

(3) AMM 24-22-00/201, Electrical Power - Control

B. Equipment

(1) Random noise generator - 543-1, Pacific Electro Dynamics, 11465 Willows Rd. N.E., Redmond, WA 98052

BOEING PROPRIETARY - Copyright (C) - Unpublished Work - See title page for details.

MECH	INSP

(2) Adapter Cable, Random noise generator - Local manufacture - per Pacific Electro Dynamics Random Noise Generator Service Manual

(3) AC voltmeter, capable of reading 1.0 ±0.05 volts rms

(4) Sound Level Meter - GR 1565, Genrad Inc., 300 Baker Av., Concord, MA 01742

(5) Headset - Electrical or Pneumatic (Stethoscope) as required - commercially available

C. Prepare for Speaker Output Level Adjustment

(1) Supply electrical power (AMM 24-22-00/201).

(2) Make sure the cabin interphone system is serviceable (AMM 23-42-00/501).

(3) Make sure the flight interphone system is serviceable (AMM 23-51-00/501).

(4) Make sure these circuit breakers are closed on the overhead circuit breaker panel, P11:

(a) 11C22, PASS ADRS

(b) 11P9, PASS SIGN CONT

(c) 11T8, PASS ENTMT/SERVICE CONT

(d) 11T34, VIDEO PROJ

(5) Make sure these circuit breakers are closed on the left miscellaneous electrical equipment panel, P36:

(a) 36J5, MUX/TAPE REPRO

(b) MTH 281-999;

36J6, PRE-RECD ANNCT

(c) SAS ALL;
MTH 275-280;

36J7, PRE-RECD ANNCT

BOEING PROPRIETARY - Copyright (C) - Unpublished Work - See title page for details.

(6) MTH 281-999;

Make sure these circuit breakers are closed on the right miscellaneous electrical equipment panel, P37:

(a) 37J6, AFT CTD

(b) 37J7, FWD CTD

(7) SAS ALL;
MTH 275-280;

Make sure these circuit breakers are closed on the right miscellaneous electrical equipment panel, P37:

(a) 37K1, FWD CTD

(b) 37K2, AFT CTD

(8) Make sure this circuit breaker is closed on the P37 panel:

(a) SAS ALL;

37K5, FWD VIDEO PROJECTOR PASS ENTERTAINMENT

D. Speaker Output Level Adjustment

(1) Do these steps to do a test of the speaker sound level:

(a) Do these steps to calibrate the random noise generator:

1) Connect the AC voltmeter to the SIGNAL OUTPUT jacks on the random noise generator.

2) On the random noise generator, set the PWR/PTT switch to the ON position.

3) Set the OUTPUT switch to the SIG position.

a) Make sure 1.0 ±0.05 volts rms is shown on the AC voltmeter.

4) Adjust the SIGNAL ADJUST potentiometer (found on the end of the random noise generator) if necessary.

BOEING PROPRIETARY - Copyright (C) - Unpublished Work - See title page for details.

(b) At the captain's or the first officer's sidewall, use an adapter cable to connect the random noise generator to the hand microphone jack (Fig. 501).

(c) Set the PWR/PTT switch to the ON position on the random noise generator.

(d) Set the OUTPUT switch to the SIG position on the random noise generator.

(e) At each jack panel, push and hold the PA MIC switch to the PA MIC position.

(f) Set the sound level meter to the SLOW and "C" positions.

(g) Do these steps to do a test of a speaker output level:

1) Slowly move the sound level meter across the speaker panel.

2) Identify the highest value on the sound level meter.

NOTE: These are the recommended sound levels for each PA speaker:

PSU	109 ± 2db
Galley - Fwd ceiling	112 ± 2db
Galley - Aft ceiling	115 ± 2db
Attendant - ceiling	106 ± 2db
Lavatory	109 ± 2db

(h) Adjust the speaker output level, if necessary (Fig. 502).

(i) Do these steps to adjust the PA LEVEL control screw on the front of the audio accessory unit M108 installed on shelf E2-5 in the main equipment center:

1) Turn the control screw clockwise to increase the speaker output level.

BOEING PROPRIETARY - Copyright (C) - Unpublished Work - See title page for details.

2) Turn the control screw counterclockwise to decrease the speaker output level.

E. Put the Airplane Back to Its Initial Condition

(1) Put all of the handsets back in their holders.

(2) Put all of the circuit breakers back to their usual condition.

(3) Put all of the audio selector panels back to their usual condition.

(4) Remove this test equipment:

(a) The random noise generator

(b) The sound level meter.

(5) Do these steps at the forward attendant's panel, P21:

(a) Push the PASS ENT SYST PWR switch-light to the off position (the light goes off).

(b) Push the PASS SERV SYST PWR switch-light to the off position (the light goes off).

(6) Remove electrical power if it is not necessary (AMM 24-22-00/201).

BOEING PROPRIETARY - Copyright (C) - Unpublished Work - See title page for details.

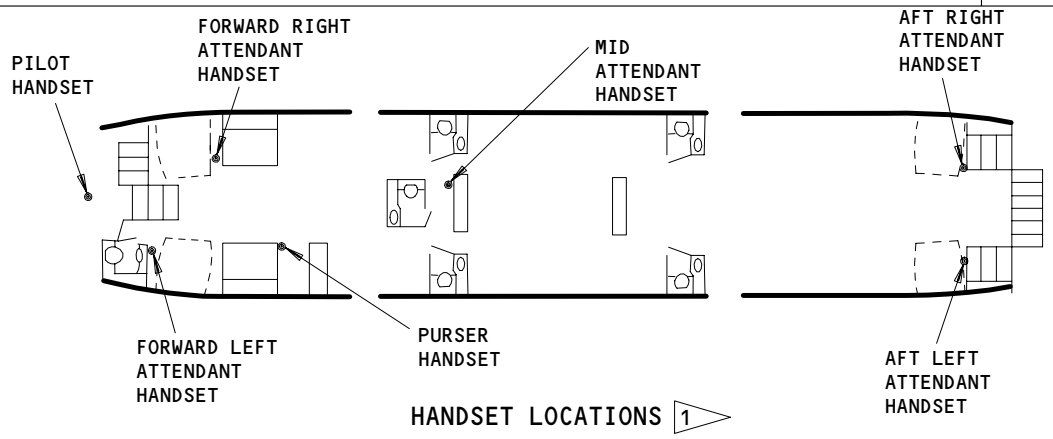

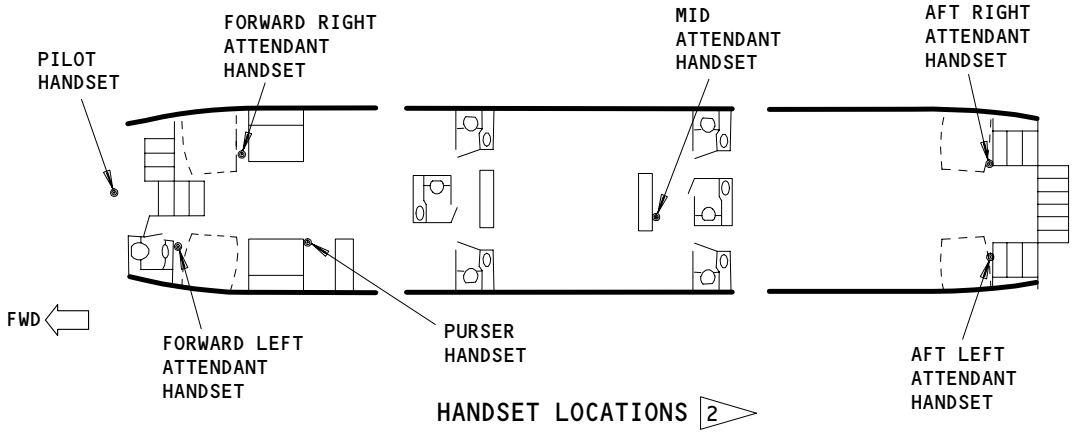

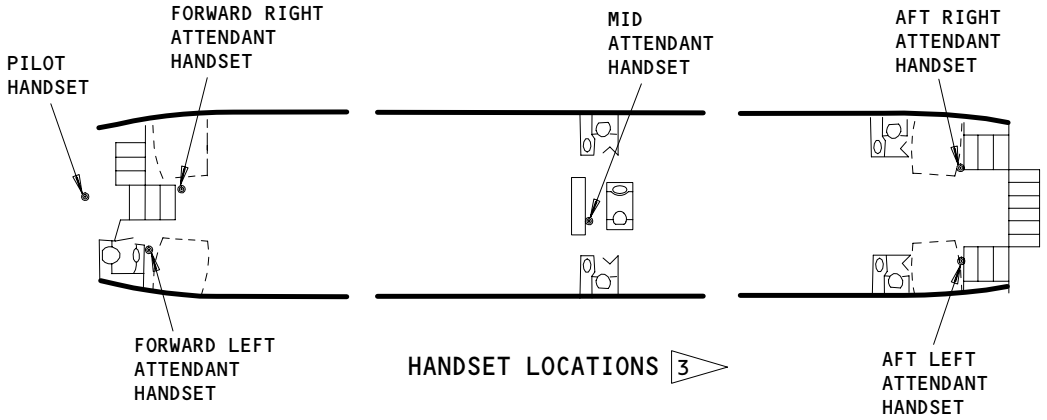

1 ALL SAS 767-200 AIRPLANES
2 ALL SAS 767-300 AIRPLANES
3 ALL MTH AIRPLANES

Passenger Address System Component Location
Figure 501 (Sheet 1)

BOEING PROPRIETARY - Copyright (C) - Unpublished Work - See title page for details.

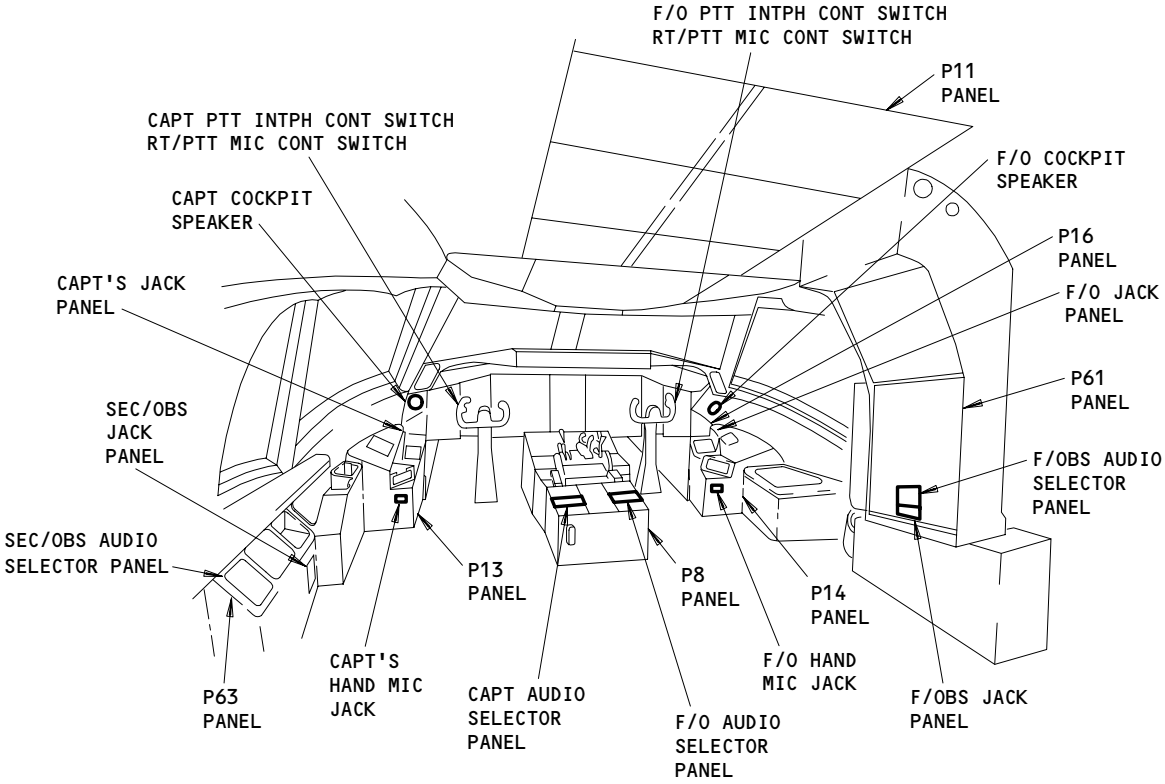

AUDIO SELECTOR PANEL LOCATIONS

Passenger Address System Component Location
Figure 501 (Sheet 2)

BOEING PROPRIETARY - Copyright (C) - Unpublished Work - See title page for details.

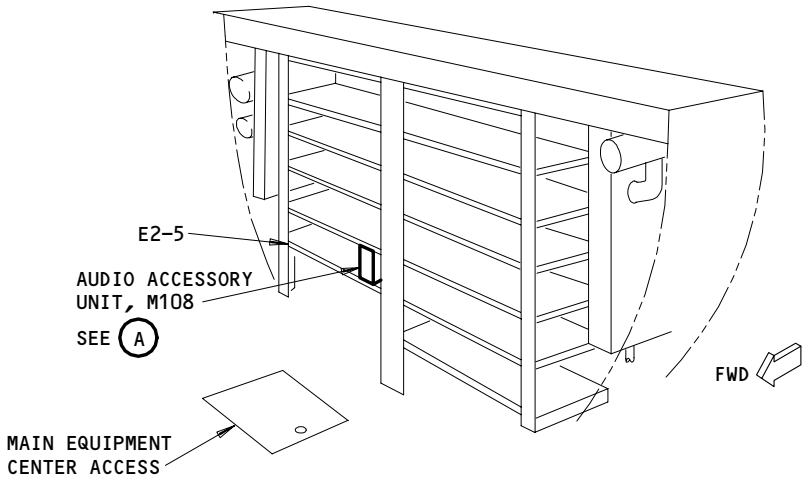

MAIN EQUIPMENT CENTER

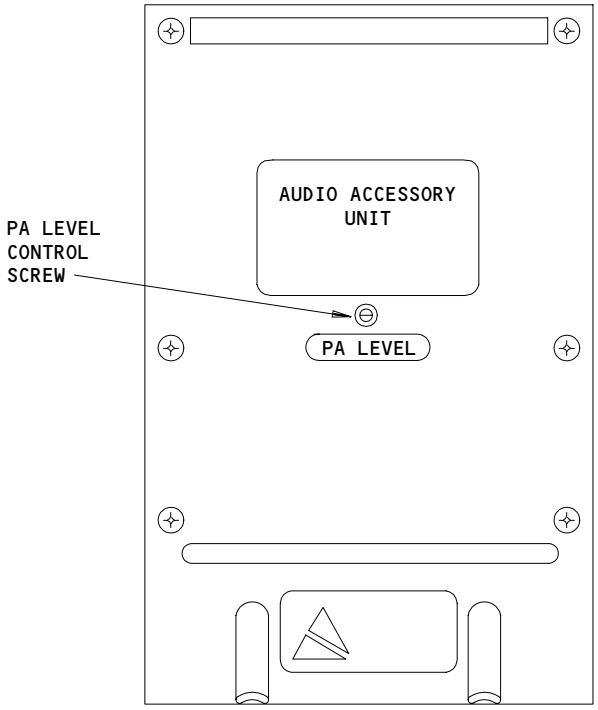

AUDIO ACCESSORY UNIT

A

Passenger Address System Component Location
Figure 502

BOEING PROPRIETARY - Copyright (C) - Unpublished Work - See title page for details.

STATION		BOEING CARD NO.
TAIL NO.	SAS BOEING 767 TASK CARD	23-002-01
DATE		AIRLINE CARD NO.

SKILL	WORK AREA	RELATED TASK	INTERVAL	PHASE	MPD REV	TASK CARD REVISION
ELECT	AIRPLANE		3C	13636	007	AUG 22/09

TASK	TITLE	STRUCTURAL ILLUSTRATION REFERENCE	APPLICABILITY AIRPLANE	APPLICABILITY ENGINE
FUNCTIONAL	STATIC DISCHARGERS		ALL	ALL

ZONES	ACCESS PANELS
325 326 336 337 338 346 347 348 544 567 644 667	

MECH	INSP	MPD ITEM NUMBER

INSPECT AND FUNCTIONALLY CHECK STATIC DISCHARGERS CAPABILITY (ON AIRCRAFT) TO DISSIPATE PRECIPITATION STATIC. 23-61-01-2A

1. Static Discharger Inspection/Check (Fig. 201)

A. References

(1) AMM 24-22-00/201, Manual Control

(2) AMM 29-11-00/201, Main (Left, Right, Center) Hydraulic Systems

B. Deactivate the Flight Control Surface Movement

WARNING: MAKE SURE PRESSURE IS REMOVED FROM HYDRAULIC SYSTEM. MAKE SURE HYDRAULIC POWER AND ELECTRICAL POWER ARE NOT SUPPLIED. IF HYDRAULIC PRESSURE IS PRESENT OR HYDRAULIC/ELECTRICAL POWER IS SUPPLIED, THE FLIGHT CONTROL SURFACES CAN MOVE. THIS CAN CAUSE INJURY TO PERSONS OR DAMAGE TO EQUIPMENT.

(1) Remove the pressure and power from the Main Hydraulic System (AMM 29-11-00/201).

(2) Remove the power from the electrical system (AMM 24-22-00/201).

C. Procedure

(1) Visually make sure all dischargers are not broken and are tight on their bases.

(a) Examine dischargers for lightning damage (burned or pitted discharger base). Replace discharger if necessary.

(2) Examine dischargers for broken, bent, or missing tips. If repair is not possible replace the discharger.

BOEING PROPRIETARY - Copyright (C) - Unpublished Work - See title page for details.

(3) Do this task to measure the resistance of all dischargers between the discharger tip and the discharger base: Static Discharger Test (AMM 23-61-01/201).

(4) Do this task to measure the resistance of all dischargers between the discharger base and the airplane surface: Static Discharger Base Inspection/Check (AMM 23-61-01/201).

D. Put the Airplane Back to Its Usual Condition

(1) If it is necessary, put the airplane to its usual condition (AMM 29-11-00/201).

2. Static Discharger Test

(1) AMM 24-22-00/201, Manual Control

(2) AMM 29-11-00/201, Main (Left, Right, Center) Hydraulic Systems

A. Equipment

(1) 1863 Megohmmeter (or equivalent)
Quadtech Inc. (Vendor Code 0PK96)
100 Nickerson Ave., Marlborough, MA 01752

(2) Bonding Meter (SWPM 20-20-00)

B. Consumable Materials

(1) G00034 Cloth cotton, lint free

C. Deactivate the Flight Control Surface Movement

WARNING: MAKE SURE PRESSURE IS REMOVED FROM HYDRAULIC SYSTEM. MAKE SURE HYDRAULIC POWER AND ELECTRICAL POWER ARE NOT SUPPLIED. IF HYDRAULIC PRESSURE IS PRESENT OR HYDRAULIC/ELECTRICAL POWER IS SUPPLIED, THE FLIGHT CONTROL SURFACES CAN MOVE. THIS CAN CAUSE INJURY TO PERSONS OR DAMAGE TO EQUIPMENT.

(1) Remove the pressure and power from the Main Hydraulic System (AMM 29-11-00/201).

(2) Remove the power from the electrical system (AMM 24-22-00/201).

D. Procedure

BOEING PROPRIETARY - Copyright (C) - Unpublished Work - See title page for details.

MECH	INSP

WARNING: DO NOT USE A MEGOHMMETER NEAR A FUEL TANK VENT. IT IS POSSIBLE THAT AN EXPLOSION OR FIRE CAN OCCUR.

(1) If you must do a resistance check for a static discharger that is in a five foot diameter area around a fuel tank vent, then do these tasks:

(a) Static Discharger Removal

(b) Static Discharger Installation.

(2) Discharger Resistance Test

WARNING: USE THE PRECAUTIONS THAT FOLLOW WHEN YOU USE A MEGOHMMETER. IF YOU DO NOT USE PRECAUTIONS, THEN IT IS POSSIBLE THAT AN EXPLOSION OR FIRE CAN OCCUR.

(a) Use these precautions for possible fuel vapors when you use a megohmmeter:

1) Use the Quadtech 1863 megohmmeter or equivalent meter with a 500 VDC test voltage and a maximum 5 milliampere short circuit current.

2) Do not use a megohmmeter at these locations:

a) Area adjacent to or below a wing fuel tank vent, five foot (1.524 meters) diameter column, from vent to ground.

b) Zero to 18 inches (457 mm) above the ground in the area around the airplane.

3) Make sure that:

a) Area is well ventilated.

b) Metal workstands are grounded.

c) Megohmmeter is plugged into a grounded receptacle.

d) Megohmmeter is insulated from metal work stands.

BOEING PROPRIETARY - Copyright (C) - Unpublished Work - See title page for details.

(b) To measure the resistance between the discharger tip and base, do the steps that follow:

1) AIRPLANES WITH DAYTON-GRANGER AND OTHER STATIC DISCHARGERS NOT SUPPLIED BY CHELTON;
Put the wet material on the END of the discharger tip.

2) AIRPLANES WITH CHELTON SUPPLIED STATIC DISCHARGERS;
Put the wet material on the END of the discharger tip.

NOTE: DO NOT wrap the wetted material around the tip of the discharger. Wrapping the wetted material around tip of the discharger can cause erroneous resistance readings resulting in the unnecessary removal of a serviceable static discharger. Place the wetted material between the tip of the discharger and the megger probe. If resistance is not within limits, remove wetted material and place megger probe directly onto tip onto discharger core material and repeat test. Refer to Figure 201, ON WING DISCHARGER RESISTANCE TEST. If you are using the alternate discharger test method, connect the megger probe to the edge of the wetted material as shown in Figure 201, ALTERNATE (OFF WING) DISCHARGER RESISTANCE TEST.

3) Position the megohmmeter leads on the base and on the wet cloth.

4) Make sure the resistance value is between 6-100 megohms.

(3) Replace the dischargers that do not meet the resistance values.

E. Put the Airplane Back to Its Usual Condition

(1) If it is necessary, put the airplane to its usual condition (AMM 29-11-00/201).

3. Static Discharger Base Inspection/Check

A. Equipment

(1) Bonding meter (SWPM 20-20-00)

B. References

BOEING PROPRIETARY - Copyright (C) - Unpublished Work - See title page for details.

(1) AMM 24-22-00/201, Manual Control

(2) AMM 29-11-00/201, Main (Left, Right, Center) Hydraulic Systems

(3) AMM 51-21-10/701, Decorative Exterior Finishes

C. Deactivate the Flight Control Surface Movement

WARNING: MAKE SURE PRESSURE IS REMOVED FROM HYDRAULIC SYSTEM. MAKE SURE HYDRAULIC POWER AND ELECTRICAL POWER ARE NOT SUPPLIED. IF HYDRAULIC PRESSURE IS PRESENT OR HYDRAULIC/ELECTRICAL POWER IS SUPPLIED, THE FLIGHT CONTROL SURFACES CAN MOVE. THIS CAN CAUSE INJURY TO PERSONS OR DAMAGE TO EQUIPMENT.

(1) Remove the pressure and power from the Main Hydraulic System (AMM 29-11-00/201).

(2) Remove the power from the electrical system (AMM 24-22-00/201).

D. Procedure

WARNING: MAKE SURE THAT THE BONDING METER IS RESISTANT TO EXPLOSION. IF NOT, IT IS POSSIBLE THAT AN EXPLOSION OR FIRE CAN OCCUR.

(1) Use a bonding meter (SWPM 20-20-00) to do a check of the static discharger bond between the discharger bases and airplane surface.

(2) Use method 1 or method 2 to measure the bond resistance.

(a) Method 1 - Use a bonding meter (SWPM 20-20-00) to measure the dc resistance between the static discharger base and the bonded airplane surface:

BOEING PROPRIETARY - Copyright (C) - Unpublished Work - See title page for details.

NOTE: This resistance measurement is for in-service bonds and static discharger bases. There is a different measurement value for newly installed static discharger bases and bonds.

Make sure both meter leads touch bare metal. If a surface is coated with paint, you can scrape off a small amount of paint or use a sharp probe to penetrate the paint.

1) Do the test as follows:

a) Put one meter lead on the discharger base.

b) Put one meter lead on the airplane surface.

2) ALUMINUM DISCHARGER BASE ON ALUMINUM OR ALUMINUM FLAME-SPRAYED SURFACE;
Make sure the resistance is not more than 0.5 ohms.

CAUTION: BE CAREFUL WHEN YOU CLEAN THE ALUMINUM SURFACE. DAMAGE TO ALUMINUM COATING CAN OCCUR.

a) If it is necessary, clean the flame-sprayed surface with Scotch Brite.

3) TITANIUM DISCHARGER BASE ON A CARBON COMPOSITE SURFACE;
Make sure the resistance value is not more than 5.0 ohms.

4) If it is necessary, paint the area where the paint was removed for the test (AMM 51-21-10/701).

(b) Method 2 - Use a bonding meter (SWPM 20-20-00) to do a check of the bond resistance between two adjacent discharger bases.

BOEING PROPRIETARY - Copyright (C) - Unpublished Work - See title page for details.

NOTE: This resistance measurement is for in-service bonds and static discharger bases. There is a different measurement value for newly installed static discharger bases and bonds.

Make sure both leads touch bare metal. If a surface is coated with paint, you can scrape off a small amount of paint or use a sharp probe to penetrate the paint.

1) Do the test as follows:

a) Put one meter lead on the discharger base.

b) Put one meter lead on the adjacent discharger base.

2) ALUMINUM DISCHARGER BASE TO ALUMINUM DISCHARGER BASE ON ALUMINUM OR ALUMINUM FLAME-SPRAYED SURFACE;
Make sure the resistance is not more than 0.5 ohm.

3) TITANIUM DISCHARGER BASE TO TITANIUM DISCHARGER BASE ON A CARBON COMPOSITE SURFACE;
Make sure the resistance is not more than 5.0 ohms.

4) If the resistance shows more than the resistance values in Method 2, then do the procedure in Method 1 to find the defective static discharger base.

(c) For discharger bases that do not meet resistance requirements, do the steps that follow:

1) Remove the base.

2) Clean the bonding surfaces.

3) Install or replace the discharger base (refer to the Static Discharger Base Removal/Installation).

E. Put the Airplane Back to Its Usual Condition

(1) If it is necessary, put the airplane to its usual condition (AMM 29-11-00/201).

BOEING PROPRIETARY - Copyright (C) - Unpublished Work - See title page for details.

MECH	INSP

4. Static Discharger Removal (Fig. 201)

NOTE: See FIM 23-61-00/101, Fig. 101 and FIM 23-61-00/101, Fig. 102, for detail location information.

A. References

(1) AMM 24-22-00/201, Manual Control

(2) AMM 29-11-00/201, Main (Left, Right, Center) Hydraulic Systems

B. Deactivate the Flight Control Surface Movement

WARNING: MAKE SURE PRESSURE IS REMOVED FROM HYDRAULIC SYSTEM. MAKE SURE HYDRAULIC POWER AND ELECTRICAL POWER ARE NOT SUPPLIED. IF HYDRAULIC PRESSURE IS PRESENT OR HYDRAULIC/ELECTRICAL POWER IS SUPPLIED, THE FLIGHT CONTROL SURFACES CAN MOVE. THIS CAN CAUSE INJURY TO PERSONS OR DAMAGE TO EQUIPMENT.

(1) Remove the pressure and power from the Main Hydraulic System (AMM 29-11-00/201).

(2) Remove the power from the electrical system (AMM 24-22-00/201).

C. Removal of Trailing Edge Type Static Discharger

(1) Loosen the setscrew four or five turns on the discharger.

(2) Put a thin-bladed tool between the discharger casting and the discharger base.

(a) Pry on the discharger and pull out on the sides of the discharger casting to remove the discharger from base.

D. Removal of Tip Type Static Discharger

(1) Loosen the setscrew three or four turns on the rear of the discharger base.

(2) Put a small blade between the end of the discharger casting and the base.

BOEING PROPRIETARY - Copyright (C) - Unpublished Work - See title page for details.

MECH | INSP

(a) Pry on the discharger and pull on the rod as near as possible to the base.

E. Put the Airplane Back to Its Usual Condition

(1) If it is necessary, put the airplane to its usual condition (AMM 29-11-00/201).

5. Static Discharger Installation

A. References

(1) AMM 24-22-00/201, Manual Control

(2) AMM 29-11-00/201, Main (Left, Right, Center) Hydraulic Systems

B. Equipment

(1) 1863 Megohmmeter (or equivalent)
Quadtech Inc. (Vendor Code 0PK96)
100 Nickerson Ave., Marlborough, MA 01752

(2) Bonding Meter (SWPM 20-20-00)

C. Consumables

(1) A00313 Loctite 242

(2) G00034 Cloth cotton, lint free

D. Deactivate the Flight Control Surface Movement

WARNING: MAKE SURE PRESSURE IS REMOVED FROM HYDRAULIC SYSTEM. MAKE SURE HYDRAULIC POWER AND ELECTRICAL POWER ARE NOT SUPPLIED. IF HYDRAULIC PRESSURE IS PRESENT OR HYDRAULIC/ELECTRICAL POWER IS SUPPLIED, THE FLIGHT CONTROL SURFACES CAN MOVE. THIS CAN CAUSE INJURY TO PERSONS OR DAMAGE TO EQUIPMENT.

(1) Remove the pressure and power from the Main Hydraulic System (AMM 29-11-00/201).

(2) Remove the power from the electrical system (AMM 24-22-00/201).

E. Static Discharger Inspection Test

BOEING PROPRIETARY - Copyright (C) - Unpublished Work - See title page for details.

MECH	INSP

(1) Use the megohmmeter to measure the resistance between static discharger tip and static discharger shank before you install the static discharger.

WARNING: USE THE PRECAUTIONS THAT FOLLOW WHEN YOU USE A MEGOHMMETER. IF YOU DO NOT USE PRECAUTIONS, THEN IT IS POSSIBLE THAT AN EXPLOSION OR FIRE CAN OCCUR.

(a) Use these precautions for possible fuel vapors when you use a megohmmeter:

1) Use the Quadtech 1863 megohmmeter or equivalent meter with a 500 VDC test voltage and a maximum 5 milliampere short circuit current.

2) Do not use a megohmmeter at these locations:

a) Area adjacent to or below a wing fuel tank vent, five foot (1.524 meters) diameter column, from vent to ground.

b) Zero to 18 inches (457 mm) above the ground in the area around the airplane.

3) Make sure that:

a) Area is well ventilated.

b) Metal workstands are grounded.

c) Megohmmeter is plugged into a grounded receptacle.

d) Megohmmeter is insulated from metal work stands.

(b) To measure the resistance between the discharger tip and shank, do the steps that follow:

1) AIRPLANES WITH DAYTON-GRANGER AND OTHER STATIC DISCHARGERS NOT SUPPLIED BY CHELTON;
Put the wet material on the END of the discharger tip.

BOEING PROPRIETARY - Copyright (C) - Unpublished Work - See title page for details.

2) AIRPLANES WITH CHELTON SUPPLIED STATIC DISCHARGERS;
Put the wet material on the END of the discharger tip.

NOTE: DO NOT wrap the wetted material around the tip of the discharger. Wrapping the wetted material around tip of the discharger can cause erroneous resistance readings resulting in the unnecessary removal of a serviceable static discharger. Place the wetted material between the tip of the discharger and the megger probe. If resistance is not within limits, remove wetted material and place megger probe directly onto tip of discharger core material and repeat test. If you are using the alternate discharger test method, connect the megger probe to the edge of the wetted material.

3) Position the megohmmeter leads on the static discharger shank and on the wet cloth.

4) Make sure the resistance value is between 6-100 megohms.

(2) Alternative Discharger Resistance Test.

NOTE: This test is for a static discharger that is near a fuel tank vent, but can alos be used for static dischargers at other locations as well.

(a) Static Discharger Removal.

(b) Move the discharger to a safe location to use the megohmmeter.

(c) Use the megohmmeter to measure the resistance between the discharger tip and the discharger shank (S732-140).

(d) Static Discharger Installation.

WARNING: MAKE SURE THAT THE BONDING METER IS RESISTANT TO EXPLOSION. IF NOT, IT IS POSSIBLE THAT AN EXPLOSION OR FIRE CAN OCCUR.

(e) FOR METALLIC SHANK STATIC DISCHARGERS ONLY;
Use a bonding meter (SWPM 20-20-00) to measure the resistance between the discharger shank and the discharger base.

BOEING PROPRIETARY - Copyright (C) - Unpublished Work - See title page for details.

1) Make sure that the resistance is not more than 1 ohm.

(f) FOR PLASTIC SHANK STATIC DISCHARGERS ONLY;
Use a bonding meter (SWPM 20-20-00) to measure the resistance between the set screw in the discharger shank and the discharger base.

1) Make sure that the resistance is not more than 1 ohm.

F. Installation of Trailing Edge Type Static Discharger

(1) Make sure that the mating surfaces of the static discharger and the discharger base are clean.

(2) Remove the setscrew from the static discharger.

(3) For static dischargers without a Ny-loc insert in the mounting hole and static dischargers that are not plastic-based material, do this step:

(4) Install the setscrew on the static discharger.

(5) Adjust the setscrew until it makes a continuous surface with the static discharger casting.

(6) Install the discharger over the discharger base with an even pressure on the discharger casting until correctly in position.

(a) Tighten the static discharger setscrew:

1) AIRPLANES WITH 2-14SC1, 2-16SC1, 740007, 80-1746-2, 80-1828-2 STATIC DISCHARGERS;
Tighten it to 7.5 ±1.5 inch-pounds.

2) AIRPLANES WITH 10-900-21, 10-900-25 STATIC DISCHARGERS;
Tighten it to 2.5 inch-pounds.

3) AIRPLANES WITH 16785, 740001, 16305 STATIC DISCHARGERS;
Tighten it to 5 inch-pounds.

(b) Make sure there is no movement between the static discharger and the discharger base.

G. Installation of Tip Type Static Discharger

(1) Make sure that the mating surfaces of the static discharger and the discharger base are clean.

BOEING PROPRIETARY - Copyright (C) - Unpublished Work - See title page for details.

(2) Remove the setscrew from the static discharger base.

(3) Install the setscrew in the discharger base.

(4) Adjust the setscrew until it makes a continuous surface with the discharger base.

(5) Put the discharger casting into the cavity of the discharger base.

(a) Tighten the static discharger setscrew:

1) AIRPLANES WITH 2-14SC1, 2-16SC1, 740007, 80-1746-2, 80-1828-2 STATIC DISCHARGERS;
Tighten it to 7.5 ±1.5 inch-pounds.

2) AIRPLANES WITH 10-900-21, 10-900-25 STATIC DISCHARGERS;
Tighten it to 2.5 inch-pounds.

3) AIRPLANES WITH 16785, 740001, 16305 STATIC DISCHARGERS;
Tighten it to 5 inch-pounds.

(b) Make sure there is no movement between the static discharger and the discharger base.

H. Static Discharger Installation Test

WARNING: MAKE SURE THAT THE BONDING METER IS RESISTANT TO EXPLOSION. IF NOT, IT IS POSSIBLE THAT AN EXPLOSION OR FIRE CAN OCCUR.

(1) ALL STATIC DISCHARGERS EXCEPT P/N 10-900-21 AND 10-900-25;
Use a bonding meter (SWPM 20-20-00) to measure the resistance between the shank of the discharger and the static discharger base.

(a) Maximum resistance value is 1 ohm.

(2) STATIC DISCHARGERS P/N 10-900-21 AND 10-900-25;
If the static discharger is not in a 5-foot diameter area around a fuel tank vent, then do this step:

(a) Do this paragraph again: Static Discharger Inspection Test, but do the test between the discharger tip and the discharger base.

I. Put the Airplane Back to Its Usual Condition

BOEING PROPRIETARY - Copyright (C) - Unpublished Work - See title page for details.

MECH	INSP

(1) If it is necessary, put the airplane to its usual condition (AMM 29-11-00/201).

BOEING PROPRIETARY - Copyright (C) - Unpublished Work - See title page for details.

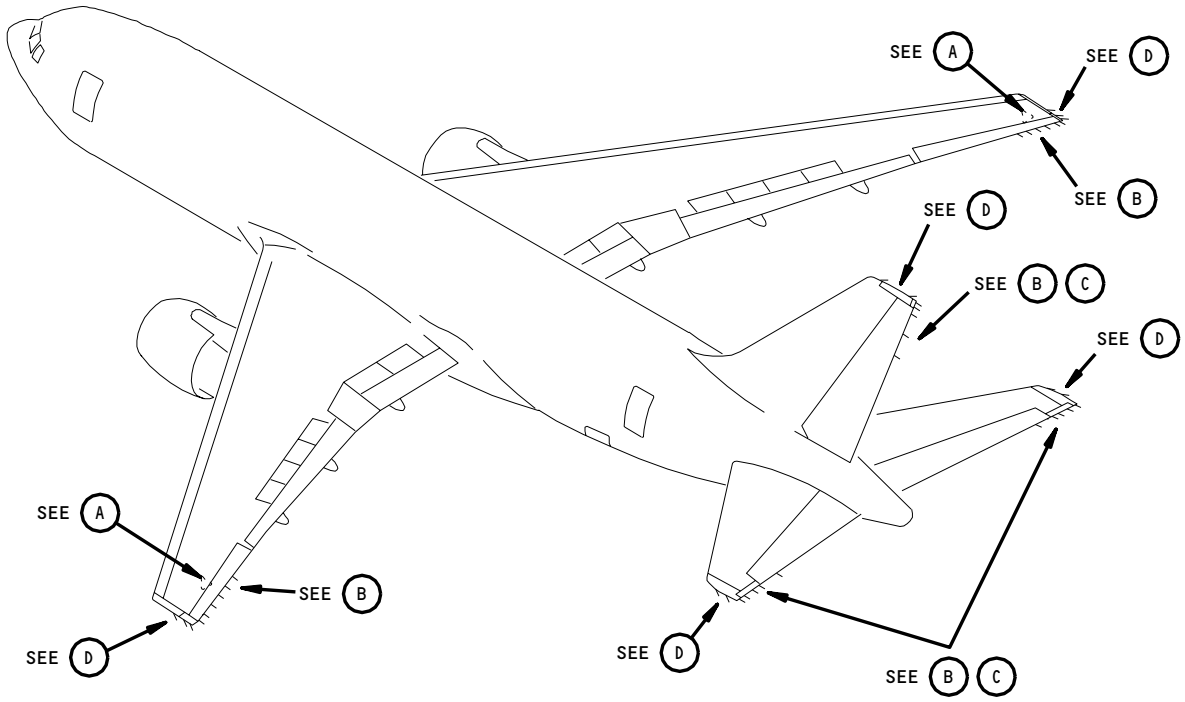

Static Discharger Locations
Figure 201 (Sheet 1)

BOEING PROPRIETARY - Copyright (C) - Unpublished Work - See title page for details.

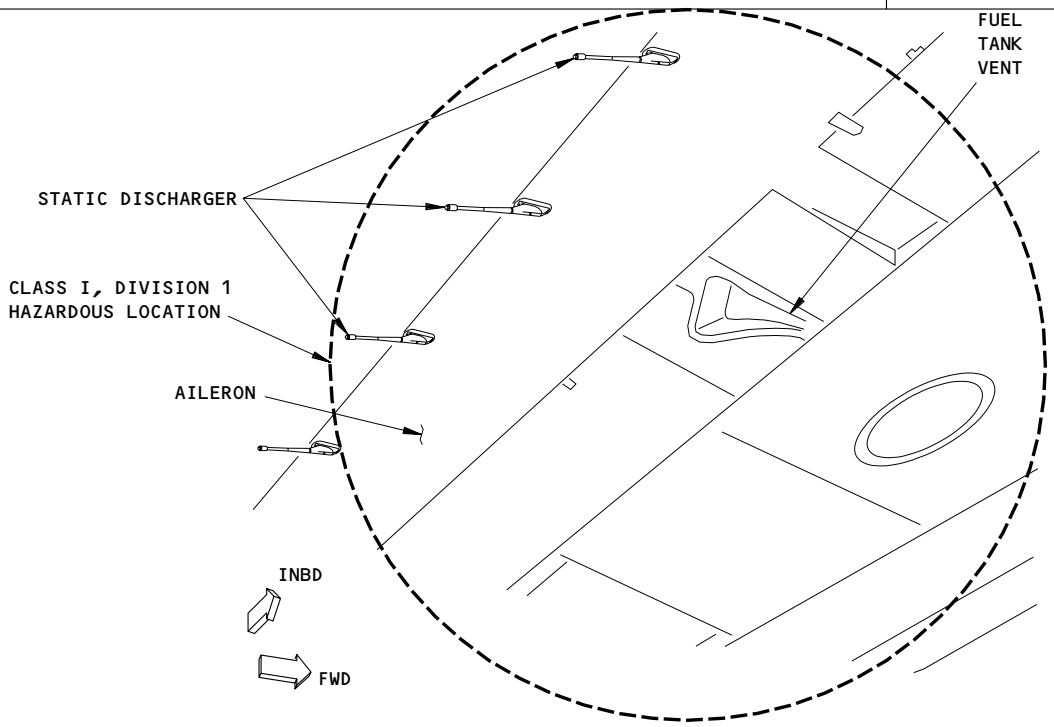

LEFT WING
(RIGHT WING IS OPPOSITE)

A

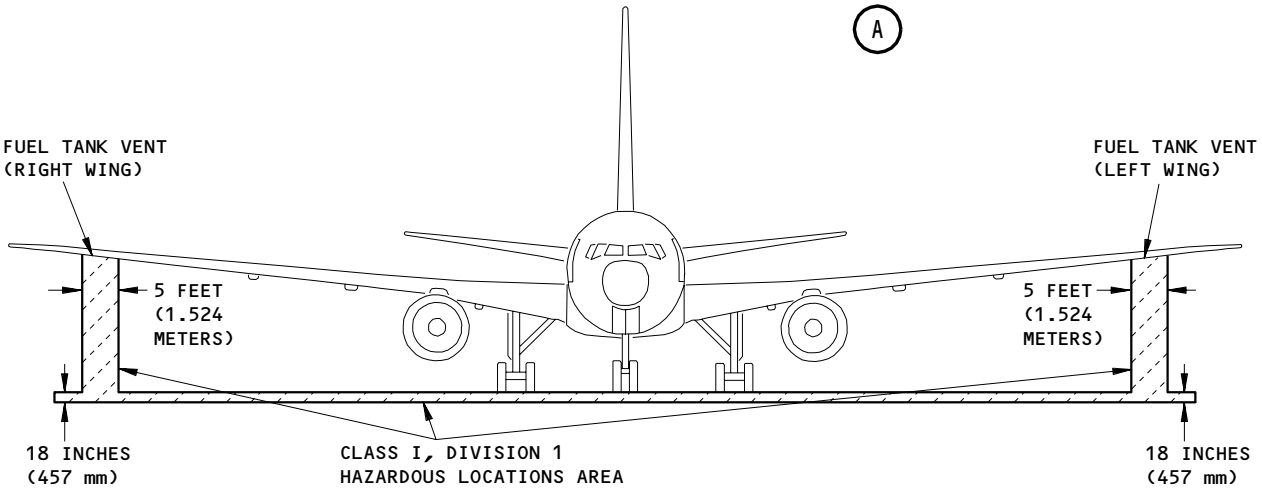

CLASS I, DIVISION 1 HAZARDOUS LOCATIONS
(CLOSED FUEL TANK) 1

WARNING: DO NOT USE A MEGOHMMETER TO MEASURE STATIC DISCHARGER RESISTANCE IN A CLASS I, DIVISION 1 HAZARDOUS LOCATION. AN EXPLOSION OR FIRE IS POSSIBLE.

1 REFER TO AMM 28-11-00/201 FOR DEFINITIONS OF HAZARDOUS LOCATIONS

Static Dischargers Location
Figure 201 (Sheet 2)

BOEING PROPRIETARY - Copyright (C) - Unpublished Work - See title page for details.

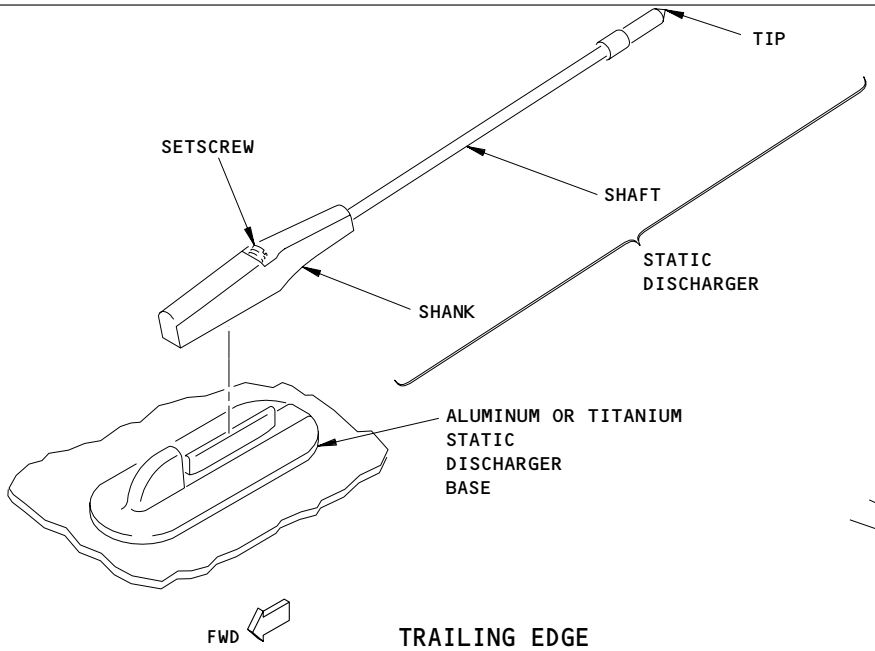

TRAILING EDGE
SURFACE INSTALLATION
(EXAMPLE)

B

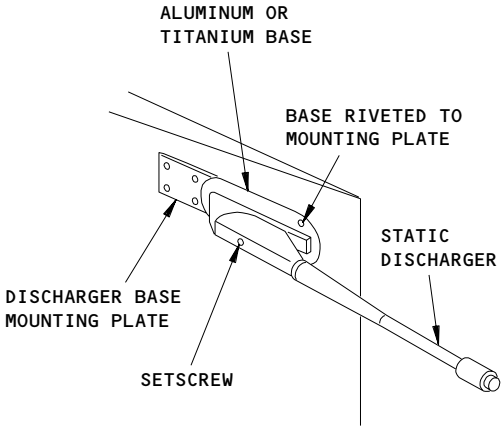

TRAILING EDGE SURFACE
INSTALLATION WITH MOUNTING PLATE
(EXAMPLE)

C

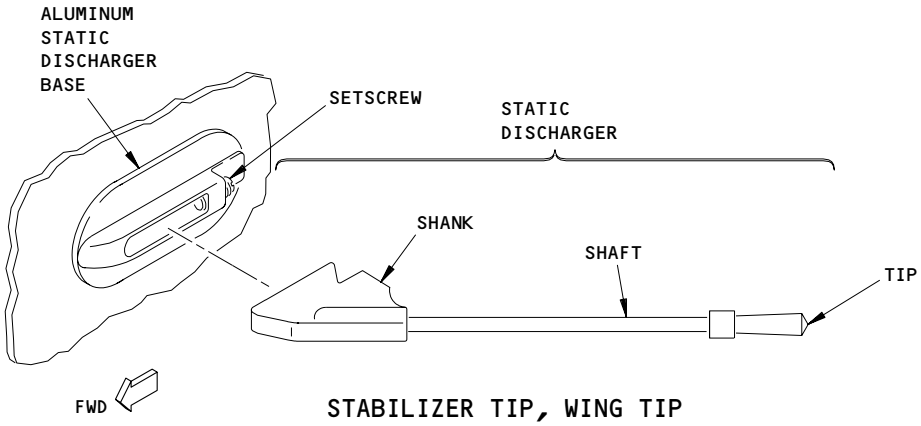

STABILIZER TIP, WING TIP
AND FIN CAP INSTALLATION
(EXAMPLE)

D

Static Discharger Locations
Figure 201 (Sheet 3)

BOEING PROPRIETARY - Copyright (C) - Unpublished Work - See title page for details.

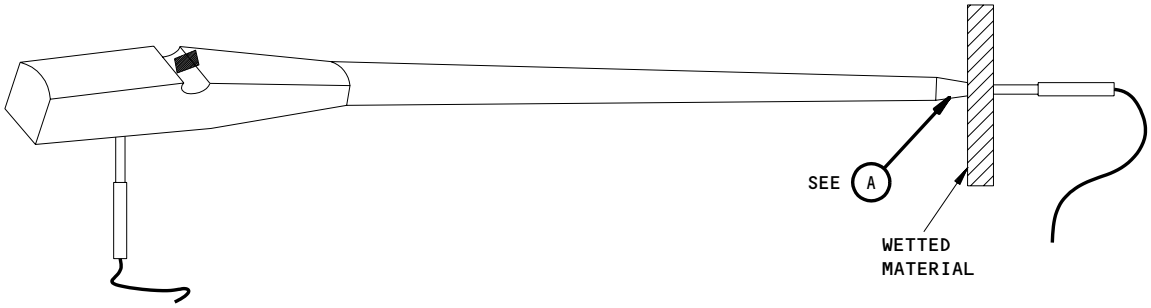

ON WING DISCHARGER RESISTANCE TEST

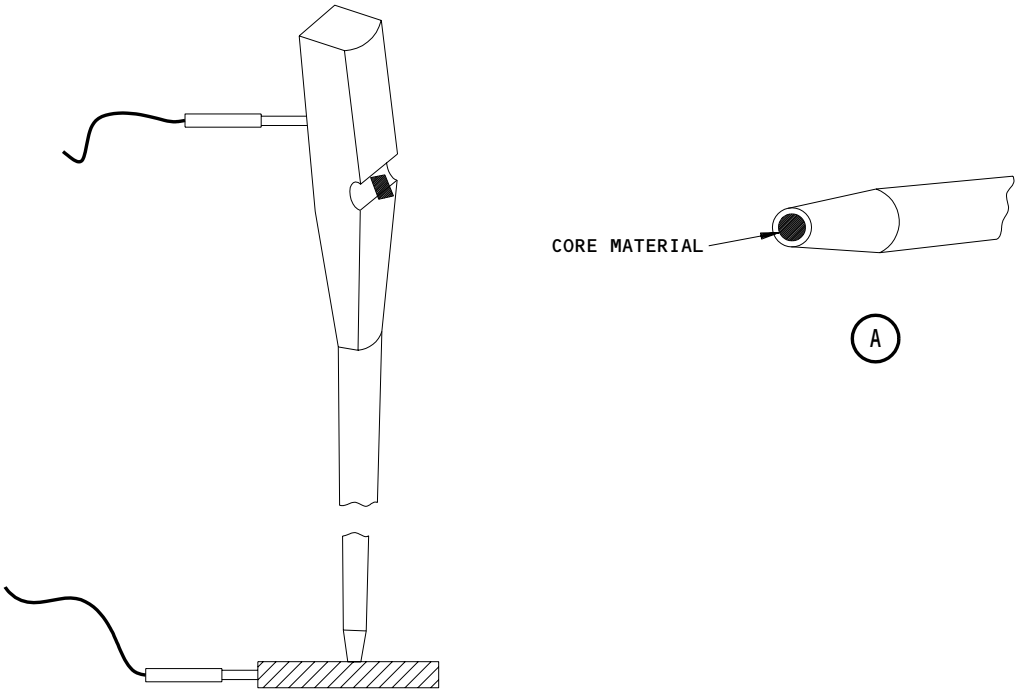

ALTERNATE (OFF WING) DISCHARGER RESISTANCE TEST

NOTE: TEST PROCEDURES FOR THE TRAILING EDGE AND WING TIP DISCHARGERS ARE THE SAME.

Static Discharger Resistance Test
Figure 201A

BOEING PROPRIETARY - Copyright (C) - Unpublished Work - See title page for details.

STATION		BOEING CARD NO.
TAIL NO.	SAS BOEING 767 TASK CARD	23-003-01
DATE		AIRLINE CARD NO.

SKILL	WORK AREA	RELATED TASK	INTERVAL	PHASE	MPD REV	TASK CARD REVISION
AVION	CREW CABIN		1A	10101	012	AUG 22/09

TASK	TITLE	STRUCTURAL ILLUSTRATION REFERENCE	APPLICABILITY AIRPLANE	APPLICABILITY ENGINE
OPERATIONAL	VOICE RECORDER - SELF TEST		ALL	ALL

ZONES	ACCESS PANELS
211	

MECH	INSP	MPD ITEM NUMBER
		23-71-00-5A

OPERATIONALLY CHECK THE VOICE RECORDER OPERATION BY PRESSING "TEST" SWITCH ON COCKPIT VOICE RECORDER PANEL (IF NOT CHECKED BY CREW).

1. Prepare for Operational Test

   A. General

      (1) This task prepares the airplane for the operational test.

   B. References

      (1) 24-22-00/201, Electrical Power - Control

   C. Procedure

      (1) Supply electrical power (AMM 24-22-00/201).

      (2) Do this task: "Voice Recorder Control Panel Test".

2. Voice Recorder Control Panel Test

   A. General

      (1) This task does a test of the Voice Recorder Control Panel.

   B. References

      (1) 24-22-00/201, Electrical Power - Control

   C. Prepare for the test.

      (1) Supply electrical power (AMM 24-22-00/201).

      (2) Connect the 600 ohm headphone to the HEADSET jack on the voice recorder control panel (P5).

BOEING PROPRIETARY - Copyright (C) - Unpublished Work - See title page for details.

MECH	INSP

(3) Do the steps that follow for the operational test:

(a) Push the TEST switch on voice recorder control panel for approximately 1/2 second.

(b) Make sure that the MONITOR light comes on while you push the TEST switch.

(c) Make sure you hear four tones in the headphone while you push the TEST switch.

(4) Remove electrical power if it is not necessary (AMM 24-22-00/201).

(a) Disconnect headphone from the voice recorder control panel.

BOEING PROPRIETARY - Copyright (C) - Unpublished Work - See title page for details.

STATION		BOEING CARD NO.
TAIL NO.	SAS BOEING 767 TASK CARD	23-004-01
DATE		AIRLINE CARD NO.

SKILL	WORK AREA	RELATED TASK	INTERVAL		PHASE	MPD REV	TASK CARD REVISION
AVION	CREW CABIN		1C	NOTE	112XX	013	AUG 22/09

TASK	TITLE	STRUCTURAL ILLUSTRATION REFERENCE	APPLICABILITY AIRPLANE	APPLICABILITY ENGINE
FUNCTIONAL	VOICE RECORDER - 4 CHANNEL OPERATION		ALL	ALL

ZONES	ACCESS PANELS
211 212	

MECH	INSP	MPD ITEM NUMBER

FUNCTIONALLY CHECK VOICE RECORDER FOR PROPER 4-CHANNEL OPERATION. 23-71-00-5B

INTERVAL NOTE: WITH CONCURRENCE OF THE REGULATORY AUTHORITY, OPERATORS MAY USE PRESENTLY APPROVED TIME INTERVALS FOR SCHEDULED MAINTENANCE.

1. <u>System Test - Voice Recorder System</u>

   A. References

      (1) 23-51-00/501, Flight Interphone

      (2) 24-22-00/201, Electrical Power - Control

   B. Prepare for Test

      (1) Supply electrical power (AMM 24-22-00/201).

   C. Four Channel Microphone Tests

      (1) Do the steps that follow for the system test:

         (a) Connect 600 ohm headset to HEADSET jack on voice recorder control panel on the P5 panel.

         (b) Connect boom microphone to captain's jack panel on P15 panel (AMM 23-51-00/501).

         (c) Put a cover on the area microphone on the voice recorder control panel. Speak into the boom microphone.

BOEING PROPRIETARY - Copyright (C) - Unpublished Work - See title page for details.

MECH	INSP

(d) Make sure you hear your voice through the headset at the voice recorder control panel.

NOTE: When you test the digital or solid state voice recorder you will hear your voice in the headset as you speak. When you test the analog or tape based voice recorder you will hear your voice in the headset after approximately a 0.5 second delay.

(e) Disconnect boom microphone from captain's jack panel and connect it to the first officer's jack on the P16 panel.

(f) Speak into the BOOM microphone.

(g) Make sure you hear your voice through the headset at the voice recorder control panel.

NOTE: When you test the digital or solid state voice recorder you will hear your voice in the headset as you speak. When you test the analog or tape based voice recorder you will hear your voice in the headset after approximately a 0.5 second delay.

(h) Disconnect boom microphone from first officer's jack.

(i) Connect boom microphone into first observer's jack panel (P17).

(j) Speak into boom microphone.

(k) Make sure you hear your voice through the headset at the voice recorder control panel.

NOTE: When you test the digital or solid state voice recorder you will hear your voice in the headset as you speak. When you test the analog or tape based voice recorder you will hear your voice in the headset after approximately a 0.5 second delay.

(l) Disconnect boom microphone from first observer's jack panel (P17).

(m) Remove the cover from the area microphone.

BOEING PROPRIETARY - Copyright (C) - Unpublished Work - See title page for details.

MECH	INSP

(n) Speak into the area microphone on the voice recorder control panel from a distance of three to four feet away.

(o) Make sure you hear your voice through the headset at the voice recorder control panel.

NOTE: When you test the digital or solid state voice recorder you will hear your voice in the headset as you speak. When you test the analog or tape based voice recorder you will hear your voice in the headset after approximately a 0.5 second delay.

(p) Set boom microphones to the usual position.

(q) Disconnect the headset from voice recorder control panel.

(2) Remove electrical power if it is not necessary (AMM 24-22-00/201).

BOEING PROPRIETARY - Copyright (C) - Unpublished Work - See title page for details.

STATION		BOEING CARD NO.
TAIL NO.	SAS BOEING 767 TASK CARD	23-005-02
DATE		AIRLINE CARD NO.

SKILL	WORK AREA	RELATED TASK	INTERVAL		PHASE	MPD REV	TASK CARD REVISION
ELECT	PASS CABIN		00006 YRS	NOTE	148XX	014	AUG 22/09

TASK	TITLE	STRUCTURAL ILLUSTRATION REFERENCE	APPLICABILITY AIRPLANE	APPLICABILITY ENGINE
RESTORE	VOICE RECORDER ULB		NOTE	ALL

ZONES	ACCESS PANELS
253	NOTE

MECH	INSP	MPD ITEM NUMBER
		23-71-03-2B

REPLACE THE VOICE RECORDER UNDERWATER LOCATOR BEACON (ULB) AND OPERATIONALLY CHECK ULB AT THE MANUFACTURER'S ULB LIFE LIMIT.

INTERVAL NOTE: ULB LIFE LIMIT IS CURRENTLY SIX YEARS FROM DATE OF ULB MANUFACTURE.

ACCESS NOTE: ACCESS THROUGH OPEN LOWERED CEILING PANEL AT STA 1550.

AIRPLANE NOTE: AIRPLANES EQUIPPED WITH UNDERWATER LOCATOR BEACONS THAT HAVE A 6-YEAR LIFE-LIMIT BATTERY.

1. Underwater Locater Beacon Removal (Fig. 201)

   A. References

      (1) AMM 23-71-01/401, Voice Recorder

      (2) AMM 25-22-02/401, Lowered Ceiling Panels

   B. Removal Procedure

      (1) Open the ceiling panel (AMM 25-22-02/401) to get access to the voice recorder in the aft passenger compartment ceiling.

      (2) Do this task: Remove the Voice Recorder (AMM 23-71-01/401).

      (3) Remove the underwater locator beacon from the voice recorder.

         (a) Loosen the four nuts that hold the ULB.

         (b) Remove the two nuts and the clamp from one end of the ULB.

         (c) Remove the ULB.

BOEING PROPRIETARY - Copyright (C) - Unpublished Work - See title page for details.

(d) Keep the two nuts and the clamp.

2. VOICE RECORDERS WITH DUKANE ULBs;
Underwater Locator Beacon Battery Replacement (Fig. 202)

A. General

(1) This procedure contains these tasks:

(2) A removal of the Dukane ULB Battery.

(3) An installation of the Dukane ULB Battery.

B. Equipment

(1) Spanner Wrench, 810-325
Dukane Corporation,
2900 Dukane Drive,
St. Charles, IL 60174

(2) Split Radiator Hose
1-1/4-inch diameter, 5 inches in length

C. Consumable Materials

(1) G02440 Battery, Dukane 810-2007/K

D. Removal Procedure

WARNING: DO NOT REMOVE THE BATTERY FROM THE DK100/DK130 ULB. DO NOT CAUSE DAMAGE TO THE DK100/DK130 ULB. DO NOT DISCARD THE DK100 /DK130 ULB. THE MANUFACTURER HAS A REPLACEMENT PROGRAM FOR EXPIRED ULBs. ON OR BEFORE THE EXPIRED DATE, SEND THE DK100 /DK130 ULB TO THE MANUFACTURER FOR SERVICING. THE BATTERY CONTAINS DANGEROUS CHEMICAL MATERIALS WHICH CAN CAUSE INJURIES TO PERSONNEL.

(1) If you have a DK100/DK130 ULB, send it to the manufacturer for servicing.

(2) If you do not have a DK100/DK130 ULB, remove the ULB battery:

BOEING PROPRIETARY - Copyright (C) - Unpublished Work - See title page for details.

CAUTION: DO NOT HOLD THE UNDERWATER LOCATOR BEACON WITH A VISE. THIS CAN CAUSE DAMAGE TO THE UNDERWATER LOCATOR BEACON.

(a) Hold the ULB body with a split radiator hose.

(b) Use a spanner wrench to remove the end cap that is identified BATTERY ACCESS.

(c) Remove the rubber shock cushion from the battery end if it is not removed with the cap.

(d) Hit the ULB body lightly to remove the battery.

E. Installation Procedure

(1) Install the ULB battery:

(a) Put a new battery replacement label on the ULB body.

(b) On the date label, write the next scheduled replacement date for the new ULB battery that you installed.

NOTE: The date label is blank so you can write in a replacement date based on your maintenance schedule.

CAUTION: INSTALL THE ULB BATTERY CORRECTLY. INCORRECT POLARITY WILL CAUSE PERMANENT DAMAGE TO THE ULB.

(c) Put the new battery in the ULB with the end identified by INSERT THIS END in first.

(d) Remove and discard the used O-ring from the end cap.

CAUTION: DIRT OR OTHER UNWANTED MATERIAL CAN CAUSE DAMAGE TO THE THREADS AND THE O-RING SEAL. THIS CAN PERMIT WATER LEAKAGE.

(e) Clean the threads and the O-ring groove in ULB body.

BOEING PROPRIETARY - Copyright (C) - Unpublished Work - See title page for details.

(f) Apply a thin layer of lubricant to the O-ring, O-ring groove, and threads.

(g) Install a new O-ring on the end cap.

(h) Put the rubber shock cushion smoothly on the end cap.

(i) Put the end cap into the body.

(j) Tighten the end cap until the cap flange touches the ULB body.

NOTE: Only use hand force on the spanner wrench.

(2) Do this task: Underwater Locator Beacon - Operational Test.

3. VOICE RECORDERS WITH TELEDYNE BENTHOS ULBs; Underwater Locator Beacon Battery Replacement (Fig. 202)

A. General

(1) This procedure contains these tasks:

(a) Prepare for the removal of the Teledyne Benthos ULB Battery.

(b) A removal of the Teledyne Benthos ULB Battery.

(c) An installation of the Teledyne Benthos ULB Battery.

B. Equipment

(1) B362-09111, Torque Adapter, Used on Underwater Locator Beacon
Teledyne Benthos, Inc.
49 Edgerton Drive
North Falmouth, MA 02556

(2) Split Radiator Hose
1-1/4-inch diameter, 5 inches in length

C. Consumable Materials

BOEING PROPRIETARY - Copyright (C) - Unpublished Work - See title page for details.

(1) B362-06192-2, Teledyne Benthos.

NOTE: B362-06192-2 contains a lithium battery P/N C362-04270-2, a 2-022 O-Ring, an O-Ring lubricant packet and replacement instruction.

D. Prepare for the Removal

(1) Measure the battery voltage of the ELP-362D ULB. Use a high-impedance digital voltmeter with a minimum input impedance of 10 Megohms.

(a) Put the negative meter lead on the water switch.

(b) Put the positive meter lead on the bare aluminum surface of the beacon housing.

(c) Read the voltmeter.

E. Removal Procedure

(1) If the measured voltage is less than 6.0 Volts, send the ELP-362D ULB to the manufacturer for servicing.

(2) If the measured voltage is 6.0 Volts or more, remove the battery from the ELP-362D ULB:

CAUTION: DO NOT HOLD THE UNDERWATER LOCATOR BEACON WITH A VISE. THIS CAN CAUSE DAMAGE TO THE UNDERWATER LOCATOR BEACON.

(a) Hold the ULB body with a split radiator hose.

(b) Use the torque adapter to remove the end cap that is identified as BATTERY ACCESS.

(c) Turn the housing up to remove the battery from the unit.

(d) Discard the battery.

NOTE: Refer to local instructions when you discard the battery.

BOEING PROPRIETARY - Copyright (C) - Unpublished Work - See title page for details.

MECH	INSP

F. Installation Procedure

(1) Install the new ULB battery:

NOTE: The Teledyne Benthos C362-04270-2 battery is a six year battery.

(a) Set the battery until the arrow points to the top end of the unit.

NOTE: The battery label has an arrow mark.

(b) On the date label, write the next scheduled replacement date for the new ULB battery that you installed.

NOTE: The date label is blank so you can write in a replacement date based on your maintenance schedule.

CAUTION: INSTALL THE ULB BATTERY CORRECTLY. INCORRECT POLARITY WILL CAUSE PERMANENT DAMAGE TO THE ULB.

(c) Put the new battery in the ULB with the end identified by INSERT THIS END in first.

(d) Remove the O-ring from its groove in the end cap.

CAUTION: DIRT OR OTHER UNWANTED MATERIAL CAN CAUSE DAMAGE TO THE THREADS AND THE O-RING SEAL. THIS CAN PERMIT WATER LEAKAGE.

(e) Clean O-ring groove of dirt, lint, and other unwanted materials.

(f) Apply the O-ring lubricant to the new O-ring.

(g) Put the lubricated O-ring in the end-cap groove.

(h) Attach the end cap to the housing.

BOEING PROPRIETARY - Copyright (C) - Unpublished Work - See title page for details.

(i) Use the torque adapter to install the end cap tightly.

NOTE: Only use hand force on the torque adapter.

(j) Torque the end cap to 25 to 30 inch pounds.

(2) Do this task: Underwater Locator Beacon - Operational Test.

4. Underwater Locator Beacon - Operational Test

A. Equipment

(1) Ultrasonic Test Set, 42A12 Series (alternative)
Dukane Corporation
2900 Dukane Drive
St. Charles, IL 60174

(2) Ultrasonic Test Set, PL1 (alternative)
Dukane Corporation
2900 Dukane Drive
St. Charles, IL 60174

(3) Ultrasonic Test Set, PL3 (alternative)
Dukane Corporation
2900 Dukane Drive
St. Charles, IL 60174

(4) Acoustic Test Set, ATS-260 (alternative)
Datasonics INC.
1400 Route 28A
Cataumet, MA 02534

B. Procedure

(1) If you have a 42A12 Series test set, do this test of the ULB:

NOTE: 42A12 can do a test for all Dukane and Teledyne Benthos ULBs.

(a) Put the test set approximately 3 feet from ULB.

(b) Set the OFF-GAIN control switch on test set to middle position.

1) Make sure that you hear sounds through the earphone on the test set.

BOEING PROPRIETARY - Copyright (C) - Unpublished Work - See title page for details.

MECH	INSP

(c) Set the TUNING CONTROL to 37 ±1 kHz.

(d) Set the INPUT SELECTOR switch to the INT position.

(e) Make sure the test set operates correctly.

1) Rub your thumb and fingers together in front of the microphone to make sure it operates.

NOTE: This will produce a rushing noise from the speaker.

a) Make sure you hear sounds through the test set earphone.

(f) Use tape to attach a piece of wire or other conductive material to the ULB case and the center of the water switch.

NOTE: This will make a short circuit from the center of the water switch to the outer part of the ULB.

1) Make sure you hear a pulsed tone at 1-second intervals.

(g) Remove the piece of wire or other conductive material from the ULB case and center of the water switch.

1) Make sure you do not hear a pulsed tone.

(h) Set the OFF-GAIN control switch to the OFF position.

(i) Make sure that the water switch on the ULB has no grease or dirt.

1) If necessary, clean the switch with water and detergent.

2) Dry the switch with a clean cloth.

(2) If you have a PL1 test set, do this test of the ULB:

NOTE: PL1 can only do a test for the DK100 ULB.

BOEING PROPRIETARY - Copyright (C) - Unpublished Work - See title page for details.

MECH	INSP

(a) Use tape to attach a piece of wire or other conductive material to the ULB case and the center of the water switch.

NOTE: This will make a short circuit from the center of the water switch to the outer part of the ULB.

(b) Put the end of the test set against the ULB, approximately one inch from the water switch.

(c) Push and hold operation switch on the test set.

1) Make sure the BEACON ACTIVE WHEN FLASHING light flashes.

2) Remove the piece of wire or other conductive material from the ULB case and center of the water switch.

3) Make sure the BEACON ACTIVE WHEN FLASHING light does not flash.

(d) Release the operation switch on the test set.

(e) Remove the test set.

(f) Make sure that the water switch on the ULB has no grease or dirt.

1) If necessary, clean the switch with water and detergent.

2) Dry the switch with a clean cloth.

(3) If you have a PL3 test set, do this test:

NOTE: PL3 can only do a test for the DK100 and DK120 ULBs.

(a) Push and hold the test set against the ULB water switch.

1) Make sure that you hear a pulse sound.

2) Make sure that you see the LED light comes on and off.

(b) Remove the test set from the ULB.

(c) Make sure that the water switch on the ULB has no grease or dirt.

BOEING PROPRIETARY - Copyright (C) - Unpublished Work - See title page for details.

MECH | INSP

1) If necessary, clean the switch with water and detergent.

2) Dry the switch with a clean cloth.

(4) If you have an ATS-260 test set, do this test of ULB:

NOTE: ATS-260 can only do a test for the ELP-362D ULB.

(a) Put the test set clip on the ULB.

(b) Push and hold the PUSH TO TEST button.

(c) Put the test set probe on the ULB water switch.

1) Make sure a green LED shows.

2) Make sure you can hear sounds from the test set.

3) Make sure the amber LED flashes.

(d) Release the PUSH TO TEST button.

(e) Remove the test set.

(f) Make sure that the water switch on the ULB has no grease or dirt.

1) If necessary, clean the switch with water and detergent.

2) Dry the switch with a clean cloth.

(5) If you have a TS200 test set, do this test of the ULB:

NOTE: TS200 can do a test for all Dukane ULBs.

(a) Attach the test probe clip of the test set to the beacon in its mount.

(b) Put the tip of the probe on the silver pad of the water switch at the end of the beacon.

1) The LCD display will show the battery voltage of the beacon.

BOEING PROPRIETARY - Copyright (C) - Unpublished Work - See title page for details.

(c) Refer to the applicable battery code for the minimum permitted range of the beacon battery voltage:

NOTE: Examine the battery replacement label to find the battery code.

1) Code A - 3.55 Volts

2) Code B - 2.97 Volts

3) Code C - 2.97 Volts

4) Code D - 2.97 Volts

(d) Push the red button on the test set.

1) The beacon starts and you hear a pinging noise from the test set.

(e) Remove the test probe clip of the test set from the ULB.

(f) Replace the ULB if necessary.

5. Underwater Locator Beacon Installation (Fig. 201)

A. Consumable Materials

(1) B00541 Detergent, General Purpose

B. References

(1) AMM 23-71-01/401, Voice Recorder

(2) AMM 25-22-02/401, Lowered Ceiling Panels

C. Installation Procedure

(1) Install the underwater locator beacon on the voice recorder:

(a) Make sure that the water switch on the ULB has no grease or dirt.

1) Clean the water switch with a weak detergent.

(b) Install the clamp on the end of the ULB with the two nuts.

BOEING PROPRIETARY - Copyright (C) - Unpublished Work - See title page for details.

MECH	INSP

(c) Make sure you can read the replacement date on the ULB.

(d) Tighten the four nuts.

(2) Do this task: Install the Voice Recorder (AMM 23-71-01/401).

BOEING PROPRIETARY - Copyright (C) - Unpublished Work - See title page for details.

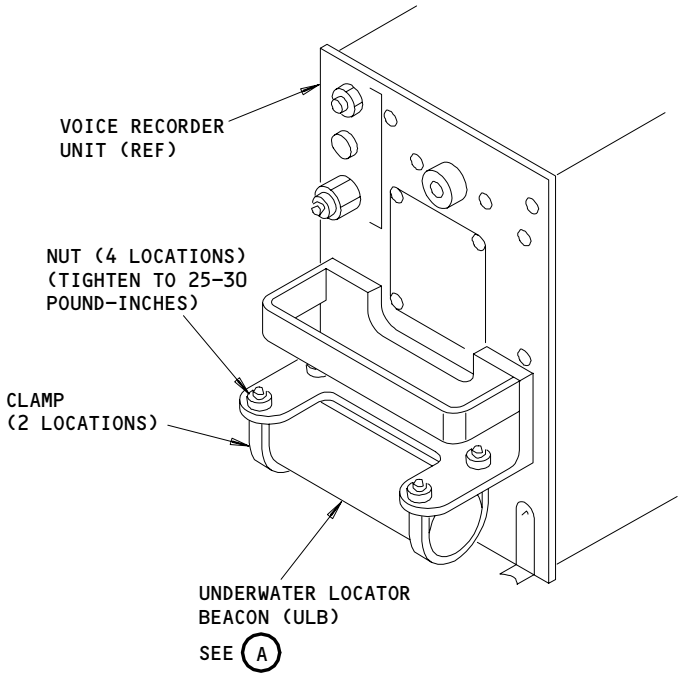

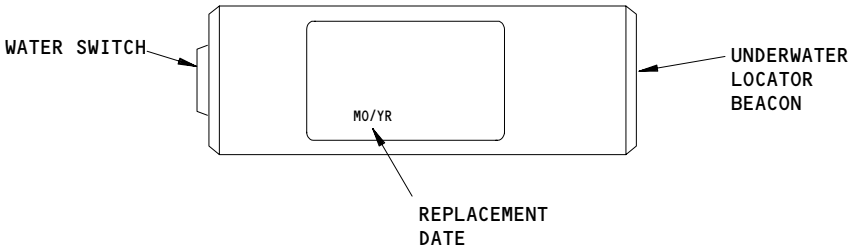

UNDERWATER LOCATOR BEACON

A

Underwater Locator Beacon Installation
Figure 201

BOEING PROPRIETARY - Copyright (C) - Unpublished Work - See title page for details.

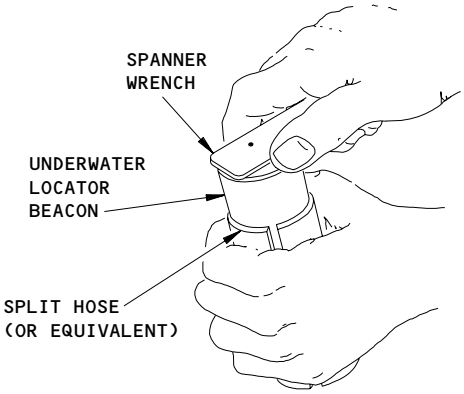

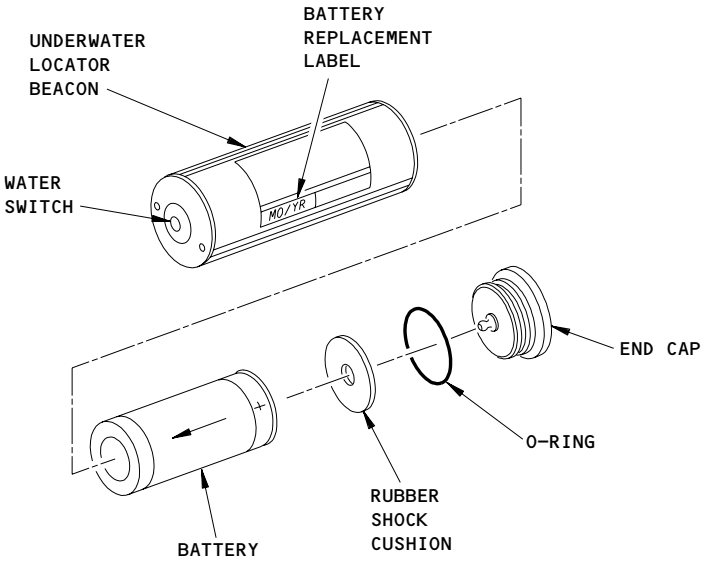

BATTERY INSTALLATION

Underwater Locator Beacon Battery Replacement
Figure 202

BOEING PROPRIETARY - Copyright (C) - Unpublished Work - See title page for details.

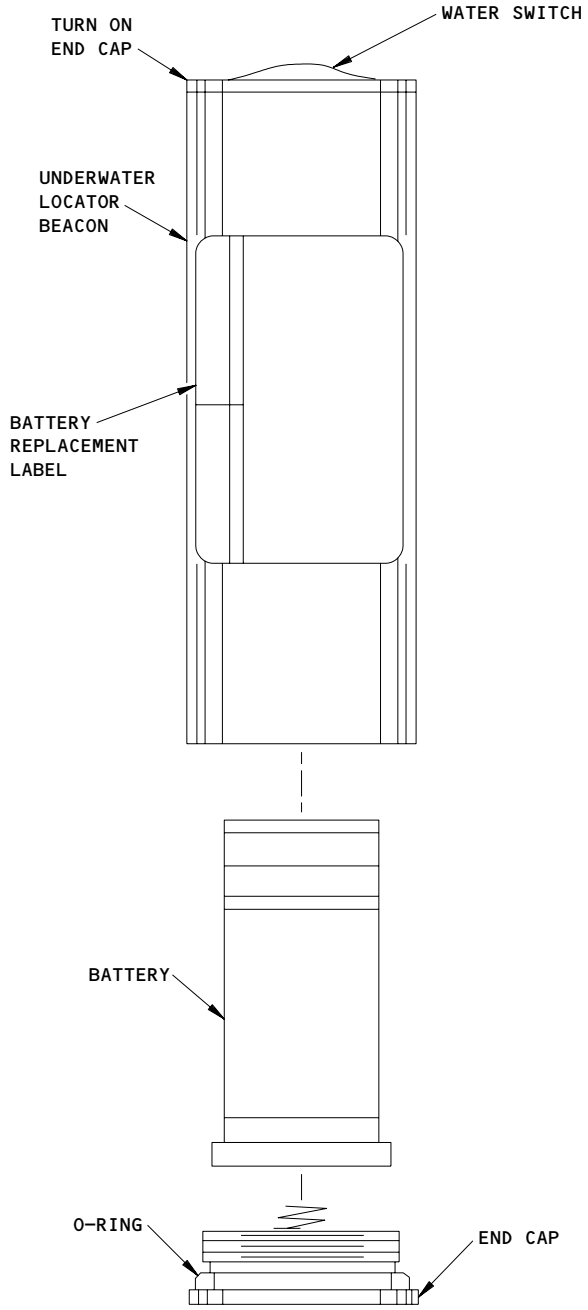

BATTERY INSTALLATION

Underwater Locator Beacon Battery Replacement
Figure 203

BOEING PROPRIETARY - Copyright (C) - Unpublished Work - See title page for details.

SKILL	WORK AREA	RELATED TASK	INTERVAL	PHASE	MPD REV	TASK CARD REVISION
AVION	PASS CABIN		00002 YRS	11616	014	APR 22/09

TASK	TITLE	STRUCTURAL ILLUSTRATION REFERENCE	APPLICABILITY AIRPLANE	APPLICABILITY ENGINE
OPERATIONAL	VOICE DATA RECORDER ULB		NOTE	ALL

ZONES	ACCESS PANELS
253	NOTE

MECH | INSP | MPD ITEM NUMBER

OPERATIONALLY CHECK THE VOICE DATA RECORDER UNDERWATER LOCATOR BEACON. 23-71-03-2C

ACCESS NOTE: ACCESS THROUGH OPEN LOWERED CEILING PANEL AT STA 1640.

AIRPLANE NOTE: AIRPLANES EQUIPPED WITH UNDERWATER LOCATOR BEACONS THAT HAVE A 6-YEAR LIFE-LIMIT BATTERY.

1. Underwater Locator Beacon - Operational Test

A. References

(1) AMM 25-22-02/401, Lowered Ceiling Panels

B. Equipment

(1) Ultrasonic Test Set, 42A12 Series (alternative)
Dukane Corporation
2900 Dukane Drive
St. Charles, IL 60174

(2) Ultrasonic Test Set, PL1 (alternative)
Dukane Corporation
2900 Dukane Drive
St. Charles, IL 60174

(3) Ultrasonic Test Set, PL3 (alternative)
Dukane Corporation
2900 Dukane Drive
St. Charles, IL 60174

BOEING PROPRIETARY - Copyright (C) - Unpublished Work - See title page for details.

(4) Acoustic Test Set, ATS-260 (alternative)
Datasonics INC.
1400 Route 28A
Cataumet, MA 02534

C. Procedure

(1) Open the ceiling panel (AMM 25-22-02/401) to get access to the voice recorder in the aft passenger compartment ceiling.

(2) If you have a 42A12 Series test set, do this test of the ULB:

NOTE: 42A12 can do a test for all Dukane and Teledyne Benthos ULBs.

(a) Put the test set approximately 3 feet from ULB.

(b) Set the OFF-GAIN control switch on test set to middle position.

1) Make sure that you hear sounds through the earphone on the test set.

(c) Set the TUNING CONTROL to 37 ±1 kHz.

(d) Set the INPUT SELECTOR switch to the INT position.

(e) Make sure the test set operates correctly.

1) Rub your thumb and fingers together in front of the microphone to make sure it operates.

NOTE: This will produce a rushing noise from the speaker.

a) Make sure you hear sounds through the test set earphone.

(f) Use tape to attach a piece of wire or other conductive material to the ULB case and the center of the water switch.

NOTE: This will make a short circuit from the center of the water switch to the outer part of the ULB.

1) Make sure you hear a pulsed tone at 1-second intervals.

BOEING PROPRIETARY - Copyright (C) - Unpublished Work - See title page for details.

MECH	INSP

(g) Remove the piece of wire or other conductive material from the ULB case and center of the water switch.

1) Make sure you do not hear a pulsed tone.

(h) Set the OFF-GAIN control switch to the OFF position.

(i) Make sure that the water switch on the ULB has no grease or dirt.

1) If necessary, clean the switch with water and detergent.

2) Dry the switch with a clean cloth.

(3) If you have a PL1 test set, do this test of the ULB:

NOTE: PL1 can only do a test for the DK100 ULB.

(a) Use tape to attach a piece of wire or other conductive material to the ULB case and the center of the water switch.

NOTE: This will make a short circuit from the center of the water switch to the outer part of the ULB.

(b) Put the end of the test set against the ULB, approximately one inch from the water switch.

(c) Push and hold operation switch on the test set.

1) Make sure the BEACON ACTIVE WHEN FLASHING light flashes.

2) Remove the piece of wire or other conductive material from the ULB case and center of the water switch.

3) Make sure the BEACON ACTIVE WHEN FLASHING light does not flash.

(d) Release the operation switch on the test set.

(e) Remove the test set.

(f) Make sure that the water switch on the ULB has no grease or dirt.

1) If necessary, clean the switch with water and detergent.

BOEING PROPRIETARY - Copyright (C) - Unpublished Work - See title page for details.

MECH | INSP

2) Dry the switch with a clean cloth.

(4) If you have a PL3 test set, do this test:

NOTE: PL3 can only do a test for the DK100 and DK120 ULBs.

(a) Push and hold the test set against the ULB water switch.

1) Make sure that you hear a pulse sound.

2) Make sure that you see the LED light comes on and off.

(b) Remove the test set from the ULB.

(c) Make sure that the water switch on the ULB has no grease or dirt.

1) If necessary, clean the switch with water and detergent.

2) Dry the switch with a clean cloth.

(5) If you have an ATS-260 test set, do this test of ULB:

NOTE: ATS-260 can only do a test for the ELP-362D ULB.

(a) Put the test set clip on the ULB.

(b) Push and hold the PUSH TO TEST button.

(c) Put the test set probe on the ULB water switch.

1) Make sure a green LED shows.

2) Make sure you can hear sounds from the test set.

3) Make sure the amber LED flashes.

(d) Release the PUSH TO TEST button.

(e) Remove the test set.

(f) Make sure that the water switch on the ULB has no grease or dirt.

1) If necessary, clean the switch with water and detergent.

BOEING PROPRIETARY - Copyright (C) - Unpublished Work - See title page for details.

MECH	INSP

2) Dry the switch with a clean cloth.

(6) If you have a TS200 test set, do this test of the ULB:

NOTE: TS200 can do a test for all Dukane ULBs.

(a) Attach the test probe clip of the test set to the beacon in its mount.

(b) Put the tip of the probe on the silver pad of the water switch at the end of the beacon.

1) The LCD display will show the battery voltage of the beacon.

(c) Refer to the applicable battery code for the minimum permitted range of the beacon battery voltage:

NOTE: Examine the battery replacement label to find the battery code.

1) Code A - 3.55 Volts

2) Code B - 2.97 Volts

3) Code C - 2.97 Volts

4) Code D - 2.97 Volts

(d) Push the red button on the test set.

1) The beacon starts and you hear a pinging noise from the test set.

(e) Remove the test probe clip of the test set from the ULB.

(f) Replace the ULB if necessary.

(7) Close the ceiling panel (AMM 25-22-02/401) in the aft passenger compartment.

BOEING PROPRIETARY - Copyright (C) - Unpublished Work - See title page for details.

STATION		BOEING CARD NO.
TAIL NO.	SAS BOEING 767 TASK CARD	23-006-02
DATE		AIRLINE CARD NO.

SKILL	WORK AREA	RELATED TASK	INTERVAL	PHASE	MPD REV	TASK CARD REVISION
AVION	CREW CABIN		NOTE			DEC 22/03

TASK	TITLE	STRUCTURAL ILLUSTRATION REFERENCE	APPLICABILITY AIRPLANE	APPLICABILITY ENGINE
OPERATIONAL	EMERGENCY LOCATOR TRANSMITTER		NOTE	ALL

ZONES	ACCESS PANELS
211 212	

MECH	INSP	MPD ITEM NUMBER

OPERATIONALLY CHECK THE EMERGENCY LOCATOR TRANSMITTER (AUTOMATIC/FIXED TYPE). 23-24-00-5A

INTERVAL NOTE: MANUFACTURER'S RECOMMENDATION OR NATIONAL REQUIREMENT.

AIRPLANE NOTE: IF INSTALLED.

THIS TYPE OF ELT IS ACTIVATED BY A G-FORCE SWITCH AND IS POWERED BY NON-RECHARGEABLE LITHIUM BATTERIES.

1. Emergency Locator Transmitter - Operational Test

A. References

(1) AMM 23-12-00/501, VHF Communication System

(2) AMM 23-51-00/501, Flight Interphone System

(3) AMM 24-22-00/201, Electrical Power - Control

(4) AMM 31-41-00/501, Engine Indication and Crew Alerting System (EICAS)

B. Access

(1) Location Zones
211/212 Flight Compartment

C. Procedure

(1) Supply electrical power (AMM 24-22-00/201).

(2) Make sure these systems operate:

(a) The VHF communication system (AMM 23-12-00/501).

BOEING PROPRIETARY - Copyright (C) - Unpublished Work - See title page for details.

MECH	INSP

(b) The flight interphone system (AMM 23-51-00/501).

(c) The engine indication and crew alerting system (EICAS) (AMM 31-41-00/501).

(3) Set the VHF-R communication system to listen for the 121.5 MHz test frequency (AMM 23-12-00/501).

NOTE: Any VHF system with a bottom mounted antenna can be used for this test. If the VHF antenna is on the top, it is possible to hear the ELT signal even though the ELT antenna has failed.

CAUTION: MAKE SURE YOU FOLLOW THE LOCAL ELT OPERATION REGULATIONS. TELL THE AUTHORITIES IF AN ACCIDENTAL TRANSMISSION IS MADE. THIS WILL PREVENT EMERGENCY SEARCH OPERATIONS THAT ARE NOT NECESSARY.

(4) Open the guard on the ELT switch on the pilots' overhead panel, P5.

(5) Push and hold the ELT switch in the TEST position.

(a) Make sure the ELT signal can be heard on the VHF system.

(6) Release the ELT switch.

(a) Make sure the switch returns to the AUTO position.

(b) Make sure the ELT signal can not be heard on the VHF system.

(7) Close the guard over the ELT switch.

(8) Remove electrical power if it is not necessary (AMM 24-22-00/201).

BOEING PROPRIETARY - Copyright (C) - Unpublished Work - See title page for details.

STATION		BOEING CARD NO.
TAIL NO.	SAS BOEING 767 TASK CARD	23-007-01
DATE		AIRLINE CARD NO.

SKILL	WORK AREA	RELATED TASK	INTERVAL	PHASE	MPD REV	TASK CARD REVISION
AVION	UPR FUSLAGE		NOTE			APR 22/09

TASK	TITLE	STRUCTURAL ILLUSTRATION REFERENCE	APPLICABILITY AIRPLANE	APPLICABILITY ENGINE
REPLACE	EMERGENCY LOCATOR TRANSMITTER		NOTE	ALL

ZONES	ACCESS PANELS
253 254	

MECH	INSP	MPD ITEM NUMBER

DISCARD THE EMERGENCY LOCATOR TRANSMITTER (AUTOMATIC/FIXED TYPE) BATTERY. 23-24-01-2A

INTERVAL NOTE: MANUFACTURER'S RECOMMENDATION

AIRPLANE NOTE: IF INSTALLED.

THIS TYPE OF ELT IS ACTIVATED BY A G-FORCE SWITCH AND IS POWERED BY NON-RECHARGEABLE LITHIUM BATTERIES.

1. Replace ELT Battery (Fig. 201)

   A. Access

      (1) Location Zone
          253/254 Area above passenger cabin ceiling - section 46

   B. Procedure

      (1) Remove the ELT from the mounting bracket (refer to the Remove Emergency Locator Transmitter paragraph).

      (2) Remove the four screws that hold the control head assembly to the battery pack (Fig. 201).

      (3) Remove the control head assembly from the battery pack to get access to the battery connector.

      (4) Remove the battery connector from the control head assembly.

      (5) Remove the protective tape for the new battery pack connector.

      (6) Install the connector on the back of the control head assembly.

      (7) Look at the manufacturers instructions on the container of the sealant supplied with the new battery pack.

BOEING PROPRIETARY - Copyright (C) - Unpublished Work - See title page for details.

MECH	INSP

(8) Apply a thin continuous bead of sealant to the control head assembly.

(a) Do it in an area where the assembly touches the battery pack.

(9) Make sure the screw holes are in position and install the control head on the battery pack.

(10) Apply a small quantity of the sealant to the countersink of each screw hole.

(11) Install four screws and hand tighten. Do not overtighten the screws.

(12) Make the surfaces clean.

(13) Install the ELT in the mounting bracket do a test of the installation (refer to the Install Emergency Locator Transmitter paragraph).

BOEING PROPRIETARY - Copyright (C) - Unpublished Work - See title page for details.

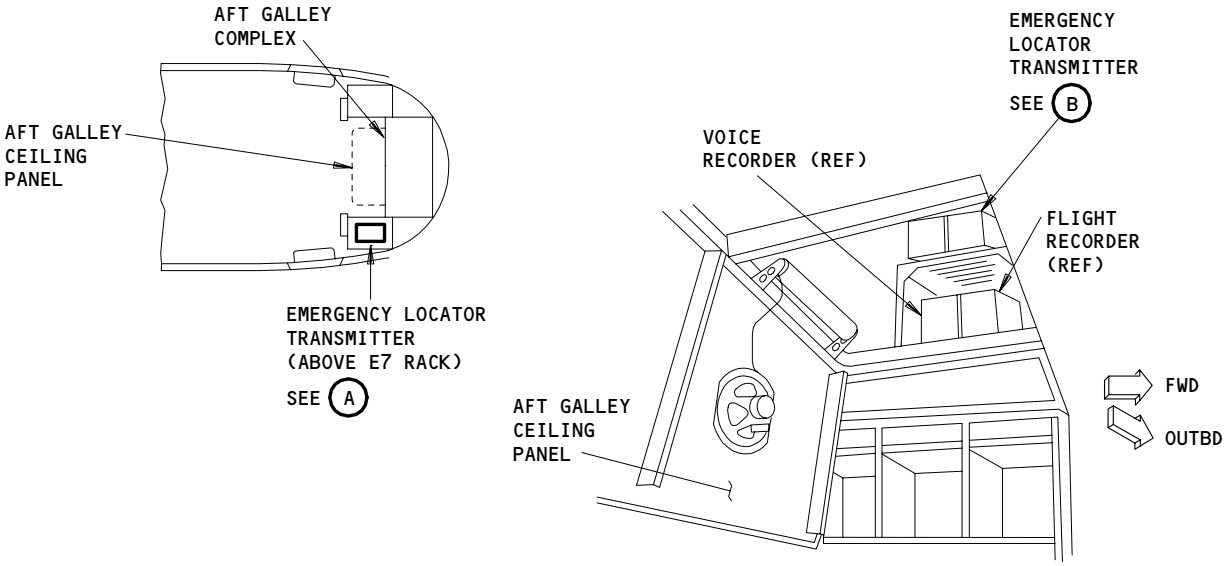

EMERGENCY LOCATOR TRANSMITTER

A

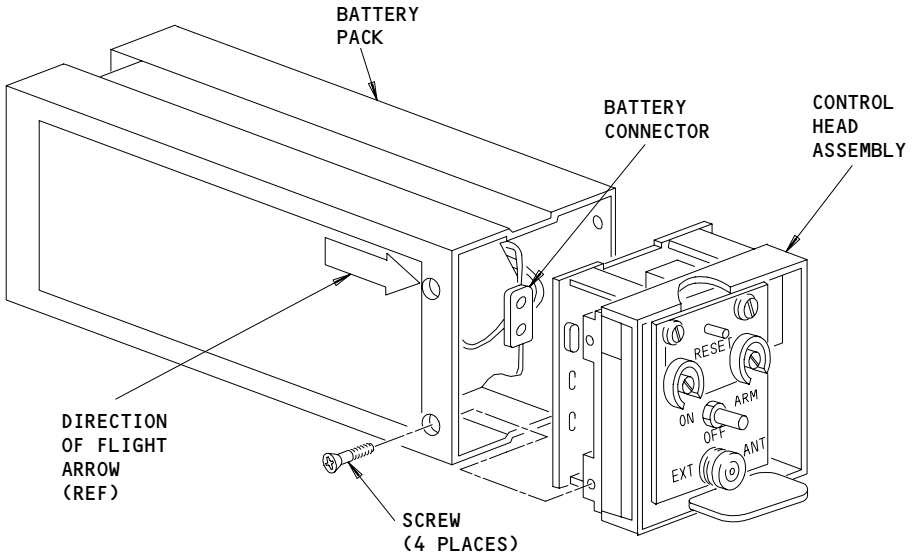

EMERGENCY LOCATION TRANSMITTER

B

Emergency Locator Transmitter
Figure 201

BOEING PROPRIETARY - Copyright (C) - Unpublished Work - See title page for details.