STATION		BOEING CARD NO.
TAIL NO.	SAS BOEING 767 TASK CARD	30-001-01-1
DATE		AIRLINE CARD NO.

SKILL	WORK AREA	RELATED TASK	INTERVAL	PHASE	MPD REV	TASK CARD REVISION
AIRPL	L WING LE	W-30-002-01-1	4C	14848	012	AUG 22/06

TASK	TITLE	STRUCTURAL ILLUSTRATION REFERENCE	APPLICABILITY AIRPLANE	APPLICABILITY ENGINE
FUNCTIONAL	LEFT WING TAI TEMPERATURE SWITCH		NOTE	ALL

ZONES	ACCESS PANELS
211 521	521ANB

MECH	INSP	MPD ITEM NUMBER
		30-11-03-4A

FUNCTIONALLY CHECK THE SETTING OF THE LEFT WING TAI TEMPERATURE SWITCHES AND CIRCUIT VERIFICATION (REMOVAL FROM DUCT REQUIRED).

AIRPLANE NOTE: THIS TASK IS APPLICABLE TO ALL AIRPLANE MODELS WITHOUT PRIMARY ICE DETECTION AND IS NOT APPLICABLE TO THE 767-400ER.

THE FOLLOWING PROCEDURE APPLIES TO THE ON-AIRCRAFT PORTION OF THIS TASK (REMOVAL/INSTALLATION AND CIRCUIT VERIFICATION):

1. <u>Remove the Wing TAI Overheat Switch</u> (Fig. 401)

   A. References

      (1) AMM 06-44-00/201, Wings (Major Zones 500 and 600) Access Doors and Panels

   B. Access

      (1) Location Zones
          521 Leading Edge to Front Spar (Left)
          621 Leading Edge to Front Spar (Right)

      (2) Access Panels
          521 ANB Fixed Wing Lower Panel (Left)
          621 ANB Fixed Wing Lower Panel (Right)

   C. Procedure

      (1) Open this circuit breaker on the overhead circuit breaker panel, P11, and attach DO-NOT-CLOSE tag:

          (a) 11A31, ANTI-ICE WING

BOEING PROPRIETARY - Copyright (C) - Unpublished Work - See title page for details.

MECH | INSP

(2) When you remove the left wing TAI overheat switch (S398), remove the fixed wing lower panel 521 ANB (AMM 06-44-00/201).

(3) When you remove the right wing TAI overheat switch (S399), remove the fixed wing lower panel 621 ANB (AMM 06-44-00/201).

WARNING: LET THE WING TAI DUCT COOL BEFORE YOU TOUCH THE DUCT. THE WING THERMAL ANTI-ICE DUCT CAN BE HOT AND CAUSE INJURY TO PERSONS.

(4) Remove the electrical connector from the wing TAI overheat switch.

(5) Remove the wing TAI overheat switch. Discard the O-ring.

2. Install the Wing TAI Overheat Switch (Fig. 401)

A. Consumable Materials

(1) D00006 Anti-seize Compound, High Temperature - Ease-Off 990

B. References

(1) AMM 06-44-00/201, Wings (Major Zones 500 and 600) Access Doors and Panels

C. Access

(1) Location Zones
521 Leading Edge to Front Spar (Left)
621 Leading Edge to Front Spar (Right)

(2) Access Panels
521 ANB Fixed Wing Lower Panel (Left)
621 ANB Fixed Wing Lower Panel (Right)

D. Procedure

(1) Apply the anti-seize compound to the threads.

(2) Install a new O-ring on the wing TAI overheat switch.

(3) Install the wing TAI overheat switch.

BOEING PROPRIETARY - Copyright (C) - Unpublished Work - See title page for details.

MECH	INSP

(4) Connect the electrical connector to the wing TAI overheat switch and install the lockwire.

(5) Install the fixed wing lower panel (AMM 06-44-00/201).

(6) Remove the DO-NOT-CLOSE tag and close this circuit breaker on the overhead circuit breaker panel, P11:

(a) 11A31, ANTI-ICE WING

3. Do a Test of the Wing TAI Overheat Switch

A. References

(1) AMM 24-22-00/201, Electrical Power - Control

(2) AMM 49-11-00/201, Auxiliary Power Unit

B. Access

(1) Location Zone
211/212 Control Cabin - Section 41

C. Procedure

(1) Supply electrical power (AMM 24-22-00/201).

(2) Start the APU (AMM 49-11-00/201).

NOTE: The APU is not necessary if you do the wing TAI overheat switch test during engine runup.

(3) Push the L or R ISLN switch/light (air supply control module) (as applicable) on the pilot's overhead panel, P5, to the ON position.

(a) Make sure the white bar light is on.

(4) Push the APU VALVE switch/light (air supply control module) on the P5 panel to the ON position.

(a) Make sure the white bar light is on.

(5) Hold the WING ANTI-ICE WINDOW/PROBE HEAT test switch (on the P61 panel) in the WING ANTI-ICE position.

BOEING PROPRIETARY - Copyright (C) - Unpublished Work - See title page for details.

MECH	INSP

(a) Make sure the applicable light (L or R VALVE) on the P5 panel is on for approximately 2 seconds, goes off for approximately 10-20 seconds, and then stays on.

(6) Release the WING ANTI-ICE WINDOW/PROBE HEAT test switch.

(a) Make sure the applicable light (L or R VALVE) goes off.

(7) Push the APU VALVE switch/light on the P5 panel to the OFF position.

(a) Make sure the white bar light is off.

(8) Push the L or R ISLN switch/light on the P5 panel to the OFF position.

(a) Make sure the white bar light is off.

(9) Stop the APU if it is not necessary (AMM 49-11-00/201).

(10) Remove electrical power if it is not necessary (AMM 24-22-00/201).

BOEING PROPRIETARY - Copyright (C) - Unpublished Work - See title page for details.

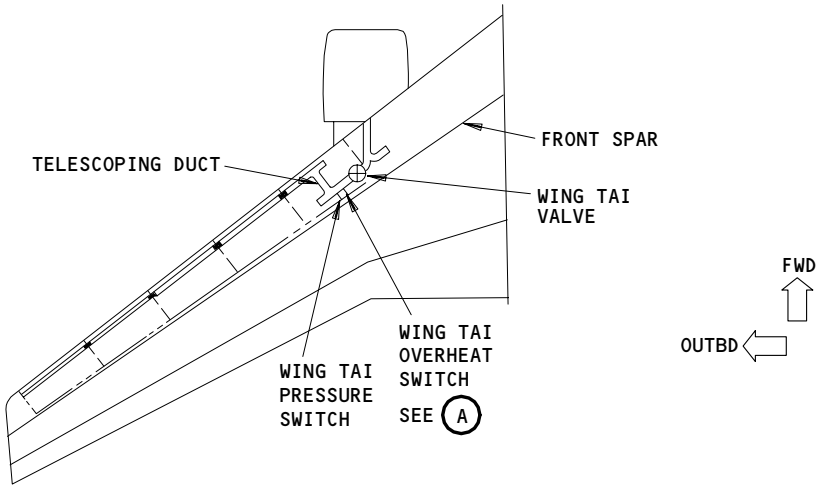

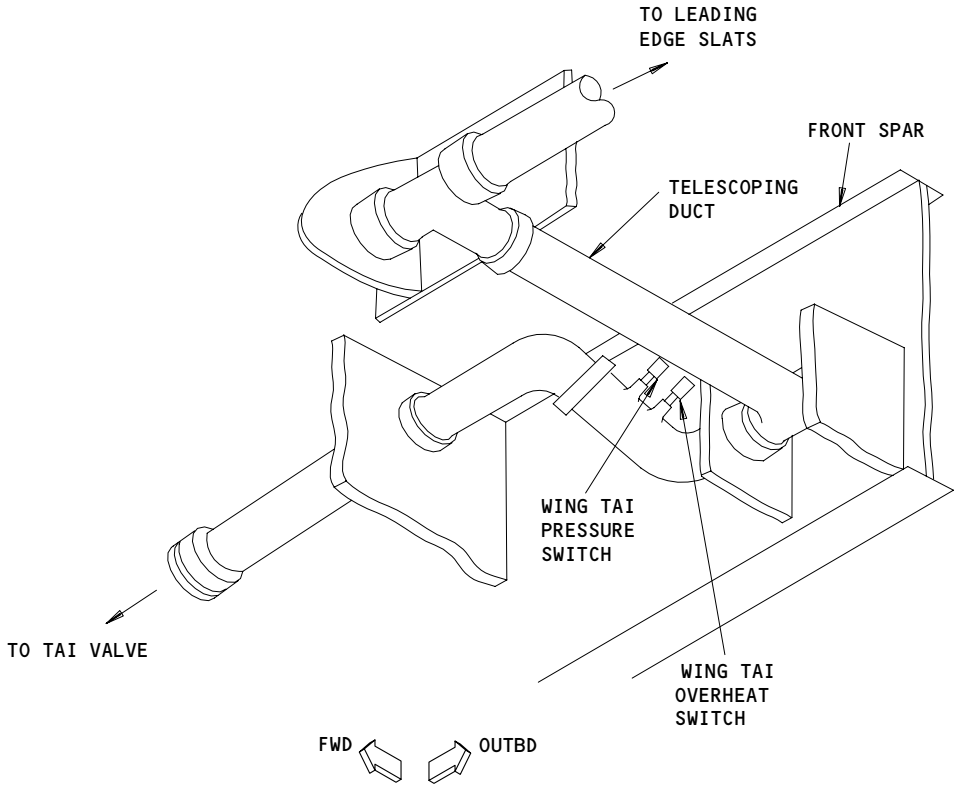

WING TAI OVERHEAT SWITCH

A

Wing Thermal Anti-Ice (TAI) Overheat Switch Installation
Figure 401

BOEING PROPRIETARY - Copyright (C) - Unpublished Work - See title page for details.

STATION		BOEING CARD NO.
TAIL NO.	SAS BOEING 767 TASK CARD	30-001-01-2
DATE		AIRLINE CARD NO.

SKILL	WORK AREA	RELATED TASK	INTERVAL	PHASE	MPD REV	TASK CARD REVISION
AIRPL	R WING LE	W-30-002-01-2	4C	14848	012	AUG 22/06

TASK	TITLE	STRUCTURAL ILLUSTRATION REFERENCE	APPLICABILITY AIRPLANE	APPLICABILITY ENGINE
FUNCTIONAL	RIGHT WING TAI TEMPERATURE SWITCH		NOTE	ALL

ZONES	ACCESS PANELS
211 621	621ANB

MECH	INSP	MPD ITEM NUMBER
		30-11-03-4A

FUNCTIONALLY CHECK THE SETTING OF THE RIGHT WING TAI TEMPERATURE SWITCHES AND CIRCUIT VERIFICATION (REMOVAL FROM DUCT REQUIRED).

AIRPLANE NOTE: THIS TASK IS APPLICABLE TO ALL AIRPLANE MODELS WITHOUT PRIMARY ICE DETECTION AND IS NOT APPLICABLE TO THE 767-400ER.

THE FOLLOWING PROCEDURE APPLIES TO THE ON-AIRCRAFT PORTION OF THIS TASK (REMOVAL/INSTALLATION AND CIRCUIT VERIFICATION):

1. Remove the Wing TAI Overheat Switch (Fig. 401)

   A. References

      (1) AMM 06-44-00/201, Wings (Major Zones 500 and 600) Access Doors and Panels

   B. Access

      (1) Location Zones
          521 Leading Edge to Front Spar (Left)
          621 Leading Edge to Front Spar (Right)

      (2) Access Panels
          521 ANB Fixed Wing Lower Panel (Left)
          621 ANB Fixed Wing Lower Panel (Right)

   C. Procedure

      (1) Open this circuit breaker on the overhead circuit breaker panel, P11, and attach DO-NOT-CLOSE tag:

          (a) 11A31, ANTI-ICE WING

BOEING PROPRIETARY - Copyright (C) - Unpublished Work - See title page for details.

(2) When you remove the left wing TAI overheat switch (S398), remove the fixed wing lower panel 521 ANB (AMM 06-44-00/201).

(3) When you remove the right wing TAI overheat switch (S399), remove the fixed wing lower panel 621 ANB (AMM 06-44-00/201).

WARNING: LET THE WING TAI DUCT COOL BEFORE YOU TOUCH THE DUCT. THE WING THERMAL ANTI-ICE DUCT CAN BE HOT AND CAUSE INJURY TO PERSONS.

(4) Remove the electrical connector from the wing TAI overheat switch.

(5) Remove the wing TAI overheat switch. Discard the O-ring.

2. Install the Wing TAI Overheat Switch (Fig. 401)

A. Consumable Materials

(1) D00006 Anti-seize Compound, High Temperature - Ease-Off 990

B. References

(1) AMM 06-44-00/201, Wings (Major Zones 500 and 600) Access Doors and Panels

C. Access

(1) Location Zones
521 Leading Edge to Front Spar (Left)
621 Leading Edge to Front Spar (Right)

(2) Access Panels
521 ANB Fixed Wing Lower Panel (Left)
621 ANB Fixed Wing Lower Panel (Right)

D. Procedure

(1) Apply the anti-seize compound to the threads.

(2) Install a new O-ring on the wing TAI overheat switch.

(3) Install the wing TAI overheat switch.

BOEING PROPRIETARY - Copyright (C) - Unpublished Work - See title page for details.

(4) Connect the electrical connector to the wing TAI overheat switch and install the lockwire.

(5) Install the fixed wing lower panel (AMM 06-44-00/201).

(6) Remove the DO-NOT-CLOSE tag and close this circuit breaker on the overhead circuit breaker panel, P11:

(a) 11A31, ANTI-ICE WING

3. Do a Test of the Wing TAI Overheat Switch

A. References

(1) AMM 24-22-00/201, Electrical Power - Control

(2) AMM 49-11-00/201, Auxiliary Power Unit

B. Access

(1) Location Zone
211/212 Control Cabin - Section 41

C. Procedure

(1) Supply electrical power (AMM 24-22-00/201).

(2) Start the APU (AMM 49-11-00/201).

NOTE: The APU is not necessary if you do the wing TAI overheat switch test during engine runup.

(3) Push the L or R ISLN switch/light (air supply control module) (as applicable) on the pilot's overhead panel, P5, to the ON position.

(a) Make sure the white bar light is on.

(4) Push the APU VALVE switch/light (air supply control module) on the P5 panel to the ON position.

(a) Make sure the white bar light is on.

(5) Hold the WING ANTI-ICE WINDOW/PROBE HEAT test switch (on the P61 panel) in the WING ANTI-ICE position.

BOEING PROPRIETARY - Copyright (C) - Unpublished Work - See title page for details.

MECH	INSP

(a) Make sure the applicable light (L or R VALVE) on the P5 panel is on for approximately 2 seconds, goes off for approximately 10-20 seconds, and then stays on.

(6) Release the WING ANTI-ICE WINDOW/PROBE HEAT test switch.

(a) Make sure the applicable light (L or R VALVE) goes off.

(7) Push the APU VALVE switch/light on the P5 panel to the OFF position.

(a) Make sure the white bar light is off.

(8) Push the L or R ISLN switch/light on the P5 panel to the OFF position.

(a) Make sure the white bar light is off.

(9) Stop the APU if it is not necessary (AMM 49-11-00/201).

(10) Remove electrical power if it is not necessary (AMM 24-22-00/201).

BOEING PROPRIETARY - Copyright (C) - Unpublished Work - See title page for details.

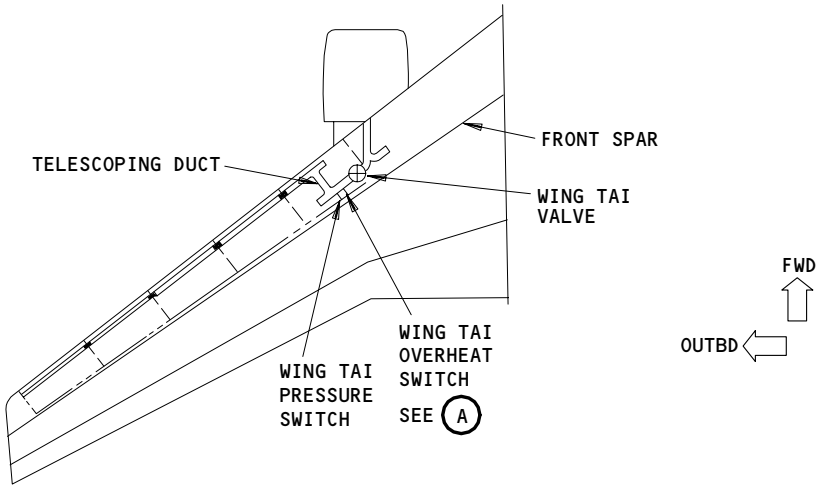

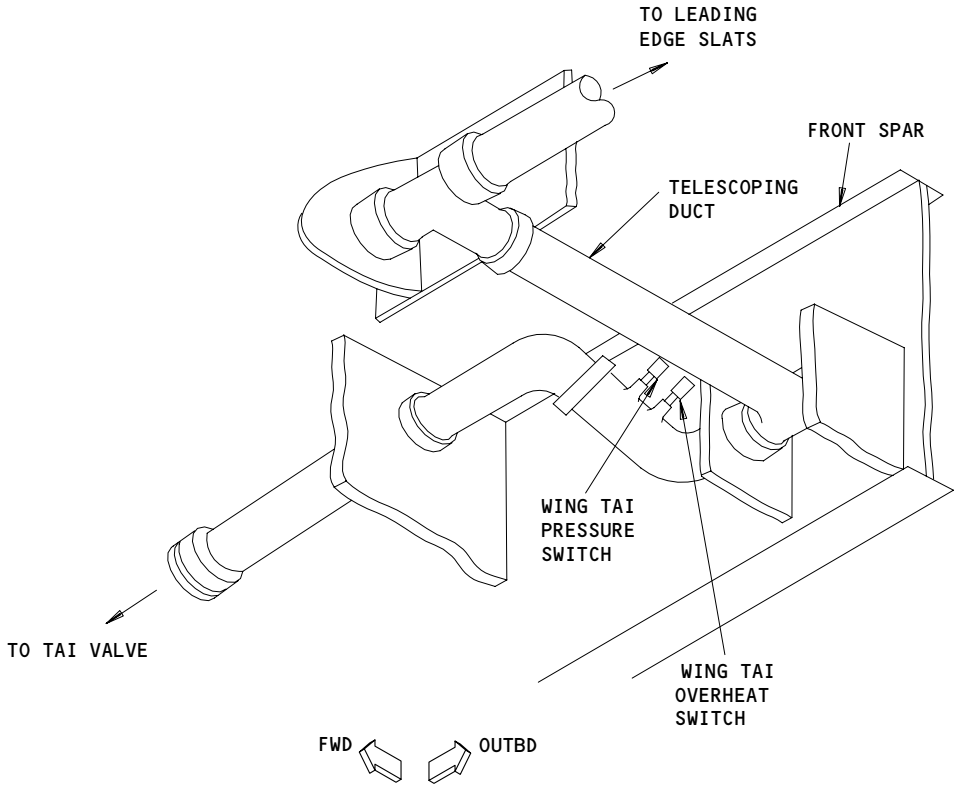

WING TAI OVERHEAT SWITCH

A

Wing Thermal Anti-Ice (TAI) Overheat Switch Installation
Figure 401

BOEING PROPRIETARY - Copyright (C) - Unpublished Work - See title page for details.

STATION		BOEING CARD NO.
TAIL NO.	SAS BOEING 767 TASK CARD	30-002-01-1
DATE		AIRLINE CARD NO.

SKILL	WORK AREA	RELATED TASK	INTERVAL	PHASE	MPD REV	TASK CARD REVISION
AIRPL	L WING LE	W-30-001-01-1	4C	14848	018	APR 22/09

TASK	TITLE	STRUCTURAL ILLUSTRATION REFERENCE	APPLICABILITY AIRPLANE	APPLICABILITY ENGINE
FUNCTIONAL	LEFT WING TAI PRESSURE SWITCH		ALL	ALL

ZONES	ACCESS PANELS
211 511 521	511PT 521ANB

MECH	INSP	MPD ITEM NUMBER

FUNCTIONALLY CHECK THE SETTING OF THE LEFT WING TAI PRESSURE SWITCHES AND CIRCUIT VERIFICATION (REMOVAL FROM DUCT REQUIRED). 30-11-04-4A

THE FOLLOWING PROCEDURE APPLIES TO THE ON-AIRCRAFT PORTION OF THIS TASK (REMOVAL/INSTALLATION AND CIRCUIT VERIFICATION):

1. Remove the Wing TAI Pressure Switch (Fig. 401)

   A. References

      (1) AMM 06-44-00/201 Wings (Major Zones 500 and 600) Access Doors and Panels

   B. Access

      (1) Location Zones
          521 Leading Edge to Front Spar (Left)
          621 Leading Edge to Front Spar (Right)

      (2) Access Panels
          521ANB Fixed Wing Lower Panel (Left)
          621ANB Fixed Wing Lower Panel (Right)

   C. Procedure

      (1) Open this circuit breaker on the overhead circuit breaker panel, P11, and attach DO-NOT-CLOSE tag:

          (a) 11A31, ANTI-ICE WING

      (2) For the left wing TAI pressure switch (S400), remove the fixed wing lower panel 521 ANB (AMM 06-44-00/201).

BOEING PROPRIETARY - Copyright (C) - Unpublished Work - See title page for details.

(3) For the right wing TAI pressure switch (S401), remove the fixed wing lower panel 621 ANB (AMM 06-44-00/201).

WARNING: LET THE WING TAI DUCT COOL BEFORE YOU TOUCH THE DUCT. THE WING THERMAL ANTI-ICE DUCT CAN BE HOT AND CAUSE INJURY TO PERSONS.

(4) Remove the electrical connector from the wing TAI pressure switch.

(5) Remove the wing TAI pressure switch and the O-ring packing.

2. Install the Wing TAI Pressure Switch (Fig. 401)

A. Consumable Materials

(1) Bostik NEVER-SEEZ Pure Nickel Special

B. References

(1) AMM 06-44-00/201 Wings (Major Zones 500 and 600) Access Doors and Panels

C. Access

(1) Location Zones
521 Leading Edge to Front Spar (Left)
621 Leading Edge to Front Spar (Right)

(2) Access Panels
521ANB Fixed Wing Lower Panel (Left)
621ANB Fixed Wing Lower Panel (Right)

D. Procedure

(1) Apply the anti-seize compound to the threads.

(2) Install the wing TAI pressure switch with a new O-ring packing.

(3) Connect the electrical connector to the wing TAI pressure switch and install the lockwire.

(4) Install the fixed wing lower panel.

BOEING PROPRIETARY - Copyright (C) - Unpublished Work - See title page for details.

(5) Remove the DO-NOT-CLOSE tag and close this circuit breaker on the overhead circuit breaker panel P11.

(a) 11A31, ANTI-ICE WING

3. Do a Test of the Wing TAI Pressure Switch

A. Equipment

(1) Blanking Plate - A30002-1

B. Access

(1) Location Zones

511/521	Leading Edge to Front Spar (Left)
611/621	Leading Edge to Front Spar (Right)

(2) Access Panels

511 PT	Fixed Wing Upper Panel (Left)
611 PT	Fixed Wing Upper Panel (Right)
521 ANB	Fixed Wing Lower Panel (Left)
621 ANB	Fixed Wing Lower Panel (Right)

C. References

(1) AMM 06-44-00/201, Wings (Major Zones 500 and 600) Access Doors and Panels

(2) AMM 24-22-00/201, Electrical Power - Control

(3) AMM 31-41-00/201, Engine Indication and Crew Alerting System (EICAS)

(4) AMM 36-00-00/201, Pneumatic Power

D. Procedure

(1) Remove the fixed wing upper panel 511 PT (left) or 611 PT (right) as applicable (AMM 06-44-00/201).

(2) Remove the fixed wing lower panel 521 ANB (left) or 621 ANB (right) as applicable.

BOEING PROPRIETARY - Copyright (C) - Unpublished Work - See title page for details.

MECH	INSP

(3) Remove the first duct clamp that is downstream of the wing TAI pressure switch and install the blanking plate. Install the duct clamp.

NOTE: The blanking plate causes blockage of the piccolo holes in the duct downstream of the switch. This blockage lets enough pressure upstream to operate the wing TAI pressure switch during the test.

(4) Supply electrical power (AMM 24-22-00/201).

(5) Make sure the Engine Indication and Crew Alerting System (EICAS) operates (AMM 31-41-00/201).

(6) Push the ECS MSG switch on the P61 right panel to ON.

(7) Supply pneumatic pressure at 35 to 40 psi (AMM 36-00-00/201).

(8) Push the L or R ISLN switch/light (air supply control module) (as applicable) on P5 panel to ON.

(a) Make sure the white bar light is ON.

WARNING: BE CAREFUL WHEN YOU HOLD THE TAI VALVE OPEN. THE WING TAI VALVE IS HOT WHEN PNEUMATIC PRESSURE IS SUPPLIED. THE HOT VALVE CAN CAUSE INJURY.

(9) Manually set the applicable wing TAI valve to the fully open position and hold.

NOTE: The valve is spring loaded.

(10) Make sure the L or R WING TAI VALVE message (as applicable) is shown after 25 sec. on the lower EICAS display.

WARNING: RELEASE THE PRESSURE IN THE PNEUMATIC DUCT BEFORE YOU REMOVE A PNEUMATIC SYSTEM COMPONENT. THE HOT, HIGH PRESSURE AIR CAN CAUSE INJURY TO PERSONS.

(11) Decrease the air pressure to zero psi.

BOEING PROPRIETARY - Copyright (C) - Unpublished Work - See title page for details.

MECH	INSP

(12) Manually release the TAI valve to the closed position.

(13) Make sure the message stays shown on the lower EICAS display.

(14) Remove the pneumatic power if it is not necessary (AMM 36-00-00/201).

(15) Do the EICAS erase procedure (AMM 31-41-00/201).

(16) Remove electrical power if it is not necessary (AMM 24-22-00/201).

CAUTION: REMOVE THE BLANKING PLATE FROM THE DUCT. THE WING TAI SYSTEM WILL NOT OPERATE WITH THE BLANKING PLATE INSTALLED.

(17) Remove the blanking plate from the TAI duct downstream of the wing TAI pressure switch and install the duct clamp.

E. Do a leak test of TAI duct clamp.

(1) Supply pneumatic pressure at 35 to 40 psi (AMM 36-00-00/201).

(a) Make sure the white bar light is on.

NOTE: If there is internal leakage of the valve or if the valve is partially open, the pressure switch can close. This can cause the L or R WING TAI VALVE message to show on the bottom of the EICAS display before the valve is mannually opened.

WARNING: BE CAREFUL WHEN YOU HOLD THE TAI VALVE OPEN. THE WING TAI VALVE IS HOT WHEN PNEUMATIC PRESSURE IS SUPPLIED. THE HOT VALVE CAN CAUSE INJURY.

(2) Manually set the applicable wing TAI valve to the fully open position and hold.

NOTE: The valve is spring loaded.

(3) Make sure that the L or R WING TAI VALVE EICAS message (as applicable) does not show after 25 sec. on the lower EICAS display.

BOEING PROPRIETARY - Copyright (C) - Unpublished Work - See title page for details.

MECH	INSP

(4) Do a check of the duct and clamp connections in the reinstalled area for air leakage.

NOTE: Air leakage is when you feel the airflow with your hand hand at a distance of 12 inches from a point on the duct joint or connection.

WARNING: RELEASE THE PRESSURE IN THE PNEUMATIC DUCT BEFORE YOU REMOVE A PNEUMATIC SYSTEM COMPONENT. THE HOT, HIGH PRESSURE AIR CAN CAUSE INJURY TO PERSONS.

(5) Decrease the air pressure to zero psi.

(6) Repair air leakage by joint or coupling adjustment or replacement of the duct.

(7) Do a leak test again after you do a repair.

(8) Manually release the TAI valve to the closed position.

(9) Remove the pneumatic power if it is not necessary (AMM 36-00-00/201).

(10) Remove electrical power if it is not necessary (AMM 24-22-00/201).

(11) Install the wing access panels.

4. Circuit Verification for the Wing TAI Pressure Switch

NOTE: This test does not use a blanking plate. This test does a check of the system circuit when there is a problem. It is not intended to use for pressure switch post-installation testing.

A. References

(1) AMM 06-44-00/201 Wings (Major Zones 500 and 600) Access Doors and Panels

(2) AMM 24-22-00/201, Electrical Power - Control

(3) AMM 31-41-00/201, Engine Indication and Crew Alerting System (EICAS)

B. Access

BOEING PROPRIETARY - Copyright (C) - Unpublished Work - See title page for details.

MECH	INSP

(1) Location Zones
521 Leading Edge to Front Spar (Left)
621 Leading Edge to Front Spar (Right)

(2) Access Panels
521ANB Fixed Wing Lower Panel (Left)
621ANB Fixed Wing Lower Panel (Right)

C. Procedure

(1) Supply electrical power (AMM 24-22-00/201).

(2) Make sure the Engine Indication and Crew Alerting System (EICAS) operates (AMM 31-41-00/201).

(3) Push the ECS MSG switch on the P61 right side panel to show the maintenance level messages.

(4) Disconnect the electrical connector from the wing TAI pressure switch.

(5) Connect a jumper between pins 2 and 3.

(6) Make sure the L or R WING TAI VALVE message (as applicable) is shown on the EICAS display.

(7) Remove the jumper.

(8) Connect the electrical connector to the wing TAI pressure switch.

(9) Do the EICAS erase procedure (AMM 31-41-00/201).

(10) Remove electrical power if it is not necessary (AMM 24-22-00/201).

BOEING PROPRIETARY - Copyright (C) - Unpublished Work - See title page for details.

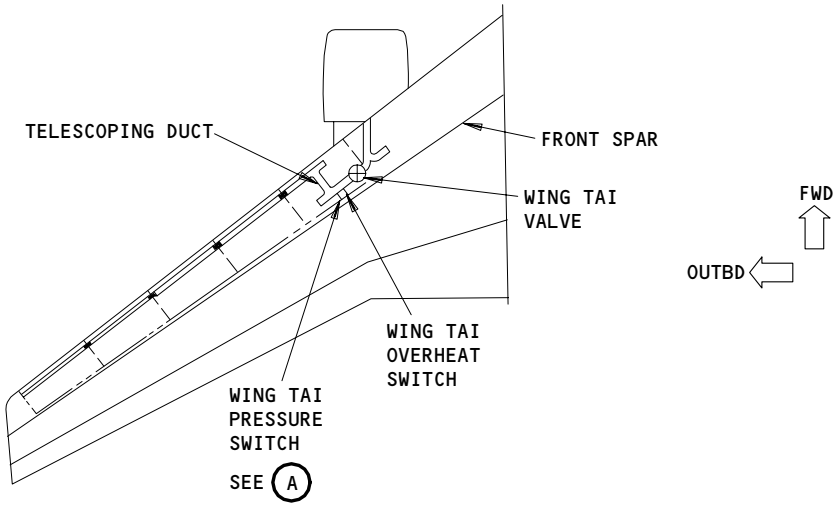

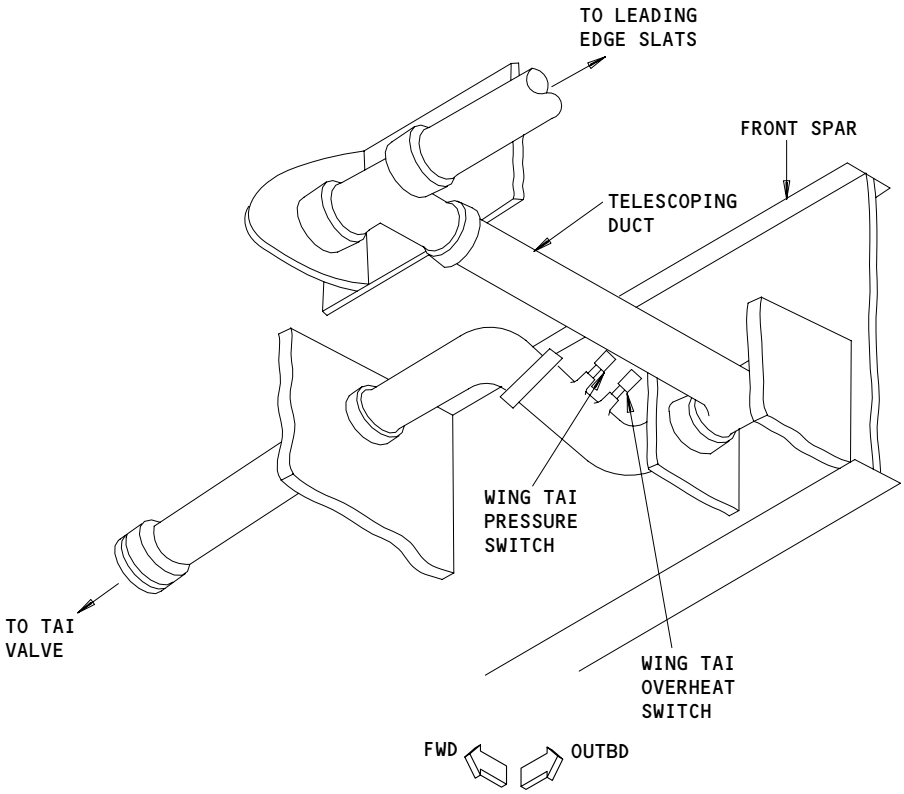

WING TAI PRESSURE SWITCH

A

Wing Thermal Anti-Ice (TAI) Pressure Switch Installation
Figure 401

BOEING PROPRIETARY - Copyright (C) - Unpublished Work - See title page for details.

STATION		BOEING CARD NO.
TAIL NO.	SAS BOEING 767 TASK CARD	30-002-01-2
DATE		AIRLINE CARD NO.

SKILL	WORK AREA	RELATED TASK	INTERVAL	PHASE	MPD REV	TASK CARD REVISION
AIRPL	R WING LE	W-30-001-01-2	4C	14848	018	APR 22/09

TASK	TITLE	STRUCTURAL ILLUSTRATION REFERENCE	APPLICABILITY AIRPLANE	APPLICABILITY ENGINE
FUNCTIONAL	RIGHT WING TAI PRESSURE SWITCH		ALL	ALL

ZONES	ACCESS PANELS
211 611 621	611PT 621ANB

MECH	INSP	MPD ITEM NUMBER

FUNCTIONALLY CHECK THE SETTING OF THE RIGHT WING TAI PRESSURE SWITCHES AND CIRCUIT VERIFICATION (REMOVAL FROM DUCT REQUIRED). 30-11-04-4A

THE FOLLOWING PROCEDURE APPLIES TO THE ON-AIRCRAFT PORTION OF THIS TASK (REMOVAL/INSTALLATION AND CIRCUIT VERIFICATION):

1. Remove the Wing TAI Pressure Switch (Fig. 401)

   A. References

      (1) AMM 06-44-00/201 Wings (Major Zones 500 and 600) Access Doors and Panels

   B. Access

      (1) Location Zones
          521 Leading Edge to Front Spar (Left)
          621 Leading Edge to Front Spar (Right)

      (2) Access Panels
          521ANB Fixed Wing Lower Panel (Left)
          621ANB Fixed Wing Lower Panel (Right)

   C. Procedure

      (1) Open this circuit breaker on the overhead circuit breaker panel, P11, and attach DO-NOT-CLOSE tag:

          (a) 11A31, ANTI-ICE WING

      (2) For the left wing TAI pressure switch (S400), remove the fixed wing lower panel 521 ANB (AMM 06-44-00/201).

BOEING PROPRIETARY - Copyright (C) - Unpublished Work - See title page for details.

MECH | INSP

(3) For the right wing TAI pressure switch (S401), remove the fixed wing lower panel 621 ANB (AMM 06-44-00/201).

WARNING: LET THE WING TAI DUCT COOL BEFORE YOU TOUCH THE DUCT. THE WING THERMAL ANTI-ICE DUCT CAN BE HOT AND CAUSE INJURY TO PERSONS.

(4) Remove the electrical connector from the wing TAI pressure switch.

(5) Remove the wing TAI pressure switch and the O-ring packing.

2. Install the Wing TAI Pressure Switch (Fig. 401)

A. Consumable Materials

(1) Bostik NEVER-SEEZ Pure Nickel Special

B. References

(1) AMM 06-44-00/201 Wings (Major Zones 500 and 600) Access Doors and Panels

C. Access

(1) Location Zones
521 Leading Edge to Front Spar (Left)
621 Leading Edge to Front Spar (Right)

(2) Access Panels
521ANB Fixed Wing Lower Panel (Left)
621ANB Fixed Wing Lower Panel (Right)

D. Procedure

(1) Apply the anti-seize compound to the threads.

(2) Install the wing TAI pressure switch with a new O-ring packing.

(3) Connect the electrical connector to the wing TAI pressure switch and install the lockwire.

(4) Install the fixed wing lower panel.

BOEING PROPRIETARY - Copyright (C) - Unpublished Work - See title page for details.

(5) Remove the DO-NOT-CLOSE tag and close this circuit breaker on the overhead circuit breaker panel P11.

(a) 11A31, ANTI-ICE WING

3. Do a Test of the Wing TAI Pressure Switch

A. Equipment

(1) Blanking Plate - A30002-1

B. Access

(1) Location Zones

511/521	Leading Edge to Front Spar (Left)
611/621	Leading Edge to Front Spar (Right)

(2) Access Panels

511 PT	Fixed Wing Upper Panel (Left)
611 PT	Fixed Wing Upper Panel (Right)
521 ANB	Fixed Wing Lower Panel (Left)
621 ANB	Fixed Wing Lower Panel (Right)

C. References

(1) AMM 06-44-00/201, Wings (Major Zones 500 and 600) Access Doors and Panels

(2) AMM 24-22-00/201, Electrical Power - Control

(3) AMM 31-41-00/201, Engine Indication and Crew Alerting System (EICAS)

(4) AMM 36-00-00/201, Pneumatic Power

D. Procedure

(1) Remove the fixed wing upper panel 511 PT (left) or 611 PT (right) as applicable (AMM 06-44-00/201).

(2) Remove the fixed wing lower panel 521 ANB (left) or 621 ANB (right) as applicable.

BOEING PROPRIETARY - Copyright (C) - Unpublished Work - See title page for details.

MECH	INSP

(3) Remove the first duct clamp that is downstream of the wing TAI pressure switch and install the blanking plate. Install the duct clamp.

NOTE: The blanking plate causes blockage of the piccolo holes in the duct downstream of the switch. This blockage lets enough pressure upstream to operate the wing TAI pressure switch during the test.

(4) Supply electrical power (AMM 24-22-00/201).

(5) Make sure the Engine Indication and Crew Alerting System (EICAS) operates (AMM 31-41-00/201).

(6) Push the ECS MSG switch on the P61 right panel to ON.

(7) Supply pneumatic pressure at 35 to 40 psi (AMM 36-00-00/201).

(8) Push the L or R ISLN switch/light (air supply control module) (as applicable) on P5 panel to ON.

(a) Make sure the white bar light is ON.

WARNING: BE CAREFUL WHEN YOU HOLD THE TAI VALVE OPEN. THE WING TAI VALVE IS HOT WHEN PNEUMATIC PRESSURE IS SUPPLIED. THE HOT VALVE CAN CAUSE INJURY.

(9) Manually set the applicable wing TAI valve to the fully open position and hold.

NOTE: The valve is spring loaded.

(10) Make sure the L or R WING TAI VALVE message (as applicable) is shown after 25 sec. on the lower EICAS display.

WARNING: RELEASE THE PRESSURE IN THE PNEUMATIC DUCT BEFORE YOU REMOVE A PNEUMATIC SYSTEM COMPONENT. THE HOT, HIGH PRESSURE AIR CAN CAUSE INJURY TO PERSONS.

(11) Decrease the air pressure to zero psi.

BOEING PROPRIETARY - Copyright (C) - Unpublished Work - See title page for details.

MECH | INSP

(12) Manually release the TAI valve to the closed position.

(13) Make sure the message stays shown on the lower EICAS display.

(14) Remove the pneumatic power if it is not necessary (AMM 36-00-00/201).

(15) Do the EICAS erase procedure (AMM 31-41-00/201).

(16) Remove electrical power if it is not necessary (AMM 24-22-00/201).

CAUTION: REMOVE THE BLANKING PLATE FROM THE DUCT. THE WING TAI SYSTEM WILL NOT OPERATE WITH THE BLANKING PLATE INSTALLED.

(17) Remove the blanking plate from the TAI duct downstream of the wing TAI pressure switch and install the duct clamp.

E. Do a leak test of TAI duct clamp.

(1) Supply pneumatic pressure at 35 to 40 psi (AMM 36-00-00/201).

(a) Make sure the white bar light is on.

NOTE: If there is internal leakage of the valve or if the valve is partially open, the pressure switch can close. This can cause the L or R WING TAI VALVE message to show on the bottom of the EICAS display before the valve is mannually opened.

WARNING: BE CAREFUL WHEN YOU HOLD THE TAI VALVE OPEN. THE WING TAI VALVE IS HOT WHEN PNEUMATIC PRESSURE IS SUPPLIED. THE HOT VALVE CAN CAUSE INJURY.

(2) Manually set the applicable wing TAI valve to the fully open position and hold.

NOTE: The valve is spring loaded.

(3) Make sure that the L or R WING TAI VALVE EICAS message (as applicable) does not show after 25 sec. on the lower EICAS display.

BOEING PROPRIETARY - Copyright (C) - Unpublished Work - See title page for details.

MECH	INSP

(4) Do a check of the duct and clamp connections in the reinstalled area for air leakage.

NOTE: Air leakage is when you feel the airflow with your hand hand at a distance of 12 inches from a point on the duct joint or connection.

WARNING: RELEASE THE PRESSURE IN THE PNEUMATIC DUCT BEFORE YOU REMOVE A PNEUMATIC SYSTEM COMPONENT. THE HOT, HIGH PRESSURE AIR CAN CAUSE INJURY TO PERSONS.

(5) Decrease the air pressure to zero psi.

(6) Repair air leakage by joint or coupling adjustment or replacement of the duct.

(7) Do a leak test again after you do a repair.

(8) Manually release the TAI valve to the closed position.

(9) Remove the pneumatic power if it is not necessary (AMM 36-00-00/201).

(10) Remove electrical power if it is not necessary (AMM 24-22-00/201).

(11) Install the wing access panels.

4. Circuit Verification for the Wing TAI Pressure Switch

NOTE: This test does not use a blanking plate. This test does a check of the system circuit when there is a problem. It is not intended to use for pressure switch post-installation testing.

A. References

(1) AMM 06-44-00/201 Wings (Major Zones 500 and 600) Access Doors and Panels

(2) AMM 24-22-00/201, Electrical Power - Control

(3) AMM 31-41-00/201, Engine Indication and Crew Alerting System (EICAS)

B. Access

BOEING PROPRIETARY - Copyright (C) - Unpublished Work - See title page for details.

MECH	INSP

(1) Location Zones
521 Leading Edge to Front Spar (Left)
621 Leading Edge to Front Spar (Right)

(2) Access Panels
521ANB Fixed Wing Lower Panel (Left)
621ANB Fixed Wing Lower Panel (Right)

C. Procedure

(1) Supply electrical power (AMM 24-22-00/201).

(2) Make sure the Engine Indication and Crew Alerting System (EICAS) operates (AMM 31-41-00/201).

(3) Push the ECS MSG switch on the P61 right side panel to show the maintenance level messages.

(4) Disconnect the electrical connector from the wing TAI pressure switch.

(5) Connect a jumper between pins 2 and 3.

(6) Make sure the L or R WING TAI VALVE message (as applicable) is shown on the EICAS display.

(7) Remove the jumper.

(8) Connect the electrical connector to the wing TAI pressure switch.

(9) Do the EICAS erase procedure (AMM 31-41-00/201).

(10) Remove electrical power if it is not necessary (AMM 24-22-00/201).

BOEING PROPRIETARY - Copyright (C) - Unpublished Work - See title page for details.

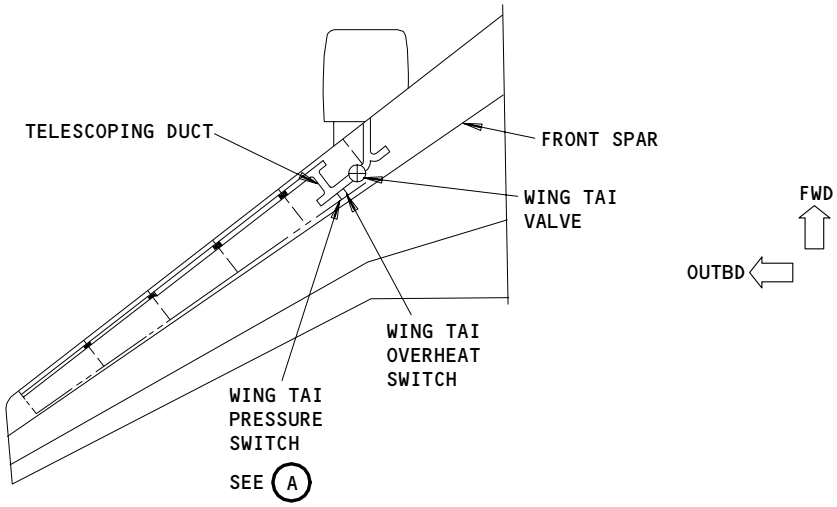

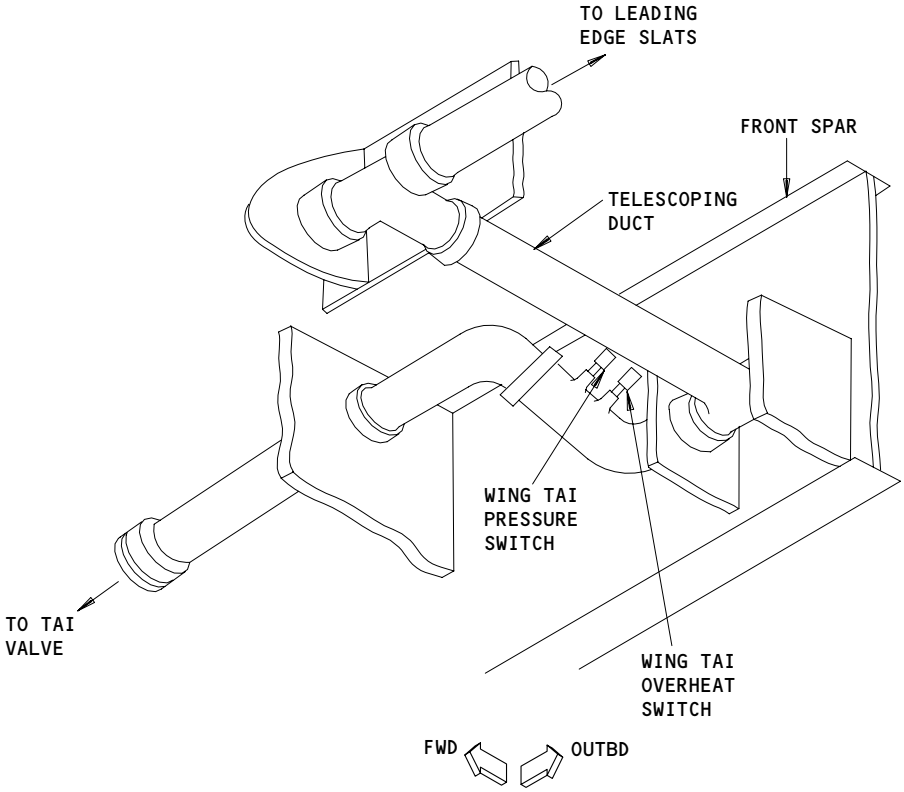

WING TAI PRESSURE SWITCH

A

Wing Thermal Anti-Ice (TAI) Pressure Switch Installation
Figure 401

BOEING PROPRIETARY - Copyright (C) - Unpublished Work - See title page for details.

STATION		BOEING CARD NO.
TAIL NO.	SAS BOEING 767 TASK CARD	30-003-03-1
DATE		AIRLINE CARD NO.

SKILL	WORK AREA	RELATED TASK	INTERVAL	PHASE	MPD REV	TASK CARD REVISION
ENGIN	STRUT 1		2C	12424	012	DEC 22/05

TASK	TITLE	STRUCTURAL ILLUSTRATION REFERENCE	APPLICABILITY AIRPLANE	APPLICABILITY ENGINE
FUNCTIONAL	ENGINE 1 INLET TAI PRESSURE SWITCH		ALL	4000

ZONES	ACCESS PANELS
211 431	431DT

MECH	INSP	MPD ITEM NUMBER

FUNCTIONALLY CHECK THE SETTING OF THE ENGINE 1 INLET TAI PRESSURE SWITCHES AND CIRCUIT VERIFICATION. 30-21-00-5A

1. Pressure Switch Setting Check- Engine Inlet TAI System (Fig. 501, 502)

NOTE: This is a scheduled maintenance task.

A. Equipment

(1) Gage - Pressure 0-50 psig ± 1% accuracy with 30 feet of hose; Commercially available

B. References

(1) AMM 06-43-00/201, Engine and Nacelle Strut Access Doors and Panels

(2) AMM 24-22-00/201, Electrical Power - Control

(3) AMM 31-41-00/201, Engine Indication and Crew Alerting Systems (EICAS)

(4) AMM 78-31-00/201, Thrust Reverser System

C. Access

(1) Location Zones
431/441 Forward Nacelle Strut Fairing

(2) Access Panels
431DT/441DT

D. Prepare for the Test

BOEING PROPRIETARY - Copyright (C) - Unpublished Work - See title page for details.

MECH	INSP

WARNING: DO THE DEACTIVATION PROCEDURE TO PREVENT THE OPERATION OF THE THRUST REVERSER. THE ACCIDENTAL OPERATION OF THE THRUST REVERSER CAN CAUSE INJURIES TO PERSONS AND DAMAGE TO EQUIPMENT.

(1) Do the deactivation procedure for the thrust reverser for ground maintenance (AMM 78-31-00/201).

(2) Remove the aft section of the forward strut fairing to get access to the engine inlet TAI pressure switch (AMM 30-21-01/401).

(3) Supply electrical power (AMM 24-22-00/201).

(4) Make sure that EICAS operates (AMM 31-41-00/201).

E. Procedure

(1) Do a test of the engine inlet TAI pressure switch:

(a) Disconnect the pressure switch sense tube from the elbow fitting on the engine TAI duct.

(b) Connect the ground air source directly to the pressure switch sense tube.

(c) Supply an air pressure of 34.5 +/- 4.5 psi (30-39 psi).

(d) Make sure the status message, L (or R) ENG TAI VALVE, shows on the status page of display.

(e) Remove the ground air source.

(f) Do the EICAS status page erase procedure (AMM 31-41-00/201).

(g) Make sure the status message, L (R) ENG TAI VALVE, does not show on the status page of the display.

(h) Install the elbow fitting in the duct.

(i) Connect the pressure switch sense tube to the elbow fitting.

F. Put the Airplane Back to Its Usual Condition

(1) Install the applicable access panel(s) (AMM 06-43-00/201).

BOEING PROPRIETARY - Copyright (C) - Unpublished Work - See title page for details.

MECH	INSP	
		(2) Do the activation procedure for the thrust reverser (AMM 78-31-00/201).
		(3) Remove electrical power if it is not necessary (AMM 24-22-00/201).

BOEING PROPRIETARY - Copyright (C) - Unpublished Work - See title page for details.

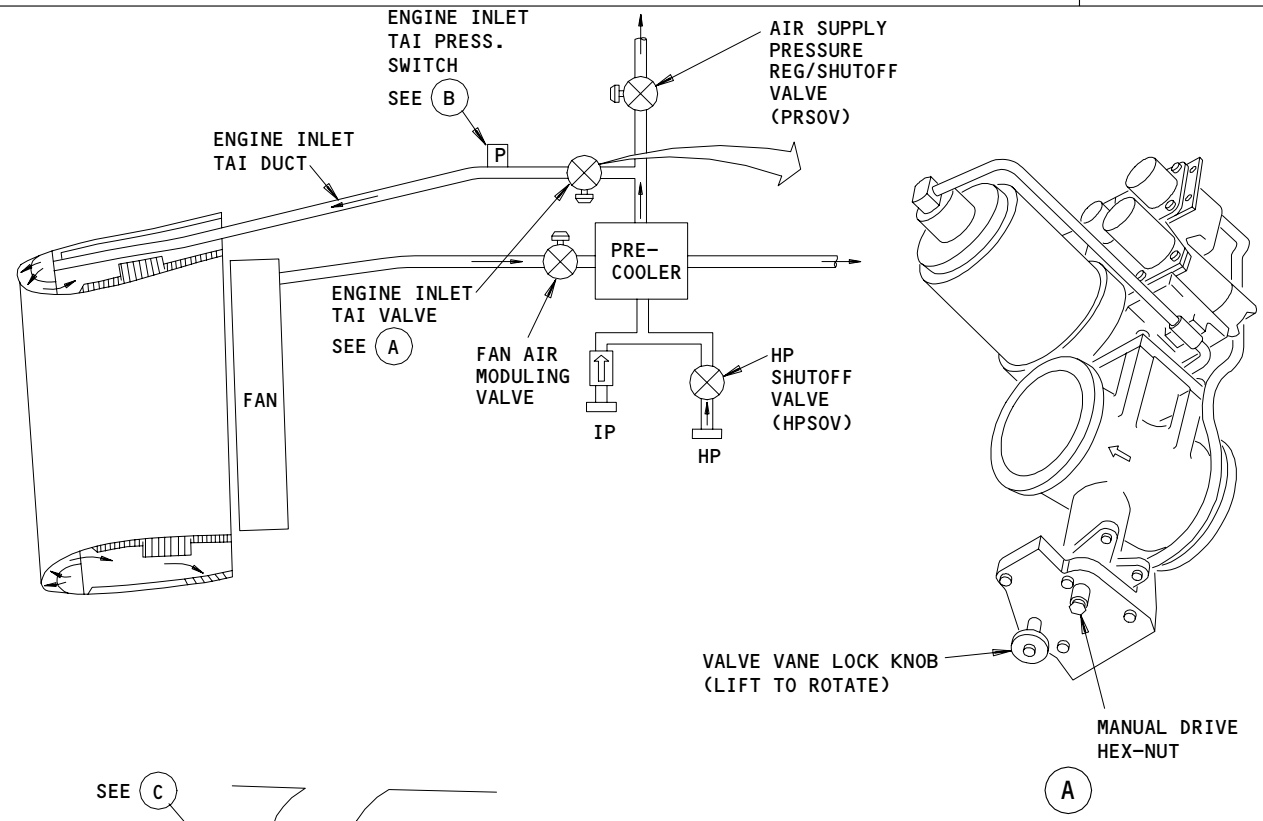

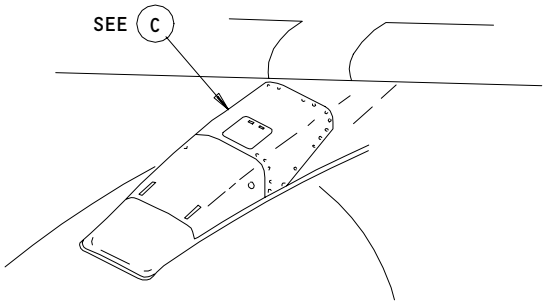

FORWARD STRUT FAIRING

B

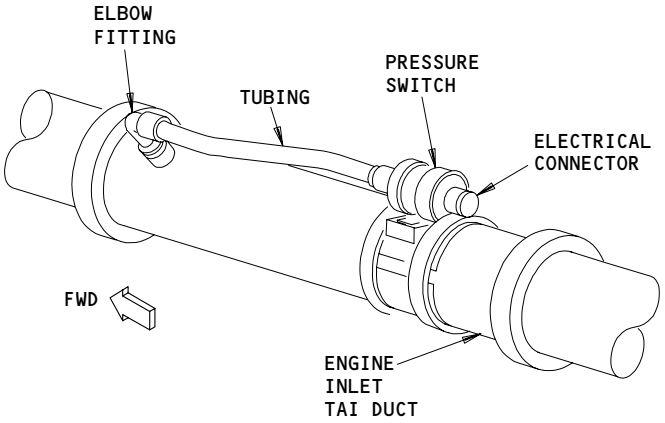

ENGINE INLET TAI PRESSURE SWITCH

C

Engine Inlet TAI Components
Figure 501

BOEING PROPRIETARY - Copyright (C) - Unpublished Work - See title page for details.

STATION		BOEING CARD NO.
TAIL NO.	SAS BOEING 767 TASK CARD	30-003-03-2
DATE		AIRLINE CARD NO.

SKILL	WORK AREA	RELATED TASK	INTERVAL	PHASE	MPD REV	TASK CARD REVISION
ENGIN	STRUT 2		2C	12424	012	DEC 22/05

TASK	TITLE	STRUCTURAL ILLUSTRATION REFERENCE	APPLICABILITY AIRPLANE	APPLICABILITY ENGINE
FUNCTIONAL	ENGINE 2 INLET TAI PRESSURE SWITCH		ALL	4000

ZONES	ACCESS PANELS
211 441	441DT

MECH	INSP	MPD ITEM NUMBER

FUNCTIONALLY CHECK THE SETTING OF THE ENGINE 2 INLET TAI PRESSURE SWITCHES AND CIRCUIT VERIFICATION. 30-21-00-5A

1. Pressure Switch Setting Check- Engine Inlet TAI System (Fig. 501, 502)

NOTE: This is a scheduled maintenance task.

A. Equipment

(1) Gage - Pressure 0-50 psig ± 1% accuracy with 30 feet of hose; Commercially available

B. References

(1) AMM 06-43-00/201, Engine and Nacelle Strut Access Doors and Panels

(2) AMM 24-22-00/201, Electrical Power - Control

(3) AMM 31-41-00/201, Engine Indication and Crew Alerting Systems (EICAS)

(4) AMM 78-31-00/201, Thrust Reverser System

C. Access

(1) Location Zones
431/441 Forward Nacelle Strut Fairing

(2) Access Panels
431DT/441DT

D. Prepare for the Test

BOEING PROPRIETARY - Copyright (C) - Unpublished Work - See title page for details.

MECH	INSP

WARNING: DO THE DEACTIVATION PROCEDURE TO PREVENT THE OPERATION OF THE THRUST REVERSER. THE ACCIDENTAL OPERATION OF THE THRUST REVERSER CAN CAUSE INJURIES TO PERSONS AND DAMAGE TO EQUIPMENT.

(1) Do the deactivation procedure for the thrust reverser for ground maintenance (AMM 78-31-00/201).

(2) Remove the aft section of the forward strut fairing to get access to the engine inlet TAI pressure switch (AMM 30-21-01/401).

(3) Supply electrical power (AMM 24-22-00/201).

(4) Make sure that EICAS operates (AMM 31-41-00/201).

E. Procedure

(1) Do a test of the engine inlet TAI pressure switch:

(a) Disconnect the pressure switch sense tube from the elbow fitting on the engine TAI duct.

(b) Connect the ground air source directly to the pressure switch sense tube.

(c) Supply an air pressure of 34.5 +/- 4.5 psi (30-39 psi).

(d) Make sure the status message, L (or R) ENG TAI VALVE, shows on the status page of display.

(e) Remove the ground air source.

(f) Do the EICAS status page erase procedure (AMM 31-41-00/201).

(g) Make sure the status message, L (R) ENG TAI VALVE, does not show on the status page of the display.

(h) Install the elbow fitting in the duct.

(i) Connect the pressure switch sense tube to the elbow fitting.

F. Put the Airplane Back to Its Usual Condition

(1) Install the applicable access panel(s) (AMM 06-43-00/201).

BOEING PROPRIETARY - Copyright (C) - Unpublished Work - See title page for details.

MECH	INSP	
		(2) Do the activation procedure for the thrust reverser (AMM 78-31-00/201).
		(3) Remove electrical power if it is not necessary (AMM 24-22-00/201).

BOEING PROPRIETARY - Copyright (C) - Unpublished Work - See title page for details.

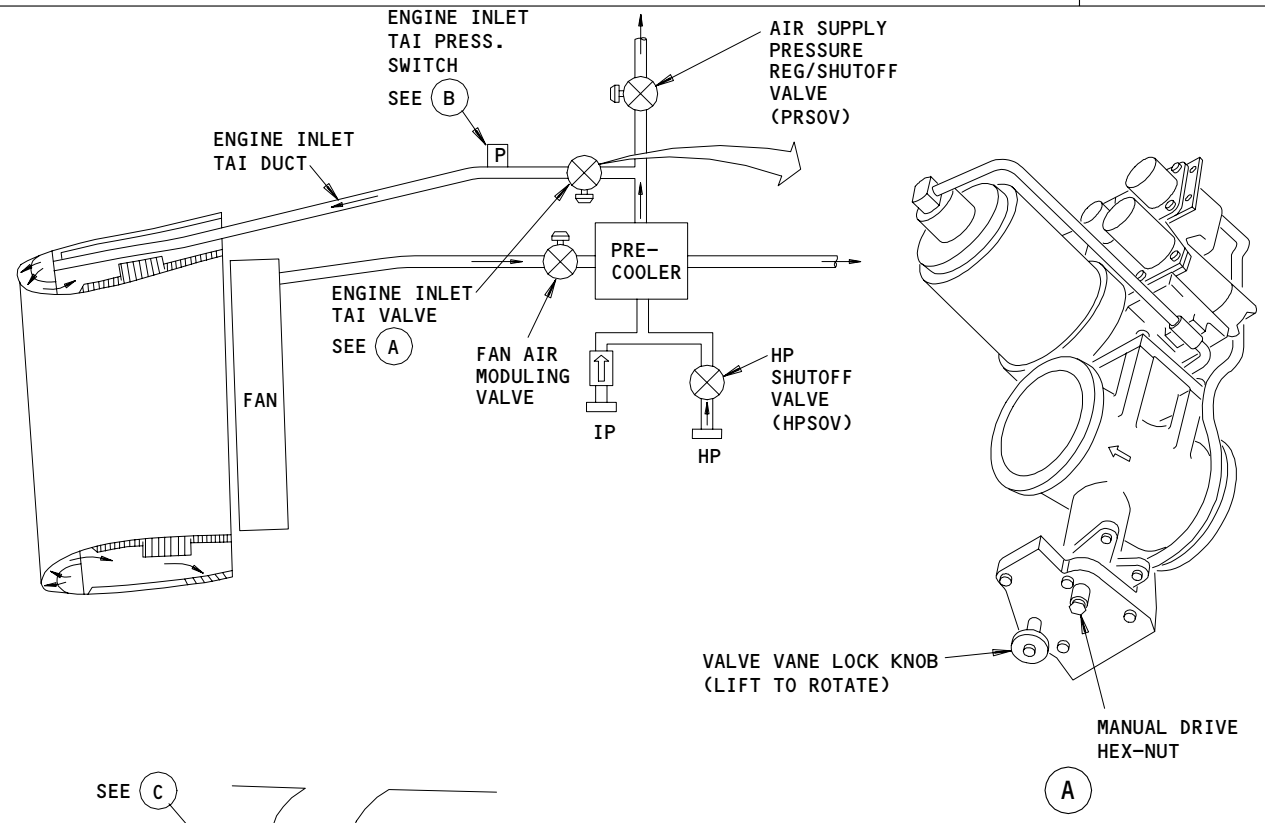

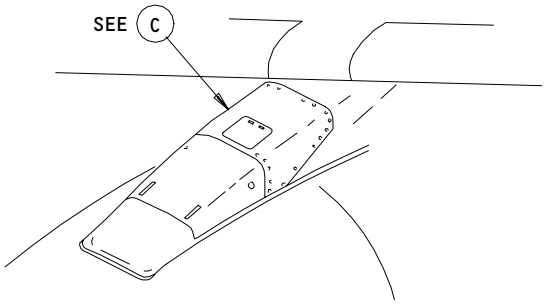

FORWARD STRUT FAIRING

B

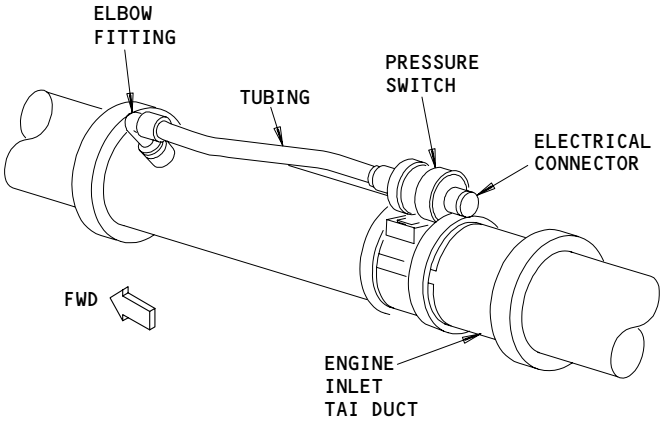

ENGINE INLET TAI PRESSURE SWITCH

C

Engine Inlet TAI Components
Figure 501

BOEING PROPRIETARY - Copyright (C) - Unpublished Work - See title page for details.

STATION		BOEING CARD NO.
TAIL NO.	SAS BOEING 767 TASK CARD	30-007-01
DATE		AIRLINE CARD NO.

SKILL	WORK AREA	RELATED TASK	INTERVAL	PHASE	MPD REV	TASK CARD REVISION
AIRPL	CREW CABIN		2C	12424	007	AUG 22/05

TASK	TITLE	STRUCTURAL ILLUSTRATION REFERENCE	APPLICABILITY AIRPLANE	APPLICABILITY ENGINE
OPERATIONAL	PRIMARY ICE DETECTION SYSTEM		NOTE	ALL

ZONES	ACCESS PANELS
211 212	

MECH	INSP	MPD ITEM NUMBER

OPERATIONALLY CHECK THE PRIMARY ICE DETECTION SYSTEM. 30-81-00-5A

AIRPLANE NOTE: AIRPLANES WITH PRIMARY ICE DETECTION SYSTEM.

1. Operational Test - Primary Ice Detection System

A. References

(1) AMM 24-22-00/201, Electrical Power - Control

(2) AMM 31-41-00/201, Engine Indication and Crew Alerting System (EICAS)

(3) AMM 32-09-02/201, Air/Ground Relays

B. Access

(1) Location Zones
211/212 Control Cabin - Section 41

C. Procedure

WARNING: DO NOT TOUCH THE ICE DETECTOR PROBES AFTER YOU SUPPLY ELECTRICAL POWER. ELECTRICAL POWER CAN CAUSE THE PROBE HEATERS TO OPERATE. HOT ICE DETECTOR PROBES CAN BADLY BURN YOU.

(1) Supply electrical power (AMM 24-22-00/201).

(2) Make sure the EICAS operates (AMM 31-41-00/201).

(3) Push the ECS MSG button on the right side of the EICAS MAINT panel, P61, to let maintenance level EICAS messages show.

(4) Make sure the engines are not on.

BOEING PROPRIETARY - Copyright (C) - Unpublished Work - See title page for details.

(5) Make sure the L ENG and the R ENG switch-lights on the bleed air supply module on the P5 panel are in the OFF position and the OFF lights are on.

(6) Make sure these circuit breakers on the overhead circuit breaker panel, P11, are closed:

(a) 11A31, WING ANTI-ICE or ANTI-ICE WING

(b) 11C30, POSITION AIR/GND SYS 1

(c) 11T14, LEFT ICE DET

(d) 11T23, RIGHT ICE DET

(e) 11U15, AIR/GND SYS 1

(f) 11U23 or 11U24, POSITION AIR/GND SYS 2

NOTE: This circuit breaker can be located in one of these two locations.

(7) Do these steps to do a test of the primary ice detection system:

(a) Put the L-WING-R ANTI-ICE switch on the P5 panel to the AUTO position.

(b) Put the L-ENGINE-R ANTI-ICE switches on the P5 panel to the OFF position.

(c) Make sure these messages do not show on the EICAS display:

MESSAGE	LEVEL	TYPE
ICING ENGINE	B	Caution
ICING WING	C	Advisory
ICE DETECTORS	C	Advisory
R ENG ANTI-ICE	C	Advisory
L ENG ANTI-ICE	C	Advisory
R WING ANTI-ICE	C	Advisory

BOEING PROPRIETARY - Copyright (C) - Unpublished Work - See title page for details.

L WING ANTI-ICE	C	Advisory
R ICE DETECTOR	S,M	Status, Maintenance
L ICE DETECTOR	S,M	Status, Maintenance

(d) Make sure these lights on the P5 panel do not come on:

1) ICE DET

2) ICING

3) VALVE (wing left and right)

4) VALVE (engine left and right)

(e) Push and hold the ICE DET TEST switch on the P61 panel to the R position for 20 seconds.

(f) After 10 seconds, make sure these messages show on the EICAS display:

1) ICING ENGINE

2) ICING WING

3) R ICE DETECTOR

4) L WING ANTI-ICE

5) R WING ANTI-ICE

(g) Make sure the ICING light on the P5 panel comes on.

(h) Make sure the left and right wing VALVE lights come on at the M10397 module.

(i) Release the ICE DET TEST switch.

(j) After 10 seconds, make sure these messages do not show on the EICAS display:

1) ICING ENGINE

2) ICING WING

BOEING PROPRIETARY - Copyright (C) - Unpublished Work - See title page for details.

MECH	INSP

3) R ICE DETECTOR

4) L WING ANTI-ICE

5) R WING ANTI-ICE

(k) Make sure the ICING light on the P5 panel goes off.

(l) Make sure the left and right wing VALVE lights go off.

(m) Push and hold the ICE DET TEST switch on the P61 panel to the L position for 20 seconds.

(n) After 10 seconds, make sure these messages show on the EICAS display:

1) ICING ENGINE

2) ICING WING

3) L ICE DETECTOR

4) L WING ANTI-ICE

5) R WING ANTI-ICE

(o) Make sure the ICING light on the P5 panel comes on.

(p) Make sure the left and right wing VALVE lights come on.

(q) Release the ICE DET TEST switch.

(r) After 10 seconds, make sure these messages do not show on the EICAS display:

1) ICING ENGINE

2) ICING WING

3) L ICE DETECTOR

4) L WING ANTI-ICE

5) R WING ANTI-ICE

(s) Make sure the ICING light on the P5 panel goes off.

BOEING PROPRIETARY - Copyright (C) - Unpublished Work - See title page for details.

MECH	INSP

(t) Make sure the left and right wing VALVE lights go off.

WARNING: PREPARE THE SAFETY-SENSITIVE SYSTEMS FOR THE AIR MODE BEFORE YOU OPEN THE AIR/GROUND CIRCUIT BREAKERS. IN THE AIR MODE, MANY OF THE AIRPLANE SYSTEMS CAN OPERATE AND CAUSE INJURIES TO PERSONS AND DAMAGE TO EQUIPMENT.

(u) Prepare the safety-sensitive systems for air mode simulation (AMM 32-09-02/201).

(v) Open this(these) circuit breaker(s) on the P11 panel:

1) AIRPLANES WITHOUT THE "LANDING GEAR POSITION AIR/GND SYS 2 ALT" CIRCUIT BREAKER INSTALLED AT PANEL GRID LOCATION 11C29;
11U23 or 11U24, POSITION AIR/GND SYS 2

NOTE: This circuit breaker can be in one of these two locations.

2) AIRPLANES WITH THE "LANDING GEAR POSITION AIR/GND SYS 2 ALT" CIRCUIT BREAKER INSTALLED AT PANEL GRID LOCATION 11C29;
Circuit Breakers:

a) 11C29, LANDING GEAR POSITION AIR/GND SYS 2 ALT

b) 11U23 or 11U24, POSITION AIR/GND SYS 2

NOTE: This circuit breaker can be in one of these two locations.

(w) Open these circuit breakers on the overhead circuit breaker panel, P11:

1) 11T14, LEFT ICE DET

2) 11T23, RIGHT ICE DET

(x) Make sure the ICE DET light comes on at the M10397 module on the P5 panel.

BOEING PROPRIETARY - Copyright (C) - Unpublished Work - See title page for details.

MECH	INSP

(y) Close these circuit breakers on the overhead circuit breaker panel, P11:

1) 11T14, LEFT ICE DET

2) 11T23, RIGHT ICE DET

(z) Open these circuit breakers on the P11 panel:

1) 11C30, POSITION AIR/GND SYS 1

2) 11U15, AIR/GND SYS 1

(aa) Move the ICE DET TEST switch to L DET position and hold for 20 seconds.

(ab) Make sure the ICING light on the P5 panel stays off.

(ac) Release the ICE DET TEST switch.

(ad) Close these circuit breakers on the P11 panel:

1) 11C30, POSITION AIR/GND SYS 1

2) 11U15, AIR/GND SYS 1

(ae) Move the ICE DET TEST switch to the R DET position and hold it there for 20 seconds.

(af) Make sure the ICING light on the P5 panel stays off.

(ag) Release the ICE DET TEST switch.

(ah) Close this (these) circuit breaker(s) on the P11 panel:

1) AIRPLANES WITHOUT THE "LANDING GEAR POSITION AIR/GND SYS 2 ALT" CIRCUIT BREAKER INSTALLED AT PANEL GRID LOCATION 11C29;
11U23 or 11U24, POSITION AIR/GND SYS 2

NOTE: This circuit breaker can be in one of these two locations.

BOEING PROPRIETARY - Copyright (C) - Unpublished Work - See title page for details.

MECH	INSP

2) AIRPLANES WITH THE "LANDING GEAR POSITION AIR/GND SYS 2 ALT" CIRCUIT BREAKER INSTALLED AT PANEL GRID LOCATION 11C29;
Circuit Breakers:

a) 11C29, LANDING GEAR POSITION AIR/GND SYS 2 ALT

b) 11U23 or 11U24, POSITION AIR/GND SYS 2

NOTE: This circuit breaker can be in one of these two locations.

WARNING: DO NOT TOUCH THE ICE DETECTOR PROBE AFTER YOU SUPPLY ELECTRICAL POWER. ELECTRICAL POWER CAN CAUSE THE PROBE HEATERS TO OPERATE. A HOT ICE DETECTOR PROBE CAN BADLY BURN YOU.

(ai) Make sure these circuit breakers on the P11 panel are closed:

1) 11A16, L ENGINE ANTI-ICE

2) 11A31, WING ANTI-ICE

3) 11T14, LEFT ICE DET

4) 11T23, RIGHT ICE DET

5) 11T19, R ENGINE ANTI-ICE

(aj) Open these circuit breakers on the P11 panel and attach DO-NOT-CLOSE tags:

1) 11C30, POSITION AIR/GND SYS 1

2) 11U15, AIR/GND SYS 1

3) AIRPLANES WITHOUT THE "LANDING GEAR POSITION AIR/GND SYS 2 ALT" CIRCUIT BREAKER INSTALLED AT PANEL GRID LOCATION 11C29;
11U23 or 11U24, POSITION AIR/GND SYS 2

NOTE: This circuit breaker can be in one of these two locations.

BOEING PROPRIETARY - Copyright (C) - Unpublished Work - See title page for details.

4) AIRPLANES WITH THE "LANDING GEAR POSITION AIR/GND SYS 2 ALT" CIRCUIT BREAKER INSTALLED AT PANEL GRID LOCATION 11C29;
Circuit Breakers:

a) 11C29, LANDING GEAR POSITION AIR/GND SYS 2 ALT

b) 11U23 or 11U24, POSITION AIR/GND SYS 2

NOTE: This circuit breaker can be in one of these two locations.

(ak) Put the L-WING-R switch and the L-ENGINE-R ANTI-ICE switches on the P5 panel in the AUTO position.

(al) Make sure these messages do not show on the EICAS display:

MESSAGE	LEVEL	TYPE
ICING ENGINE	B	Caution
ICING WING	C	Advisory
R ENG ANTI-ICE	C	Advisory
L ENG ANTI-ICE	C	Advisory
R WING ANTI-ICE	C	Advisory
L WING ANTI-ICE	C	Advisory
L WING TAI VALVE	M	Maintenance
R WING TAI VALVE	M	Maintenance

(am) Make sure these messages show on the EICAS display:

MESSAGE	LEVEL	TYPE
ICE DETECTORS	C	Advisory
L ICE DETECTOR	S,M	Status, Maintenance
R ICE DETECTOR	S,M	Status, Maintenance

BOEING PROPRIETARY - Copyright (C) - Unpublished Work - See title page for details.

MECH	INSP

(an) Make sure these lights on the P5 panel do not come on:

1) ICING

2) VALVE (wing)

3) VALVE (engine)

(ao) Operate the left ice detector probe heater by one of these methods:

NOTE: Use a soft wet rag or ice to decrease the temperature of the ice detector while this test is done. Make the ice detector probe strut wet with the rag or put the ice on the probe strut.

1) Coat the ice detector probe with water and apply refrigerant until the ice layer is at least 0.02 inch (0.51mm) thick.

NOTE: This is the recommended procedure.

WARNING: THE ICE DETECTOR HEATS VERY QUICKLY AND GETS VERY HOT DURING OPERATION. DO NOT TOUCH THE ICE DETECTOR PROBE WITH YOUR HANDS. A HOT ICE DETECTOR PROBE CAN BADLY BURN YOU.

2) Put a leather glove on one hand.

NOTE: This is an optional procedure.

a) With the hand that has the glove on, lightly apply pressure to the ice detector probe with your thumb and index finger and release your fingers.

b) Hold your other hand near the ice detector probe to feel if the ice detector probe gets warm.

c) Let the ice detector probe temperature decrease for 10 to 15 seconds.

(ap) Operate the ice detector probe again.

BOEING PROPRIETARY - Copyright (C) - Unpublished Work - See title page for details.

MECH	INSP

(aq) Make sure this message shows on the EICAS display after 5 seconds:

1) ICING ENGINE

(ar) Make sure these lights on the P5 panel come on:

1) ICING

2) VALVE (engine)

3) Let the ice detector probe temperature decrease for 10 to 15 seconds.

(as) Operate the ice detector probe a total of 10 times. Let the ice detector probe temperature decrease for 10 to 15 seconds between each operation.

NOTE: Use a soft wet rag or ice to decrease the temperature of the ice detector while this test is done. Make the ice detector probe strut wet with the rag or put the ice on the probe strut.

(at) Make sure these messages show on the EICAS display:

1) ICING ENGINE

2) ICING WING

3) L WING ANTI-ICE

4) R WING ANTI-ICE

(au) Make sure these lights on the P5 panel come on:

1) ICING

2) VALVE (wing)

3) VALVE (engine)

(av) Make sure these messages on the EICAS display go off in less than 170 to 190 seconds from the last ice and deice cycle:

1) ICING ENGINE

BOEING PROPRIETARY - Copyright (C) - Unpublished Work - See title page for details.

MECH	INSP

2) ICING WING

3) R WING ANTI-ICE

4) L WING ANTI-ICE

(aw) Make sure these lights on the P5 panel do not come on:

1) ICING

2) VALVE (wing)

3) VALVE (engine)

(ax) Operate the right ice detector probe heater by one of these methods:

NOTE: Use a soft wet rag or ice to decrease the temperature of the ice detector while this test is done. Make the ice detector probe strut wet with the rag or put the ice on the probe strut.

1) Coat the ice detector probe with water and apply refrigerant until the ice layer is at least 0.02 inch (0.51mm) thick.

NOTE: This is the recommended procedure.

WARNING: THE ICE DETECTOR HEATS VERY QUICKLY AND GETS VERY HOT DURING OPERATION. DO NOT TOUCH THE ICE DETECTOR PROBE WITH YOUR HANDS. THE ICE DETECTOR PROBE CAN BADLY BURN YOU.

2) Put a leather glove on one hand.

NOTE: This is an optional procedure.

a) With the hand that has the glove on, lightly apply pressure to the ice detector probe with your thumb and index finger and release your fingers.

BOEING PROPRIETARY - Copyright (C) - Unpublished Work - See title page for details.

b) Hold your other hand near the ice detector probe to feel if the ice detector probe gets warm.

c) Let the ice detector probe temperature decrease for 10 to 15 seconds.

(ay) Operate the ice detector probe again.

(az) Make sure this message shows on the EICAS display after 5 seconds:

1) ICING ENGINE

(ba) Make sure these lights on the P5 panel come on:

1) ICING

2) VALVE (engine)

3) Let the ice detector probe temperature decrease for 10 to 15 seconds.

(bb) Operate the ice detector probe a total of 10 times. Let the ice detector probe temperature decrease for 10 to 15 seconds between each operation.

NOTE: Use a soft wet rag or ice to decrease the temperature of the ice detector while this test is done. Make the ice detector probe strut wet with the rag or put the ice on the probe strut.

(bc) Make sure these messages show on the EICAS display:

1) ICING ENGINE

2) ICING WING

3) L WING ANTI-ICE

4) R WING ANTI-ICE

(bd) Make sure these lights on the P5 panel come on:

1) ICING

2) VALVE (wing)

BOEING PROPRIETARY - Copyright (C) - Unpublished Work - See title page for details.

MECH	INSP

3) VALVE (engine)

(be) Make sure these messages on the EICAS display go off in less than 170 to 190 seconds from the last ice and deice cycle:

1) ICING ENGINE

2) ICING WING

3) R WING ANTI-ICE

4) L WING ANTI-ICE

(bf) Make sure these lights on the P5 panel do not come on:

1) ICING

2) VALVE (wing)

3) VALVE (engine)

(bg) Remove the DO-NOT-CLOSE tags and close these circuit breakers on the P11 panel:

1) AIRPLANES WITHOUT THE "LANDING GEAR POSITION AIR/GND SYS 2 ALT" CIRCUIT BREAKER INSTALLED AT PANEL GRID LOCATION 11C29;
11U23 or 11U24, POSITION AIR/GND SYS 2

NOTE: This circuit breaker can be in one of these two locations.

2) AIRPLANES WITH THE "LANDING GEAR POSITION AIR/GND SYS 2 ALT" CIRCUIT BREAKER INSTALLED AT PANEL GRID LOCATION 11C29;
Circuit Breakers:

a) 11C29, LANDING GEAR POSITION AIR/GND SYS 2 ALT

b) 11U23 or 11U24, POSITION AIR/GND SYS 2

NOTE: This circuit breaker can be in one of these two locations.

3) 11C30, POSITION AIR/GND SYS 1

BOEING PROPRIETARY - Copyright (C) - Unpublished Work - See title page for details.

MECH	INSP

4) 11U15, LANDING GEAR - AIR/GND SYS 1

D. Put the Airplane Back to Its Usual Condition.

(1) Put the safety-sensitive systems back to their initial conditions (AMM 32-09-02/201).

(2) Remove electrical power if it is not required (AMM 24-22-00/201).

BOEING PROPRIETARY - Copyright (C) - Unpublished Work - See title page for details.