SKILL	WORK AREA	RELATED TASK	INTERVAL	PHASE	MPD REV	TASK CARD REVISION
AIRPL	LAVATORIES				011	AUG 22/06

TASK	TITLE	STRUCTURAL ILLUSTRATION REFERENCE	APPLICABILITY AIRPLANE	APPLICABILITY ENGINE
REPLACE	TOILET ASSEMBLY		PASS	ALL

ZONES	ACCESS PANELS
200	

MECH | INSP | MPD ITEM NUMBER

REPLACE THE TOILET ASSEMBLY. 38-32-01-4A

THIS CARD IS NOT A SCHEDULED MAINTENANCE TASK. IT IS A COMPONENT CHANGE CARD AND IT IS PROVIDED FOR OPERATOR CONVENIENCE DURING UNSCHEDULED MAINTENANCE ACTIVITIES. SEE APPENDIX A OF THE 767 MAINTENANCE PLANNING DATA (MPD) DOCUMENT,D622T001, FOR A DESCRIPTION OF THE COMPONENT CHANGE CARDS.

1. Toilet Removal

A. Equipment

(1) Plug for the Vacuum Waste System - A38007-1

B. Consumable Materials

(1) D00046 Grease - DC4

C. References

(1) AMM 20-41-01/201, Electrostatic Discharge Sensitive Devices

(2) AMM 38-32-00/201, Standard Procedures with Lav Waste and Equipment

(3) AMM 38-32-00/201, Deactivate Vacuum Blower and Lav Flush System

D. Prepare for the Removal (Fig. 401)

(1) Deactivate the vacuum blower and lav flush system (AMM 38-32-00/201).

(2) Do the standard procedures for working with the toilet waste and equipment (AMM 38-32-00/201).

(3) Do the steps that follow to remove the toilet shroud:

BOEING PROPRIETARY - Copyright (C) - Unpublished Work - See title page for details.

MECH | INSP

(a) Open the toilet shroud latches at the bottom of the toilet shroud (turn the latches away from the toilet to open them).

(b) Pull out the bottom edge of the toilet shroud.

(c) Move the toilet shroud down until the top edge is disengaged from the trim strip on the lavatory wall.

(4) Close the manual shutoff valve for the rinse water.

E. Remove the Toilet Assembly (Fig. 401)

(1) Disconnect the electrical connector for the power source of the toilet.

CAUTION: DO NOT REMOVE THE TOILET BEFORE YOU DO THE PROCEDURE FOR DEVICES THAT ARE SENSITIVE TO ELECTROSTATIC DISCHARGE (AMM 20-41-01/201). ELECTROSTATIC DISCHARGE CAN CAUSE DAMAGE TO THE PC BOARD OF THE ELECTRONIC FLUSH CONTROL.

(2) Do the procedure for devices that are sensitive to electrostatic discharge (AMM 20-41-01/201).

(3) Hold the fitting, at the bottom of the rinse valve, with a wrench to make sure it does not turn, and do this step:

(a) Disconnect the supply line for the rinse water at the rinse valve on the toilet.

(4) Drain the water that is in the supply line into a container.

(5) Release and remove the clamp that attaches the elbow or the straight connection (on the discharge valve) to the vacuum waste tube.

(6) Remove the toilet mounting bolts.

(7) Remove the nut and washer to disconnect the bonding jumper from the toilet and then attach the nut and washer.

(8) Remove the toilet assembly.

BOEING PROPRIETARY - Copyright (C) - Unpublished Work - See title page for details.

MECH | INSP

(9) Remove the elbow or the straight connection from the discharge valve.

NOTE: This step is not necessary if the toilet assembly that you will install has the correct elbow or straight connection.

(10) If the vacuum waste system will be operated while the toilet is removed, then do these steps (to install a plug in the vacuum waste tube) (Fig. 405):

(a) Put grease on the o-ring on the plug.

(b) Put the plug in the vacuum waste tube.

(c) Attach the plug to the vacuum waste tube with the clamp.

2. Toilet Installation

A. Consumable Materials

(1) G00022 Compound, Water purifying Chlorine Dioxide (stabilized 2% solution) - Purogene or Oxine

(2) B00637 Acid, Citric (crystals or powder), Commercially Available - A-A-59147

(3) D00046 Grease - DC4

B. References

(1) AMM 12-14-01/301, Potable Water System

(2) AMM 20-41-01/201, Electrostatic Discharge Sensitive Devices

(3) AMM 24-22-00/201, Electrical Power - Control

(4) AMM 38-10-00/201, Potable Water System

(5) AMM 38-32-00/201, Standard Procedures with Lav Waste and Equipment

(6) AMM 38-32-00/201, Activate Vacuum Blower and Lav Flush System

C. Install the Toilet Assembly (Fig. 401)

BOEING PROPRIETARY - Copyright (C) - Unpublished Work - See title page for details.

MECH	INSP

(1) Do the standard procedures for working with the toilet waste and equipment (AMM 38-32-00/201).

CAUTION: DO NOT INSTALL THE TOILET BEFORE YOU DO THE PROCEDURE FOR DEVICES THAT ARE SENSITIVE TO ELECTROSTATIC DISCHARGE (AMM 20-41-01/201). ELECTROSTATIC DISCHARGE CAN CAUSE DAMAGE TO THE PC BOARD OF THE ELECTRONIC FLUSH CONTROL.

(2) Do the procedure for devices that are sensitive to electrostatic discharge (AMM 20-41-01/201).

(3) If a plug is installed in the vacuum waste tube, then do these steps to remove the plug (Fig. 405):

(a) Release and remove the clamp that attaches the plug to the vacuum waste tube.

(b) Pull the plug from the vacuum waste tube.

(4) TOILETS WITHOUT AN ELBOW OR STRAIGHT CONNECTION ON DISCHARGE VALVE; Install the elbow or straight connection (from the old toilet) to the discharge valve of the new toilet. Use a new o-ring with grease on it and new screws.

NOTE: This step is not necessary if the toilet you will install has the correct elbow or straight connection.

(5) Put grease on a new o-ring.

(6) Put the new o-ring on the elbow that is attached to the discharge valve.

(7) Put the toilet in its position and install the mounting bolts. Do not tighten the bolts.

(8) Attach the elbow or the straight connection (of the toilet) to the vacuum waste tube with the clamp.

NOTE: Turn the clamp (before you latch it) to put it in a position that will give the easiest access to the latch.

(9) Tighten the mounting bolts for the toilet.

BOEING PROPRIETARY - Copyright (C) - Unpublished Work - See title page for details.

MECH | INSP

(10) Remove the nut and washer to connect the bonding jumper to the toilet.

(a) Install the nut and washer to connect the bonding jumper.

(11) Mix 0.65 fluid ounces (20 ml) chlorine dioxide and 0.07 ounces (1.9 grams) of citric acid in one gallon (4 liters) of water to make a disinfectant.

(12) Clean the connections on the supply line for the rinse water with the disinfectant.

(13) Put about one cup (8 fluid ounces) of the disinfectant in the supply line.

(14) Hold the fitting, at the bottom of the rinse valve, with a wrench to make sure it does not turn, and do this step:

(a) Connect the supply line for the rinse water to the rinse valve and install a lockwire.

(15) Connect the electrical connector for the power supply for the toilet.

D. Put the Airplane Back to Its Usual Condition (Fig. 401)

(1) Open the manual shutoff valve for the rinse water.

(2) Activate the vacuum blower and lavatory flush system (AMM 38-32-00/201).

(3) Supply electrical power (AMM 24-22-00/201).

(4) If the potable water tanks are empty, then fill the potable water tanks (AMM 12-14-01/301).

(5) Pressurize the potable water system (AMM 38-10-00/201).

(6) Flush the toilet a minimum of two times to make sure it operates correctly.

(7) Do these steps to install the toilet shroud:

(a) Engage the top edge of the toilet shroud with the trim strip of the lavatory wall.

(b) Push the bottom edge of the toilet shroud in.

BOEING PROPRIETARY - Copyright (C) - Unpublished Work - See title page for details.

MECH	INSP

(c) Turn the toilet shroud latches to close the toilet shroud.

(8) Remove electrical power if it is not necessary (AMM 24-22-00/201).

BOEING PROPRIETARY - Copyright (C) - Unpublished Work - See title page for details.

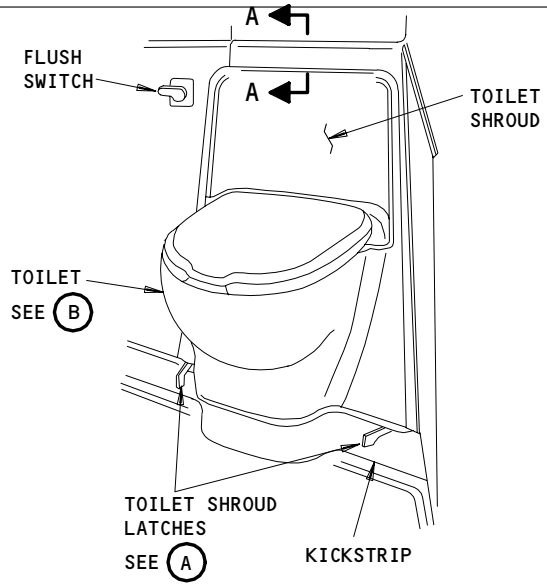

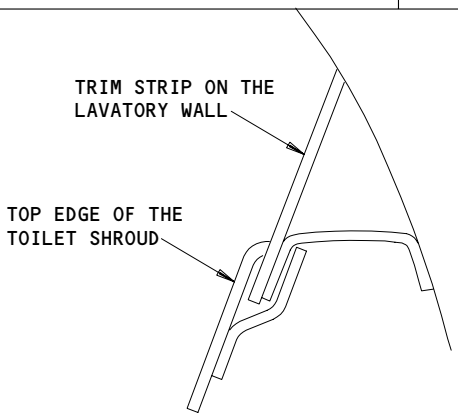

A-A

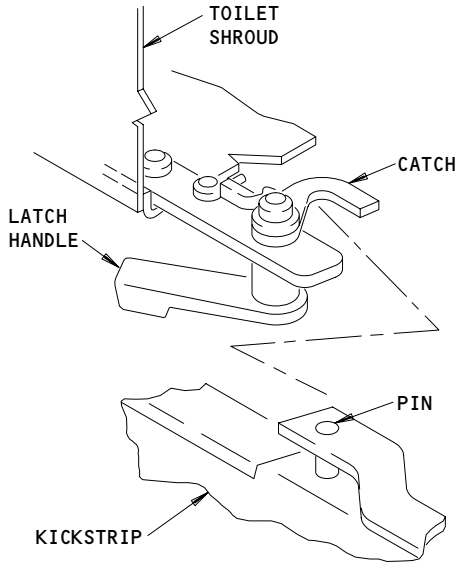

TOILET SHROUD LATCH

A

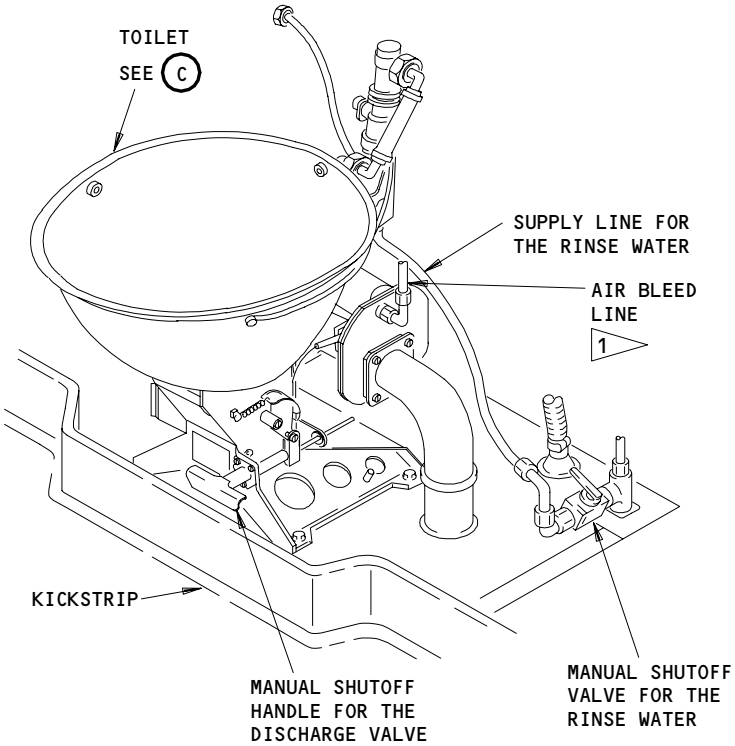

TOILET

B

1 NOT ON ALL TOILETS

Toilet Assembly Installation
Figure 401 (Sheet 1)

BOEING PROPRIETARY - Copyright (C) - Unpublished Work - See title page for details.

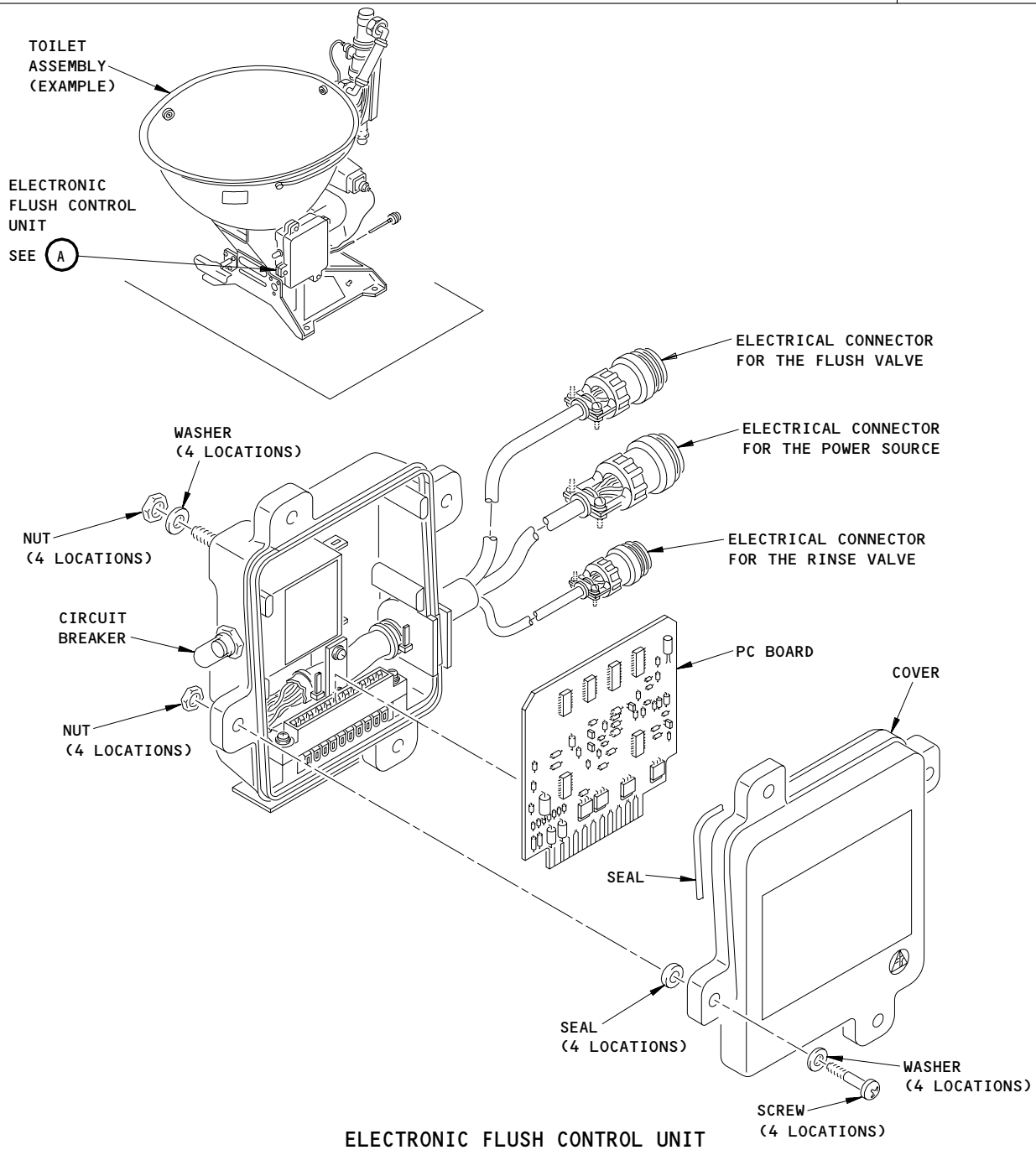

ELECTRONIC FLUSH CONTROL UNIT

A 1

1 AIRPLANES WITH A CIRCUIT BREAKER ON THE FLUSH CONTROL UNIT

2 AIRPLANES WITHOUT A CIRCUIT BREAKER ON THE FLUSH CONTROL UNIT

Electronic Flush Control Installation
Figure 402 (Sheet 1)

BOEING PROPRIETARY - Copyright (C) - Unpublished Work - See title page for details.

STATION		BOEING CARD NO.
TAIL NO.	SAS BOEING 767 TASK CARD	38-001-01
DATE		AIRLINE CARD NO.

SKILL	WORK AREA	RELATED TASK	INTERVAL	PHASE	MPD REV	TASK CARD REVISION
AIRPL	FUSELAGE		NOTE	99XXX	011	DEC 22/06

TASK	TITLE	STRUCTURAL ILLUSTRATION REFERENCE	APPLICABILITY AIRPLANE	APPLICABILITY ENGINE
DISINFECT	POTABLE WATER SYSTEM		PASS	ALL

ZONES	ACCESS PANELS
155 200	155AL

MECH	INSP	MPD ITEM NUMBER

DISINFECT POTABLE WATER SYSTEM. 38-10-00-2A

INTERVAL NOTE: AS REQUIRED PER APPLICABLE REGULATORY AUTHORITY.

1. <u>Disinfect the Potable Water System</u>

A. References

(1) AMM 12-14-01/301, Potable Water System

(2) AMM 38-10-00/201, Depressurize/Pressurize Potable Water System

B. Consumable Materials

(1) G00022 Compound, Water purifying Chlorine Dioxide (stabilized 2% solution) - Purogene or Oxine

(2) B00637 Acid, Citric (crystals or powder), Commercially Available - A-A-59147

C. Prepare to Disinfect the Potable Water System.

<u>WARNING</u>: DRAIN, OR USE THE POTABLE WATER SYSTEM A MINIMUM OF ONE TIME EACH THREE DAYS. IF YOU DO NOT DRAIN, OR USE THE WATER SYSTEM FREQUENTLY, BACTERIA CAN GROW IN THE WATER. IF YOU DRINK WATER WITH BACTERIA IN IT, ILLNESS CAN OCCUR.

(1) Drain the potable water system (AMM 12-14-01/301).

BOEING PROPRIETARY - Copyright (C) - Unpublished Work - See title page for details.

(2) AIRPLANES WITH WATER FILTERS;
Remove and discard the water filter cartridges (as installed) from the water tube in the lavatories, the galleys, and the drinking fountain.

(a) Install the empty filter housing after you remove the filter cartridge.

(3) In the galleys with a coffeemaker or water boiler, they may be disconnected, if desired.

NOTE: If coffeemakers and boilers are disconnected, and do not have individual shutoff valves, the lines must be capped. If the lines are capped, disinfectant may not enter the feeder line.

D. Disinfect the Potable Water System.

(1) Fill the potable water system approximately half full with water (AMM 12-14-01/301). Use the water quantity gauge on the service panel.

NOTE: The filter cartridge should not be installed in the water service cart.

(2) Make the disinfectant that follows:

NOTE: The disinfectant mixtures will provide the full system with a solution of chlorine dioxide at 100 parts per million.

(a) Recommended disinfectant:

1) Chlorine dioxide (stabilized 2%) and citric acid (crystals or powder)

WARNING: DO NOT BREATHE THE CHLORINE DIOXIDE GAS. WHEN THE TWO CHEMICALS ARE MIXED, CHLORINE DIOXIDE GAS IS PRODUCED WHICH CAN CAUSE INJURY TO PERSONS IF THEY BREATHE THE GAS.

BOEING PROPRIETARY - Copyright (C) - Unpublished Work - See title page for details.

MECH	INSP

a) AIRPLANES WITH RIGHT MAIN AND AUXILLIARY TANKS; (164 GAL CAPACITY);
Mix the following amounts of chlorine dioxide with citric acid in a clean, closed plastic container:
105 fluid ounces (3.10 liters) chlorine dioxide,
13.1 fluid ounces (0.39 liter) citric acid (crystals or powder) or
21.0 fluid ounces (0.62 liter) citric acid 50% (liquid).

b) Use a clean instrument to mix the solution fully.

c) Stop for 5 minutes (activation period).

d) Add 5 gallons of water to the solution.

(3) Add the disinfectant solution to the potable water system through the water fill connection at the potable water service panel.

(4) Add water to the potable water system until full (AMM 12-14-01/301).

(5) Pressurize the potable water system (AMM 38-10-00/201).

(6) Open the forward-most lavatory and galley water faucets and let run for 8 minutes.

(7) Open each of the other lavatory faucets and galley faucets in the potable water system.

(a) Let the water flow until the disinfectant appears at the faucets.

NOTE: The disinfectant may be noticeable by its slight yellow color.

(8) If installed, open each of the coffemaker and water boiler valves in the galleys.

(a) Let the water flow until the disinfectant appears.

NOTE: The disinfectant may be noticeable by its slight yellow color.

(9) Flush each toilet at least twice with a 15 second delay between flushes or until clear chlorinated water appears.

BOEING PROPRIETARY - Copyright (C) - Unpublished Work - See title page for details.

MECH	INSP

(10) Fill the remainder of the potable water system with water until it is full (AMM 12-14-01/301).

(11) Let the disinfectant stay in the potable water system for one hour.

(12) Release the pressure from the potable water system (AMM 38-10-00/201).

(13) Drain the potable water system (AMM 12-14-01/301).

(a) Momentarily, open each of the lavatory and galley faucets and coffeemakers and water boiler valves to drain water in the lavatory and galley supply lines.

E. Flush the Potable Water System with Clean Water.

(1) Fill the potable water system with clean water (AMM 12-14-01/301).

(2) Pressurize the potable water system (AMM 38-10-00/201).

(3) Open each of the lavatory and galley faucets, and coffeemaker and water boiler valves until water flows through each for a minimum of one (1) minute.

(4) Flush each toilet at least twice with 15 second delay between flushes.

(5) If the taste, odor, or color of the water is bad, do these tasks:

(a) Drain the potable water system.

(b) Do the Flush the Potable Water System with Clean Water, procedure again.

F. Put the Airplane Back to its Usual Condition

(1) Release pressure from the potable water system (AMM 38-10-00/201).

(2) In the galleys that have a coffeemaker or water boiler, install the coffemaker or water boiler, if previously removed.

(3) AIRPLANES WITH WATER FILTERS;
Install a new water filter cartridge(s) (as installed) in the cold water tubes for the lavatory, the galley, and the drinking fountain.

(4) Pressurize the potable water system.

BOEING PROPRIETARY - Copyright (C) - Unpublished Work - See title page for details.

MECH	INSP

(5) Open each of the lavatory faucets until water flows for 15 seconds.

(6) AIRPLANES WITH WATER FILTERS;
Make sure there is no leakage at the filters.

(7) Fill the potable water system with clean water (AMM 12-14-01/301).

BOEING PROPRIETARY - Copyright (C) - Unpublished Work - See title page for details.

STATION		BOEING CARD NO.
TAIL NO.	SAS BOEING 767 TASK CARD	38-002-C1
DATE		AIRLINE CARD NO.

SKILL	WORK AREA	RELATED TASK	INTERVAL	PHASE	MPD REV	TASK CARD REVISION
AIRPL	FUSELAGE		1C	11212	011	AUG 22/06

TASK	TITLE	STRUCTURAL ILLUSTRATION REFERENCE	APPLICABILITY AIRPLANE	APPLICABILITY ENGINE
REPLACE	POTABLE WATER SYSTEM AIR FILTERS		PASS	ALL

ZONES	ACCESS PANELS
166	1651 811 NOTE

MECH	INSP	MPD ITEM NUMBER

REPLACE THE POTABLE WATER TANK COMPRESSOR AIR INLET FILTER CARTRIDGE. 38-15-02-4A 38-15-02-4A 38-15-02-4B

REPLACE THE POTABLE WATER ENGINE BLEED AIR AND AIR COMPRESSOR OUTLET PRESSURE (IF INSTALLED) INLINE FILTER ELEMENTS. 38-15-02-4B

ACCESS NOTE: SPECIAL ACCESS 1651 REQUIRES REMOVAL OF THE BULK CARGO COMPT AFT WALL PANELS.

1. General

   A. This procedure gives the instructions to remove and install the air filters of the potable water system.

2. Air Filter Element - Removal (Fig. 401)

   A. References

      (1) AMM 25-52-01/401, Containerized Cargo Compartment Sidewall Lining

      (2) AMM 38-10-00/201, Potable Water System

      (3) AMM 52-36-00/001, Bulk Cargo Door

   B. Prepare for Removal

      (1) Open the bulk cargo door (AMM 52-36-00/001).

      (2) Remove the aft bulkhead lining of the bulk cargo compartment (AMM 25-52-01/401).

   C. Remove the Filter Element from the Replaceable Element Air Filter (for the Engine Bleed Air or the Air Compressor Air)

      (1) Release the pressure from the potable-water system (AMM 38-10-00).

BOEING PROPRIETARY - Copyright (C) - Unpublished Work - See title page for details.

MECH | INSP

(2) Turn the filter case (5) to remove it from the air filter head (1).

(3) Remove the filter element (4).

(4) Remove the O-ring retainer (12) and the O-ring (13) from the air filter head (1).

D. Remove the Filter Cartridge from the External Inlet Filter

(1) Pull on the filter cartridge (9).

E. Remove the Cleanable Air Filter for Cleaning (for the Engine Bleed Air)

(1) Release the pressure from the potable water system (AMM 38-10-00/201).

(2) Loosen the air outlet tube (3) and the air inlet tube (5).

(3) Remove the filter (1) and O-ring (2).

(4) Put a cap on the air outlet line (3) and the air inlet line (5) to keep contamination out.

(5) Remove the union (4) and O-ring (2) from the filter (1).

F. Remove the Filter Element from the Built-in Inlet Filter

(1) Remove the snap ring (10), perforated disc (8), and the O-ring (15).

(2) Remove the filter element (9).

G. Remove the Attached Inlet Filter

(1) Remove the attached inlet filter (7).

(2) Place a cap in the air compressor inlet port to keep contamination out.

(3) Discard the filter (7) and its O-ring (6).

3. Air Filter Element - Installation (Fig. 401)

A. References

(1) AMM 25-52-01/401, Containerized Cargo Compartment Sidewall Lining

(2) AMM 36-00-00/201, Pneumatic Power

BOEING PROPRIETARY - Copyright (C) - Unpublished Work - See title page for details.

MECH	INSP

(3) AMM 38-10-00/201, Potable Water System

(4) AMM 52-36-00/001, Bulk Cargo Door

B. Install the Filter Element from the Replaceable Element Air Filter (for the Engine Bleed Air or the Air Compressor Air)

(1) Clean the filter case (5).

(2) Install the O-ring retainer (12) and a new O-ring (13) in the air filter head (1).

(3) Put the filter element (4) in the filter case (5).

(4) Install the filter case (5) on the air filter head (1). Torque the filter case (5) to 150 +/- 5 lb-in.

(5) Install a lockwire.

(6) If installing the bleed air filter,
Supply pneumatic power (AMM 36-00-00/201).

(7) Pressurize the potable water system (AMM 38-10-00/201).

(8) Make sure the air filter (14) does not have a leak.

C. Install the Filter Cartridge in the External Inlet Filter

(1) Clean the inlet air filter assembly (8).

(2) Push the filter cartridge (9) into the inlet air filter (8) until the filter cartridge touches the shoulder of the inlet air filter.

D. Install the Cleanable Air Filter (for the Engine Bleed Air)

(1) Clean the filter (1) as follows:

(a) Soak the filter element in aliphantic naptha or Methyl Ethyl Ketone (MEK).

(b) Reverse flow blow dry with low air pressure.

(c) Make sure the filter is in servicable condition.

(2) Install a new O-ring (2) and the union (4) in the filter (1).

BOEING PROPRIETARY - Copyright (C) - Unpublished Work - See title page for details.

MECH	INSP

(3) Remove the caps from the air outlet line (3) and the air inlet line (5).

(4) Install the O-ring (2) on the filter (1).

(5) Install the air outlet tube (3) and the air inlet tube (5) on the filter (1).

(6) Supply pneumatic power (AMM 36-00-00/201).

(7) Pressurize the potable water system (AMM 38-10-00/201).

(8) Make sure the filter (1) does not have a leak.

E. Install the Filter Element in the Built-in Inlet Filter

(1) Clean the inlet air filter assembly (7) as follows:

(a) Soak the filter element in aliphantic naptha or Methyl Ethyl Ketone (MEK).

(b) Reverse flow blow dry with low air pressure.

(c) Make sure the filter is in servicable condition.

(2) Push the filter element (9) into the inlet air filter (7) until the filter element touches the shoulder of the inlet air filter.

(3) Install a new O-ring (15), the perforated disc (8), and the snap ring (10) in the inlet filter assembly (7).

F. Install the Attached Inlet Filter

(1) Make sure the O-ring (6) is installed on the inlet filter (7).

(2) Remove the protective cap from the air compressor inlet port.

(3) Install the filter (7) with its O-ring (6) on the air compressor.

(4) Turn the filter a quarter turn past where the o-ring seats against the air compressor.

G. Put the Airplane Back to Its Usual Condition

BOEING PROPRIETARY - Copyright (C) - Unpublished Work - See title page for details.

MECH	INSP

WARNING: OBEY THE INSTRUCTIONS IN THE CARGO LINING INSTALLATION PROCEDURE. INCORRECT INSTALLATION OF THE CARGO LINING CAN LET THE FIRE EXTINGUISHING AGENT OR SMOKE OUT OF THE CARGO COMPARTMENT DURING A FIRE.

(1) Install the aft bulkhead lining in the bulk cargo compartment (AMM 25-52-01/401).

(2) Close the bulk cargo door (AMM 52-36-00/001).

BOEING PROPRIETARY - Copyright (C) - Unpublished Work - See title page for details.

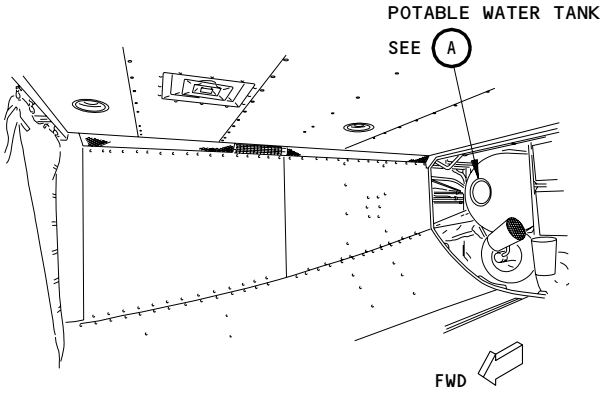

BULK CARGO COMPARTMENT

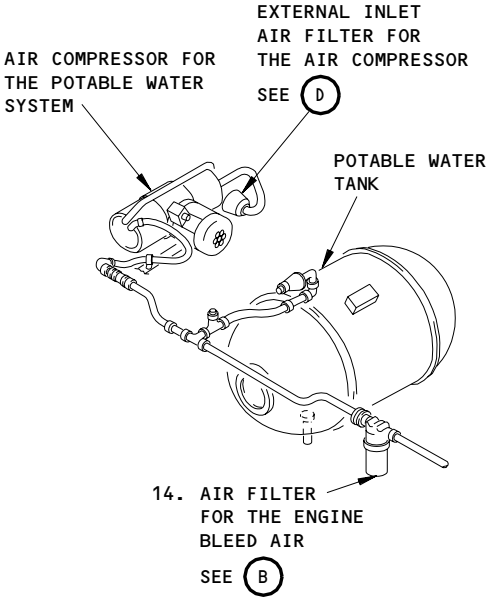

POTABLE WATER TANK

A 1

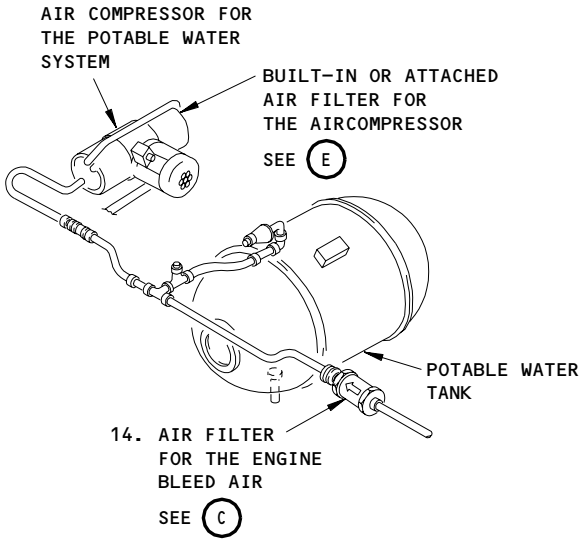

POTABLE WATER TANK

A 2

1 AIR COMPRESSOR WITH EXTERNAL INLET FILTER

2 AIR COMPRESSOR WITH BUILT-IN OR ATTACHED INLET FILTER

3 REMOVE THE FILTER CASE TO FIND THE FILTER ELEMENT

Air Filter Installation
Figure 401 (Sheet 1)

BOEING PROPRIETARY - Copyright (C) - Unpublished Work - See title page for details.

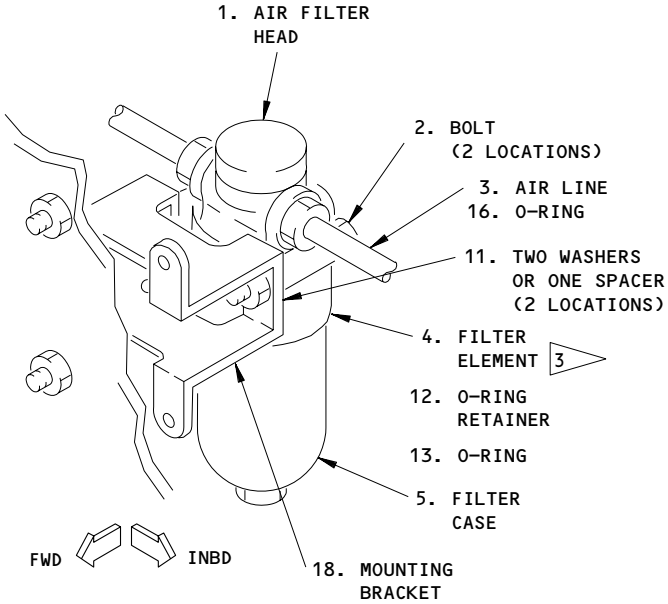

AIR FILTER FOR THE ENGINE BLEED AIR
(REPLACEABLE ELEMENT)

B

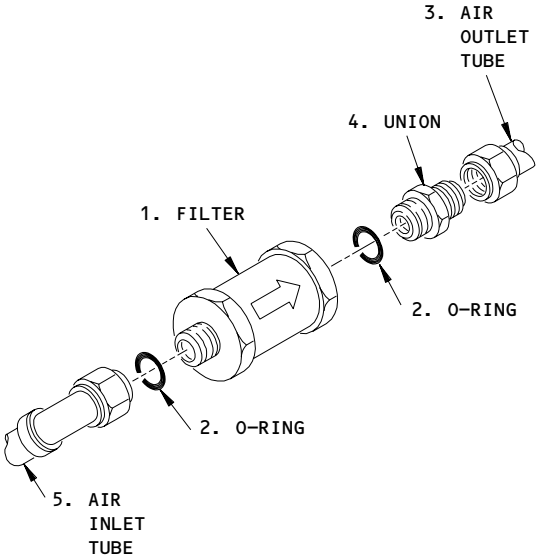

AIR FILTER FOR THE ENGINE BLEED AIR
(CLEANABLE ELEMENT)

C

Air Filter Installation
Figure 401 (Sheet 2)

BOEING PROPRIETARY - Copyright (C) - Unpublished Work - See title page for details.

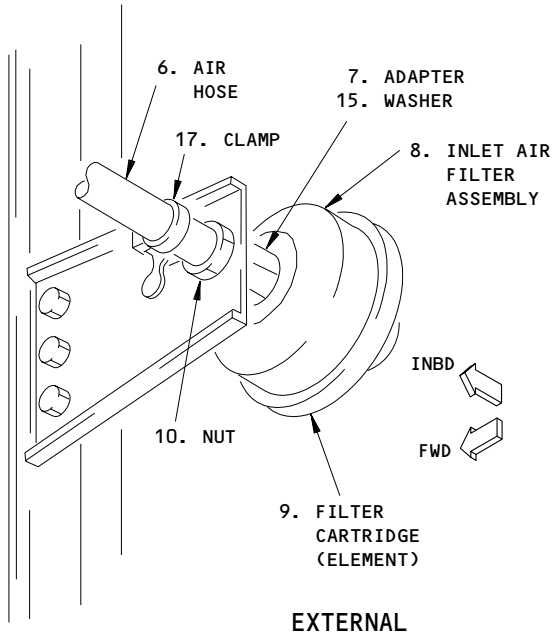

EXTERNAL
INLET AIR FILTER FOR THE AIR COMPRESSOR
(REPLACEABLE ELEMENT)
D

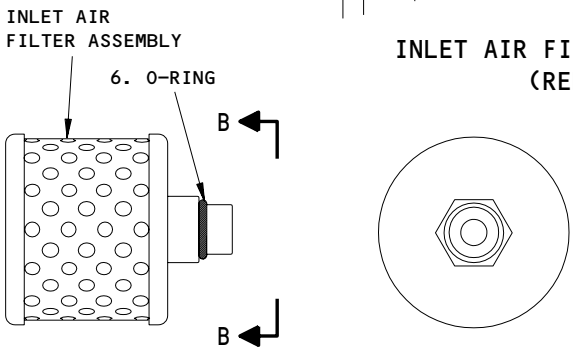

A-A

ATTACHED
INLET AIR FILTER FOR THE AIR COMPRESSOR
(REPLACEABLE)
E

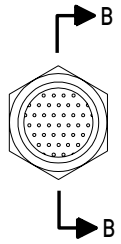

BUILT IN
INLET AIR FILTER FOR THE AIR COMPRESSOR
(CLEANABLE ELEMENT)
E

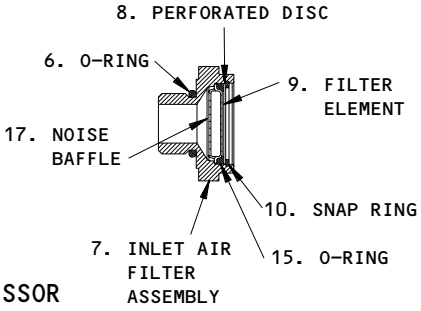

B-B

Air filter Installation
Figure 401 (Sheet 3)

BOEING PROPRIETARY - Copyright (C) - Unpublished Work - See title page for details.

STATION		BOEING CARD NO.
TAIL NO.	SAS BOEING 767 TASK CARD	38-005-01
DATE		AIRLINE CARD NO.

SKILL	WORK AREA	RELATED TASK	INTERVAL	PHASE	MPD REV	TASK CARD REVISION
AIRPL	FUSELAGE		1C	11212	011	APR 22/05

TASK	TITLE	STRUCTURAL ILLUSTRATION REFERENCE	APPLICABILITY AIRPLANE	APPLICABILITY ENGINE
OPERATIONAL	SENSOR CONTROL AND LOGIC MODULES		NOTE	ALL

ZONES	ACCESS PANELS
165 200	163AL 1651 811

MECH	INSP	MPD ITEM NUMBER
		38-33-00-5C

TEST THE VACUUM WASTE SENSOR CONTROL AND THE LOGIC MODULES AND VERIFY THE SHUTOFF CIRCUIT FUNCTION.

AIRPLANE NOTE: APPLICABLE TO PASSENGER AIRPLANES WITH KAISER LCM WHICH UTILIZE "OR" LOGIC POINT LEVEL SENSING SYSTEMS FOR THE WASTE TANKS. (LINE NUMBERS 001 THRU 298 WITHOUT SERVICE BULLETINS SB-767-38-0031, -0034, OR -0035, OR EQUIVALENT).

ACCESS NOTE: SPECIAL ACCESS 1651 REQUIRES REMOVAL OF THE BULK CARGO COMPT AFT WALL PANELS.

BOEING PROPRIETARY - Copyright (C) - Unpublished Work - See title page for details.

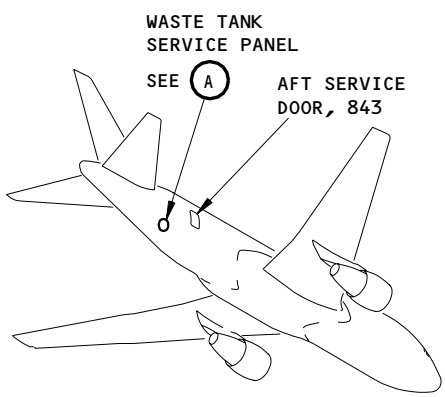

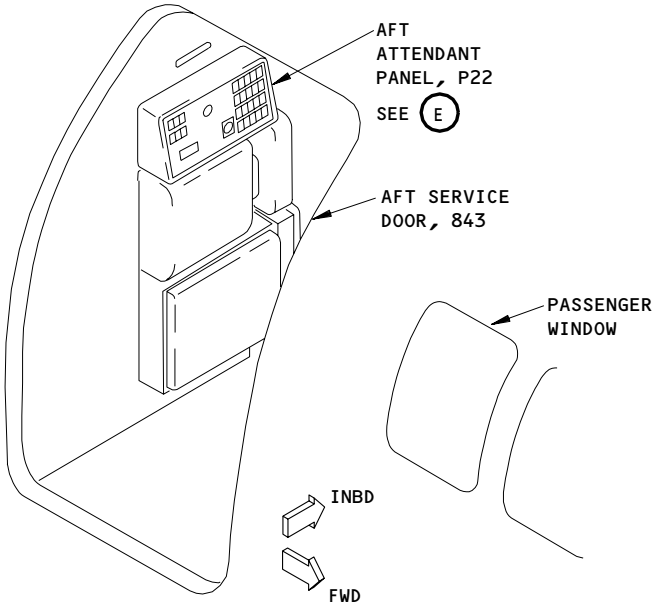

AFT ATTENDANT PANEL

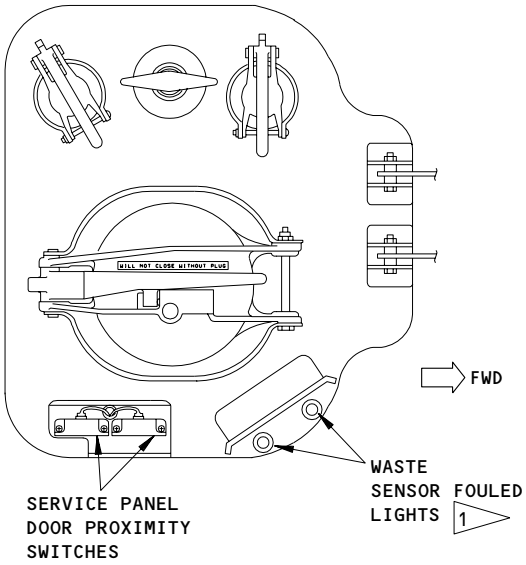

WASTE TANK SERVICE PANEL

A

1 NOT INSTALLED ON ALL AIRPLANES

Waste Tank Quantity Indication System Test
Figure 501 (Sheet 1)

BOEING PROPRIETARY - Copyright (C) - Unpublished Work - See title page for details.

SKILL	WORK AREA	RELATED TASK	INTERVAL	PHASE	MPD REV	TASK CARD REVISION
AIRPL	FUSELAGE		4A	10404	011	AUG 22/09

TASK	TITLE	STRUCTURAL ILLUSTRATION REFERENCE	APPLICABILITY AIRPLANE	APPLICABILITY ENGINE
OPERATIONAL	SENSOR CONTROL AND LOGIC MODULES		NOTE	ALL

ZONES	ACCESS PANELS
165 200	163AL 1651 811

MECH | INSP | MPD ITEM NUMBER

TEST THE VACUUM WASTE SENSOR CONTROL AND THE LOGIC MODULES AND VERIFY THE SHUTOFF CIRCUIT FUNCTION. 38-33-00-5B

AIRPLANE NOTE: APPLICABLE TO PASSENGER AIRPLANES WITH DREXELBROOK OR ROSEMOUNT LCM WHICH UTILIZE "AND" OR "MANUAL AND" LOGIC POINT LEVEL SENSING SYSTEMS FOR WASTE TANKS (LINE NUMBERS 001 THRU 298 INCORPORATING SB-767-38-0031, SB-767-38-0034 OR SB-767-38-0035. LINE NUMBERS 299 AND SUBSEQUENT WITH PRODUCTION INSTALLATION INCLUDING 299 THRU 342 THAT HAVE INCORPORATED SB-767-38-0037).

ACCESS NOTE: SPECIAL ACCESS 1651 REQUIRES REMOVAL OF THE BULK CARGO COMPT AFT WALL PANELS.

1. <u>The Level Sensor BITE Test of the Waste Quantity Indication System</u> (Fig. 501)

   A. References

      (1) AMM 24-22-00/201, Control (Supply Electric Power)

      (2) AMM 25-52-01/401, Containerized Cargo Compartment Sidewall Lining

      (3) AMM 29-11-00/201, Main (Left, Right and Center) Hydraulic Systems

      (4) AMM 32-00-20/201, Landing Gear Downlocks

      (5) AMM 52-36-00/001, Bulk Cargo Door

   B. Prepare for the Test

      (1) Supply electrical power (AMM 24-22-00/201).

BOEING PROPRIETARY - Copyright (C) - Unpublished Work - See title page for details.

(2) Open the bulk cargo door, 811 (AMM 52-36-00/001).

CAUTION: USE TOOLS CAREFULLY BECAUSE THE WASTE TANKS ARE A HONEYCOMB WITH A GRAPHITE COMPOSITE SKIN, WHICH IS EASILY DAMAGED. IF YOU HIT THE TANK WITH LOW ENERGY, THIS CAN CAUSE DAMAGE THAT YOU CANNOT SEE BEFORE A TANK FAILS. DO NOT HIT THE WASTE TANK, BECAUSE DAMAGE CAN OCCUR.

(3) To get access to the waste tanks, remove the aft bulkhead lining of the bulk cargo compartment (AMM 25-52-01/401).

(4) Get access to the aft attendant panel, P22, in the passenger cabin.

(5) Determine which LCM system you have by visual inspection and comparison with Fig. 501.

C. AIRPLANES WITH THE DREXELBROOK LCM USING "AND" OR "MANUAL AND" LOGIC; Level Sensor BITE Test

NOTE: The Drexelbrook LCM on some airplanes is configured for "AND" LOGIC, and is configured for "MANUAL AND" LOGIC on other airplanes. If the aft attendant panel has an active SNSR OFF FWD TANK (AFT TANK) switch, the LCM has "MANUAL AND" LOGIC. If the aft attendant panel does not have an active SNSR OFF FWD TANK (AFT TANK) switch, the LCM has "AND" LOGIC.

BOEING PROPRIETARY - Copyright (C) - Unpublished Work - See title page for details.

MECH	INSP

(1) From the Logic Control Module (LCM), do these steps:

NOTE: There is one LCM for each waste tank. Do the test separately for the forward and the aft waste tank.

(a) Make sure the test switch on the LCM is in the OFF position.

1) Look at the indicator lights on the LCM and make sure the SENSOR 1, the SENSOR 2, and the TANK FULL indicator lights are OFF with the waste tank empty.

NOTE: Make sure the POWER indicator light is ON.

(b) Hold the test switch for the LCM in the TEST LAMPS position.

1) Make sure the SENSOR 1, the SENSOR 2, and the TANK FULL indicator lights come on and the POWER indicator light stays on.

(c) Hold the test switch in the TEST SENSOR position.

1) Make sure the SENSOR 1, the SENSOR 2, and the TANK FULL indicator lights come ON within 30 seconds.

(d) Put the test switch in the OFF position.

1) Make sure the SENSOR 1, the SENSOR 2, and the TANK FULL indicator lights go off and the POWER indicator light stays on.

(2) AIRPLANES WITH SENSOR FOULED LIGHTS AT THE WASTE SERVICE PANEL; From the waste service panel, 163AL, do these steps:

(a) Open the door for the waste tank service panel, 163AL, (AMM 52-49-00/001).

(b) Push the WASTE SENSOR(S) FOULED switch-light for the FWD TANK (AFT TANK) that is on the waste tank service panel.

1) Make sure the SENSOR FOULED light for the FWD TANK (AFT TANK) comes ON.

(3) From the aft attendant panel, P22, do these tasks:

BOEING PROPRIETARY - Copyright (C) - Unpublished Work - See title page for details.

MECH | INSP

(a) Push the SNSR FOUL switch-light for the FWD TANK (AFT TANK) that is on the attendant panel.

1) Make sure the SNSR FOUL light for the FWD TANK (AFT TANK) comes ON.

(b) Push and hold the LAV INOP switch-light for the FWD TANK (AFT TANK) on the aft attendant panel, P22, and do these steps:

NOTE: The aft attendant panel has a LAV INOP switch-light for each waste tank.

1) Make sure the LAV INOP light for the FWD TANK (AFT TANK) comes ON in less than 30 seconds.

2) Find the lavatories that are shown on the LAV INOP switch-light that is pushed. Operate the flush switch in each of these lavatories, one at a time.

a) Make sure the toilet in each lavatory does not flush and the vacuum blower does not operate.

3) Find the lavatories that are shown on the LAV INOP switch-light that is not pushed. Operate the flush switch in each of these lavatories, one at a time.

a) Make sure the toilet in each lavatory does flush and the vacuum blower does operate.

D. AIRPLANES WITH THE DREXELBROOK LCM USING "MANUAL AND" LOGIC; "MANUAL AND" Logic Test#

NOTE: If the aft attendant panel has an active SNSR OFF FWD TANK (AFT TANK) switch, the LCM has "MANUAL AND" LOGIC. For "MANUAL AND" Logic LCMs, perform the following procedure to verify correct operation of the "MANUAL AND" Logic.

BOEING PROPRIETARY - Copyright (C) - Unpublished Work - See title page for details.

MECH	INSP

(1) Do these steps to test the waste tank shutdown process.

NOTE: The continuous or auto "AND" logic for the waste tank process is the preferred configuration for the Drexelbrook LCM. If the attendant panel has an active SNSR OFF FWD TANK (AFT TANK) switch, the LCM is a "MANUAL AND" logic type. This LCM type is the alternate configuration.

In this procedure it can be 30 seconds before SNSR OFF lights come on due to a built-in time delay. Make sure you press and hold the SNSR OFF switch for 30 seconds.

WARNING: MAKE SURE THE DOWNLOCKS ARE INSTALLED ON THE NOSE AND MAIN LANDING GEAR BEFORE YOU MOVE THE CONTROL LEVER FOR THE LANDING GEAR. IF THE CONTROL LEVER IS MOVED WITHOUT THE DOWNLOCKS INSTALLED, THE LANDING GEAR CAN RETRACT AND CAUSE INJURY TO PERSONNEL OR DAMAGE TO EQUIPMENT.

(2) Make sure the downlocks are installed on the nose and main landing gear (AMM 32-00-20/201).

(3) Remove the power from the left, center, and right hydraulic systems (AMM 29-11-00/201).

(4) Open this circuit breaker on the overhead panel, P11, and attach DO-NOT-CLOSE tag:

(a) 11U26, TAIL SKID CONT

(5) Make sure this circuit breaker on the overhead panel, P11, is closed:

(a) 11N31, LIGHTING WING LANDING DIM CONT

(6) Disconnect the electrical connector for SENSOR 1 from the forward logic module, M964.

(7) Look at the forward logic module and do these steps:

(a) Make sure the SENSOR 1 indicator light comes on.

(b) Make sure the TANK FULL indicator light comes on.

(8) Look at the aft attendant panel, P22, and do these steps:

BOEING PROPRIETARY - Copyright (C) - Unpublished Work - See title page for details.

MECH	INSP

(a) Make sure the LAV INOP FWD TANK switch-light comes on.

(9) Move the LANDING GEAR LEVER on the pilot's center instrument panel, P2, to the DOWN position.

(10) Look at the forward logic control module and do these steps:

(a) Make sure the SENSOR 1 indicator light is on.

(b) Make sure the TANK FULL indicator light is on.

(11) Look at the aft attendant panel (P22) and do these steps:

(a) Make sure the LAV INOP FWD TANK switch-light is on.

(b) Make sure the SENSOR OFF FWD TANK switch-light is out.

(12) Move the LANDING GEAR LEVER on the P2 panel to the UP position.

(13) Press and release the SENSOR OFF FWD TANK switch-light on the P22 panel.

(14) Look at the P22 panel and do these steps:

(a) Make sure the SENSOR OFF FWD TANK switch-light comes on.

(b) Make sure the LAV INOP FWD TANK switch-light goes out.

(15) Look at the forward logic control module and do these steps:

(a) Make sure the SENSOR 1 indicator light is on.

(b) Make sure the TANK FULL indicator light goes out.

(16) Do the test of the SENSOR OFF switch again but use the AFT components in place of the FWD components. See the table that follows:

BOEING PROPRIETARY - Copyright (C) - Unpublished Work - See title page for details.

FWD Component	AFT Component
FWD LOGIC MODULE (M964)	AFT LOGIC MODULE (M965)
LAV INOP FWD TANK switch-light	LAV INOP AFT TANK switch-light
SENSOR OFF FWD TANK switch-light	SENSOR OFF AFT TANK switch-light

(17) Connect the electrical connector for SENSOR 1 to the forward logic module.

(18) Move the LANDING GEAR LEVER on the P2 panel to the DOWN position.

(19) Remove the DO-NOT-CLOSE tag and close this circuit breaker on the P11 panel:

(a) 11U26, TAIL SKID CONT

(20) Supply hydraulic power if it was removed at the start of the procedure (AMM 29-11-00/201).

E. AIRPLANES WITH THE ROSEMOUNT (LCM);
Level Sensor BITE Test

NOTE: There is one LCM for each waste tank. Do the test separately for the forward and the aft waste tank.

(1) From the waste service panel, 163AL, do these steps:

(a) Open the door for the waste tank service panel, 163AL, (AMM 52-49-00/001).

(b) Push the WASTE SENSOR(S) FOULED switch-light, for the FWD TANK (AFT TANK) that is on the waste service panel.

1) Make sure the appropriate WASTE SENSOR FOULED light comes ON.

(2) From the logic control modules (LCM) at the waste tanks, do these steps:

BOEING PROPRIETARY - Copyright (C) - Unpublished Work - See title page for details.

(a) Make sure the POWER indicator light on the LCM for the forward (aft) waste tank is ON.

(b) Put the switch on the LCM in the TEST SENSORS position and hold it there for a minimum of 6 seconds and release. Make sure the lights shown below come ON while you hold the switch:

NOTE: The lights will flash every three seconds while you hold the switch. The lights will go out in 3 seconds or less after you release the switch. If the lights continue to flash after you release the switch, there is an error in the level sensor system.

1) On the LCM, the SENSOR J1, the SENSOR J2, the SENSOR J3, and the TANK FULL indicator lights.

NOTE: The TANK FULL light must not flash after it goes out.

2) On the attendant panel, the LAV INOP and the SNSR FOUL lights for the FWD TANK (AFT TANK).

3) On the waste service panel, the WASTE SENSOR FOULED light for the FWD TANK (AFT TANK).

(3) From the aft attendant panel, P22, do these steps:

(a) Push the SNSR FOUL FWD TANK (AFT TANK) switch-light that is on the attendant panel.

1) Make sure the appropriate SNSR FOUL light comes ON.

(b) Push the LAV INOP FWD TANK (AFT TANK) switch-light on the attendant panel and hold it in for a minimum of 6 seconds and release. Make sure the lights shown below come ON while you hold the switch in:

NOTE: The lights will flash every three seconds while you hold the switch in. The lights will go out in 3 seconds or less after you release the switch. If the lights continue to flash after you release the switch, there is an error in the level sensor system.

BOEING PROPRIETARY - Copyright (C) - Unpublished Work - See title page for details.

MECH	INSP

1) On the attendant panel, the LAV INOP FWD TANK (AFT TANK) light and the SNSR FOUL FWD TANK (AFT TANK) light.

2) On the LCM, the SENSOR J1, the SENSOR J2, the SENSOR J3, and the TANK FULL indicator lights.

3) On the waste service panel, the WASTE SENSOR FOULED FWD TANK (AFT TANK) light.

F. Put the Airplane Back to its Usual Condition.

(1) Install the aft bulkhead lining in the bulk cargo compartment (AMM 25-52-01/401).

(2) Close the bulk cargo door, 811.

(3) Remove electrical power if it is not necessary (AMM 24-22-00/201).

BOEING PROPRIETARY - Copyright (C) - Unpublished Work - See title page for details.

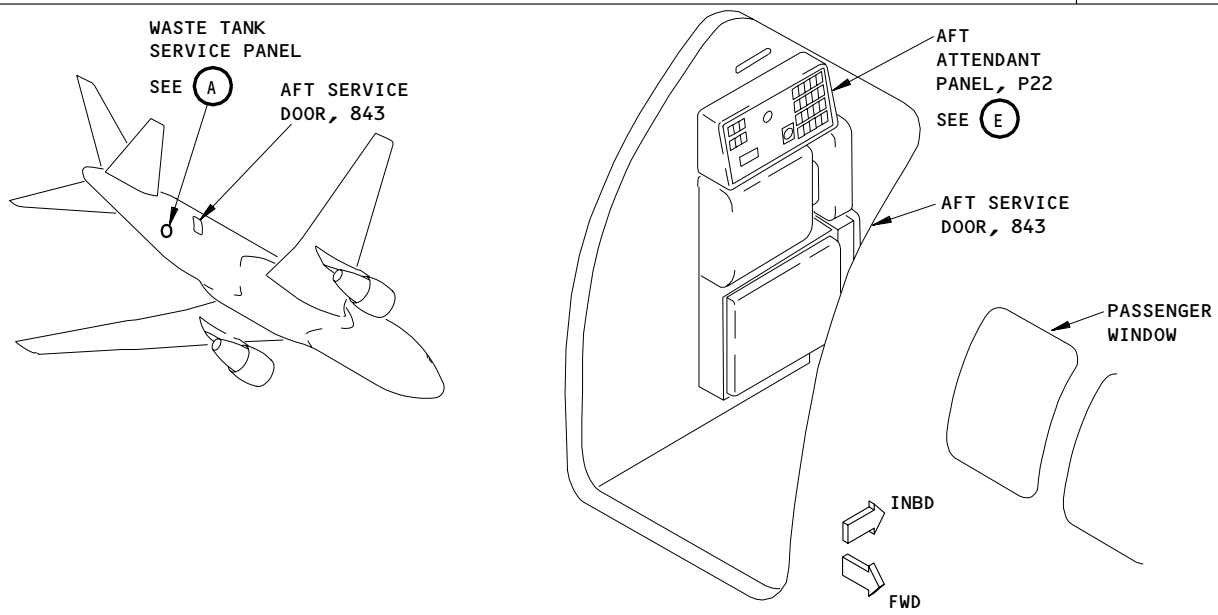

AFT ATTENDANT PANEL

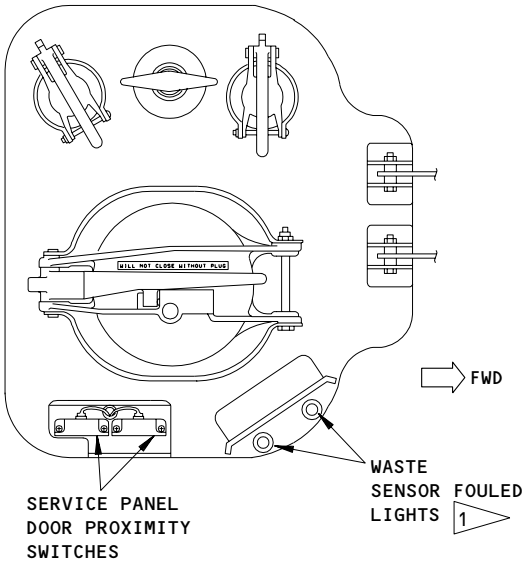

WASTE TANK SERVICE PANEL

A

1 NOT INSTALLED ON ALL AIRPLANES

Waste Tank Quantity Indication System Test
Figure 501 (Sheet 1)

BOEING PROPRIETARY - Copyright (C) - Unpublished Work - See title page for details.

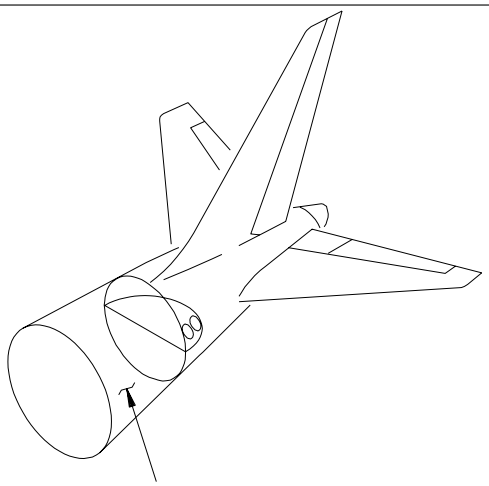

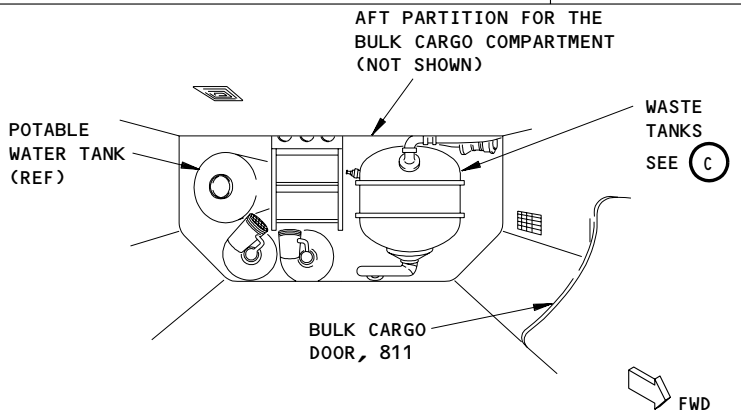

BULK CARGO COMPARTMENT

B

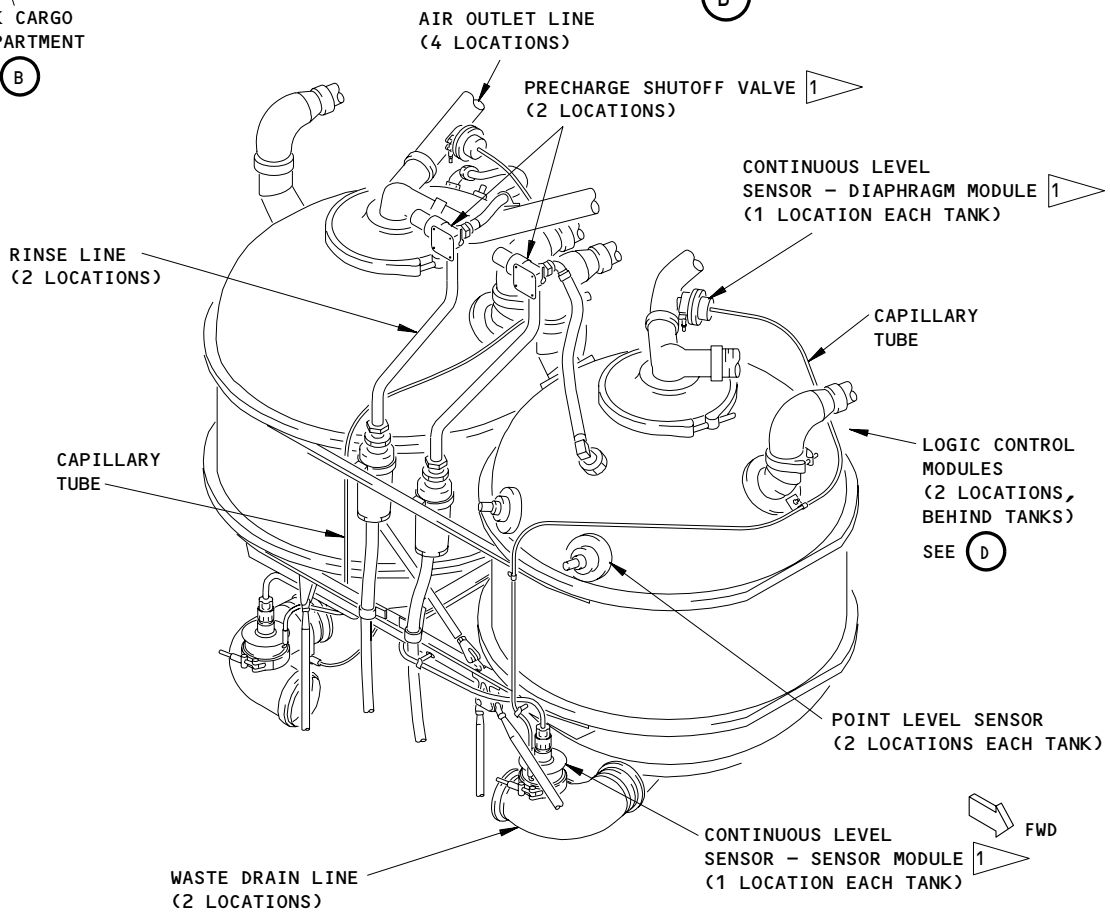

WASTE TANKS

C

1 NOT INSTALLED ON ALL AIRPLANES

Waste Tank Quanitiy Indication System Test
Figure 501 (Sheet 2)

BOEING PROPRIETARY - Copyright (C) - Unpublished Work - See title page for details.

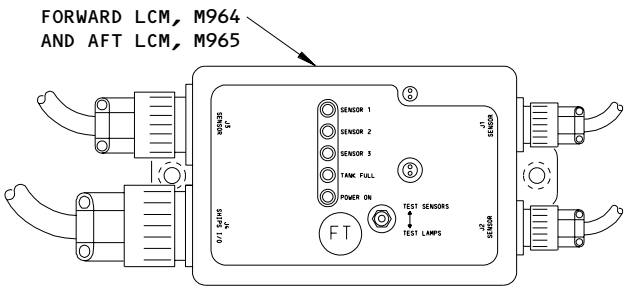

LOGIC CONTROL MODULE
(ROSEMOUNT)

F 3

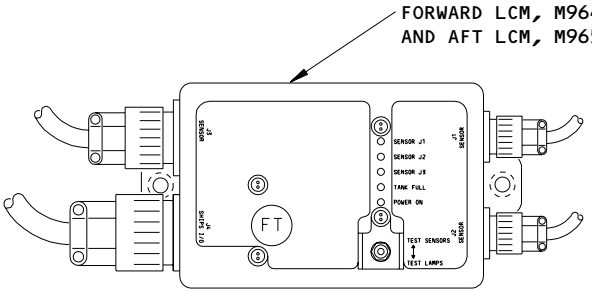

LOGIC CONTROL MODULE
(ROSEMOUNT)

F 4

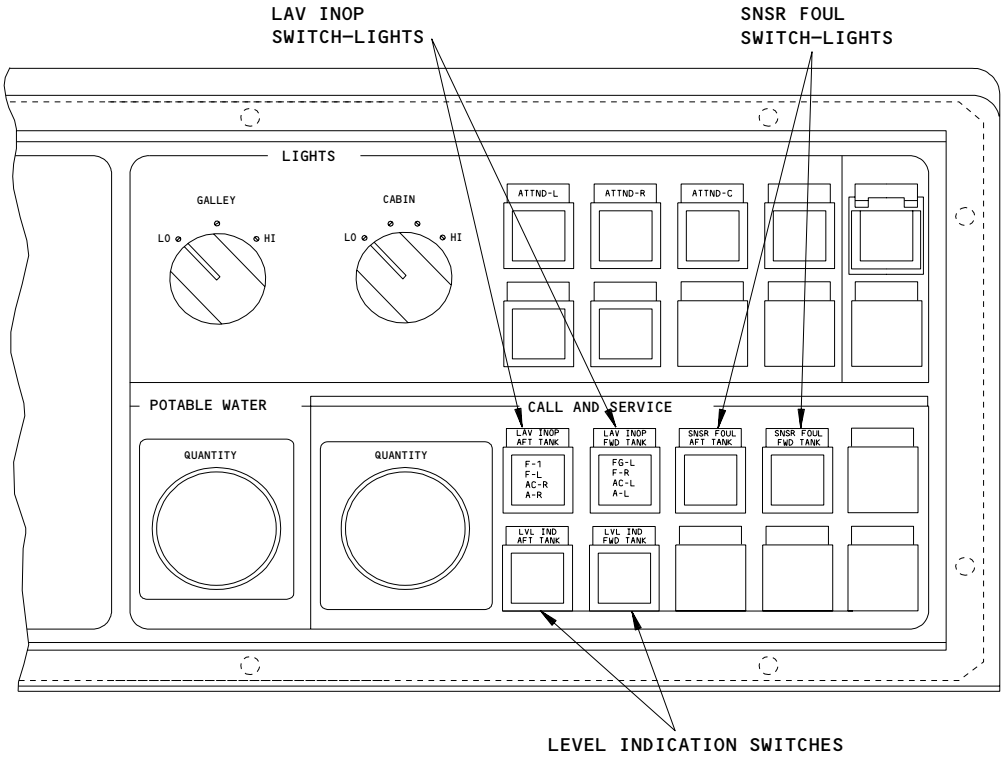

ATTENDANT PANEL, P22, USED WITH ROSEMOUNT LCM
(TYPICAL)

G

3 LCM WITHOUT A GUARD ON TEST SWITCH

4 LCM WITH A GUARD ON TEST SWITCH

Waste Tank Quantity Indication System Test
Figure 501 (Sheet 4)

BOEING PROPRIETARY - Copyright (C) - Unpublished Work - See title page for details.

SKILL	WORK AREA	RELATED TASK	INTERVAL	PHASE	MPD REV	TASK CARD REVISION
AIRPL	BULK CARGO		1C	11212	012	DEC 22/07

TASK	TITLE	STRUCTURAL ILLUSTRATION REFERENCE	APPLICABILITY AIRPLANE	APPLICABILITY ENGINE
REPLACE	VACUUM BLOWER AIR FILTERS		PASS	ALL

ZONES	ACCESS PANELS
166	1651 811

MECH | INSP | MPD ITEM NUMBER

REPLACE VACUUM BLOWER AIR FILTERS (IF INSTALLED). 38-32-06-4A

ACCESS NOTE: SPECIAL ACCESS 1651 REQUIRES REMOVAL OF THE BULK CARGO COMPT AFT WALL PANELS.

1. VACUUM BLOWERS WITH AN AIR FILTER;
   Removal/Installation of the Air Filter on the Vacuum Blower (Fig. 401)

   A. References

      (1) AMM 25-52-01/401, Containerized Cargo Compartment Sidewall Lining

      (2) AMM 38-32-00/201, Deactivate/Activate Vacuum Blower and Lav Flush System

      (3) AMM 52-36-00/001, Bulk Cargo Door

   B. Remove the Air Filter

      (1) Deactivate the vacuum blower and lavatory flush system (AMM 38-32-00/501).

      (2) Open the bulk cargo door, 811 (AMM 52-36-00/001).

      (3) Remove the aft bulkhead lining or waste tank enclosure panel of the bulk cargo compartment (AMM 25-52-01/401).

      CAUTION: USE TOOLS CAREFULLY BECAUSE THE WASTE TANKS ARE A HONEYCOMB WITH A GRAPHITE COMPOSITE SKIN, WHICH IS EASILY DAMAGED. IF YOU HIT THE TANK WITH LOW ENERGY, THIS CAN CAUSE DAMAGE THAT YOU CANNOT SEE BEFORE A TANK FAILS. DO NOT HIT THE WASTE TANK, BECAUSE DAMAGE CAN OCCUR.

BOEING PROPRIETARY - Copyright (C) - Unpublished Work - See title page for details.

MECH	INSP

(4) Remove the packing that attaches the air filter to the vacuum blower.

(5) Remove the air filter from the vacuum blower.

C. Vacuum Blower Filter Cleaning

(1) Clean the vacuum blower filter with an air source with 5 to 30 PSIG in the opposite direction of the usual flow.

(2) Do a check of the vacuum blower filter for damage or signs of worn areas.

(a) If the vacuum blower filter has damage or signs of worn areas, use a new vacuum blower filter.

(b) If the vacuum blower filter is serviceable, then continue.

D. Install the Air Filter

(1) Put the air filter on the vacuum blower.

(2) Install the packing to attach the air filter to the vacuum blower.

(3) Activate the vacuum blower and lavatory flush system (AMM 38-32-00/501).

(4) Supply electrical power (AMM 24-22-00/201).

(5) Make sure the vacuum blower operates as follows:

(a) Make sure the vacuum blower starts when you push the flush switch for a toilet attached to the system for the vacuum blower.

NOTE: If the vacuum blower operates before you push the flush switch, there is a problem in the control circuits.

(b) Make sure the vacuum blower stops approximately 15 seconds after you push the flush switch for the vacuum blower.

NOTE: If the vacuum blower continues to operate after approximately 15 seconds, there is a problem in the control circuits.

BOEING PROPRIETARY - Copyright (C) - Unpublished Work - See title page for details.

MECH	INSP

WARNING: OBEY THE INSTRUCTIONS IN THE CARGO LINING INSTALLATION PROCEDURE. INCORRECT INSTALLATION OF THE CARGO LINING CAN LET THE FIRE EXTINGUISHING AGENT OR SMOKE OUT OF THE CARGO COMPARTMENT DURING A FIRE.

(6) Install the aft bulkhead lining or waste tank enclosure panel of the bulk cargo compartment (AMM 25-52-01/401).

(7) Close bulk cargo door, 811 (AMM 52-36-00/001).

BOEING PROPRIETARY - Copyright (C) - Unpublished Work - See title page for details.

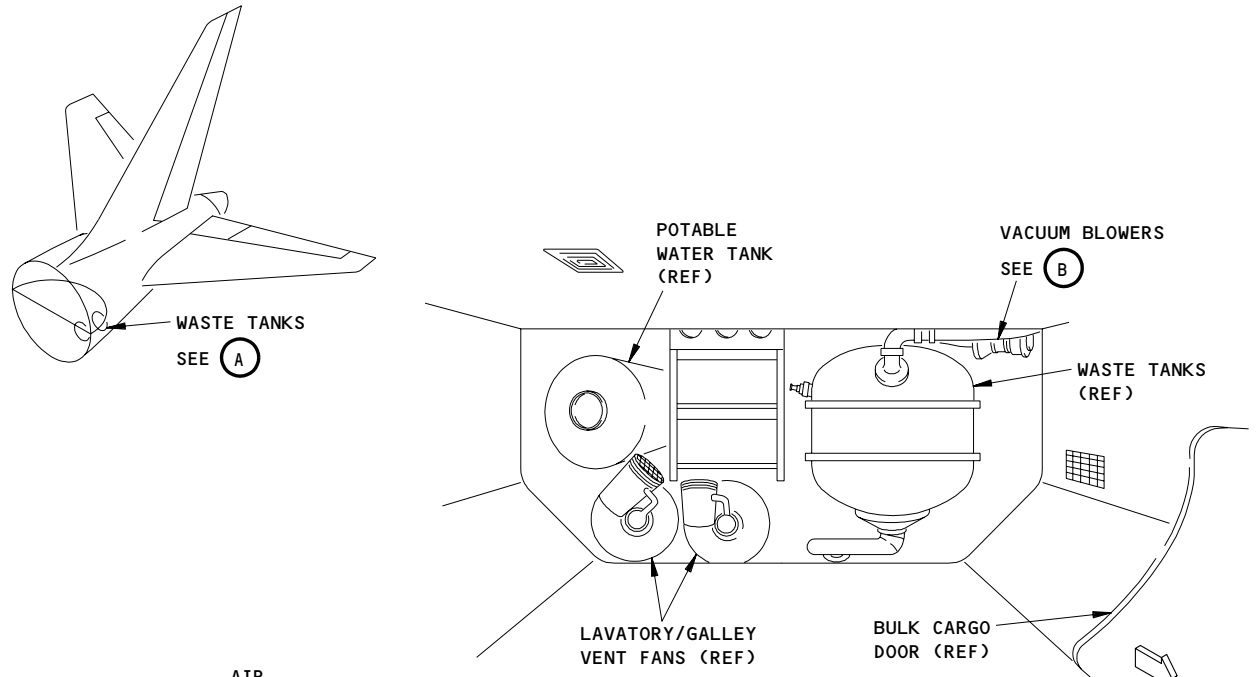

WASTE TANKS

A

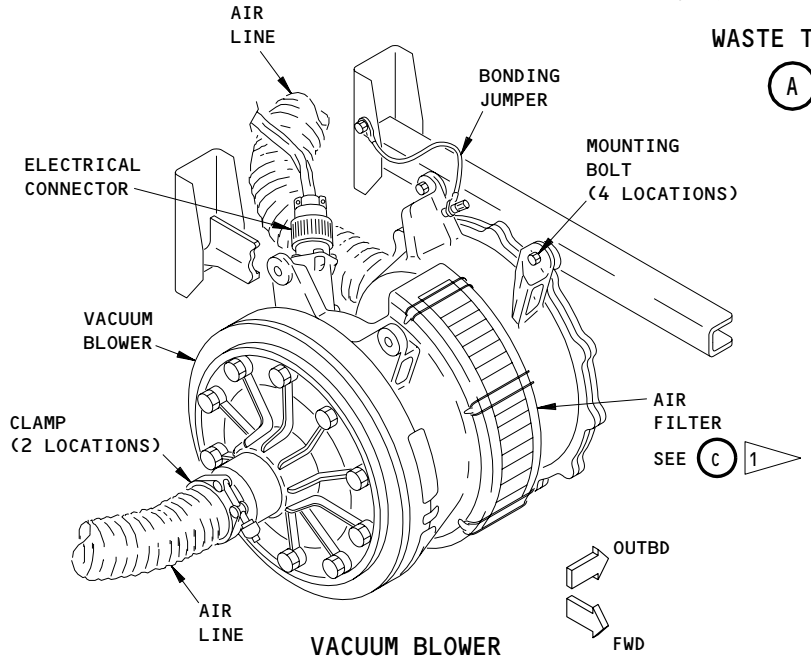

VACUUM BLOWER
(EXAMPLE)

B

1 AIR FILTER NOT ON ALL BLOWERS

Vacuum Blower Installation
Figure 401 (Sheet 1)

BOEING PROPRIETARY - Copyright (C) - Unpublished Work - See title page for details.

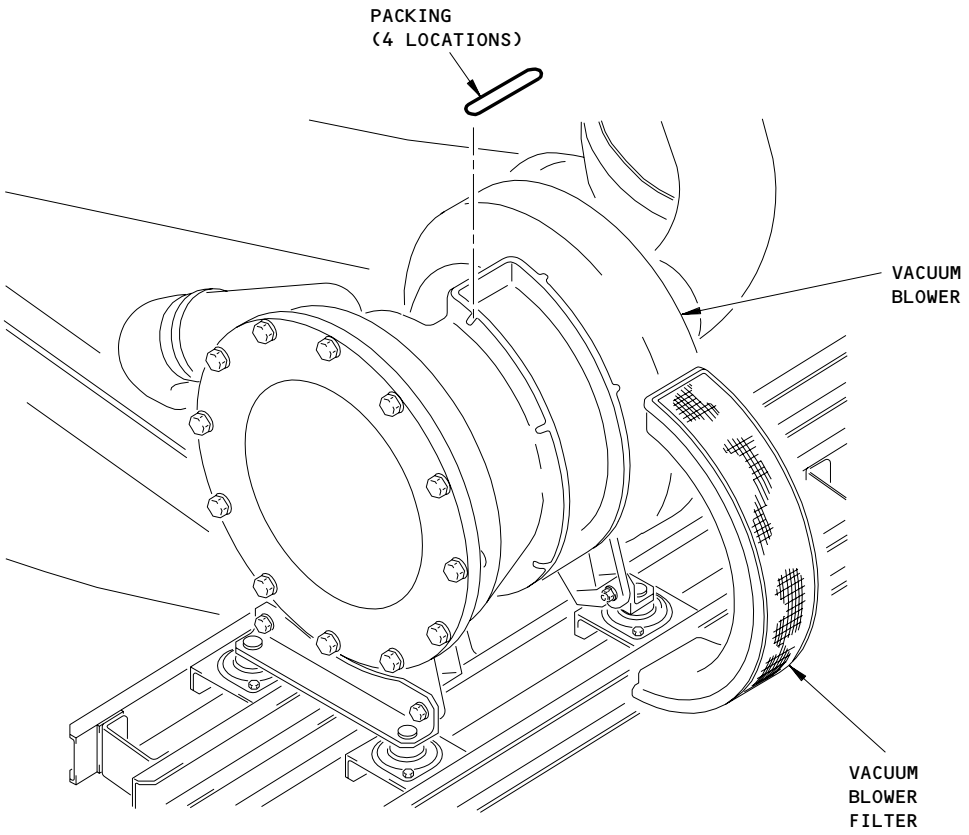

AIR FILTER
(EXAMPLE)
C

Vacuum Blower Installation
Figure 401 (Sheet 2)

BOEING PROPRIETARY - Copyright (C) - Unpublished Work - See title page for details.

STATION		BOEING CARD NO.
TAIL NO.	SAS BOEING 767 TASK CARD	38-009-01
DATE		AIRLINE CARD NO.

SKILL	WORK AREA	RELATED TASK	INTERVAL	PHASE	MPD REV	TASK CARD REVISION
AIRPL	BULK CARGO		1C	11212	017	DEC 22/03

TASK	TITLE	STRUCTURAL ILLUSTRATION REFERENCE	APPLICABILITY AIRPLANE	APPLICABILITY ENGINE
CHECK/INSP	WASTE TANK LEVEL SENSORS/SEPARATOR		NOTE	ALL

ZONES	ACCESS PANELS
165	1651 811

MECH	INSP	MPD ITEM NUMBER
		38-32-11-2A

VISUALLY INSPECT THE WASTE TANK POINT LEVEL SENSORS SENSING FACE AND WATER SEPARATOR FOR CONTAMINATION.

AIRPLANE NOTE: SB 767-38-031. TASK IS APPLICABLE TO AIRPLANES LINE NUMBERS 1-283 THAT HAVE NOT INCORPORATED SERVICE BULLETIN 767-38-031.

ACCESS NOTE: SPECIAL ACCESS 1651 REQUIRES REMOVAL OF THE BULK CARGO COMPT AFT WALL PANELS.

1. Examine the Waste Tank for Contamination (Fig. 201)

   A. References

      (1) AMM 12-17-01/301, Waste Tank

      (2) AMM 24-22-00/201, Manual Control

      (3) AMM 25-52-01/401, Containerized Cargo Compartment Sidewall Lining

      (4) AMM 38-32-00/201, Standard Procedures with Lav Waste and Equipment

      (5) AMM 38-32-00/201, Deactivate/Activate Vacuum Blower/Lav Flush System

      (6) AMM 38-32-02/201, Water Separator

      (7) AMM 38-33-01/701, Water Tank Point Level Sensor

      (8) AMM 38-32-17/201, Rinse Nozzle

      (9) AMM 52-36-00/001, Bulk Cargo Door

   B. Procedure

BOEING PROPRIETARY - Copyright (C) - Unpublished Work - See title page for details.

MECH	INSP

(1) Do the standard procedures for working with the toilet waste and equipment (AMM 38-32-00/201).

(2) Drain and flush the waste tank but do not add the chemical precharge (AMM 12-17-01/301).

NOTE: Keep the drain line of the toilet service cart connected to the airplane.

(3) Deactivate the vacuum blower and lavatory flush system (AMM 38-32-00/201).

(4) Open the bulk cargo door, 811 (AMM 52-36-00/001).

(5) Remove the aft bulkhead lining or waste tank enclosure panel of the bulk cargo compartment (AMM 25-52-01/401).

CAUTION: USE TOOLS CAREFULLY BECAUSE THE WASTE TANKS ARE A HONEYCOMB WITH A GRAPHITE COMPOSITE SKIN, WHICH IS EASILY DAMAGED. IF YOU HIT THE TANK WITH LOW ENERGY, THIS CAN CAUSE DAMAGE THAT YOU CANNOT SEE BEFORE A TANK FAILS. DO NOT HIT THE WASTE TANK, BECAUSE DAMAGE CAN OCCUR.

(6) Remove the water separator from the waste tank (AMM 38-32-02/201).

(7) Use a flashlight and a mirror to look at the inner surface of the point level sensors in the waste tank. The inner surface of the point level sensors must not have a layer of waste on them.

(8) If the point level sensors have a layer of waste on the inner surface, clean the point level sensors (AMM 38-33-01/701).

(9) Make sure the rinse nozzles are serviceable (AMM 38-32-17/201).

(10) Use a flashlight and a mirror to look for waste on the inner surface of the waste tank. If the inner side of the waste tank has a layer of soft loose waste you must clean the waste tank.

NOTE: A thin layer of a hard material (scale) on the inner side of the waste tank is permitted.

(11) Do these steps to make sure the water separator is serviceable:

BOEING PROPRIETARY - Copyright (C) - Unpublished Work - See title page for details.

MECH	INSP

(a) If the water separator is dirty but the top surface of the demister mesh does not have fiber contamination (waste and paper particles), clean the water separator (AMM 38-32-02/201).

(b) If the top surface of the demister mesh of the water separator has fiber contamination (waste and paper particles), replace the water separator.

(12) Install the water separator (AMM 38-32-02/201).

(13) Do the servicing procedure for the waste system (AMM 12-17-01/301).

(14) Use the procedure above to examine the other waste tank.

(15) Activate the vacuum blower and lav flush system (AMM 38-32-00/201).

(16) Supply electrical power (AMM 24-22-00/201).

(17) Flush the toilets and make sure the upper caps on the waste tanks do not have leaks.

(18) Remove electrical power if it is not necessary (AMM 24-22-00/201).

BOEING PROPRIETARY - Copyright (C) - Unpublished Work - See title page for details.

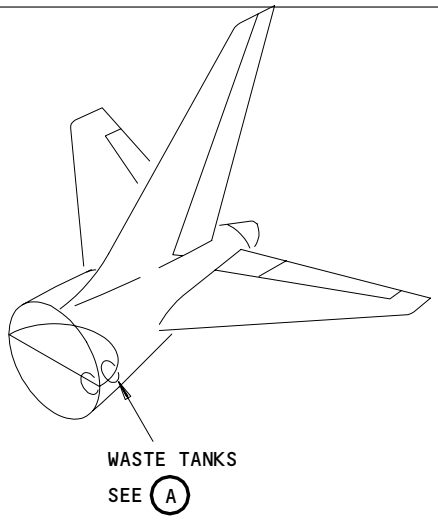

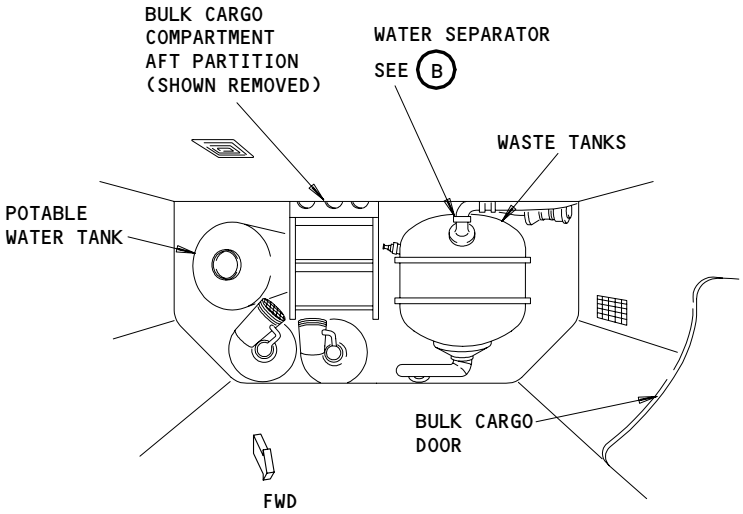

WASTE TANKS

A

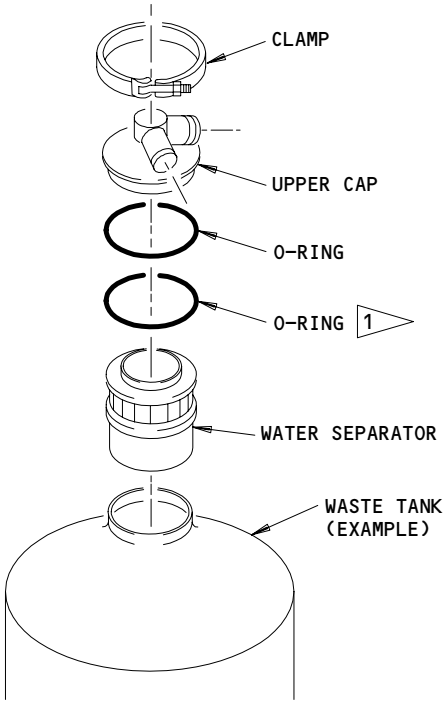

WATER SEPARATOR

B

1 AIRPLANES WITH TWO RINGS

Water Separator and Waste Tank
Figure 201

BOEING PROPRIETARY - Copyright (C) - Unpublished Work - See title page for details.

STATION		BOEING CARD NO.
TAIL NO.	SAS BOEING 767 TASK CARD	38-010-01
DATE		AIRLINE CARD NO.

SKILL	WORK AREA	RELATED TASK	INTERVAL	PHASE	MPD REV	TASK CARD REVISION
AIRPL	FUSELAGE		4C	14848	013	AUG 22/08

TASK	TITLE	STRUCTURAL ILLUSTRATION REFERENCE	APPLICABILITY AIRPLANE	APPLICABILITY ENGINE
FUNCTIONAL	PRESSURE ACTUATED COMPRESSOR SWITCH		PASS	ALL

ZONES	ACCESS PANELS
166	1651 811

MECH	INSP	MPD ITEM NUMBER

FUNCTIONALLY CHECK THE SETTING OF THE POTABLE WATER PRESSURE ACTUATED COMPRESSOR SWITCH. 38-10-00-5A

ACCESS NOTE: SPECIAL ACCESS 1651 REQUIRES REMOVAL OF THE BULK CARGO COMPT AFT WALL PANELS.

1. Pressure Switch - Functional Check (Fig. 501 and Fig. 502)

A. Equipment

(1) Gage, Pressure, 0-75 psig (0-500 kPa) - Commercially Available

B. References

(1) AMM 12-14-01/301, Potable Water Servicing

(2) AMM 24-22-00/201, Electrical Control

(3) AMM 25-52-01/401, Containerized Cargo Compartment Sidewall Lining

(4) AMM 52-36-00/001, Bulk Cargo Door

C. Access

(1) Location Zone
155 Area Below the Aft Cargo Compartment (Left)
166 Area Aft of Bulk Cargo Compartment (Right)

(2) Access Panels
155AL Potable Water Service Panel
811 Bulk Cargo Door

D. Procedure

BOEING PROPRIETARY - Copyright (C) - Unpublished Work - See title page for details.

MECH	INSP

(1) Supply electrical power (AMM 24-22-00/201).

(2) AIRPLANES WITH THE TWO-PORT SERVICE PANEL (SEPARATE FILL AND DRAIN); Fill the potable water system (AMM 12-14-01/301). Do not close the WATER TANK FILL VALVE.

(3) AIRPLANES WITH THE ONE-PORT AFT SERVICE PANEL (COMBINED FILL/DRAIN); Fill the potable water system (AMM 12-14-01/301).

NOTE: Do not close the service panel door.

(a) Make sure the potable water system is full.

(4) Depressurize the pneumatic system, as necessary (AMM 36-00-00/201).

(5) Open the bulk cargo door, 811 (AMM 52-36-00/001).

(6) Remove the aft bulkhead lining of the bulk cargo compartment (AMM 25-52-01/401).

(7) Find the airplane pneumatic supply air filter, that is on the aft side of the floor beam that is immediately forward of the right main the water tank.

(8) Disconnect the air line from the outlet (right) side of the airplane pneumatic supply air filter assembly, and install the pressure gauge.

(9) AIRPLANES WITH THE TWO-PORT SERVICE PANEL (SEPARATE FILL AND DRAIN); At the water service panel (155AL), push the WATER TANK FILL VALVE handle in, to the stop.

(10) AIRPLANES WITH THE ONE-PORT AFT SERVICE PANEL (COMBINED FILL/DRAIN); To pressurize the water system, close the service panel door.

(11) Make sure the air compressor stops when the pressure gets to 39.5 ± 1.5 psig.

(12) AIRPLANES WITH THE TWO-PORT SERVICE PANEL (SEPARATE FILL AND DRAIN); Slowly bleed the air from the potable water system by manually opening the WATER TANK FILL VALVE (also known as the FILL/OVERFLOW VALVE) located above and to the right of the right main water tank. At the same time, hold the compressor interlock switch on the WATER TANK FILL VALVE closed.

BOEING PROPRIETARY - Copyright (C) - Unpublished Work - See title page for details.

MECH	INSP

(13) AIRPLANES WITH THE ONE-PORT AFT SERVICE PANEL (COMBINED FILL/DRAIN); Slowly bleed the air from the potable water system by manually opening the vent/overflow valve with the actuator found on the valve above and to the right of the right main water tank.

(14) Make sure the air compressor starts when the pressure gets to 30 ± 1.0 psig.

(15) AIRPLANES WITH THE TWO-PORT SERVICE PANEL (SEPARATE FILL AND DRAIN); Open the WATER TANK FILL VALVE to release the pressure from the potable water system.

(16) AIRPLANES WITH THE ONE-PORT AFT SERVICE PANEL (COMBINED FILL/DRAIN); Open the WATER TANK FILL VALVE to release the pressure from the potable water system.

(17) Remove the pressure gage from the potable water system.

(18) Re-ccnnect the air line to the pneumatic supply air filter assembly.

(19) Close the WATER TANK FILL VALVE.

WARNING: OBEY THE INSTRUCTIONS IN THE PROCEDURE TO INSTALL THE CARGO LINING. THE INCORRECT INSTALLATION OF THE CARGO LINING CAN LET THE FIRE EXTINGUISHING AGENT OR SMOKE OUT OF THE CARGO COMPARTMENT DURING A FIRE.

(20) Install the aft bulkhead lining of the bulk cargo compartment (AMM 25-52-01/401).

(21) Close the bulk cargo door, 811 (AMM 52-36-00/001).

(22) Remove electrical power if it is not necessary (AMM 24-22-00/201).

BOEING PROPRIETARY - Copyright (C) - Unpublished Work - See title page for details.

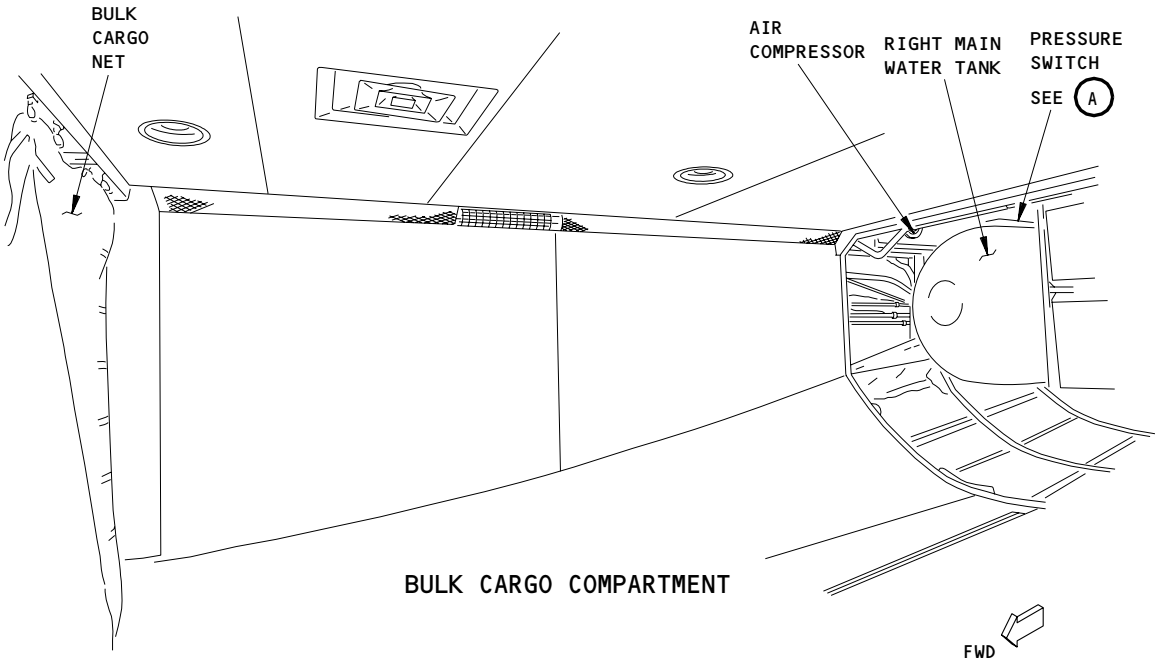

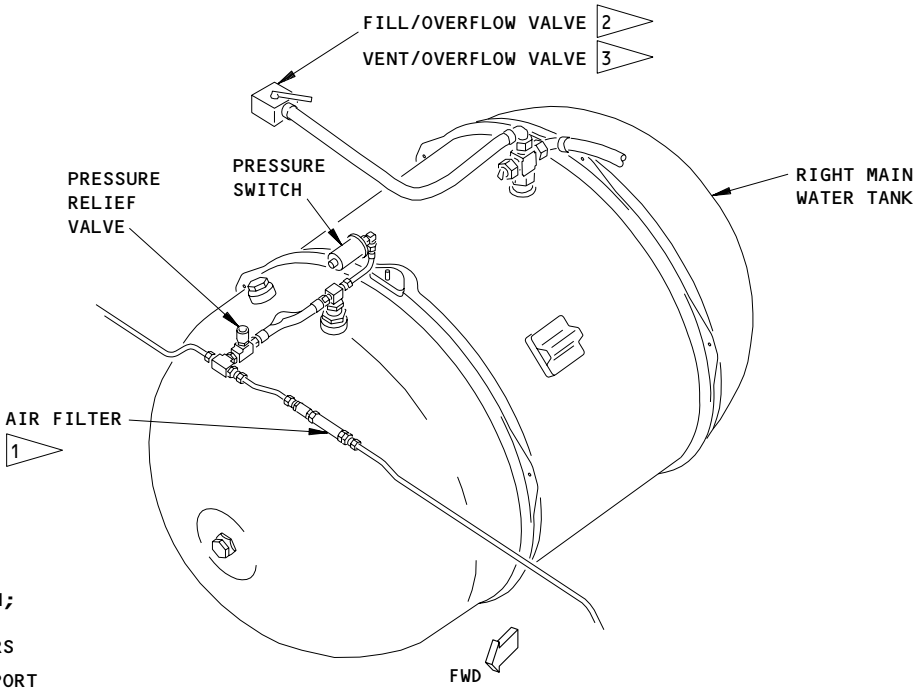

1 IN-LINE FILTER SHOWN; SOME AIRPLANES HAVE CANISTER TYPE FILTERS

2 AIRPLANES WITH TWO-PORT SERVICE PANEL (SEPARATE FILL AND DRAIN PORTS)

3 AIRPLANES WITH ONE-PORT SERVICE PANEL (COMBINED FILL/DRAIN PORT)

PRESSURE SWITCH

A

Potable Water System Test
Figure 501

BOEING PROPRIETARY - Copyright (C) - Unpublished Work - See title page for details.

STATION		BOEING CARD NO.
TAIL NO.	SAS BOEING 767 TASK CARD	38-011-01
DATE		AIRLINE CARD NO.

SKILL	WORK AREA	RELATED TASK	INTERVAL	PHASE	MPD REV	TASK CARD REVISION
AIRPL	FUSELAGE		4C	14848	012	DEC 22/08

TASK	TITLE	STRUCTURAL ILLUSTRATION REFERENCE	APPLICABILITY AIRPLANE	APPLICABILITY ENGINE
FUNCTIONAL	WATER TANK PRESSURE RELIEF VALVE		PASS	ALL

ZONES	ACCESS PANELS
166	1651 811

MECH	INSP	MPD ITEM NUMBER

CHECK RELIEF SETTING OF POTABLE WATER TANK PRESSURE RELIEF VALVE. 38-15-06-2A

ACCESS NOTE: SPECIAL ACCESS 1651 REQUIRES REMOVAL OF THE BULK CARGO COMPT AFT WALL PANELS.

1. Pressure Relief Valve - Removal (Fig. 201)

A. References

(1) AMM 24-22-00/201, Manual Control

(2) AMM 38-10-00/201, Potable Water System - Release Pressure

(3) AMM 52-36-00/001, Bulk Cargo Door

B. Removal Procedure

(1) To release pressure from the potable water system, do this task: Potable Water System - Release Pressure (AMM 38-10-00/201).

(2) Open the bulk cargo door, 811 (AMM 52-36-00/001).

(3) Disconnect the quick-disconnect fasteners and remove the aft bulkhead lining of the bulk cargo compartment.

WARNING: PRE SB 38-0051 AIRPLANES;
DO NOT TURN THE DEFLECTOR CAP WHEN YOU REMOVE OR INSTALL THE PRESSURE RELIEF VALVE. THE PRESSURE AT WHICH THE RELIEF VALVE RELEASES PRESSURE CAN CHANGE IF THE DEFLECTOR CAP TURNS. IF THE PRESSURE RELIEF VALVE DOES NOT RELEASE AT THE CORRECT PRESSURE, INJURIES TO PERSONS AND DAMAGE TO EQUIPMENT CAN OCCUR.

BOEING PROPRIETARY - Copyright (C) - Unpublished Work - See title page for details.

(4) Remove the pressure relief valve from the tee fitting.

(5) Put a cap on the tee fitting to keep contamination out of the potable water system.

2. Pressure Relief Valve Test (Fig. 202)

A. General

(1) This functional test checks the pressure at which pressure relief occurs and also the pressure at which the pressure relief valve resets.

(2) Gage - Pressure (0-75 psig ±0.5 psig)

(3) Valve - Control (pressure rating 150 psig minimum, 3/8 inch minimum globe type, 15 scfm minimum flow at 50 psid).

(4) Regulator - Pressure (pressure rated for air source, outlet pressure adjustable, zero to 80 psig, 3/8 inch minimum).

(5) Filter - Air (in-line type)

(6) Compressed Air Supply (80 psig, 15 scfm minimum)

B. Test Procedure

WARNING: PRE SB 38-0051 AIRPLANES;
DO NOT TURN THE DEFLECTOR CAP WHEN YOU REMOVE OR INSTALL THE PRESSURE RELIEF VALVE. THE PRESSURE AT WHICH THE RELIEF VALVE RELEASES PRESSURE CAN CHANGE IF THE DEFLECTOR CAP TURNS. IF THE PRESSURE RELIEF VALVE DOES NOT RELEASE AT THE CORRECT PRESSURE, INJURIES TO PERSONS AND DAMAGE TO EQUIPMENT CAN OCCUR.

(1) Connect these components to a source of compressed air that does not have oil, as shown in Fig. 202.

(a) Relief valve

(b) Control valve

(c) Pressure gage

(d) Pressure regulator

BOEING PROPRIETARY - Copyright (C) - Unpublished Work - See title page for details.

MECH	INSP

(e) Air filter

(2) To do a check of the relief pressure, do the following steps:

(a) Close the control valve.

(b) With the initial pressure at zero psig, slowly open the pressure regulator.

(c) Look at the pressure gage while you increase pressure.

(d) Keep a record of the initial pressure at which you find airflow or a sudden increase in airflow through the pressure relief valve.

NOTE: This pressure must be less than 75 psig.

(e) If the initial relief pressure is less than 57 psig or more than 75 psig, replace the pressure relief valve.

(3) To do a check of the reset pressure of the pressure relief valve, do the steps that follow:

(a) With the pressure at relief pressure, slowly close the pressure regulator.

(b) Look at the pressure gage while you decrease pressure.

(c) Keep a record of the reset pressure at which you find that airflow stops or the decrease of pressure stops through the pressure relief valve.

NOTE: This pressure must be more than 53 psig.

(d) If the reset pressure of the relief valve is less than 53 psig, replace the pressure relief valve.

(4) Reduce pressure to zero psig.

(5) Do a subsequent test of the pressure relief valve.

BOEING PROPRIETARY - Copyright (C) - Unpublished Work - See title page for details.

MECH | INSP

(a) Keep a record of the subsequent pressure at which you find airflow or a sudden increase in airflow through the pressure relief valve.

NOTE: This pressure must be between 57 and 63 psig.

(b) If the subsequent relief pressure is not in the 57 to 63 psig range, replace the pressure relief valve.

WARNING: PRE SB 38-0051 AIRPLANES;
DO NOT TURN THE DEFLECTOR CAP WHEN YOU REMOVE OR INSTALL THE PRESSURE RELIEF VALVE. THE PRESSURE AT WHICH THE RELIEF VALVE RELEASES PRESSURE CAN CHANGE IF THE DEFLECTOR CAP TURNS. IF THE PRESSURE RELIEF VALVE DOES NOT RELEASE AT THE CORRECT PRESSURE, INJURIES TO PERSONS AND DAMAGE TO EQUIPMENT CAN OCCUR.

3. Pressure Relief Valve - Installation (Fig. 201)

A. References

(1) AMM 24-22-00/201, Manual Control

(2) AMM 38-10-00/201, Potable Water System - Restore Pressure

(3) AMM 52-36-00/001, Bulk Cargo Door

B. Installation Procedure

(1) Remove the cap from the tee fitting.

WARNING: PRE SB 38-0051 AIRPLANES;
DO NOT TURN THE DEFLECTOR CAP WHEN YOU REMOVE OR INSTALL THE PRESSURE RELIEF VALVE. THE PRESSURE AT WHICH THE RELIEF VALVE RELEASES PRESSURE CAN CHANGE IF THE DEFLECTOR CAP TURNS. IF THE PRESSURE RELIEF VALVE DOES NOT RELEASE AT THE CORRECT PRESSURE, INJURIES TO PERSONS AND DAMAGE TO EQUIPMENT CAN OCCUR.

(2) Install the new O-ring packing on the pressure relief valve. Then install the valve in the Tee fitting.

BOEING PROPRIETARY - Copyright (C) - Unpublished Work - See title page for details.

MECH	INSP

(3) To restore pressure to the potable water system, do this task: Potable Water System - Restore Pressure (AMM 38-10-00/201).

(4) Make sure there are no air leaks at the pressure relief valve.

(5) Install the aft bulkhead lining of the bulk cargo compartment.

(6) Close the bulk cargo door, 811 (AMM 52-36-00/001).

(7) (1) Remove the electrical power if it is not necessary (AMM 24-22-00/201).

BOEING PROPRIETARY - Copyright (C) - Unpublished Work - See title page for details.

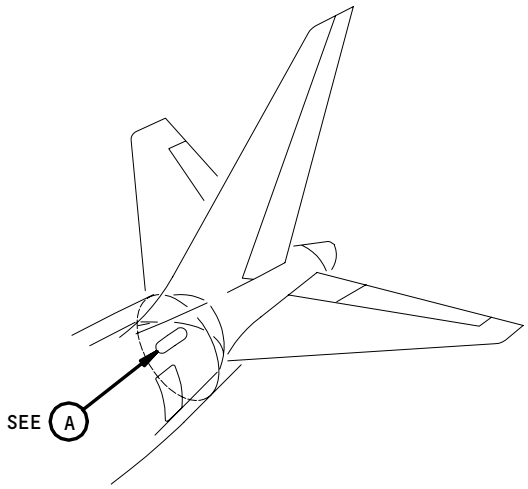

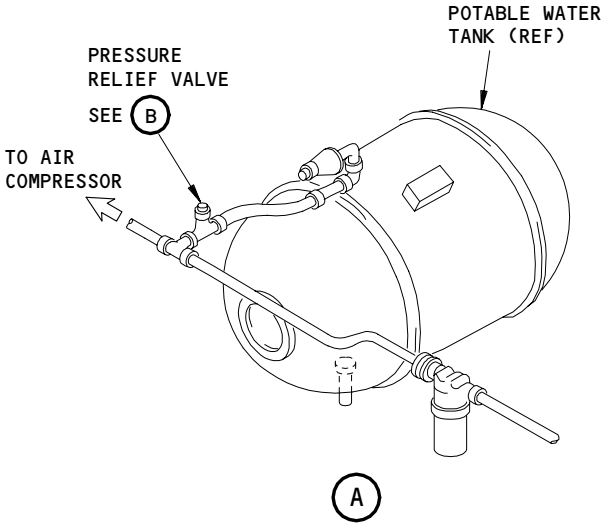

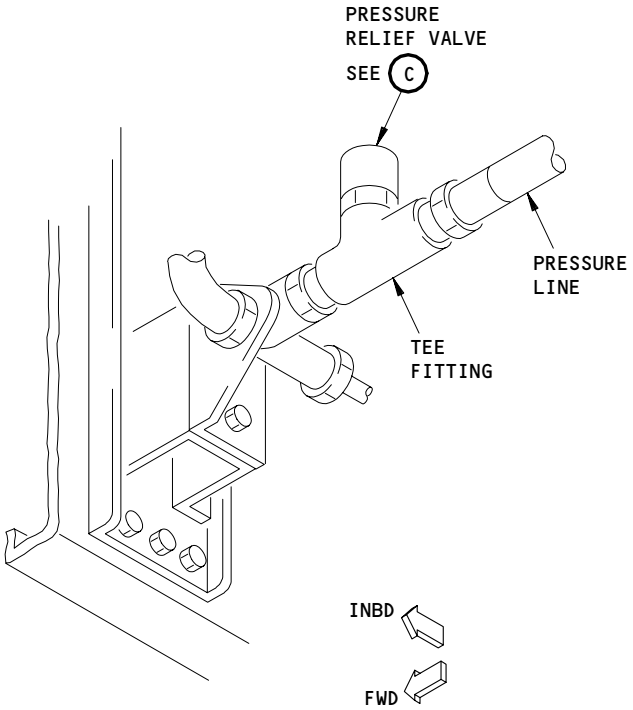

PRESSURE RELIEF VALVE

B

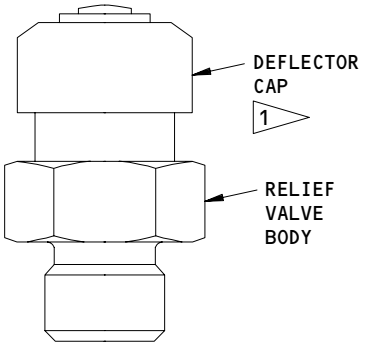

PRESSURE RELIEF VALVE

C

1 PRESSURE RELIEF VALVES WITH PART NUMBER 524TP6D60; DO NOT TURN THE DEFLECTOR CAP WHEN YOU REMOVE OR INSTALL THE PRESSURE RELIEF VALVE

Pressure Relief Valve Installation
Figure 201

BOEING PROPRIETARY - Copyright (C) - Unpublished Work - See title page for details.

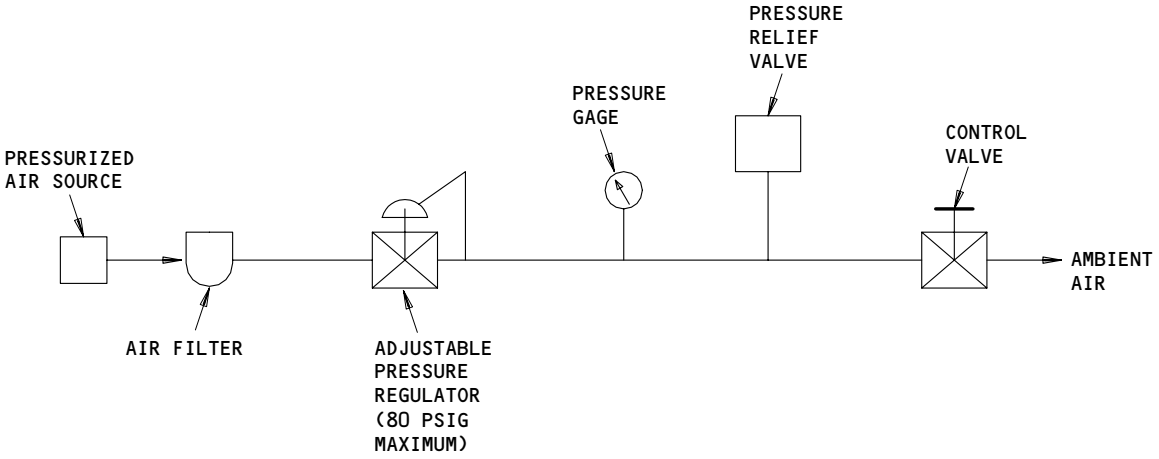

Pressure Relief Valve Test
Figure 202

BOEING PROPRIETARY - Copyright (C) - Unpublished Work - See title page for details.

SKILL	WORK AREA	RELATED TASK	INTERVAL	PHASE	MPD REV	TASK CARD REVISION
AIRPL	AFT COMPT		00500 CYC	10202	018	AUG 22/03

TASK	TITLE	STRUCTURAL ILLUSTRATION REFERENCE	APPLICABILITY AIRPLANE	APPLICABILITY ENGINE
CHECK/INSP	POTABLE WATER TANK SUPPORT FITTINGS		PASS	ALL

ZONES	ACCESS PANELS
166	

MECH	INSP	MPD ITEM NUMBER
		38-11-01-2A

VISUALLY CHECK THE POTABLE WATER TANK SHEAR PIN FOR DEFORMATION.

1. <u>Inspection of Shear Pin in the Right Main Tank Support Structure</u> (Fig. 201)

A. References

(1) AMM 25-52-01/401, Containerized Cargo Compartment Sidewall Lining

(2) AMM 38-11-02/401, Water Tank Shear Fitting

(3) AMM 52-36-00/001, Bulk Cargo Door

B. Access

(1) Location Zones
166 Area Aft of Bulk Cargo Compartment (Right)
811 Bulk Cargo Door

C. Procedure

(1) Open the bulk cargo door, 811 (AMM 52-36-00/001).

(2) Remove the aft bulkhead lining of the bulk cargo compartment (AMM 25-52-01/401).

(3) Do the steps that follow to make sure the shear pin is serviceable:

(a) Lightly push on the water tank and make sure the shear pin prevents movement of the water tank.

(b) Look at the structure around the shear pin for deformation or damage.

(4) If the shear pin is damaged, then replace these parts:

BOEING PROPRIETARY - Copyright (C) - Unpublished Work - See title page for details.

MECH	INSP

(a) The shear pin

(b) The shear pin fitting (AMM 38-11-02/401)

(c) The vertical support struts

(d) The horizontal anti-sway strut.

(5) Adjust the shear pin clearance as shown on Fig. 201.

NOTE: Adjust the suport struts to get the correct clearance.

WARNING: OBEY THE INSTRUCTIONS IN THE PROCEDURE TO INSTALL THE CARGO LINING. THE INCORRECT INSTALLATION OF THE CARGO LINING CAN LET THE FIRE EXTINGUISHING AGENT OR SMOKE OUT OF THE CARGO COMPARTMENT DURING A FIRE.

(6) Install the aft bulkhead lining of the bulk cargo compartment (AMM 25-52-01/401).

(7) Close the bulk cargo door, 811 (AMM 52-36-00/001).

BOEING PROPRIETARY - Copyright (C) - Unpublished Work - See title page for details.

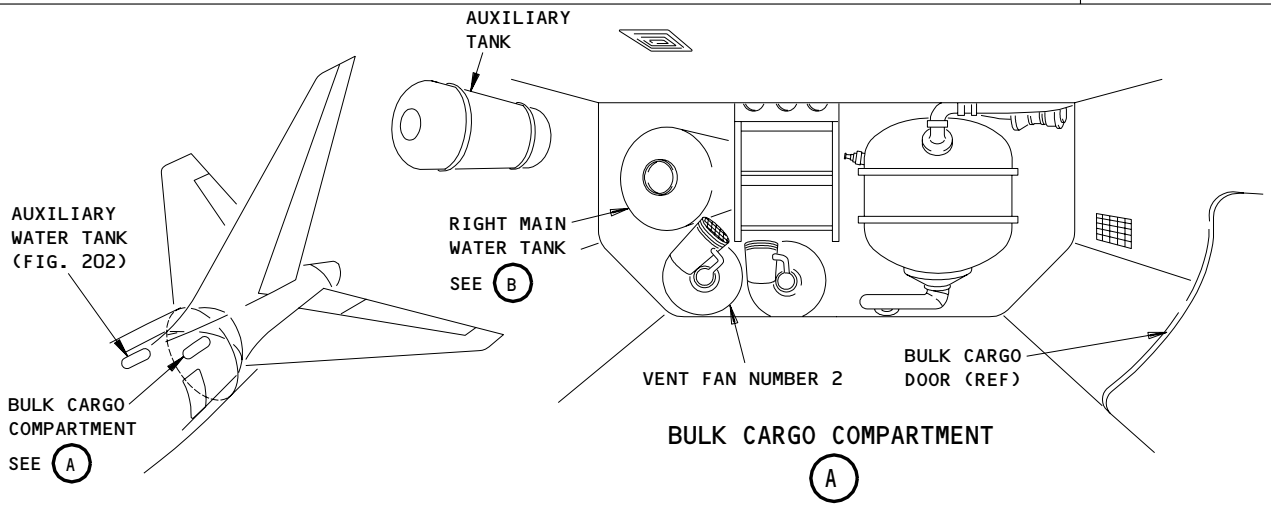

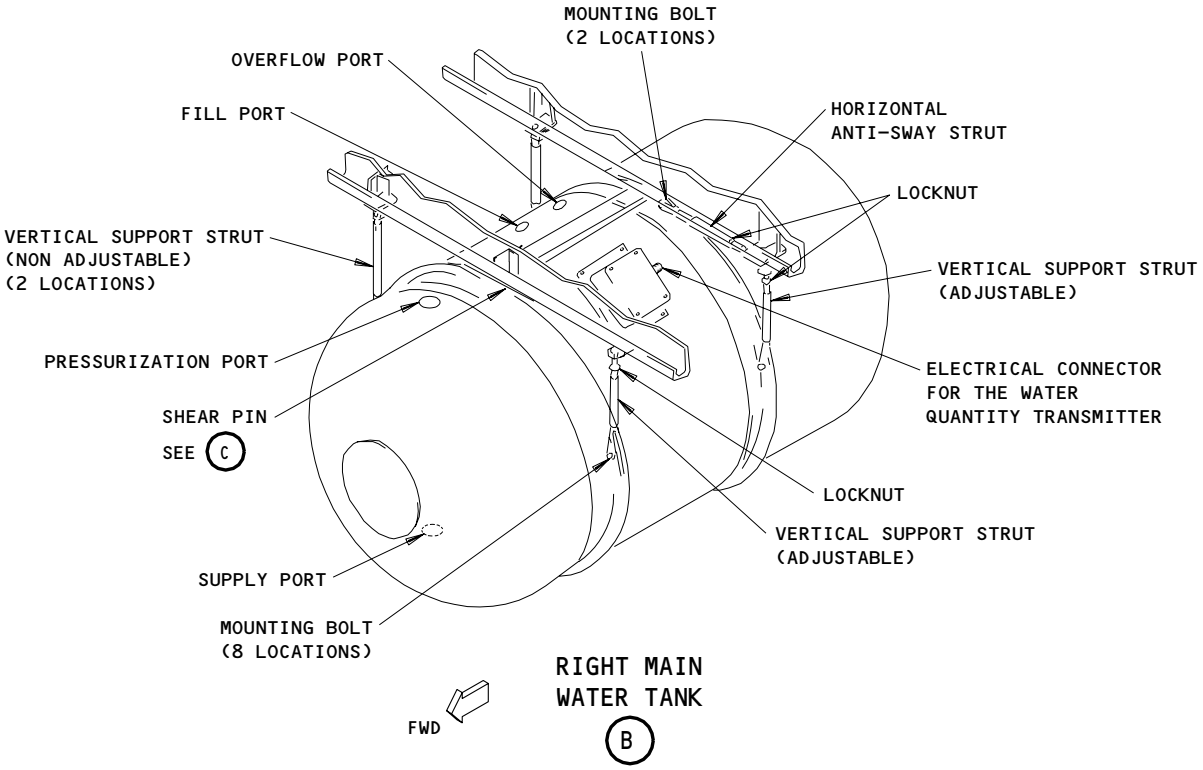

Potable Water Tank Installation
Figure 201 (Sheet 1)

BOEING PROPRIETARY - Copyright (C) - Unpublished Work - See title page for details.

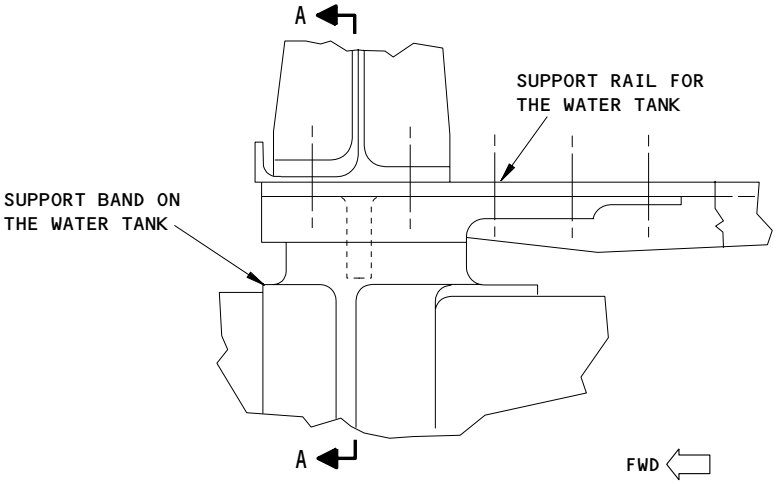

SHEAR PIN

C

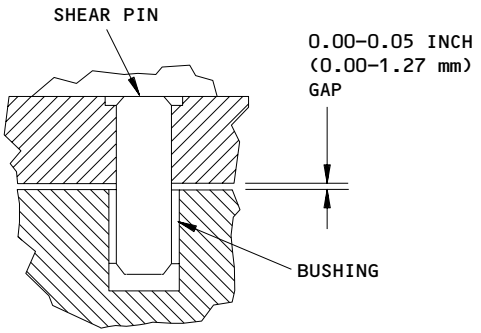

A-A

Potable Water Tank Installation
Figure 201 (Sheet 2)

BOEING PROPRIETARY - Copyright (C) - Unpublished Work - See title page for details.

STATION		BOEING CARD NO.
TAIL NO.	SAS BOEING 767 TASK CARD	38-013-01
DATE		AIRLINE CARD NO.

SKILL	WORK AREA	RELATED TASK	INTERVAL	PHASE	MPD REV	TASK CARD REVISION
AIRPL	AFT COMPT		4C	14848	011	APR 22/08

TASK	TITLE	STRUCTURAL ILLUSTRATION REFERENCE	APPLICABILITY AIRPLANE	APPLICABILITY ENGINE
RESTORE	WASTE TANK DRAIN VALVE SEALS		PASS	ALL

ZONES	ACCESS PANELS
165	163AL

MECH	INSP	MPD ITEM NUMBER
		38-32-03-4A

REPLACE (OFF-AIRCRAFT) THE WASTE TANK DRAIN VALVE SEALS PER VENDOR COMPONENT MAINTENANCE MANUAL.

THE FOLLOWING PROCEDURE APPLIES TO THE ON-AIRCRAFT PORTION OF THIS TASK (DRAIN VALVE REMOVAL/INSTALLATION):

1. Waste Drain Ball Valve Removal (Fig 401)

   A. References

      (1) AMM 12-17-01/301, Waste Tanks

      (2) AMM 25-52-01/401, Cargo Compartment Lining

      (3) AMM 38-32-00/201, Deactivate Vacuum Blower and Lav Flush System

   B. Prepare for the Removal

      (1) Do this task: Deactivate Vacuum Blower and Lav Flush System, AMM 38-32-00/201.

      (2) Do the task to service the waste system, AMM 12-17-01/301.

      NOTE: Do not add precharge.

      CAUTION: USE TOOLS CAREFULLY BECAUSE THE WASTE TANKS ARE A HONEYCOMB WITH A GRAPHITE COMPOSITE SKIN, WHICH IS EASILY DAMAGED. IF YOU HIT THE TANK WITH LOW ENERGY, THIS CAN CAUSE DAMAGE THAT YOU CANNOT SEE BEFORE A TANK FAILS. DO NOT HIT THE WASTE TANK, BECAUSE DAMAGE CAN OCCUR.

      (3) Open the bulk cargo door.

BOEING PROPRIETARY - Copyright (C) - Unpublished Work - See title page for details.

MECH | INSP

C. Procedure

(1) Remove the aft bulkhead lining of the bulk cargo compartment (AMM 25-52-01/401).

(2) For the forward drain ball valve (9), do this step:

(a) Remove the bolt (3), the washers (4), and the nut (5) that connects the adjustable rod (18) to the drain ball valve (9).

(3) For the aft drain ball valve (13), do these steps:

(a) Remove the bolt (23), the washer (24), and the nut (25), that attaches the drain valve actuator assembly rod end (26) to the actuation lever (12). Disconnect the actuation lever (12) from the drain valve actuator (10) assembly.

(b) Remove the bolt (17), the washer (16), the bushing (15), and the nut (14), that attaches the actuation lever (12) to the drain ball valve (13). Remove the actuation lever (12) assenbly from the drain valve.

(c) Remove the bolt (3), the washers (4), and the nut (5) that connects the adjustable rod (18) to the drain ball valve (13).

(4) Loosen the clam shells (8) and remove the drain line elbows (2, 7) that are between the drain ball valve (9 or 13) and the waste tank (6 or 1).

(5) Remove the V-band clamp (21) and seal (20) (gask-o-seal) between the drain ball valve and the Y-fitting (22).

(6) Remove the drain ball valve (9 or 13).

2. <u>Install the Waste Drain Ball Valve</u> (Fig. 401)

A. References

(1) AMM 12-17-01/301, Waste Tanks

(2) AMM 24-22-00/201, Manual Control

(3) AMM 25-52-01/401, Cargo Compartment Lining

(4) AMM 38-32-00/201, Activate Vacuum Blower and Lav Flush System

BOEING PROPRIETARY - Copyright (C) - Unpublished Work - See title page for details.

MECH	INSP

B. Procedure

CAUTION: USE TOOLS CAREFULLY BECAUSE THE WASTE TANKS ARE A HONEYCOMB WITH A GRAPHITE COMPOSITE SKIN, WHICH IS EASILY DAMAGED. IF YOU HIT THE TANK WITH LOW ENERGY, THIS CAN CAUSE DAMAGE THAT YOU CANNOT SEE BEFORE A TANK FAILS. DO NOT HIT THE WASTE TANK, BECAUSE DAMAGE CAN OCCUR.

(1) Put the drain ball valve (9 or 13) in its position with the Y-fitting. Use a new seal (20) (gask-o-seal).

(2) Install and tighten the V-bland clamp (21).

(3) Put the drain line elbows (2, 7) between the drain valve (9 or 13) and the waste tank (6 or 1). Use new packings (19) (O-rings).

(4) Tighten the clam shells (8) for the drain line elbows (2 and 7)

(5) Close the drain ball valves (9 and 13). Make sure that both the valves are in the full closed position.

NOTE: The valve (9 and 13) is fully closed when the lever on the valve is against its stop.

(6) At the waste tank service panel, push the waste tank drain valve(s) handle in to the stop.

(7) For the forward drain ball valve (9), do this step:

(a) If necessary, adjust the length of the adjustable rod (18) to align the bolt holes on the rod and the drain valve (9) lever. Install the bolt (3), the washer (4), and the nut (5) to connect the adjustable rod (18) to the drain valve (9) lever. If necessary, tighten the adjustable rod (18) clevis jam nut.

(8) For the aft drain ball valve (13), do these steps:

(a) If necessary, adjust the length of the adjustable rod (18) to align the bolt holes on the rod and the drain ball valve (13) lever. Install the bolt (3), the washer (4), and the nut (5) to connect the adjustable rod (18) to the drain valve (13). If necessary, tighten the adjustable rod (18) clevis jam nut.

BOEING PROPRIETARY - Copyright (C) - Unpublished Work - See title page for details.

MECH | INSP

(b) Install the bolt (17), the washer (16), the bushing (15), and the nut (14) to attach the actuation lever (12) assembly to the drain valve (13).

(c) If necessary, adjust the rod end (26) to align the rod end and the actuation lever (12) bolt holes. Install the bolt (23) the washer (24) and the nut (25) that connects the actuation lever (12) to the drain valve actuator(10) assembly.

C. Drain Ball Valve - Operational Test

(1) At the waste service panel, pull the tank drain valve handle out to the stop, then push the handle in to the stop. Make sure that the handle does not bind or stick.

(2) Pull the tank drain valve handle out to the stop.

(3) Do a visual check of the drain ball valves, and make sure that both the valves are in the full open position.

(4) Do a visual check of the drain ball valves, and make sure that both the valves are in the full closed position.

NOTE: The valve (9 and 13) is fully closed when the lever on the valve is against its stop.

(5) Close the waste tank service access panel door, 163AL. Make sure that the door closes completely. Make sure that the door does not touch the valve actuator (10) handle when the door is closed and latched.

(6) Do this task: Activate Vacuum Blower and Lav Flush System, AMM 38-32-00/201.

(7) Put water (50 gallons maximum) in the waste tank through the flush connection on the waste tank service panel (AMM 12-17-01/301).

(8) Make sure the drain ball valve and drain line connections do not have a leak.

D. Put the Airplane Back to its Usual Condition

BOEING PROPRIETARY - Copyright (C) - Unpublished Work - See title page for details.

MECH	INSP

WARNING: OBEY THE INSTRUCTIONS IN THE PROCEDURE TO INSTALL THE CARGO LINING. THE INCORRECT INSTALLATION OF THE CARGO LINING CAN LET THE FIRE EXTINGUISHING AGENT OR SMOKE OUT OF THE CARGO COMPARTMENT DURING A FIRE.

(1) Install the aft bulkhead lining and/or the floor panel of the bulk cargo compartment (AMM 25-52-01/401).

(2) Close the bulk cargo door.

(3) Do the task to service the waste system, AMM 12-17-01/301.

BOEING PROPRIETARY - Copyright (C) - Unpublished Work - See title page for details.

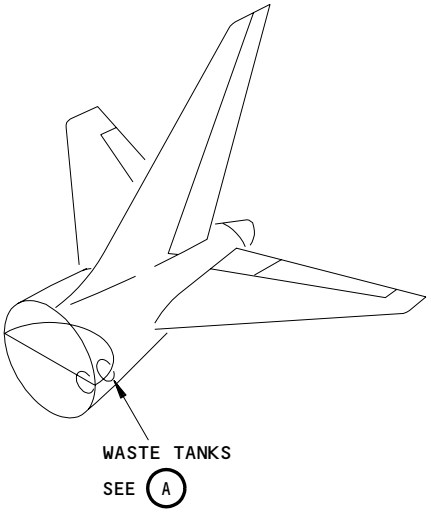

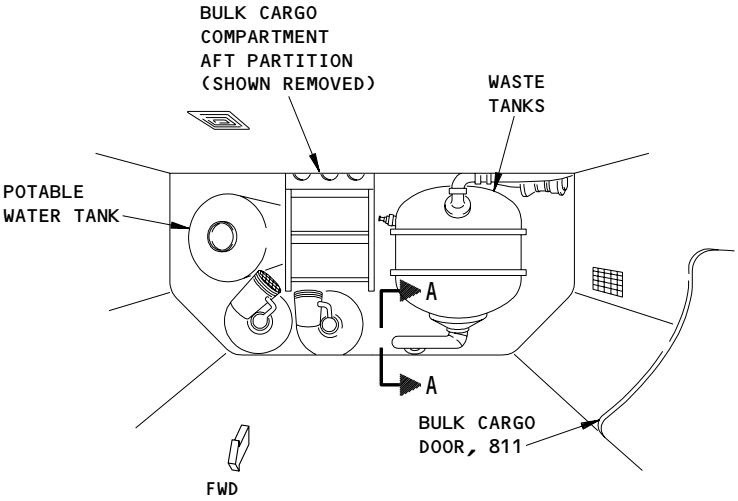

WASTE TANKS

A

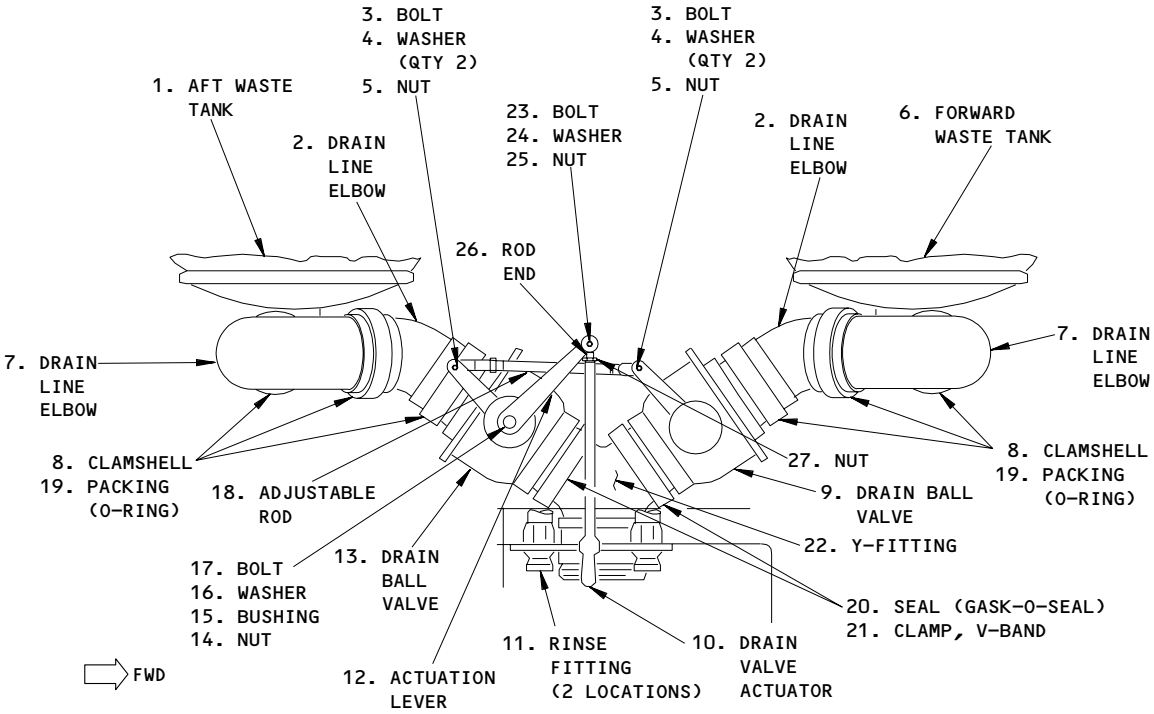

A-A

Waste Tank Drain Ball Valve Installation
Figure 401

BOEING PROPRIETARY - Copyright (C) - Unpublished Work - See title page for details.

STATION		BOEING CARD NO.
TAIL NO.	SAS BOEING 767 TASK CARD	38-014-01
DATE		AIRLINE CARD NO.

SKILL	WORK AREA	RELATED TASK	INTERVAL	PHASE	MPD REV	TASK CARD REVISION
AIRPL	AFT COMPT		4A	10404	011	APR 22/09

TASK	TITLE	STRUCTURAL ILLUSTRATION REFERENCE	APPLICABILITY AIRPLANE	APPLICABILITY ENGINE
CLEAN/INSP	WASTE TANK RINSE NOZZLES		PASS	ALL

ZONES	ACCESS PANELS
165	811

MECH	INSP	MPD ITEM NUMBER
		38-32-17-2A

CLEAN AND CHECK THE PERFORMANCE OF THE WASTE TANK RINSE NOZZLES.

USING THE PROCEDURES BELOW, FIRST REMOVE AND CLEAN THE RINSE NOZZLES, THEN REINSTALL THE RINSE NOZZLES AND PERFORM THE TEST TO CHECK THE RINSE NOZZLE PERFORMANCE.

1. <u>Remove the Rinse Nozzle Assembly</u>

   A. References

      (1) AMM 12-17-01/301, Waste Tanks

      (2) AMM 24-22-00/201, Remove and Supply Power

      (3) AMM 38-32-00/201, Deactivate Vaccum Blowers and Lav Flush System

      (4) AMM 38-32-00/201, Standard Procedures with Lav Waste and Equipment

      (5) AMM 52-36-00/001, Bulk Cargo Door

   B. Prepare to Remove the Rinse Nozzle Assembly

      (1) Do this task: Deactivate the Vacuum Blower and Lav Flush System, AMM 38-32-00/201.

      (2) Use the standard procedures for working with toilet waste and equipment (AMM 38-32-00/201).

      (3) Drain and flush the waste system (AMM 12-17-01/301).

BOEING PROPRIETARY - Copyright (C) - Unpublished Work - See title page for details.

MECH	INSP

CAUTION: USE TOOLS CAREFULLY BECAUSE THE WASTE TANKS ARE A HONEYCOMB WITH A GRAPHITE COMPOSITE SKIN, WHICH IS EASILY DAMAGED. IF YOU HIT THE TANK WITH LOW ENERGY, THIS CAN CAUSE DAMAGE THAT YOU CANNOT SEE BEFORE A TANK FAILS. DO NOT HIT THE WASTE TANK, BECAUSE DAMAGE CAN OCCUR.

(4) Open the bulk cargo door, 811 (AMM 52-36-00/001).

(5) To gain access to the waste tanks, remove the aft bulkhead lining or the waste tank enclosure panels of the bulk cargo compartment (AMM 25-52-01/401).

C. RINSE NOZZLE ATTACHED WITH V-BAND CLAMP;
Remove the Rinse Nozzle Assembly (Fig. 201)

(1) Disconnect the rinse line to the rinse nozzle assembly.

NOTE: There is one nozzle per tank. The nozzle is connected with an elbow.

(2) Remove the clamp that attaches the mounting flange of the drop-in nozzle assembly to the mounting fitting on the waste tank.

(3) Remove the drop-in rinse nozzle assembly from the waste tank.

(4) Remove the O-ring and discard.

2. Clean the Rinse Nozzle (Fig. 202)

A. Equipment

(1) Bristle Brush - Commercially Available

B. Consumable Materials

(1) Soap - Commercially Available

C. References

(1) AMM 38-32-00/201, Standard Procedures with Lav Waste and Equipment

D. Procedure

(1) Use the standard procedures for working with the toilet waste and equipment (AMM 38-32-00/201).

BOEING PROPRIETARY - Copyright (C) - Unpublished Work - See title page for details.

MECH	INSP

(2) Do this Task: TASK 38-32-17-002-001, Remove the Rinse Nozzle Assembly

(3) If necessary, the drop-in nozzle assembly may be disassembled.

(a) NOZZLE ATTACHED WITH V-BAND CLAMP (NON-ROTATING);
Some rinse nozzle assemblies have certain components bonded together. They can be identified by an adhesive bead located on the underside of the bonded rinse assembly.

NOTE: Do not attempt to disassemble this bonded type.

1) Further disassembly of the non-bonded type may be accomplished by removing the assembly nut from the assembly mounting flange and separating the washer, mounting flange and gasket from the rinse nozzle.

(b) NOZZLE ATTACHED WITH V-BAND CLAMP (ROTATING);
Further disassembly may be required if the rotating rinse nozzle will not rotate. Unscrew rotating rinse nozzle from rinse housing. These parts were assembled using Loctite 242 locking compound and therefore may be difficult to separate.

NOTE: Only perform this step if there is a malfunction with the rotating rinse nozzle.

1) Further disassembly may be accomplished by removing the assembly nut from the assembly mounting fitting and separating the washer, mounting fitting and gasket from the rinse housing.

(4) Remove the dirt from the rinse nozzle with a bristle brush and soap.

(5) Make sure the jets of the rinse nozzle are clean.

(6) Flush the rinse nozzle with clean water.

(7) If necessary, reassemble the drop-in rinse nozzle assembly.

(a) NOZZLE MOUNTED WITH V-BAND CLAMP;
Do these steps:

1) Install a new gasket between the mounting flange and the rinse nozzle.

BOEING PROPRIETARY - Copyright (C) - Unpublished Work - See title page for details.

MECH | INSP

CAUTION: DO NOT TIGHTEN THE RINSE NOZZLE ASSEMBLY NUT TOO MUCH. TOO MUCH TORQUE CAN CAUSE DAMAGE TO THE LOCATING PIN ON THE RINSE NOZZLE OR THE LOCATING PIN HOLE IN THE MOUNTING FLANGE.

2) Put the washer and the assembly nut on the rinse nozzle and tighten the assembly nut to 25-30 ft-lbs (34-40 Nm).

(8) Do this task: TASK 38-32-17-402-020, Install the Rinse Nozzle Assembly

(9) Do this Task: TASK 38-32-17-725-001 Rinse Nozzle - Test (AMM 38-32-17-5)

3. Install the Rinse Nozzle Assembly (Fig. 201)

A. Prepare for the installation.

CAUTION: USE TOOLS CAREFULLY BECAUSE THE WASTE TANKS ARE A HONEYCOMB WITH A GRAPHITE COMPOSITE SKIN, WHICH IS EASILY DAMAGED. IF YOU HIT THE TANK WITH LOW ENERGY, THIS CAN CAUSE DAMAGE THAT YOU CANNOT SEE BEFORE A TANK FAILS. DO NOT HIT THE WASTE TANK, BECAUSE DAMAGE CAN OCCUR.

(1) Use the standard procedures for working with the toilet waste and equipment (AMM 38-32-00/201).

B. NOZZLE ATTACHED WITH A V-BAND CLAMP;
Install the Rinse Nozzle Assembly (Fig. 201)

(1) Install a new O-ring on the mounting fitting.

(2) Put the drop-in rinse nozzle on the mounting fitting of the waste tank. Engage the index pins on the mounting fitting with the holes in the mounting flange.

NOTE: The arrow marked on the mounting flange must point to the top of the waste tank.

(3) Install the v-band clamp to attach the mounting flange of the drop-in nozzle assembly to the mounting fitting. Tighten the v-band clamp hex-nut to 40-50 in-lbs (4.5-5.6 Nm).

BOEING PROPRIETARY - Copyright (C) - Unpublished Work - See title page for details.

MECH | INSP

CAUTION: DO NOT TIGHTEN THE RINSE LINE NUT TOO MUCH. TOO MUCH TORQUE CAN DAMAGE TO THE LOCATING PINS ON THE MOUNTING FLANGE OR THE LOCATING PIN HOLES IN THE RINSE NOZZLE ASSEMBLY.

(4) Connect the rinse line elbow to the rinse nozzle. Tighten the swivel nut on the rinse line elbow to 40-50 in-lbs (4.5-5.6 Nm).

C. Rinse Nozzle Installation Test

(1) Do this task: Reactivate the Vacuum Blower and Lav Flush System, AMM 38-32-00/201.

(2) Do the servicing procedure for the waste system (AMM 12-17-01/301).

(3) Make sure that there are no leaks at the rinse line fitting, and at the waste tank connection, during the servicing step.

D. Put the Airplane Back to Its Usual Condition

WARNING: OBEY THE INSTRUCTIONS IN THE PROCEDURE TO INSTALL THE CARGO LINING. THE INCORRECT INSTALLATION OF THE CARGO LINING CAN LET THE FIRE EXTINGUISHING AGENT OR SMOKE OUT OF THE CARGO COMPARTMENT DURING A FIRE.

(1) Install the aft bulkhead lining or waste tank enclosure panel of the bulk cargo compartment (AMM 25-52-01/401).

(2) Close the bulk cargo door, 811 (AMM 52-36-00/001).

BOEING PROPRIETARY - Copyright (C) - Unpublished Work - See title page for details.

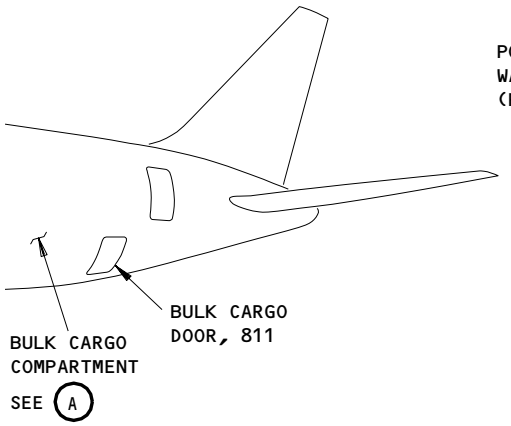

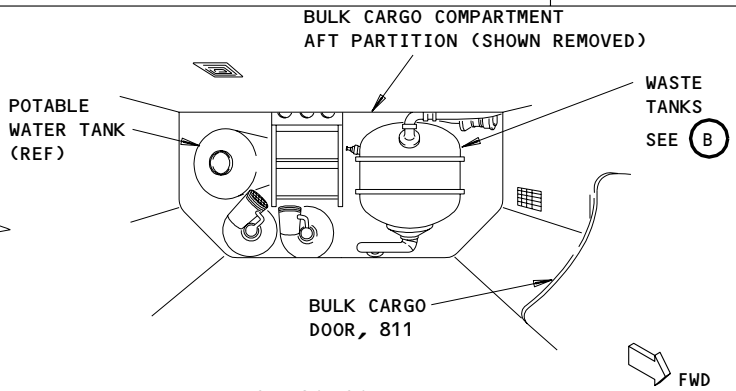

BULK CARGO COMPARTMENT

A

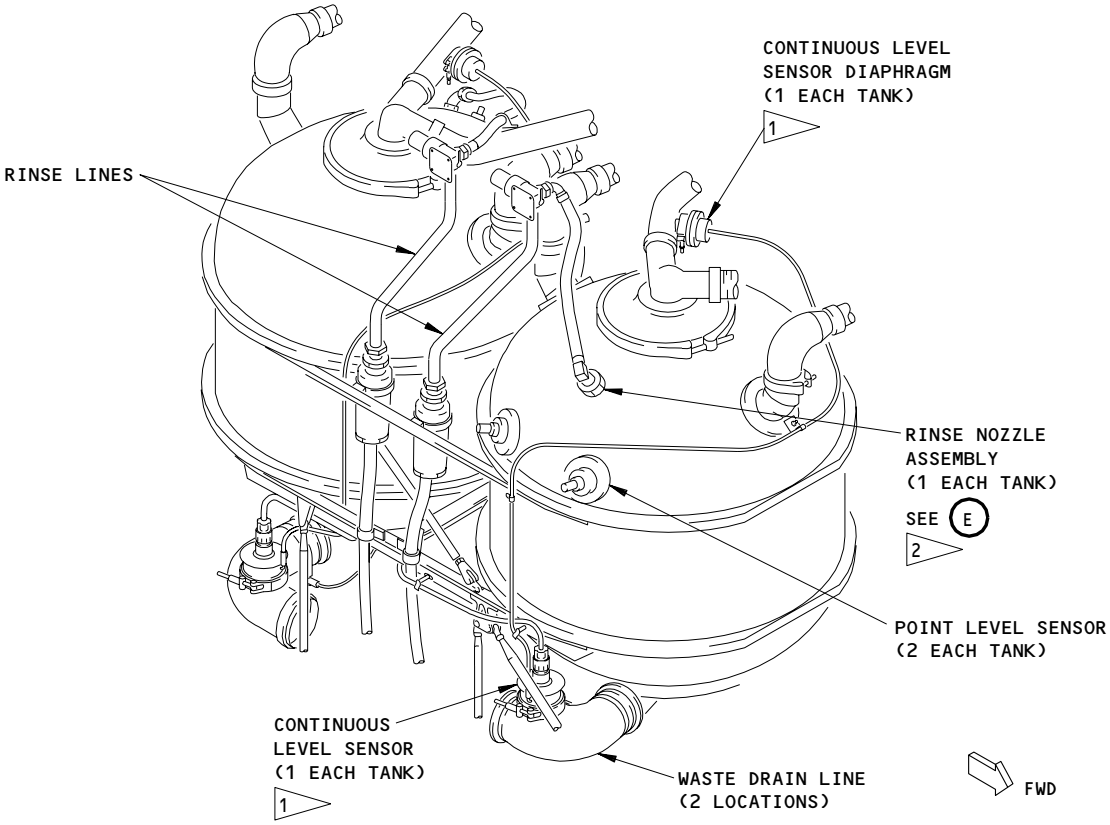

1 NOT ON ALL AIRPLANES

2 SOME TANKS HAVE TWO NOZZLES PER TANK

WASTE TANKS

B

Waste Tank Rinse Nozzle Installation
Figure 201 (Sheet 1)

BOEING PROPRIETARY - Copyright (C) - Unpublished Work - See title page for details.

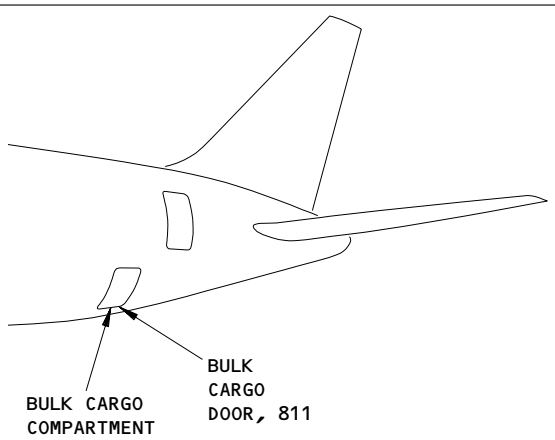

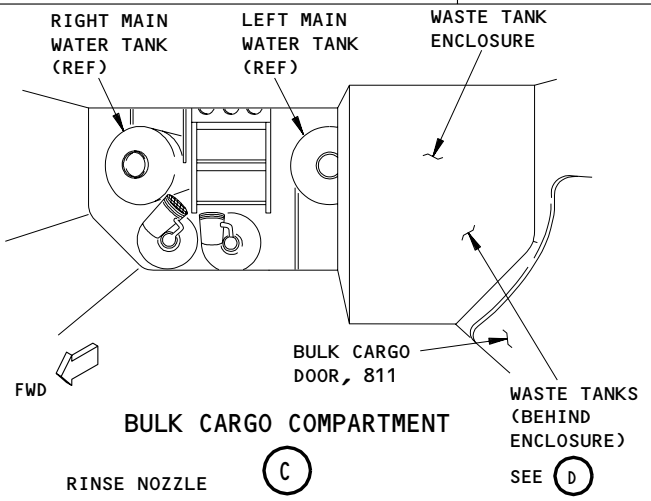

BULK CARGO COMPARTMENT

C

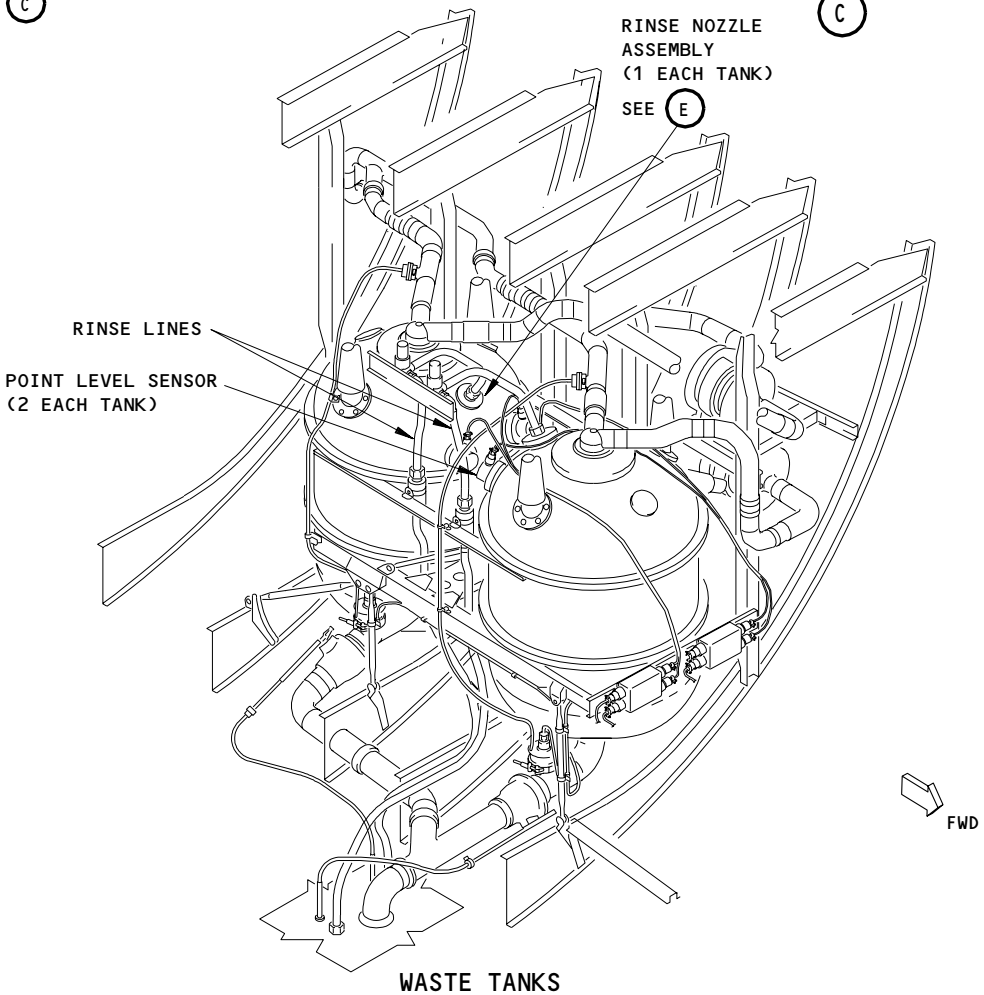

WASTE TANKS

D

Waste Tank Rinse Nozzle Installation
Figure 201 (Sheet 2)

BOEING PROPRIETARY - Copyright (C) - Unpublished Work - See title page for details.

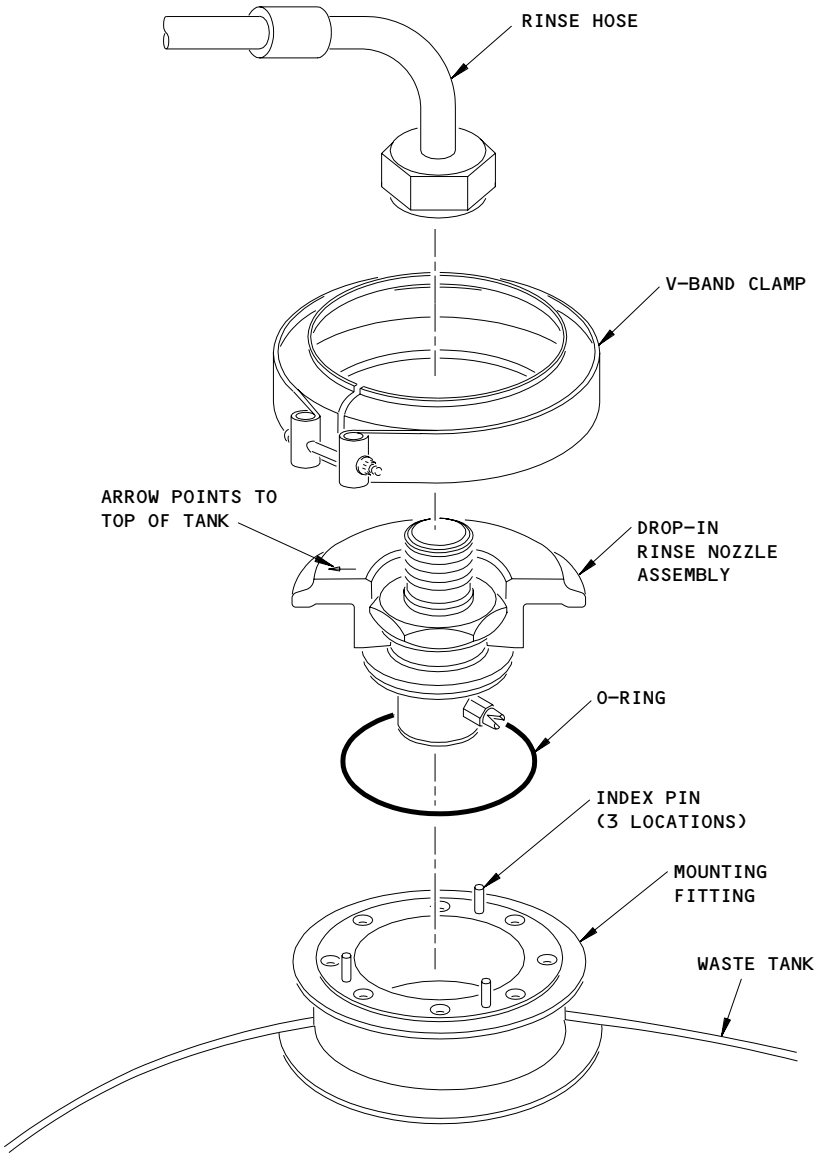

RINSE NOZZLE ASSEMBLY

E

Waste Tank Rinse Nozzle Installation
Figure 201 (Sheet 3)

BOEING PROPRIETARY - Copyright (C) - Unpublished Work - See title page for details.

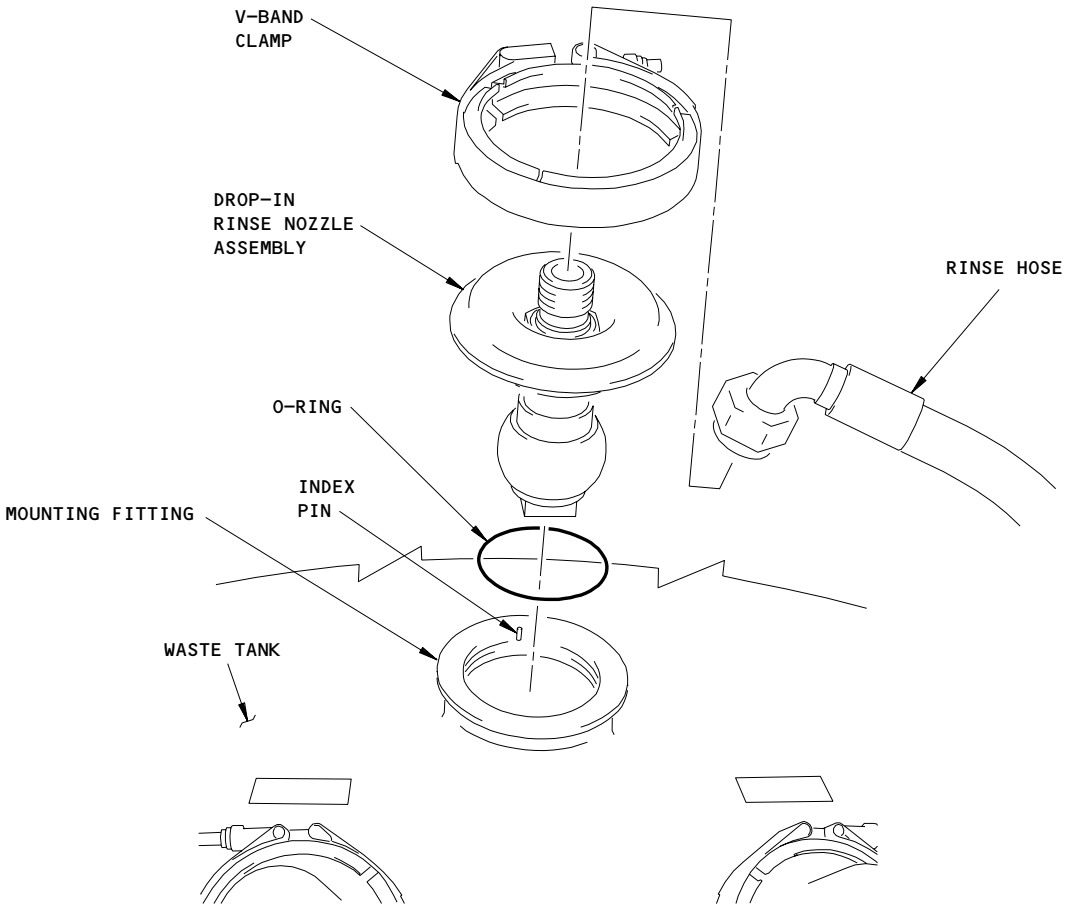

RINSE NOZZLE ASSEMBLY

E

Waste Tank Rinse Nozzle Installation
Figure 201 (Sheet 4)

BOEING PROPRIETARY - Copyright (C) - Unpublished Work - See title page for details.

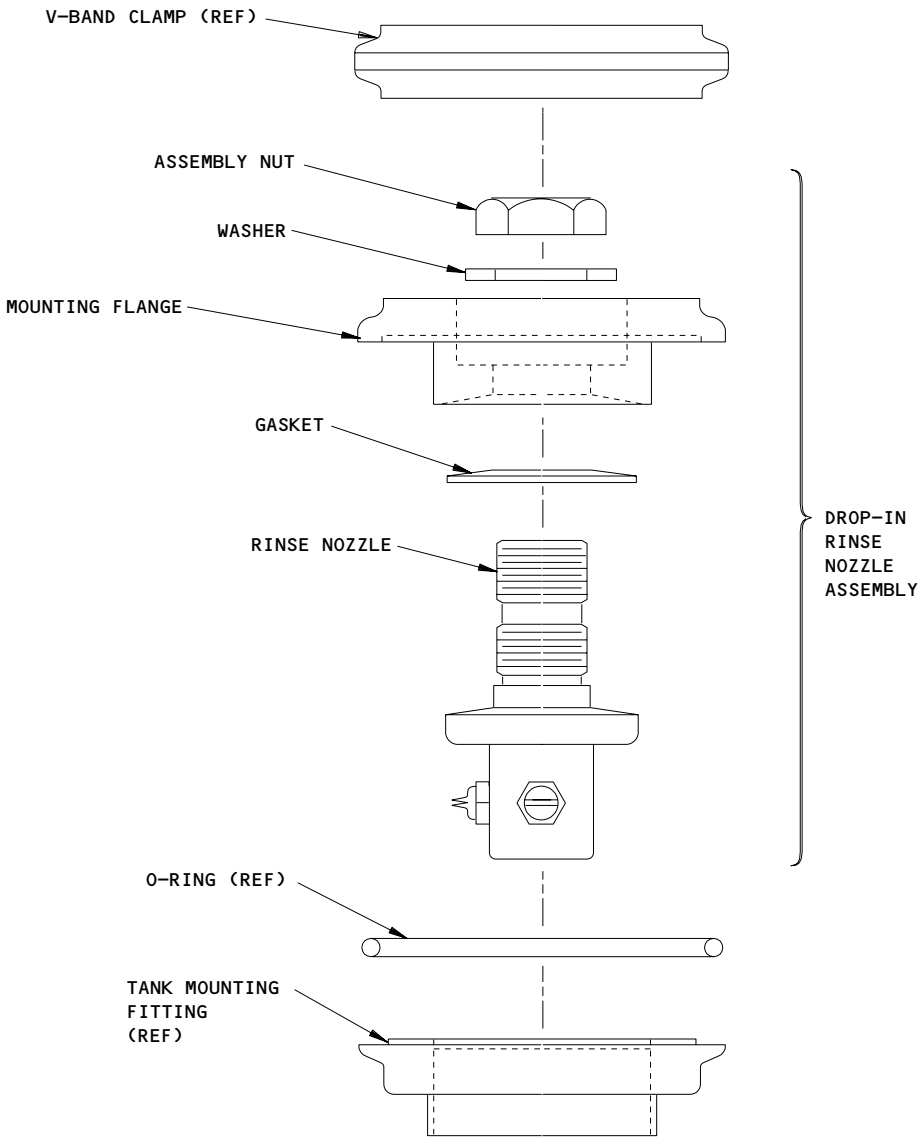

Rinse Nozzle Cleaning
Figure 202 (Sheet 1)

BOEING PROPRIETARY - Copyright (C) - Unpublished Work - See title page for details.

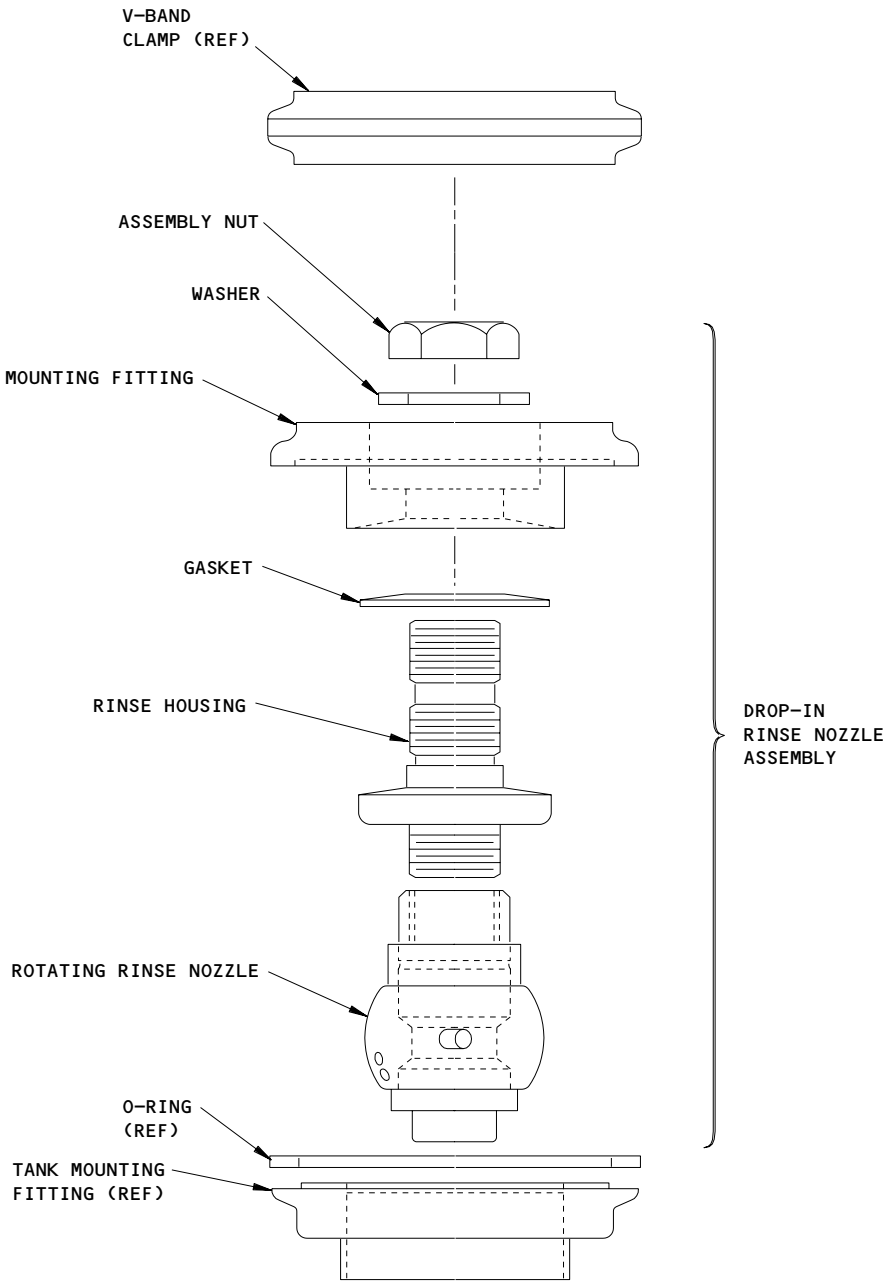

Rinse Nozzle Cleaning
Figure 202 (Sheet 2)

BOEING PROPRIETARY - Copyright (C) - Unpublished Work - See title page for details.

STATION		BOEING CARD NO.
TAIL NO.	SAS BOEING 767 TASK CARD	38-015-01
DATE		AIRLINE CARD NO.

SKILL	WORK AREA	RELATED TASK	INTERVAL	PHASE	MPD REV	TASK CARD REVISION
AIRPL	AFT COMPT		1C	11212	011	AUG 22/08

TASK	TITLE	STRUCTURAL ILLUSTRATION REFERENCE	APPLICABILITY AIRPLANE	APPLICABILITY ENGINE
REPLACE	WASTE TANK RINSE LINE FILTERS		PASS	ALL

ZONES	ACCESS PANELS
165	811

MECH	INSP	MPD ITEM NUMBER

REPLACE THE WASTE TANK RINSE LINE FILTERS. (SOME FILTERS MAYBE CLEANED AND ARE NOT REQUIRED TO BE REPLACED.) 38-32-18-2A

1. <u>Remove the Rinse Line Filter</u> (Fig. 201)

   A. References

      (1) AMM 12-17-01/301, Waste System Servicing

      (2) AMM 25-52-01/401, Cargo Compartment Lining

      (3) AMM 38-32-00/201, Deactivate Vaccum Blowers and Lav Flush System

      (4) AMM 52-36-00/001, Bulk Cargo Door

   B. Procedure

      (1) Do this task: Waste System Servicing (AMM 12-17-01/301).

          <u>NOTE</u>: Do not add the chemical precharge after you do the task to drain and flush the waste system.

      (2) Do this task: Deactivate the Vacuum Blower and Lav Flush System, AMM 38-32-00/201.

      (3) Open the bulk cargo door, 811 (AMM 52-36-00/001).

      (4) Remove the waste system enclosure lining of the bulk cargo compartment (AMM 25-52-01/401).

BOEING PROPRIETARY - Copyright (C) - Unpublished Work - See title page for details.

MECH	INSP

CAUTION: USE TOOLS CAREFULLY BECAUSE THE WASTE TANKS ARE A HONEYCOMB WITH A GRAPHITE COMPOSITE SKIN, WHICH IS EASILY DAMAGED. IF YOU HIT THE TANK WITH LOW ENERGY, THIS CAN CAUSE DAMAGE THAT YOU CANNOT SEE BEFORE A TANK FAILS. DO NOT HIT THE WASTE TANK, BECAUSE DAMAGE CAN OCCUR.

(5) Loosen the support clamp(s) of the rinse line filter assembly.

(6) Loosen the upper and lower hose from the rinse line filter assembly.

(a) Discard the packing.

2. Clean the Rinse Line Filter (Fig. 201)

A. General

B. Consumable Materials

(1) D00504 Grease, Petrolatum - VV-P-236

(2) B50099 Detergent, concentrated anionic (Alconox)

(3) B00541 Cleaner, General Purpose

C. Procedure

(1) Remove the filter element as follows.

(a) Remove the inlet connector and the spring from the filter housing.

(b) Remove the filter element from the filter housing.

(c) Remove the packings from the filter element and the inlet connector.

(2) Clean the filter element as follows:

(a) Soak the filter element, in a mild detergent solution. Use the General purpose cleaner or a liquid dishwashing detergent, Mix four fluid ounces (118 CC) detergent per one gallon (4 Liters) warm water.

(b) Reverse flow flush with warm tap water.

BOEING PROPRIETARY - Copyright (C) - Unpublished Work - See title page for details.

(c) Blow dry with low pressure air.

(d) Make sure the filter element is in servicable condition.

(3) Assemble the filter assembly as follows:

(a) Apply the grease to the packing and the threads of the inlet connector.

(b) Install new packings on the filter element and the inlet connector.

(c) Put the filter element in its position in the filter housing.

(d) Install the spring and the inlet connector in the filter housing.

3. Install the Rinse Line Filter (Fig. 201)

A. Consumable Materials

(1) D00504 Grease, Petrolatum - VV-P-236

B. Procedure

CAUTION: USE TOOLS CAREFULLY BECAUSE THE WASTE TANKS ARE A HONEYCOMB WITH A GRAPHITE COMPOSITE SKIN, WHICH IS EASILY DAMAGED. IF YOU HIT THE TANK WITH LOW ENERGY, THIS CAN CAUSE DAMAGE THAT YOU CANNOT SEE BEFORE A TANK FAILS. DO NOT HIT THE WASTE TANK, BECAUSE DAMAGE CAN OCCUR.

(1) Apply the grease to the new packing, the threads of rinse hose fittings, and the threads of the filter housing.

(2) Install the new packing on the upper (outlet) rinse hose fitting.

(3) Put the rinse line filter in its position in the support clamp(s) with the inlet port down.

(4) Connect the rinse lines to the two ends of the rinse line filter.

(5) Tighten the support clamp(s).

C. Waste Tank Rinse Filter Installation Test

BOEING PROPRIETARY - Copyright (C) - Unpublished Work - See title page for details.

MECH	INSP

(1) Open the cap on the rinse fitting assembly.

(2) Connect a rinse water hose from the service waste system servicing equipment to the rinse fitting assembly.

(3) Fill the waste tank with 30 gallons to 50 gallons of water.

(4) Examine the rinse filter and the connections for leakage.

D. Put the Airplane Back to its Usual Condition

(1) Do this task: Activate the Vacuum Blower and Lav Flush System, AMM 38-32-00/201.

WARNING: OBEY THE INSTRUCTIONS IN THE PROCEDURE TO INSTALL THE CARGO LINING. THE INCORRECT INSTALLATION OF THE CARGO LINING CAN LET THE FIRE EXTINGUISHING AGENT OR SMOKE OUT OF THE CARGO COMPARTMENT DURING A FIRE.

(2) Install the aft bulkhead lining in the bulk cargo compartment (AMM 25-52-01/401).

(3) Close the bulk cargo door, 811 (AMM 52-36-00/001).

BOEING PROPRIETARY - Copyright (C) - Unpublished Work - See title page for details.

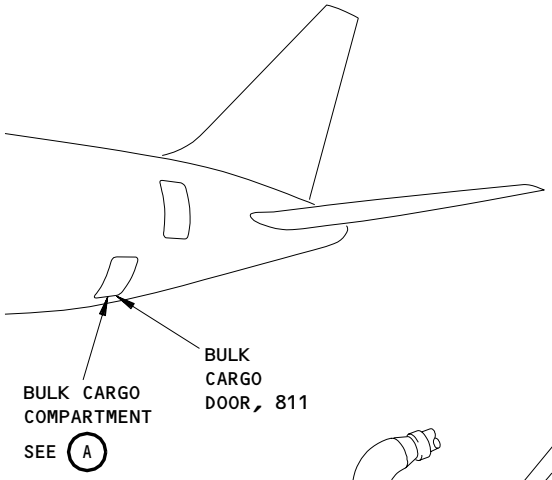

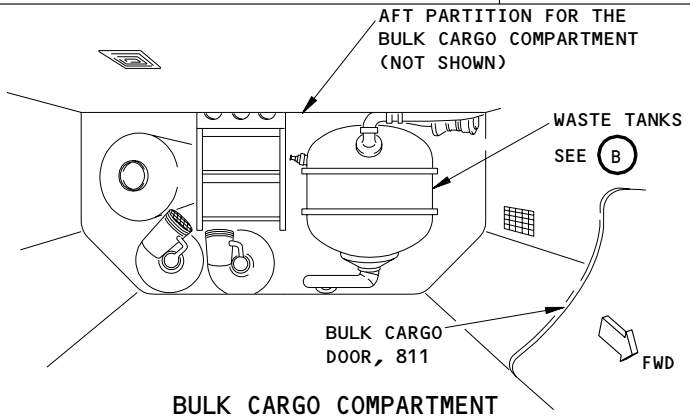

BULK CARGO COMPARTMENT

A

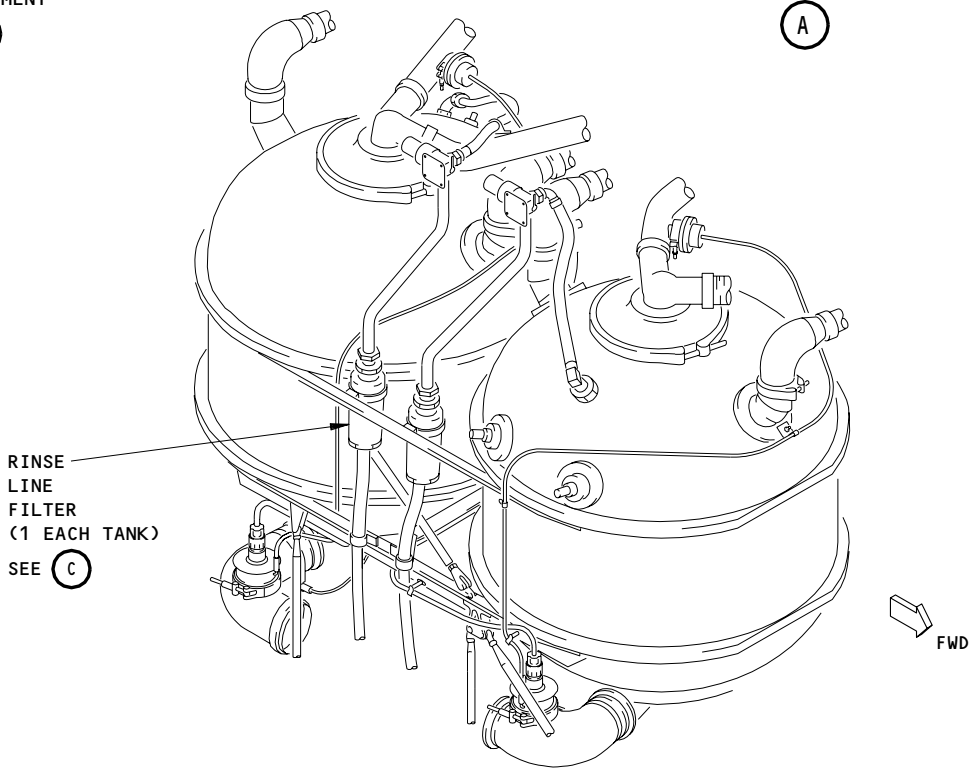

WASTE TANKS
(EXAMPLE)

B

Waste Tank Rinse Line Filter Installation
Figure 201 (Sheet 1)

BOEING PROPRIETARY - Copyright (C) - Unpublished Work - See title page for details.

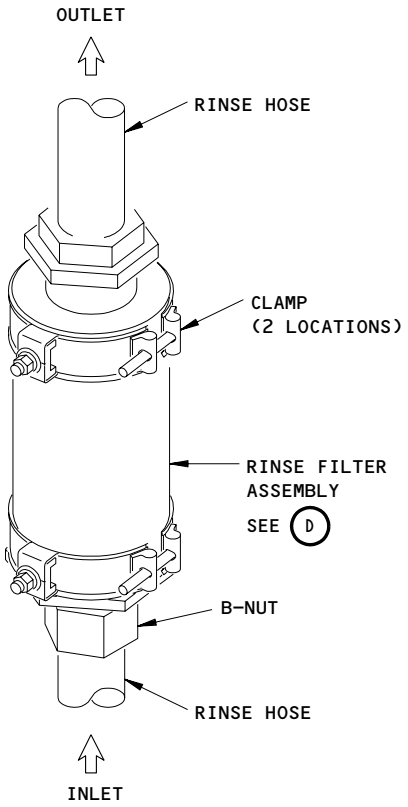

RINSE LINE FILTER

C

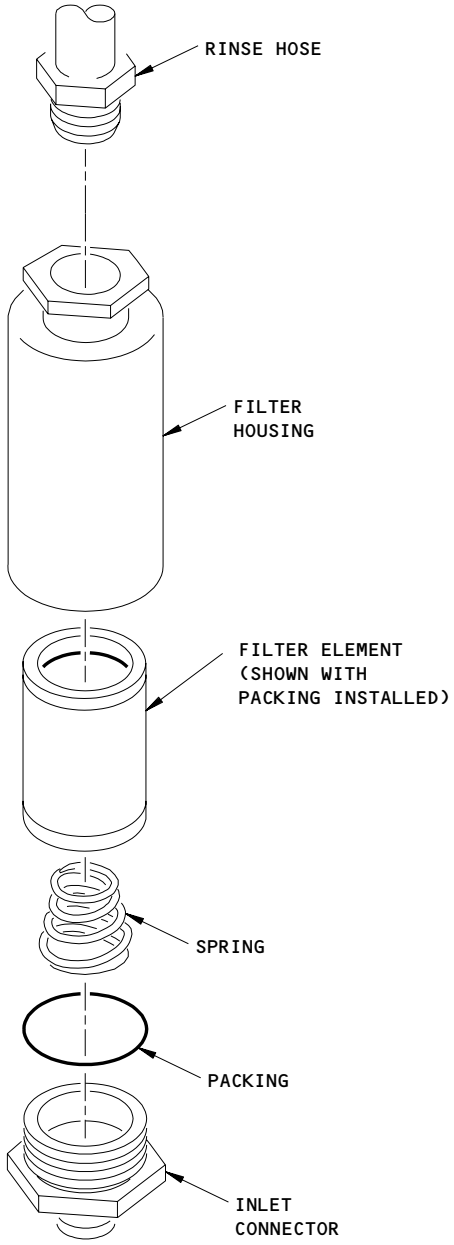

RINSE FILTER ASSEMBLY

D

Waste Tank Rinse Line Filter Installation
Figure 201 (Sheet 2)

BOEING PROPRIETARY - Copyright (C) - Unpublished Work - See title page for details.

STATION		BOEING CARD NO.
TAIL NO.	SAS BOEING 767 TASK CARD	38-016-01
DATE		AIRLINE CARD NO.

SKILL	WORK AREA	RELATED TASK	INTERVAL	PHASE	MPD REV	TASK CARD REVISION
AIRPL	AFT COMPT		1C	11212	011	APR 22/06

TASK	TITLE	STRUCTURAL ILLUSTRATION REFERENCE	APPLICABILITY AIRPLANE	APPLICABILITY ENGINE
OPERATIONAL	WASTE TANK DRAIN VALVES		PASS	ALL

ZONES	ACCESS PANELS
163 165	163AL 811

MECH	INSP	MPD ITEM NUMBER
		38-32-00-5D

PERFORM A LEAK TEST OF THE WASTE TANK DRAIN VALVE AND CAP ON THE WASTE DRAIN CONNECTION.

1. Waste Tank Rinse Line, Drain Line, Drain Valve and Drain Cap Outward Leakage Test (Fig. 501)

   A. Equipment

      (1) Toilet Waste Service Cart (service cart)

   B. References

      (1) AMM 12-17-01/301, Waste Tank

      (2) AMM 52-36-00/001, Bulk Cargo Door

      (3) AMM 52-49-00/001, External Service Door

      (4) AMM 25-52-01/401, Containerized Cargo Compartment Sidewall Linings

   C. Access

      (1) Location Zone
            163 Area Below Bulk Cargo Compartment (Left)
            165 Area Aft of Bulk Cargo Compartment, (Right)

      (2) Access Panel
            163AL Waste Tank Service Panel

   D. Prepare for the Test

      (1) OPEN these circuit breakers and then attach the DO-NOT-CLOSE tag:

         (a) On the overhead panel, P11,

BOEING PROPRIETARY - Copyright (C) - Unpublished Work - See title page for details.

1) 11R8, FLUSH CONT LAV SYS 1

2) 11R35, FLUSH CONT LAV SYS 2

(b) On the APU external power panel, P34,

1) 34N10, FLUSH CONT LAV SYS 1

2) 34N11, FLUSH CONT LAV SYS 2

WARNING: MAKE SURE THAT YOU WEAR CLOTHING AND EQUIPMENT THAT PROTECTS YOU FROM THE TOILET WASTE THAT CAN COME FROM THE SERVICE PANEL. A FAILURE OF THE DRAIN CAP CAN CAUSE THE CONTAMINATED WATER TO FLOW UNEXPECTEDLY FROM THE SERVICE PANEL.

CAUTION: USE TOOLS CAREFULLY BECAUSE THE WASTE TANKS ARE A HONEYCOMB WITH A GRAPHITE COMPOSITE SKIN, WHICH IS EASILY DAMAGED. IF YOU HIT THE TANK WITH LOW ENERGY, THIS CAN CAUSE DAMAGE THAT YOU CANNOT SEE BEFORE A TANK FAILS. DO NOT HIT THE WASTE TANK, BECAUSE DAMAGE CAN OCCUR.

(2) Drain and rinse the waste system (AMM 12-17-01/301).

(3) Open the bulk cargo door, 811 (AMM 52-36-00/001).

(4) Remove the aft bulkhead lining of the bulk cargo compartment (AMM 25-52-01/401).

E. Waste Tank Rinse Line, Drain Line and Drain Valve Outward Leakage Test

NOTE: This test gives the steps for one waste tank. Do the steps again for the other waste tank. When these tests have been completed, do the test for leakage from the cap for the waste drain outlet.

(1) Open the door to the service panel for the waste system, 163AL (AMM 52-49-00/001).

(2) Make sure that the drain valve handle is in the closed position.

BOEING PROPRIETARY - Copyright (C) - Unpublished Work - See title page for details.

MECH	INSP

(3) Make sure the cap for the waste drain outlet is closed.

NOTE: Make sure the expandable plug is installed if it is applicable.

(4) Connect the water hose from the service cart to the applicable flush connection on the service panel.

(5) Use the pump on the service cart to put 50 gallons (200 liters) of water into the waste tank.

NOTE: Use rinse water at a recommeded 30-50 psig (205-345 kPa) with a maximum of 80 psig (550 kPa).

NOTE: Keep the water in the waste tank to do the test for leakage around the cap of the waste drain outlet.

(6) Make sure there are no leaks at the hose connections in the flush line to the waste tank.

(7) Make sure that the connection for the drain line from the waste tank does not have a leak.

NOTE: You must wait for not less than 30 minutes after you put the water in the tank before you do this step.

(8) Open the cap (and expandable plug, if applicable) at the waste drain outlet.

(9) Make sure there was no leakage at the drain outlet when you opened the cap.

NOTE: The leakage at the waste drain outlet indicates the drain valve has a leak.

(10) AIRPLANES WITH PRECHARGE SHUTOFF VALVE;
To close the precharge shutoff valve, do this task:
Reactivate the Precharge Shutoff Valve, AMM 38-32-00/201.

BOEING PROPRIETARY - Copyright (C) - Unpublished Work - See title page for details.

MECH	INSP

F. Drain Cap Outward Leakage Test

NOTE: The cap for the waste drain outlet is referred to as the drain cap in this procedure. The drain cap is on the service panel.

(1) Close the drain cap (and install the expandable plug, if applicable).

(2) Pull the drain valve handle to the open position.

(3) After 30 minutes, make sure there is no leakage from the drain cap.

(4) Make sure there is no leakage from the drain cap at the waste drain outlet.

NOTE: The leakage from the drain cap indicates the seal on the drain cap is damaged.

(5) Remove the DO-NOT-CLOSE tag and CLOSE the following circuit breakers:

(a) On the overhead panel, P11,

1) 11R8, FLUSH CONT LAV SYS 1

2) 11R35, FLUSH CONT LAV SYS 2

(b) On the APU external power panel, P34,

1) 34N10, FLUSH CONT LAV SYS 1

2) 34N11, FLUSH CONT LAV SYS 2

G. Put the Airplane to Its Usual Condition.

(1) Disconnect the waste drain hose from the waste drain fitting.

(2) Drain and service the waste system (AMM 12-17-01/301).

(3) Install the aft bulkhead lining for the bulk cargo compartment (AMM 25-52-01/401).

(4) Close the bulk cargo door.

(5) Push the drain valve handle to close the drain valves.

BOEING PROPRIETARY - Copyright (C) - Unpublished Work - See title page for details.

MECH	INSP	
		(6) Close the door on the waste tank service panel.

BOEING PROPRIETARY - Copyright (C) - Unpublished Work - See title page for details.

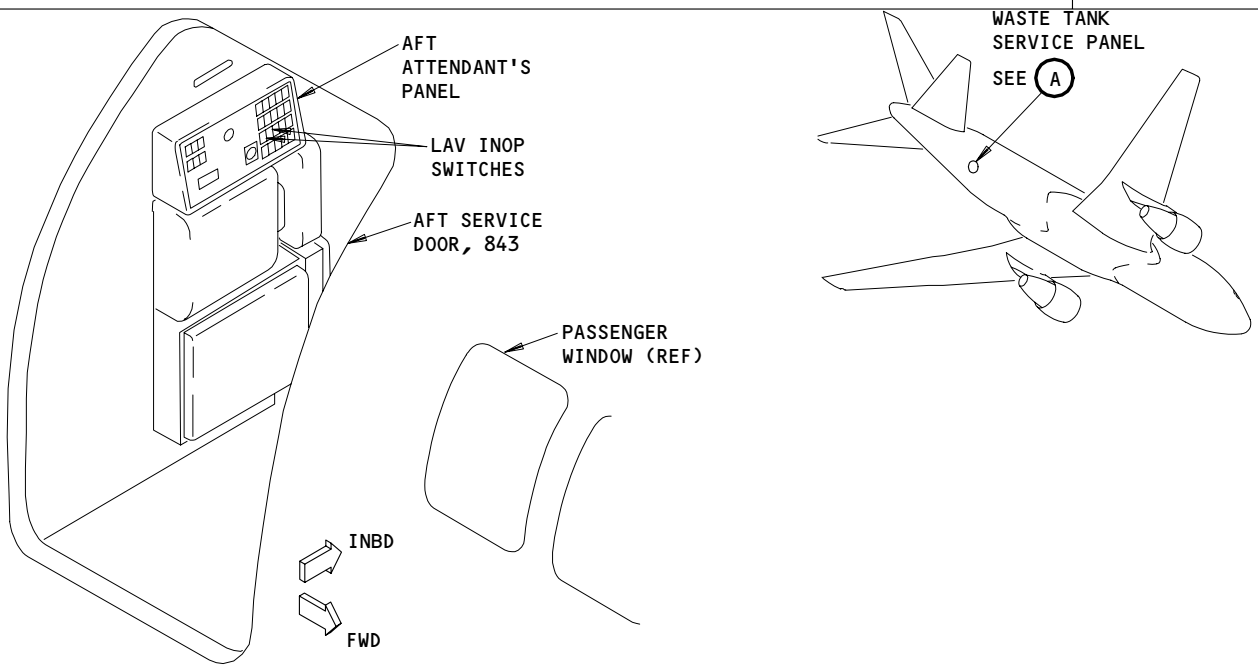

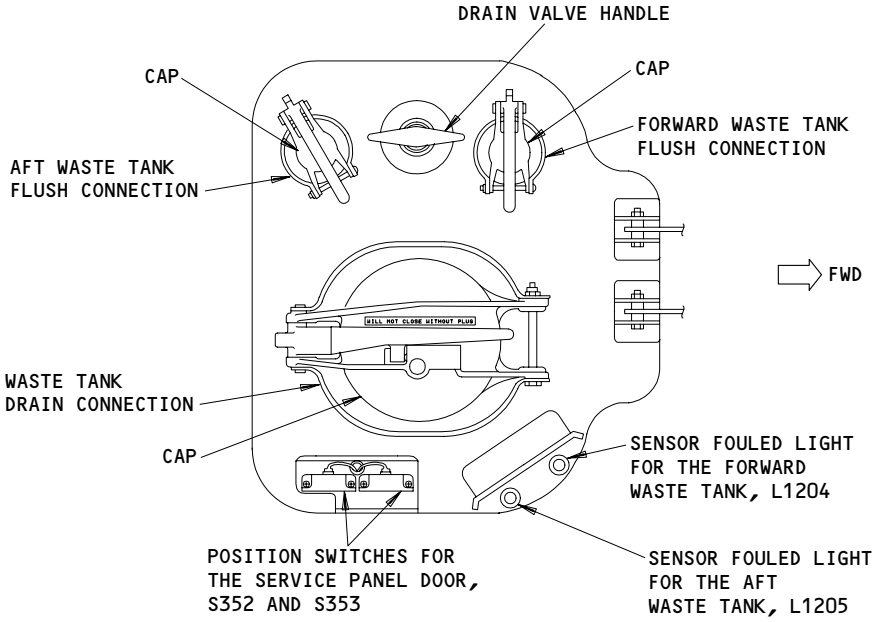

WASTE TANK SERVICE PANEL

A

Toilet System Test
Figure 501 (Sheet 1)

BOEING PROPRIETARY - Copyright (C) - Unpublished Work - See title page for details.

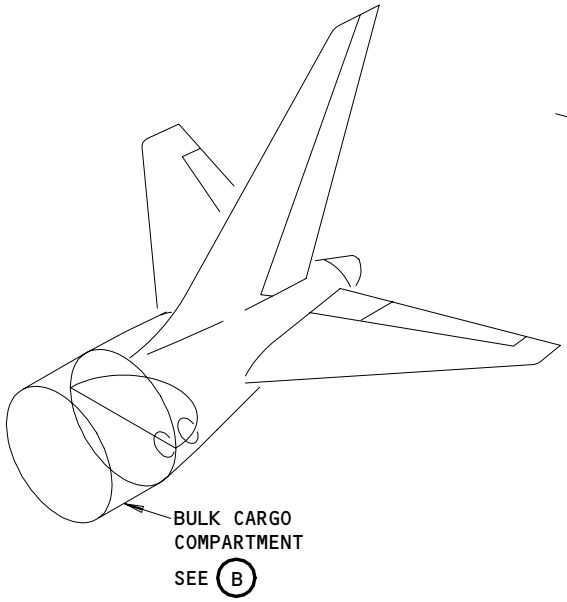

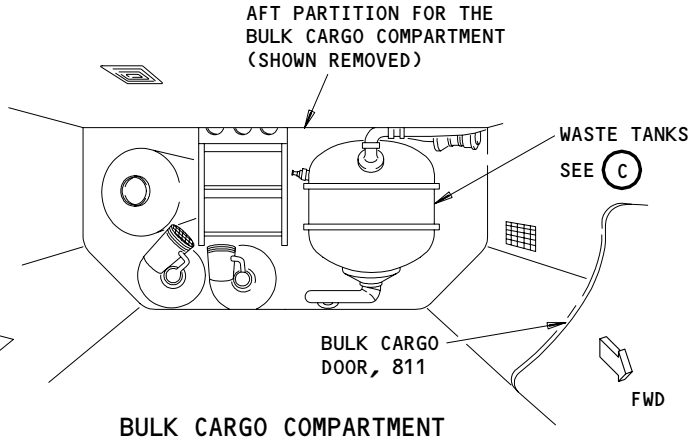

BULK CARGO COMPARTMENT

B

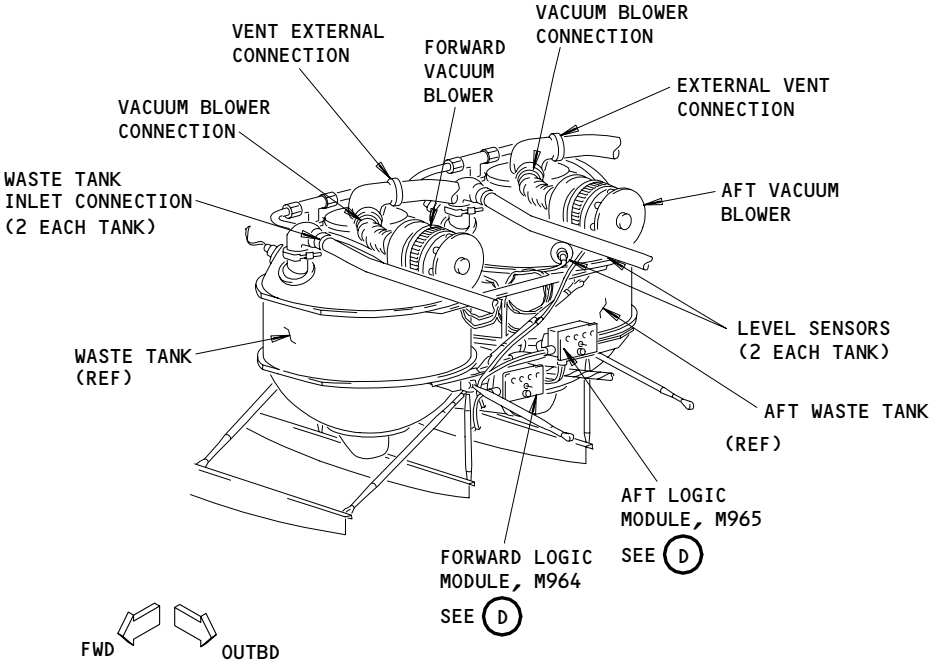

WASTE TANKS

C

Toilet System Test
Figure 501 (Sheet 2)

BOEING PROPRIETARY - Copyright (C) - Unpublished Work - See title page for details.