STATION		BOEING CARD NO.
TAIL NO.	SAS BOEING 767 TASK CARD	73-R03
DATE		AIRLINE CARD NO.

SKILL	WORK AREA	RELATED TASK	INTERVAL	PHASE	MPD REV	TASK CARD REVISION
ENGIN	ENGIN/STRUT				007	DEC 22/03

TASK	TITLE	STRUCTURAL ILLUSTRATION REFERENCE	APPLICABILITY AIRPLANE	APPLICABILITY ENGINE
REPLACE	ELECTRONIC ENGINE CONTROL (EEC)		ALL	4000

ZONES	ACCESS PANELS
410 420	414AR 424AR

MECH	INSP	MPD ITEM NUMBER

REPLACE THE ELECTRONIC ENGINE CONTROL (EEC). N73-21-04-4A

THIS CARD IS NOT A SCHEDULED MAINTENANCE TASK. IT IS A COMPONENT CHANGE CARD AND IT IS PROVIDED FOR OPERATOR CONVENIENCE DURING UNSCHEDULED MAINTENANCE ACTIVITIES. SEE APPENDIX A OF THE 767 MAINTENANCE PLANNING DATA (MPD) DOCUMENT,D622T001, FOR A DESCRIPTION OF THE COMPONENT CHANGE CARDS.

1. Remove the Electronic Engine Control (EEC) (Fig. 401)

   A. References

      (1) AMM 71-11-04/201, Fan Cowl Panels

   B. Prepare to Remove the Electronic Engine Control (EEC)

      (1) For the left engine, open this circuit breaker on the main power distribution panel P6 and attach a DO-NOT-CLOSE tag:

         (a) 6L19, PROBE HEAT L ENG

      (2) For the right engine, open this circuit breaker on the main power distribution panel P6 and attach a DO-NOT-CLOSE tag:

         (a) 6K25, PROBE HEAT R ENG

      (3) For the left engine, open these circuit breakers on the overhead panel P11 and attach DO-NOT-CLOSE tags:

         (a) 11A10, AIR DATA CMPTR L

         (b) 11L3, L ENGINE PERF SOL CHAN A

         (c) 11L4, L ENGINE PERF SOL CHAN B

BOEING PROPRIETARY - Copyright (C) - Unpublished Work - See title page for details.

(d) 11D17, LEFT ENGINE EEC DISCRETES

(4) For the right engine, open these circuit breakers on the overhead panel P11 and attach DO-NOT-CLOSE tags:

(a) 11F30, AIR DATA CMPTR R

(b) 11L30, R ENGINE PERF SOL CHAN A

(c) 11L31, R ENGINE PERF SOL CHAN B

(d) 11M32, RIGHT ENGINE EEC DISCRETES

(5) Set the applicable EEC Maint Power switch to the OFF/NORM position.

(6) Set the applicable fuel control switch to the CUTOFF position.

(7) Set the applicable start control switch to the OFF position.

(8) Open these circuit breakers with the steps that follow:

(a) For the left engine, open this circuit breaker on the overhead circuit breaker panel, P11, and attach the DO-NOT-CLOSE tag:

1) 11L7, L ENG EEC/SCU PWR

(b) For the right engine, open this circuit breaker on the overhead circuit breaker panel, P11, and attach the DO-NOT-CLOSE tag:

1) 11K28, R ENG EEC/SCU PWR

(9) Open this circuit breaker on the overhead panel P11 and attach a DO-NOT-CLOSE tag:

(a) 11B36, APU ENG START/ECS DISCRETES

(10) Open the right fan cowl panel (AMM 71-11-04/201).

C. Procedure

(1) Remove the Electronic Engine Control (EEC):

<u>CAUTION</u>: DO NOT REMOVE THE EEC PROGRAMMING PLUG FROM THE ENGINE WHEN YOU REMOVE THE EEC. THE PROGRAMMING PLUG MUST STAY ON THE ENGINE TO KEEP THE CORRECT THRUST RATING.

BOEING PROPRIETARY - Copyright (C) - Unpublished Work - See title page for details.

(a) Disconnect the EEC programming plug (1) from the EEC (2) but do not remove the EEC programming plug from the engine.

1) Install covers on the EEC programming plug (1) and on the EEC (2).

(b) Disconnect the electrical connectors (3, 4, 5, 6, 20, 22, 23 and 24) from the EEC (2).

1) Install covers on all the electrical connectors and on the EEC (2).

(c) Disconnect the flex hoses (12, 13, 14 and 15) from the bottom of the EEC (2).

(d) Remove the bolt (25) to disconnect the ground strap (26) from the EEC (2).

(e) Remove the bolts (21) and shock mounts (7) that attach the EEC (2) to the engine.

1) Remove the EEC (2) from the engine.

(2) If it is necessary to replace the EEC, do the steps that follow:

(a) Remove the adapters (10, 11, 16 and 18) from the flex hose connections on the EEC (2).

(b) Remove the packings (8, 9, 17 and 19) from the adapters (10, 11, 16 and 18).

1) Discard the packings (8, 9, 17 and 19).

(3) Install covers over the flex hose connections on the EEC (2).

2. <u>Install the Electronic Engine Control (EEC)</u> (Fig. 401)

A. Equipment

(1) D00137 Engine Oil - PWA 521

(2) G02334 Lockwire, (P05-289) 0.032 inch (0.813 mm) - AS3214-02

(3) G02335 Cable, Safety (P05-291)

(4) G02332 Ferrule, Safety Cable (P05-292)

BOEING PROPRIETARY - Copyright (C) - Unpublished Work - See title page for details.

MECH | INSP

B. Parts

AMM			AIPC		
FIG	ITEM	NOMENCLATURE	SUBJECT	FIG	ITEM
401	2	Electronic Engine Control	73-21-04	05	80
	8	Packing			10
	9	Packing			20
	18	Packing			30
	19	Packing			40

C. References

(1) AMM 70-24-05/201, Electrical Harnesses

(2) AMM 71-00-00/501, Power Plant

(3) AMM 71-11-04/201, Fan Cowl Panels

D. Procedure

WARNING: INSTALLATION OF A P/N 791100-14-102 EEC IS NOT ALLOWED ON AN AIRPLANE THAT HAS RING CASE CONFIGURATION ENGINES INSTALLED. IF YOU DO YOU CAN CAUSE INJURY TO PERSONNEL OR DAMAGE TO THE AIRPLANE.

(1) Make sure you have the correct EEC part number for the engine model number shown on the engine data plate.

NOTE: Engines with the Phase 3 engine changes or Phase 3 fan blade changes must use the correct EEC part number. Engine models PW4OXX(-3), PW4OXX(-1C), or PW4OXX(-3B) must have EEC part numbers 52D335 or subsequent. A hung start will occur if you use the incorrect EEC part number.

NOTE: Installation of a P/N 791100-14-102 (P&W P/N 54D043) EEC (EEC software version SCN 11B/AM - CUTBACK STATOR SOFTWARE) is not allowed on an airplane that has ring case configuration engines (Post SB PW4ENG 72-755 or production equivalent) installed.

BOEING PROPRIETARY - Copyright (C) - Unpublished Work - See title page for details.

(2) Remove the covers from the EEC (2) and the electrical connectors (3, 4, 5, 6, 20, 22, 23 and 24).

CAUTION: DO NOT LUBRICATE THE HOSE ADAPTERS OR PACKINGS. IF YOU LUBRICATE THE ADAPTERS OR PACKINGS, THE LUBRICANT CAN CAUSE CONTAMINATION OF THE EEC.

CAUTION: EXAMINE THE ENGINE FAN CASE AT APPROXIMATELY THE ONE O'CLOCK POSITION FOR A FADEC CAUTION LABEL. THIS LABEL SHOWS THAT A UNIQUE MOUNTING EEC IS NECESSARY BECAUSE CUTBACK HPC STATORS (POST-PW-SB 72-706) ARE INSTALLED IN THE ENGINE. MAKE SURE THE CORRECT EEC IS INSTALLED.

(3) If it is necessary to replace the EEC (2), do the steps that follow:

(a) Install the packings (8, 9, 18 and 19) on the adapters (10, 11, 16 and 17).

(b) Install the adapters (10, 11, 16 and 17) in the ports marked P2, PAMB, PB, and P5.

(c) Tighten the adapters (10, 11, 16 and 17):

1) Tighten the adapter (10) in the P2 port to 65-75 pound-inches (7.3-8.5 newton-meters).

2) Tighten the adapter (11) in the PAMB port to 90-100 pound-inches (10.2-11.3 newton-meters).

3) Tighten the adapter (16) in the PB port to 110-120 pound-inches (12.4-13.6 newton-meters).

4) Tighten the adapter (17) in the P5 port to 150-170 pound-inches (16.9-19.2 newton-meters).

(4) Install the Electronic Engine Control (EEC):

(a) Put the EEC (2) on the mounting bracket on the fan case at the 2 o'clock position with the pressure ports pointed down.

(b) Lubricate the threads of the bolts (21) with engine oil.

(c) Attach the EEC (2) to the engine with the bolts (21) and shock mounts (7).

BOEING PROPRIETARY - Copyright (C) - Unpublished Work - See title page for details.

MECH	INSP

1) Tighten the bolts (21) to 150-170 pound-inches (16.9-19.2 newton-meters).

CAUTION: DO NOT USE LUBRICANTS ON THE FLEX HOSES, ADAPTERS, OR PACKINGS. THE USE OF LUBRICANTS IN THESE LOCATIONS CAN CAUSE CONTAMINATION OF THE EEC.

CAUTION: HOLD THE WRENCH FLATS FOR THE EEC ADAPTERS WHEN YOU TORQUE THE HOSE NUTS. THIS WILL PREVENT DAMAGE TO THE THREADS IN THE EEC.

(d) Install the flex hoses (12, 13, 14 and 15) on the EEC (2):

1) Install the PB flex hose nut (14) to the adapter (16).

a) Tighten the PB flex hose nut (14) to 270-300 pound-inches (30.5-33.9 newton-meters).

2) Install the P5 flex hose nut (15) to the adapter (17).

a) Tighten the P5 flex hose nut (15) to 450-500 pound-inches (50.8-56.5 newton-meters).

3) Install the PAMB flex hose nut (13) to the adapter (11).

a) Tighten the PAMB flex hose nut (13) to 135-150 pound-inches (15.2-16.9 newton-meters).

4) Install the P2 flex hose nut (12) to the adapter (10).

a) Tighten the P2 flex hose nut (12) to 90-100 pound-inches (10.2-11.3 newton-meters).

CAUTION: MAKE SURE THAT THE LUGS ON THE GROUND CABLE ARE TIGHTLY ATTACHED TO THE GROUND CABLE. MAKE SURE THAT THE CABLE IS NOT MORE THAN 25 PERCENT BROKEN. IF THE LUGS ARE LOOSE OR THE CABLE IS BADLY BROKEN, LIGHTNING PROTECTION WILL NOT BE SUFFICIENT.

(e) Install the ground cable:

1) Put the lug for the ground cable (26) on the upper aft side of the EEC (2).

BOEING PROPRIETARY - Copyright (C) - Unpublished Work - See title page for details.

2) Lubricate the bolt (25) with engine oil.

3) Attach the ground cable (26) to the EEC (2) with the bolt (25).

a) Tighten the bolt (25) to 75-85 pound-inches (8.5-9.6 newton-meters).

CAUTION: USE THE CORRECT ASSEMBLY PROCEDURE, AND TOOLS, FOR THE HARNESS CONNECTOR INSTALLATION (AMM 70-24-05/201). IF YOU USE THE INCORRECT ASSEMBLY PROCEDURE, OR TOOLS, A DAMAGED OR LOOSE CONNECTOR CAN OCCUR. A LOOSE CONNECTOR PERMITS VIBRATION, WHICH CAUSES THE CONTACTS TO WEAR AND DECREASES THE LIGHTNING PROTECTION.

(f) Connect the electrical connectors (3, 4, 5, 6, 20, 22, 23 and 24) to the applicable connectors on the EEC (2) (AMM 70-24-05/201).

CAUTION: MAKE SURE THE WIRE HARNESSES AT THE FORWARD AND AFT END OF THE EEC DO NOT EXTEND OUT OF THE OUTER SURFACE OF THE EEC. IF THE WIRE HARNESSES EXTEND OUT OF THE OUTER SURFACE OF THE EEC, THEY CAN TOUCH THE FAN COWL PANEL AND GET DAMAGED.

(g) Make sure the wire harnesses do not extend out of the outer surfaces of the EEC (2).

CAUTION: USE THE CORRECT ASSEMBLY PROCEDURE, AND TOOLS, FOR THE PROGRAMMING PLUG INSTALLATION (AMM 70-24-05/201). IF YOU USE THE INCORRECT ASSEMBLY PROCEDURE, OR TOOLS, A DAMAGED OR LOOSE PROGRAMMING PLUG CAN OCCUR. A LOOSE PROGRAMMING PLUG PERMITS VIBRATION, WHICH CAUSES THE CONTACTS TO WEAR AND DECREASES THE LIGHTNING PROTECTION.

(h) Install the programming plug (1) to the connector on the upper left side of the EEC (2) (AMM 70-24-05/201).

E. Return the Aircraft to its Usual Condition

(1) Close the right fan cowl panel (AMM 71-11-04/201).

BOEING PROPRIETARY - Copyright (C) - Unpublished Work - See title page for details.

(2) For the left engine, remove the DO-NOT-CLOSE tag and close this circuit breaker on the main power disribution panel P6:

(a) 6L19, PROBE HEAT L ENG

(3) For the right engine, remove the DO-NOT-CLOSE tag and close this circuit breaker on the main power disribution panel P6:

(a) 6K25, PROBE HEAT R ENG

(4) Remove the DO-NOT-CLOSE tag and close this circuit breaker on the overhead panel P11:

(a) 11B36, APU ENG START/ECS DISCRETES

(5) Close these circuit breakers with the steps that follow:

(a) For the left engine, remove the DO-NOT-CLOSE tag and close this circuit breaker on the P11 panel:

1) 11L7, L ENG EEC/SCU PWR

(b) For the right engine, remove the DO-NOT-CLOSE tag and close this circuit breaker on the P11 panel:

1) 11K28, R ENG EEC/SCU PWR

(6) For the left engine, remove the DO-NOT-CLOSE tags and close these circuit breakers on the overhead panel P11:

(a) 11A10, AIR DATA CMPTR L

(b) 11L3, L ENGINE PERF SOL CHAN A

(c) 11L4, L ENGINE PERF SOL CHAN B

(d) 11D17, LEFT ENGINE EEC DISCRETES

(7) For the right engine, remove the DO-NOT-CLOSE tags and close these circuit breakers on the overhead panel P11:

(a) 11F30, AIR DATA CMPTR R

(b) 11L30, R ENGINE PERF SOL CHAN A

(c) 11L31, R ENGINE PERF SOL CHAN B

BOEING PROPRIETARY - Copyright (C) - Unpublished Work - See title page for details.

MECH	INSP

(d) 11M32, RIGHT ENGINE EEC DISCRETES

(8) Move the EEC MAINT L(R) ENG POWER switch on the right side panel P61 to the TEST position.

(9) Wait for five seconds.

(10) Move the EEC MAINT L (R) ENG POWER switch to the NORM position.

(11) Do the test of the Electronic Engine Control (EEC) that is shown in the Power Plant Test Reference Table (AMM 71-00-00/501).

BOEING PROPRIETARY - Copyright (C) - Unpublished Work - See title page for details.

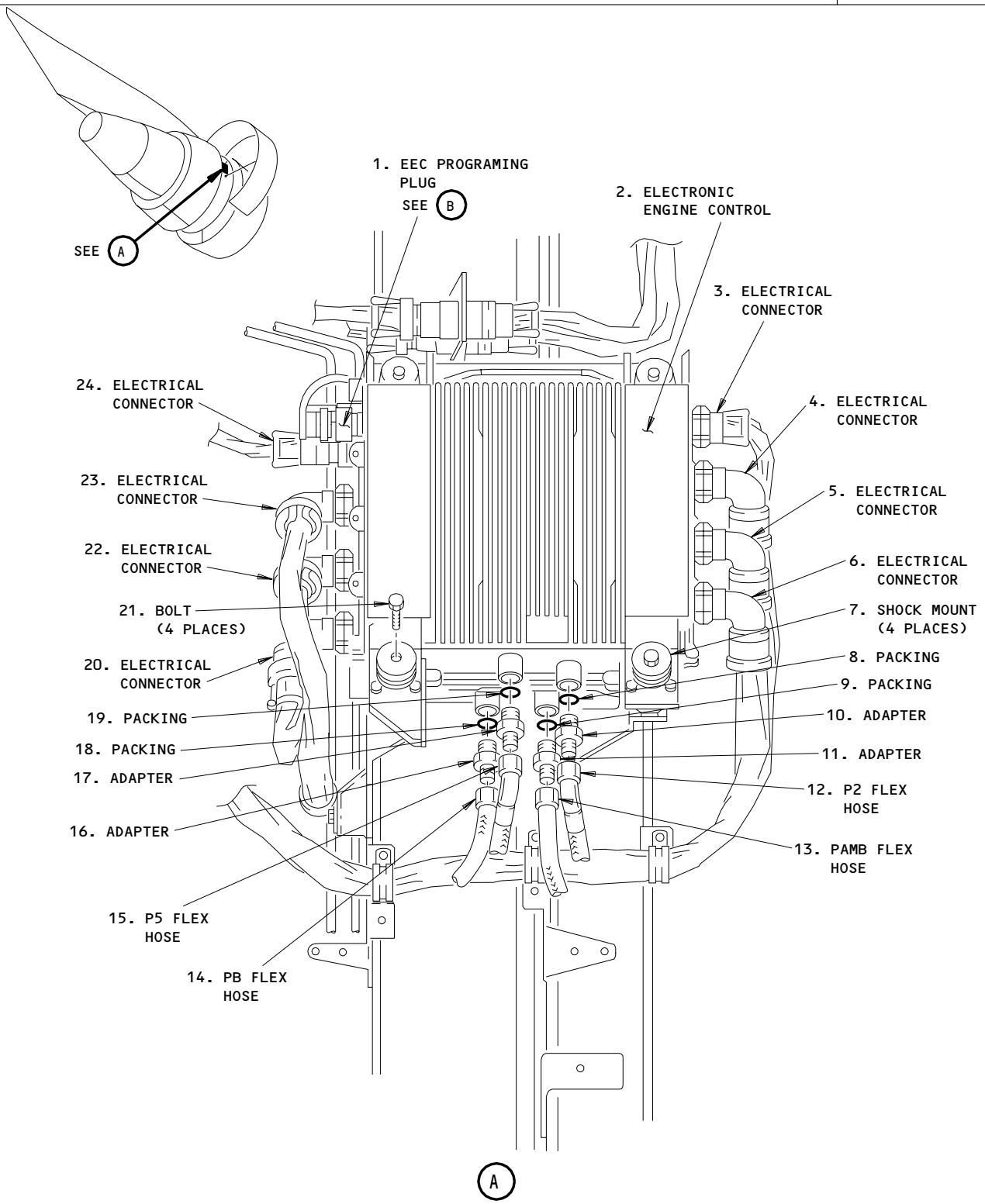

Electronic Engine Control Installation
Figure 401 (Sheet 1)

BOEING PROPRIETARY - Copyright (C) - Unpublished Work - See title page for details.

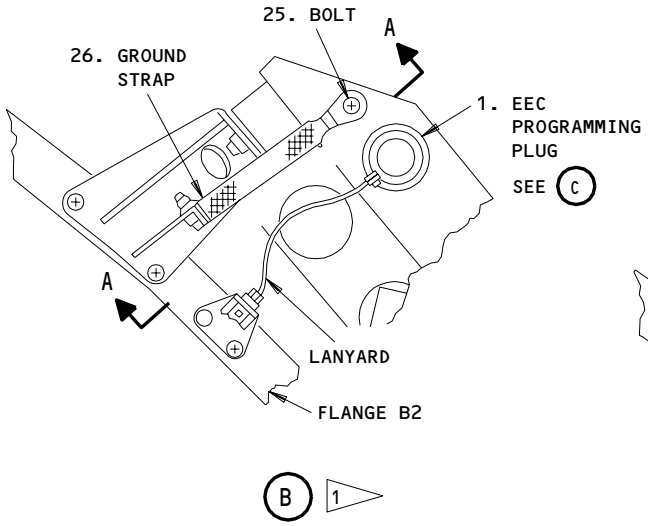

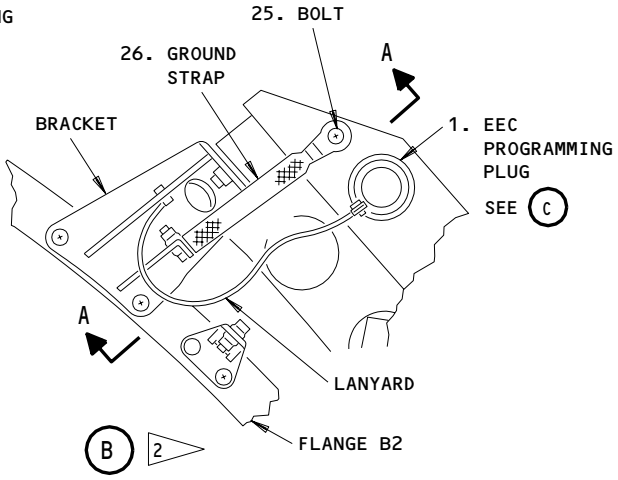

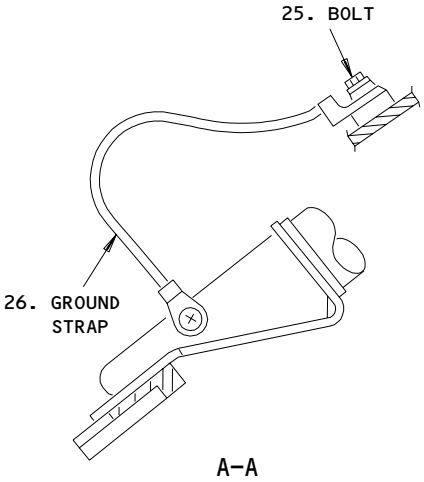

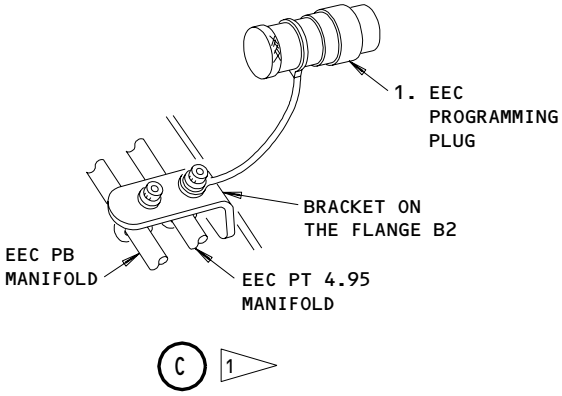

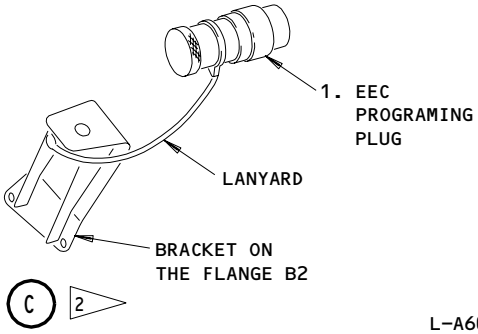

1 ENGINES PRE-PW-SB 72-306

2 ENGINES POST-PW-SB 72-306

L-A6033

Electronic Engine Control Installation
Figure 401 (Sheet 2)

BOEING PROPRIETARY - Copyright (C) - Unpublished Work - See title page for details.

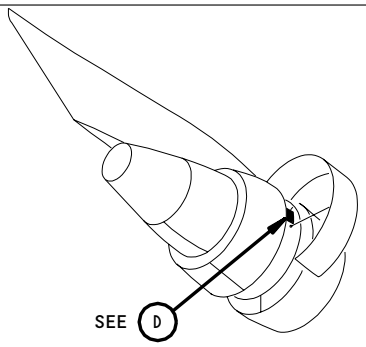

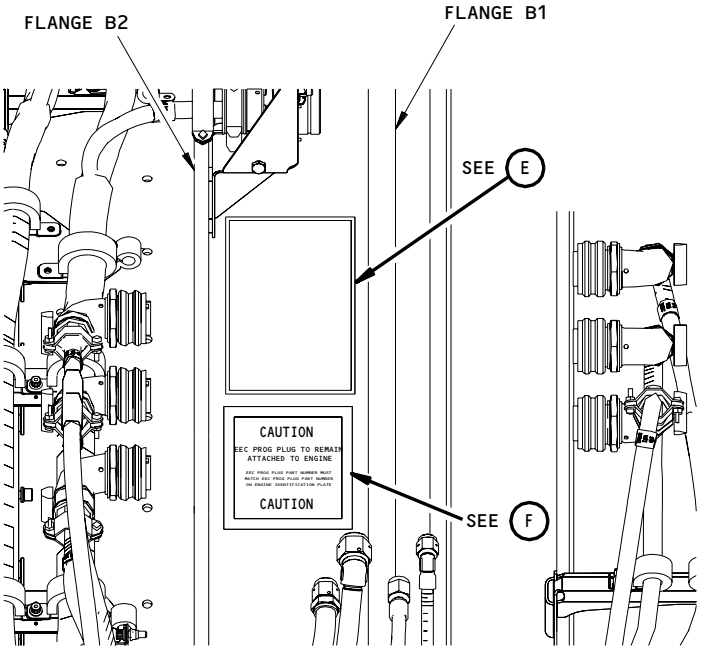

D 3

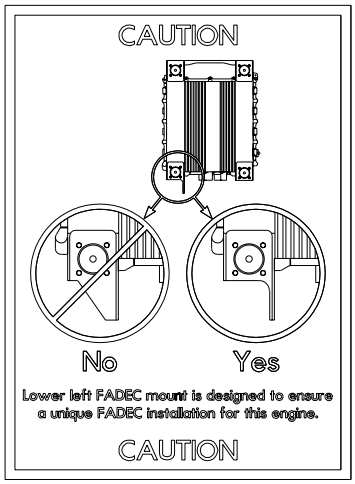

E 4

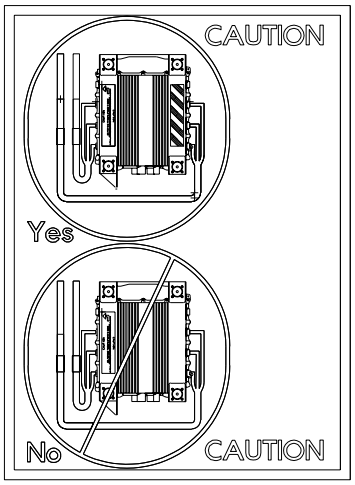

E 5

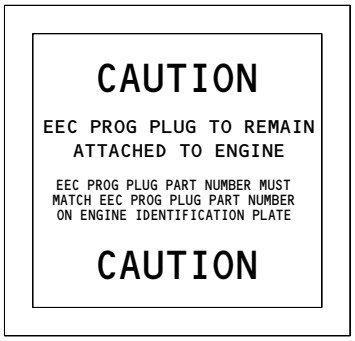

F

3 FAN CASE WITH EEC REMOVED. ENGINES THAT DO NOT HAVE SEGMENTED OR RING CASE HPC WILL NOT HAVE A LABEL

4 ENGINES WITH SEGMENTED CASE HPC

5 ENGINES WITH RING CASE HPC

L-D0815 (0103)

Electronic Engine Control Installation
Figure 401 (Sheet 3)

BOEING PROPRIETARY - Copyright (C) - Unpublished Work - See title page for details.

STATION		BOEING CARD NO.
TAIL NO.	SAS BOEING 767 TASK CARD	73-R04
DATE		AIRLINE CARD NO.

SKILL	WORK AREA	RELATED TASK	INTERVAL	PHASE	MPD REV	TASK CARD REVISION
ENGIN	ENGIN/STRUT				007	APR 22/06

TASK	TITLE	STRUCTURAL ILLUSTRATION REFERENCE	APPLICABILITY AIRPLANE	APPLICABILITY ENGINE
REPLACE	FUEL FLOW TRANSMITTER		ALL	4000

ZONES	ACCESS PANELS
410 420	416AR 426AR

MECH	INSP	MPD ITEM NUMBER

REPLACE THE FUEL FLOW TRANSMITTER. N73-31-01-4A

THIS CARD IS NOT A SCHEDULED MAINTENANCE TASK. IT IS A COMPONENT CHANGE CARD AND IT IS PROVIDED FOR OPERATOR CONVENIENCE DURING UNSCHEDULED MAINTENANCE ACTIVITIES. SEE APPENDIX A OF THE 767 MAINTENANCE PLANNING DATA (MPD) DOCUMENT,D622T001, FOR A DESCRIPTION OF THE COMPONENT CHANGE CARDS.

1. General

   A. The fuel flow transmitter is installed at approximately the 4 o'clock position. The fuel flow transmitter is found in the fuel line between the fuel metering unit and the fuel distribution valve.

2. Remove the Fuel Flow Transmitter

   A. References

      (1) AMM 24-22-00/201, Electrical Power - Control

      (2) AMM 71-11-04/201, Fan Cowl Panels

      (3) AMM 71-11-06/201, Core Cowl Panels

      (4) AMM 78-31-00/201, Thrust Reverser System

   B. Equipment

      (1) 5-gallon container for the fuel

   C. Consumables

      (1) D00137 Engine Oil - PWA 521

   D. Prepare to Remove the Fuel Flow Transmitter

BOEING PROPRIETARY - Copyright (C) - Unpublished Work - See title page for details.

MECH	INSP

(1) Supply electrical power (AMM 24-22-00/201).

(2) For the left engine, make sure this circuit breaker on the main power distribution panel, P6, is closed:

(a) 6E1, FUEL VALVE L SPAR

(3) For the right engine, make sure this circuit breaker on the main power distribution panel, P6, is closed:

(a) 6E2, FUEL VALVE R SPAR

(4) For the left engine, make sure this circuit breaker on the overhead circuit breaker panel, P11, is closed:

(a) 11D25, FUEL CONT VLV & EEC CHAN B RESET L

(5) For the right engine, make sure this circuit breaker on the overhead circuit breaker panel, P11, is closed:

(a) 11D26, FUEL CONT VLV & EEC CHAN B RESET R

(6) Make sure the applicable FUEL METERING switch on the control stand is in the CUTOFF position.

(7) Make sure the applicable ENG VALVE and SPAR VALVE lights on the control stand are off.

(8) For the left engine, open this circuit breaker on the main power distribution panel, P6, and attach the DO-NOT-CLOSE tag:

(a) 6E1, FUEL VALVE L SPAR

(9) For the right engine, open this circuit breaker on the main power distribution panel, P6, and attach the DO-NOT-CLOSE tag:

(a) 6E2, FUEL VALVE R SPAR

(10) For the left engine, open this circuit breaker on the overhead circuit breaker panel, P11, and attach the DO-NOT-CLOSE tag:

(a) 11D25, FUEL CONT VLV & EEC CHAN B RESET L

(11) For the right engine, open this circuit breaker on the overhead circuit breaker panel, P11, and attach the DO-NOT-CLOSE tag:

(a) 11D26, FUEL CONT VLV & EEC CHAN B RESET R

BOEING PROPRIETARY - Copyright (C) - Unpublished Work - See title page for details.

MECH	INSP

(12) Remove electrical power (AMM 24-22-00/201).

(13) Open the right fan cowl panel (AMM 71-11-04/201).

WARNING: DO THE THRUST REVERSER DEACTIVATION PROCEDURE TO PREVENT THE OPERATION OF THE THRUST REVERSER. THE ACCIDENTAL OPERATION OF THE THRUST REVERSER CAN CAUSE INJURIES TO PERSONS OR DAMAGE TO EQUIPMENT.

(14) Do this procedure: Thrust Reverser Deactivation for Ground Maintenance (AMM 78-31-00/201).

(15) Open the right core cowl panel (AMM 71-11-06/201).

WARNING: OBEY THE INSTRUCTIONS IN AMM 78-31-00/201 WHEN YOU OPEN THE THRUST REVERSERS. IF YOU DO NOT OBEY THE INSTRUCTIONS, INJURIES TO PERSONS OR DAMAGE TO EQUIPMENT CAN OCCUR.

(16) Open the right thrust reverser (AMM 78-31-00/201).

E. Remove the Fuel Flow Transmitter (Fig. 401)

(1) Disconnect the electrical connector (11) from the fuel flow transmitter (5).

(a) Install the protection caps.

(2) Put a container below the fuel flow transmitter (5) to catch the remaining fuel.

(3) Remove the bolts (12) which attach the clamps (13, 15, 21) to the bracket (22).

(4) Remove the bolts (18) which attach the bracket (22) to the U-section (23) and the fuel distribution valve (1).

(5) Remove the bracket (22) from the engine.

(6) Remove the remaining bolts (18, 24) which attach the U-section (23) to the fuel distribution valve (1) and the fuel flow transmitter (5).

(7) Remove the U-section (23) from the engine.

BOEING PROPRIETARY - Copyright (C) - Unpublished Work - See title page for details.

MECH | INSP

(8) ENGINES PRE-PW-SB 73-63;

Remove the bolts (8) which attach the HPC case bracket (29) and the forward end of the fuel flow transmitter (5).

(9) ENGINES POST-PW-SB 73-63;

Disconnect the forward end of the fuel flow transmitter (5) with the steps that follow:

(a) Remove the bolts (25) which attach the bracket (27) and plate (28) to the HPC case bracket (26).

(b) Remove the bolts (8) which attach the brackets (7 and 27) to the forward end of the fuel flow transmitter (5).

(10) Move the telescoping adapter (2) aft until the adapter (2) is against the fuel distribution valve (1).

(11) Remove the fuel flow transmitter (5) and the telescoping adapter (2) from the engine.

(a) Discard the gasket (4) and the packings (10).

CAUTION: YOU MUST PRESERVE THE FUEL FLOW TRANSMITTER IF YOU DO NOT INSTALL IT WITHIN 24 HOURS. IF THIS IS NOT DONE, THE INTERNAL PARTS OF THE TRANSMITTER WILL CORRODE.

(12) Preserve the transmitter (5) for these conditions:
- You will not install the same transmitter that you removed
- You will wait 24 hours or more before you install the transmitter.

(a) Fill the transmitter with oil.

(b) Drain the oil from the transmitter.

NOTE: Make sure there is a thin layer of oil on the internal parts of the transmitter.

(13) Install the protection covers.

3. Install the Fuel Flow Transmitter

BOEING PROPRIETARY - Copyright (C) - Unpublished Work - See title page for details.

MECH | INSP

A. Consumable Materials

(1) D00137 Engine Oil - PWA 521

(2) D00504 Petrolatum - PMC 9609

B. Parts

AMM			AIPC		
FIG	ITEM	NOMENCLATURE	SUBJECT	FIG	ITEM
401	4	Gasket	73-31-01	01	25
				07	20
				08	20
	5	Transmitter - Fuel Flow	73-31-01	01	35
				07	30
				08	30
	10	Packing	73-31-01	01	30
				07	25
				08	25

C. References

(1) AMM 71-00-00/501, Power Plant

(2) AMM 71-11-04/201, Fan Cowl Panels

(3) AMM 71-11-06/201, Core Cowl Panels

(4) AMM 78-31-00/201, Thrust Reverser System

D. Install the Fuel Flow Transmitter (Fig. 401)

(1) Remove the protection covers.

(2) Lubricate the packings (10) with petrolatum.

(3) Install the packings (10) into the grooves in the forward mounting flange (6) and the telescoping adapter flange (3).

(4) Lubricate the two sides of the gasket (4) with engine oil.

BOEING PROPRIETARY - Copyright (C) - Unpublished Work - See title page for details.

MECH	INSP

(5) Put the gasket (4) and the fuel flow transmitter (5) to the forward mounting flange (6).

(a) Make sure to align the indexing pin.

(6) ENGINES PRE-PW-SB 73-63;

Attach the forward end of the fuel flow transmitter (5) with the steps that follow:

(a) Lubricate the threads of the bolts (8) with engine oil.

(b) Attach the forward end of the fuel flow transmitter (5) to the forward mounting flange (6), bracket (7) and the HPC case bracket (29) with the bolts (8) and washers (9).

(c) Tighten the bolts (8) to 90-110 pound-inches (10.168-12.427 newton-meters).

(7) ENGINES POST-PW-SB 73-63;

Attach the forward end of the fuel flow transmitter (5) with the steps that follow:

(a) Lubricate the threads of the bolts (8) with engine oil.

(b) Attach the forward end of the fuel flow transmitter (5) to the forward mounting flange (6) and the brackets (7 and 27) with the bolts (8) and washers (9).

(c) Tighten the bolts (8) to 90-110 pound-inches (10.168-12.427 newton-meters).

(d) Lubricate the threads of the bolts (25) with engine oil.

(e) Attach the bracket (27) and plate (28) to the HPC case bracket (26) with the bolts (25).

1) Tighten the bolts (25) with your hand.

(8) Lubricate the two sides of the gasket (4) with engine oil.

(9) Install the gasket (4) into the aft end of the fuel flow transmitter (5).

(10) Install the telescoping adapter (2) to the fuel distribution valve (1).

BOEING PROPRIETARY - Copyright (C) - Unpublished Work - See title page for details.

(a) Extend the telescoping adapter (2) forward until the flange of the telescoping adapter is against the gasket (4).

(11) Install the U-section (23) to the telescoping adapter (2).

(12) Lubricate the threads of the bolts (24) with engine oil.

(13) Install the bolts (24) and washers (25) to the forward end of the U-section (23), the telescoping adapter flange (3) and the aft end of the fuel flow transmitter (5).

(a) Tighten the bolts (24) to 90-110 pound-inches (10.168-12.427 newton meters).

(14) Install the bracket (22) to the aft end of the U-section (23).

(15) Lubricate the threads of the bolts (18) with engine oil.

(16) Install the bolts (18) to the bracket (22), U-section (23) and the fuel distribution valve (1).

(a) Tighten the bolts (18) to 85-95 pound-inches (9.603-10.732 newton meters).

(17) ENGINES POST-PW-SB 73-63;

Tighten the bolts (25) which attach the bracket (27) and plate (28) to the HPC case bracket (26) to 85-95 pound-inches (9.6-10.7 newton-meters).

(18) Lubricate the threads of the bolts (12) with engine oil.

(19) Install the clamps (13, 15, 21) to the bracket (22) with the bolts (12) and nuts (16).

(a) Tighten the bolts (12) to 36-40 pound-inches (4.067-4.519 newton meters).

(20) Connect the electrical connector (11) to the fuel flow transmitter (5).

E. Put the Airplane Back to Its Usual Condition

BOEING PROPRIETARY - Copyright (C) - Unpublished Work - See title page for details.

MECH	INSP

WARNING: OBEY THE INSTRUCTIONS IN AMM 78-31-00/201 WHEN YOU CLOSE THE THRUST REVERSERS. IF YOU DO NOT OBEY THE INSTRUCTIONS, INJURIES TO PERSONS OR DAMAGE TO EQUIPMENT CAN OCCUR.

(1) Close the right thrust reverser (AMM 78-31-00/201).

(2) Close the right core cowl panel (AMM 71-11-06/201).

(3) Close the fan cowl panel (AMM 71-11-04/201).

(4) Do the activation procedure for the thrust reversers (AMM 78-31-00/201).

(5) For the left engine, remove the DO-NOT-CLOSE tag and close this circuit breaker on the P6 panel:

(a) 6E1, FUEL VALVE L SPAR

(6) For the right engine, remove the DO-NOT-CLOSE tag and close this circuit breaker on the P6 panel:

(a) 6E2, FUEL VALVE R SPAR

(7) For the left engine, remove the DO-NOT-CLOSE tag and close this circuit breaker on the P11 panel:

(a) 11D25, FUEL CONT VLV & EEC CHAN B RESET L

(8) For the right engine, remove the DO-NOT-CLOSE tag and close this circuit breaker on the P11 panel:

(a) 11D26, FUEL CONT VLV & EEC CHAN B RESET R

(9) Do a test of the fuel flow transmitter that is shown in the Power Plant Test Reference Table (AMM 71-00-00/501).

BOEING PROPRIETARY - Copyright (C) - Unpublished Work - See title page for details.

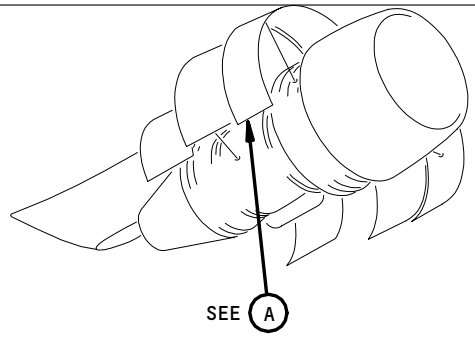

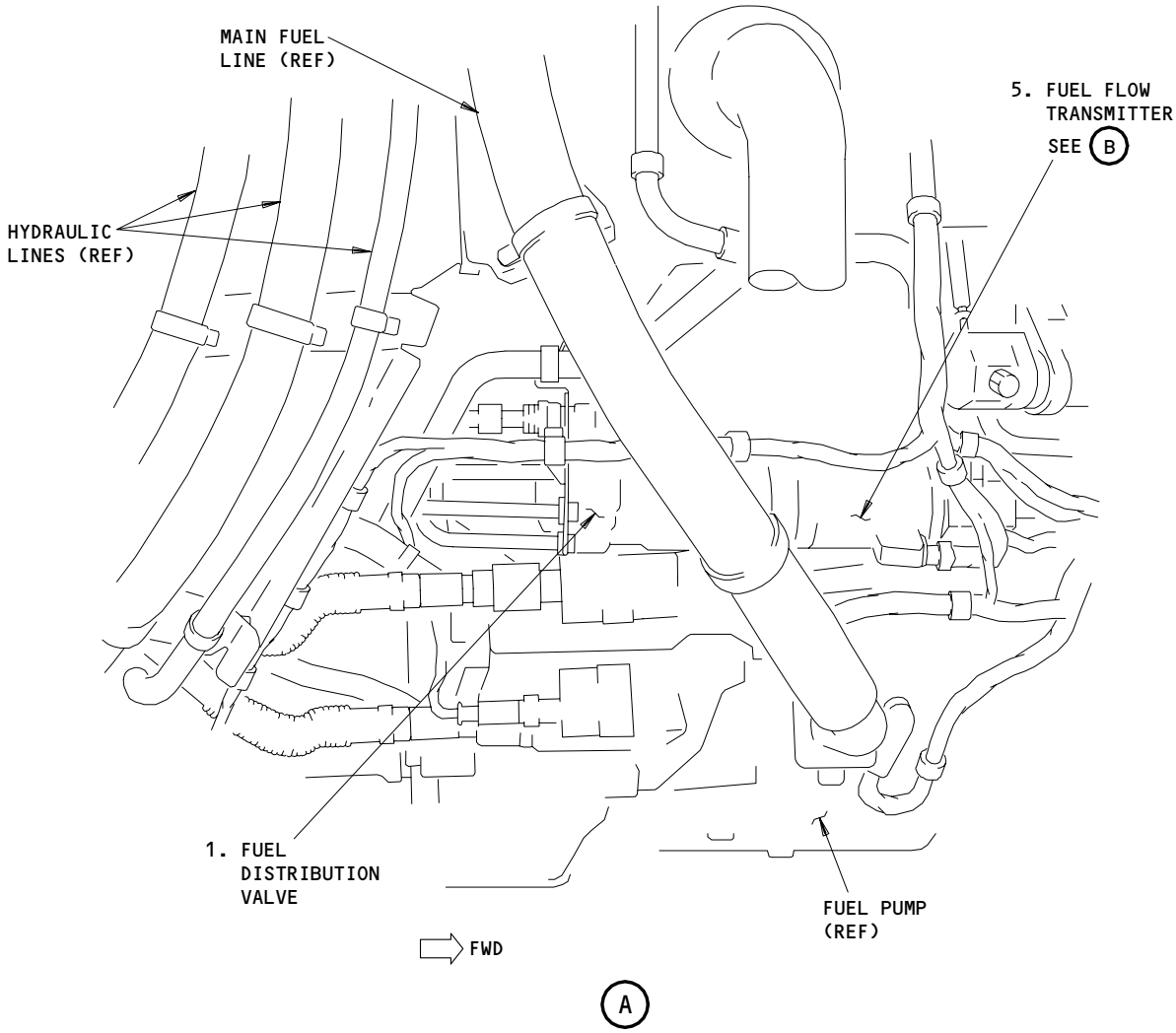

Fuel Flow Transmitter Installation
Figure 401 (Sheet 1)

BOEING PROPRIETARY - Copyright (C) - Unpublished Work - See title page for details.

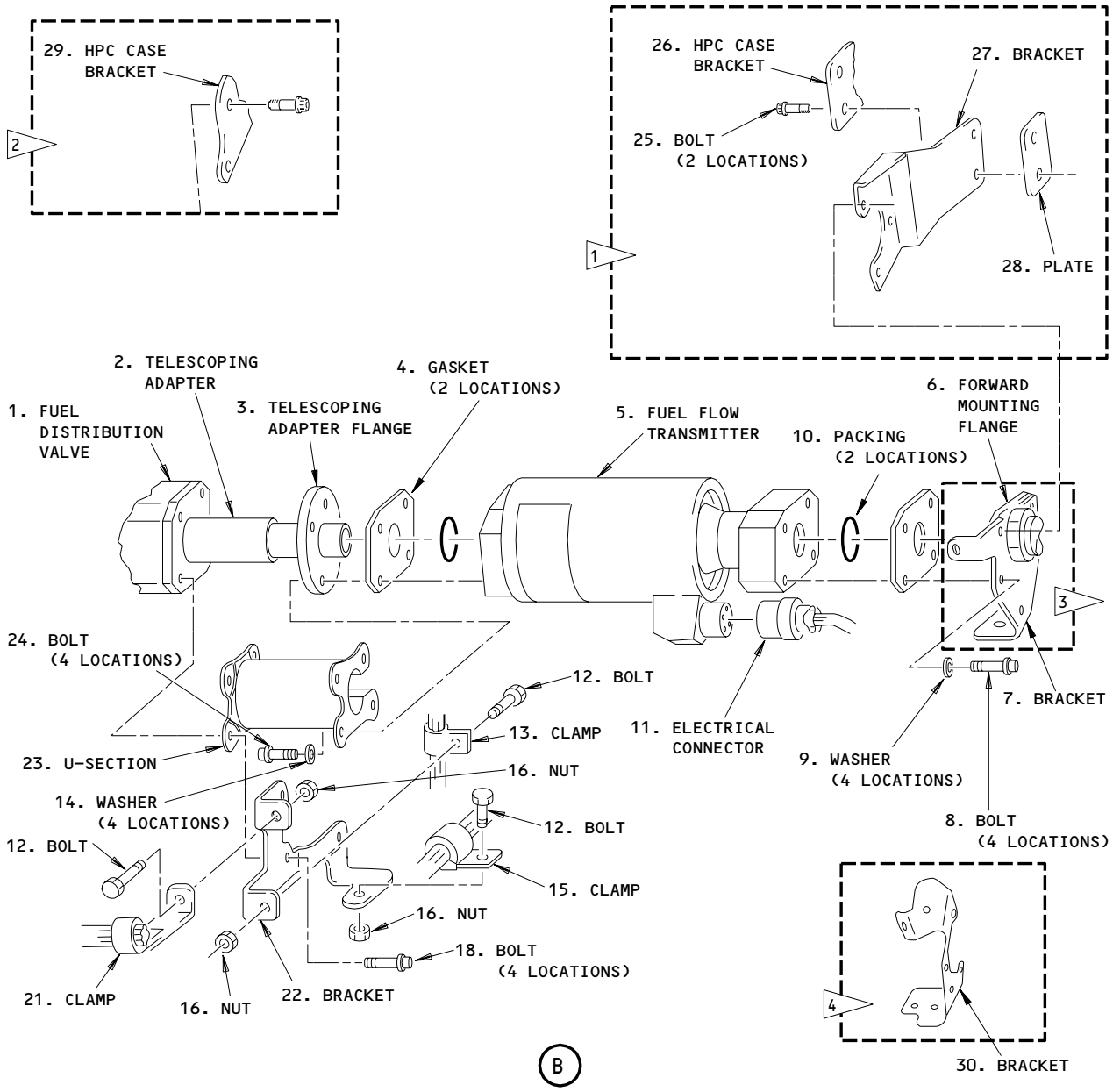

1 ENGINES POST-PW-SB 73-63
2 ENGINES PRE-PW-SB 73-63
3 ENGINES POST-PW-SB 73-140
4 ENGINES PRE-PW-SB 73-140 OR 73-146

Fuel Flow Transmitter Installation
Figure 401 (Sheet 2)

BOEING PROPRIETARY - Copyright (C) - Unpublished Work - See title page for details.

STATION		BOEING CARD NO.
TAIL NO.	SAS BOEING 767 TASK CARD	73-R05
DATE		AIRLINE CARD NO.

SKILL	WORK AREA	RELATED TASK	INTERVAL	PHASE	MPD REV	TASK CARD REVISION
ENGIN	ENGIN/STRUT				007	APR 22/05

TASK	TITLE	STRUCTURAL ILLUSTRATION REFERENCE	APPLICABILITY AIRPLANE	APPLICABILITY ENGINE
REPLACE	N1 SPEED TRANSDUCER		ALL	4000

ZONES	ACCESS PANELS
410 420	412AR 414AR 416AR 422AR 424AR 426AR

MECH	INSP	MPD ITEM NUMBER

REPLACE THE N1 SPEED TRANSDUCER. N73-21-06-4A

THIS CARD IS NOT A SCHEDULED MAINTENANCE TASK. IT IS A COMPONENT CHANGE CARD AND IT IS PROVIDED FOR OPERATOR CONVENIENCE DURING UNSCHEDULED MAINTENANCE ACTIVITIES. SEE APPENDIX A OF THE 767 MAINTENANCE PLANNING DATA (MPD) DOCUMENT,D622T001, FOR A DESCRIPTION OF THE COMPONENT CHANGE CARDS.

1. Remove the EEC N1 Speed Transducer

A. Equipment

(1) ENGINES PRE-PW-SB 73-88;

B. References

(1) AMM 71-00-00/501, Power Plant - General

(2) AMM 71-11-04/201, Fan Cowl Panels

(3) AMM 71-11-06/201, Core Cowl Panels

(4) AMM 72-34-03/401, Fan Exit Liner Segments

(5) AMM 78-31-00/201, Thrust Reverser System

C. Prepare to Remove the Speed Transducer

(1) Open the right fan cowl panel (AMM 71-11-04/201).

BOEING PROPRIETARY - Copyright (C) - Unpublished Work - See title page for details.

MECH	INSP

WARNING: DO THE THRUST REVERSER DEACTIVATION PROCEDURE TO PREVENT THE OPERATION OF THE THRUST REVERSER. THE ACCIDENTAL OPERATION OF THE THRUST REVERSER CAN CAUSE INJURY TO PERSONS OR DAMAGE TO EQUIPMENT.

(2) Do this procedure: Thrust Reverser Deactivation for Ground Maintenance (AMM 78-31-00/201).

(3) Open the right core cowl panel (AMM 71-11-06/201).

WARNING: OBEY THE INSTRUCTIONS IN AMM 78-31-00/201 WHEN YOU OPEN THE THRUST REVERSERS. IF YOU DO NOT OBEY THE INSTRUCTIONS, INJURY TO PERSONS OR DAMAGE TO EQUIPMENT COULD OCCUR.

(4) Open the right thrust reverser (AMM 78-31-00/201).

D. Procedure

(1) Remove the inner liner from the fan exit case at approximately the 5 o'clock position (AMM 72-34-03/401).

(2) Do these steps to remove the accessory cooling tube:

(a) Remove the bolts which attach the tube flanges to the manifold flange and case boss.

(b) Remove the accessory cooling tube from the engine.

(c) Install caps on the openings.

(3) Remove the speed transducer (Fig. 401):

(a) ALL MTH AIRCRAFT;

Disconnect the electrical connector on the speed transducer.

(b) ALL SAS AIRCRAFT;

Do these steps to disconnect the components attached to the speed transducer:

1) Disconnect the electrical connectors from the speed transducer probe.

BOEING PROPRIETARY - Copyright (C) - Unpublished Work - See title page for details.

2) Disconnect and remove the PT2.5 sensing manifold from between the speed transducer probe and the PT2.5 sensing tube.

(c) Bend the tabs of the key washers until you can loosen the bolts which attach the transducer flange to the intermediate case.

(d) ENGINES PRE-PW-SB 73-88;

Equally remove the bolts and washers which attach the speed transducer.

NOTE: The speed transducer has a spring in it. Loosen the bolts equally (not one at a time).

(e) ENGINES POST-PW-SB 73-88;

Equally remove the bolts, nut, and cable clamp bracket which attach the speed transducer to the intermediate case.

NOTE: The speed transducer has a spring in it. Loosen the bolts and nut equally (not one at a time).

(f) ALL SAS AIRCRAFT;

Move the PT2.5 tube until you can remove the speed transducer.

CAUTION: DO NOT TURN THE SPEED TRANSDUCER UNTIL YOU DISENGAGE IT FROM THE INNER BRACKET. IF YOU TURN THE SPEED TRANSDUCER, YOU CAN CAUSE DAMAGE TO THE SPEED TRANSDUCER OR THE ENGINE.

(g) ENGINES PRE-PW-SB 73-88;

Use the puller (PWA 101359) to break the interface between the flange of the speed transducer and the intermediate case and remove the speed transducer from the engine.

(h) ENGINES POST-PW-SB 73-88;

BOEING PROPRIETARY - Copyright (C) - Unpublished Work - See title page for details.

MECH	INSP

Use three jackscrews to break the interface between the flange of the speed transducer and the intermediate case and remove the speed transducer from the engine.

NOTE: The jackscrew holes are 0.190-32 UNJF thread.

(i) Remove the three packings from the speed transducer.

(j) Install caps on the openings.

2. Install the EEC N1 Speed Transducer (Speed Transducer)

A. Equipment

(1) M303, M305, or M307 Bergen Mechanical Crimper
Bergen Cable Technologies Inc
170 Gregg St
P.O. Box 1300
Lodi, NJ 07644-9982

B. Consumable Materials

(1) D00045 Beeswax

(2) D00137 Engine Oil - PWA 521

(3) D00504 Petrolatum, PMC 9609

(4) G02334 Lockwire - AS3214-02

(5) G02332 Ferrule - P05-292 (Optional)

(6) G02335 Cable - Safety - P05-291 (Optional)

C. References

(1) AMM 70-24-05/201, Electrical Harnesses

(2) AMM 71-00-00/501, Power Plant - General

(3) AMM 71-11-04/201, Fan Cowl Panels

(4) AMM 71-11-06/201, Core Cowl Panels

(5) AMM 72-34-03/401, Fan Exit Liner Segments

BOEING PROPRIETARY - Copyright (C) - Unpublished Work - See title page for details.

MECH	INSP

(6) AMM 78-31-00/201, Thrust Reverser system

D. Procedure

(1) Remove the caps from the openings.

(2) Apply approximately 0.070 inch (1.778 mm) of beeswax to the flat surface on the small end of the speed transducer.

(3) Install a Class 1 shim in the machined recess on the lower shoulder of the speed transducer.

NOTE: Do not install the three packings to the speed transducer at this time.

(4) Do the initial installation of the speed transducer (Fig. 401):

CAUTION: DO NOT TURN THE SPEED TRANSDUCER DURING THE INSTALLATION. INSTALL THE SPEED TRANSDUCER WITH THE ELECTRICAL CONNECTOR TO THE REAR. IF YOU TURN THE SPEED TRANSDUCER, YOU CAN CAUSE DAMAGE TO THE ENGINE OR THE SPEED TRANSDUCER.

(a) ALL MTH AIRCRAFT;

Carefully install the speed transducer in the opening on the intermediate case at approximately the 5 o'clock position.

1) Make sure the electrical connector points to the rear.

CAUTION: DO NOT TURN THE SPEED TRANSDUCER DURING THE INSTALLATION. INSTALL THE SPEED TRANSDUCER WITH THE LARGER ELECTRICAL CONNECTOR TO THE REAR. IF YOU TURN THE SPEED TRANSDUCER, YOU CAN CAUSE DAMAGE TO THE ENGINE OR THE SPEED TRANSDUCER.

(b) ALL SAS AIRCRAFT;

Carefully install the speed transducer in the opening on the intermediate case at approximately the 5 o'clock position.

1) Make sure the larger electrical connector points to the rear.

BOEING PROPRIETARY - Copyright (C) - Unpublished Work - See title page for details.

(c) ENGINES WITHOUT THE SELF-LOCKING INSERTS;

Attach the speed transducer with the steps that follow:

1) ALL MTH AIRPLANES PRE-PW-SB 73-88;

Do the steps that follow:

a) Lubricate the threads of the bolts, which attach the speed transducer, with engine oil.

b) Attach the speed transducer with the bolts and key washers.

NOTE: Engine with POST PW SB PW4ENG 72-182, install the drilled bolt into the mounting hole next to the PT2.5 connection on the transducer.

c) Tighten the bolts equally to 65-85 pound-inches (7.3-9.6 newton-meters).

2) ALL SAS AIRCRAFT PRE-PW-SB 73-88;

Do the steps that follow:

a) Lubricate the threads of the bolts, which attach the speed transducer, with engine oil.

b) Attach the speed transducer with the bolts and key washers.

NOTE: If this is the second installation, make sure the bolt with the wire hole is adjacent to the PT2.5 tube connctor.

NOTE: Engine with POST PW SB PW4ENG 72-182, install the drilled bolt into the mounting hole next to the PT2.5 connection on the transducer.

c) Tighten the bolts equally to 65-85 pound-inches (7.3-9.6 newton-meters).

3) ALL MTH AIRPLANES POST-PW-SB 73-88;

Do the steps that follow:

BOEING PROPRIETARY - Copyright (C) - Unpublished Work - See title page for details.

a) Lubricate the threads of the bolts and nut, which attach the speed transducer, with engine oil.

b) Attach the speed transducer with the bolts, nut, and key washers.

NOTE: Engine with POST PW SB PW4ENG 72-182, install the drilled bolt into the mounting hole next to the PT2.5 connection on the transducer.

c) Equally tighten the bolts to 65-85 pound-inches (7.3-9.6 newton-meters) and nut to 150-170 pound-inches (16.9-19.2 newton-meters).

4) ALL SAS AIRCRAFT POST-PW-SB 73-88;

Do the steps that follow:

a) Lubricate the threads of the bolts and nut, which attach the speed transducer, with engine oil.

b) Attach the speed transducer with the bolts, nut, and key washers.

NOTE: If this is the second installation, make sure the bolt with the wire hole is adjacent to the PT2.5 tube connector.

NOTE: Engine with POST PW SB PW4ENG 72-182, install the drilled bolt into the mounting hole next to the PT2.5 connection on the transducer.

c) Equally tighten the bolt to 65-85 pound-inches (7.3-9.6 newton-meters) and nut to 150-170 pound-inches (16.9-19.2 newton-meters).

5) If this is the second installation, bend the key washers against the heads of the bolts.

NOTE: Do not bend the key washers after the first installation.

(d) ENGINES WITH THE SELF-LOCKING INSERTS;

BOEING PROPRIETARY - Copyright (C) - Unpublished Work - See title page for details.

MECH	INSP

Attach the speed transducer with the steps that follow:

1) ALL MTH AIRCRAFT PRE-PW-SB 73-88;

   Do the steps that follow:

   a) Lubricate the threads of the bolts, which attach the speed transducer, with engine oil.

   b) Attach the speed transducer with the bolts and flat washers.

   c) Tighten the bolts equally to 85-95 pound-inches (9.6-10.7 newton-meters).

2) ALL SAS AIRCRAFT PRE-PW-SB 73-88;

   do the steps that follow:

   a) Lubricate the threads of the bolts, which attach the speed transducer, with engine oil.

   b) Attach the speed transducer with the bolts and flat washers.

      NOTE: If this is the second installation, make sure the bolt with the wire hole is adjacent to the PT2.5 tube connector.

   c) Tighten the bolts to 85-95 pound-inches (9.6-10.7 newton-meters).

3) ALL MTH AIRCRAFT POST-PW-SB 73-88;

   Do the steps that follow:

   a) Lubricate the threads of the bolts and nut, which attach the speed transducer, with engine oil.

   b) Attach the speed transducer with the bolts, nut, and flat washers.

   c) Equally tighten the bolts to 85-95 pound-inches (9.6-10.7 newton-meters) and nut to 150-170 pound-inches (16.9-19.2 newton-meters).

BOEING PROPRIETARY - Copyright (C) - Unpublished Work - See title page for details.

4) ALL SAS AIRCRAFT POST-PW-SB 73-88;

Do the steps that follow:

a) Lubricate the threads of the bolts and nut, which attach the speed transducer, with engine oil.

b) Attach the speed transducer with the bolts, nut, and flat washers.

NOTE: If this is the second installation, make sure the bolt with the wire hole is adjacent to the PT2.5 tube connector.

c) Equally tighten the bolts to 85-95 pound-inches (9.6-10.7 newton-meters) and the nut to 150-170 pound-inches (16.9-19.2 newton-meters).

(5) Do these steps to make sure the speed transducer is in the correct position:

(a) Slowly turn the fan rotor counterclockwise (view from the front) approximately 15 degrees.

(b) Loosen the four bolts and remove the speed transducer from the engine.

(c) Carefully cut the wax away from the flat surface at the end of the speed transducer.

(d) Measure the thickness of the wax in the area where the wax is the thinnest.

(e) If the depth of the wax is between 0.020-0.050 inch (0.508-1.270 mm), the correct shim is installed.

(f) If the depth of the wax is less than 0.020 inch (0.508 mm), replace the Class 1 shim with a Class 2 shim.

(g) If the depth of the wax is more than 0.050 inch (1.270 mm), remove the Class 1 shim.

(h) Remove all wax from the end of the speed transducer.

(6) Do the final installation of the speed transducer:

BOEING PROPRIETARY - Copyright (C) - Unpublished Work - See title page for details.

MECH	INSP

(a) Install the packings to the grooves in the shaft of the speed transducer.

(b) Lubricate the packing, which is installed on the speed transducer flange, with the petrolatum.

(c) Install the packing to the groove in the speed transducer flange.

(d) Do the steps of the initial installation of the speed transducer again.

(e) ALL SAS AIRCRAFT;

do these steps to install the PT2.5 sensing manifold and the electrical connectors to the speed transducer:

CAUTION: DO NOT USE OF LUBRICANTS WHEN YOU INSTALL EEC SENSING TUBES, ADAPTERS, OR PACKINGS. DAMAGE TO THE EEC FROM CONTAMINATION CAN OCCUR.

1) Install the PT2.5 sensing manifold between the speed transducer probe and PT2.5 sensing tube.

2) Tighten the tube nuts to 135-150 pound-inches (15.2-16.9 newton-meters).

3) Safety the tube nuts with lockwire or safety cable and safety cable ferrule.

NOTE: Engine with POST PW SB PW4ENG 72-182, safety the tube nut to the drilled transducer mount bolt.

4) Remove the caps from the electrical connectors.

CAUTION: USE THE CORRECT ASSEMBLY PROCEDURE, AND TOOLS, FOR THE HARNESS CONNECTOR INSTALLATION (AMM 70-24-05/201). IF YOU USE THE INCORRECT ASSEMBLY PROCEDURE, OR TOOLS, A DAMAGED OR LOOSE CONNECTOR CAN OCCUR. A LOOSE CONNECTOR PERMITS VIBRATION, WHICH CAUSES THE CONTACTS TO WEAR AND DECREASES THE LIGHTNING PROTECTION.

BOEING PROPRIETARY - Copyright (C) - Unpublished Work - See title page for details.

5) Install the electrical connectors on the speed transducer (AMM 70-24-05/201).

(f) ALL MTH AIRCRAFT;

Do these steps to install the electrical connector to the speed transducer:

1) Remove the cap from the electrical connector.

CAUTION: USE THE CORRECT ASSEMBLY PROCEDURE, AND TOOLS, FOR THE HARNESS CONNECTOR INSTALLATION (AMM 70-24-05/201). IF YOU USE THE INCORRECT ASSEMBLY PROCEDURE, OR TOOLS, A DAMAGED OR LOOSE CONNECTOR CAN OCCUR. A LOOSE CONNECTOR PERMITS VIBRATION, WHICH CAUSES THE CONTACTS TO WEAR AND DECREASES THE LIGHTNING PROTECTION.

2) Install the electrical connector on the speed transducer (AMM 70-24-05/201).

(7) Do these steps to install the accessory cooling air tube:

(a) Remove the caps and install the cooling air tube tube between the manifold flange and the case boss.

(b) Install the cooling air tube to the manifold flange with bolts lubricated with oil, washers, nuts.

1) Tighten the bolts to 85-95 pound-inches (9.6-10.7 newton-meters).

(c) Install the cooling air tube to the case boss with bolts lubricated with oil.

1) Tighten the bolts to 85-95 pound-inches (9.6-10.7 newton-meters).

(8) Install the inner liner to the fan case (AMM 72-34-03/401).

E. Return the Aircraft to Its Usual Condition

BOEING PROPRIETARY - Copyright (C) - Unpublished Work - See title page for details.

MECH	INSP

WARNING: OBEY THE INSTRUCTIONS IN AMM 78-31-00/201 WHEN YOU CLOSE THE THRUST REVERSERS. IF YOU DO NOT OBEY THE INSTRUCTIONS, INJURY TO PERSONS OR DAMAGE TO EQUIPMENT COULD OCCUR.

(1) Close the right thrust reverser (AMM 78-31-00/201).

(2) Close the right core cowl panel (AMM 71-11-06/201).

(3) Do the activation procedure for the thrust reverser (AMM 78-31-00/201).

(4) Close the right fan cowl panel (AMM 71-11-04/201).

(5) Do the test for the EEC speed transducer (N1) which is shown in the Power-Plant Test-Reference Table (AMM 71-00-00/501).

BOEING PROPRIETARY - Copyright (C) - Unpublished Work - See title page for details.

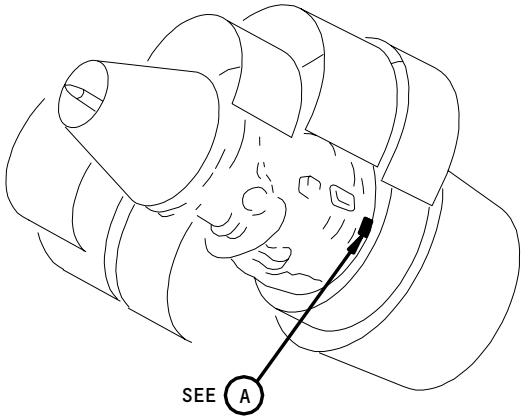

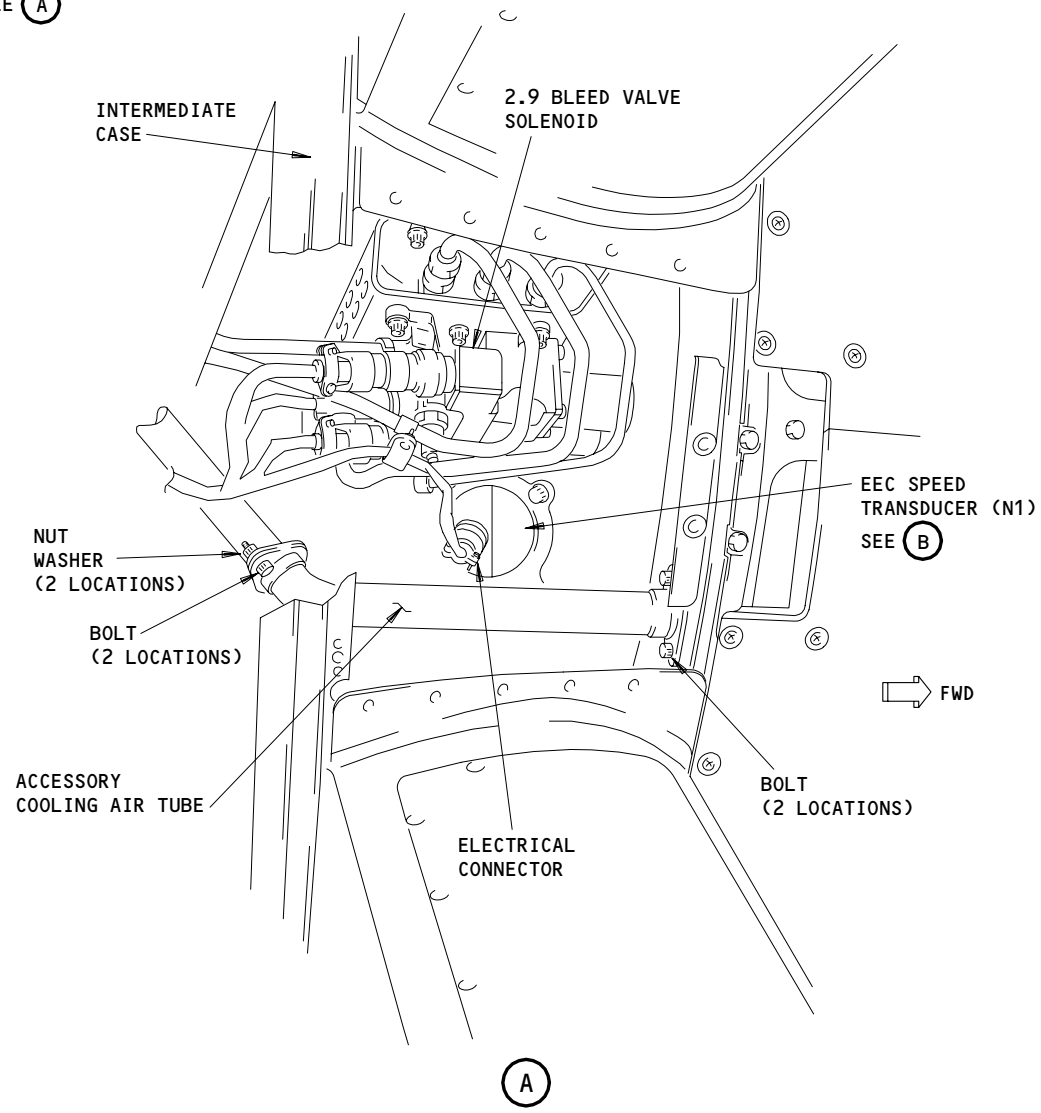

L-A0222

EEC Speed Transducer (N1) Installation
Figure 401 (Sheet 1)

BOEING PROPRIETARY - Copyright (C) - Unpublished Work - See title page for details.

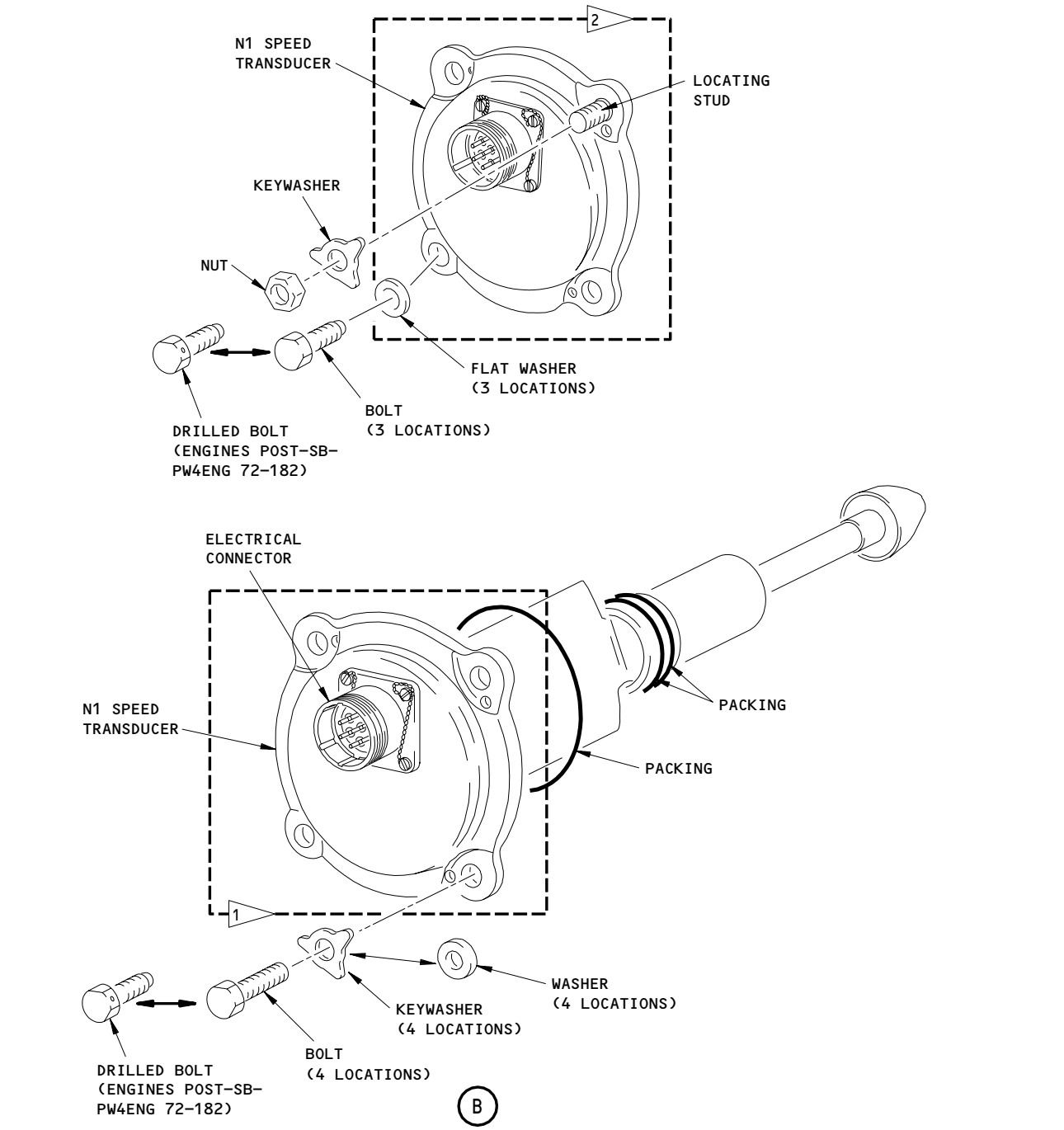

EEC Speed Transducer (N1) Installation
Figure 401 (Sheet 2)

BOEING PROPRIETARY - Copyright (C) - Unpublished Work - See title page for details.

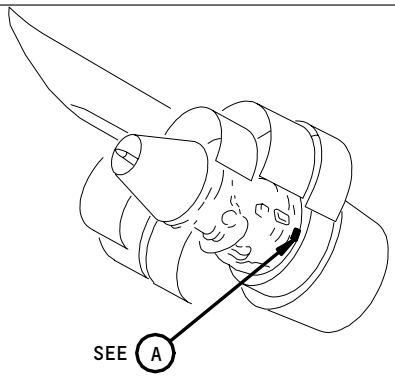

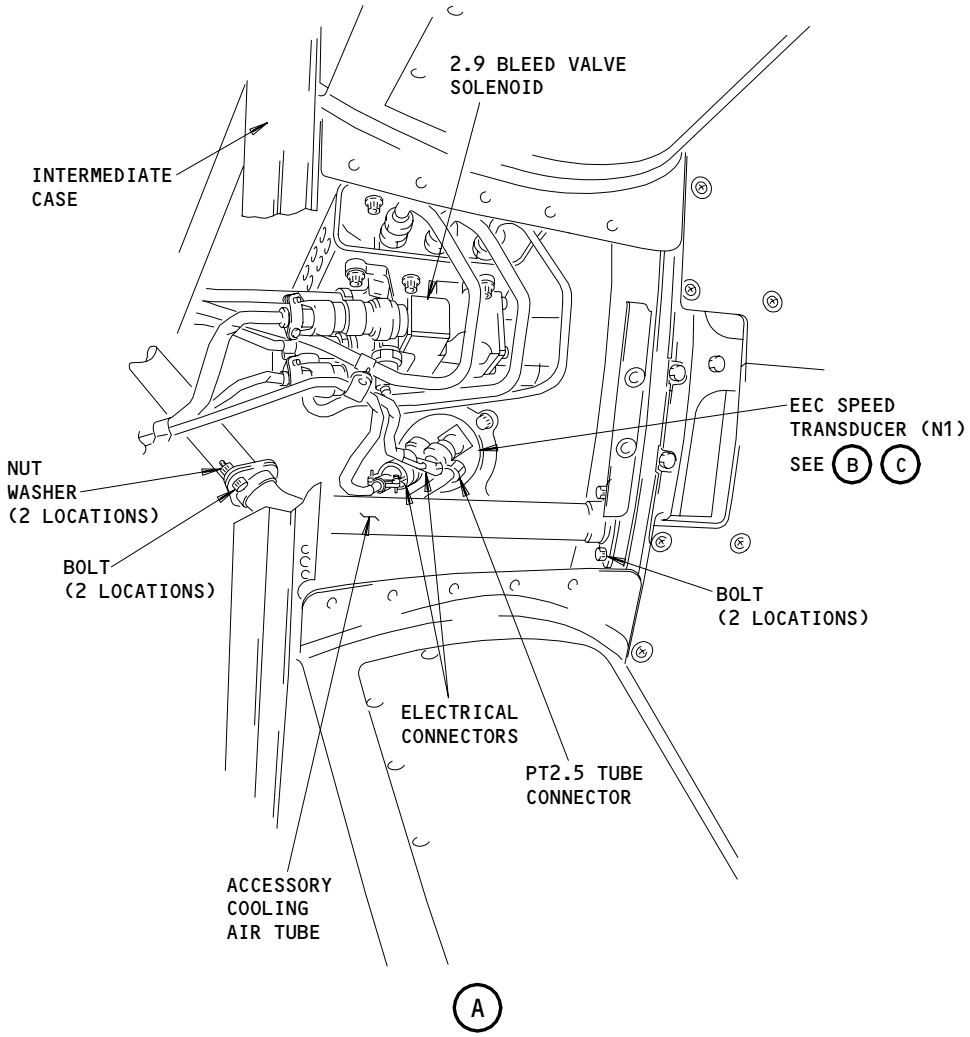

EEC Speed Transducer (N1) Installation
Figure 401 (Sheet 3)

BOEING PROPRIETARY - Copyright (C) - Unpublished Work - See title page for details.

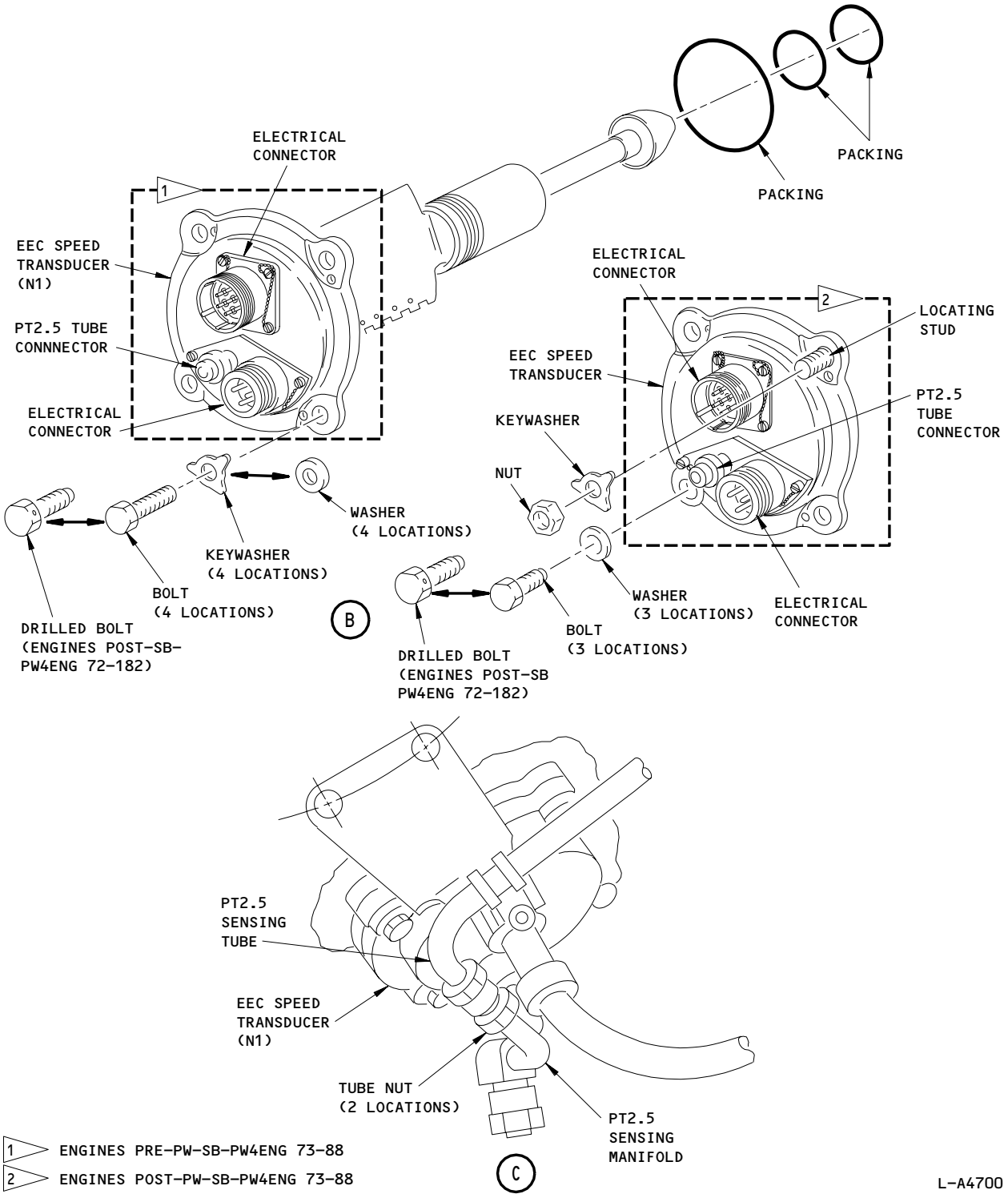

EEC Speed Transducer (N1) Installation
Figure 401 (Sheet 4)

BOEING PROPRIETARY - Copyright (C) - Unpublished Work - See title page for details.

STATION		BOEING CARD NO.
TAIL NO.	SAS BOEING 767 TASK CARD	73-R06
DATE		AIRLINE CARD NO.

SKILL	WORK AREA	RELATED TASK	INTERVAL	PHASE	MPD REV	TASK CARD REVISION
ENGIN	ENGIN/STRUT				007	APR 22/08

TASK	TITLE	STRUCTURAL ILLUSTRATION REFERENCE	APPLICABILITY AIRPLANE	APPLICABILITY ENGINE
REPLACE	N2 EEC ALTERNATOR		ALL	4000

ZONES	ACCESS PANELS
410 420	412AR 413AL 414AR 415AL 416AR 422AR 423AL 424AR 425AL 426AR

MECH	INSP	MPD ITEM NUMBER

REPLACE THE N2 EEC ALTERNATOR. N73-21-05-4A

THIS CARD IS NOT A SCHEDULED MAINTENANCE TASK. IT IS A COMPONENT CHANGE CARD AND IT IS PROVIDED FOR OPERATOR CONVENIENCE DURING UNSCHEDULED MAINTENANCE ACTIVITIES. SEE APPENDIX A OF THE 767 MAINTENANCE PLANNING DATA (MPD) DOCUMENT,D622T001, FOR A DESCRIPTION OF THE COMPONENT CHANGE CARDS.

1. General

   A. This procedure removes and installs the EEC alternator (N2 Transducer) stator and rotor.

   B. The EEC alternator rotor and stator have different removal/installation procedures. You must remove the starter to get access to the EEC alternator. You must remove the stator to get access to the rotor.

   C. The EEC alternator is installed on the aft face of the main gearbox at the 6 o'clock position.

   D. You can get access to the EEC alternator through the thrust reverser halves.

2. Remove the EEC Alternator Stator

   A. Equipment

      (1) Torque Adapter PWA 85749 (Optional)

   B. References

      (1) AMM 71-11-04/201, Fan Cowl Panels

      (2) AMM 71-11-06/201, Core Cowl Panels

BOEING PROPRIETARY - Copyright (C) - Unpublished Work - See title page for details.

MECH	INSP

(3) AMM 78-31-00/201, Thrust Reverser System

(4) AMM 80-11-01/401, Pneumatic Starter

C. Prepare to Remove the EEC Alternator Stator

(1) Open these circuit breakers on the overhead circuit breaker panel, P11, and attach the DO-NOT-CLOSE tags:

(a) 11D7, ENGINE STBY IGN 1

(b) 11D8, ENGINE STBY IGN 2

(2) For the left engine, open these circuit breakers on the overhead circuit breaker panel, P11, and attach the DO-NOT-CLOSE tags:

(a) 11M1, L IGN 1

(b) 11M9, LEFT ENGINES BUS PWR SENSE

(c) 11M28, L IGN 2

(3) For the right engine, open these circuit breakers on the overhead circuit breaker panel, P11, and attach the DO-NOT-CLOSE tags:

(a) 11M2, R IGN 1

(b) 11M29, R IGN 2

(c) 11M36, RIGHT ENGINE BUS PWR SENSE

WARNING: DO THE THRUST REVERSER DEACTIVATION PROCEDURE TO PREVENT THE OPERATION OF THE THRUST REVERSER. THE ACCIDENTAL OPERATION OF THE THRUST REVERSER CAN CAUSE INJURIES TO PERSONS OR DAMAGE TO EQUIPMENT.

(4) Do the deactivation procedure for the thrust reverser for ground maintenance (AMM 71-11-04/201).

(5) Open the fan cowl panels (AMM 71-11-04/201).

(6) Open the core cowl panels (AMM 71-11-06/201).

BOEING PROPRIETARY - Copyright (C) - Unpublished Work - See title page for details.

MECH	INSP

WARNING: OBEY THE INSTRUCTIONS IN THE PROCEDURE TO OPEN THE THRUST REVERSERS. IF YOU DO NOT OBEY THE INSTRUCTIONS, INJURIES TO PERSONS OR DAMAGE TO EQUIPMENT CAN OCCUR.

(7) Open the thrust reversers (AMM 78-31-00/201).

D. Remove the EEC Alternator Stator (Fig. 401 and 402) SAS

NOTE: For EEC Alternator Rotor Replacement on-wing, the preferred method is to replace the complete EEC Alternator Drive Gearshaft and Bearing Assembly according to 72-61- 14. The instructions below may be used as an alternate method. SAS SAS SAS SAS SAS SAS

(1) Remove the Pneumatic Starter (AMM 80-11-01/401).

(2) If necessary, to get easier access to the EEC alternator stator (12), remove the deoiler outlet tube (57) as follows:

(a) Remove the three bolts (49) which attach the deoiler outlet tube (57) to the rear of the main gearbox.

(b) ENGINES POST-PW-SB 72-375;
Do the steps that follow:

1) Disconnect the stator cables (8) from the clips in the bracket (50) that is attached to the flange of the deoiler outlet tube (57).

2) Remove the bracket (50) from the flange of the tube (57).

(c) Remove the bolts (51, 54), nuts (52), and clamps (53) which attach the deoiler outlet tube (57) to the M and N flanges.

(d) Loosen the clamp (58) which attaches the main filter oil tube (59) to the front flange of the deoiler outlet tube (57).

(e) Move the bracket (60) away from the flange of the deoiler outlet tube (57).

(f) Remove the deoiler outlet tube (57).

(g) Remove and discard the packing (61).

BOEING PROPRIETARY - Copyright (C) - Unpublished Work - See title page for details.

MECH	INSP

(h) Install protection caps on the ends of the deoiler outlet tubes (57).

(3) If it is necessary, to get easier access to the EEC alternator stator (12), remove the exciter-to-igniter as follows:

WARNING: MAKE SURE THE ELECTRICAL POWER IS REMOVED FROM THE SYSTEM FOR 3 MINUTES BEFORE YOU REMOVE THE CABLE. GROUND THE CABLE TERMINALS AGAINST THE IGNITER PLUG HOUSING AFTER YOU DISCONNECT THE CABLE. MAKE SURE THAT THE IGNITION EXCITER IS FREE FROM ELECTRICAL POWER BEFORE YOU REMOVE THE CABLE. ELECTRICAL POWER TO THE IGNITION SYSTEM IS AT A VERY HIGH VOLTAGE AND CAN CAUSE BAD INJURY TO PERSONS.

(4) Disconnect the cable (40) from the lower igniter plug (39).

(a) Loosen the clamp (44) which attaches the heat shields (41, 43) on the cable (40).

(b) Remove the heat shields (41, 43).

(c) Disconnect the coupling nut (42) which attaches the cable (40) to the igniter plug (39).

(d) Ground the cable (40) against the igniter plug boss.

(e) Attach the end of the cable (40) away from the igniter plug (39).

(5) Remove the screws (2, 6) and bolt (3) from the heat shield (1).

(6) Remove the heat shield (1) from the engine.

(7) Disconnect the electrical connectors (7, 8) from the cables (9) of the EEC alternator stator at the bracket (16) on the lower left side of the gearbox.

NOTE: You can use the PWA 85749 torque adapter to disconnect the electrical connectors.

(a) Install the protection caps to the electrical connectors.

(8) Remove the bolts (13, 14) which attach the stator cable connectors (37, 38) and the retaining plate (15) to the bracket (16).

BOEING PROPRIETARY - Copyright (C) - Unpublished Work - See title page for details.

MECH | INSP

(9) Remove the retaining plate (15).

(10) Remove the cables (9) from the spring clips (10) on the rear face of the gearbox.

(11) Loosen the hose clamp (25) for the cooling air tube (24) located on the right side of the stator (12).

(12) Disconnect this cooling air tube (24) from the EEC alternator stator (12).

(13) ENGINES POST-PW-SB 72-375;
Do these steps:

(a) Loosen the hose clamp (25) for the cooling air tube (24) located at the bottom of the stator (12).

(b) Remove the bolts and/or nuts from the clamps that attach the cooling air tube to the brackets on the gearbox, oil tank, and diffuser case.

(c) Move the tube away from the EEC alternator.

NOTE: The clamps can stay with the tube.

(d) Remove the bolts (17) and washers (18) which attach the stator (12) to the EEC alternator drive pad.

(e) Remove the stator (12) from the gearbox.

1) Discard the packing (19).

(14) ENGINES PRE-PW-SB 72-375;
Do these steps:

(a) Remove the clamp (26) and bolt (27) from the cable (9).

(b) Remove the bolts (17) which attach the EEC alternator stator (12) and the heat shield (11) to the gearbox.

(c) Remove the EEC alternator stator (12) and the heat shield (11) from the gearbox.

1) Discard the packing (19).

BOEING PROPRIETARY - Copyright (C) - Unpublished Work - See title page for details.

MECH	INSP

(15) Install the protection caps on the EEC alternator drive pad and the open end of the stator.

3. Remove the EEC Alternator Rotor

A. Equipment

(1) PWA 85238 - Wrench holder (engines PRE-PW-SB 72-375), Pratt & Whitney

(2) PWA 86603 - Adapter, Wrench (engines POST-PW-SB 72-375), Pratt & Whitney

(3) PWA 85931 - Puller (engines PRE-PW-SB 72-375), Pratt & Whitney

(4) PWA 86551 - Puller (engines POST-PW-SB 72-375), Pratt & Whitney

B. Remove the EEC Alternator Rotor (Fig. 403)

(1) Do the task to remove the EEC Alternator Stator.

(2) Use the PWA 85238 wrench holder or PWA 86603 wrench adapter (30) to loosen the rotor locknut (23) with the steps that follow:

NOTE: The following steps refer to the PWA 85238 wrench holder or the PWA 86603 wrench adapter. The wrench holder is for engines without PW SB 72-375 and the wrench adapter is for engines with PW SB 72-375. "PWA wrench" is used to describe both types in this procedure.

(a) Loosen the jamnuts (31).

(b) Retract the wrench detail (32) from the body of the wrench (30).

(c) Install the handle (34) above the mating lug of the wrench detail (32).

(d) Put the body of the wrench (30) above the gear shaft (20) and on the housing pad of the gear shaft.

1) Align the bolt holes.

(e) Engage the lugs (35) of the wrench detail (32) with the mating slots in the gear shaft (20).

BOEING PROPRIETARY - Copyright (C) - Unpublished Work - See title page for details.

MECH | INSP

(f) Attach the body of the wrench (30) with the bolts (33) which are included with the PWA wrench.

(g) Install the wrench detail (32) tightly on the gear shaft (20) with the jamnuts (31).

(h) Engage the lugs (29) of the handle with the mating lugs on the nut (23).

(i) Turn the handle (34) to loosen the nut (23).

NOTE: You must do this in many steps because you cannot move the handle too much. You must remove the handle and install it on the nut again.

(j) Remove the bolts (33) which attach the wrench (30) to the gearbox.

(k) Remove the wrench (30).

(3) Remove the locknut (23) which attaches the EEC alternator rotor (21) to the gear shaft (20).

(4) ENGINES PRE-PW-SB 72-375;
Remove the lock ring (22) from the gear shaft (20).

(5) Install the PWA puller with the steps that follow:

(a) Retract the hexagon head bolt on the rotor puller.

(b) Loosen the two socket head screws.

(c) ENGINES PRE-PW-SB 72-375;
Put the two puller jaws on the rotor (3).

(d) ENGINES POST-PW-SB 72-375;
Put the two puller jaws in the puller groove on the rotor (3).

(e) Push the constraining ring on and against the puller jaws shoulder.

(f) Tighten the two socket head screws.

BOEING PROPRIETARY - Copyright (C) - Unpublished Work - See title page for details.

MECH | INSP

(6) Tighten the hexagon head bolt until the rotor comes away from the drive shaft.

NOTE: The puller and rotor can turn when you tighten the hexagon head bolt. If you hold a rod or a punch in one of the holes in the puller jaws while the bolt is tightened, the rotor will not turn.

(7) Remove the rotor (3) and puller from the drive shaft.

(8) Remove the rotor (3) from the puller with the steps that follow:

(a) Loosen the hexagon head bolt.

(b) Loosen the two socket head screws.

(c) Pull the constraining ring from the puller jaws shoulder.

(d) Remove the rotor (3) from the puller.

(9) Install the protection cover on the EEC alternator drive pad.

4. Install the EEC Alternator Rotor

A. Equipment

(1) PWA 85238 - Wrench holder (engines without PW SB 72-375)

(2) PWA 86603 - Adapter, wrench (engines with PW SB 72-375)

B. Consumable Materials

(1) D00137 Engine Oil - PWA 521

C. Parts

D. References

(1) AMM 70-50-00/201, Standard Torque Values

E. Install the EEC Alternator Rotor (Fig. 403)

(1) Remove the protection covers.

BOEING PROPRIETARY - Copyright (C) - Unpublished Work - See title page for details.

MECH	INSP

CAUTION: DO NOT USE INDUCTION HEATING TO ASSEMBLE THE ROTOR ASSEMBLY FOR THE EEC ALTERNATOR. INDUCTION HEATING CAN DAMAGE THE MAGNETIC MATERIAL IN THE ROTOR.

(2) Install the EEC alternator rotor (21) on the gear shaft (20).

(a) Make sure the EEC alternator rotor (21) is fully against the gear shaft (20).

(3) ENGINES PRE-PW-SB 72-375;
Install the lock ring (22) on the gear shaft (20) as follows:

(a) Align the ID flats on the lock ring (22) with the flats on the gear shaft (20).

(b) Engage the pins on the lock ring (22) with the holes in the EEC alternator rotor (21).

(4) Lubricate the threads of the locknut with engine oil.

(5) Install the nut (23) on the drive shaft.

(6) Install the PWA 85238 wrench holder or PWA 86603 wrench adapter.

NOTE: The following steps refer to the PWA 85238 wrench holder or the PWA 86603 wrench adapter. The wrench is for engines PRE-PW-SB 72-375 and the adapter is for engines POST-PW-SB 72-375. "PWA wrench" is used to describe both types in this procedure.

(7) Use the PWA wrench to tighten the locknut (23) with the steps that follow:

NOTE: When you use the PWA wrench, the torque wrench value is less than the torque which is necessary (AMM 70-50-00/201).

(a) Loosen the jamnuts (31).

(b) Retract the wrench detail (32) from the body of the PWA wrench (30).

BOEING PROPRIETARY - Copyright (C) - Unpublished Work - See title page for details.

MECH | INSP

(c) Install the handle (34) above the mating lug (35) of the wrench detail (32).

1) Make sure the lug end of the handle (34) points out.

(d) Put the body of the PWA wrench (30) above the gear shaft (20) and on the housing pad for the gear shaft.

1) Make sure you align the bolt holes.

(e) Engage the lugs (35) of the wrench detail (32) with the mating slots in the gear shaft (20).

(f) Attach the body of the wrench (30) with the bolts (33) which are included with the PWA wrench assembly.

(g) Install the wrench detail (32) tightly on the gear shaft (20).

(h) Attach the wrench detail (32) with the jamnuts (31).

(i) Engage the lugs of the handle for the PWA wrench with the mating lugs on the locknut to tighten the nut.

CAUTION: WHEN YOU USE THE PWA WRENCH, YOU MUST ADJUST THE TORQUE WRENCH VALUE. IF YOU DO NOT ADJUST THE TORQUE WRENCH VALUE, YOU WILL USE AN INCORRECT TORQUE WHICH CAN CAUSE DAMAGE TO THE THREADS OF THE NUT.

(j) Adjust the torque wrench value as necessary (AMM 70-50-00/201).

(k) Tighten the locknut (23) to 675-800 pound-inches (76.265-90.388 newton-meters).

NOTE: You must do this in many steps because the handle cannot move too much. You must remove the handle from the nut and install it to the nut again.

(l) Loosen the locknut (23) to 0 torque.

(m) Tighten the locknut (23) to 675-800 pound-inch (76.3-90.4 newton-meters).

(8) Remove the bolts which attach the PWA wrench to the drive pad.

BOEING PROPRIETARY - Copyright (C) - Unpublished Work - See title page for details.

(9) Remove the PWA wrench.

(10) Do the task which follows to install the EEC alternator stator.

5. Install the EEC Alternator Stator

A. Equipment

(1) Torque Adapter PWA 85749 (Optional)

B. Consumable Materials

(1) D00137 Engine Oil - PWA 521

(2) D00504 Petrolatum - PMC-9609

(3) D50124 Anti-seize paste - PWA 36246

(4) D00333 Antiseize Compound - PMC 9523, Molykote, Type Z

C. Parts

AMM		NOMENCLATURE	AIPC		
FIG	ITEM		SUBJECT	FIG	ITEM
401	61	Packing	79-23-00	20	35
402	12	Stator	73-21-05	15	25
	19	Packing			30

D. References

(1) AMM 70-24-05/201, Electrical Harnesses

(2) AMM 71-00-00/501, Power Plant

(3) AMM 71-11-04/201, Fan Cowl Panels

(4) AMM 71-11-06/201, Core Cowl Panels

(5) AMM 78-31-00/201, Thrust Reverser System

(6) AMM 80-11-01/401, Pneumatic Starter

BOEING PROPRIETARY - Copyright (C) - Unpublished Work - See title page for details.

MECH	INSP

E. Install the EEC Alternator Stator (Fig. 401 and 402)

(1) Remove the protection covers.

(2) Lubricate the new packing (19) with petrolatum.

(3) Install the packing (19) on the EEC alternator stator (12).

(4) Align the bolt holes in the EEC alternator stator (12) with the bolt holes on the gearbox.

(5) Carefully install the EEC alternator stator (12) on the EEC alternator rotor (21).

(6) Lubricate the threads of the bolts (17) with the anti-seize paste.

(7) ENGINES PRE-PW-SB 72-375;
Do these steps:

(a) Put the heat shield (11) above the stator (12).

(b) Attach the stator (12) and the heat shield (11) to the EEC alternator drive pad with the bolts (17) and washers (18).

(c) Tighten the bolts (17) to 62-72 pound-inch (7.0-8.1 newton-meters).

(8) ENGINES POST-PW-SB 72-375;
Do these steps:

(a) Attach the stator (12) to the EEC alternator drive pad with the bolts (17) and washers (18).

(b) Tighten the bolts (17) to 62-72 pound-inch (7.0-8.1 newton-meters).

(c) Use a 0.003 inch (0.076 mm) feeler guage to make sure the clearance between the EEC alternator (12) and the EEC Alternator Drive Pad is satisfactory.

1) If the feeler guage can go in the clearance, you must do a check of the torque of the bolts (17).

2) If the bolts are at the maximum torque and the EEC alternator stator (12) is not installed correctly, remove and install the stator (12) again.

BOEING PROPRIETARY - Copyright (C) - Unpublished Work - See title page for details.

3) Use the feeler guage again to make sure the clearance is satisfactory.

(9) Install the cable connectors (37, 38) to the bracket (16) on the lower left side of the gearbox.

(a) While you make sure the spacers point to the bracket (16), install the retaining plate (15) on the flanges of the cable connectors (37, 38).

(10) Lubricate the bolt (13) with the anti-seize paste and the bolt (14) with oil.

(11) Attach the retaining plate (15) to the bracket (16) with the bolts (13, 14).

(a) Tighten the bolt (13) to 62-72 pound-inches (7.005-8.135 newton-meters).

(b) Tighten the bolt (14) to 36-40 pound-inches (4.067-4.519 newton-meters).

(12) Attach the cables (9) to the spring clips (10).

(13) Connect the air cooling tube (24) and the clamp (25) on the right side of the EEC alternator stator (12).

(14) ENGINES PRE-PW-SB 72-375;
Do these steps:

(a) Lubricate the threads of the bolt (27) with oil.

(b) Install the clamp (26) to the lower cable.

(c) Attach the clamp (26) to the bracket below the EEC alternator stator (12) with the bolt (27).

(d) Tighten the bolt (27) to 36-40 pound-inches (4.067-4.519 newton-meters).

(15) ENGINES POST-PW-SB 72-375;
Do these steps:

(a) Install the cooling air tube for the bottom of the EEC alternator to brackets on the gearbox, oil tank, and diffuser case.

BOEING PROPRIETARY - Copyright (C) - Unpublished Work - See title page for details.

MECH | INSP

(b) Lubricate the threads of the bolt with engine oil.

(c) Use the clamps that stayed with the tube and attach the tube to the brackets with the clamps, bolts, and/or nuts.

(d) Tighten the bolts to 36 to 40 pound-inch (4.1-4.5 newton-meters).

CAUTION: USE THE CORRECT ASSEMBLY PROCEDURE, AND TOOLS, FOR THE HARNESS CONNECTOR INSTALLATION (AMM 70-24-05/201). IF YOU USE THE INCORRECT ASSEMBLY PROCEDURE, OR TOOLS, A DAMAGED OR LOOSE CONNECTOR CAN OCCUR. A LOOSE CONNECTOR PERMITS VIBRATION, WHICH CAUSES THE CONTACTS TO WEAR AND DECREASES THE LIGHTNING PROTECTION.

(16) Connect the harness connectors (7, 8) to the stator cable connectors (37, 38) (AMM 70-24-05/201).

NOTE: You can tighten the electrical connectors (7, 8) with the PWA 85749 torque adapter.

(17) Connect the cable (40) for the exciter-to-igniter plug to the lower igniter plug (39).

(a) Tighten the nut to 140-160 pound-inches (15.8-18.1 newton-meters).

NOTE: If you do not sufficiently tighten the coupling nut, it can cause ignition noise which can cause an effect on the airplane radio equipment.

(b) Install the heat shield (41, 43) on the cable (40).

(c) Bend the tabs of the heat shields (41, 43) into the groove in the igniter plug boss of the heat shield, which is attached, with the clamp (44).

1) Tighten the clamp screw to 40-45 pound-inches (4.5-5.1 newton-meters).

(d) Attach the cable (40) of the exciter-to-igniter plug and clamp (47) to the bracket (48) with the bolt (45) and nut (46).

BOEING PROPRIETARY - Copyright (C) - Unpublished Work - See title page for details.

1) Tighten the bolt (45) to 36-40 pound-inches (4.067-4.519 newton-meters).

(18) Install the deoiler outlet tube (57) as follows:

(a) Remove the protection caps from the ends of the deoiler outlet tube (57).

(b) Install a new packing (61), lubricated with engine oil, on the forward flange groove on the deoiler outlet tube (57).

(c) Put the deoiler outlet tube (57) on the doiler outlet port on the rear of the main gearbox.

(d) Put the brackets (50, 60) on the flange of the deoiler outlet tube (57).

(e) Install the three bolts (49), threads lubricated with engine oil, which attach the deoiler outlet tube (57) to the rear of the main gearbox.

1) Tighten the three bolts (49) with your hand.

(f) Install the bolts (51, 54), nuts (52), and clamps (53) which attach the deoiler outlet tube (57) to the M and N flanges.

1) Tighten the clamp bolts (51, 54) to 36-40 pound-inches (4.067-4.519 newton-meters).

(g) Tighten the three bolts (49), which attach the deoiler outlet tube (57) to the main gearbox, to 62-72 pound-inches (7.005-8.135 newton-meters).

(h) Tighten the clamp (58) which attaches the main filter oil tube (59) to the front flange of the deoiler outlet tube (57) to 36-40 pound-inches (4.067-4.519 newton-meters).

(i) Connect the stator cables (8) to the clips on the bracket (50) that is attached to the flange of the deoiler outlet tube (57).

(19) Install the Pneumatic Starter (AMM 80-11-01/401).

F. Put the Airplane Back to Its Usual Condition

BOEING PROPRIETARY - Copyright (C) - Unpublished Work - See title page for details.

MECH	INSP

WARNING: OBEY THE INSTRUCTIONS IN THE PROCEDURE TO CLOSE THE THRUST REVERSERS. IF YOU DO NOT OBEY THE INSTRUCTIONS, INJURIES TO PERSONS OR DAMAGE TO EQUIPMENT CAN OCCUR.

(1) Close the thrust reversers (AMM 78-31-00/201).

(2) Close the core cowl panels (AMM 71-11-06/201).

(3) Close the fan cowl panels (AMM 71-11-04/201).

(4) Do the activation procedure for the thrust reversers (AMM 78-31-00/201).

(5) Remove the DO-NOT-CLOSE tags and close these circuit breakers on the P11:

(a) 11D7, ENGINE STBY IGN 1

(b) 11D8, ENGINE STBY IGN 2

(6) For the left engine, remove the DO-NOT-CLOSE tags and close these circuit breakers on the P11 panel:

(a) 11M1, L IGN 1

(b) 11M9, LEFT ENGINES BUS PWR SENSE

(c) 11M28, L IGN 2

(7) For the right engine, remove the DO-NOT-CLOSE tags and close these circuit breakers on the P11 panel:

(a) 11M2, R IGN 1

(b) 11M29, R IGN 2

(c) 11M36, RIGHT ENGINE BUS PWR SENSE

(8) Do the test of the EEC alternator that is shown in the Power Plant Test Reference Table (AMM 71-00-00/501).

BOEING PROPRIETARY - Copyright (C) - Unpublished Work - See title page for details.

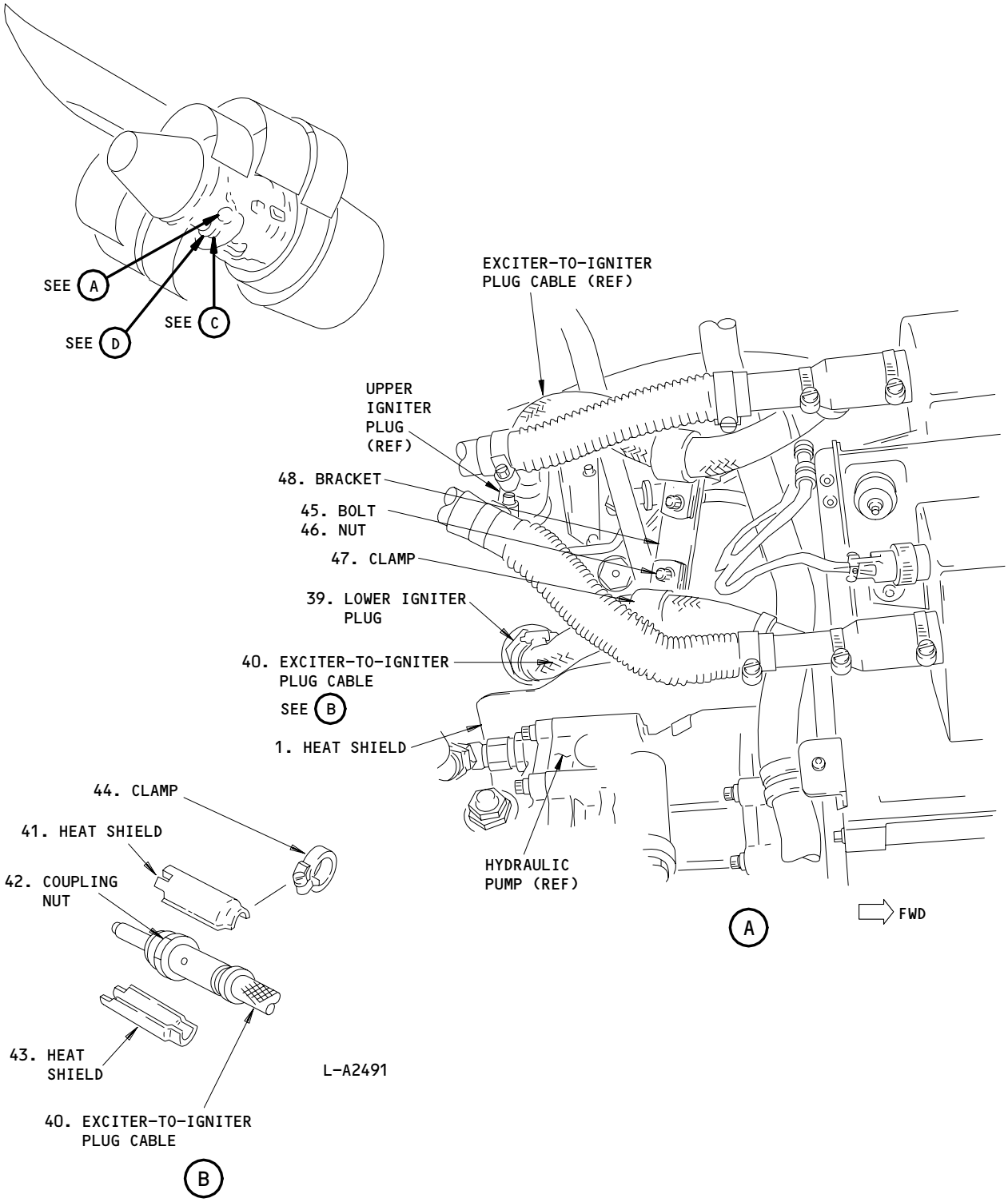

EEC Igniter Plug and Heat Shield Installation
Figure 401 (Sheet 1)

BOEING PROPRIETARY - Copyright (C) - Unpublished Work - See title page for details.

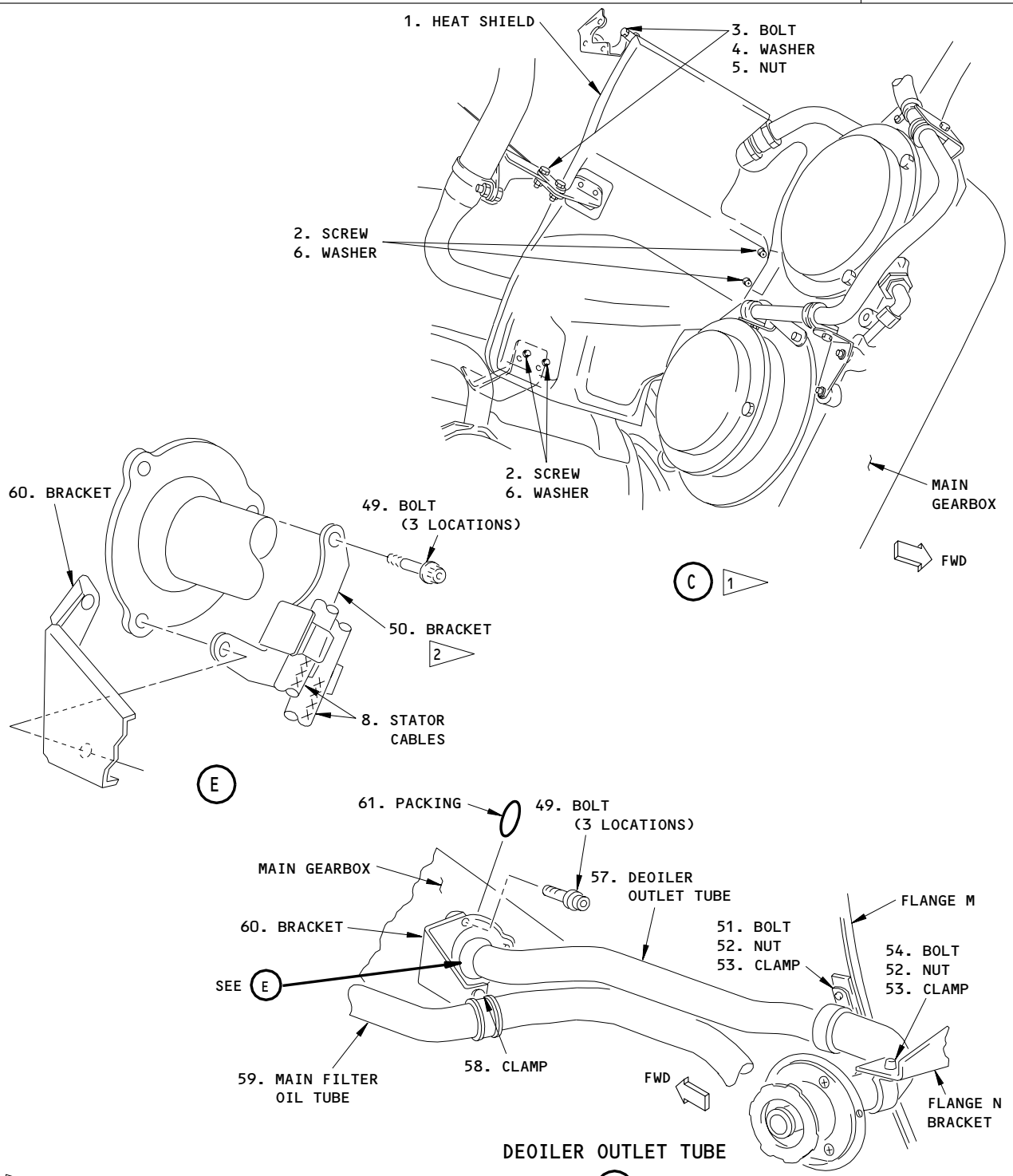

1 HYDRAULIC PUMP NOT SHOWN FOR CLARITY

2 ENGINES POST-PW-SB 72-375

EEC Igniter Plug and Heat Shield Installation
Figure 401 (Sheet 2)

BOEING PROPRIETARY - Copyright (C) - Unpublished Work - See title page for details.

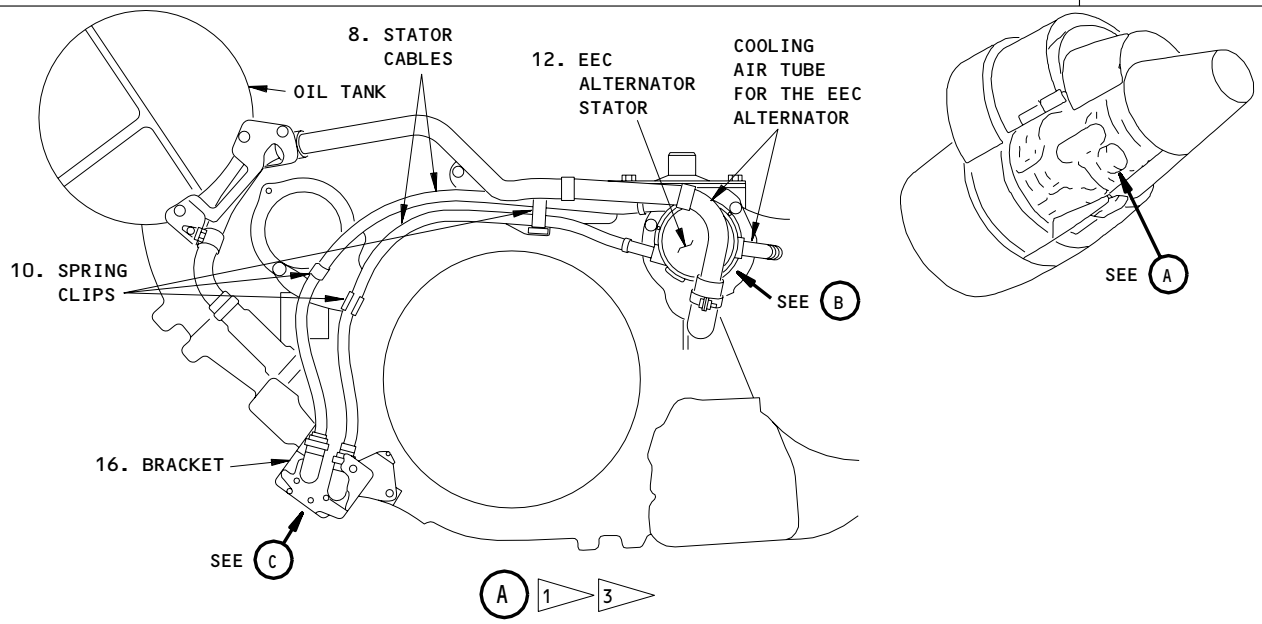

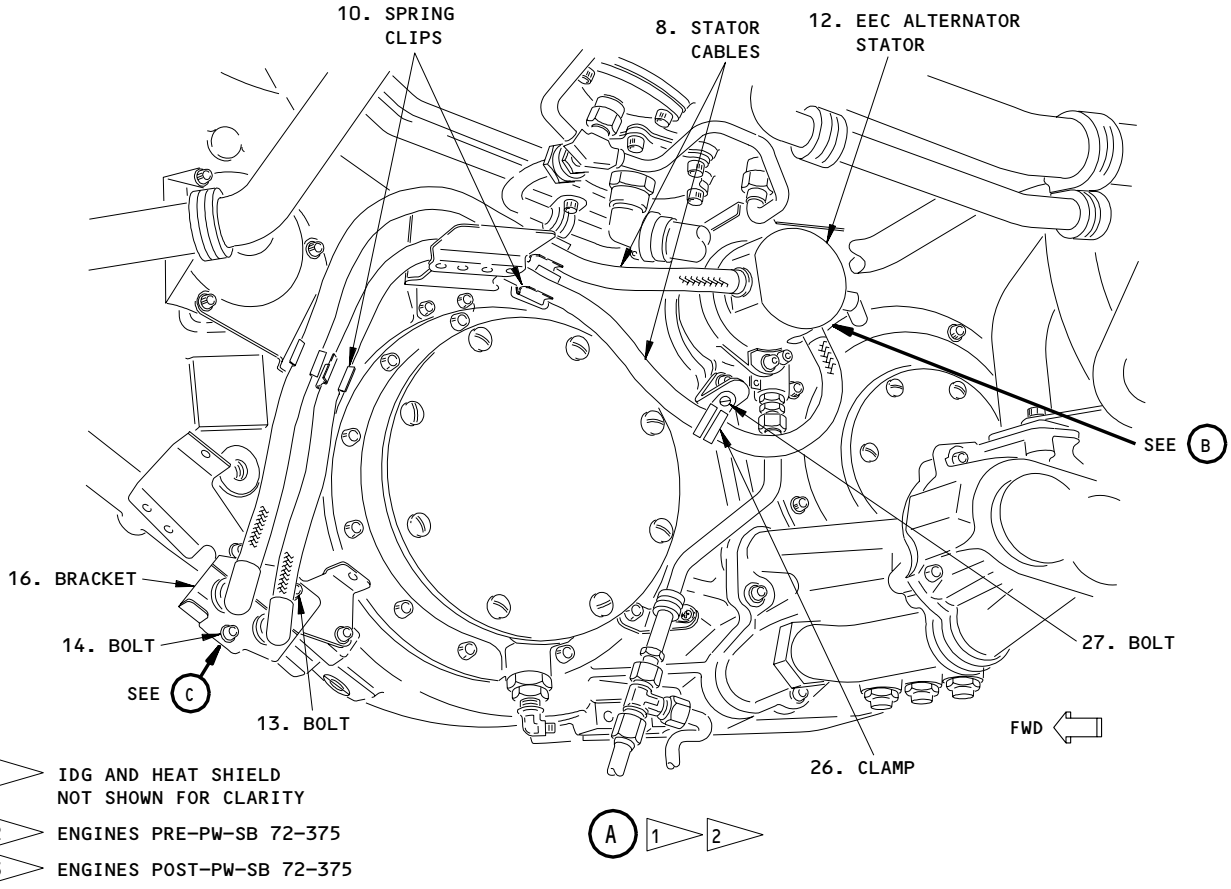

1 IDG AND HEAT SHIELD NOT SHOWN FOR CLARITY

2 ENGINES PRE-PW-SB 72-375

3 ENGINES POST-PW-SB 72-375

EEC Alternator (N2 Transducer) Stator Installation
Figure 402 (Sheet 1)

BOEING PROPRIETARY - Copyright (C) - Unpublished Work - See title page for details.

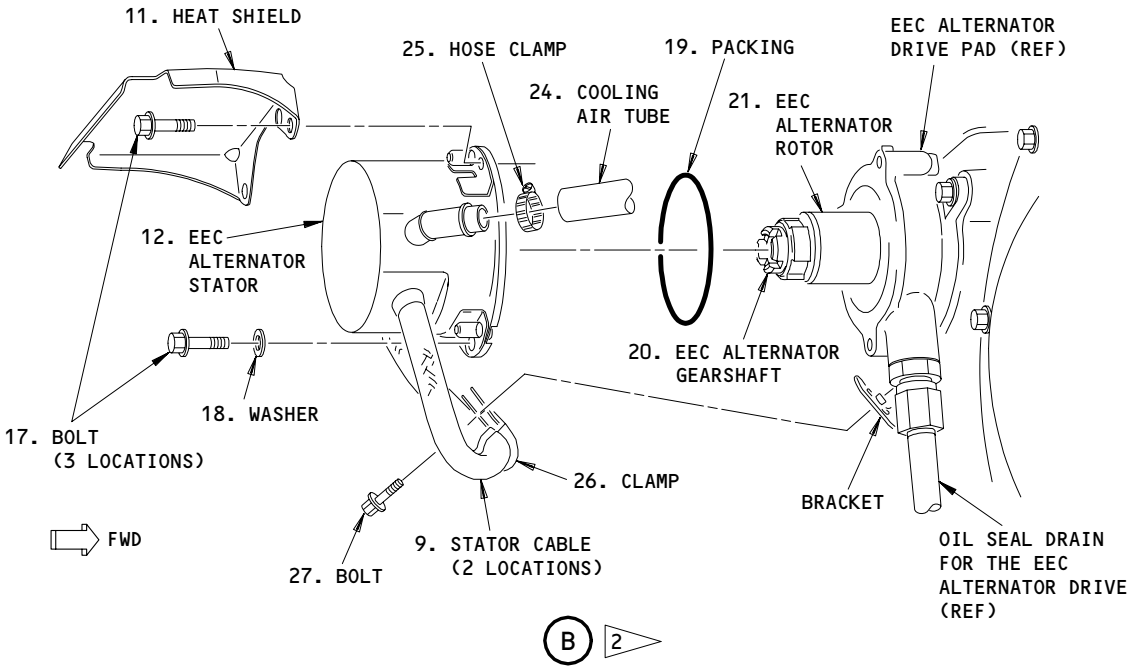

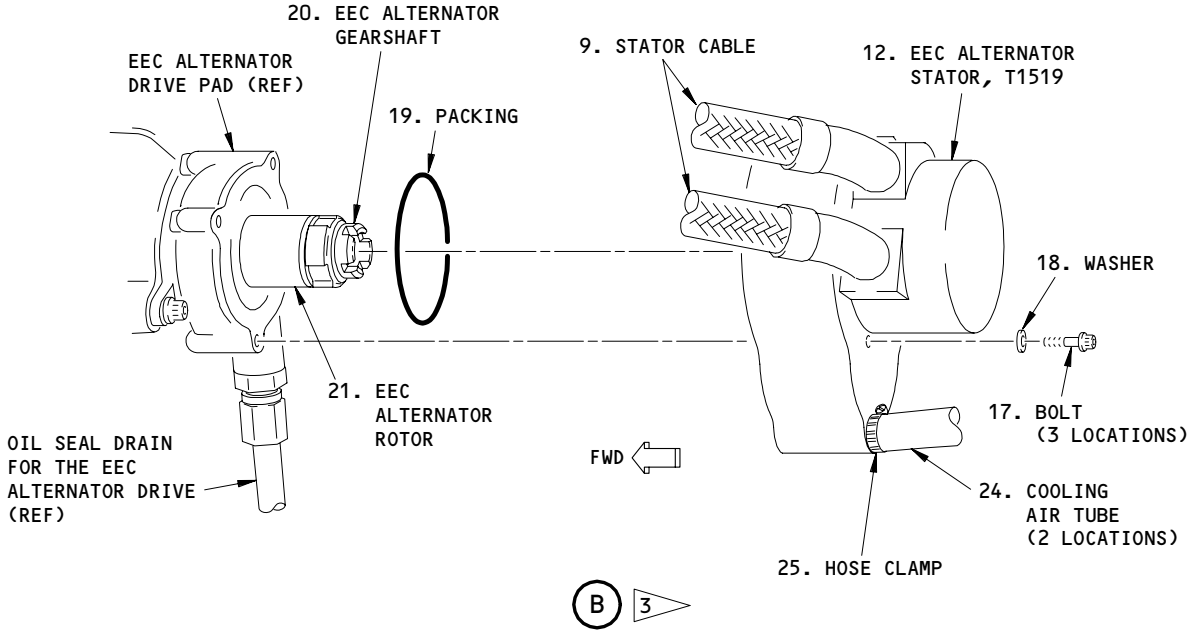

EEC Alternator (N2 Transducer) Stator Installation
Figure 402 (Sheet 2)

BOEING PROPRIETARY - Copyright (C) - Unpublished Work - See title page for details.

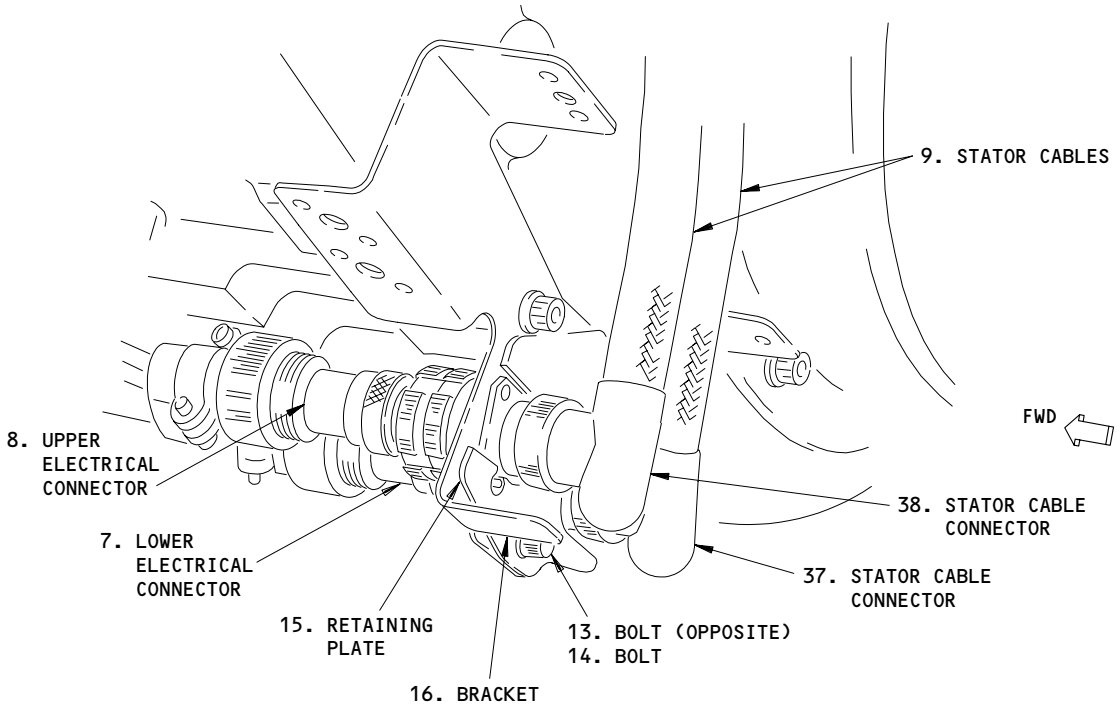

C

EEC Alternator (N2 Transducer) Stator Installation
Figure 402 (Sheet 3)

BOEING PROPRIETARY - Copyright (C) - Unpublished Work - See title page for details.

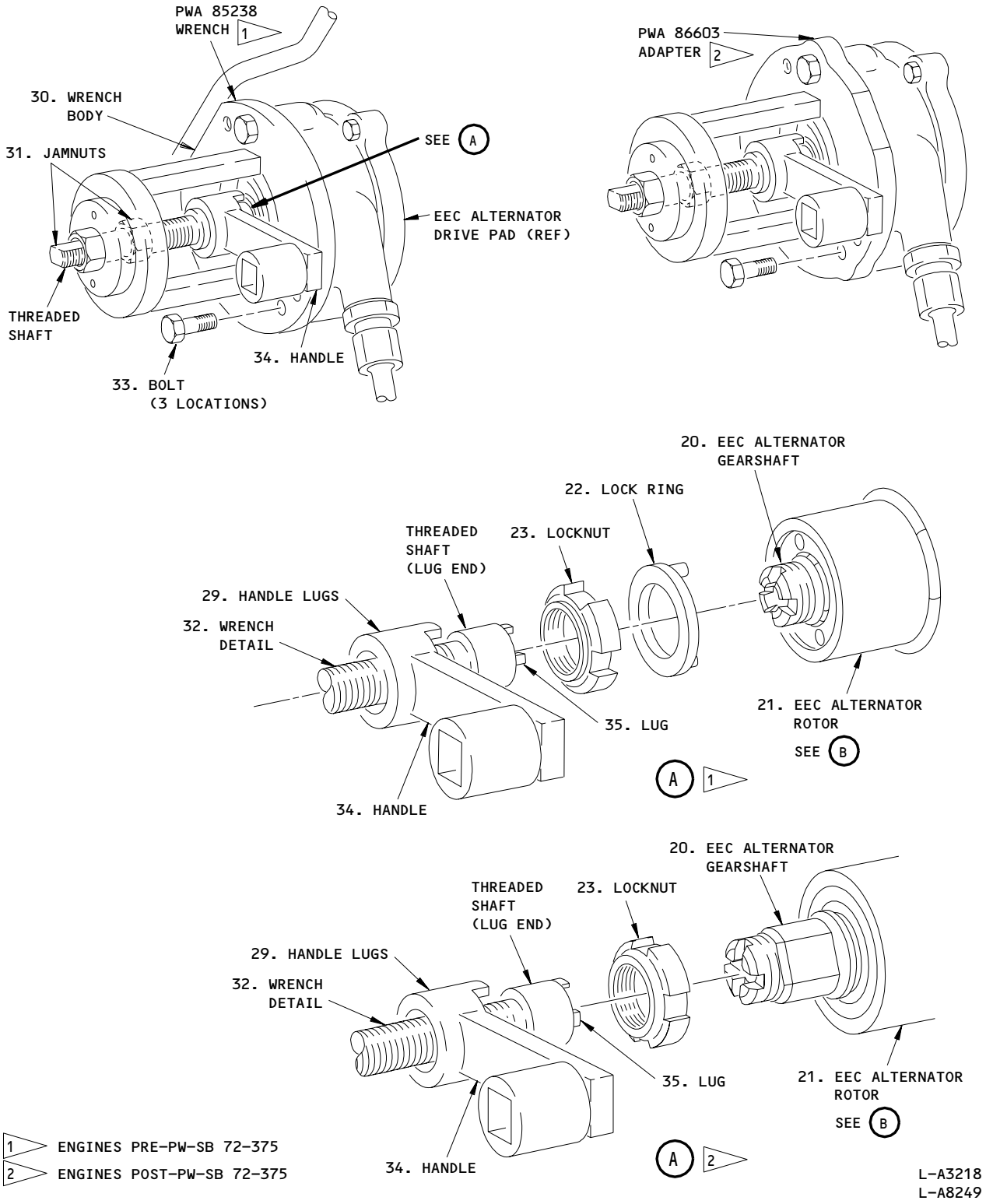

EEC Alternator (N2 Transducer) Rotor Installation
Figure 403 (Sheet 1)

BOEING PROPRIETARY - Copyright (C) - Unpublished Work - See title page for details.

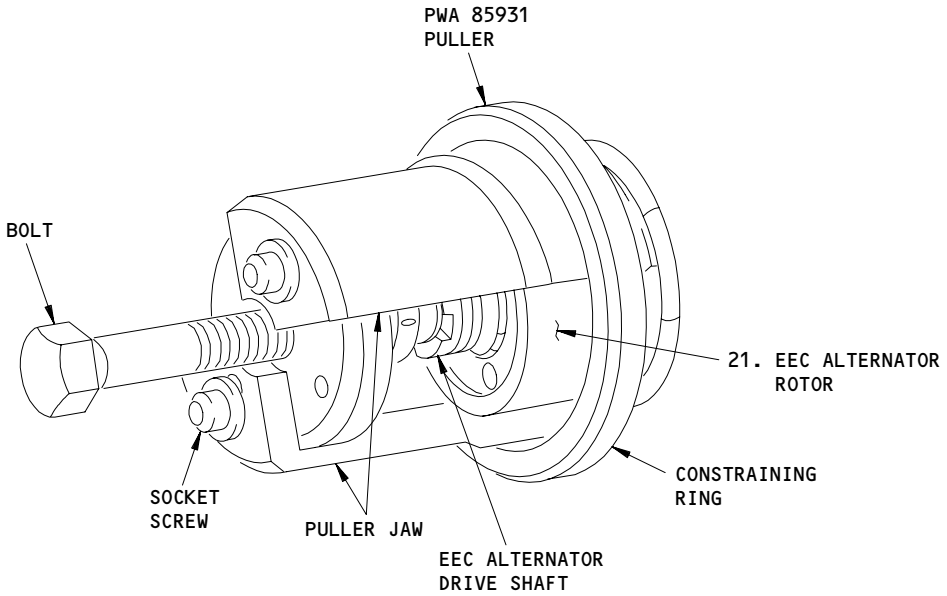

PWA 85931 PULLER

B 1

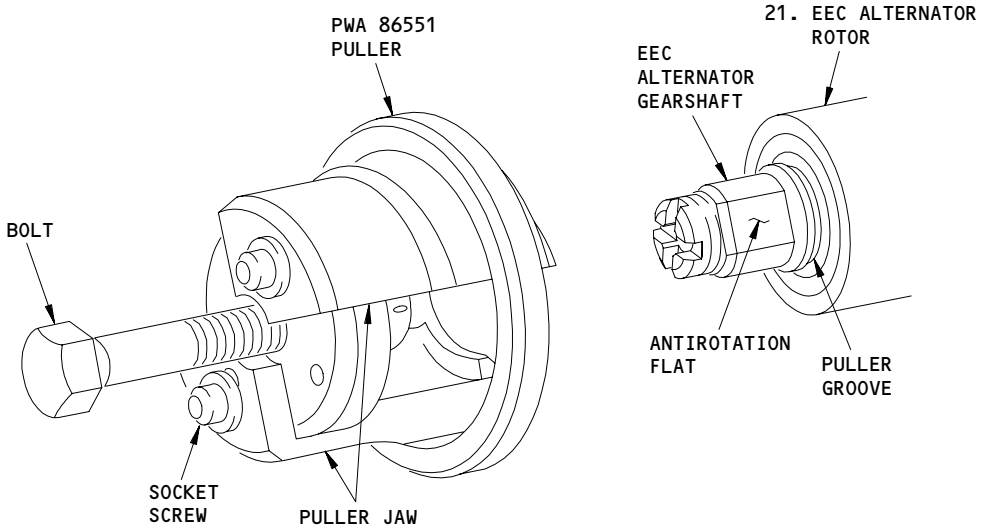

PWA 86551 PULLER

B 2

L-A3218
L-A8250

EEC Alternator (N2 Transducer) Rotor Installation
Figure 403 (Sheet 2)

BOEING PROPRIETARY - Copyright (C) - Unpublished Work - See title page for details.

STATION		BOEING CARD NO.
TAIL NO.	SAS BOEING 767 TASK CARD	73-401-01-1
DATE		AIRLINE CARD NO.

SKILL	WORK AREA	RELATED TASK	INTERVAL	PHASE	MPD REV	TASK CARD REVISION
ENGIN	ENGINE 1		1C	11212	005	APR 22/08

TASK	TITLE	STRUCTURAL ILLUSTRATION REFERENCE	APPLICABILITY AIRPLANE	APPLICABILITY ENGINE
REPLACE	ENGINE 1 FUEL PUMP FILTER ELEMENT		ALL	4000

ZONES	ACCESS PANELS
411	414AR 416AR 418AR

MECH	INSP	MPD ITEM NUMBER

VISUALLY CHECK THE ENGINE 1 FUEL PUMP FILTER ELEMENT FOR METALLIC PARTICLES AND REPLACE THE ELEMENT WITH A SERVICEABLE ELEMENT. N73-11-02-4A

1. General

   A. The fuel pump filter is attached to the bottom of the fuel pump. You can get access through the right thrust reverser.

2. Remove the Fuel Pump Filter (Fig. 401)

   A. Equipment

      (1) Container - 5 gallon (20 liters), to catch the fuel

   B. References

      (1) AMM 24-22-00/201, Electrical Power - Control

      (2) AMM 28-10-00/201, Microbial Growth

      (3) AMM 71-11-04/201, Fan Cowl Panels

      (4) AMM 71-11-06/201, Core Cowl Panels

      (5) AMM 73-11-01/401, Fuel Pump

      (6) AMM 73-11-02/601, Fuel Pump Filter

      (7) AMM 78-31-00/201, Thrust Reverser System

   C. Prepare to Remove the Fuel Pump Filter

      (1) Supply electrical power (AMM 24-22-00/201).

BOEING PROPRIETARY - Copyright (C) - Unpublished Work - See title page for details.

MECH | INSP

(2) Make sure that applicable engine and spar valves are closed as follows:

(a) For the left engine, make sure this circuit breaker on the main power distribution panel, P6, is closed:

1) 6E1, FUEL VALVES L SPAR

(b) For the left engine, make sure this circuit breaker on the overhead panel, P11, is closed:

1) 11D25, FUEL CONT VLV & EEC CHAN B RESET L

(c) Make sure that the applicable FUEL CONTROL switch is in the cutoff position.

(3) Make sure that the applicable ENG VALVE and SPAR VALVE panel lights on the control stand are off.

(4) For the left engine, open this circuit breaker on the main power distribution panel, P6, and attach the DO-NOT-CLOSE tag:

(a) 6E1, FUEL VALVES L SPAR

(5) For the left engine, open this circuit breaker on the overhead panel, P11, and attach the DO-NOT-CLOSE tag:

(a) 11D25, FUEL CONT VLV & EEC CHAN B RESET L

(6) Remove electrical power (AMM 24-22-00/201).

(7) Open the right fan cowl panel (AMM 71-11-04/201).

WARNING: DO THE THRUST REVERSER DEACTIVATION PROCEDURE TO PREVENT THE OPERATION OF THE THRUST REVERSER. THE ACCIDENTAL OPERATION OF THE THRUST REVERSER CAN CAUSE INJURY TO PERSONS OR DAMAGE TO EQUIPMENT.

(8) Do this procedure: Thrust Reverser Deactivation for Ground Maintenance (AMM 78-31-00/201).

(9) Open the right core cowl panel (AMM 71-11-06/201).

BOEING PROPRIETARY - Copyright (C) - Unpublished Work - See title page for details.

MECH	INSP

WARNING: OBEY THE INSTRUCTIONS IN AMM 78-31-00/201 WHEN YOU OPEN THE THRUST REVERSERS. IF YOU DO NOT OBEY THE INSTRUCTIONS, INJURY TO PERSONS OR DAMAGE TO EQUIPMENT CAN OCCUR.

(10) Open the right thrust reverser (AMM 78-31-00/201).

D. Procedure

(1) Drain the fuel from the fuel pump filter with the steps that follow:

(a) Put the container below the fuel filter cover (8).

WARNING: DO NOT LET THE FUEL STAY ON YOUR SKIN FOR A LONG PERIOD OF TIME. THE FUEL IS POISONOUS AND CAN BE ABSORBED THROUGH YOUR SKIN.

(b) Remove the drain plug (6) from the center of the fuel pump filter cover (8).

1) Let the fuel fully drain.

2) Discard the packing (7).

(2) Remove the fuel pump filter:

(a) ENGINES PRE-PW-SB 73-75 AND PRE-PW-SB 73-104;

Remove the fuel filter cover (8) with the steps that follow:

1) Remove the bolts (5) and washers (4) from the fuel filter cover (8).

2) Monitor the torque necessary to turn the bolts (5) out of the helicoil inserts in the fuel pump.

BOEING PROPRIETARY - Copyright (C) - Unpublished Work - See title page for details.

a) If the necessary torque is less than 6.5 pound-inches (0.73 Newton-meters), replace the fuel pump (AMM 73-11-01/401).

NOTE: If a replacement fuel pump is not available, you can use different bolts as specified in the Argo-Tech Component Maintenance Manual 73-11-04.

3) Remove the fuel filter cover (8) and the fuel pump filter (2).

(b) ENGINES POST-PW-SB 73-75 AND PRE-PW-SB 73-104;

Remove the fuel filter cover (8) with the steps that follow:

CAUTION: DO NOT PUT UNWANTED FORCE ON THE HEAD OF THE TORQUE-LIMITING BOLT. KEEP THE WRENCH STRAIGHT AND AT 90 DEGREES TO THE HEAD AND LOOSEN IT SLOWLY. IF YOU DO NOT OBEY THESE INSTRUCTIONS, YOU CAN CAUSE DAMAGE TO THE TORQUE-LIMITING BOLT.

1) Keep the wrench straight and at 90 degrees to the head of the torque-limiting bolt (13) and slowly loosen and remove the torque-limiting bolt (13) and washer (4).

2) Monitor the torque necessary to remove the torque-limiting bolt (13) from the helicoil self-locking quality.

a) If the torque is less than 6.5 pound-inches (0.73 newton-meters), replace the fuel pump (AMM 73-11-01/401).

NOTE: If a replacement fuel pump is not available, you can use different bolts as specified in the Argo-Tech Component Maintenance Manual 73-11-04.

3) Remove the nuts (9) and washers (10) from the dee-bolts (11).

4) Remove the fuel filter cover (8) and the fuel pump filter (2).

BOEING PROPRIETARY - Copyright (C) - Unpublished Work - See title page for details.

MECH | INSP

(c) ENGINES POST-PW-SB 73-104;

Remove the fuel filter cover (8) with the steps that follow:

1) Remove the nuts (9) and washers (10) from the dee-bolts (11) and the stud.

2) Remove the fuel filter cover (8) and the fuel pump filter (2) from the fuel pump (1).

NOTE: Some fuel filter covers have machined slot in the split surface. These machined slots will help you remove the fuel filter cover.

(d) Remove the packing (3) from the fuel filter cover (8).

1) Discard the packing (3).

(e) Examine the housing for the fuel pump filter and the fuel filter cover (8) to make sure the old gaskets from the fuel pump filter (2) are removed.

(f) Install a cover on the fuel pump to prevent contamination.

(3) Do the Inspection of the Fuel Pump Filter (AMM 73-11-02/601).

(a) Examine the fuel filter element for signs of microbial contamination.

NOTE: Microbial contamination may be evident in the filter as a dark colored sludge or slime but does not always have these characteristics. Microbial contamination can cause a blocked fuel filter and result in a fuel filter bypass condition.

1) If the fuel filter element has trapped fine debris of unknown origin, it is recommended you do the inspection of the fuel tanks for microbial contamination (AMM 28-10-00/201).

(b) Examine the fuel pump filter for bronze color particles (AMM 73-11-02/601).

3. Install the Fuel Pump Filter (Fig. 401)

BOEING PROPRIETARY - Copyright (C) - Unpublished Work - See title page for details.

MECH | INSP

A. Consumable Materials

(1) D00137, Oil - PWA 521

(2) D00504, Petrolatum - PMC 9609

(3) G01505 Lockwire, Safety and Lock - NASM20995

(4) G02332 Ferrule - P05-292 (Optional)

(5) G02335 Cable - Safety - P05-291 (Optional)

(6) G01025 Solvent - Cleaning - P11-004

B. Parts

AMM		NOMENCLATURE	AIPC		
FIG	ITEM		SUBJECT	FIG	ITEM
401	2	Filter	73-11-02	10	35, 38
	3	Packing			30
	7	Packing			10

C. References

(1) AMM 71-00-00/501, Power Plant

(2) AMM 71-11-04/201, Fan Cowl Panels

(3) AMM 71-11-06/201, Core Cowl Panels

(4) AMM 73-11-01/401, Fuel Pump

(5) AMM 78-31-00/201, Thrust Reverser System

D. Procedure

(1) Prepare to install the fuel pump filter:

(a) Remove the covers from the fuel pump.

(b) Clean the fuel filter cover (8) and the inner space of the fuel filter housing.

BOEING PROPRIETARY - Copyright (C) - Unpublished Work - See title page for details.

MECH	INSP

(c) Examine the helicoil insert(s) to make sure they are correctly installed in the recesses of the fuel pump filter housing.

(d) If the helicoil insert(s) are not in the fuel pump filter housing recesses, replace the fuel pump (1) (AMM 73-11-01/401).

CAUTION: MAKE SURE THE OLD GASKETS OF THE FUEL PUMP FILTER DO NOT STAY IN THE HOUSING FOR THE FUEL PUMP FILTER OR THE FUEL FILTER COVER. IF YOU DO NOT REMOVE THE OLD GASKETS, DAMAGE TO THE ENGINE CAN OCCUR.

(e) Examine the housing for the fuel pump filter and the fuel filter cover (8) to make sure the old gaskets from the fuel pump filter (2) are removed.

1) If necessary, remove the old gaskets.

CAUTION: DO NOT CLEAN THE FUEL FILTER OR USE THE SAME FUEL FILTER AGAIN. IF YOU DO NOT USE A NEW, CLEAN AND UNDAMAGED FUEL FILTER, DAMAGE TO THE ENGINE CAN OCCUR.

CAUTION: INSTALL THE CORRECT FUEL PUMP FILTER FOR THE ENGINE MODEL. LOOK AT THE FUEL PUMP FILTER TO FIND THE PART NUMBER AND ENGINE MODEL MARKS. IF THE FUEL PUMP FILTER IS INCORRECT FOR THE ENGINE MODEL, IT CAN CAUSE CONTAMINATION OF THE FUEL SYSTEM AND UNSATISFACTORY ENGINE OPERATION.

(2) Install the fuel pump filter:

(a) Lubricate the packing (3) with petrolatum.

(b) Install the packing (3) into the groove in the fuel filter cover (8).

(c) ENGINES PRE-PW-SB 73-75 AND PRE-PW-SB 73-104;

Install the fuel pump filter (2) with the steps that follow:

1) Clean the bolt (5) threads with solvent (P11-004) and dry the bolt (5) threads before installation.

BOEING PROPRIETARY - Copyright (C) - Unpublished Work - See title page for details.

MECH | INSP

2) ENGINES PRE-PW-SB 73-85;
Install a new fuel pump filter (2) on the fuel filter cover (8).

3) ENGINES POST-PW-SB 73-85;
Install a new fuel pump filter (2) onto the tapered pins of the fuel filter cover (8).

CAUTION: USE THE TIGHTENING PROCEDURE THAT FOLLOWS. THIS WILL PREVENT DAMAGE TO THE PACKING AND HELICOIL INSERTS, AND MAKE SURE THAT THE FUEL FILTER COVER IS CORRECTLY ALIGNED.

4) Install the fuel pump filter (2) and the fuel filter cover (8) to the fuel pump (1) with the bolts (5) and washers (4).

5) Monitor the torque necessary to turn the bolts (5) into the helicoil inserts.

a) Make a note of the torque value (Ta= _____).

6) Symmetrically tighten the bolts (5) to the value Tb where Tb = (150-170 pound-inches (16.9-19.2 newton-meters) + Ta).

7) Safety the bolts (5) with lockwire or safety cable and safety cable ferrule.

(d) ENGINES POST-PW-SB 73-75 AND PRE-PW-SB 73-104;

Install the fuel pump filter (8) with the steps that follow:

1) Clean the threads of the torque-limiting bolt (13) and the dee-bolts (11) with the solvent (P11-004).

a) Make sure the threads are dry before you install the bolts.

2) ENGINES PRE-PW-SB 73-85;
Install the fuel pump filter (2) on the fuel filter cover (8).

3) ENGINES POST-PW-SB 73-85;
Install the fuel pump filter (2) onto the tapered pins of the fuel filter cover (8).

BOEING PROPRIETARY - Copyright (C) - Unpublished Work - See title page for details.

4) Verify that the retaining rings (12) are properly placed on the Dee-bolts.

5) Attach the fuel pump filter (2) and the fuel filter cover (8) to the fuel pump (1) with the dee-bolts (11), washers (10), and nuts (9).

6) Install the torque-limiting bolt (13) and washer (4).

CAUTION: DO NOT TIGHTEN THE TORQUE-LIMITING BOLT BEFORE THE FUEL FILTER COVER IS FULLY ENGAGED INTO THE FUEL FILTER HOUSING. IF YOU TIGHTEN THE TORQUE-LIMITING BOLT BEFORE THE FUEL FILTER COVER IS FULLY ENGAGED, DAMAGE TO THE PACKING AND HELICOIL INSERT CAN OCCUR.

7) After the cover is completely engaged, loosen, and then symmetrically tighten the nuts (9) to 150-170 pound-inches (16.9-19.2 newton-meters) plus the torque to turn the nuts (9) through the self-locking quality.

8) After all nuts (9) are tightened, tighten the torque-limiting bolt (13) to 150-170 pound-inches (16.9-19.2 newton-meters) plus the torque necessary to turn the torque-limitng bolt (5) into the helicoil insert.

(e) ENGINES POST-PW-SB 73-104;

Install the fuel filter cover (8) with the steps that follow:

CAUTION: MAKE SURE YOU SYMMETRICALLY TIGHTEN THE NUTS TO ENGAGE THE FUEL FILTER COVER TO THE HOUSING. MONITOR THE INSTALLATION OF THE FUEL FILTER COVER AND MAKE SURE THE FUEL FILTER COVER ENGAGES THE HOUSING SYMMETRICALLY AND FREELY. IF YOU TIGHTEN THE NUTS TOO MUCH, DAMAGE TO THE PACKING CAN OCCUR.

1) Clean the threads of the dee-bolts (11) with the solvent (P11-004) .

a) Make sure the threads of the dee-bolts (11) are dry before you install them.

BOEING PROPRIETARY - Copyright (C) - Unpublished Work - See title page for details.

2) Install the fuel pump filter (2) onto the tapered pins of the fuel filter cover (8).

3) Verify that the retaining rings (12) are properly placed on the dee-bolts (11).

4) Attach the fuel pump filter (2) and the fuel filter cover (8) to the fuel pump (1) with the dee-bolts (11), washers (10), and nuts (9).

5) Equally tighten the nuts (9) to symmetrically engage the fuel filter cover (8).

a) Monitor the torque necessary to turn the nuts (9) through the self-locking quality.

6) After all nuts (9) are tightened, loosen and tighten the nuts (9) (one at a time) to 150-170 pound-inches (16.9-19.2 newton-meters) plus the torque necessary to turn the nuts (9) through the self-locking quality.

(f) Install the drain plug (6) as follows:

1) Lubricate the packing (7) with oil.

2) Install the packing (7) to the drain plug (6).

3) Lubricate the threads of the drain plug (6) with oil.

4) Install the drain plug (6) into the fuel filter cover (8).

a) Tighten the drain plug (6) to 45-55 pound-inches (5.1-6.2 newton-meters).

5) Safety the drain plug (6) with lockwire or safety cable and safety cable ferrule.

E. Return the Aircraft to its Usual Condition

<u>WARNING</u>: OBEY THE INSTRUCTIONS IN AMM 78-31-00/201 WHEN YOU CLOSE THE THRUST REVERSERS. IF YOU DO NOT OBEY THE INSTRUCTIONS, INJURY TO PERSONS OR DAMAGE TO EQUIPMENT CAN OCCUR.

(1) Close the right thrust reverser (AMM 78-31-00/201).

BOEING PROPRIETARY - Copyright (C) - Unpublished Work - See title page for details.

MECH	INSP

(2) Close the right core cowl panel (AMM 71-11-06/201).

(3) Close the right fan cowl panel (AMM 71-11-04/201).

(4) Do the activation procedure for the thrust reversers (AMM 78-31-00/201).

(5) For the left engine, remove the DO-NOT-CLOSE tag and close this circuit breaker on the P6 panel:

(a) 6E1, FUEL VALVES L SPAR

(6) For the left engine, remove the DO-NOT-CLOSE tag and close this circuit breaker on the P11 panel:

(a) 11D25, FUEL CONT VLV & EEC CHAN B RESET L

(7) Do the test for the Fuel Pump Filter that is shown in the Power Plant Test Reference Table (AMM 71-00-00/501).

BOEING PROPRIETARY - Copyright (C) - Unpublished Work - See title page for details.

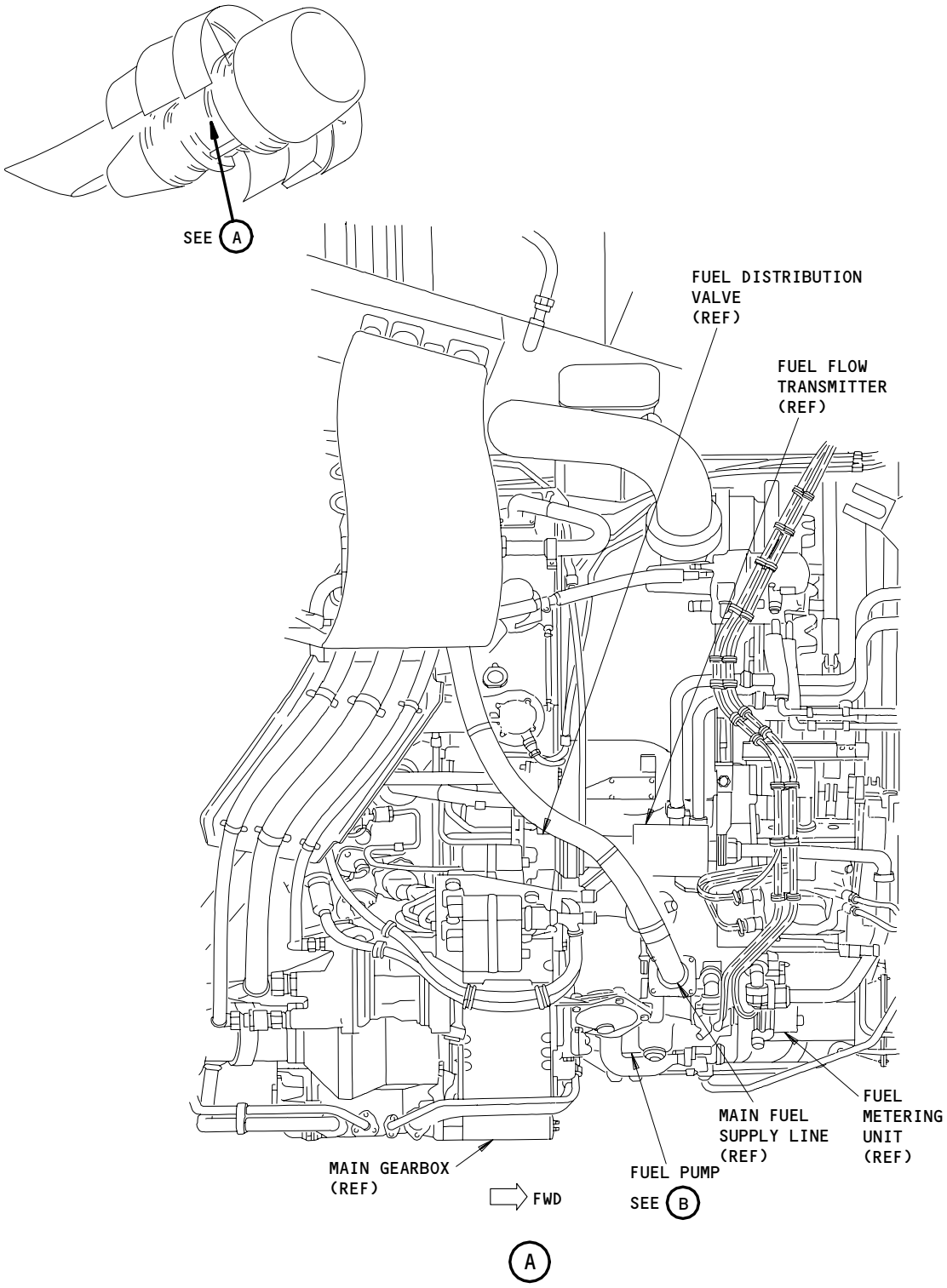

Fuel Pump Filter Installation
Figure 401 (Sheet 1)

BOEING PROPRIETARY - Copyright (C) - Unpublished Work - See title page for details.

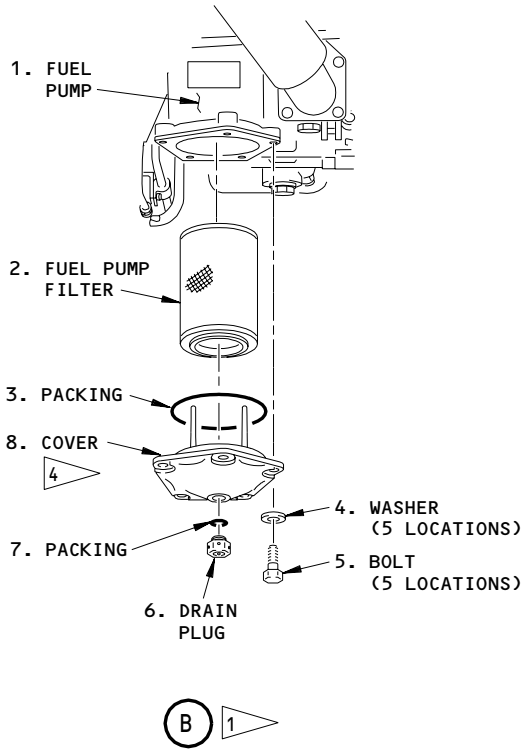

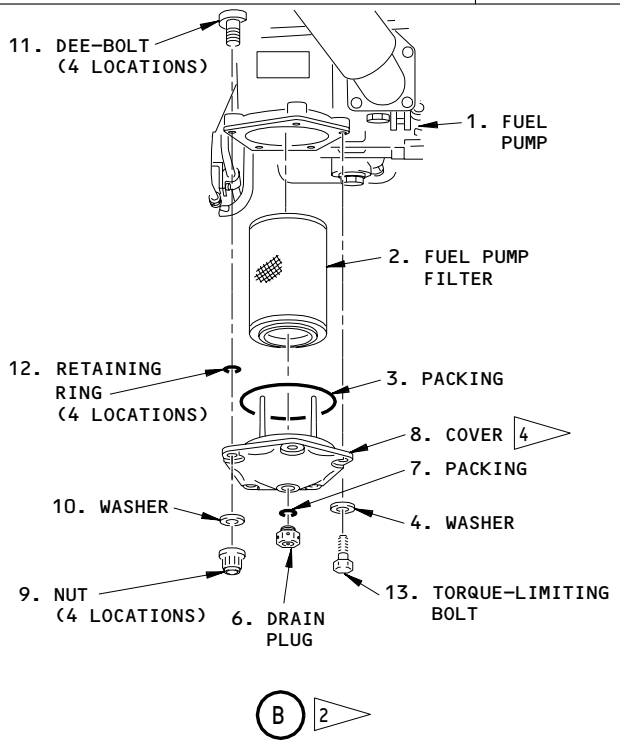

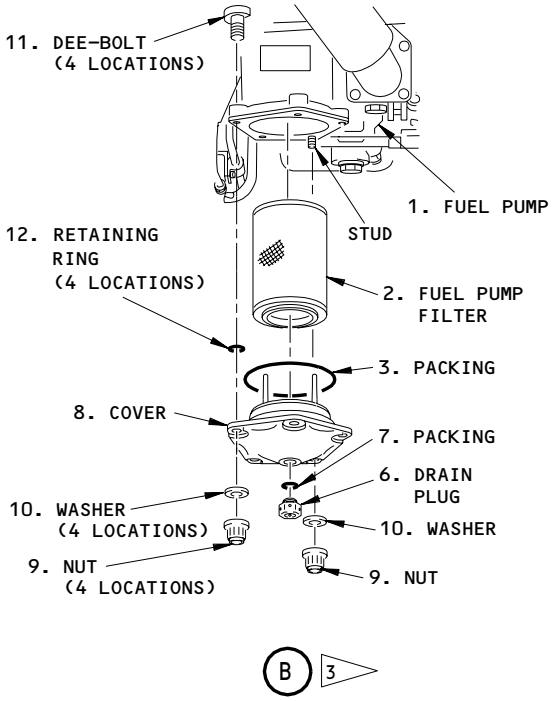

1 FUEL PUMP WITHOUT THE DEE-BOLTS (PRE-PW-SB 73-75).

2 FUEL PUMP WITH THE DEE-BOLTS AND THE TORQUE-LIMITING BOLT (POST-PW-SB 73-75).

3 FUEL PUMP WITH THE DEE-BOLTS AND THE STUD (POST-PW-SB 73-104)

4 COVER WITH THE TAPERED PINS POST-PW-SB 73-85).

Fuel Pump Filter Installation
Figure 401 (Sheet 2)

BOEING PROPRIETARY - Copyright (C) - Unpublished Work - See title page for details.

STATION		BOEING CARD NO.
TAIL NO.	SAS BOEING 767 TASK CARD	73-401-01-2
DATE		AIRLINE CARD NO.

SKILL	WORK AREA	RELATED TASK	INTERVAL	PHASE	MPD REV	TASK CARD REVISION
ENGIN	ENGINE 2		1C	11212	005	APR 22/08

TASK	TITLE	STRUCTURAL ILLUSTRATION REFERENCE	APPLICABILITY AIRPLANE	APPLICABILITY ENGINE
REPLACE	ENGINE 2 FUEL PUMP FILTER ELEMENT		ALL	4000

ZONES	ACCESS PANELS
421	424AR 426AR 428AR

MECH	INSP	MPD ITEM NUMBER
		N73-11-02-4B

VISUALLY CHECK THE ENGINE 2 FUEL PUMP FILTER ELEMENT FOR METALLIC PARTICLES AND REPLACE THE ELEMENT WITH A SERVICEABLE ELEMENT.

1. General

   A. The fuel pump filter is attached to the bottom of the fuel pump. You can get access through the right thrust reverser.

2. Remove the Fuel Pump Filter (Fig. 401)

   A. Equipment

      (1) Container - 5 gallon (20 liters), to catch the fuel

   B. References

      (1) AMM 24-22-00/201, Electrical Power - Control

      (2) AMM 28-10-00/201, Microbial Growth

      (3) AMM 71-11-04/201, Fan Cowl Panels

      (4) AMM 71-11-06/201, Core Cowl Panels

      (5) AMM 73-11-01/401, Fuel Pump

      (6) AMM 73-11-02/601, Fuel Pump Filter

      (7) AMM 78-31-00/201, Thrust Reverser System

   C. Prepare to Remove the Fuel Pump Filter

      (1) Supply electrical power (AMM 24-22-00/201).

BOEING PROPRIETARY - Copyright (C) - Unpublished Work - See title page for details.

MECH | INSP

(2) Make sure that applicable engine and spar valves are closed as follows:

(a) For the right engine, make sure this circuit breaker on the main power distribution panel, P6, is closed:

1) 6E2, FUEL VALVES R SPAR

(b) For the right engine, make sure this circuit breaker on the overhead panel, P11, is closed:

1) 11D26, FUEL CONT VLV & EEC CHAN B RESET R

(c) Make sure that the applicable FUEL CONTROL switch is in the cutoff position.

(3) Make sure that the applicable ENG VALVE and SPAR VALVE panel lights on the control stand are off.

(4) For the right engine, open this circuit breaker on the main power distribution panel, P6, and attach the DO-NOT-CLOSE tag:

(a) 6E2, FUEL VALVES R SPAR

(5) For the right engine, open this circuit breaker on the overhead panel, P11, and attach the DO-NOT-CLOSE tag:

(a) 11D26, FUEL CONT VLV & EEC CHAN B RESET R

(6) Remove electrical power (AMM 24-22-00/201).

(7) Open the right fan cowl panel (AMM 71-11-04/201).

WARNING: DO THE THRUST REVERSER DEACTIVATION PROCEDURE TO PREVENT THE OPERATION OF THE THRUST REVERSER. THE ACCIDENTAL OPERATION OF THE THRUST REVERSER CAN CAUSE INJURY TO PERSONS OR DAMAGE TO EQUIPMENT.

(8) Do this procedure: Thrust Reverser Deactivation for Ground Maintenance (AMM 78-31-00/201).

(9) Open the right core cowl panel (AMM 71-11-06/201).

BOEING PROPRIETARY - Copyright (C) - Unpublished Work - See title page for details.

MECH | INSP

WARNING: OBEY THE INSTRUCTIONS IN AMM 78-31-00/201 WHEN YOU OPEN THE THRUST REVERSERS. IF YOU DO NOT OBEY THE INSTRUCTIONS, INJURY TO PERSONS OR DAMAGE TO EQUIPMENT CAN OCCUR.

(10) Open the right thrust reverser (AMM 78-31-00/201).

D. Procedure

(1) Drain the fuel from the fuel pump filter with the steps that follow:

(a) Put the container below the fuel filter cover (8).

WARNING: DO NOT LET THE FUEL STAY ON YOUR SKIN FOR A LONG PERIOD OF TIME. THE FUEL IS POISONOUS AND CAN BE ABSORBED THROUGH YOUR SKIN.

(b) Remove the drain plug (6) from the center of the fuel pump filter cover (8).

1) Let the fuel fully drain.

2) Discard the packing (7).

(2) Remove the fuel pump filter:

(a) ENGINES PRE-PW-SB 73-75 AND PRE-PW-SB 73-104;

Remove the fuel filter cover (8) with the steps that follow:

1) Remove the bolts (5) and washers (4) from the fuel filter cover (8).

2) Monitor the torque necessary to turn the bolts (5) out of the helicoil inserts in the fuel pump.

BOEING PROPRIETARY - Copyright (C) - Unpublished Work - See title page for details.

a) If the necessary torque is less than 6.5 pound-inches (0.73 Newton-meters), replace the fuel pump (AMM 73-11-01/401).

NOTE: If a replacement fuel pump is not available, you can use different bolts as specified in the Argo-Tech Component Maintenance Manual 73-11-04.

3) Remove the fuel filter cover (8) and the fuel pump filter (2).

(b) ENGINES POST-PW-SB 73-75 AND PRE-PW-SB 73-104;

CAUTION: DO NOT PUT UNWANTED FORCE ON THE HEAD OF THE TORQUE-LIMITING BOLT. KEEP THE WRENCH STRAIGHT AND AT 90 DEGREES TO THE HEAD AND LOOSEN IT SLOWLY. IF YOU DO NOT OBEY THESE INSTRUCTIONS, YOU CAN CAUSE DAMAGE TO THE TORQUE-LIMITING BOLT.

1) Keep the wrench straight and at 90 degrees to the head of the torque-limiting bolt (13) and slowly loosen and remove the torque-limiting bolt (13) and washer (4).

2) Monitor the torque necessary to remove the torque-limiting bolt (13) from the helicoil self-locking quality.

a) If the torque is less than 6.5 pound-inches (0.73 newton-meters), replace the fuel pump (AMM 73-11-01/401).

NOTE: If a replacement fuel pump is not available, you can use different bolts as specified in the Argo-Tech Component Maintenance Manual 73-11-04.

3) Remove the nuts (9) and washers (10) from the dee-bolts (11).

4) Remove the fuel filter cover (8) and the fuel pump filter (2).

(c) ENGINES POST-PW-SB 73-104;

BOEING PROPRIETARY - Copyright (C) - Unpublished Work - See title page for details.

Remove the fuel filter cover (8) with the steps that follow:

1) Remove the nuts (9) and washers (10) from the dee-bolts (11) and the stud.

2) Remove the fuel filter cover (8) and the fuel pump filter (2) from the fuel pump (1).

NOTE: Some fuel filter covers have machined slot in the split surface. These machined slots will help you remove the fuel filter cover.

(d) Remove the packing (3) from the fuel filter cover (8).

1) Discard the packing (3).

(e) Examine the housing for the fuel pump filter and the fuel filter cover (8) to make sure the old gaskets from the fuel pump filter (2) are removed.

(f) Install a cover on the fuel pump to prevent contamination.

(3) Do the Inspection of the Fuel Pump Filter (AMM 73-11-02/601).

(a) Examine the fuel filter element for signs of microbial contamination.

NOTE: Microbial contamination may be evident in the filter as a dark colored sludge or slime but does not always have these characteristics. Microbial contamination can cause a blocked fuel filter and result in a fuel filter bypass condition.

1) If the fuel filter element has trapped fine debris of unknown origin, it is recommended you do the inspection of the fuel tanks for microbial contamination (AMM 28-10-00/201).

(b) Examine the fuel pump filter for bronze color particles (AMM 73-11-02/601).

3. Install the Fuel Pump Filter (Fig. 401)

A. Consumable Materials

BOEING PROPRIETARY - Copyright (C) - Unpublished Work - See title page for details.

(1) D00137, Oil - PWA 521

(2) D00504, Petrolatum - PMC 9609

(3) G01505 Lockwire, Safety and Lock - NASM20995

(4) G02332 Ferrule - P05-292 (Optional)

(5) G02335 Cable - Safety - P05-291 (Optional)

(6) G01025 Solvent - Cleaning - P11-004

B. Parts

AMM		NOMENCLATURE	AIPC		
FIG	ITEM		SUBJECT	FIG	ITEM
401	2 3 7	Filter Packing Packing	73-11-02	10	35, 38 30 10

C. References

(1) AMM 71-00-00/501, Power Plant

(2) AMM 71-11-04/201, Fan Cowl Panels

(3) AMM 71-11-06/201, Core Cowl Panels

(4) AMM 73-11-01/401, Fuel Pump

(5) AMM 78-31-00/201, Thrust Reverser System

D. Procedure

(1) Prepare to install the fuel pump filter:

(a) Remove the covers from the fuel pump.

(b) Clean the fuel filter cover (8) and the inner space of the fuel filter housing.

BOEING PROPRIETARY - Copyright (C) - Unpublished Work - See title page for details.

MECH | INSP

(c) Examine the helicoil insert(s) to make sure they are correctly installed in the recesses of the fuel pump filter housing.

(d) If the helicoil insert(s) are not in the fuel pump filter housing recesses, replace the fuel pump (1) (AMM 73-11-01/401).

CAUTION: MAKE SURE THE OLD GASKETS OF THE FUEL PUMP FILTER DO NOT STAY IN THE HOUSING FOR THE FUEL PUMP FILTER OR THE FUEL FILTER COVER. IF YOU DO NOT REMOVE THE OLD GASKETS, DAMAGE TO THE ENGINE CAN OCCUR.

(e) Examine the housing for the fuel pump filter and the fuel filter cover (8) to make sure the old gaskets from the fuel pump filter (2) are removed.

1) If necessary, remove the old gaskets.

CAUTION: DO NOT CLEAN THE FUEL FILTER OR USE THE SAME FUEL FILTER AGAIN. IF YOU DO NOT USE A NEW, CLEAN AND UNDAMAGED FUEL FILTER, DAMAGE TO THE ENGINE CAN OCCUR.

CAUTION: INSTALL THE CORRECT FUEL PUMP FILTER FOR THE ENGINE MODEL. LOOK AT THE FUEL PUMP FILTER TO FIND THE PART NUMBER AND ENGINE MODEL MARKS. IF THE FUEL PUMP FILTER IS INCORRECT FOR THE ENGINE MODEL, IT CAN CAUSE CONTAMINATION OF THE FUEL SYSTEM AND UNSATISFACTORY ENGINE OPERATION.

(2) Install the fuel pump filter:

(a) Lubricate the packing (3) with petrolatum.

(b) Install the packing (3) into the groove in the fuel filter cover (8).

(c) ENGINES PRE-PW-SB 73-75 AND PRE-PW-SB 73-104;

Install the fuel pump filter (2) with the steps that follow:

1) Clean the bolt (5) threads with solvent (P11-004) and dry the bolt (5) threads before installation.

BOEING PROPRIETARY - Copyright (C) - Unpublished Work - See title page for details.

MECH | INSP

2) ENGINES PRE-PW-SB 73-85;
Install a new fuel pump filter (2) on the fuel filter cover (8).

3) ENGINES POST-PW-SB 73-85;
Install a new fuel pump filter (2) onto the tapered pins of the fuel filter cover (8).

CAUTION: USE THE TIGHTENING PROCEDURE THAT FOLLOWS. THIS WILL PREVENT DAMAGE TO THE PACKING AND HELICOIL INSERTS, AND MAKE SURE THAT THE FUEL FILTER COVER IS CORRECTLY ALIGNED.

4) Install the fuel pump filter (2) and the fuel filter cover (8) to the fuel pump (1) with the bolts (5) and washers (4).

5) Monitor the torque necessary to turn the bolts (5) into the helicoil inserts.

a) Make a note of the torque value (Ta= _____).

6) Symmetrically tighten the bolts (5) to the value Tb where Tb = (150-170 pound-inches (16.9-19.2 newton-meters) + Ta).

7) Safety the bolts (5) with lockwire or safety cable and safety cable ferrule.

(d) ENGINES POST-PW-SB 73-75 AND PRE-PW-SB 73-104;

Install the fuel pump filter (8) with the steps that follow:

1) Clean the threads of the torque-limiting bolt (13) and the dee-bolts (11) with the solvent (P11-004).

a) Make sure the threads are dry before you install the bolts.

2) ENGINES PRE-PW-SB 73-85;
Install the fuel pump filter (2) on the fuel filter cover (8).

3) ENGINES POST-PW-SB 73-85;
Install the fuel pump filter (2) onto the tapered pins of the fuel filter cover (8).

BOEING PROPRIETARY - Copyright (C) - Unpublished Work - See title page for details.

4) Verify that the retaining rings (12) are properly placed on the Dee-bolts.

5) Attach the fuel pump filter (2) and the fuel filter cover (8) to the fuel pump (1) with the dee-bolts (11), washers (10), and nuts (9).

6) Install the torque-limiting bolt (13) and washer (4).

CAUTION: DO NOT TIGHTEN THE TORQUE-LIMITING BOLT BEFORE THE FUEL FILTER COVER IS FULLY ENGAGED INTO THE FUEL FILTER HOUSING. IF YOU TIGHTEN THE TORQUE-LIMITING BOLT BEFORE THE FUEL FILTER COVER IS FULLY ENGAGED, DAMAGE TO THE PACKING AND HELICOIL INSERT CAN OCCUR.

7) After the cover is completely engaged, loosen, and then symmetrically tighten the nuts (9) to 150-170 pound-inches (16.9-19.2 newton-meters) plus the torque to turn the nuts (9) through the self-locking quality.

8) After all nuts (9) are tightened, tighten the torque-limiting bolt (13) to 150-170 pound-inches (16.9-19.2 newton-meters) plus the torque necessary to turn the torque-limitng bolt (5) into the helicoil insert.

(e) ENGINES POST-PW-SB 73-104;

Install the fuel filter cover (8) with the steps that follow:

CAUTION: MAKE SURE YOU SYMMETRICALLY TIGHTEN THE NUTS TO ENGAGE THE FUEL FILTER COVER TO THE HOUSING. MONITOR THE INSTALLATION OF THE FUEL FILTER COVER AND MAKE SURE THE FUEL FILTER COVER ENGAGES THE HOUSING SYMMETRICALLY AND FREELY. IF YOU TIGHTEN THE NUTS TOO MUCH, DAMAGE TO THE PACKING CAN OCCUR.

1) Clean the threads of the dee-bolts (11) with the solvent (P11-004) .

a) Make sure the threads of the dee-bolts (11) are dry before you install them.

BOEING PROPRIETARY - Copyright (C) - Unpublished Work - See title page for details.

2) Install the fuel pump filter (2) onto the tapered pins of the fuel filter cover (8).

3) Verify that the retaining rings (12) are properly placed on the dee-bolts (11).

4) Attach the fuel pump filter (2) and the fuel filter cover (8) to the fuel pump (1) with the dee-bolts (11), washers (10), and nuts (9).

5) Equally tighten the nuts (9) to symmetrically engage the fuel filter cover (8).

a) Monitor the torque necessary to turn the nuts (9) through the self-locking quality.

6) After all nuts (9) are tightened, loosen and tighten the nuts (9) (one at a time) to 150-170 pound-inches (16.9-19.2 newton-meters) plus the torque necessary to turn the nuts (9) through the self-locking quality.

(f) Install the drain plug (6) as follows:

1) Lubricate the packing (7) with oil.

2) Install the packing (7) to the drain plug (6).

3) Lubricate the threads of the drain plug (6) with oil.

4) Install the drain plug (6) into the fuel filter cover (8).

a) Tighten the drain plug (6) to 45-55 pound-inches (5.1-6.2 newton-meters).

5) Safety the drain plug (6) with lockwire or safety cable and safety cable ferrule.

E. Return the Aircraft to its Usual Condition

<u>WARNING</u>: OBEY THE INSTRUCTIONS IN AMM 78-31-00/201 WHEN YOU CLOSE THE THRUST REVERSERS. IF YOU DO NOT OBEY THE INSTRUCTIONS, INJURY TO PERSONS OR DAMAGE TO EQUIPMENT CAN OCCUR.

(1) Close the right thrust reverser (AMM 78-31-00/201).

BOEING PROPRIETARY - Copyright (C) - Unpublished Work - See title page for details.

MECH	INSP

(2) Close the right core cowl panel (AMM 71-11-06/201).

(3) Close the right fan cowl panel (AMM 71-11-04/201).

(4) Do the activation procedure for the thrust reversers (AMM 78-31-00/201).

(5) For the right engine, remove the DO-NOT-CLOSE tag and close this circuit breaker on the P6 panel:

(a) 6E2, FUEL VALVES R SPAR

(6) For the right engine, remove the DO-NOT-CLOSE tag and close this circuit breaker on the P11 panel:

(a) 11D26, FUEL CONT VLV & EEC CHAN B RESET R

(7) Do the test for the Fuel Pump Filter that is shown in the Power Plant Test Reference Table (AMM 71-00-00/501).

BOEING PROPRIETARY - Copyright (C) - Unpublished Work - See title page for details.

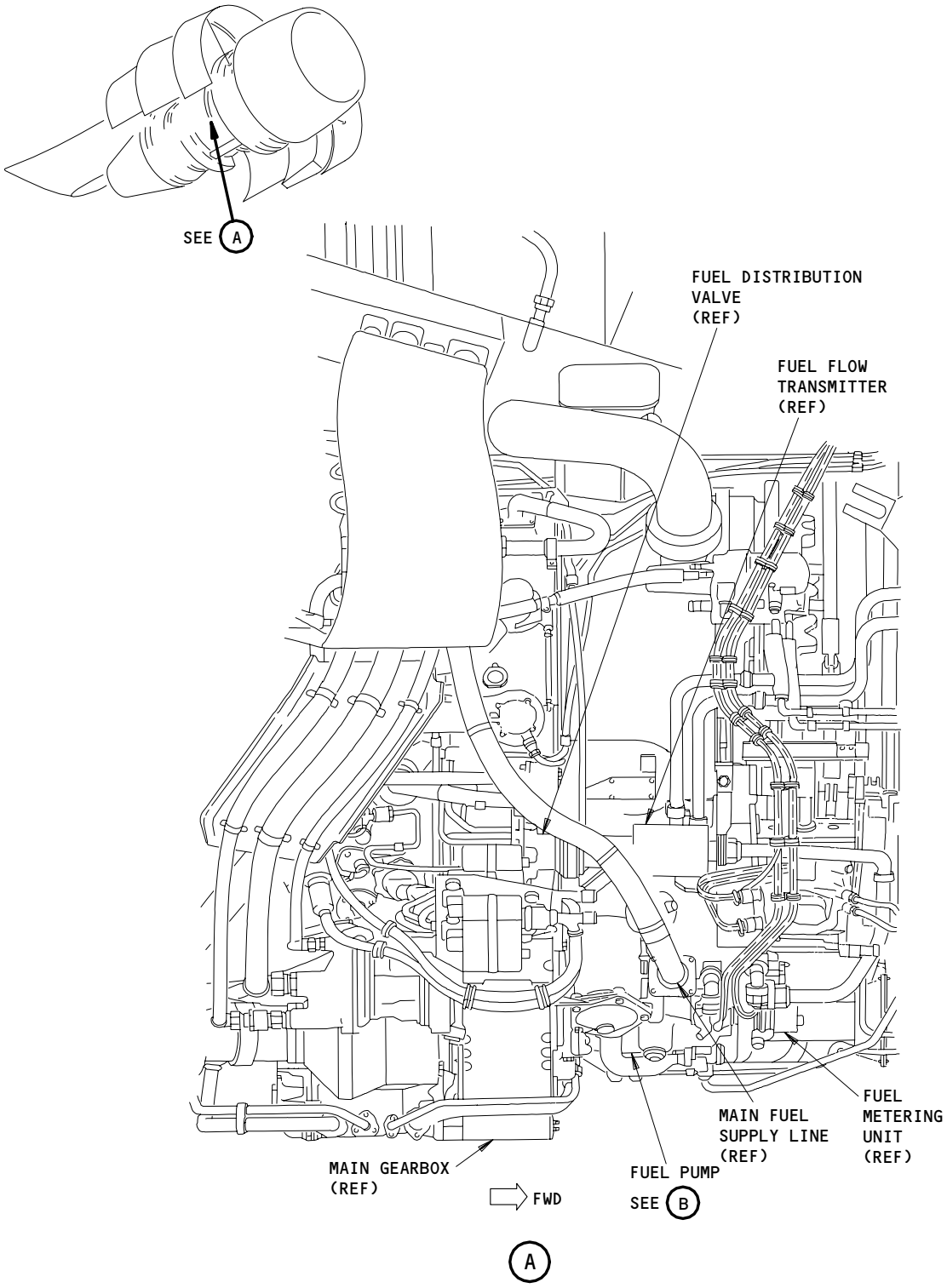

Fuel Pump Filter Installation
Figure 401 (Sheet 1)

BOEING PROPRIETARY - Copyright (C) - Unpublished Work - See title page for details.

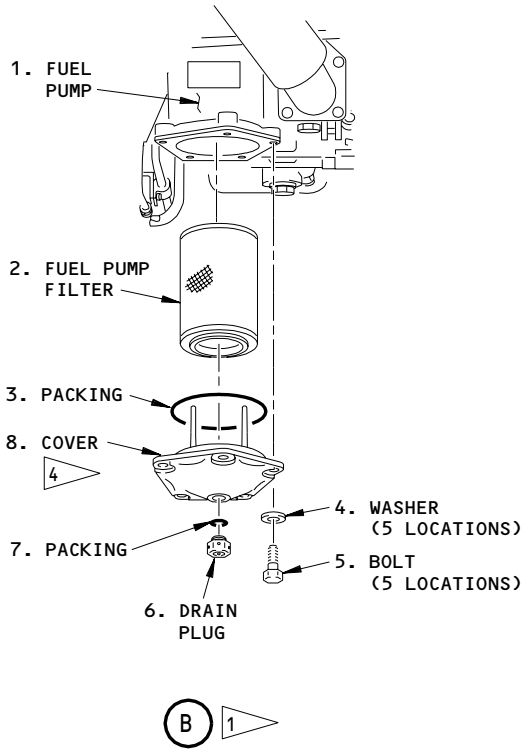

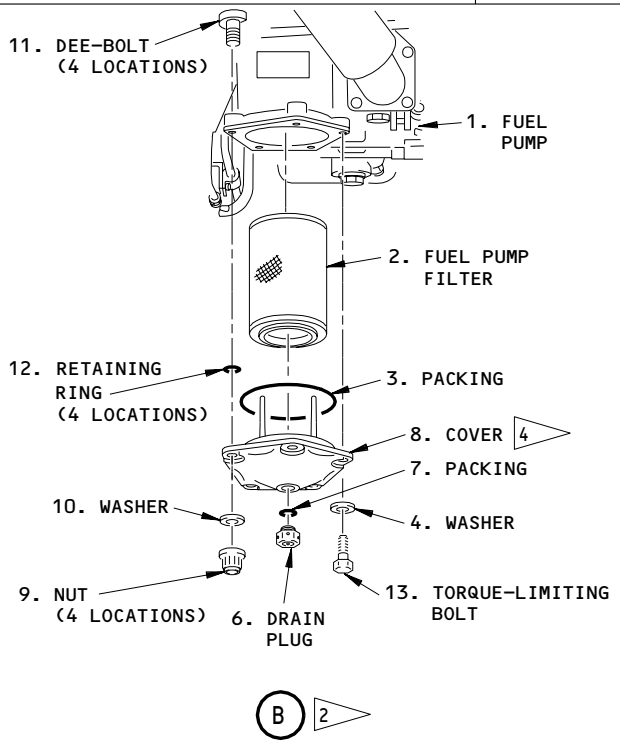

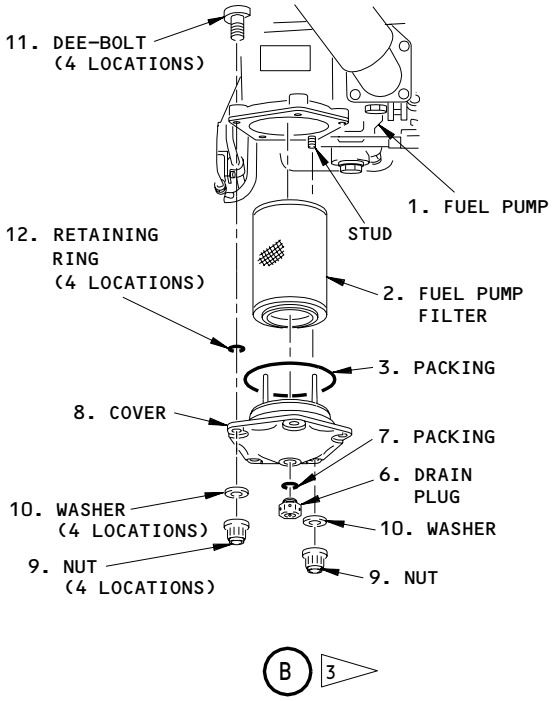

1 FUEL PUMP WITHOUT THE DEE-BOLTS (PRE-PW-SB 73-75).

2 FUEL PUMP WITH THE DEE-BOLTS AND THE TORQUE-LIMITING BOLT (POST-PW-SB 73-75).

3 FUEL PUMP WITH THE DEE-BOLTS AND THE STUD (POST-PW-SB 73-104)

4 COVER WITH THE TAPERED PINS POST-PW-SB 73-85).

Fuel Pump Filter Installation
Figure 401 (Sheet 2)

BOEING PROPRIETARY - Copyright (C) - Unpublished Work - See title page for details.

STATION		BOEING CARD NO.
TAIL NO.	SAS BOEING 767 TASK CARD	73-403-01-1
DATE		AIRLINE CARD NO.

SKILL	WORK AREA	RELATED TASK	INTERVAL	PHASE	MPD REV	TASK CARD REVISION
ENGIN	ENGINE 1		01000 HRS	10202	005	DEC 22/07

TASK	TITLE	STRUCTURAL ILLUSTRATION REFERENCE	APPLICABILITY AIRPLANE	APPLICABILITY ENGINE
CHECK/INSP	FUEL LINES, MANIFOLDS AND COMPONENTS		ALL	4000

ZONES	ACCESS PANELS
411	415AL 416AR 417AL 418AR

MECH	INSP		MPD ITEM NUMBER
		VISUALLY CHECK THE ENGINE 1 FUEL LINES, MANIFOLDS AND COMPONENTS FOR CONDITION, SECURITY AND LEAKAGE.	N73-00-00-B

EFFECTIVITY

CHECK/INSP	FUEL LINES, MANIFOLDS AND COMPONENTS
N73-00-00-B	73-403-01-1 PAGE 1 OF 1 DEC 22/07

5083

BOEING PROPRIETARY - Copyright (C) - Unpublished Work - See title page for details.

STATION		BOEING CARD NO.
TAIL NO.	SAS BOEING 767 TASK CARD	73-403-01-2
DATE		AIRLINE CARD NO.

SKILL	WORK AREA	RELATED TASK	INTERVAL	PHASE	MPD REV	TASK CARD REVISION
ENGIN	ENGINE 2		01000 HRS	10202	005	DEC 22/07

TASK	TITLE	STRUCTURAL ILLUSTRATION REFERENCE	APPLICABILITY AIRPLANE	APPLICABILITY ENGINE
CHECK/INSP	FUEL LINES, MANIFOLDS AND COMPONENTS		ALL	4000

ZONES	ACCESS PANELS
421	425AL 426AR 427AL 428AR

MECH	INSP		MPD ITEM NUMBER
		VISUALLY CHECK THE ENGINE 2 FUEL LINES, MANIFOLDS AND COMPONENTS FOR CONDITION, SECURITY AND LEAKAGE.	N73-00-00-B

EFFECTIVITY

BOEING PROPRIETARY - Copyright (C) - Unpublished Work - See title page for details.

SKILL	WORK AREA	RELATED TASK	INTERVAL	PHASE	MPD REV	TASK CARD REVISION
SHOPS	ENGINE 1		2C	12424	005	DEC 22/00

TASK	TITLE	STRUCTURAL ILLUSTRATION REFERENCE	APPLICABILITY AIRPLANE	APPLICABILITY ENGINE
FUNCTIONAL	FUEL PUMP FILTER DIFF PRESS SWITCH		ALL	4000

ZONES	ACCESS PANELS
411	414AR 416AR 418AR

MECH | INSP | MPD ITEM NUMBER

CHECK (OFF AIRCRAFT) THE ENGINE 1 FUEL PUMP FILTER DIFFERENTIAL PRESSURE SWITCH SETTING. N73-34-01-4A

THE FOLLOWING PROCEDURE APPLIES TO THE ON-AIRCRAFT PORTION OF THIS TASK (REMOVAL/INSTALLATION):

1. Remove the Fuel Pump Filter Differential Pressure Switch (Fig. 401)

   A. Equipment

      (1) Five gallon (20 liter) container for the fuel.

      (2) M303, M305, or M307 Bergen Mechanical Crimper (Optional)
      Bergen Cable Technologies Inc
      170 Gregg St
      P.O. Box 1300
      Lodi, NJ 07644-9982

   B. Consumable Materials

      (1) D00137 Oil, PWA-521

      (2) G02334 Lockwire - AS3214-02

      (3) G02332 Ferrule - P05-292 (Optional)

      (4) G02335 Cable - Safety - P05-291 (Optional)

      (5) D00504, Petrolatum - PMC 9609

   C. References

      (1) AMM 71-00-00/501, Power Plant

      (2) AMM 71-11-04/201, Fan Cowl Panels

BOEING PROPRIETARY - Copyright (C) - Unpublished Work - See title page for details.

MECH	INSP

(3) AMM 71-11-06/201, Core Cowl Panels

(4) AMM 78-31-00/201, Thrust Reverser System

D. Prepare for Removal

(1) Supply electrical power (AMM 24-22-00/201).

(2) Make sure that applicable engine and spar valves are closed as follows:

(a) Make sure this circuit breaker on the main power distribution panel P6 is closed:

1) For the left engine:

a) 6E1, FUEL VALVES L SPAR

(b) Make sure this circuit breaker on the overhead panel P11 is closed:

1) For the left engine:

a) 11D25, FUEL CONT VLV & EEC CHAN B RESET L

(c) Make sure that the applicable FUEL CONTROL switch is in the CUTOFF position.

(d) Make sure that the applicable ENG VALVE and SPAR VALVE panel lights on the control stand are off.

(3) Open this circuit breaker on the main power distribution panel P6 and attach a DO-NOT-CLOSE tag:

(a) For the left engine:

1) 6E1, FUEL VALVES L SPAR

(4) Open this circuit breaker on the overhead panel P11 and attach a DO-NOT-CLOSE tag:

(a) For the left engine:

1) 11D25, FUEL CONT VLV & EEC CHAN B RESET L

(5) Remove electrical power (AMM 24-22-00/201).

BOEING PROPRIETARY - Copyright (C) - Unpublished Work - See title page for details.

MECH	INSP

(6) Open the right fan cowl panel (AMM 71-11-04/201).

WARNING: DO THE THRUST REVERSER DEACTIVATION PROCEDURE TO PREVENT THE OPERATION OF THE THRUST REVERSER. ACCIDENTAL OPERATION OF THE THRUST REVERSER CAN CAUSE INJURY TO PERSONS OR DAMAGE TO EQUIPMENT.

(7) Do this procedure: Thurust Reverser Deactivation for Ground Maintenance (AMM 78-31-00/201).

(8) Open the right core cowl panel (AMM 71-11-06/201).

WARNING: OBEY THE INSTRUCTIONS IN AMM 78-31-00/201 WHEN YOU OPEN THE THRUST REVERSERS. IF YOU DO NOT OBEY THE INSTRUCTIONS, INJURY TO PERSONS OR DAMAGE TO EQUIPMENT CAN OCCUR.

(9) Open the right thrust reverser (AMM 78-31-00/201).

E. Remove the Fuel Pump Filter Differential Presure Switch

WARNING: DO NOT LET ENGINE FUEL STAY ON YOUR SKIN FOR A LONG TIME. THE FUEL IS POISONOUS AND CAN GO THROUGH YOUR SKIN.

(1) Drain the fuel from the fuel filter housing.

(a) Put the container below the drain plug for the fuel filter.

(b) Remove the lockwire or safety cable from the drain plug.

(c) Remove the drain plug from the center of the fuel pump filter cover.

1) Let the fuel drain into the container.

2) Discard the packing on the drain plug.

(d) Lubricate the new packing with the petrolatum.

(e) Install the new packing on the drain plug.

(f) Lubricate the threads of the drain plug with engine oil.

BOEING PROPRIETARY - Copyright (C) - Unpublished Work - See title page for details.

(g) Install the drain plug in the center opening on the fuel filter cover.

1) Tighten the drain plug to 45-55 pound-inches (5.1-6.2 newton-meters).

2) Install the lockwire or the safety cable and safety cable ferrule to the drain plug.

(2) Remove the electrical connector from the differential pressure switch.

(a) Install the protection cap on the electrical connector.

(3) ENGINES WITHOUT THE THERMOCOUPLE PROBE FOR THE EEC FUEL TEMEPRATURE;

Remove the four bolts and washers which attach the differential pressure switch to the fuel pump.

(4) ENGINES WITH THE THERMOCOUPLE PROBE FOR THE EEC FUEL TEMPERATURE;

Remove the four bolts and two washers which attach the differential pressure switch and bracket to the fuel pump.

(5) Remove the differential pressure switch from the fuel pump.

(a) Discard the packings.

(6) Install a protection cap on the fuel pump.

2. <u>Install the Fuel Pump Filter Differential Pressure Switch</u> (Fig. 401)

A. Consumable Materials

(1) D00137 Engine Oil - PWA 521

(2) D00504, Petrolatum - PMC 9609

B. References

(1) AMM 71-00-00/501, Power Plant

(2) AMM 71-11-04/201, Fan Cowl Panels

(3) AMM 71-11-06/201, Core Cowl Panels

(4) AMM 78-31-00/201, Thrust Reverser System

BOEING PROPRIETARY - Copyright (C) - Unpublished Work - See title page for details.

MECH	INSP

C. Install the Fuel Pump Filter Differential Pressure Switch

(1) Remove the cover from the fuel pump.

(2) Lubricate the packings for the fuel pump ports with the petrolatum.

(3) Install the packings in the recesses of the fuel pump ports.

(4) ENGINES WITHOUT THE THERMOCOUPLE PROBE FOR THE EEC FUEL TEMPERATURE;

Install the differential pressure switch with the steps that follow:

(a) Lubricate the threads of the bolts, which attach the differential pressure switch, with engine oil.

(b) Install the differentail pressure switch on the fuel pump with the bolts and washers.

(c) Tighten the bolts to 85-95 pound-inches (9.6-10.7 newton-meters).

(5) ENGINES WITH THE THERMOCOUPLE PROBE FOR THE EEC FUEL TEMPERATURE;

Install the differential pressure switch with the steps that follow:

(a) Lubricate the threads of the bolts, which attach the differential pressure switch, with engine oil.

(b) Install the differential pressure switch with the bracket on the fuel pump with the bolts and two washers.

NOTE: Install the washers below the bolt heads that do not attach the bracket to the fuel pump.

(c) Tighten the bolts to 85-95 pound-inches (9.6-10.7 newton-meters).

(6) Remove the protection cap from the electrical connector.

(7) Install the electrical connector on the differential pressure switch.

(a) Tighten the electrical conector with your hand.

D. Put the Airplane Back to its Usual Condition

BOEING PROPRIETARY - Copyright (C) - Unpublished Work - See title page for details.

MECH	INSP

WARNING: OBEY THE INSTRUCTIONS IN AMM 78-31-00/201 TO CLOSE THE THRUST REVERSERS. IF YOU DO NOT OBEY THE INSTRUCTIONS, INJURY TO PERSONS OR DAMAGE TO EQUIPMENT CAN OCCUR.

(1) Close the right thrust reverser (AMM 78-31-00/201).

(2) Close the right core cowl panel (AMM 71-11-06/201).

(3) Do the activation procedure for the thrust reversers (AMM 78-31-00/201).

(4) Close the right fan cowl panel (AMM 71-11-04/201).

(5) Remove the DO-NOT-CLOSE tag and close this circuit breaker on the main power distribution panel P6:

(a) For the left engine:

1) 6E1, FUEL VALVES L SPAR

(6) Remove the DO-NOT-CLOSE tag and close this circuit breaker on the overhead panel P11:

(a) For the left engine:

1) 11D25, FUEL CONT VLV & EEC CHAN B RESET L

(7) Do the test of the Fuel Pump Filter Differential Pressure Switch that is shown in the Power Plant Test Reference Table (AMM 71-00-00/501).

BOEING PROPRIETARY - Copyright (C) - Unpublished Work - See title page for details.

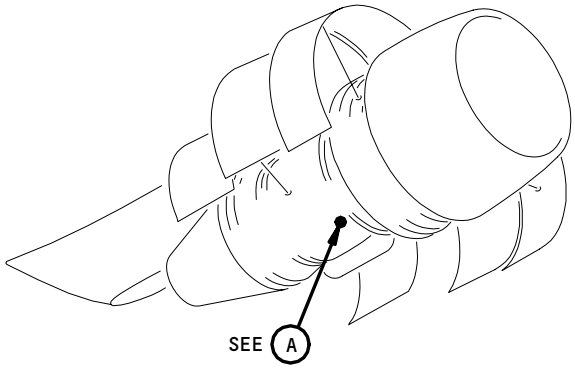

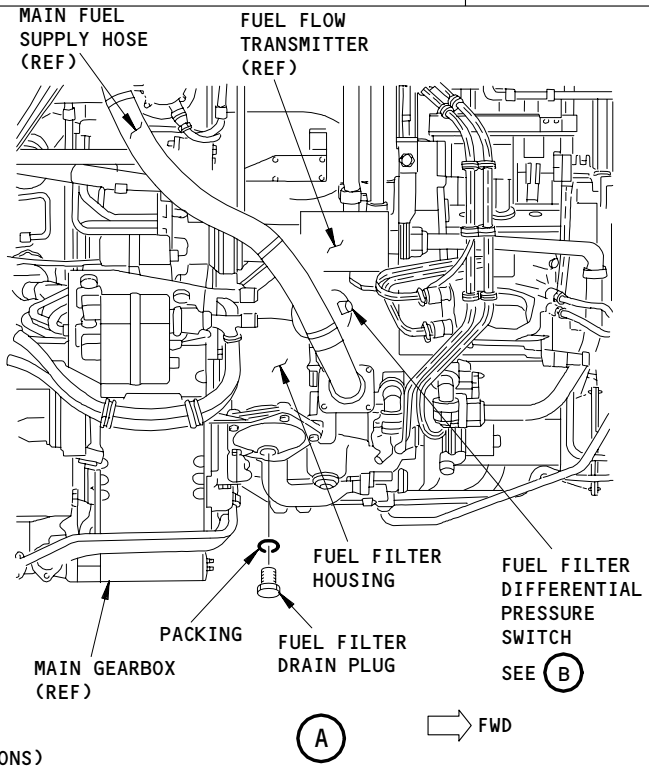

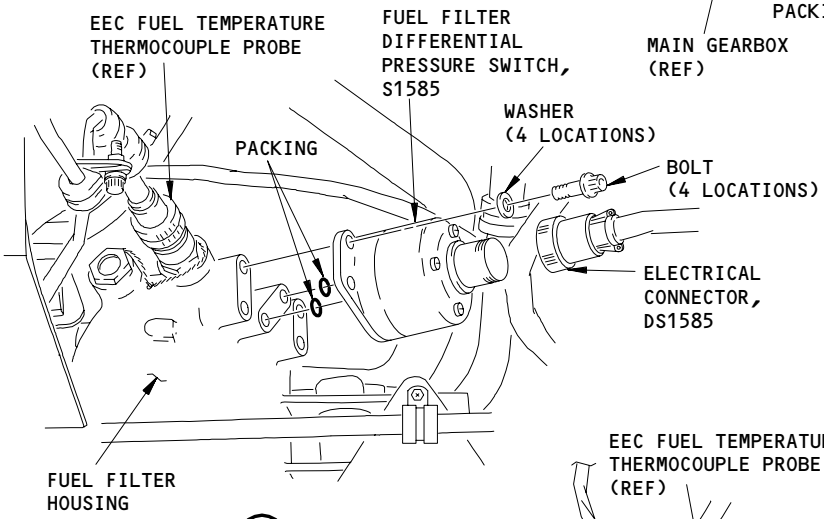

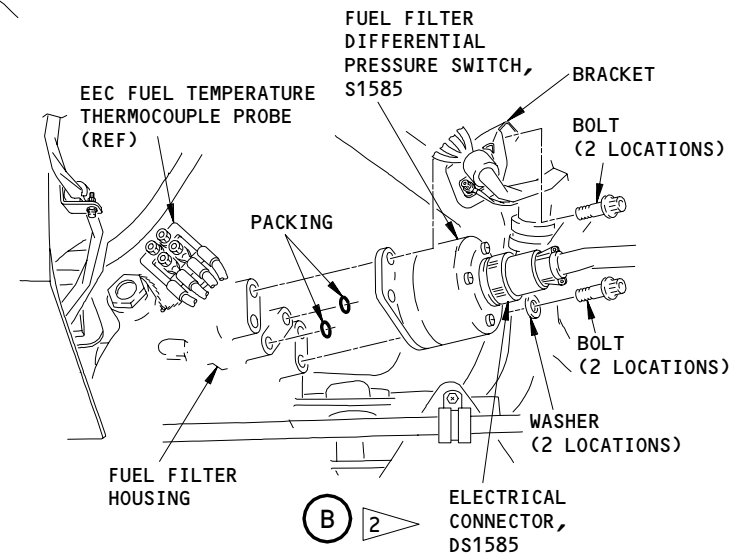

1 ENGINES WITH EEC FUEL TEMPERATURE THERMOCOUPLE PROBE THAT HAS PIN AND SOCKET CONNECTOR

2 ENGINES WITH EEC FUEL TEMPERATURE THERMOCOUPLE PROBE THAT HAS STUD AND LUG CONNECTOR

Fuel Filter Differential Pressure Switch Installation
Figure 401

BOEING PROPRIETARY - Copyright (C) - Unpublished Work - See title page for details.

SKILL	WORK AREA	RELATED TASK	INTERVAL	PHASE	MPD REV	TASK CARD REVISION
SHOPS	ENGINE 2		2C	12424	005	DEC 22/00

TASK	TITLE	STRUCTURAL ILLUSTRATION REFERENCE	APPLICABILITY AIRPLANE	APPLICABILITY ENGINE
FUNCTIONAL	FUEL PUMP FILTER DIFF PRESS SWITCH		ALL	4000

ZONES	ACCESS PANELS
421	424AR 426AR 428AR

MECH | INSP | MPD ITEM NUMBER

CHECK (OFF AIRCRAFT) THE ENGINE 2 FUEL PUMP FILTER DIFFERENTIAL PRESSURE SWITCH SETTING. N73-34-01-4B

THE FOLLOWING PROCEDURE APPLIES TO THE ON-AIRCRAFT PORTION OF THIS TASK (REMOVAL/INSTALLATION).

1. Remove the Fuel Pump Filter Differential Pressure Switch (Fig. 401)

   A. Equipment

      (1) Five gallon (20 liter) container for the fuel.

      (2) M303, M305, or M307 Bergen Mechanical Crimper (Optional)
      Bergen Cable Technologies Inc
      170 Gregg St
      P.O. Box 1300
      Lodi, NJ 07644-9982

   B. Consumable Materials

      (1) D00137 Oil, PWA-521

      (2) G02334 Lockwire - AS3214-02

      (3) G02332 Ferrule - P05-292 (Optional)

      (4) G02335 Cable - Safety - P05-291 (Optional)

      (5) D00504, Petrolatum - PMC 9609

   C. References

      (1) AMM 71-00-00/501, Power Plant

      (2) AMM 71-11-04/201, Fan Cowl Panels

BOEING PROPRIETARY - Copyright (C) - Unpublished Work - See title page for details.

MECH | INSP

(3) AMM 71-11-06/201, Core Cowl Panels

(4) AMM 78-31-00/201, Thrust Reverser System

D. Prepare for Removal

(1) Supply electrical power (AMM 24-22-00/201).

(2) Make sure that applicable engine and spar valves are closed as follows:

(a) Make sure this circuit breaker on the main power distribution panel P6 is closed:

1) For the right engine:

a) 6E2, FUEL VALVES R SPAR

(b) Make sure this circuit breaker on the overhead panel P11 is closed:

1) For the right engine:

a) 11D26, FUEL CONT VLV & EEC CHAN B RESET R

(c) Make sure that the applicable FUEL CONTROL switch is in the CUTOFF position.

(d) Make sure that the applicable ENG VALVE and SPAR VALVE panel lights on the control stand are off.

(3) Open this circuit breaker on the main power distribution panel P6 and attach a DO-NOT-CLOSE tag:

(a) For the right engine:

1) 6E2, FUEL VALVES R SPAR

(4) Open this circuit breaker on the overhead panel P11 and attach a DO-NOT-CLOSE tag:

(a) For the right engine:

1) 11D26, FUEL CONT VLV & EEC CHAN B RESET R

(5) Remove electrical power (AMM 24-22-00/201).

BOEING PROPRIETARY - Copyright (C) - Unpublished Work - See title page for details.

MECH	INSP

(6) Open the right fan cowl panel (AMM 71-11-04/201).

WARNING: DO THE THRUST REVERSER DEACTIVATION PROCEDURE TO PREVENT THE OPERATION OF THE THRUST REVERSER. ACCIDENTAL OPERATION OF THE THRUST REVERSER CAN CAUSE INJURY TO PERSONS OR DAMAGE TO EQUIPMENT.

(7) Do this procedure: Thurust Reverser Deactivation for Ground Maintenance (AMM 78-31-00/201).

(8) Open the right core cowl panel (AMM 71-11-06/201).

WARNING: OBEY THE INSTRUCTIONS IN AMM 78-31-00/201 WHEN YOU OPEN THE THRUST REVERSERS. IF YOU DO NOT OBEY THE INSTRUCTIONS, INJURY TO PERSONS OR DAMAGE TO EQUIPMENT CAN OCCUR.

(9) Open the right thrust reverser (AMM 78-31-00/201).

E. Remove the Fuel Pump Filter Differential Presure Switch

WARNING: DO NOT LET ENGINE FUEL STAY ON YOUR SKIN FOR A LONG TIME. THE FUEL IS POISONOUS AND CAN GO THROUGH YOUR SKIN.

(1) Drain the fuel from the fuel filter housing.

(a) Put the container below the drain plug for the fuel filter.

(b) Remove the lockwire or safety cable from the drain plug.

(c) Remove the drain plug from the center of the fuel pump filter cover.

1) Let the fuel drain into the container.

2) Discard the packing on the drain plug.

(d) Lubricate the new packing with the petrolatum.

(e) Install the new packing on the drain plug.

(f) Lubricate the threads of the drain plug with engine oil.

BOEING PROPRIETARY - Copyright (C) - Unpublished Work - See title page for details.

(g) Install the drain plug in the center opening on the fuel filter cover.

1) Tighten the drain plug to 45-55 pound-inches (5.1-6.2 newton-meters).

2) Install the lockwire or the safety cable and safety cable ferrule to the drain plug.

(2) Remove the electrical connector from the differential pressure switch.

(a) Install the protection cap on the electrical connector.

(3) ENGINES WITHOUT THE THERMOCOUPLE PROBE FOR THE EEC FUEL TEMEPRATURE;

Remove the four bolts and washers which attach the differential pressure switch to the fuel pump.

(4) ENGINES WITH THE THERMOCOUPLE PROBE FOR THE EEC FUEL TEMPERATURE;

Remove the four bolts and two washers which attach the differential pressure switch and bracket to the fuel pump.

(5) Remove the differential pressure switch from the fuel pump.

(a) Discard the packings.

(6) Install a protection cap on the fuel pump.

2. <u>Install the Fuel Pump Filter Differential Pressure Switch</u> (Fig. 401)

A. Consumable Materials

(1) D00137 Engine Oil - PWA 521

(2) D00504, Petrolatum - PMC 9609

B. References

(1) AMM 71-00-00/501, Power Plant

(2) AMM 71-11-04/201, Fan Cowl Panels

(3) AMM 71-11-06/201, Core Cowl Panels

(4) AMM 78-31-00/201, Thrust Reverser System

BOEING PROPRIETARY - Copyright (C) - Unpublished Work - See title page for details.

MECH	INSP

C. Install the Fuel Pump Filter Differential Pressure Switch

(1) Remove the cover from the fuel pump.

(2) Lubricate the packings for the fuel pump ports with the petrolatum.

(3) Install the packings in the recesses of the fuel pump ports.

(4) ENGINES WITHOUT THE THERMOCOUPLE PROBE FOR THE EEC FUEL TEMPERATURE;

Install the differential pressure switch with the steps that follow:

(a) Lubricate the threads of the bolts, which attach the differential pressure switch, with engine oil.

(b) Install the differentail pressure switch on the fuel pump with the bolts and washers.

(c) Tighten the bolts to 85-95 pound-inches (9.6-10.7 newton-meters).

(5) ENGINES WITH THE THERMOCOUPLE PROBE FOR THE EEC FUEL TEMPERATURE;

Install the differential pressure switch with the steps that follow:

(a) Lubricate the threads of the bolts, which attach the differential pressure switch, with engine oil.

(b) Install the differential pressure switch with the bracket on the fuel pump with the bolts and two washers.

NOTE: Install the washers below the bolt heads that do not attach the bracket to the fuel pump.

(c) Tighten the bolts to 85-95 pound-inches (9.6-10.7 newton-meters).

(6) Remove the protection cap from the electrical connector.

(7) Install the electrical connector on the differential pressure switch.

(a) Tighten the electrical conector with your hand.

D. Put the Airplane Back to its Usual Condition

BOEING PROPRIETARY - Copyright (C) - Unpublished Work - See title page for details.

MECH	INSP

WARNING: OBEY THE INSTRUCTIONS IN AMM 78-31-00/201 TO CLOSE THE THRUST REVERSERS. IF YOU DO NOT OBEY THE INSTRUCTIONS, INJURY TO PERSONS OR DAMAGE TO EQUIPMENT CAN OCCUR.

(1) Close the right thrust reverser (AMM 78-31-00/201).

(2) Close the right core cowl panel (AMM 71-11-06/201).

(3) Do the activation procedure for the thrust reversers (AMM 78-31-00/201).

(4) Close the right fan cowl panel (AMM 71-11-04/201).

(5) Remove the DO-NOT-CLOSE tag and close this circuit breaker on the main power distribution panel P6:

(a) For the right engine:

1) 6E2, FUEL VALVES R SPAR

(6) Remove the DO-NOT-CLOSE tag and close this circuit breaker on the overhead panel P11:

(a) For the right engine:

1) 11D26, FUEL CONT VLV & EEC CHAN B RESET R

(7) Do the test of the Fuel Pump Filter Differential Pressure Switch that is shown in the Power Plant Test Reference Table (AMM 71-00-00/501).

BOEING PROPRIETARY - Copyright (C) - Unpublished Work - See title page for details.

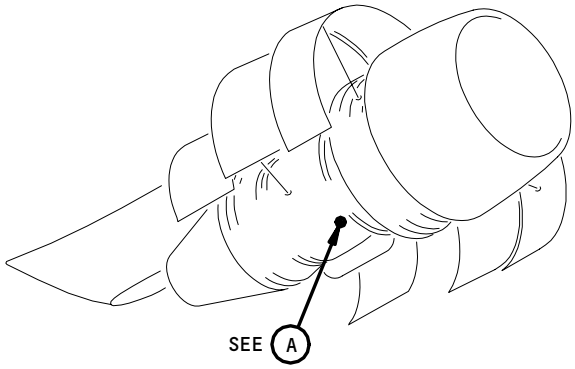

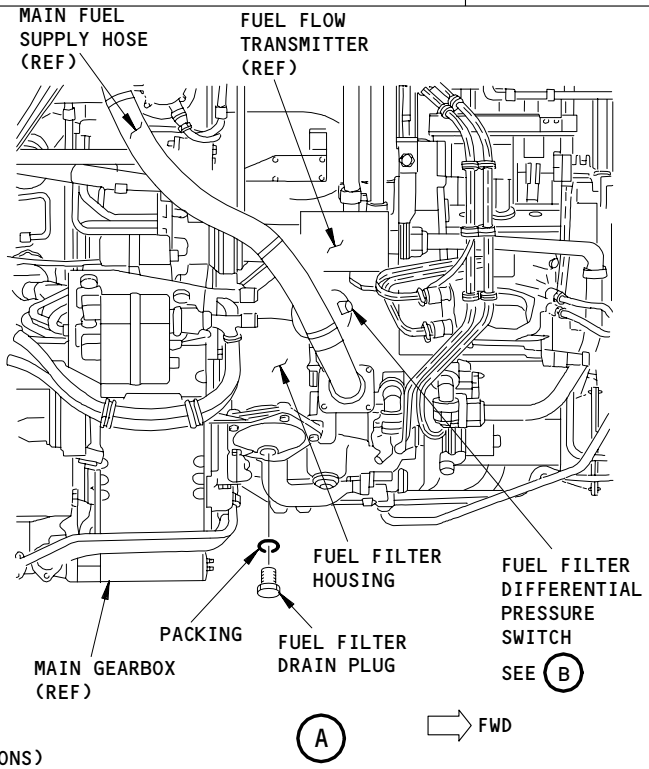

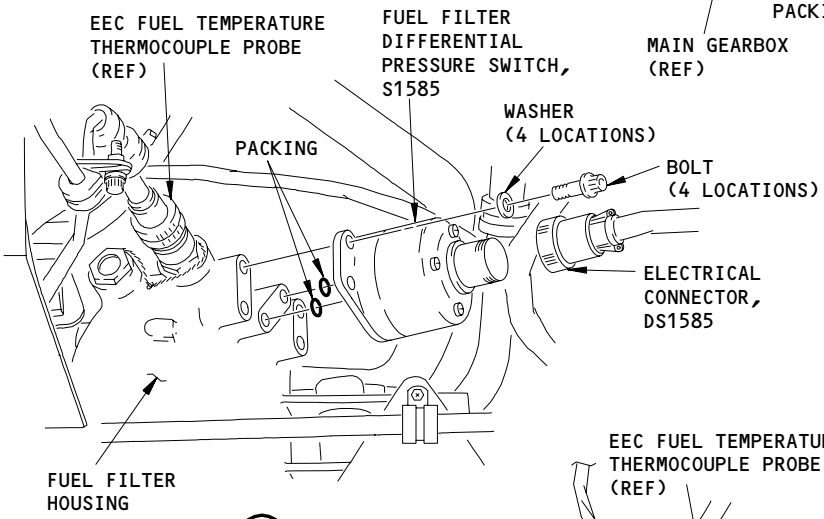

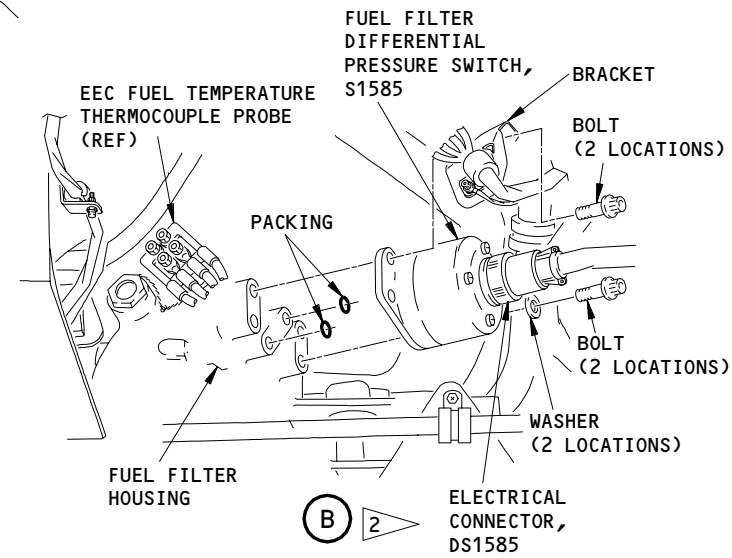

1 ENGINES WITH EEC FUEL TEMPERATURE THERMOCOUPLE PROBE THAT HAS PIN AND SOCKET CONNECTOR

2 ENGINES WITH EEC FUEL TEMPERATURE THERMOCOUPLE PROBE THAT HAS STUD AND LUG CONNECTOR

Fuel Filter Differential Pressure Switch Installation
Figure 401

BOEING PROPRIETARY - Copyright (C) - Unpublished Work - See title page for details.

STATION		BOEING CARD NO.
TAIL NO.	SAS BOEING 767 TASK CARD	73-406-01-1
DATE		AIRLINE CARD NO.

SKILL	WORK AREA	RELATED TASK	INTERVAL	PHASE	MPD REV	TASK CARD REVISION
ENGIN	ENGINES		1C	11212	009	AUG 22/06

TASK	TITLE	STRUCTURAL ILLUSTRATION REFERENCE	APPLICABILITY AIRPLANE	APPLICABILITY ENGINE
OPERATIONAL	ENGINE 1 SUPPLEMENTAL CONTROL UNIT		ALL	NOTE

ZONES	ACCESS PANELS
211 212	

MECH	INSP	MPD ITEM NUMBER

OPERATIONALLY CHECK THE ENGINE 1 SUPPLEMENTAL CONTROL UNIT. N73-21-15-5A
ENGINE NOTE: P&W 4000 ENGINES WITH SCU INSTALLED.

1. <u>SCU 28 VDC Power Circuit Test</u>

A. Special Tools and Equipment

(1) Proximity Sensor, Actuator/Deactuator
A32102-25 (Recommended)
A32102-1 (Alternative)

B. References

(1) AMM 24-22-00/201, Electrical Power

(2) AMM 32-09-02/201, Air/Ground Relays

(3) AMM 71-11-04/201, Fan Cowl Panels

C. Access

(1) Location Zones

211	Control Cabin
212	Control Cabin
414	Fan Cowl Panel (RH)
424	Fan Cowl Panel (RH)
731	Main Landing Gear (L)
741	Main Landing Gear (R)

(2) Access Panels

414AR	Fan Cowl Panel (RH)
424AR	Fan Cowl Panel (RH)

D. Do the SCU Power Test

BOEING PROPRIETARY - Copyright (C) - Unpublished Work - See title page for details.

MECH	INSP

(1) Supply electrical power (AMM 24-22-00/201).

(2) Open these circuit breakers on the overhead circuit breaker panel, P11:

(a) 11L7, L ENG EEC/SCU PWR

(b) 11K28, R ENG EEC/SCU PWR.

(3) Make sure the applicable EEC MAINT L(R) ENG POWER switch is in the NORM position.

(4) Make sure the EPR display on the EICAS is blank.

(5) Put the applicable EEC MAINT L(R) ENG POWER switch to the TEST position.

(6) Make sure the EPR display on the EICAS is blank.

(7) Close these circuit breakers on the overhead circuit breaker panel, P11:

(a) 11L7, L ENG EEC/SCU PWR

(b) 11K28, R ENG EEC/SCU PWR.

(8) Make sure the EPR display on the EICAS reads approximately 1.00.

NOTE: The precision of the EPR indication for this step is not very important. It is used to show that the EEC has power and can send data.

(9) Push the EPCS switch on the EICAS MAINT panel two times to show the EPCS Status Page on EICAS.

(10) Make sure the first digit of label 272 is either 8, 9, A, B, C, D, E, or F.

(a) If the first digit of label 272 is 0, 1, 2, 3, 4, 5, 6, or 7, do a continuity test of the circuit from the SCU to the EEC, as follows:

NOTE: If necessary, open the fan cowl panel (AMM 71-11-04/201).

BOEING PROPRIETARY - Copyright (C) - Unpublished Work - See title page for details.

1) Do a check between pin N on W2P33 (on the SCU) and pin p on D11114 (on the EEC)

2) Do a check between pin N on W2P33 and pin p on D11686 (on the EEC)

3) Do a check between pin C on W2P33 and pin S on D11114

4) Do a check between pin C on W2P33 and pin S on D11686.

(11) Put the applicable EEC MAINT L(R) ENG POWER switch to the NORM position.

(12) Make sure the EPR display on the EICAS is blank.

(13) Make sure these circuit breakers on the overhead circuit breaker panel, P11, are closed:

(a) 11C30, LANDING GEAR POSITION AIR/GND SYS 1

(b) 11U15, AIR/GND SYSTEM 1

(c) 11U24, LANDING GEAR POS AIR/GND SYSTEM 2.

WARNING: PREPARE THE SAFETY-SENSITIVE SYSTEMS FOR THE AIR MODE BEFORE YOU OPEN THE AIR/GROUND CIRCUIT BREAKERS. IN THE AIR MODE, MANY OF THE AIRPLANE SYSTEMS CAN OPERATE AND CAUSE INJURIES TO PERSONS AND DAMAGE TO EQUIPMENT.

(14) Prepare the safety-sensitive systems for air mode simulation (AMM 32-09-02/201).

(15) Connect the target simulator devices to these sensors on the L(R) main gear strut:

(a) S245 L GEAR TILTED SYS 1

(b) S246 R GEAR TILTED SYS 1

(c) S267 L GEAR TILTED SYS 2

(d) S268 R GEAR TILTED SYS 2.

(16) Make sure the EPR display on the EICAS reads approximately 1.00.

BOEING PROPRIETARY - Copyright (C) - Unpublished Work - See title page for details.

MECH	INSP

(17) Disconnect the target simulator devices in this order:

(a) S245 and S267

NOTE: This pair must be disconnected at the same time and in less than 0.5 seconds.

(b) S246 and S268.

(18) Put the L(R) fuel control switch to the RUN position.

(19) Make sure the EPR display on EICAS is blank.

(20) Put the L(R) N2 SPEED CARD-CHAN 1 test switch on the electrical systems cardfile, P50, to the TEST position.

(21) Make sure the EPR display on the EICAS reads approximately 1.00.

(22) Put the L(R) N2 SPEED CARD-CHAN 1 test switch on the electrical systems cardfile, P50, to the NORM position.

(23) Make sure the EPR display on the EICAS reads approximately 1.00.

(24) Put the L(R) fuel control switch to the CUTOFF position.

(25) Make sure the EPR display on EICAS is blank.

E. Put the Airplane to its Usual Condition

(1) Put the safety-sensitive systems back to their initial conditions (AMM 32-09-02/201)

(2) Remove electrical power (AMM 24-22-00/201).

(3) If necessary, close the right fan cowl (AMM 71-11-04/201).

BOEING PROPRIETARY - Copyright (C) - Unpublished Work - See title page for details.

STATION		BOEING CARD NO.
TAIL NO.	SAS BOEING 767 TASK CARD	73-406-01-2
DATE		AIRLINE CARD NO.

SKILL	WORK AREA	RELATED TASK	INTERVAL	PHASE	MPD REV	TASK CARD REVISION
ENGIN	ENGINES		1C	11212	009	AUG 22/06

TASK	TITLE	STRUCTURAL ILLUSTRATION REFERENCE	APPLICABILITY AIRPLANE	APPLICABILITY ENGINE
OPERATIONAL	ENGINE 2 SUPPLEMENTAL CONTROL UNIT		ALL	NOTE

ZONES	ACCESS PANELS
211 212	

MECH	INSP	MPD ITEM NUMBER

OPERATIONALLY CHECK THE ENGINE 2 SUPPLEMENTAL CONTROL UNIT. N73-21-15-5A
ENGINE NOTE: P&W 4000 ENGINES WITH SCU INSTALLED.

1. <u>SCU 28 VDC Power Circuit Test</u>

A. Special Tools and Equipment

(1) Proximity Sensor, Actuator/Deactuator
A32102-25 (Recommended)
A32102-1 (Alternative)

B. References

(1) AMM 24-22-00/201, Electrical Power

(2) AMM 32-09-02/201, Air/Ground Relays

(3) AMM 71-11-04/201, Fan Cowl Panels

C. Access

(1) Location Zones

211	Control Cabin
212	Control Cabin
414	Fan Cowl Panel (RH)
424	Fan Cowl Panel (RH)
731	Main Landing Gear (L)
741	Main Landing Gear (R)

(2) Access Panels

414AR	Fan Cowl Panel (RH)
424AR	Fan Cowl Panel (RH)

D. Do the SCU Power Test

BOEING PROPRIETARY - Copyright (C) - Unpublished Work - See title page for details.

MECH | INSP

(1) Supply electrical power (AMM 24-22-00/201).

(2) Open these circuit breakers on the overhead circuit breaker panel, P11:

(a) 11L7, L ENG EEC/SCU PWR

(b) 11K28, R ENG EEC/SCU PWR.

(3) Make sure the applicable EEC MAINT L(R) ENG POWER switch is in the NORM position.

(4) Make sure the EPR display on the EICAS is blank.

(5) Put the applicable EEC MAINT L(R) ENG POWER switch to the TEST position.

(6) Make sure the EPR display on the EICAS is blank.

(7) Close these circuit breakers on the overhead circuit breaker panel, P11:

(a) 11L7, L ENG EEC/SCU PWR

(b) 11K28, R ENG EEC/SCU PWR.

(8) Make sure the EPR display on the EICAS reads approximately 1.00.

NOTE: The precision of the EPR indication for this step is not very important. It is used to show that the EEC has power and can send data.

(9) Push the EPCS switch on the EICAS MAINT panel two times to show the EPCS Status Page on EICAS.

(10) Make sure the first digit of label 272 is either 8, 9, A, B, C, D, E, or F.

(a) If the first digit of label 272 is 0, 1, 2, 3, 4, 5, 6, or 7, do a continuity test of the circuit from the SCU to the EEC, as follows:

NOTE: If necessary, open the fan cowl panel (AMM 71-11-04/201).

BOEING PROPRIETARY - Copyright (C) - Unpublished Work - See title page for details.

1) Do a check between pin N on W2P33 (on the SCU) and pin p on D11114 (on the EEC)

2) Do a check between pin N on W2P33 and pin p on D11686 (on the EEC)

3) Do a check between pin C on W2P33 and pin S on D11114

4) Do a check between pin C on W2P33 and pin S on D11686.

(11) Put the applicable EEC MAINT L(R) ENG POWER switch to the NORM position.

(12) Make sure the EPR display on the EICAS is blank.

(13) Make sure these circuit breakers on the overhead circuit breaker panel, P11, are closed:

(a) 11C30, LANDING GEAR POSITION AIR/GND SYS 1

(b) 11U15, AIR/GND SYSTEM 1

(c) 11U24, LANDING GEAR POS AIR/GND SYSTEM 2.

WARNING: PREPARE THE SAFETY-SENSITIVE SYSTEMS FOR THE AIR MODE BEFORE YOU OPEN THE AIR/GROUND CIRCUIT BREAKERS. IN THE AIR MODE, MANY OF THE AIRPLANE SYSTEMS CAN OPERATE AND CAUSE INJURIES TO PERSONS AND DAMAGE TO EQUIPMENT.

(14) Prepare the safety-sensitive systems for air mode simulation (AMM 32-09-02/201).

(15) Connect the target simulator devices to these sensors on the L(R) main gear strut:

(a) S245 L GEAR TILTED SYS 1

(b) S246 R GEAR TILTED SYS 1

(c) S267 L GEAR TILTED SYS 2

(d) S268 R GEAR TILTED SYS 2.

(16) Make sure the EPR display on the EICAS reads approximately 1.00.

BOEING PROPRIETARY - Copyright (C) - Unpublished Work - See title page for details.

MECH	INSP

(17) Disconnect the target simulator devices in this order:

(a) S245 and S267

NOTE: This pair must be disconnected at the same time and in less than 0.5 seconds.

(b) S246 and S268.

(18) Put the L(R) fuel control switch to the RUN position.

(19) Make sure the EPR display on EICAS is blank.

(20) Put the L(R) N2 SPEED CARD-CHAN 1 test switch on the electrical systems cardfile, P50, to the TEST position.

(21) Make sure the EPR display on the EICAS reads approximately 1.00.

(22) Put the L(R) N2 SPEED CARD-CHAN 1 test switch on the electrical systems cardfile, P50, to the NORM position.

(23) Make sure the EPR display on the EICAS reads approximately 1.00.

(24) Put the L(R) fuel control switch to the CUTOFF position.

(25) Make sure the EPR display on EICAS is blank.

E. Put the Airplane to its Usual Condition

(1) Put the safety-sensitive systems back to their initial conditions (AMM 32-09-02/201)

(2) Remove electrical power (AMM 24-22-00/201).

(3) If necessary, close the right fan cowl (AMM 71-11-04/201).

BOEING PROPRIETARY - Copyright (C) - Unpublished Work - See title page for details.