STATION		BOEING CARD NO.
TAIL NO.	SAS BOEING 767 TASK CARD	74-R04
DATE		AIRLINE CARD NO.

SKILL	WORK AREA	RELATED TASK	INTERVAL	PHASE	MPD REV	TASK CARD REVISION
ENGIN	ENGIN/STRUT				007	DEC 22/07

TASK	TITLE	STRUCTURAL ILLUSTRATION REFERENCE	APPLICABILITY AIRPLANE	APPLICABILITY ENGINE
REPLACE	IGNITION EXCITER		ALL	4000

ZONES	ACCESS PANELS
410 420	415AL 416AR 425AL 426AR

MECH	INSP	MPD ITEM NUMBER

REPLACE THE IGNITION EXCITER. N74-11-01-4A

THIS CARD IS NOT A SCHEDULED MAINTENANCE TASK. IT IS A COMPONENT CHANGE CARD AND IT IS PROVIDED FOR OPERATOR CONVENIENCE DURING UNSCHEDULED MAINTENANCE ACTIVITIES. SEE APPENDIX A OF THE 767 MAINTENANCE PLANNING DATA (MPD) DOCUMENT,D622T001, FOR A DESCRIPTION OF THE COMPONENT CHANGE CARDS.

1. Ignition Exciter Removal (Fig. 401)

A. References

(1) AMM 71-11-04/201, Fan Cowl Panels

(2) AMM 71-11-06/201, Core Cowl Panels

(3) AMM 78-31-00/201, Thrust Reverser System

B. Access

(1) Location Zones
411 Left Engine
421 Right Engine

(2) Access Panels
414AR Fan Cowl Panel, Left Engine
416AR Thrust Reverser, Left Engine
418AR Core Cowl Panel, Left Engine
424AR Fan Cowl Panel, Right Engine
426AR Thrust Reverser, Right Engine
428AR Core Cowl Panel, Right Engine

C. Prepare to Remove the Ignition Exciter.

BOEING PROPRIETARY - Copyright (C) - Unpublished Work - See title page for details.

MECH	INSP

(1) Open these circuit breakers on the overhead circuit breaker panel, P11, and attach DO-NOT-CLOSE tags:

(a) 11D7, ENGINE STBY IGN 1

(b) 11D8, ENGINE STBY IGN 2

(2) For the left engine, open these circuit breakers on the P11 panel and attach DO-NOT-CLOSE tags:

(a) 11M1, L IGN 1

(b) 11M9, LEFT ENGINE BUS PWR SENSE

(c) 11M28, L IGN 2

(3) For the right engine, open these circuit breakers on the P11 panel and attach DO-NOT-CLOSE tags:

(a) 11M2, R IGN 1

(b) 11M29, R IGN 2

(c) 11M36, RIGHT ENGINE BUS PWR SENSE

(4) Open the right fan cowl panel (AMM 71-11-04/201).

WARNING: DO THE THRUST REVERSER DEACTIVATION PROCEDURE TO PREVENT THE OPERATION OF THE THRUST REVERSERS. THE ACCIDENTAL OPERATION OF THE THRUST REVERSERS CAN CAUSE INJURIES TO PERSONS OR DAMAGE TO EQUIPMENT.

(5) Do this procedure: Thrust Reverser Deactivation for Ground Maintenance (AMM 78-31-00/201).

(6) Open the right core cowl panel (AMM 71-11-06/201).

WARNING: OBEY THE INSTRUCTIONS IN AMM 78-31-00 WHEN YOU OPEN THE THRUST REVERSERS. IF YOU DO NOT OBEY THE INSTRUCTIONS, YOU CAN CAUSE INJURIES TO PERSONS OR DAMAGE TO EQUIPMENT.

(7) Open the right thrust reverser (AMM 78-31-00/201).

BOEING PROPRIETARY - Copyright (C) - Unpublished Work - See title page for details.

MECH	INSP

D. Remove the Ignition Exciter.

WARNING: DO NOT TOUCH THE IGNITION SYSTEM COMPONENTS UNTIL YOU DO THESE STEPS. IF YOU DO NOT OBEY THESE INSTRUCTIONS, INJURIES TO PERSONS CAN OCCUR.

(1) Make sure the ignition switch on the pilot's overhead panel, P5, is in the OFF position.

(a) Stop for a minimum of five minutes.

(2) Remove the bolts (19) and the nuts (17) for the cable that you will remove.

NOTE: The clamp (20) attaches the top and the lower exciter-to-igniter plug cables to the bracket (18).

(a) Remove the bracket from the engine if the two cables are removed.

(3) Disconnect the hose clamp and remove the cooling air hose from the exciter-to-igniter plug cable.

(4) Do these steps to remove the heat shields from the exciter-to-igniter cable:

(a) Disconnect the clamp (14) that attaches the heat shields (15 and 16) at the igniter plug.

1) Remove the heat shields (15 and 16).

(b) Loosen the clamps (6 and 13) that attach the heat shields (3 and 5) at the ignition exciter.

1) Remove the heat shields (3 and 5).

(5) Loosen the coupling nut from the cable connector at the exciter.

(a) Loosen the coupling nut sufficiently to permit free movement of the cable, but do not disconnect the cable.

BOEING PROPRIETARY - Copyright (C) - Unpublished Work - See title page for details.

MECH	INSP

WARNING: MAKE SURE YOU GROUND THE EXCITER-TO-IGNITER CABLE TERMINAL TO THE BODY SHIELD ON THE IGNITER PLUG. THIS WILL RELEASE THE HIGH VOLTAGE FROM THE IGNITION EXCITER. IF YOU DO NOT OBEY THESE INSTRUCTIONS, INJURIES TO PERSONS CAN OCCUR.

CAUTION: PULL THE CABLE END IN A STRAIGHT DIRECTION WHEN YOU DISCONNECT THE CABLE FROM THE IGNITER PLUG AND FROM THE EXCITER. IF YOU APPLY A LATERAL FORCE ON THE CABLE, YOU CAN CAUSE DAMAGE TO THE CABLE.

(6) Do these steps to release the high voltage from the ignition exciter:

(a) Disconnect the cable coupling nut from the igniter plug.

(b) Immediately ground the exciter-to-igniter cable to the body shield on the igniter plug.

(c) Remove the heat shield clamp (14) from the cable.

(7) Disconnect the coupling nut from the connector on the ignition exciter (1 or 2).

(a) Remove the heat shield clamps (6 and 13) from the cable.

(b) Remove the cable from the engine.

(8) Disconnect the electrical connector from the ignition exciter (1 or 2).

(9) Remove and discard the grommets (4) from the cable.

(10) Do these steps to remove the exciter (1 or 2) from the engine:

(a) Remove the bolts (7), washers (9), and nuts (10) that attach the exciter to the mount bracket.

(b) Remove the exciter from the engine.

(c) Remove the heat shields (8 and 12) from the exciter.

(d) Remove and discard the seal (11) from the exciter connector.

(e) Install protective caps on the cable coupling nuts and on the exciter connectors.

BOEING PROPRIETARY - Copyright (C) - Unpublished Work - See title page for details.

MECH | INSP

2. Ignition Exciter Installation (Fig. 401)

A. Consumable Materials

(1) G00834 Cloth - clean and lint-free

(2) D00137 Oil, Engine - PWA 521B Type II

(3) B00772 Solvent - PMC 9087, Trichlorotrifluorethane

(4) D00333 Anti-Seize Compound - PMC 9523, Molykote Type Z

(5) D00453 Compound, Antigalling - Fel Pro C-300 (PWA 36035)

(6) D00405 Compound, Antigalling - (PWA 550-3)

B. Parts

AMM		NOMENCLATURE	AIPC		
FIG	ITEM		SUBJECT	FIG	ITEM
401	1	Ignition Exciter	74-11-01	05	40
	2	Ignition Exciter			40
	4	Grommet			55
	11	Seal	74-11-01	05	18

C. References

(1) AMM 71-11-04/201, Fan Cowl Panels

(2) AMM 71-11-06/201, Core Cowl Panels

(3) AMM 74-00-00/501, Ignition System

(4) AMM 74-11-01/601, Ignition Exciter

(5) AMM 78-31-00/201, Thrust Reverser System

D. Access

BOEING PROPRIETARY - Copyright (C) - Unpublished Work - See title page for details.

(1) Location Zones
411 Left Engine
421 Right Engine

(2) Access Panels
414AR Fan Cowl Panel, Left Engine
416AR Thrust Reverser, Left Engine
418AR Core Cowl Panel, Left Engine
424AR Fan Cowl Panel, Right Engine
426AR Thrust Reverser, Right Engine
428AR Core Cowl Panel, Right Engine

E. Install the Ignition Exciter.

(1) Do these steps to install the exciter (1 or 2) on the engine:

(a) Remove protective caps from the cable coupling nuts and from the exciter connectors.

(b) Install a new seal (11) on the exciter connector.

NOTE: Install the seal on the exciter connector with the smaller diameter. Install the larger diameter of the seal away from the exciter.

(c) Put the exciter in the heat shields (8 and 12).

(d) Lubricate the bolts (7) with the engine oil.

(e) Attach the exciter and the heat shields to the mounting bracket with the bolts (7), washers (9), and nuts (10).

1) Tighten the bolts (7) to 36-40 pound-inches (4.1-4.5 newton-meters).

(2) Do an inspection of the output receptacle on the exciter (AMM 74-11-01/601).

(3) Examine the exciter-to-igniter plug cable (AMM 74-21-01/601).

(4) Install new grommets (4) on the cable ends.

BOEING PROPRIETARY - Copyright (C) - Unpublished Work - See title page for details.

MECH | INSP

WARNING: DO NOT GET THE SOLVENT IN YOUR MOUTH, OR EYES, OR ON YOUR SKIN. DO NOT BREATHE THE FUMES FROM THE SOLVENT. PUT ON A PROTECTIVE SPLASH GOGGLE AND GLOVES WHEN YOU USE THE SOLVENT. THE SOLVENT IS A POISONOUS AND FLAMMABLE SOLVENT THAT CAN CAUSE INJURIES TO PERSONS OR DAMAGE TO EQUIPMENT.

(a) Use the solvent and the lint-free cloth to clean the new grommets.

(b) Install the grommets (4) on the cable.

CAUTION: PUSH THE CABLE END IN A STRAIGHT DIRECTION WHEN YOU CONNECT THE CABLE TO THE IGNITER PLUG AND THE EXCITER. IF YOU APPLY A LATERAL FORCE ON THE CABLE, YOU CAN CAUSE DAMAGE TO THE CABLE.

(5) Do these steps to connect the igniter-to-exciter cable to the igniter plug and exciter:

(a) Install the clamp (14) on the cable end that attaches to the igniter plug.

(b) Lubricate the coupling nut threads that connect to the igniter plug with the antiseize compound.

NOTE: Do not apply too much antiseize compound to the coupling nut, or the cable will not have a good contact.

(c) Connect the cable to the igniter plug.

1) Keep the coupling nut sufficiently loose to permit free movement of the cable.

(d) Install the two clamps (6 and 13) on the cable end that attaches to the exciter.

1) Install the smaller clamp (13) on the cable before you install the larger clamp (6).

BOEING PROPRIETARY - Copyright (C) - Unpublished Work - See title page for details.

MECH	INSP

(e) Lubricate the coupling nut threads that connect to the exciter with the antigalling compound (PWA 36035).

NOTE: Do not apply too much antigalling compound to the coupling nut threads. You can use the PWA 550-3 antigalling compound if you do not have the PWA 36035.

(f) Connect the cable to the output receptacle on the exciter.

(g) Tighten the coupling nuts at each end of the cable.

(6) Install the heat shields at each end of the cable.

(a) FOR ENGINES WITHOUT SB 73-192; Attach the heat shields (3 and 5) at the exciter with the clamps (6 and 13).

1) Tighten the clamp screws to 15.0-18.0 pound-inches (1.7-2.0 newton-meters).

(b) FOR ENGINES WITH SB 73-192; Position heat shield segments over exciter end of cable. Make sure the segment half (3) with hose fittings has the fittings pointed up.

1) Secure segments with clamps (6, 13). Torque clamp screws to 15 - 18 inch-pounds (1.695 - 2.034 N.m).

(c) FOR ENGINES WITH SB 73-192; Install cooling hoses (22) on heat shield fitting (3) and secure with clamps (21). Torque the hose clamps to 10 - 15 inch-pounds (1.130 - 1.695 N.m).

(d) Attach the heat shields (15 and 16) at the igniter plug with the clamp (14).

1) Tighten the clamp screw to 15.0-18.0 pound-inches (1.7-2.0 newton-meters).

(7) Attach the cooling air hose to the exciter-to-igniter plug cable with the clamp.

(8) Connect the electrical connector to the ignition exciter (1 or 2).

F. Put the Airplane Back to its Usual Condition.

BOEING PROPRIETARY - Copyright (C) - Unpublished Work - See title page for details.

MECH	INSP

WARNING: OBEY THE INSTRUCTIONS IN AMM 78-31-00 WHEN YOU CLOSE THE THRUST REVERSERS. IF YOU DO NOT OBEY THE INSTRUCTIONS, YOU CAN CAUSE INJURIES TO PERSONS OR DAMAGE TO EQUIPMENT.

(1) Close the right thrust reverser (AMM 78-31-00/201).

(2) Close the right core cowl panel (AMM 71-11-06/201).

(3) Do the activation procedure for the thrust reverser (AMM 78-31-00/201).

(4) Close the right fan cowl panel (AMM 71-11-04/201).

(5) Remove the DO-NOT-CLOSE tags and close these circuit breakers on the P11 panel:

(a) 11D7, ENGINE STBY IGN 1

(b) 11D8, ENGINE STBY IGN 2

(6) For the left engine, remove the DO-NOT-CLOSE tags and close these circuit breakers on the P11 panel:

(a) 11M1, L IGN 1

(b) 11M9, LEFT ENGINE BUS PWR SENSE

(c) 11M28, L IGN 2

(7) For the right engine, remove the DO-NOT-CLOSE tags and close these circuit breakers on the P11 panel:

(a) 11M2, R IGN 1

(b) 11M29, R IGN 2

(c) 11M36, RIGHT ENGINE BUS PWR SENSE

(8) Do the audible test procedure for the ignition system (AMM 74-00-00/501).

BOEING PROPRIETARY - Copyright (C) - Unpublished Work - See title page for details.

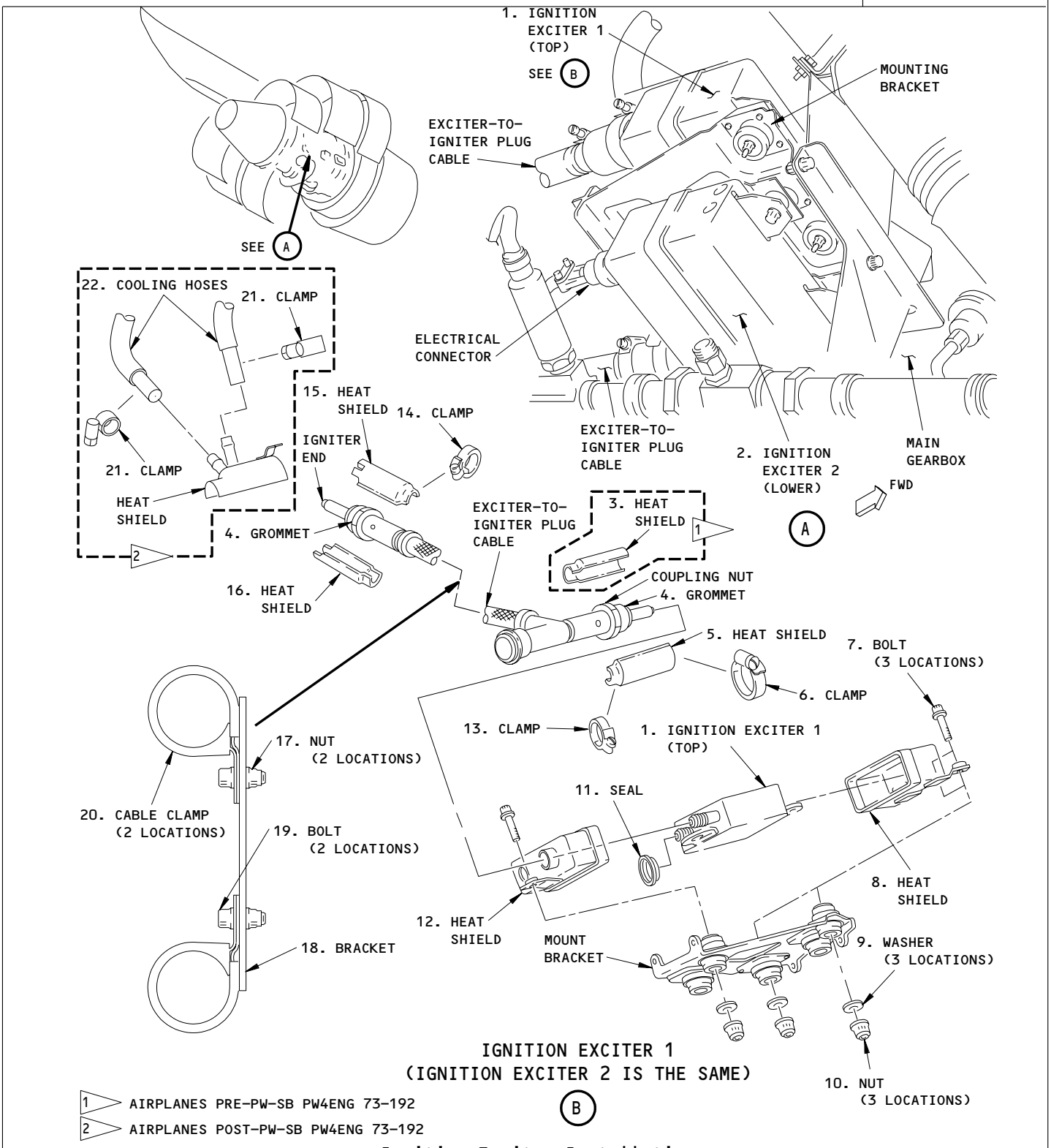

Ignition Exciter Installation
Figure 401

BOEING PROPRIETARY - Copyright (C) - Unpublished Work - See title page for details.

STATION		BOEING CARD NO.
TAIL NO.	SAS BOEING 767 TASK CARD	74-R05
DATE		AIRLINE CARD NO.

SKILL	WORK AREA	RELATED TASK	INTERVAL	PHASE	MPD REV	TASK CARD REVISION
ENGIN	ENGIN/STRUT				007	DEC 22/07

TASK	TITLE	STRUCTURAL ILLUSTRATION REFERENCE	APPLICABILITY AIRPLANE	APPLICABILITY ENGINE
REPLACE	EXCITER-TO-IGNITER PLUG CABLE		ALL	4000

ZONES	ACCESS PANELS
410 420	415AL 416AR 417AL 418AR 425AL 426AR 427AL 428AR

MECH	INSP	MPD ITEM NUMBER

REPLACE THE EXCITER-TO-IGNITER PLUG CABLE. N74-21-01-4A

THIS CARD IS NOT A SCHEDULED MAINTENANCE TASK. IT IS A COMPONENT CHANGE CARD AND IT IS PROVIDED FOR OPERATOR CONVENIENCE DURING UNSCHEDULED MAINTENANCE ACTIVITIES. SEE APPENDIX A OF THE 767 MAINTENANCE PLANNING DATA (MPD) DOCUMENT,D622T001, FOR A DESCRIPTION OF THE COMPONENT CHANGE CARDS.

1. Exciter-to-Igniter Plug Cable Removal (Fig. 401)

A. References

(1) AMM 71-11-04/201, Fan Cowl Panels

(2) AMM 71-11-06/201, Core Cowl Panels

(3) AMM 78-31-00/201, Thrust Reverser System

B. Access

(1) Location Zones
411 Left Engine
421 Right Engine

(2) Access Panels
414AR Fan Cowl Panel, Left Engine
416AR Thrust Reverser, Left Engine
418AR Core Cowl Panel, Left Engine
424AR Fan Cowl Panel, Right Engine
426AR Thrust Reverser, Right Engine
428AR Core Cowl Panel, Right Engine

C. Prepare to Remove the Exciter-to-Igniter Plug Cable.

BOEING PROPRIETARY - Copyright (C) - Unpublished Work - See title page for details.

MECH	INSP

(1) Open these circuit breakers on the overhead circuit breaker panel, P11, and attach DO-NOT-CLOSE tags:

(a) 11D7, ENGINE STBY IGN 1

(b) 11D8, ENGINE STBY IGN 2

(2) For the left engine, open these circuit breakers on the P11 panel and attach DO-NOT-CLOSE tags:

(a) 11M1, L IGN 1

(b) 11M9, LEFT ENGINE BUS PWR SENSE

(c) 11M28, L IGN 2

(3) For the right engine, open these circuit breakers on the P11 panel and attach DO-NOT-CLOSE tags:

(a) 11M2, R IGN 1

(b) 11M29, R IGN 2

(c) 11M36, RIGHT ENGINE BUS PWR SENSE

(4) Open the right fan cowl panel (AMM 71-11-04/201).

WARNING: DO THE THRUST REVERSER DEACTIVATION PROCEDURE TO PREVENT THE OPERATION OF THE THRUST REVERSERS. THE ACCIDENTAL OPERATION OF THE THRUST REVERSERS CAN CAUSE INJURIES TO PERSONS OR DAMAGE TO EQUIPMENT.

(5) Do this procedure: Thrust Reverser Deactivation for Ground Maintenance (AMM 78-31-00/201).

(6) Open the right core cowl panel (AMM 71-11-06/201).

WARNING: OBEY THE INSTRUCTIONS IN AMM 78-31-00 WHEN YOU OPEN THE THRUST REVERSERS. IF YOU DO NOT OBEY THE INSTRUCTIONS, YOU CAN CAUSE INJURIES TO PERSONS OR DAMAGE TO EQUIPMENT.

(7) Open the right thrust reverser (AMM 78-31-00/201).

BOEING PROPRIETARY - Copyright (C) - Unpublished Work - See title page for details.

MECH	INSP

D. Remove the Exciter-to-Igniter Plug Cable.

WARNING: DO NOT TOUCH THE IGNITION SYSTEM COMPONENTS UNTIL YOU DO THESE STEPS. IF YOU DO NOT OBEY THESE INSTRUCTIONS, INJURIES TO PERSONS CAN OCCUR.

(1) Make sure the ignition switch on the pilot's overhead panel, P5, is in the OFF position.

(a) Stop for a minimum of five minutes.

(2) Remove the bolt (18) and nut (17) that attach the clamp (16).

NOTE: The clamp (16) attaches to a bracket that connects the top and the lower exciter-to-igniter plug cables together.

(a) If you will remove the top and the lower cables, remove the bracket from the engine.

(3) Disconnect the hose clamp (2) to remove the cooling air hose from the exciter-to-igniter plug cable (1 or 3).

(4) Do these steps to remove the heat shields at each end of the exciter-to-igniter plug cable:

(a) Loosen the clamp (5) that attaches the heat shields (4 and 9) at the igniter plug.

1) Remove the heat shields (4 and 9) from the cable.

(b) FOR ENGINES WITH SB 73-192; Loosen the clamps (19) that attach cooling hoses (20) to the heat shield (6) at the exciter end of the cable. Remove cooling hoses from the heat shield.

NOTE: Pre SB PW4ENG 73-192 engines do not have W5/W6 wiring harness connector cooling.

(c) Loosen the clamps (5 and 8) that attach the heat shields (6 and 7) at the ignition exciter end of the cable.

1) Remove the heat shields (6 and 7) from the cable.

(5) Loosen the coupling nut on the connector at the exciter.

BOEING PROPRIETARY - Copyright (C) - Unpublished Work - See title page for details.

(a) Loosen the coupling nut sufficiently to permit free movement of the cable, but do not disconnect the cable.

WARNING: MAKE SURE YOU GROUND THE TERMINAL OF THE EXCITER-TO-IGNITER PLUG CABLE TO THE BODY SHIELD ON THE IGNITER PLUG. THIS WILL RELEASE THE HIGH VOLTAGE FROM THE IGNITION EXCITER. IF YOU DO NOT OBEY THESE INSTRUCTIONS, INJURIES TO PERSONS CAN OCCUR.

CAUTION: PULL THE CABLE END IN A STRAIGHT DIRECTION WHEN YOU DISCONNECT THE CABLE FROM THE IGNITER PLUG AND FROM THE EXCITER. IF YOU APPLY A LATERAL FORCE ON THE CABLE, YOU CAN CAUSE DAMAGE TO THE CABLE.

(6) Do these steps to release the high voltage from the ignition exciter:

(a) Disconnect the cable coupling nut from the igniter plug.

(b) Immediately ground the exciter-to-igniter plug cable to the body shield on the igniter plug.

(c) Remove the heat shield clamp (5) from the cable.

(7) Disconnect the coupling nut from the connector on the ignition exciter.

(a) Remove the heat shield clamps (5 and 8) from the cable.

(8) Remove the cable (1 or 3) from the engine.

(a) Remove and discard the grommets (13) from the cable ends.

(b) Install protective caps to the coupling nuts at each end of the cable.

(c) Install protective caps on connectors of the exciter and the igniter plug.

2. Exciter-to-Igniter Plug Cable Installation (Fig. 401)

A. Consumable Materials

(1) D00333 Anti-Seize Compound - PMC 9523, Molykote Type Z

BOEING PROPRIETARY - Copyright (C) - Unpublished Work - See title page for details.

(2) D00453 Antigalling Compound - FelPro C300 (PWA 36035)

(3) D00405 Antigalling Compound - (PWA 550-3)

(4) D00137 Oil, Engine - PWA 521B Type II

(5) B00772 Solvent - PMC 9087, Trichlorotrifluorethane

(6) G00834 Cloth, clean and lint-free

B. Parts

AMM		NOMENCLATURE	AIPC		
FIG	ITEM		SUBJECT	FIG	ITEM
401	1	Cable - Upper Exciter-to-Igniter Plug	74-21-01	05	35
	3	Cable - Lower Exciter-to-Igniter Plug	74-21-01	05	35
	13	Grommet	74-21-01	05	55

C. References

(1) AMM 71-11-04/201, Fan Cowl Panels

(2) AMM 71-11-06/201, Core Cowl Panels

(3) AMM 74-00-00/501, Ignition System

(4) AMM 74-21-01/601, Exciter-to-Igniter Plug Cable

(5) AMM 74-21-01/701, Exciter-to-Igniter Plug Cable

(6) AMM 74-21-02/601, Igniter Plug

(7) AMM 74-21-02/701, Igniter Plug

(8) AMM 78-31-00/201, Thrust Reverser System

D. Access

BOEING PROPRIETARY - Copyright (C) - Unpublished Work - See title page for details.

(1) Location Zones
411 Left Engine
421 Right Engine

(2) Access Panels
414AR Fan Cowl Panel, Left Engine
416AR Thrust Reverser, Left Engine
418AR Core Cowl Panel, Left Engine
424AR Fan Cowl Panel, Right Engine
426AR Thrust Reverser, Right Engine
428AR Core Cowl Panel, Right Engine

E. Install the Exciter-to-Igniter Plug Cable.

(1) Remove the protective caps from each end of the cable (1 or 3).

(2) Examine the exciter-to-igniter plug cable (AMM 74-21-01/601).

(a) If it is necessary, clean the exciter-to-igniter plug cable (AMM 74-21-01/701).

(3) Examine the high tension contacts, sleeves, (11), and rubber bushings (12), while they are assembled, for signs of arcs or flashover (AMM 74-21-01/601).

NOTE: The signs of arcs are discoloration and concentrations of corrosion at a point. The signs of flashover are carbon tracking marks.

(a) If you find sings of arcs or flashover, do the steps that follow.

1) Remove and discard the retaining ring (10).

2) Remove the sleeve (11) and the rubber bushing (12) from the cable.

a) Discard the rubber bushing (12).

BOEING PROPRIETARY - Copyright (C) - Unpublished Work - See title page for details.

WARNING: DO NOT GET THE SOLVENT IN YOUR MOUTH, OR EYES, OR ON YOUR SKIN. DO NOT BREATHE THE FUMES FROM THE SOLVENT. PUT ON A PROTECTIVE SPLASH GOGGLE AND GLOVES WHEN YOU USE THE SOLVENT. KEEP THE SOLVENT AWAY FROM SPARKS, FLAME, AND HEAT. THE SOLVENT IS A POISONOUS AND FLAMMABLE SOLVENT, AND CAN CAUSE INJURIES TO PERSONS OR DAMAGE TO EQUIPMENT.

3) Use the solvent and the lint-free cloth to clean the new rubber bushing (12).

4) Move the rubber bushing (12) on the high tension cable.

NOTE: Make sure there is no grease on the external surface of the insulator or on the plug assembly.

5) Move the clean sleeve (11) on the bushing (12) on the high tension cable.

6) Install a new retaining ring (10) on the cable.

(4) If the cable is not a new cable, install new grommets (13) on each end of the cable.

NOTE: Make sure the washer (14) and the spring (15) are installed on the cable ends before you install the grommets (13).

WARNING: DO NOT GET THE SOLVENT IN YOU MOUTH, OR EYES, OR ON YOUR SKIN. DO NOT BREATHE THE FUMES FROM THE SOLVENT. PUT ON A PROTECTIVE SPLASH GOGGLE AND GLOVES WHEN YOU USE THE SOLVENT. KEEP THE SOLVENT AWAY FROM SPARKS, FLAME, AND HEAT. THE SOLVENT IS A POISONOUS AND FLAMMABLE SOLVENT, AND CAN CAUSE INJURIES TO PERSONS OR DAMAGE TO EQUIPMENT.

(a) Use the solvent and a lint-free cloth to clean the new grommets.

(b) Install the grommet (13) on the cable.

(5) Remove the protective caps from ignition exciter and from the igniter plug.

BOEING PROPRIETARY - Copyright (C) - Unpublished Work - See title page for details.

MECH	INSP

(6) Examine the igniter plug (AMM 74-21-02/601).

(a) If it is necessary, clean the igniter plug (AMM 74-21-02/701).

CAUTION: PUSH THE CABLE END IN A STRAIGHT DIRECTION WHEN YOU CONNECT THE CABLE TO THE IGNITER PLUG AND THE EXCITER. IF YOU APPLY A LATERAL FORCE ON THE CABLE, YOU CAN CAUSE DAMAGE TO THE CABLE.

(7) Do these steps to connect the igniter-to-exciter plug cable to the exciter and the igniter plug:

(a) Install the clamp (5) on the cable end that attaches to the igniter plug.

(b) Lubricate the coupling nut threads that connect to the igniter plug with the antiseize compound.

NOTE: Do not apply too much antiseize compound to the coupling nut, or the cable will not have a good contact.

(c) Connect the cable to the igniter plug.

1) Keep the coupling nut sufficiently loose to permit free movement of the cable.

(d) Install the two clamps (5 and 8) on the cable end that attaches to the exciter.

1) Install the smaller clamp (5) on the cable before you install the larger clamp (8).

(e) Lubricate the coupling nut threads that connect to the exciter with the antigalling compound (PWA 36035).

NOTE: Do not apply too much antigalling compound to the coupling nut threads. You can use the PWA 550-3 antigalling compound if you do not have the PWA 36035.

(f) Connect the cable to the output receptacle on the exciter.

(g) Tighten the coupling nuts at each end of the cable until the nuts touch (bottom) on the shoulder of the nuts.

BOEING PROPRIETARY - Copyright (C) - Unpublished Work - See title page for details.

1) This torque is usually 140-160 pound-inches (15.8-18.1 newton-meters).

(8) Install the heat shields at each end of the cable.

(a) FOR ENGINES WITHOUT SB 73-192; Attach the heat shields (6 and 7) at the exciter with the clamps (6 and 13).

1) Tighten the clamp screws to 15-18 pound-inches (1.7-2.0 newton-meters).

(b) FOR ENGINES WITH SB 73-192; Position heat shield segments (6, 7) over exciter end of cable. Make sure the segment half (6) with hose fittings has the fittings pointed up.

1) Secure segments with clamps (5, 8). Torque clamp screws to 15 - 18 inch-pounds (1.695 - 2.034 N.m).

(c) FOR ENGINES WITH SB 73-192; Install cooling hoses (20) on heat shield fitting (6) and secure with clamps (19). Torque the hose clamps to 10 - 15 inch-pounds (1.130 - 1.695 N.m).

(d) Install the heat shields (4 and 9) at the igniter plug.

1) Bend the tabs of the heat shields into the groove in the boss, and attach the heat shields with the clamp (5).

2) Tighten the clamp screw to 15-18 pound-inches (1.7-2.0 newton-meters).

(9) Attach the cooling air hose to the cable with the clamp (2).

(10) Install the cable clamp (16) on the cable.

(a) Lubricate the threads of the bolt (18) with the engine oil.

(b) Attach the cable clamp (16) to the bracket with the bolt (18) and the nut (17).

(c) Tighten the nut (17) to 36-40 pound-inches (4.0-4.5 newton-meters).

F. Put the Airplane Back to its Usual Condition.

BOEING PROPRIETARY - Copyright (C) - Unpublished Work - See title page for details.

MECH	INSP

WARNING: OBEY THE INSTRUCTIONS IN AMM 78-31-00 WHEN YOU CLOSE THE THRUST REVERSERS. IF YOU DO NOT OBEY THE INSTRUCTIONS, YOU CAN CAUSE INJURIES TO PERSONS OR DAMAGE TO EQUIPMENT.

(1) Close the right thrust reverser (AMM 78-31-00/201).

(2) Close the right core cowl panel (AMM 71-11-06/201).

(3) Do the activation procedure for the thrust reverser (AMM 78-31-00/201).

(4) Close the right fan cowl panel (AMM 71-11-04/201).

(5) Remove the DO-NOT-CLOSE tags and close these circuit breakers on the P11 panel:

(a) 11D7, ENGINE STBY IGN 1

(b) 11D8, ENGINE STBY IGN 2

(6) For the left engine, remove the DO-NOT-CLOSE tags and close these circuit breakers on the P11 panel:

(a) 11M1, L IGN 1

(b) 11M9, LEFT ENGINE BUS PWR SENSE

(c) 11M28, L IGN 2

(7) For the right engine, remove the DO-NOT-CLOSE tags and close these circuit breakers on the P11 panel:

(a) 11M2, R IGN 1

(b) 11M29, R IGN 2

(c) 11M36, RIGHT ENGINE BUS PWR SENSE

(8) Do the audible test of the engine ignition system (AMM 74-00-00/501).

BOEING PROPRIETARY - Copyright (C) - Unpublished Work - See title page for details.

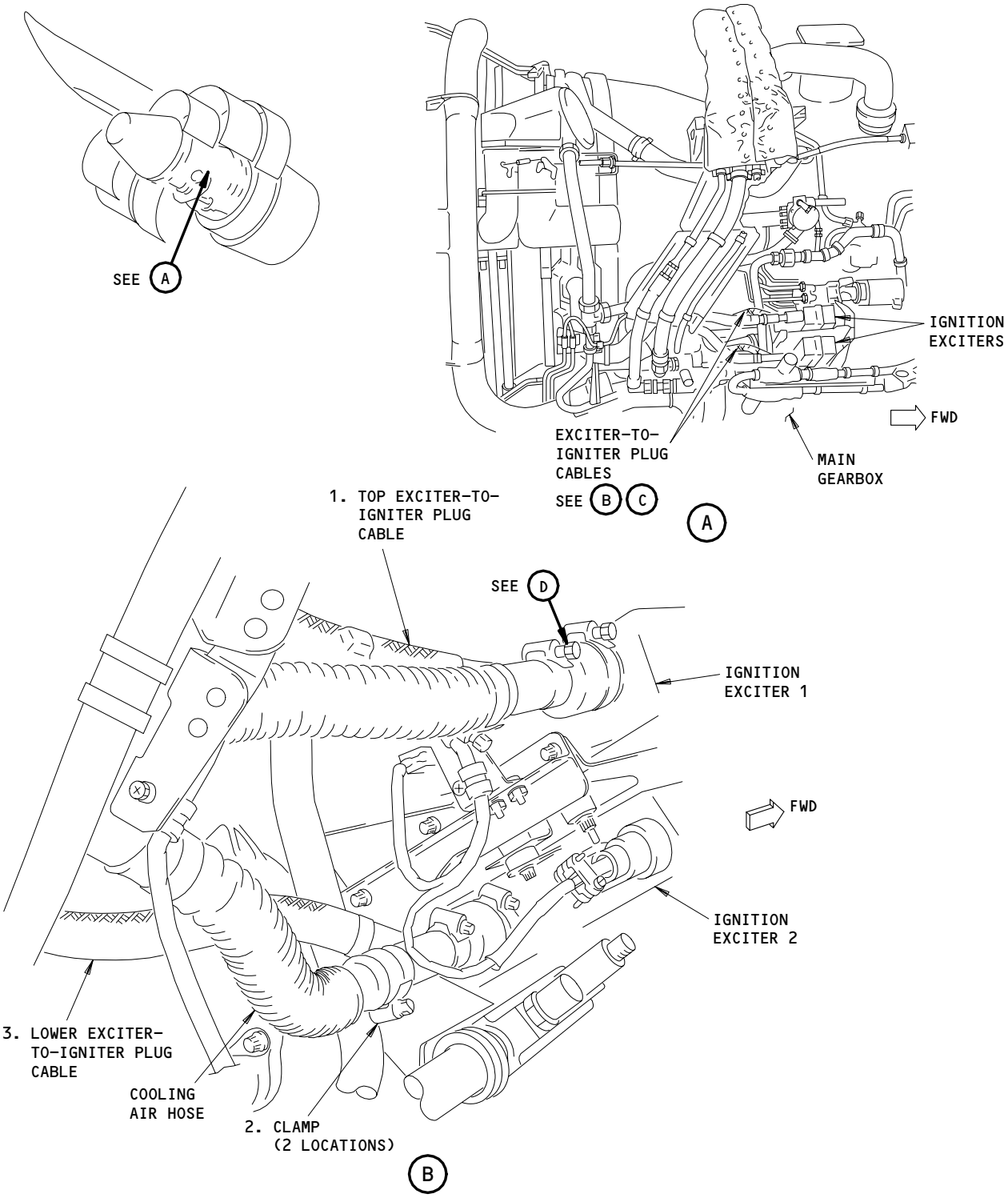

Exciter-To-Igniter Plug Cable Installation
Figure 401 (Sheet 1)

BOEING PROPRIETARY - Copyright (C) - Unpublished Work - See title page for details.

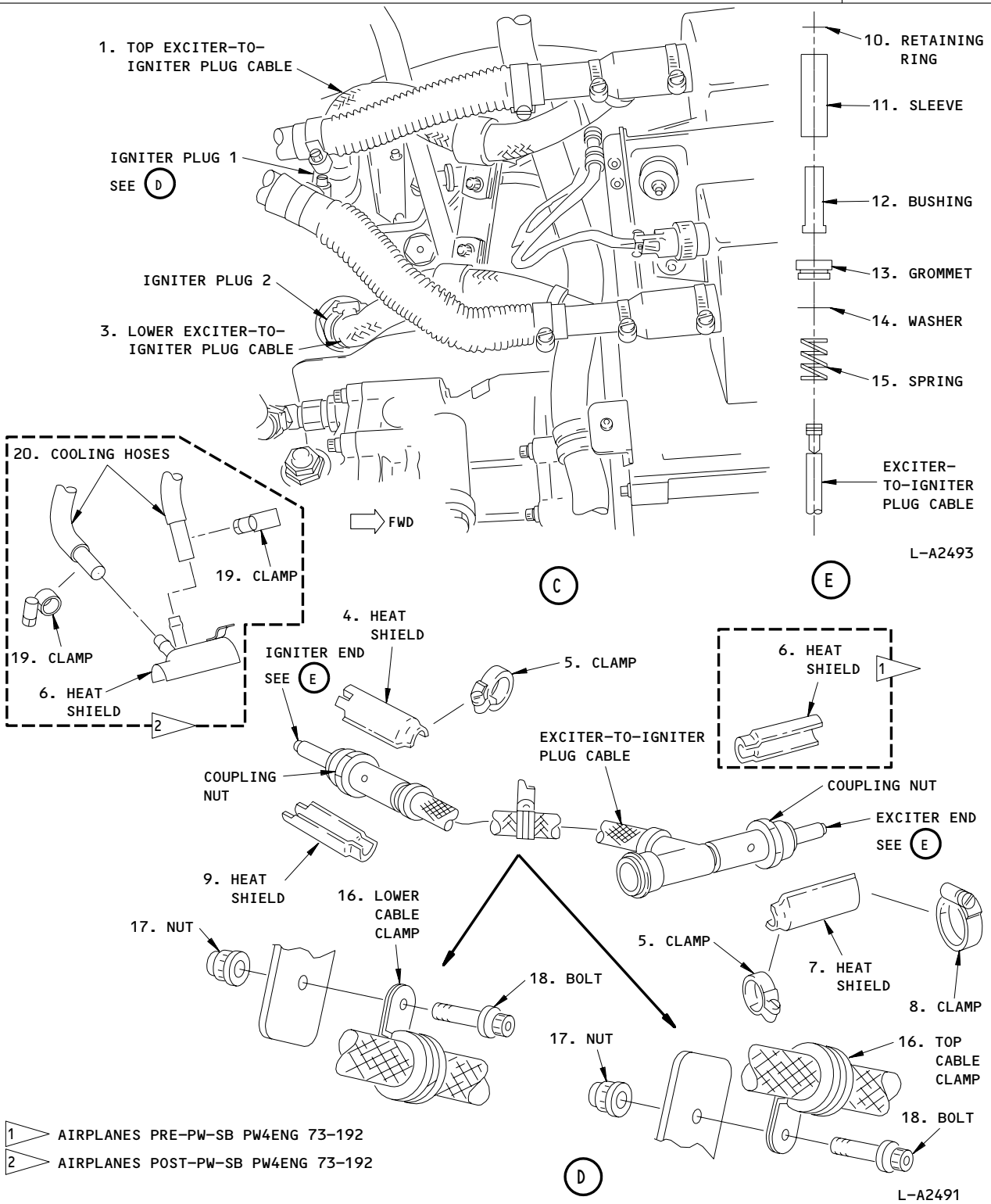

Exciter-To-Igniter Plug Cable Installation
Figure 401 (Sheet 2)

BOEING PROPRIETARY - Copyright (C) - Unpublished Work - See title page for details.

SKILL	WORK AREA	RELATED TASK	INTERVAL	PHASE	MPD REV	TASK CARD REVISION
ENGIN	ENGIN/STRUT				007	APR 22/08

TASK	TITLE	STRUCTURAL ILLUSTRATION REFERENCE	APPLICABILITY AIRPLANE	APPLICABILITY ENGINE
REPLACE	IGNITER PLUG		ALL	4000

ZONES	ACCESS PANELS
410 420	417AL 418AR 427AL 428AR

MECH | INSP | MPD ITEM NUMBER

REPLACE THE IGNITER PLUG. N74-21-02-4A

THIS CARD IS NOT A SCHEDULED MAINTENANCE TASK. IT IS A COMPONENT CHANGE CARD AND IT IS PROVIDED FOR OPERATOR CONVENIENCE DURING UNSCHEDULED MAINTENANCE ACTIVITIES. SEE APPENDIX A OF THE 767 MAINTENANCE PLANNING DATA (MPD) DOCUMENT,D622T001, FOR A DESCRIPTION OF THE COMPONENT CHANGE CARDS.

1. General

A. Each engine has two igniter plugs. One of the igniter plugs is located at the 4 o'clock position and the other is located at the 5 o'clock position on the diffuser case (aft looking foward). The upper igniter plug is part of ignition system 1 (upper exciter). The lower igniter plug is part of ignition system 2 (lower exciter).

B. If the igniter plug boss is not removed then the immersion depth does not need to be measured. If the igniter plug boss is removed then you must measure the immersion depth when you install the igniter plug. The igniter plug boss will be referred to as the boss.

2. Remove the Igniter Plug (Fig. 401)

A. References

(1) AMM 71-11-06/201, Core Cowl Panels

(2) AMM 78-31-00/201, Thrust Reverser System

B. Access

(1) Location Zones
411 Left Engine
421 Right Engine

BOEING PROPRIETARY - Copyright (C) - Unpublished Work - See title page for details.

MECH	INSP

(2) Access Panels
418AR Core cowl (Right), Left Engine
428AR Core cowl (Right), Right Engine

C. Prepare to Remove the Igniter Plug

(1) Open this overhead panel P11 circuit breakers and attach a DO-NOT-CLOSE tag:

(a) 11D7, ENGINE STBY IGN 1

(b) 11D8, ENGINE STBY IGN 2

(2) For the left engine, open these overhead panel P11 circuit breakers and attach a DO-NOT-CLOSE tag:

(a) 11M1, L IGN 1

(b) 11M9, LEFT ENGINE BUS PWR SENSE

(c) 11M28, L IGN 2

(3) For the right engine, open these overhead panel P11 circuit breakers and attach a DO-NOT-CLOSE tag:

(a) 11M2, R IGN 1

(b) 11M29, R IGN 2

(c) 11M36, RIGHT ENGINE BUS PWR SENSE

WARNING: DO THE THRUST REVERSER DEACTIVATION PROCEDURE TO PREVENT THE OPERATION OF THE THRUST REVERSER. ACCIDENTAL OPERATION OF THE THRUST REVERSER CAN CAUSE INJURY TO PERSONS OR DAMAGE TO EQUIPMENT.

(4) Do this procedure: Thrust Reverser Deactivation for Ground Maintenance (AMM 78-31-00/201).

(5) Open the right core cowl panel (AMM 71-11-06/201).

D. Procedure

BOEING PROPRIETARY - Copyright (C) - Unpublished Work - See title page for details.

MECH	INSP

WARNING: THE IGNITION SWITCH MUST BE IN THE OFF POSITION BEFORE REMOVAL OF ANY IGNITION COMPONENTS. MAKE SURE THE IGNITION SYSTEM IS DE-ENERGIZED FOR AT LEAST ONE MINUTE BEFORE YOU REMOVE ANY IGNITION COMPONENTS. WHEN THE CABLE IS DISCONNECTED FROM THE IGNITER PLUG, GROUND THE CABLE TO MAKE SURE THAT ALL OF THE ENERGY IS OUT OF THE SYSTEM. FAILURE TO FOLLOW THIS PROCEDURE CAN CAUSE INJURY TO PERSONS.

(1) Remove the Igniter Plug:

(a) Remove the bolt (7) and the nut (8) to release the applicable exciter-to-igniter plug cable from the bracket (9).

NOTE: If both igniter plugs are removed then remove bracket (9).

(b) Remove the heatshields (3, 5).

1) Loosen the clamp (4) that holds the heatshields around the igniter plug (2).

2) The clamp may remain on the cable.

(c) Loosen the clamps and remove the heatshields at the exciter end of the cable.

(d) Loosen the coupling nut that holds the Exciter-to-Igniter Plug cable to the exciter.

1) Loosen the nut so the cable can move but do not disconnect the connector.

(e) Loosen the coupling nut that holds the Exciter-to-Igniter plug cable to the igniter plug (2).

CAUTION: ONLY USE FORCE IN AN AXIAL DIRECTION TO DISCONNECT THE EXCITER-TO-IGNITER PLUG CABLE. DO NOT USE LATERAL FORCE OR THE CABLE END CAN BE DAMAGED.

(f) Pull the cable from the igniter plug (2) and touch the igniter plug casing with the cable end to discharge any residual charge.

BOEING PROPRIETARY - Copyright (C) - Unpublished Work - See title page for details.

1) Remove the heatshield clamp (4) from the cable.

(g) Disconnect the coupling nut from the ignition exciter and remove the cable from the engine.

(h) Discard the grommets from the cable ends.

(i) Install protective caps on the cable ends.

(j) Hold the igniter boss with a wrench and remove the igniter plug (2) from the diffuser case.

NOTE: Do not remove the lockwire from the igniter boss. If you remove the igniter boss then you must measure the immersion depth before you install the igniter plug.

(k) If the keywasher (1) is damaged or worn, then remove and discard keywasher.

3. Install the Igniter Plug (Fig. 401)

A. Consumable Materials

(1) G00834 Cloth - Cotton, Lintfree

(2) D00244 Antiseize - Silver Goop, PWA 36001 (PWA 9940)

(3) D00333 Compound - Antiseize PMC 9523, Molykote, Type Z

(4) B00782 Solvent - Trichlorotrifluoroethane, PMC 9087

(5) B00192 Solvent - Petroleum, PMC 9001

(6) D00405 Compound - Antigalling, (PWA 550-3)

(7) D00453 Compound - Antigalling, Fel Pro C300 (PWA 36035)

B. Parts

BOEING PROPRIETARY - Copyright (C) - Unpublished Work - See title page for details.

MECH | INSP

AMM		NOMENCLATURE	AIPC		
FIG	ITEM		SUBJECT	FIG	ITEM
401	1	Keywasher	74-21-02	05	10
	2	Igniter Plug			5
	6	Grommet	74-21-01	05	55

C. References

(1) AMM 71-11-06/201, Core Cowl Panels

(2) AMM 74-00-00/501, Ignition

(3) AMM 74-21-02/601, Igniter Plug

(4) AMM 78-31-00/201, Thrust Reverser System

D. Access

(1) Location Zones
411 Left Engine
421 Right Engine

(2) Access Panels
418AR Core cowl (Right), Left Engine
428AR Core cowl (Right), Right Engine

E. Prepare to Install the Igniter Plug

(1) Do the step that follows if the igniter boss on the diffuser case was removed:

(a) Do the check of the immersion depth of the igniter plug (AMM 74-21-02/601).

(2) If the keywasher was removed, install a new keywasher (1) on the igniter boss.

(a) Bend the tabs of the keywasher to connect it to the igniter boss.

BOEING PROPRIETARY - Copyright (C) - Unpublished Work - See title page for details.

MECH	INSP

(3) If necessary, clean the igniter plug threads with petroleum solvent to remove carbon deposits and thread lubricants.

F. Procedure

(1) Install the igniter plug:

CAUTION: DO NOT USE SILVER GOOP ON THE IGNITER PLUG THREADS IF A DIFFERENT LUBRICANT WAS USED BEFORE. IF SILVER GOOP IS USED WERE OTHER LUBRICANTS WERE USED, IT CAN BECOME HARD AFTER THE ENGINE OPERATES.

(a) Apply a layer of antiseize (Silver Goop) to the threads of the igniter plug (2).

NOTE: Do not apply to much antiseize to the igniter plug threads.

(b) Install the igniter plug (2) to the igniter boss.

1) Hold the igniter boss with a wrench and tighten the igniter plug (2) to 300-360 pound-inches (33.9-40.7 newton-meters).

(c) Remove the protective caps from the ends of the cable.

(d) Inspect the cable end and the high tension contact for arcing or carbon tracking (AMM 74-21-02/601).

(e) Install new grommets on the ends of the cable.

WARNING: ONLY USE THE CLEANING FLUIDS IN AN AREA THAT PERMITS A FREE MOVEMENT OF AIR. THE CLEANING FLUIDS ARE VERY FLAMMABLE AND TOXIC. DO NOT BREATHE THE VAPORS OR LET THE CLEANING FLUIDS TOUCH YOUR SKIN FOR A LONG PERIOD OF TIME.

1) Clean the new grommets with a lint-free cloth moistened with the trichlorotriflouroethane solvent.

2) Slide the new grommets onto the cable.

BOEING PROPRIETARY - Copyright (C) - Unpublished Work - See title page for details.

MECH	INSP

(f) Install the heat shield clamp (4) over the igniter plug end of the Exciter-to-Igniter Plug cable.

(g) Apply a thin layer of antiseize compound to the threads of the cable coupling nut on the igniter plug end.

NOTE: Do not apply too much antiseize compound.

CAUTION: ONLY USE FORCE IN AN AXIAL DIRECTION WHEN YOU CONNECT THE ENDS OF THE EXCITER-TO-IGNITER PLUG CABLE. IF YOU USE FORCE IN THE LATERAL DIRECTION THE CABLE END CAN BE DAMAGED.

(h) Connect the Igniter-to-Exciter cable to the igniter plug (2) but do not tighten the cable coupling nut.

(i) Install the heatshield clamps, smaller clamp first, over the exciter end of the cable.

(j) Apply a thin layer of antigalling compound (PWA 36035) to the threads of the cable coupling nut on the exciter end of the cable.

NOTE: You can use PWA 550-3 antigalling compound as an alternative if the PWA 36035 antigalling compound is not available. Do not apply too much compound.

CAUTION: ONLY USE FORCE IN AN AXIAL DIRECTION WHEN YOU CONNECT THE ENDS OF THE EXCITER-TO-IGNITER PLUG CABLE. IF YOU USE FORCE IN THE LATERAL DIRECTION THE CABLE END CAN BE DAMAGED.

(k) Connect the Igniter-to-Exciter cable to the ignition exciter but do not tighten the cable coupling nut.

(l) Tighten both of the coupling nuts to 140-160 pound-inches (15.8-18.1 newton-meters).

(m) Install the heatshields (3, 5) at the igniter plug with the clamp (4).

BOEING PROPRIETARY - Copyright (C) - Unpublished Work - See title page for details.

1) Bend the tabs of the heatshields into the groove in the igniter boss before you attach the clamp.

(n) Install the heatshields at the exciter end of the Exciter-to-Igniter Plug cable.

1) Tighten the clamp screws to 15-18 pound-inches (1.7-2.0 newton-meters).

(o) Install the bolt (7) and nut (8) to attach the clamp to the bracket (9).

1) Lubricate the bolt (7) with engine oil.

2) Tighten the bolt (7) and the nut (8) to 36-40 pound-inches (4.1-4.5 newton-meters).

G. Return the Aircraft to Its Usual Condition.

(1) Remove the DO-NOT-CLOSE tag and close these overhead panel P11 circuit breakers:

(a) 11D7, ENGINE STBY IGN 1

(b) 11D8, ENGINE STBY IGN 2

(2) For the left engine, remove the DO-NOT-CLOSE tag and close these overhead panel P11 circuit breakers:

(a) 11M1, L IGN 1

(b) 11M9, LEFT ENGINE BUS PWR SENSE

(c) 11M28, L IGN 2

(3) For the right engine, remove the DO-NOT-CLOSE tag and close these overhead panel P11 circuit breakers:

(a) 11M2, R IGN 1

(b) 11M29, R IGN 2

(c) 11M36, RIGHT ENGINE BUS PWR SENSE

(4) Close the right core cowl panel (AMM 71-11-06/201).

BOEING PROPRIETARY - Copyright (C) - Unpublished Work - See title page for details.

MECH	INSP

(5) Do the activation procedure for the thrust reversers (AMM 78-31-00/201).

(6) Do the ignition system audible check (AMM 74-00-00/501).

BOEING PROPRIETARY - Copyright (C) - Unpublished Work - See title page for details.

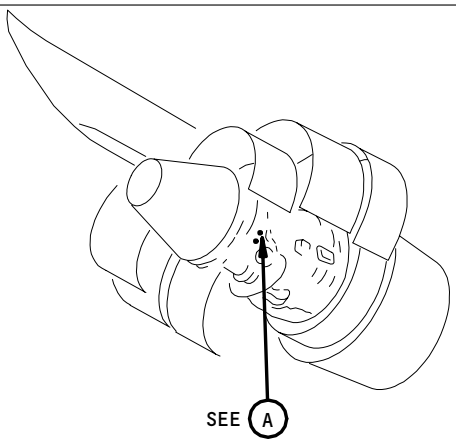

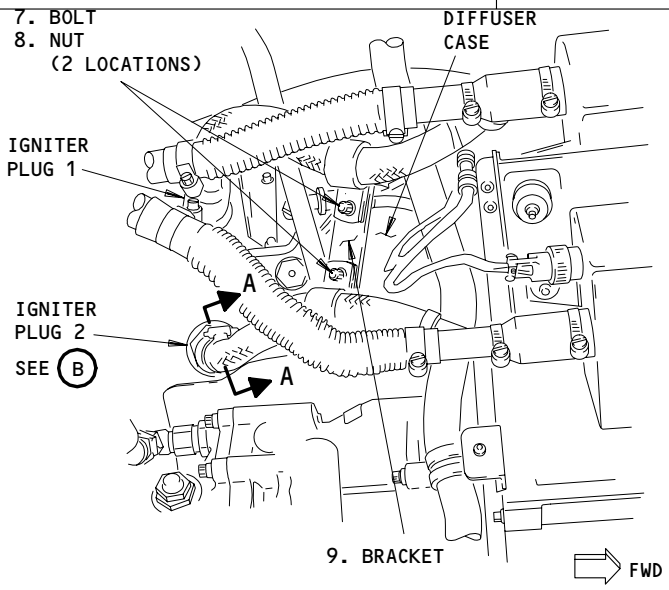

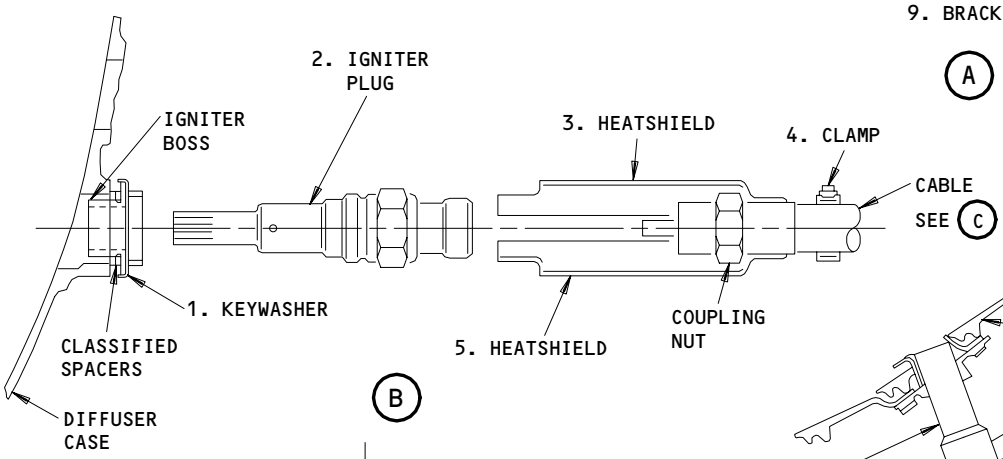

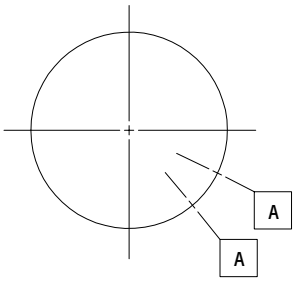

SCHEMATIC REAR VIEW
DIFFUSER CASE

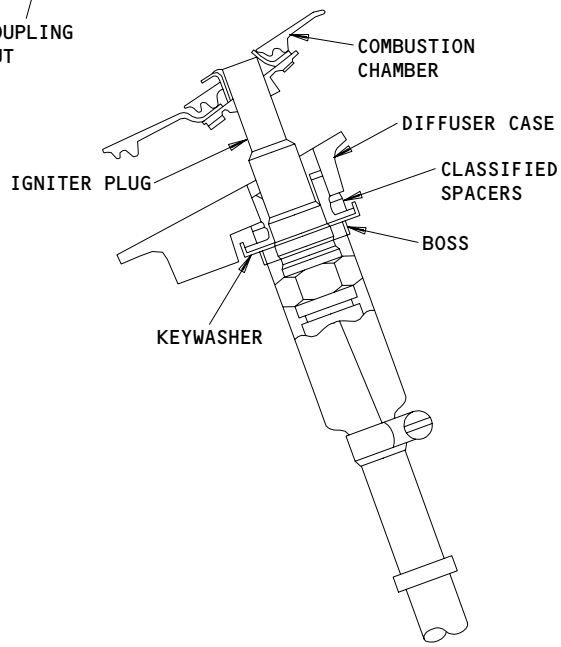

(WITH PLUG INSTALLED)
A-A

L-A0188

Igniter Plug Installation
Figure 401 (Sheet 1)

BOEING PROPRIETARY - Copyright (C) - Unpublished Work - See title page for details.

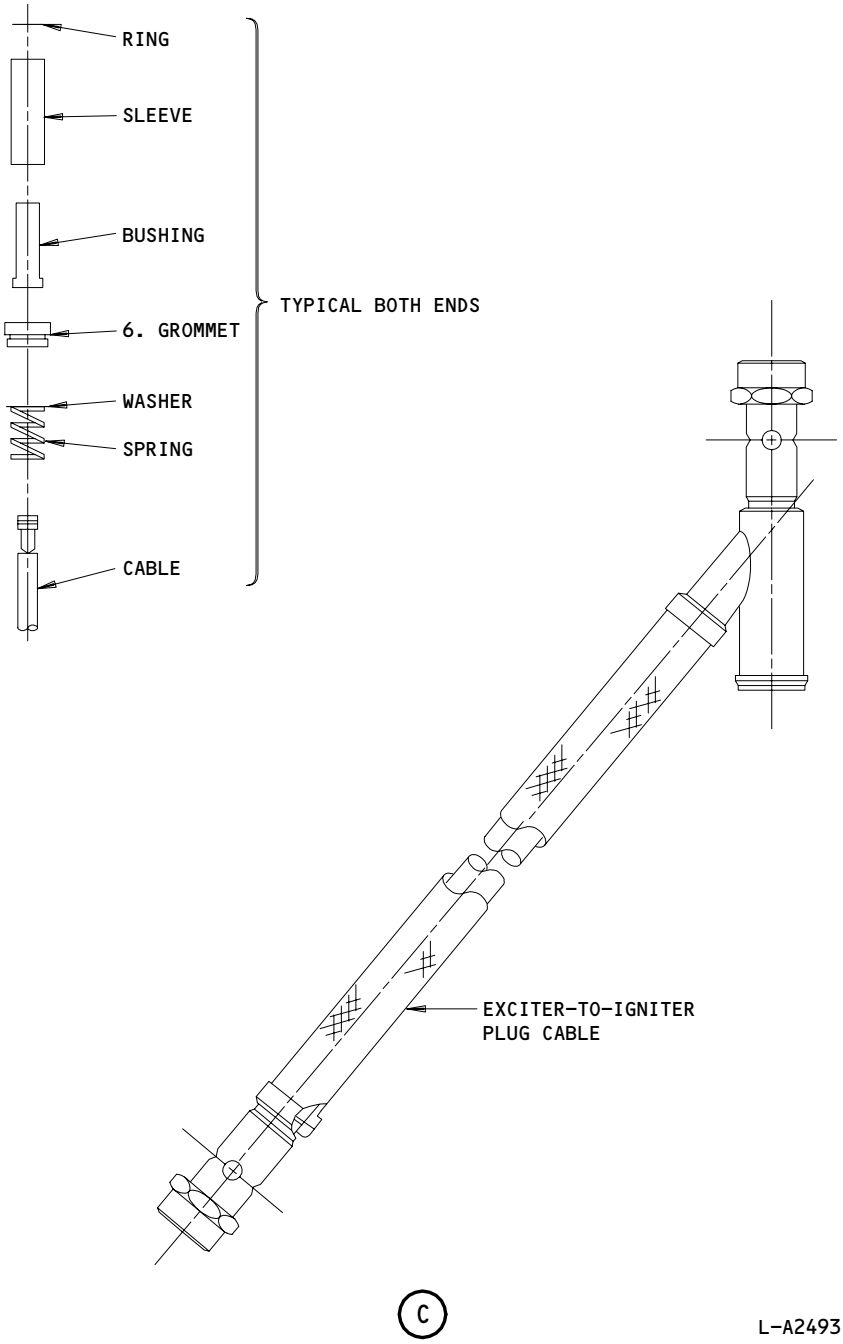

Igniter Plug Installation
Figure 401 (Sheet 2)

BOEING PROPRIETARY - Copyright (C) - Unpublished Work - See title page for details.

STATION		BOEING CARD NO.
TAIL NO.	SAS BOEING 767 TASK CARD	74-401-01-1
DATE		AIRLINE CARD NO.

SKILL	WORK AREA	RELATED TASK	INTERVAL	PHASE	MPD REV	TASK CARD REVISION
ENGIN	ENGINE 1	W-74-405-01-1	01000 HRS	10202	005	DEC 22/07

TASK	TITLE	STRUCTURAL ILLUSTRATION REFERENCE	APPLICABILITY AIRPLANE	APPLICABILITY ENGINE
CHECK/INSP	ENGINE 1 IGNITER PLUGS		ALL	4000

ZONES	ACCESS PANELS
411	417AL 418AR

MECH	INSP	MPD ITEM NUMBER
		N74-21-02-6A

VISUALLY CHECK THE ENGINE 1 IGNITER PLUGS FOR ARCING, FLASHOVER AND TIP DETERIORATION (IF NOT ALTERNATING STARTING SYSTEMS 1 AND 2).

1. <u>Do the Inspection of the Igniter Plug</u>

   A. Equipment

      (1) Tool - Service Wear Measuring, CT-468 or CT-492

         Champion Spark Plug Company
         900 Upton
         Toledo, Ohio 43601 (Recommended)

         Commercially Available (Alternative)

      (2) Die - Thread Chasing, 1.00-20UNEF-2A

         Tapco USA, Inc., 5605 Pike Rd,
         Loves Park, IL 61111 (Recommended)

         Commercially Available (Alternative)

      (3) Die - Thread Chasing, 15/16-16UN-2A

         Tapco USA, Inc., 5605 Pike Rd,
         Loves Park, IL 61111 (Recommended)

         Commercially Available (Alternative)

      (4) Tap - Thread Chasing, PWA 24524

      (5) Tap - Thread Chasing, PWA 27641

   B. References

BOEING PROPRIETARY - Copyright (C) - Unpublished Work - See title page for details.

(1) AMM 71-11-06/201, Core Cowl Panels

(2) AMM 74-21-02/401, Igniter Plug

(3) AMM 74-21-02/701, Igniter Plug

(4) AMM 78-31-00/201, Thrust Reverser System

C. Access

(1) Location Zone

411	Left Engine
421	Right Engine

(2) Access Panels

417AL	Core Cowl (Left), Left Engine
418AR	Core Cowl (Right), Left Engine
427AL	Core Cowl (Left), Right Engine
428AR	Core Cowl (Right), Right Engine

D. Prepare for the Inspection of the Igniter Plug

WARNING: DO THE THRUST REVERSER DEACTIVATION PROCEDURE TO PREVENT THE OPERATION OF THE THRUST REVERSER. ACCIDENTAL OPERATION OF THE THRUST REVERSER CAN CAUSE INJURY TO PERSONS OR DAMAGE TO EQUIPMENT.

(1) Do this procedure: Thrust Reverser Deactivation for Ground Maintenance (AMM 78-31-00/201).

(2) Open the right core cowl panel (AMM 71-11-06/201).

(3) Open this overhead panel P11 circuit breakers and attach a DO-NOT-CLOSE tag:

(a) 11D7, ENGINE STBY IGN 1

(b) 11D8, ENGINE STBY IGN 2

(4) For the left engine, open these overhead panel P11 circuit breakers and attach a DO-NOT-CLOSE tag:

(a) 11M1, L IGN 1

BOEING PROPRIETARY - Copyright (C) - Unpublished Work - See title page for details.

(b) 11M9, LEFT ENGINE BUS PWR SENSE

(c) 11M28, L IGN 2

(5) For the right engine, open these overhead panel P11 circuit breakers and attach a DO-NOT-CLOSE tag:

(a) 11M2, R IGN 1

(b) 11M29, R IGN 2

(c) 11M36, RIGHT ENGINE BUS PWR SENSE

E. Procedure

(1) Do the inspection of the igniter plug (Fig. 601, 602, 603).

(a) Remove the igniter plug (AMM 74-21-02/401).

(b) Examine the cable coupling threads and the shell threads on the igniter plug (Fig. 601)

1) If the coupling threads are damaged, chase the threads with a 1.000-20NS die.

2) If the shell threads are damaged, chase the threads with a 0.9375-16NS die.

<u>CAUTION</u>: MAKE SURE THERE ARE NO CRACKS IN THE CERAMIC OF THE IGNITER PLUG. BROKEN CERAMIC MAY BE INGESTED BY THE TURBINE IF THE PLUG IS VERY BADLY ERODED WHICH CAN CAUSE DAMAGE TO THE ENGINE.

(c) Examine each plug for cracks in the ceramic.

1) Replace the plug if you find any cracks in the ceramic.

2) Shake the plug and listen for loose pieces to find internal breaks or cracks.

(d) Examine the igniter plug for erosion (Fig. 601).

1) Use a lighted magnifying glass to see if the shoulder supporting ceramic is worn through.

BOEING PROPRIETARY - Copyright (C) - Unpublished Work - See title page for details.

2) Wear of Champion igniter plugs may be measured with the service wear measuring tool.

(e) Examine the igniter plugs for abrasion in the lower shell area (Fig. 601).

1) Replace the igniter plugs if it is worn more than 0.030 inch (0.762 mm) depth (AMM 74-21-02/401).

NOTE: Igniter plug erosion is proportional to total firing time. Although the igniters will continue to fire after the erosion becomes more than the limits, the voltage necessary to fire the igniter plug increases to a level that can put stress on other ignition components, specially the high tension cable.

(f) If you remove the high tension cable from the igniter plug, examine the well of the igniter plug (Fig. 602, 603).

1) Examine the well of the igniter plug for evidence of arcing or flashover. The igniter plug must be replaced if these conditions are shown (AMM 74-21-02/401).

a) Arcing may be identified by pitting or discoloration of the contact button (Fig. 602). Minor arcing of the contact button can be cleaned (AMM 74-21-02/701).

b) Flashover is identified by carbon tracking (Fig. 603).

2) Examine the well of the igniter plug for presence of oil, dirt and conductive contaminants.

a) Remove the contamination (AMM 74-21-02/701).

(g) If there were problems with the ignition system, do one of the steps that follow to make sure the igniter guide is there:

1) Remove the other igniter plug to compare each inner diameter of the opening in the combustion chamber where the igniter plug is installed.

a) If the diameters are not the same, the igniter guide is gone.

2) Measure the inner diameter of the opening in the combustion chamber where the igniter plug is installed.

BOEING PROPRIETARY - Copyright (C) - Unpublished Work - See title page for details.

a) If the inner diameter is too large, the igniter guide is gone.

NOTE: The diameter of the igniter guide is 0.566-0.576 inch (14.38-14.63 mm), and the inner diameter of the opening without the igniter guide is 0.890-0.920 inch (22.61-23.37 mm).

(h) If the igniter guide is gone, do a borescope inspection of the 1st-stage HPT blades (AMM 72-00-00/601).

1) If the 1st-stage HPT blades are satisfactory, replace the igniter boss with an igniter boss and guide assembly (AMM 74-21-02/801).

NOTE: See your local Pratt & Whitney representative to get the igniter boss and guide assembly.

2) If the HPT Blades are not satisfactory, replace the engine (AMM 71-00-02/401).

(i) Install the igniter plug (AMM 74-21-02/401).

NOTE: If the boss and spacers were not removed, then it is not necessary to measure the immersion depth.

F. Return the Aircraft to Its Usual Condition.

(1) Remove the DO-NOT-CLOSE tag and close these overhead panel P11 circuit breakers:

(a) 11D7, ENGINE STBY IGN 1

(b) 11D8, ENGINE STBY IGN 2

(2) For the left engine, remove the DO-NOT-CLOSE tag and close these overhead panel P11 circuit breakers:

(a) 11M1, L IGN 1

(b) 11M9, LEFT ENGINE BUS PWR SENSE

(c) 11M28, L IGN 2

BOEING PROPRIETARY - Copyright (C) - Unpublished Work - See title page for details.

MECH	INSP

(3) For the right engine, remove the DO-NOT-CLOSE tag and close these overhead panel P11 circuit breakers:

(a) 11M2, R IGN 1

(b) 11M29, R IGN 2

(c) 11M36, RIGHT ENGINE BUS PWR SENSE

(4) Close the right core cowl panel (AMM 71-11-06/201).

(5) Do the activation procedure of the thrust reverser (AMM 78-31-00/201).

BOEING PROPRIETARY - Copyright (C) - Unpublished Work - See title page for details.

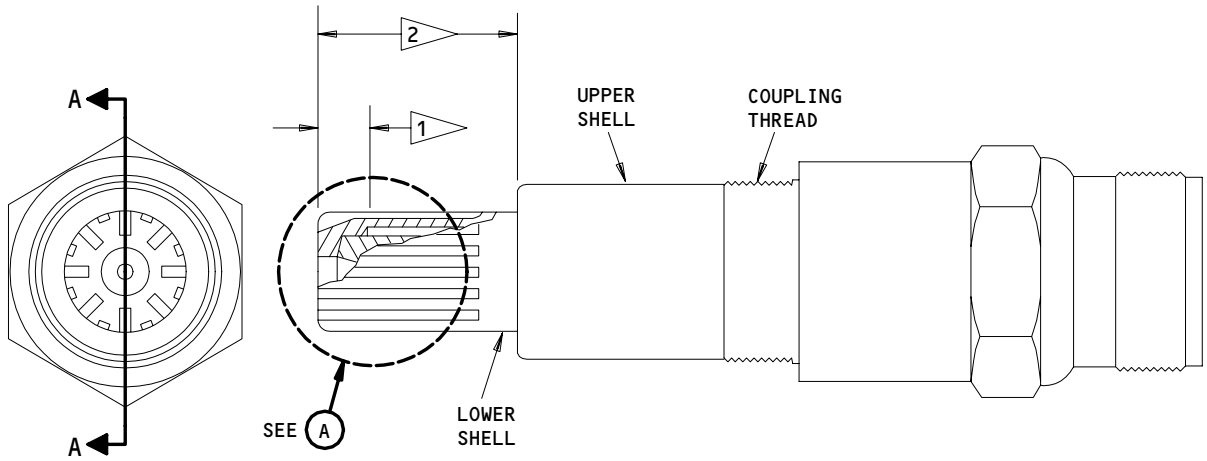

ABRASION LIMITS
A-A

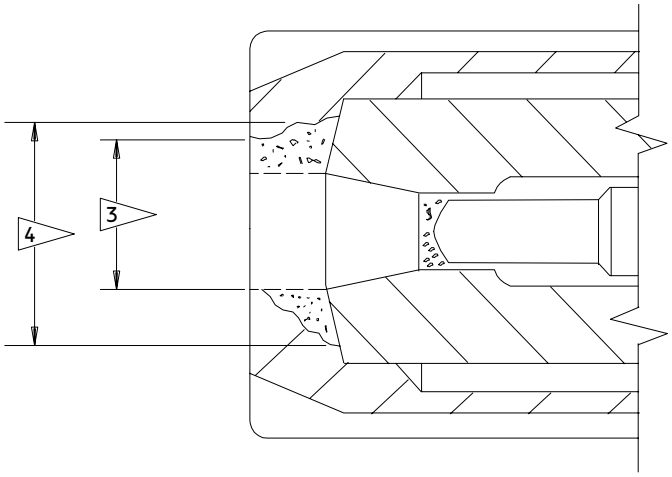

EROSION LIMITS
A

ERODED AREA

1 PIECE THAT MIGHT BREAK OFF NOT PERMITTED
2 0.030 INCH (0.762 mm) MAXIMUM ABRASION IN THIS AREA
3 0.300 INCH (7.6 mm) DIAMETER MAXIMUM SHELL EROSION
4 0.340 INCH (8.6 mm) DIAMETER MAXIUM UNDERCUT EROSION

L-86364

Abrasion and Erosion Limits for Igniter Plugs
Figure 601

BOEING PROPRIETARY - Copyright (C) - Unpublished Work - See title page for details.

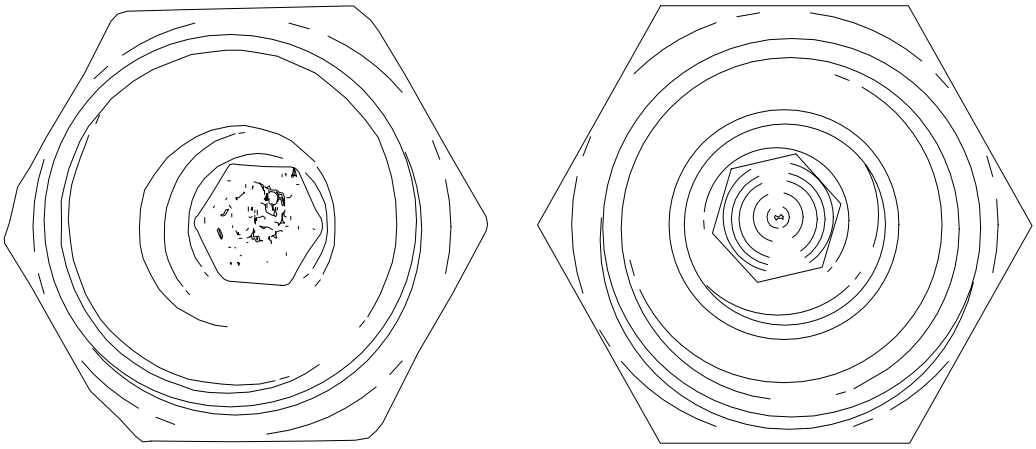

ARCING ON CONTACT BUTTON

NO ARCING ON CONTACT BUTTON
(NEW IGNITER)

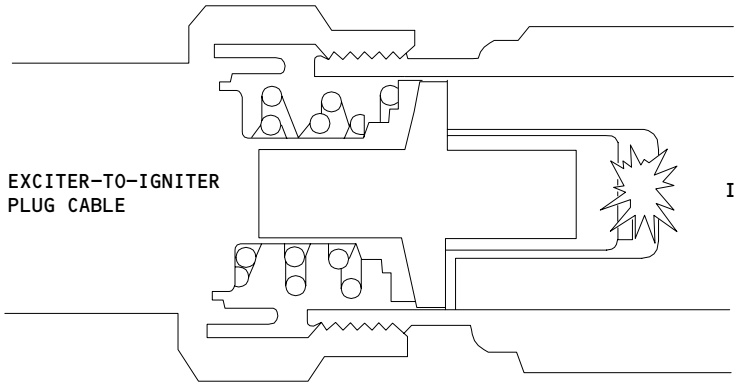

L-70764

Arcing on Contact Button
Figure 602

BOEING PROPRIETARY - Copyright (C) - Unpublished Work - See title page for details.

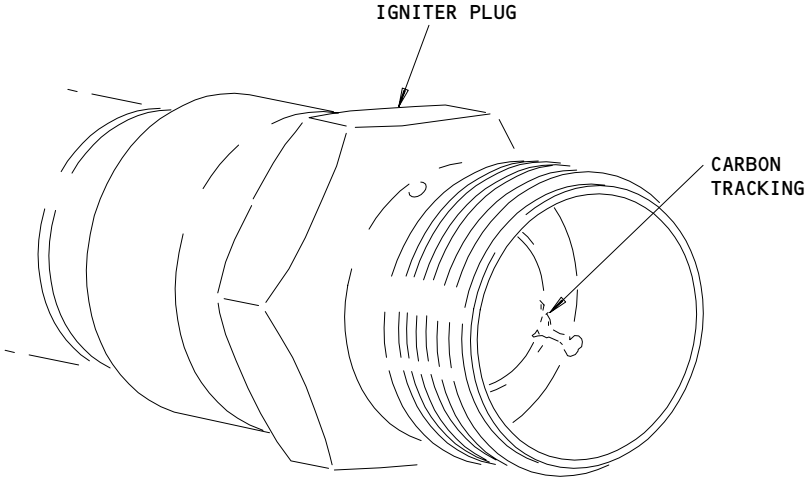

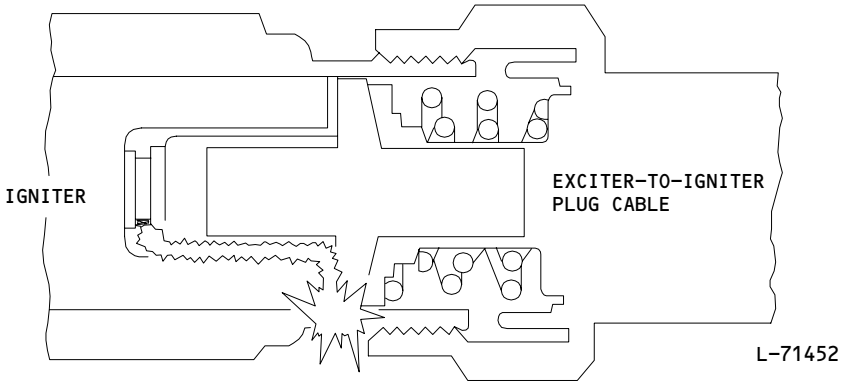

Flashover on Ceramic Insulator
Figure 603

BOEING PROPRIETARY - Copyright (C) - Unpublished Work - See title page for details.

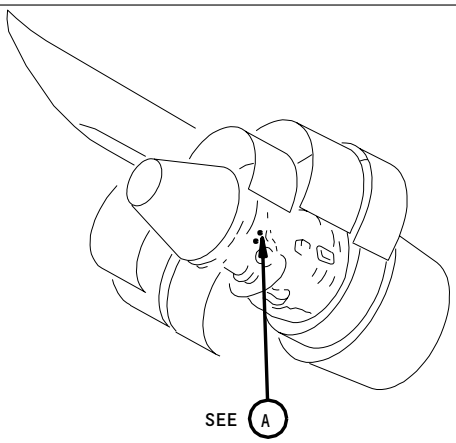

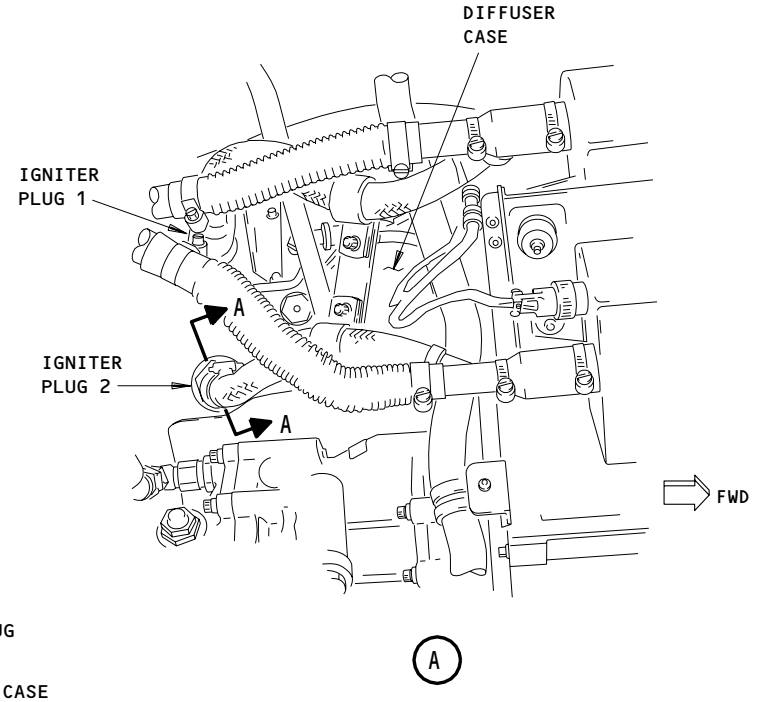

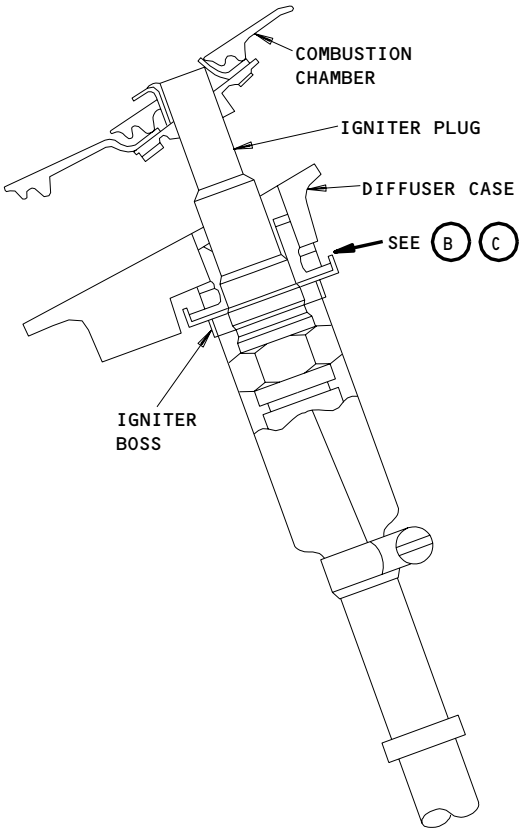

PLUG INSTALLED
A-A

L-A0188

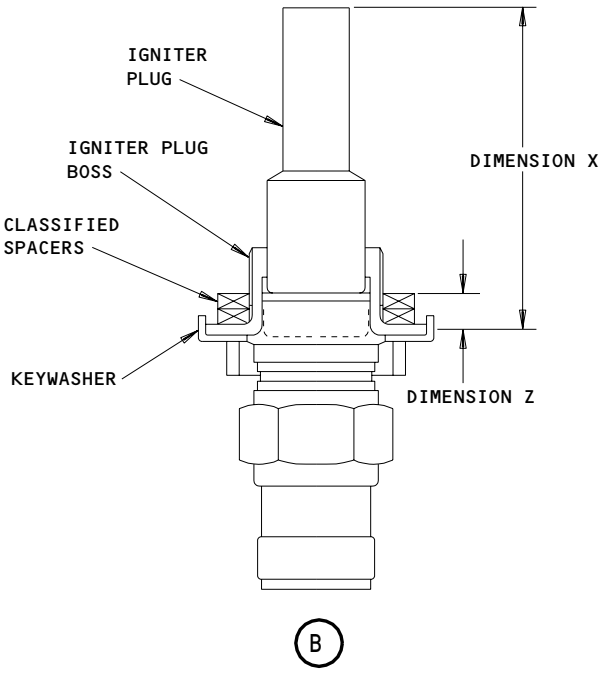

Immersion Depth Check
Figure 604 (Sheet 1)

BOEING PROPRIETARY - Copyright (C) - Unpublished Work - See title page for details.

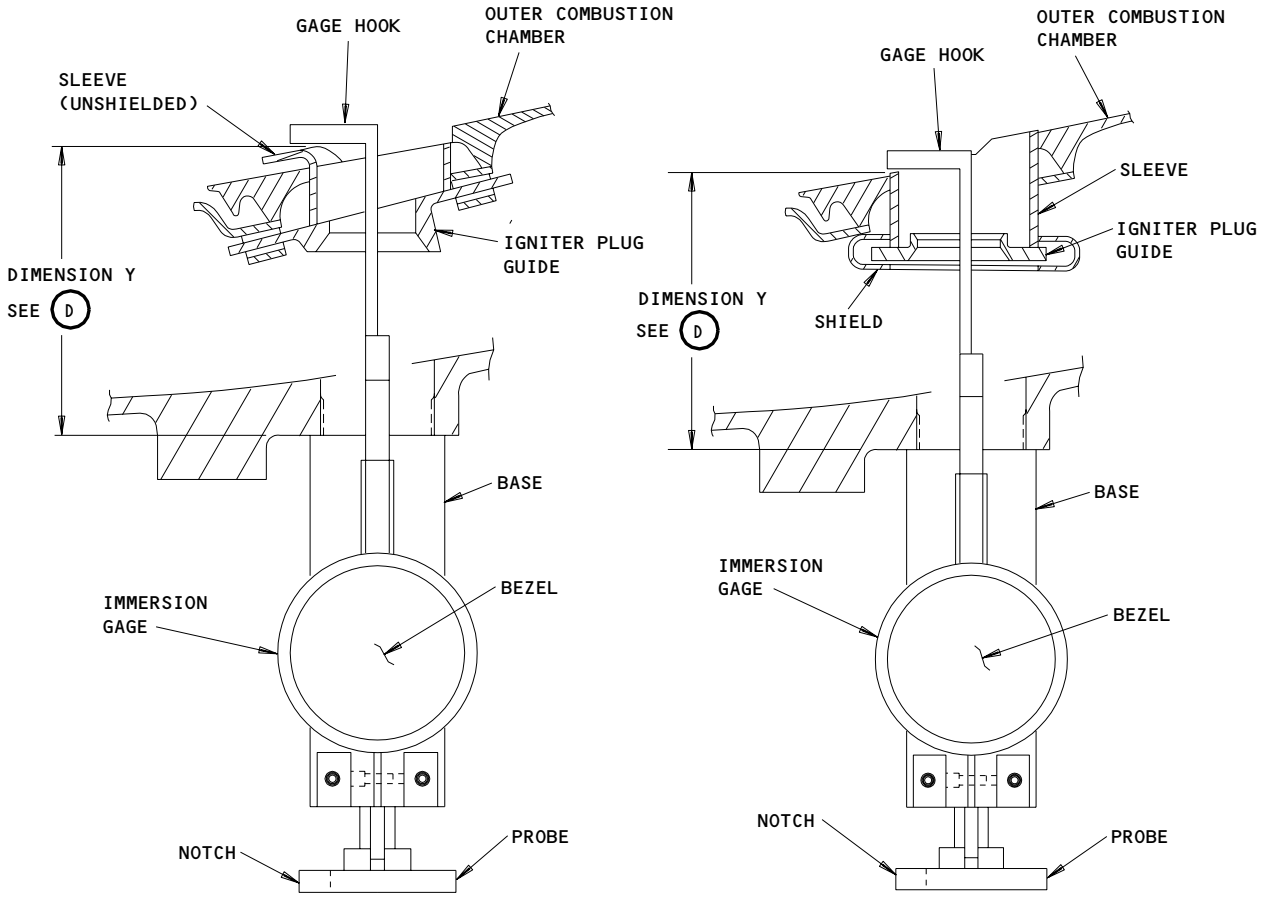

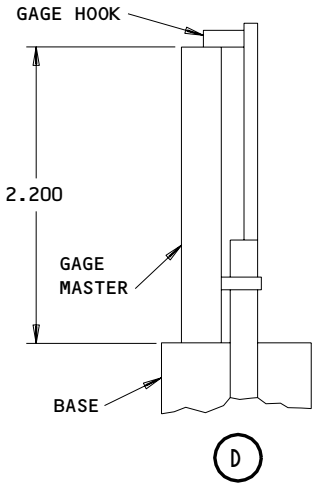

Immersion Depth Check
Figure 604 (Sheet 2)

BOEING PROPRIETARY - Copyright (C) - Unpublished Work - See title page for details.

SPECIFIED SPACER THICKNESS		CLASSIFIED SPACER (PART NO.)
INCHES	MILLIMETERS	
0.008-0.018	0.20-0.46	741073CL1
0.019-0.028	0.47-0.71	741073CL2
0.029-0.038	0.72-0.97	741073CL3
0.039-0.048	0.98-1.22	741073CL4
0.049-0.058	1.23-1.47	741073CL5
0.059-0.068	1.48-1.73	741073CL6
0.069-0.078	1.74-1.98	741073CL7
0.079-0.088	1.99-2.24	741073CL8
0.089-0.098	2.25-2.49	741073CL9
0.099-0.108	2.50-2.74	741073CL10
0.109-0.118	2.75-3.00	741073CL11
0.119-0.128	3.01-3.25	741073CL12
0.129-0.138	3.26-3.51	741073CL13
0.139-0.148	3.52-3.76	741073CL14
0.149-0.158	3.77-4.01	741073CL15
0.159-0.168	4.02-4.27	741073CL16
0.169-0.178	4.28-4.52	741073CL17
0.179-0.188	4.53-4.78	741073CL18

Immersion Depth Check
Figure 604 (Sheet 3)

BOEING PROPRIETARY - Copyright (C) - Unpublished Work - See title page for details.

STATION		BOEING CARD NO.
TAIL NO.	SAS BOEING 767 TASK CARD	74-401-01-2
DATE		AIRLINE CARD NO.

SKILL	WORK AREA	RELATED TASK	INTERVAL	PHASE	MPD REV	TASK CARD REVISION
ENGIN	ENGINE 2	W-74-405-01-2	01000 HRS	10202	005	DEC 22/07

TASK	TITLE	STRUCTURAL ILLUSTRATION REFERENCE	APPLICABILITY AIRPLANE	APPLICABILITY ENGINE
CHECK/INSP	ENGINE 2 IGNITER PLUGS		ALL	4000

ZONES	ACCESS PANELS
421	427AL 428AR

MECH	INSP	MPD ITEM NUMBER
		N74-21-02-6A

VISUALLY CHECK THE ENGINE 2 IGNITER PLUGS FOR ARCING, FLASHOVER, AND TIP DETERIORATION (IF NOT ALTERNATING STARTING SYSTEMS 1 AND 2).

1. <u>Do the Inspection of the Igniter Plug</u>

A. Equipment

(1) Tool - Service Wear Measuring, CT-468 or CT-492

Champion Spark Plug Company
900 Upton
Toledo, Ohio 43601 (Recommended)

Commercially Available (Alternative)

(2) Die - Thread Chasing, 1.00-20UNEF-2A

Tapco USA, Inc., 5605 Pike Rd,
Loves Park, IL 61111 (Recommended)

Commercially Available (Alternative)

(3) Die - Thread Chasing, 15/16-16UN-2A

Tapco USA, Inc., 5605 Pike Rd,
Loves Park, IL 61111 (Recommended)

Commercially Available (Alternative)

(4) Tap - Thread Chasing, PWA 24524

(5) Tap - Thread Chasing, PWA 27641

B. References

BOEING PROPRIETARY - Copyright (C) - Unpublished Work - See title page for details.

(1) AMM 71-11-06/201, Core Cowl Panels

(2) AMM 74-21-02/401, Igniter Plug

(3) AMM 74-21-02/701, Igniter Plug

(4) AMM 78-31-00/201, Thrust Reverser System

C. Access

(1) Location Zone

411	Left Engine
421	Right Engine

(2) Access Panels

417AL	Core Cowl (Left), Left Engine
418AR	Core Cowl (Right), Left Engine
427AL	Core Cowl (Left), Right Engine
428AR	Core Cowl (Right), Right Engine

D. Prepare for the Inspection of the Igniter Plug

WARNING: DO THE THRUST REVERSER DEACTIVATION PROCEDURE TO PREVENT THE OPERATION OF THE THRUST REVERSER. ACCIDENTAL OPERATION OF THE THRUST REVERSER CAN CAUSE INJURY TO PERSONS OR DAMAGE TO EQUIPMENT.

(1) Do this procedure: Thrust Reverser Deactivation for Ground Maintenance (AMM 78-31-00/201).

(2) Open the right core cowl panel (AMM 71-11-06/201).

(3) Open this overhead panel P11 circuit breakers and attach a DO-NOT-CLOSE tag:

(a) 11D7, ENGINE STBY IGN 1

(b) 11D8, ENGINE STBY IGN 2

(4) For the left engine, open these overhead panel P11 circuit breakers and attach a DO-NOT-CLOSE tag:

(a) 11M1, L IGN 1

BOEING PROPRIETARY - Copyright (C) - Unpublished Work - See title page for details.

(b) 11M9, LEFT ENGINE BUS PWR SENSE

(c) 11M28, L IGN 2

(5) For the right engine, open these overhead panel P11 circuit breakers and attach a DO-NOT-CLOSE tag:

(a) 11M2, R IGN 1

(b) 11M29, R IGN 2

(c) 11M36, RIGHT ENGINE BUS PWR SENSE

E. Procedure

(1) Do the inspection of the igniter plug (Fig. 601, 602, 603).

(a) Remove the igniter plug (AMM 74-21-02/401).

(b) Examine the cable coupling threads and the shell threads on the igniter plug (Fig. 601)

1) If the coupling threads are damaged, chase the threads with a 1.000-20NS die.

2) If the shell threads are damaged, chase the threads with a 0.9375-16NS die.

<u>CAUTION</u>: MAKE SURE THERE ARE NO CRACKS IN THE CERAMIC OF THE IGNITER PLUG. BROKEN CERAMIC MAY BE INGESTED BY THE TURBINE IF THE PLUG IS VERY BADLY ERODED WHICH CAN CAUSE DAMAGE TO THE ENGINE.

(c) Examine each plug for cracks in the ceramic.

1) Replace the plug if you find any cracks in the ceramic.

2) Shake the plug and listen for loose pieces to find internal breaks or cracks.

(d) Examine the igniter plug for erosion (Fig. 601).

1) Use a lighted magnifying glass to see if the shoulder supporting ceramic is worn through.

BOEING PROPRIETARY - Copyright (C) - Unpublished Work - See title page for details.

2) Wear of Champion igniter plugs may be measured with the service wear measuring tool.

(e) Examine the igniter plugs for abrasion in the lower shell area (Fig. 601).

1) Replace the igniter plugs if it is worn more than 0.030 inch (0.762 mm) depth (AMM 74-21-02/401).

NOTE: Igniter plug erosion is proportional to total firing time. Although the igniters will continue to fire after the erosion becomes more than the limits, the voltage necessary to fire the igniter plug increases to a level that can put stress on other ignition components, specially the high tension cable.

(f) If you remove the high tension cable from the igniter plug, examine the well of the igniter plug (Fig. 602, 603).

1) Examine the well of the igniter plug for evidence of arcing or flashover. The igniter plug must be replaced if these conditions are shown (AMM 74-21-02/401).

a) Arcing may be identified by pitting or discoloration of the contact button (Fig. 602). Minor arcing of the contact button can be cleaned (AMM 74-21-02/701).

b) Flashover is identified by carbon tracking (Fig. 603).

2) Examine the well of the igniter plug for presence of oil, dirt and conductive contaminants.

a) Remove the contamination (AMM 74-21-02/701).

(g) If there were problems with the ignition system, do one of the steps that follow to make sure the igniter guide is there:

1) Remove the other igniter plug to compare each inner diameter of the opening in the combustion chamber where the igniter plug is installed.

a) If the diameters are not the same, the igniter guide is gone.

2) Measure the inner diameter of the opening in the combustion chamber where the igniter plug is installed.

BOEING PROPRIETARY - Copyright (C) - Unpublished Work - See title page for details.

a) If the inner diameter is too large, the igniter guide is gone.

NOTE: The diameter of the igniter guide is 0.566-0.576 inch (14.38-14.63 mm), and the inner diameter of the opening without the igniter guide is 0.890-0.920 inch (22.61-23.37 mm).

(h) If the igniter guide is gone, do a borescope inspection of the 1st-stage HPT blades (AMM 72-00-00/601).

1) If the 1st-stage HPT blades are satisfactory, replace the igniter boss with an igniter boss and guide assembly (AMM 74-21-02/801).

NOTE: See your local Pratt & Whitney representative to get the igniter boss and guide assembly.

2) If the HPT Blades are not satisfactory, replace the engine (AMM 71-00-02/401).

(i) Install the igniter plug (AMM 74-21-02/401).

NOTE: If the boss and spacers were not removed, then it is not necessary to measure the immersion depth.

F. Return the Aircraft to Its Usual Condition.

(1) Remove the DO-NOT-CLOSE tag and close these overhead panel P11 circuit breakers:

(a) 11D7, ENGINE STBY IGN 1

(b) 11D8, ENGINE STBY IGN 2

(2) For the left engine, remove the DO-NOT-CLOSE tag and close these overhead panel P11 circuit breakers:

(a) 11M1, L IGN 1

(b) 11M9, LEFT ENGINE BUS PWR SENSE

(c) 11M28, L IGN 2

BOEING PROPRIETARY - Copyright (C) - Unpublished Work - See title page for details.

MECH	INSP

(3) For the right engine, remove the DO-NOT-CLOSE tag and close these overhead panel P11 circuit breakers:

(a) 11M2, R IGN 1

(b) 11M29, R IGN 2

(c) 11M36, RIGHT ENGINE BUS PWR SENSE

(4) Close the right core cowl panel (AMM 71-11-06/201).

(5) Do the activation procedure of the thrust reverser (AMM 78-31-00/201).

BOEING PROPRIETARY - Copyright (C) - Unpublished Work - See title page for details.

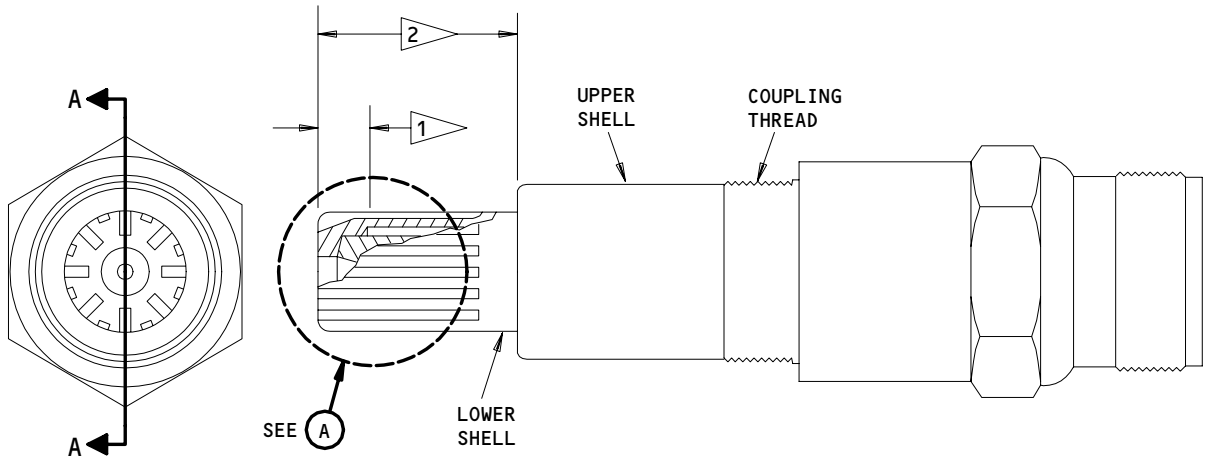

ABRASION LIMITS
A-A

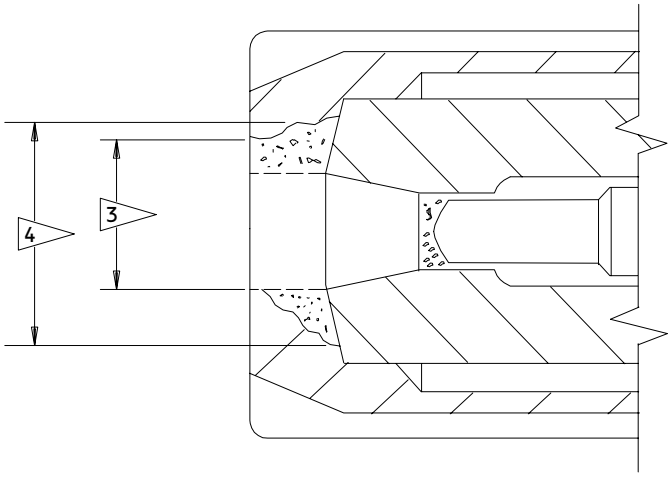

EROSION LIMITS
A

ERODED AREA

1 PIECE THAT MIGHT BREAK OFF NOT PERMITTED
2 0.030 INCH (0.762 mm) MAXIMUM ABRASION IN THIS AREA
3 0.300 INCH (7.6 mm) DIAMETER MAXIMUM SHELL EROSION
4 0.340 INCH (8.6 mm) DIAMETER MAXIUM UNDERCUT EROSION

L-86364

Abrasion and Erosion Limits for Igniter Plugs
Figure 601

BOEING PROPRIETARY - Copyright (C) - Unpublished Work - See title page for details.

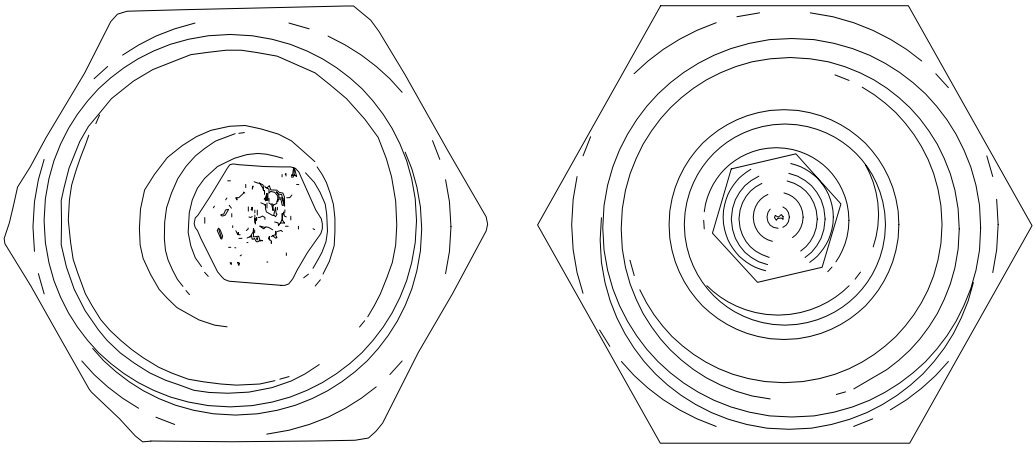

ARCING ON CONTACT BUTTON

NO ARCING ON CONTACT BUTTON
(NEW IGNITER)

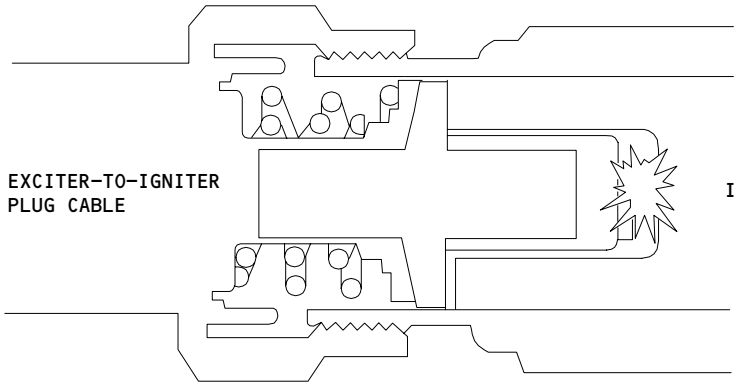

L-70764

Arcing on Contact Button
Figure 602

BOEING PROPRIETARY - Copyright (C) - Unpublished Work - See title page for details.

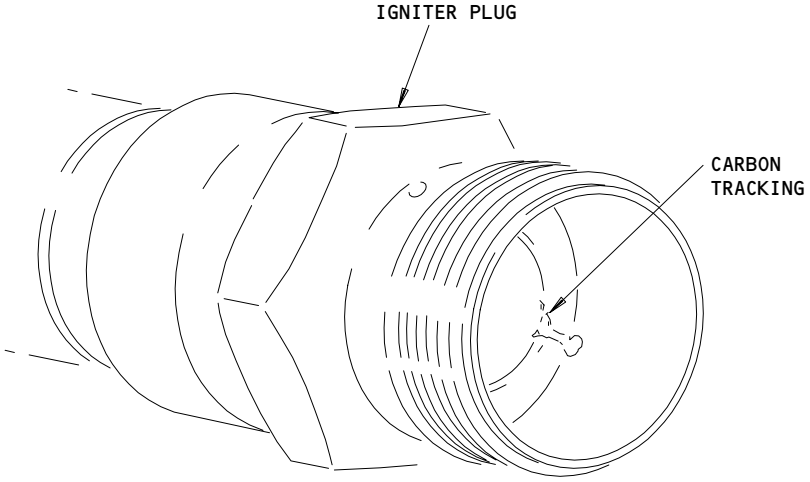

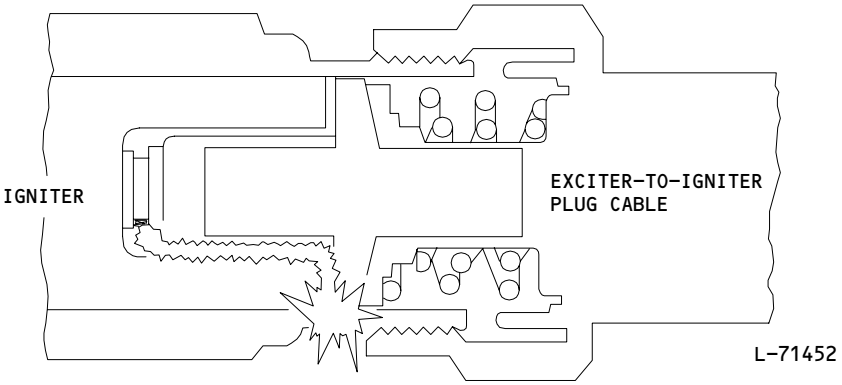

Flashover on Ceramic Insulator
Figure 603

BOEING PROPRIETARY - Copyright (C) - Unpublished Work - See title page for details.

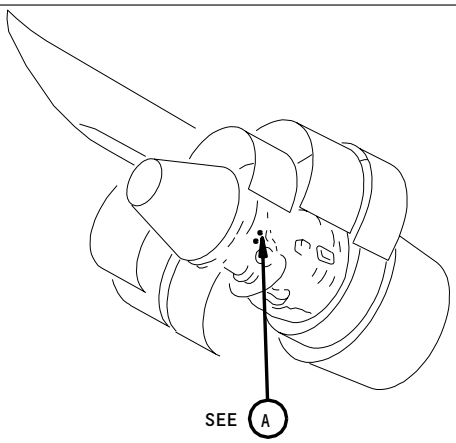

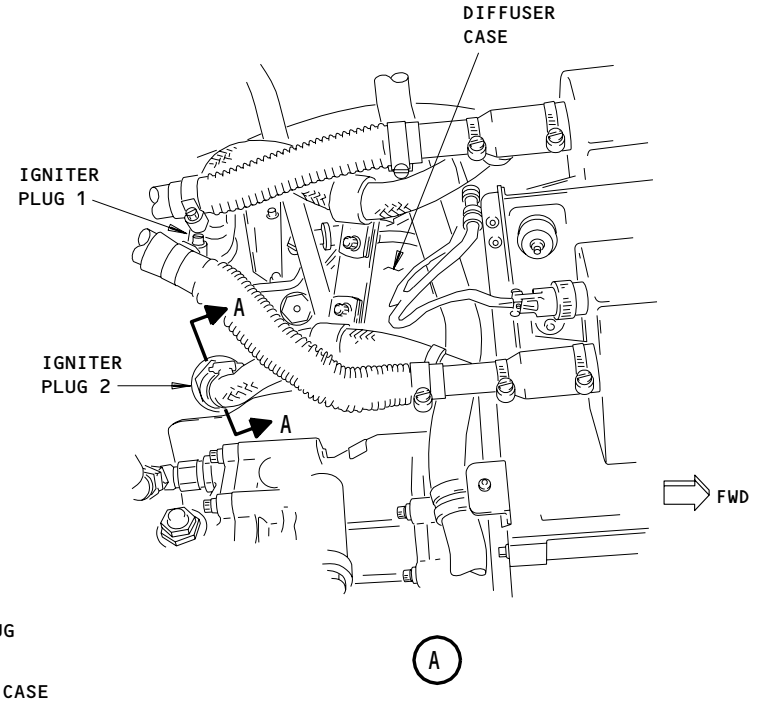

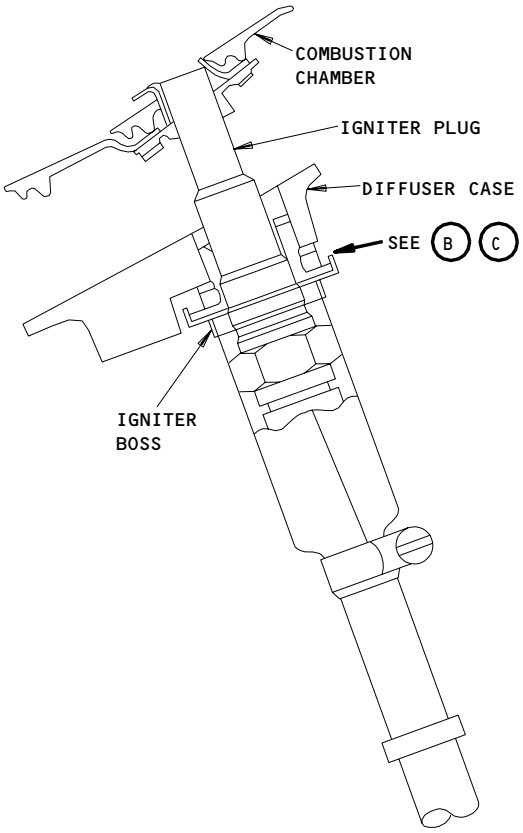

PLUG INSTALLED
A-A

L-A0188

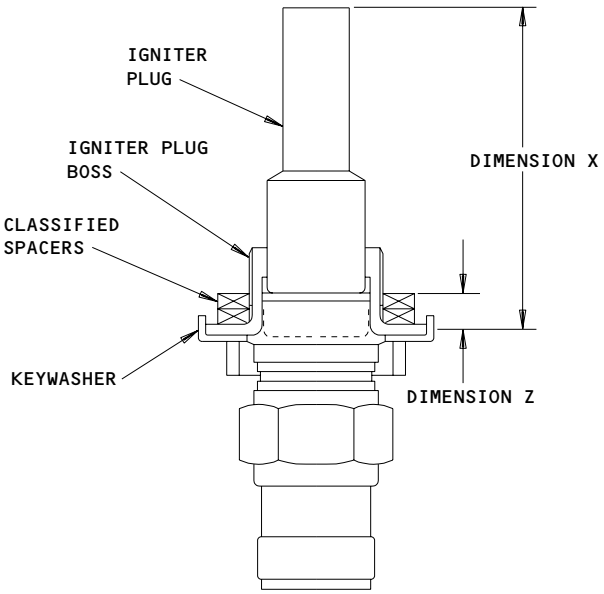

Immersion Depth Check
Figure 604 (Sheet 1)

BOEING PROPRIETARY - Copyright (C) - Unpublished Work - See title page for details.

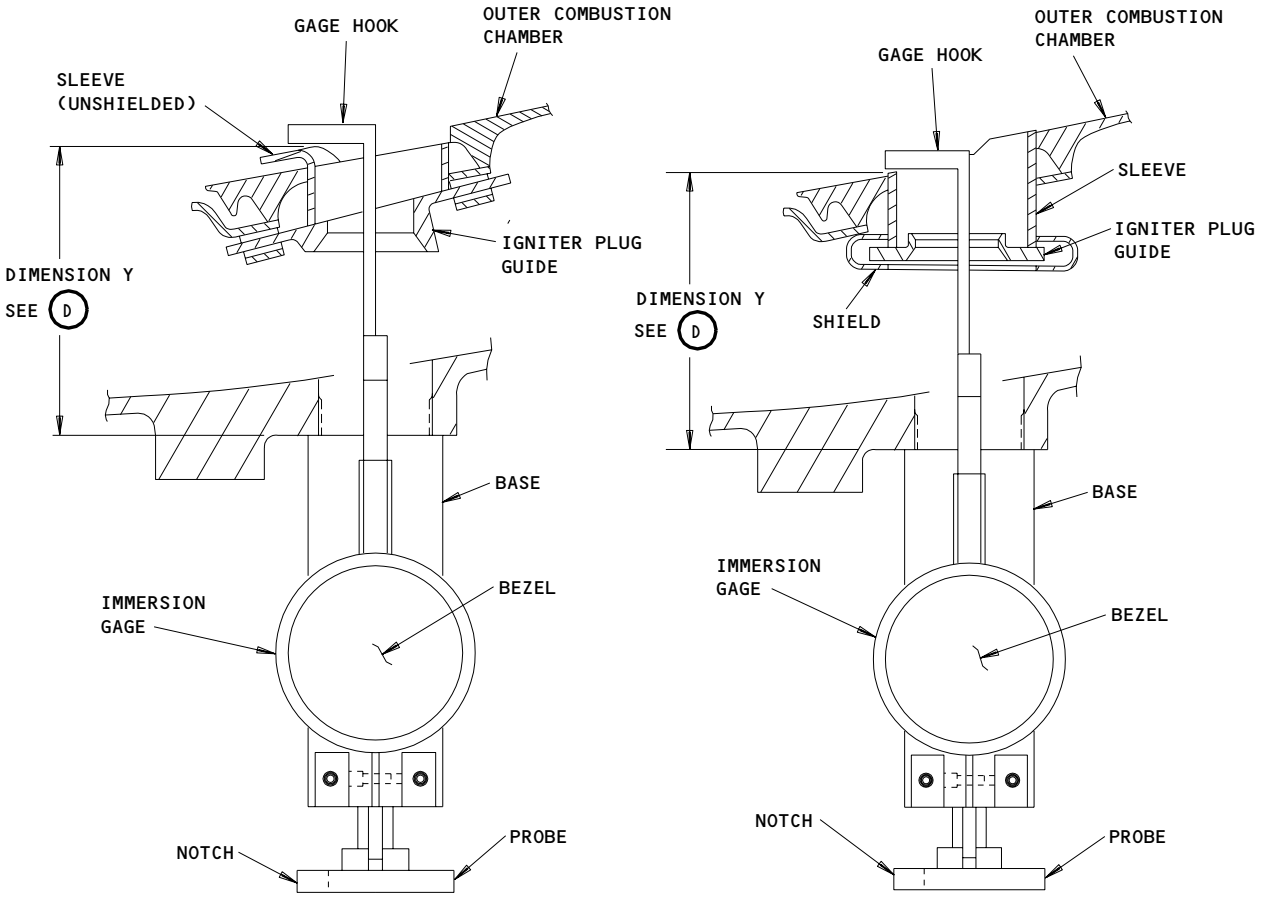

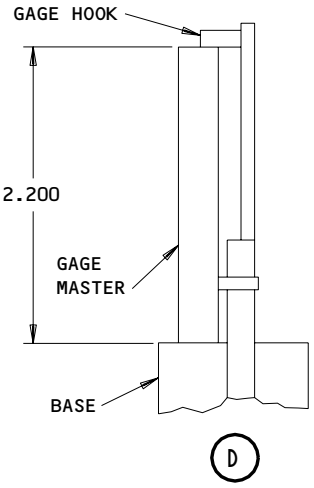

Immersion Depth Check
Figure 604 (Sheet 2)

BOEING PROPRIETARY - Copyright (C) - Unpublished Work - See title page for details.

SPECIFIED SPACER THICKNESS		CLASSIFIED SPACER (PART NO.)
INCHES	MILLIMETERS	
0.008-0.018	0.20-0.46	741073CL1
0.019-0.028	0.47-0.71	741073CL2
0.029-0.038	0.72-0.97	741073CL3
0.039-0.048	0.98-1.22	741073CL4
0.049-0.058	1.23-1.47	741073CL5
0.059-0.068	1.48-1.73	741073CL6
0.069-0.078	1.74-1.98	741073CL7
0.079-0.088	1.99-2.24	741073CL8
0.089-0.098	2.25-2.49	741073CL9
0.099-0.108	2.50-2.74	741073CL10
0.109-0.118	2.75-3.00	741073CL11
0.119-0.128	3.01-3.25	741073CL12
0.129-0.138	3.26-3.51	741073CL13
0.139-0.148	3.52-3.76	741073CL14
0.149-0.158	3.77-4.01	741073CL15
0.159-0.168	4.02-4.27	741073CL16
0.169-0.178	4.28-4.52	741073CL17
0.179-0.188	4.53-4.78	741073CL18

Immersion Depth Check
Figure 604 (Sheet 3)

BOEING PROPRIETARY - Copyright (C) - Unpublished Work - See title page for details.

SKILL	WORK AREA	RELATED TASK	INTERVAL	PHASE	MPD REV	TASK CARD REVISION
ENGIN	ENGINE 1	W-74-406-01-1	01000 HRS	10202	006	APR 22/08

TASK	TITLE	STRUCTURAL ILLUSTRATION REFERENCE	APPLICABILITY AIRPLANE	APPLICABILITY ENGINE
OPERATIONAL	ENGINE 1 IGNITION SYSTEM		ALL	4000

ZONES	ACCESS PANELS
211 411	

MECH	INSP	MPD ITEM NUMBER

OPERATIONALLY CHECK (AUDIBLE CHECK) THE ENGINE 1 IGNITION SYSTEMS 1 AND 2 INDEPENDENTLY (IF NOT ALTERNATING STARTING SYSTEMS 1 AND 2). N74-00-00-5A

1. Audible Test of the Engine Ignition System

A. General

(1) The high energy spark supplied by the ignition system is easily heard. This procedure is an audible test of the applicable engine ignition system. If you can hear a spark then the airplane system, ignition exciters and high tension cables are in satisfactory condition. This does not tell you about the condition of the igniter plug. If the igniter ceramic is cracked, the igniter plug can spark through the cooling holes instead of at the tip.

B. References

(1) AMM 24-22-00/201, Electrical Power-Control

(2) AMM 71-00-00/201, Power Plant

C. Prepare for the Audible Test of the Ignition System

CAUTION: BEFORE YOU TEST THE IGNITION SYSTEM, DRY MOTOR THE ENGINE TO REMOVE ANY UNBURNED FUEL (AMM 71-00-00/201). UNBURNED FUEL MAY RESULT IN AN INTERNAL ENGINE FIRE OR TURBINE EXHAUST AREA FIRE. MAKE SURE N2 DOES NOT TURN WHEN YOU TEST THE IGNITION SYSTEM. IF N2 TURNS, FUEL CAN ENTER THE COMBUSTION CHAMBER WHEN THE FUEL CONTROL SWITCH IS PUT TO THE RUN POSITION. AN ACCIDENTAL ENGINE LIGHTUP COULD OCCUR.

BOEING PROPRIETARY - Copyright (C) - Unpublished Work - See title page for details.

MECH	INSP

(1) Dry motor the engine to clear the gas path of any remaining fuel (AMM 71-00-00/201).

NOTE: If you dry motored the engine immediately before and you know that there is no fuel in the engine, it is not necessary to dry motor the engine again.

(2) Do these steps to set the engine controls for the audible test of the engine ignition system:

(a) Supply electrical power (AMM 24-22-00/201).

(b) Make sure the fuel control switch is in the RUN position.

(c) Make sure the engine start switch is in the OFF position.

(d) Make sure the engine start VALVE light is not on.

(e) Make sure the ENG VALVE light is on.

(f) Open these overhead panel P11 circuit breakers and attach a DO-NOT-CLOSE tag:

1) 11D7, STANDBY IGNITION 1

2) 11D8, STANDBY IGNITION 2

CAUTION: IF YOU DO NOT OPEN THE START CONT CIRCUIT BREAKER OR THE THE FUEL CONTROL VLV CIRCUIT BREAKER IT WILL CAUSE THE ENGINE TO MOTOR WHEN THE ENGINE START SWITCH IS PUT TO THE GND POSITION. THIS WILL OCCUR IF THE AIRPLANE PNEUMATIC SYSTEM IS PRESSURIZED.

(g) For the left engine, open these overhead panel P11 circuit breakers and attach a DO-NOT-CLOSE tag:

1) 11D19, ENGINE START CONT LEFT

2) 11D25, ENGINE FUEL CONT VLV & EEC CHAN B RST L

(h) For the right engine, open these overhead panel P11 circuit breakers and attach a DO-NOT-CLOSE tag:

1) 11D20, ENGINE START CONT RIGHT

BOEING PROPRIETARY - Copyright (C) - Unpublished Work - See title page for details.

2) 11D26, ENGINE FUEL CONT VLV & EEC CHAN B RST R

(i) For the left engine, make sure these overhead panel P11 circuit breakers are closed:

1) 11M1, L IGN 1

2) 11M9, LEFT ENG BUS POWER SENSE

3) 11M28, L IGN 2

(j) For the right engine, make sure these overhead panel P11 circuit breakers are closed:

1) 11M2, R IGN 1

2) 11M29, R IGN 2

3) 11M36, RIGHT ENG BUS POWER SENSE

WARNING: DO THE THRUST REVERSER DEACTIVATION PROCEDURE TO PREVENT THE OPERATION OF THE THRUST REVERSER. ACCIDENTAL OPERATION OF THE THRUST REVERSER CAN CAUSE INJURY TO PERSONS OR DAMAGE TO EQUIPMENT.

(3) Do this procedure: Thrust Reverser Deactivation for Ground Maintenance (AMM 78-31-00/201).

D. Procedure

WARNING: YOU MUST BE VERY CAREFUL WHEN YOU WORK ON THE IGNITION SYSTEM. IGNITION VOLTAGE IS VERY DANGEROUS. DO NOT TOUCH THE IGNITER PLUGS, THE ENERGIZED PART OF THE IGNITION EXCITER, OR THE IGNITION WIRES WHEN THE IGNITION SYSTEM IS ENERGIZED. IF YOU DO NOT OBEY THIS INSTRUCTION, INJURIES TO PERSONS AND DAMAGE TO EQUIPMENT CAN OCCUR.

WARNING: DO NOT DO THE CHECK OF THE IGNITION SYSTEM IF THE AIRPLANE IS NOT IN A SAFE CONDITION AND A SAFE LOCATION. IF YOU DO NOT OBEY THIS INSTRUCTION, INJURIES TO PERSONS OR DAMAGE TO THE AIRPLANE OR EQUIPMENT CAN OCCUR.

BOEING PROPRIETARY - Copyright (C) - Unpublished Work - See title page for details.

MECH	INSP

(1) Do these steps to make sure the airplane is in a safe condition and a safe location to do the check:

(a) Make sure the airplane is not being fueled.

(b) Make sure the airplane is not in the hangar.

(c) Make sure there are no buildings, airplanes, equipment or persons in the jet-wake hazard area for the applicable engine(s) that will operate at ground idle (AMM 71-00-00/201).

(2) Do the audible test of the engine ignition system.

(a) Do these steps with the ignition select switch positioned to 1, then repeat the steps with the ignition select switch positioned to 2.

CAUTION: MAKE SURE N2 DOES NOT TURN WHEN WHEN YOU DO THE IGNITION SYSTEM TEST. IF N2 TURNS, FUEL CAN ENTER THE COMBUSTION CHAMBER WHEN THE FUEL CONTROL SWITCH IS PUT TO THE RUN POSITION. ACCIDENTAL ENGINE LIGHTUP CAN OCCUR.

1) Turn and hold the engine start switch momentarily to the GND position.

NOTE: The igniter plugs will fire when the engine start switch is moved to any position other than OFF. For this test, move the engine start switch only to the GND position, not to the AUTO, FLT or CONT positions.

2) Make sure the igniter plug fires.

NOTE: This does not tell you about the condition of the igniter plug. The spark can come from an area other than the igniter tip.

E. Return the Aircraft to its Usual Condition.

(1) Move the Fuel Control Switch to the CUTOFF position.

BOEING PROPRIETARY - Copyright (C) - Unpublished Work - See title page for details.

MECH	INSP

(2) Remove the DO-NOT-CLOSE tags and close these overhead panel P11 circuit breakers:

(a) 11D7, STANDBY IGNITION 1

(b) 11D8, STANDBY IGNITION 2

(3) For the left engine, remove the DO-NOT-CLOSE tags and close these overhead panel P11 circuit breakers:

(a) 11D19, ENGINE START CONT LEFT

(b) 11D25, ENGINE FUEL CONT VLV & EEC CHAN B RST L

(4) For the right engine, remove the DO-NOT-CLOSE tags and close these overhead panel P11 circuit breakers:

(a) 11D20, ENGINE START CONT RIGHT

(b) 11D26, ENGINE FUEL CONT VLV & EEC CHAN B RST R

(5) Do the activation procedure for the thrust reverser (AMM 78-31-00/201).

(6) Remove the electrical power if it is not necessary (AMM 24-22-00/201).

BOEING PROPRIETARY - Copyright (C) - Unpublished Work - See title page for details.

SKILL	WORK AREA	RELATED TASK	INTERVAL	PHASE	MPD REV	TASK CARD REVISION
ENGIN	ENGINE 2	W-74-406-01-2	01000 HRS	10202	006	APR 22/08

TASK	TITLE	STRUCTURAL ILLUSTRATION REFERENCE	APPLICABILITY AIRPLANE	APPLICABILITY ENGINE
OPERATIONAL	ENGINE 2 IGNITION SYSTEM		ALL	4000

ZONES	ACCESS PANELS
211 421	

MECH	INSP	MPD ITEM NUMBER

OPERATIONALLY CHECK (AUDIBLE CHECK) THE ENGINE 2 IGNITION SYSTEMS 1 AND 2 INDEPENDENTLY (IF NOT ALTERNATING STARTING SYSTEMS 1 AND 2). N74-00-00-5A

1. Audible Test of the Engine Ignition System

A. General

(1) The high energy spark supplied by the ignition system is easily heard. This procedure is an audible test of the applicable engine ignition system. If you can hear a spark then the airplane system, ignition exciters and high tension cables are in satisfactory condition. This does not tell you about the condition of the igniter plug. If the igniter ceramic is cracked, the igniter plug can spark through the cooling holes instead of at the tip.

B. References

(1) AMM 24-22-00/201, Electrical Power-Control

(2) AMM 71-00-00/201, Power Plant

C. Prepare for the Audible Test of the Ignition System

CAUTION: BEFORE YOU TEST THE IGNITION SYSTEM, DRY MOTOR THE ENGINE TO REMOVE ANY UNBURNED FUEL (AMM 71-00-00/201). UNBURNED FUEL MAY RESULT IN AN INTERNAL ENGINE FIRE OR TURBINE EXHAUST AREA FIRE. MAKE SURE N2 DOES NOT TURN WHEN YOU TEST THE IGNITION SYSTEM. IF N2 TURNS, FUEL CAN ENTER THE COMBUSTION CHAMBER WHEN THE FUEL CONTROL SWITCH IS PUT TO THE RUN POSITION. AN ACCIDENTAL ENGINE LIGHTUP COULD OCCUR.

BOEING PROPRIETARY - Copyright (C) - Unpublished Work - See title page for details.

MECH	INSP

(1) Dry motor the engine to clear the gas path of any remaining fuel (AMM 71-00-00/201).

NOTE: If you dry motored the engine immediately before and you know that there is no fuel in the engine, it is not necessary to dry motor the engine again.

(2) Do these steps to set the engine controls for the audible test of the engine ignition system:

(a) Supply electrical power (AMM 24-22-00/201).

(b) Make sure the fuel control switch is in the RUN position.

(c) Make sure the engine start switch is in the OFF position.

(d) Make sure the engine start VALVE light is not on.

(e) Make sure the ENG VALVE light is on.

(f) Open these overhead panel P11 circuit breakers and attach a DO-NOT-CLOSE tag:

1) 11D7, STANDBY IGNITION 1

2) 11D8, STANDBY IGNITION 2

CAUTION: IF YOU DO NOT OPEN THE START CONT CIRCUIT BREAKER OR THE THE FUEL CONTROL VLV CIRCUIT BREAKER IT WILL CAUSE THE ENGINE TO MOTOR WHEN THE ENGINE START SWITCH IS PUT TO THE GND POSITION. THIS WILL OCCUR IF THE AIRPLANE PNEUMATIC SYSTEM IS PRESSURIZED.

(g) For the left engine, open these overhead panel P11 circuit breakers and attach a DO-NOT-CLOSE tag:

1) 11D19, ENGINE START CONT LEFT

2) 11D25, ENGINE FUEL CONT VLV & EEC CHAN B RST L

(h) For the right engine, open these overhead panel P11 circuit breakers and attach a DO-NOT-CLOSE tag:

1) 11D20, ENGINE START CONT RIGHT

BOEING PROPRIETARY - Copyright (C) - Unpublished Work - See title page for details.

MECH | INSP

2) 11D26, ENGINE FUEL CONT VLV & EEC CHAN B RST R

(i) For the left engine, make sure these overhead panel P11 circuit breakers are closed:

1) 11M1, L IGN 1

2) 11M9, LEFT ENG BUS POWER SENSE

3) 11M28, L IGN 2

(j) For the right engine, make sure these overhead panel P11 circuit breakers are closed:

1) 11M2, R IGN 1

2) 11M29, R IGN 2

3) 11M36, RIGHT ENG BUS POWER SENSE

WARNING: DO THE THRUST REVERSER DEACTIVATION PROCEDURE TO PREVENT THE OPERATION OF THE THRUST REVERSER. ACCIDENTAL OPERATION OF THE THRUST REVERSER CAN CAUSE INJURY TO PERSONS OR DAMAGE TO EQUIPMENT.

(3) Do this procedure: Thrust Reverser Deactivation for Ground Maintenance (AMM 78-31-00/201).

D. Procedure

WARNING: YOU MUST BE VERY CAREFUL WHEN YOU WORK ON THE IGNITION SYSTEM. IGNITION VOLTAGE IS VERY DANGEROUS. DO NOT TOUCH THE IGNITER PLUGS, THE ENERGIZED PART OF THE IGNITION EXCITER, OR THE IGNITION WIRES WHEN THE IGNITION SYSTEM IS ENERGIZED. IF YOU DO NOT OBEY THIS INSTRUCTION, INJURIES TO PERSONS AND DAMAGE TO EQUIPMENT CAN OCCUR.

WARNING: DO NOT DO THE CHECK OF THE IGNITION SYSTEM IF THE AIRPLANE IS NOT IN A SAFE CONDITION AND A SAFE LOCATION. IF YOU DO NOT OBEY THIS INSTRUCTION, INJURIES TO PERSONS OR DAMAGE TO THE AIRPLANE OR EQUIPMENT CAN OCCUR.

BOEING PROPRIETARY - Copyright (C) - Unpublished Work - See title page for details.

MECH	INSP

(1) Do these steps to make sure the airplane is in a safe condition and a safe location to do the check:

(a) Make sure the airplane is not being fueled.

(b) Make sure the airplane is not in the hangar.

(c) Make sure there are no buildings, airplanes, equipment or persons in the jet-wake hazard area for the applicable engine(s) that will operate at ground idle (AMM 71-00-00/201).

(2) Do the audible test of the engine ignition system.

(a) Do these steps with the ignition select switch positioned to 1, then repeat the steps with the ignition select switch positioned to 2.

CAUTION: MAKE SURE N2 DOES NOT TURN WHEN WHEN YOU DO THE IGNITION SYSTEM TEST. IF N2 TURNS, FUEL CAN ENTER THE COMBUSTION CHAMBER WHEN THE FUEL CONTROL SWITCH IS PUT TO THE RUN POSITION. ACCIDENTAL ENGINE LIGHTUP CAN OCCUR.

1) Turn and hold the engine start switch momentarily to the GND position.

NOTE: The igniter plugs will fire when the engine start switch is moved to any position other than OFF. For this test, move the engine start switch only to the GND position, not to the AUTO, FLT or CONT positions.

2) Make sure the igniter plug fires.

NOTE: This does not tell you about the condition of the igniter plug. The spark can come from an area other than the igniter tip.

E. Return the Aircraft to its Usual Condition.

(1) Move the Fuel Control Switch to the CUTOFF position.

BOEING PROPRIETARY - Copyright (C) - Unpublished Work - See title page for details.

MECH	INSP

(2) Remove the DO-NOT-CLOSE tags and close these overhead panel P11 circuit breakers:

(a) 11D7, STANDBY IGNITION 1

(b) 11D8, STANDBY IGNITION 2

(3) For the left engine, remove the DO-NOT-CLOSE tags and close these overhead panel P11 circuit breakers:

(a) 11D19, ENGINE START CONT LEFT

(b) 11D25, ENGINE FUEL CONT VLV & EEC CHAN B RST L

(4) For the right engine, remove the DO-NOT-CLOSE tags and close these overhead panel P11 circuit breakers:

(a) 11D20, ENGINE START CONT RIGHT

(b) 11D26, ENGINE FUEL CONT VLV & EEC CHAN B RST R

(5) Do the activation procedure for the thrust reverser (AMM 78-31-00/201).

(6) Remove the electrical power if it is not necessary (AMM 24-22-00/201).

BOEING PROPRIETARY - Copyright (C) - Unpublished Work - See title page for details.

SKILL	WORK AREA	RELATED TASK	INTERVAL	PHASE	MPD REV	TASK CARD REVISION
AIRPL	CREW CABIN		2C	12424	006	APR 22/09

TASK	TITLE	STRUCTURAL ILLUSTRATION REFERENCE	APPLICABILITY AIRPLANE	APPLICABILITY ENGINE
OPERATIONAL	IGNITION CONTROL SYSTEM		ALL	4000

ZONES	ACCESS PANELS
211	

MECH | INSP | MPD ITEM NUMBER

OPERATIONALLY CHECK THE IGNITION CONTROL SYSTEM. N74-00-00-5B

1. Operational Test - Ignition Control System (Standby Power)

A. References

(1) AMM 24-22-00/201, Electrical Power-Control

(2) AMM 27-81-00/201, LE Slat System

(3) AMM 36-00-00/201, Pneumatic - General

(4) AMM 71-00-00/201, Power Plant

B. Prepare for the Operational Test of the Ignition Control System

CAUTION: BEFORE YOU TEST THE IGNITION SYSTEM, DRY MOTOR THE ENGINE TO REMOVE ANY UNBURNED FUEL (AMM 71-00-00/201). UNBURNED FUEL MAY RESULT IN AN INTERNAL ENGINE FIRE OR TURBINE EXHAUST AREA FIRE. MAKE SURE N2 DOES NOT TURN WHEN YOU TEST THE IGNITION SYSTEM. IF N2 TURNS, FUEL CAN ENTER THE COMBUSTION CHAMBER WHEN THE FUEL CONTROL SWITCH IS PUT TO THE RUN POSITION. AN ACCIDENTAL ENGINE LIGHTUP COULD OCCUR.

(1) Dry motor the engine to clear the gas path of any remaining fuel (AMM 71-00-00/201).

NOTE: If you dry motored the engine immediately before and you know that there is no fuel in the engine, it is not necessary to dry motor the engine again.

(2) Do these steps to set the engine controls for the ignition test:

BOEING PROPRIETARY - Copyright (C) - Unpublished Work - See title page for details.

MECH	INSP

(a) Supply electrical power (AMM 24-22-00/201).

(b) Make sure the fuel control switch is in the RUN position.

(c) Make sure the engine start switch is in the OFF position.

(d) Make sure the engine start VALVE light is not on.

(e) Make sure the ENG VALVE light is on.

(f) Open these overhead panel P11 circuit breakers and attach a DO-NOT-CLOSE tag:

1) 11D7, STANDBY IGNITION 1

2) 11D8, STANDBY IGNITION 2

CAUTION: IF YOU DO NOT OPEN THE START CONT CIRCUIT BREAKER IT WILL CAUSE THE ENGINE TO MOTOR WHEN THE ENGINE START SWITCH IS PUT TO THE GND POSITION. THIS WILL OCCUR IF THE AIRPLANE PNEUMATIC SYSTEM IS PRESSURIZED.

(g) For the left engine, open these overhead panel P11 circuit breakers and attach the DO-NOT-CLOSE tags:

1) 11D19, ENGINE START CONT LEFT

2) 11D25, ENGINE FUEL CONT VLV & EEC CHAN B RST L

(h) For the right engine, open these overhead panel P11 circuit breakers and attach the DO-NOT-CLOSE tags:

1) 11D20, ENGINE START CONT RIGHT

2) 11D26, ENGINE FUEL CONT VLV & EEC CHAN B RST R

(i) For the left engine, make sure these overhead panel P11 circuit breakers are closed:

1) 11M1, L IGN 1

2) 11M28, L IGN 2

(j) For the right engine, make sure these overhead panel P11 circuit breakers are closed:

BOEING PROPRIETARY - Copyright (C) - Unpublished Work - See title page for details.

1) 11M2, R IGN 1

2) 11M29, R IGN 2

C. Procedure

WARNING: YOU MUST BE VERY CAREFUL WHEN YOU WORK ON THE IGNITION SYSTEM. IGNITION VOLTAGE IS VERY DANGEROUS. DO NOT TOUCH THE IGNITER PLUGS, THE ENERGIZED PART OF THE IGNITION EXCITER, OR THE IGNITION WIRES WHEN THE IGNITION SYSTEM IS ENERGIZED. IF YOU DO NOT OBEY THIS INSTRUCTION, INJURIES TO PERSONS AND DAMAGE TO EQUIPMENT CAN OCCUR.

WARNING: DO NOT DO THE CHECK OF THE IGNITON SYSTEM IF THE AIRPLANE IS NOT IN A SAFE CONDITION AND A SAFE LOCATION. IF YOU DO NOT OBEY THIS INSTRUCTION, INJURIES TO PERSONS OR DAMAGE TO THE AIRPLANE OR EQUIPMENT CAN OCCUR.

(1) Do these steps to make sure the airplane is in a safe condition and a safe location to do the check:

(a) Make sure the airplane is not being fueled.

(b) Make sure the airplane is not in the hangar.

(c) Make sure there are no buildings, airplanes, equipment or persons in the jet-wake hazard area for the applicable engine(s) that will operate at ground idle (AMM 71-00-00/201).

(2) Do these steps to test the igniter circuit standby power:

(a) Open these overhead panel P11 circuit breakers and attach a DO-NOT-CLOSE tag:

1) 11M9, LEFT ENG BUS POWER SENSE

2) 11M36, RIGHT ENG BUS POWER SENSE

(b) Remove the DO-NOT-CLOSE tags and close these overhead panel P11 circuit breakers:

1) 11D7, STANDBY IGNITION 1

BOEING PROPRIETARY - Copyright (C) - Unpublished Work - See title page for details.

MECH	INSP

2) 11D8, STANDBY IGNITION 2

(c) Put the ignition select switch to the BOTH position.

(d) Turn and hold the engine start switch to the GND position.

(e) Make sure both igniter plugs fire.

(f) Press the ECS MSG key on the EICAS maintenance panel and make sure the IGN 1 STBY BUS and the IGN 2 STBY BUS messages appear on the EICAS maintenance message list.

(g) Put the ignition select switch to the 1 position.

(h) Make sure the igniter plug fires.

(i) Put the ignition select switch to the 2 position.

(j) Make sure the igniter plug fires.

(k) Put the ignition select switch to the BOTH position.

(l) Remove the DO-NOT-CLOSE tags and close these overhead panel P11 circuit breakers:

1) 11M9, LEFT ENG BUS POWER SENSE

2) 11M36, RIGHT ENG BUS POWER SENSE

(m) Open these overhead panel P11 circuit breakers and attach a DO-NOT-CLOSE tag:

1) 11D7, STANDBY IGNITION 1

2) 11D8, STANDBY IGNITION 2

(n) Make sure the IGN 1 STBY BUS and the IGN 2 STBY BUS messages have disappeared from the EICAS maintenance message list.

(o) Put the engine start switch to the OFF position.

(3) For the left engine, remove the DO-NOT-CLOSE tag and close this overhead panel P11 circuit breaker:

(a) 11D19, ENGINE START CONT LEFT

BOEING PROPRIETARY - Copyright (C) - Unpublished Work - See title page for details.

MECH	INSP

(4) For the right engine, remove the DO-NOT-CLOSE tag and close this overhead panel P11 circuit breaker:

(a) 11D20, ENGINE START CONT RIGHT

(5) Remove pneumatic power (AMM 36-00-00/201).

(6) Make sure the leading edge slats are in the retracted position (AMM 27-81-00/201).

(7) Do the test of the ignition control system as follows, with the ignition select switch to the 1 position, 2 position, and BOTH position:

NOTE: If it was necessary to test the standby power only, it is not necessary to do the test of of the ignition control system.

(a) For the left engine, make sure this overhead panel P11 circuit breaker is closed:

1) 11A16, ANTI-ICE ENG L

(b) For the right engine, make sure this overhead panel P11 circuit breaker is closed:

1) 11T19, ANTI-ICE ENG R

(c) Put the applicable engine ANTI-ICE switchlight to the ON position.

(d) Turn and hold the applicable engine start switch to the AUTO position.

1) Make sure the igniter plug fires.

(e) Put the engine ANTI-ICE switchlight to the OFF position.

1) Make sure the igniter plug does not fire.

(f) Turn and hold the engine start switch to the CONT position.

1) Make sure the igniter plug fires.

(g) Turn and hold the engine start switch to the FLT position.

1) Make sure that both igniter plugs fire.

BOEING PROPRIETARY - Copyright (C) - Unpublished Work - See title page for details.

MECH	INSP

(h) Turn and hold the engine start switch to the AUTO position.

1) Put the flap lever to the 1 unit position (AMM 27-51-00/201).

a) Make sure the igniter plug fires.

2) Put the flap lever back to the up position (AMM 27-51-00/201).

a) Make sure the igniter plug does not fire.

3) Open this overhead panel P11 circuit breaker and attach a DO-NOT-CLOSE tag:

a) 11C10, SLAT POS IND

4) Make sure the igniter plug fires.

5) Remove the DO-NOT-CLOSE tag and close this overhead panel P11 circuit breaker:

a) 11C10, SLAT POS IND

6) Make sure the igniter plug does not fire.

(i) Put the engine start switch to the OFF position.

(8) Move the Fuel Control Switch to the CUTOFF position.

(9) For the left engine, remove the DO-NOT-CLOSE tag and close this overhead panel P11 circuit breaker:

(a) 11D25, ENGINE FUEL CONT VLV & EEC CHAN B RST L

(10) For the right engine, remove the DO-NOT-CLOSE tag and close this overhead panel P11 circuit breaker:

(a) 11D26, ENGINE FUEL CONT VLV & EEC CHAN B RST R

(11) Remove the electrical power if it is not necessary (AMM 24-22-00/201).

BOEING PROPRIETARY - Copyright (C) - Unpublished Work - See title page for details.

STATION		BOEING CARD NO.
TAIL NO.	SAS BOEING 767 TASK CARD	74-404-01-1
DATE		AIRLINE CARD NO.

SKILL	WORK AREA	RELATED TASK	INTERVAL	PHASE	MPD REV	TASK CARD REVISION
ENGIN	ENGINE 1	W-74-405-01-1	01000 HRS	10202	011	DEC 22/07

TASK	TITLE	STRUCTURAL ILLUSTRATION REFERENCE	APPLICABILITY AIRPLANE	APPLICABILITY ENGINE
CHECK/INSP	ENGINE 1 IGNITER PLUG CABLES		ALL	4000

ZONES	ACCESS PANELS
411	416AR 417AL 418AR

MECH	INSP	MPD ITEM NUMBER

VISUALLY CHECK THE ENGINE 1 EXCITER-TO-IGNITER PLUG CABLES FOR ARCING AND FLASHOVER. N74-21-01-6A

1. <u>Examine the Exciter-to-Igniter Plug Cable</u>

A. References

(1) AMM 71-11-04/201, Fan Cowl Panels

(2) AMM 71-11-06/201, Core Cowl Panels

(3) AMM 74-21-01/401, Exciter-to-Igniter Plug Cable

(4) AMM 74-21-01/701, Exciter-to-Igniter Plug Cable

(5) AMM 78-31-00/201, Thrust Reverser System

B. Access

(1) Location Zones

415	Fan reverser (Left)
416	Fan reverser (Right)
425	Fan reverser (Left)
426	Fan reverser (Right)

(2) Access Panels

415AL	Fan reverser (Left)
416AR	Fan reverser (Right)
425AL	Fan reverser (Left)
426AR	Fan reverser (Right)

C. Procedure

(1) Open the right fan cowl panel (AMM 71-11-04/201).

BOEING PROPRIETARY - Copyright (C) - Unpublished Work - See title page for details.

MECH	INSP

WARNING: DO THE THRUST REVERSER DEACTIVATION PROCEDURE TO PREVENT THE OPERATION OF THE THRUST REVERSER. ACCIDENTAL OPERATION OF THE THRUST REVERSER CAN CAUSE INJURY TO PERSONS OR DAMAGE TO EQUIPMENT.

(2) Do this procedure: Thrust Reverser Deactivation for Ground Maintenance (AMM 78-31-00/201).

(3) Open the right core cowl panel (AMM 71-11-06/201).

WARNING: OBEY THE INSTRUCTIONS IN AMM 78-31-00 WHEN YOU OPEN THE THRUST REVERSERS. IF YOU DO NOT OBEY THE INSTRUCTIONS, INJURY TO PERSONS OR DAMAGE TO EQUIPMENT CAN OCCUR.

(4) Open the right thrust reverser (AMM 78-31-00/201).

(5) Remove exciter-to-igniter plug cable (AMM 74-21-01/401).

CAUTION: DO NOT BEND OR PULL ON THE EXCITER-TO-IGNITER PLUG CABLE WHEN YOU EXAMINE IT. DAMAGE TO THE INSULATION CAN OCCUR.

(6) Replace the exciter-to-igniter plug cable if there are any of these conditions (Fig. 601) (AMM 74-21-01/401).

(a) Look for any cuts or abrasions on the cable.

(b) Look for any hard, brittle, or cracked areas on the cable.

(7) Examine the ends of the exciter-to-igniter plug cable.

(a) Examine the coupling nut for worn or damaged threads.

(b) Move the coupling nut until you can remove the grommet.

1) Discard the grommet.

NOTE: This inspection and the removal of the grommet are always done at the same time.

BOEING PROPRIETARY - Copyright (C) - Unpublished Work - See title page for details.

MECH	INSP

(c) Examine the ceramic sleeves and the rubber bushings on the cable ends (Fig. 602).

1) If the rubber bushing is hard, brittle, cracked, or shows signs of carbon tracking, replace the bushing (AMM 74-21-01/401).

2) Clean the ceramic sleeves if signs of carbon tracking are found (AMM 74-21-01/701).

(8) Clean the exposed parts of the cable assemble if there is any oil, dirt, or conductive contaminants on it (AMM 74-21-01/701).

(9) Install a new grommet.

(10) Install the exciter-to-igniter plug cable (AMM 74-21-01/401).

WARNING: OBEY THE INSTRUCTIONS IN AMM 78-31-00 WHEN YOU CLOSE THE THRUST REVERSERS. IF YOU DO NOT OBEY THE INSTRUCTIONS, INJURY TO PERSONS OR DAMAGE TO EQUIPMENT CAN OCCUR.

(11) Close the right thrust reverser (AMM 78-31-00/201).

(12) Close the right core cowl panel (AMM 71-11-06/201).

(13) Do the activation procedure for the thrust reverser (AMM 78-31-00/201).

(14) Close the right fan cowl panel (AMM 71-11-04/201).

BOEING PROPRIETARY - Copyright (C) - Unpublished Work - See title page for details.

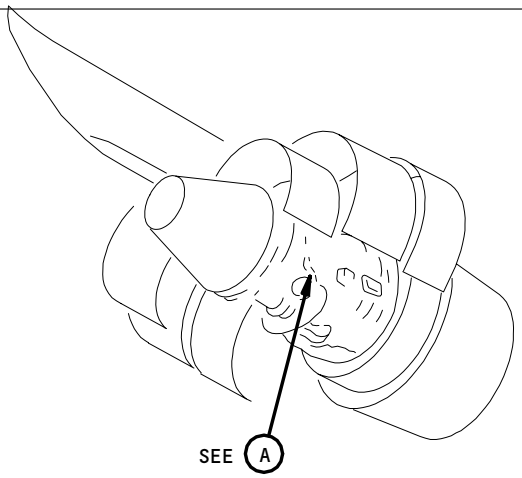

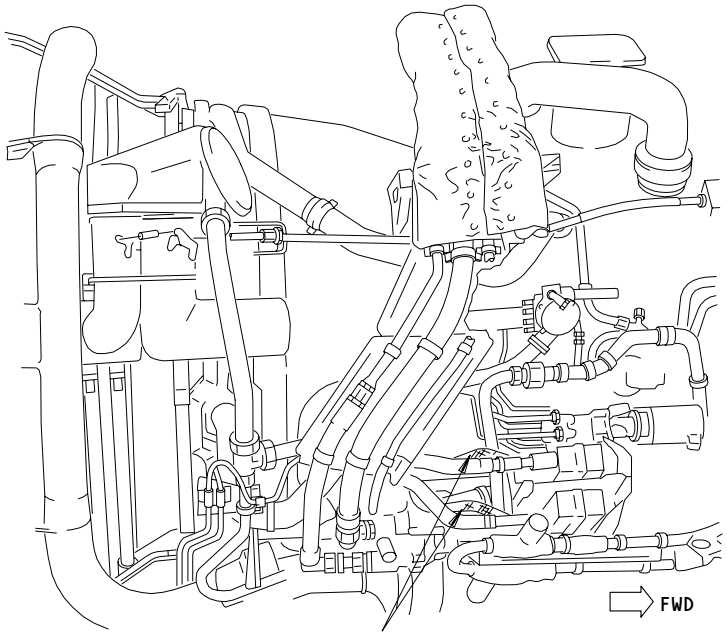

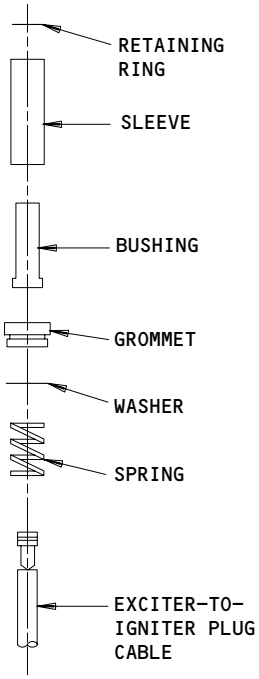

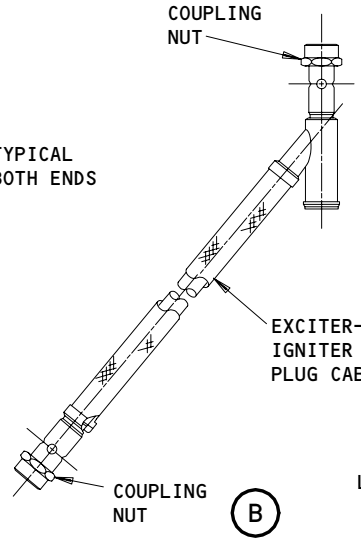

Exciter-To-Igniter Plug Cable Inspection
Figure 601

BOEING PROPRIETARY - Copyright (C) - Unpublished Work - See title page for details.

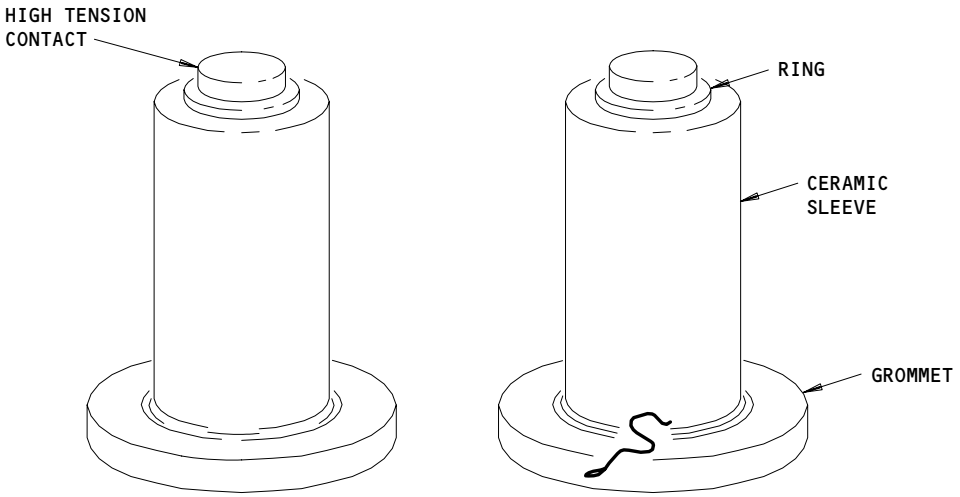

NEW

EARLY STAGE

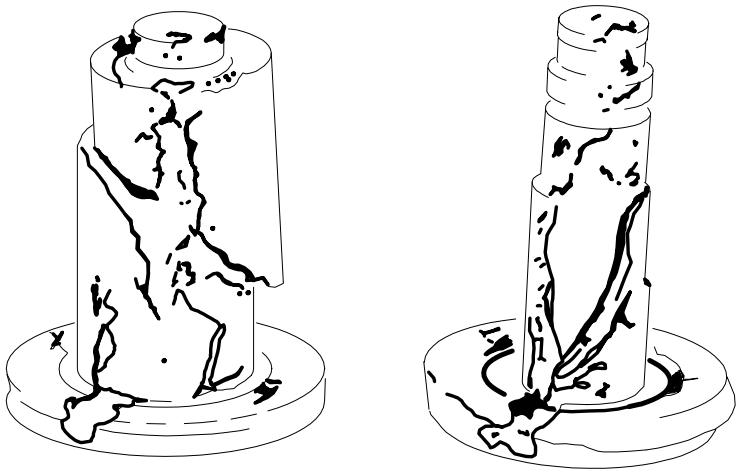

LATE STAGE

Ceramic Sleeve Flashover Damage
Figure 602

BOEING PROPRIETARY - Copyright (C) - Unpublished Work - See title page for details.

STATION		BOEING CARD NO.
TAIL NO.	SAS BOEING 767 TASK CARD	74-404-01-2
DATE		AIRLINE CARD NO.

SKILL	WORK AREA	RELATED TASK	INTERVAL	PHASE	MPD REV	TASK CARD REVISION
ENGIN	ENGINE 2	W-74-405-01-2	01000 HRS	10202	011	DEC 22/07

TASK	TITLE	STRUCTURAL ILLUSTRATION REFERENCE	APPLICABILITY AIRPLANE	APPLICABILITY ENGINE
CHECK/INSP	ENGINE 2 IGNITER PLUG CABLES		ALL	4000

ZONES	ACCESS PANELS
421	426AR 427AL 428AR

MECH	INSP	MPD ITEM NUMBER

VISUALLY CHECK THE ENGINE 2 EXCITER-TO-IGNITER PLUG CABLES FOR ARCING AND FLASHOVER. N74-21-01-6A

1. Examine the Exciter-to-Igniter Plug Cable

A. References

(1) AMM 71-11-04/201, Fan Cowl Panels

(2) AMM 71-11-06/201, Core Cowl Panels

(3) AMM 74-21-01/401, Exciter-to-Igniter Plug Cable

(4) AMM 74-21-01/701, Exciter-to-Igniter Plug Cable

(5) AMM 78-31-00/201, Thrust Reverser System

B. Access

(1) Location Zones

415	Fan reverser (Left)
416	Fan reverser (Right)
425	Fan reverser (Left)
426	Fan reverser (Right)

(2) Access Panels

415AL	Fan reverser (Left)
416AR	Fan reverser (Right)
425AL	Fan reverser (Left)
426AR	Fan reverser (Right)

C. Procedure

(1) Open the right fan cowl panel (AMM 71-11-04/201).

BOEING PROPRIETARY - Copyright (C) - Unpublished Work - See title page for details.

MECH	INSP

WARNING: DO THE THRUST REVERSER DEACTIVATION PROCEDURE TO PREVENT THE OPERATION OF THE THRUST REVERSER. ACCIDENTAL OPERATION OF THE THRUST REVERSER CAN CAUSE INJURY TO PERSONS OR DAMAGE TO EQUIPMENT.

(2) Do this procedure: Thrust Reverser Deactivation for Ground Maintenance (AMM 78-31-00/201).

(3) Open the right core cowl panel (AMM 71-11-06/201).

WARNING: OBEY THE INSTRUCTIONS IN AMM 78-31-00 WHEN YOU OPEN THE THRUST REVERSERS. IF YOU DO NOT OBEY THE INSTRUCTIONS, INJURY TO PERSONS OR DAMAGE TO EQUIPMENT CAN OCCUR.

(4) Open the right thrust reverser (AMM 78-31-00/201).

(5) Remove exciter-to-igniter plug cable (AMM 74-21-01/401).

CAUTION: DO NOT BEND OR PULL ON THE EXCITER-TO-IGNITER PLUG CABLE WHEN YOU EXAMINE IT. DAMAGE TO THE INSULATION CAN OCCUR.

(6) Replace the exciter-to-igniter plug cable if there are any of these conditions (Fig. 601) (AMM 74-21-01/401).

(a) Look for any cuts or abrasions on the cable.

(b) Look for any hard, brittle, or cracked areas on the cable.

(7) Examine the ends of the exciter-to-igniter plug cable.

(a) Examine the coupling nut for worn or damaged threads.

(b) Move the coupling nut until you can remove the grommet.

1) Discard the grommet.

NOTE: This inspection and the removal of the grommet are always done at the same time.

BOEING PROPRIETARY - Copyright (C) - Unpublished Work - See title page for details.

MECH	INSP

(c) Examine the ceramic sleeves and the rubber bushings on the cable ends (Fig. 602).

1) If the rubber bushing is hard, brittle, cracked, or shows signs of carbon tracking, replace the bushing (AMM 74-21-01/401).

2) Clean the ceramic sleeves if signs of carbon tracking are found (AMM 74-21-01/701).

(8) Clean the exposed parts of the cable assemble if there is any oil, dirt, or conductive contaminants on it (AMM 74-21-01/701).

(9) Install a new grommet.

(10) Install the exciter-to-igniter plug cable (AMM 74-21-01/401).

WARNING: OBEY THE INSTRUCTIONS IN AMM 78-31-00 WHEN YOU CLOSE THE THRUST REVERSERS. IF YOU DO NOT OBEY THE INSTRUCTIONS, INJURY TO PERSONS OR DAMAGE TO EQUIPMENT CAN OCCUR.

(11) Close the right thrust reverser (AMM 78-31-00/201).

(12) Close the right core cowl panel (AMM 71-11-06/201).

(13) Do the activation procedure for the thrust reverser (AMM 78-31-00/201).

(14) Close the right fan cowl panel (AMM 71-11-04/201).

BOEING PROPRIETARY - Copyright (C) - Unpublished Work - See title page for details.

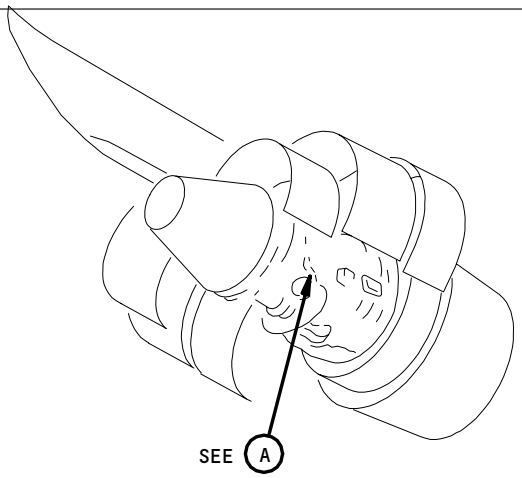

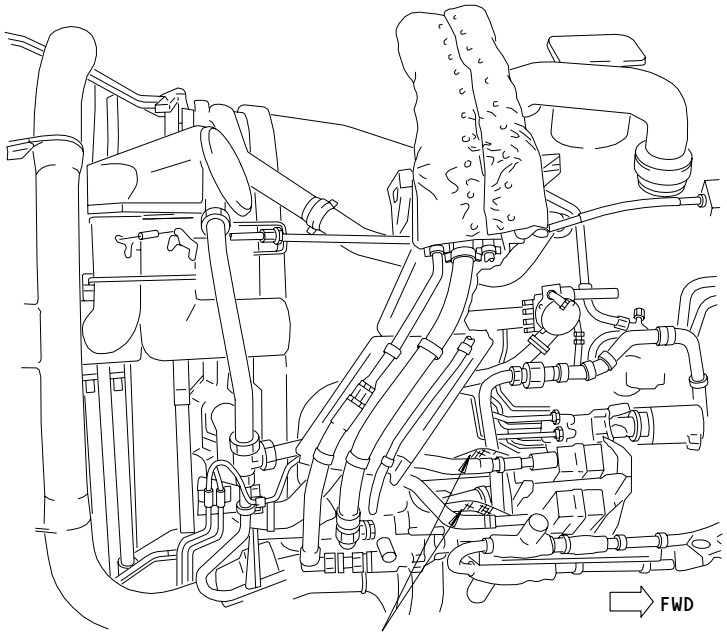

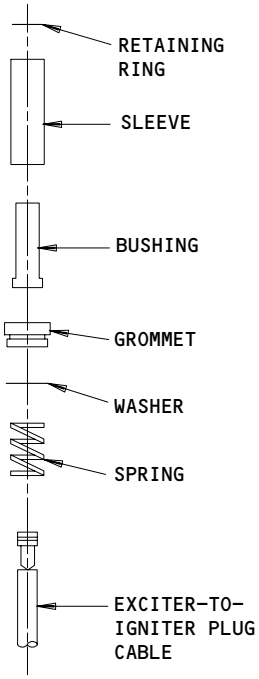

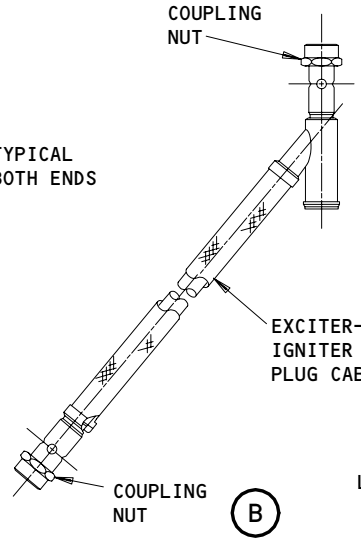

Exciter-To-Igniter Plug Cable Inspection
Figure 601

BOEING PROPRIETARY - Copyright (C) - Unpublished Work - See title page for details.

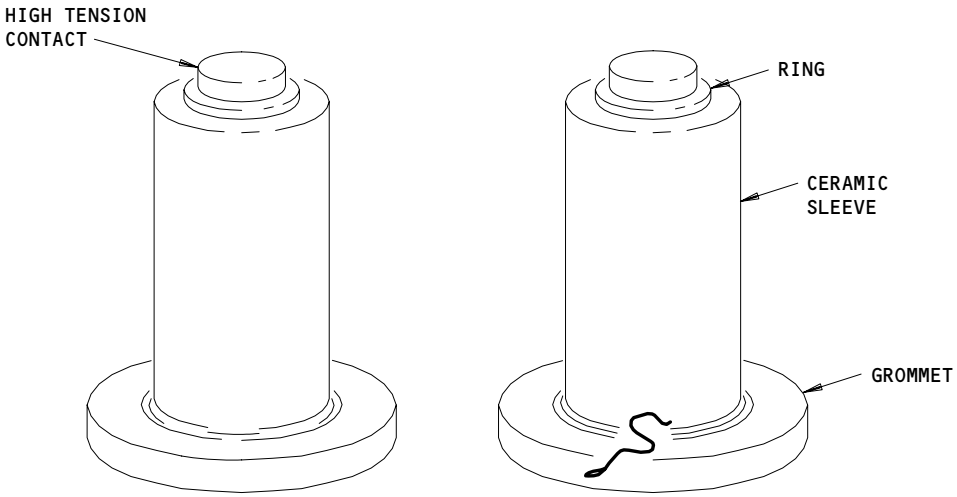

NEW

EARLY STAGE

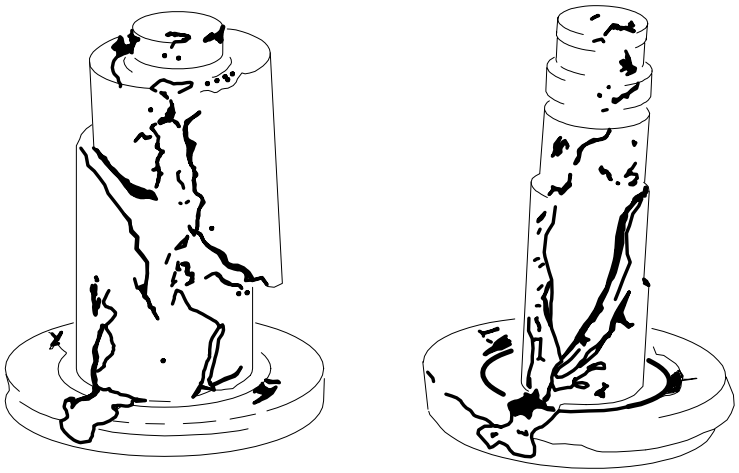

LATE STAGE

Ceramic Sleeve Flashover Damage
Figure 602

BOEING PROPRIETARY - Copyright (C) - Unpublished Work - See title page for details.

SKILL	WORK AREA	RELATED TASK	INTERVAL	PHASE	MPD REV	TASK CARD REVISION
ENGIN	ENGINE 1		01000 HRS	10202	011	DEC 22/08

TASK	TITLE	STRUCTURAL ILLUSTRATION REFERENCE	APPLICABILITY AIRPLANE	APPLICABILITY ENGINE
CHECK/INSP	ENGINE 1 IGNITION EXCITER		ALL	4000

ZONES	ACCESS PANELS
411	416AR 417AL 418AR

MECH | INSP | MPD ITEM NUMBER

VISUALLY CHECK THE ENGINE 1 IGNITION EXCITER CONNECTIONS FOR ARCING AND FLASHOVER. N74-11-01-6A

1. General

A. This procedure is used to make an inspection of the input and the output connectors on the ignition exciters.

B. The ignition exciter may be removed from the engine before you do the inspection.

(1) Removal of the ignition exciter will give you access to visually inspect the entire ignition exciter.

2. Inspect the Ignition Exciter

A. References

(1) AMM 71-11-04/201, Fan Cowl Panels

(2) AMM 71-11-06/201, Core Cowl Panels

(3) AMM 74-11-01/401, Ignition Exciter

(4) AMM 74-11-01/701, Ignition Exciter

(5) AMM 78-31-00/201, Thrust Reverser System

B. Equipment

(1) Thread Chasing Die (1.00-20UNEF-3A)
Tapco USA, Inc., 5605 Pike Rd,
Loves Park, IL 61111 (Recommended)
Commercially Available (Alternative) D00333

C. Consumables

BOEING PROPRIETARY - Copyright (C) - Unpublished Work - See title page for details.

MECH | INSP

(1) DOO333 Anti-Seize Compound - PMC 9523, Molykote Type Z

D. Procedure

(1) Open these circuit breakers on the overhead panel P11 and attach DO-NOT-CLOSE tags:

(a) 11D7, ENGINE STBY IGN 1

(b) 11D8, ENGINE STBY IGN 2

(c) For the left engine:

1) 11M1, L IGN 1

2) 11M9, LEFT ENGINE BUS PWR SENSE

3) 11M28, L IGN 2

(2) Open the right fan cowl panel (AMM 71-11-04/201).

WARNING: DO THE THRUST REVERSER DEACTIVATION PROCEDURE TO PREVENT THE OPERATION OF THE THRUST REVERSER. ACCIDENTAL OPERATION OF THE THRUST REVERSER CAN CAUSE INJURY TO PERSONS OR DAMAGE TO EQUIPMENT.

(3) Do this procedure: Thrust Reverser Deactivation for Ground Maintenance (AMM 78-31-00/201).

(4) Open the right core cowl panel (AMM 71-11-06/201).

WARNING: OBEY THE INSTRUCTIONS IN AMM 78-31-00 WHEN YOU OPEN THE THRUST REVERSERS. IF YOU DO NOT OBEY THE INSTRUCTIONS, INJURY TO PERSONS OR DAMAGE TO EQUIPMENT CAN OCCUR.

(5) Open the right thrust reverser (AMM 78-31-00/201).

BOEING PROPRIETARY - Copyright (C) - Unpublished Work - See title page for details.

MECH	INSP

WARNING: THE IGNITION SWITCH MUST BE IN THE OFF POSITION BEFORE YOU REMOVE THE IGNITION COMPONENTS. MAKE SURE THE IGNITION SYSTEM IS NOT ENERGIZED FOR ONE MINUTE BEFORE YOU REMOVE THE IGNITION COMPONENTS. WHEN THE CABLE IS DISCONNECTED FROM THE IGNITER PLUG, GROUND THE CABLE TO MAKE SURE THAT ALL OF THE ENERGY IS OUT OF THE SYSTEM. IF YOU DO NOT FOLLOW THIS PROCEDURE, YOU CAN CAUSE INJURY TO PERSONS.

WARNING: MAKE SURE YOU GROUND THE EXCITER-TO-IGNITER CABLE TERMINAL TO THE BODY SHIELD ON THE IGNITER PLUG. THIS WILL RELEASE THE HIGH VOLTAGE FROM THE IGNITION EXCITER. IF YOU DO NOT OBEY THESE INSTRUCTIONS, INJURIES TO PERSONS CAN OCCUR.

CAUTION: PULL THE CABLE END IN A STRAIGHT DIRECTION WHEN YOU DISCONNECT THE CABLE FROM THE IGNITER PLUG AND FROM THE EXCITER. IF YOU APPLY A LATERAL FORCE ON THE CABLE, YOU CAN CAUSE DAMAGE TO THE CABLE.

(6) If the ignition exciter will be removed (AMM 74-11-01/401):

(a) Visually examine the ignition exciter for dirt and damage in this area:

1) Dirt or unwanted items in the contact well area.

a) If they are found, clean the contact well area (AMM 74-11-01/701).

(7) If the ignition exciter was NOT removed, do these steps to release the high voltage from the ignition exciter:

(a) Disconnect the cable coupling nut from the igniter plug.

(b) Immediately ground the exciter-to-igniter cable to the body shield on the igniter plug.

(8) Examine the input connector for bent or damaged pins.

(a) If the pins are bent, make them straight with long-nose pliers.

(b) If the pins are damaged, replace the ignition exciter (AMM 74-11-01/401).

(9) Examine the output receptacle well for damage or signs of arcing or flashover on the contact button.

BOEING PROPRIETARY - Copyright (C) - Unpublished Work - See title page for details.

MECH | INSP

(a) Pits or discoloration on the contact button are a result of arcing.

1) You can resurface the contact button to repair small defects caused by arcing (AMM 74-11-01/701).

(b) Carbon tracking is the result of flashover.

(c) For these conditions you must replace the ignition exciter (AMM 74-11-01/401).

(10) Examine the threads of each outlet on the ignition exciter.

(a) Repair minor damage to the threads with the thread chasing die.

(b) For other than small repairs, you must replace the ignition exciter (AMM 74-11-01/401).

(11) Look for cracks, dents or abrasions on the case of the ignition exciter.

CAUTION: PUSH THE CABLE END IN A STRAIGHT DIRECTION WHEN YOU CONNECT THE CABLE TO THE IGNITER PLUG AND THE EXCITER. IF YOU APPLY A LATERAL FORCE ON THE CABLE, YOU CAN CAUSE DAMAGE TO THE CABLE.

(12) If the ignition exciter was NOT removed, do these steps to connect the igniter-to-exciter cable to the igniter plug and exciter:

(a) Install the ignition exciter clamp (1) on the cable end that attaches to the igniter plug (Fig. 601).

(b) Lubricate the coupling nut threads that connect to the igniter plug with the antiseize compound.

NOTE: Do not apply too much antiseize compound to the coupling nut, or the cable will not have a good contact.

(c) Connect the cable to the igniter plug.

1) Keep the coupling nut sufficiently loose to permit free movement of the cable.

(d) Tighten the coupling nuts at each end of the cable.

BOEING PROPRIETARY - Copyright (C) - Unpublished Work - See title page for details.

MECH	INSP

(13) If the ignition exciter was removed, install the ignition exciter (if not replaced) (AMM 74-11-01/401).

WARNING: OBEY THE INSTRUCTIONS IN AMM 78-31-00 WHEN YOU CLOSE THE THRUST REVERSERS. IF YOU DO NOT OBEY THE INSTRUCTIONS, INJURY TO PERSONS OR DAMAGE TO EQUIPMENT CAN OCCUR.

(14) Close the right thrust reverser (AMM 78-31-00/201).

(15) Close the right core cowl panel (AMM 71-11-06/201).

(16) Do the activation procedure for the thrust reverser (AMM 78-31-00/201).

(17) Close the right fan cowl panel (AMM 71-11-04/201).

(18) Remove the DO-NOT-CLOSE tags and close these circuit breakers on the overhead panel P11:

(a) 11D7, ENGINE STBY IGN 1

(b) 11D8, ENGINE STBY IGN 2

(c) For the left engine:

1) 11M1, L IGN 1

2) 11M9, LEFT ENGINE BUS PWR SENSE

3) 11M28, L IGN 2

(19) Do the audible check procedure for the ignition system (AMM 74-00-00/501).

BOEING PROPRIETARY - Copyright (C) - Unpublished Work - See title page for details.

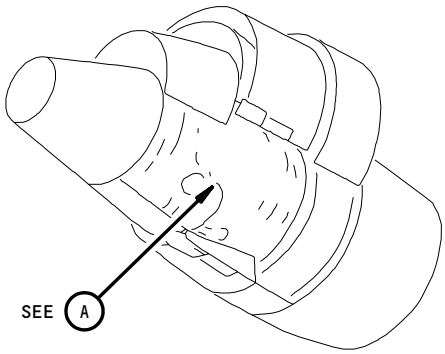

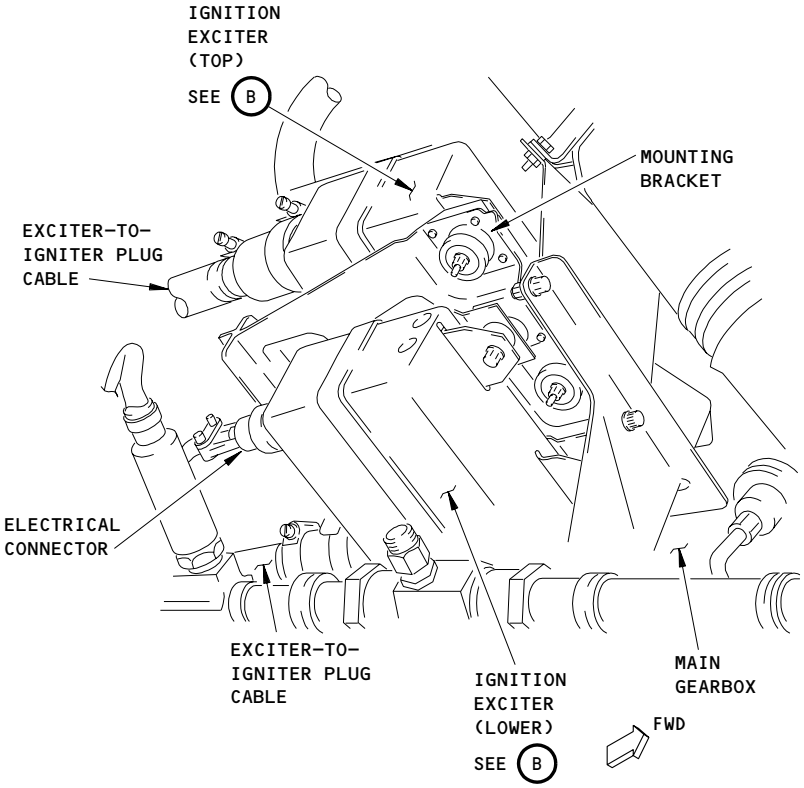

A

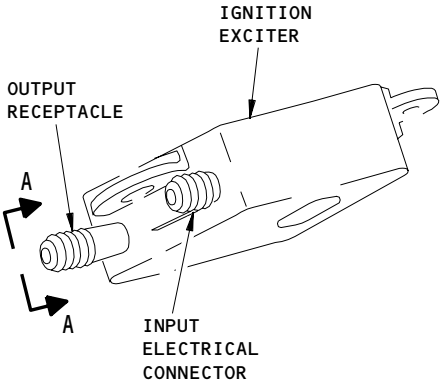

IGNITION EXCITER

B

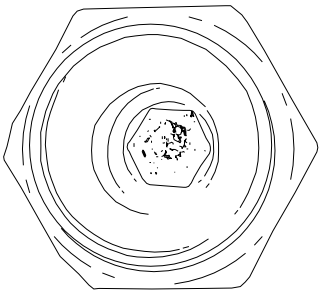

ARCING ON CONTACT BUTTON

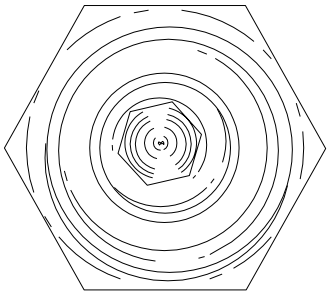

NO ARCING ON CONTACT BUTTON

A-A

Ignition Exciter Inspection
Figure 601 (Sheet 1)

BOEING PROPRIETARY - Copyright (C) - Unpublished Work - See title page for details.

SKILL	WORK AREA	RELATED TASK	INTERVAL	PHASE	MPD REV	TASK CARD REVISION
ENGIN	ENGINE 2		01000 HRS	10202	011	DEC 22/08

TASK	TITLE	STRUCTURAL ILLUSTRATION REFERENCE	APPLICABILITY AIRPLANE	APPLICABILITY ENGINE
CHECK/INSP	ENGINE 2 IGNITION EXCITER		ALL	4000

ZONES	ACCESS PANELS
421	426AR 427AL 428AR

MECH	INSP	MPD ITEM NUMBER

VISUALLY CHECK THE ENGINE 2 IGNITION EXCITER CONNECTIONS FOR ARCING AND FLASHOVER. N74-11-01-6B

1. General

A. This procedure is used to make an inspection of the input and the output connectors on the ignition exciters.

B. The ignition exciter may be removed from the engine before you do the inspection.

(1) Removal of the ignition exciter will give you access to visually inspect the entire ignition exciter.

2. Inspect the Ignition Exciter

A. References

(1) AMM 71-11-04/201, Fan Cowl Panels

(2) AMM 71-11-06/201, Core Cowl Panels

(3) AMM 74-11-01/401, Ignition Exciter

(4) AMM 74-11-01/701, Ignition Exciter

(5) AMM 78-31-00/201, Thrust Reverser System

B. Equipment

(1) Thread Chasing Die (1.00-20UNEF-3A)
Tapco USA, Inc., 5605 Pike Rd,
Loves Park, IL 61111 (Recommended)
Commercially Available (Alternative) D00333

C. Consumables

BOEING PROPRIETARY - Copyright (C) - Unpublished Work - See title page for details.

MECH | INSP

(1) DOO333 Anti-Seize Compound - PMC 9523, Molykote Type Z

D. Procedure

(1) Open these circuit breakers on the overhead panel P11 and attach DO-NOT-CLOSE tags:

(a) 11D7, ENGINE STBY IGN 1

(b) 11D8, ENGINE STBY IGN 2

(c) For the right engine:

1) 11M2, R IGN 1

2) 11M29, R IGN 2

3) 11M36, RIGHT ENGINE BUS PWR SENSE

(2) Open the right fan cowl panel (AMM 71-11-04/201).

WARNING: DO THE THRUST REVERSER DEACTIVATION PROCEDURE TO PREVENT THE OPERATION OF THE THRUST REVERSER. ACCIDENTAL OPERATION OF THE THRUST REVERSER CAN CAUSE INJURY TO PERSONS OR DAMAGE TO EQUIPMENT.

(3) Do this procedure: Thrust Reverser Deactivation for Ground Maintenance (AMM 78-31-00/201).

(4) Open the right core cowl panel (AMM 71-11-06/201).

WARNING: OBEY THE INSTRUCTIONS IN AMM 78-31-00 WHEN YOU OPEN THE THRUST REVERSERS. IF YOU DO NOT OBEY THE INSTRUCTIONS, INJURY TO PERSONS OR DAMAGE TO EQUIPMENT CAN OCCUR.

(5) Open the right thrust reverser (AMM 78-31-00/201).

BOEING PROPRIETARY - Copyright (C) - Unpublished Work - See title page for details.

MECH | INSP

WARNING: THE IGNITION SWITCH MUST BE IN THE OFF POSITION BEFORE YOU REMOVE THE IGNITION COMPONENTS. MAKE SURE THE IGNITION SYSTEM IS NOT ENERGIZED FOR ONE MINUTE BEFORE YOU REMOVE THE IGNITION COMPONENTS. WHEN THE CABLE IS DISCONNECTED FROM THE IGNITER PLUG, GROUND THE CABLE TO MAKE SURE THAT ALL OF THE ENERGY IS OUT OF THE SYSTEM. IF YOU DO NOT FOLLOW THIS PROCEDURE, YOU CAN CAUSE INJURY TO PERSONS.

WARNING: MAKE SURE YOU GROUND THE EXCITER-TO-IGNITER CABLE TERMINAL TO THE BODY SHIELD ON THE IGNITER PLUG. THIS WILL RELEASE THE HIGH VOLTAGE FROM THE IGNITION EXCITER. IF YOU DO NOT OBEY THESE INSTRUCTIONS, INJURIES TO PERSONS CAN OCCUR.

CAUTION: PULL THE CABLE END IN A STRAIGHT DIRECTION WHEN YOU DISCONNECT THE CABLE FROM THE IGNITER PLUG AND FROM THE EXCITER. IF YOU APPLY A LATERAL FORCE ON THE CABLE, YOU CAN CAUSE DAMAGE TO THE CABLE.

(6) If the ignition exciter will be removed (AMM 74-11-01/401):

(a) Visually examine the ignition exciter for dirt and damage in this area:

1) Dirt or unwanted items in the contact well area.

a) If they are found, clean the contact well area (AMM 74-11-01/701).

(7) If the ignition exciter was NOT removed, do these steps to release the high voltage from the ignition exciter:

(a) Disconnect the cable coupling nut from the igniter plug.

(b) Immediately ground the exciter-to-igniter cable to the body shield on the igniter plug.

(8) Examine the input connector for bent or damaged pins.

(a) If the pins are bent, make them straight with long-nose pliers.

(b) If the pins are damaged, replace the ignition exciter (AMM 74-11-01/401).

(9) Examine the output receptacle well for damage or signs of arcing or flashover on the contact button.

BOEING PROPRIETARY - Copyright (C) - Unpublished Work - See title page for details.

(a) Pits or discoloration on the contact button are a result of arcing.

1) You can resurface the contact button to repair small defects caused by arcing (AMM 74-11-01/701).

(b) Carbon tracking is the result of flashover.

(c) For these conditions you must replace the ignition exciter (AMM 74-11-01/401).

(10) Examine the threads of each outlet on the ignition exciter.

(a) Repair minor damage to the threads with the thread chasing die.

(b) For other than small repairs, you must replace the ignition exciter (AMM 74-11-01/401).

(11) Look for cracks, dents or abrasions on the case of the ignition exciter.

CAUTION: PUSH THE CABLE END IN A STRAIGHT DIRECTION WHEN YOU CONNECT THE CABLE TO THE IGNITER PLUG AND THE EXCITER. IF YOU APPLY A LATERAL FORCE ON THE CABLE, YOU CAN CAUSE DAMAGE TO THE CABLE.

(12) If the ignition exciter was NOT removed, do these steps to connect the igniter-to-exciter cable to the igniter plug and exciter:

(a) Install the ignition exciter clamp (1) on the cable end that attaches to the igniter plug (Fig. 601).

(b) Lubricate the coupling nut threads that connect to the igniter plug with the antiseize compound.

NOTE: Do not apply too much antiseize compound to the coupling nut, or the cable will not have a good contact.

(c) Connect the cable to the igniter plug.

1) Keep the coupling nut sufficiently loose to permit free movement of the cable.

(d) Tighten the coupling nuts at each end of the cable.

BOEING PROPRIETARY - Copyright (C) - Unpublished Work - See title page for details.

MECH	INSP

(13) If the ignition exciter was removed, install the ignition exciter (if not replaced) (AMM 74-11-01/401).

WARNING: OBEY THE INSTRUCTIONS IN AMM 78-31-00 WHEN YOU CLOSE THE THRUST REVERSERS. IF YOU DO NOT OBEY THE INSTRUCTIONS, INJURY TO PERSONS OR DAMAGE TO EQUIPMENT CAN OCCUR.

(14) Close the right thrust reverser (AMM 78-31-00/201).

(15) Close the right core cowl panel (AMM 71-11-06/201).

(16) Do the activation procedure for the thrust reverser (AMM 78-31-00/201).

(17) Close the right fan cowl panel (AMM 71-11-04/201).

(18) Remove the DO-NOT-CLOSE tags and close these circuit breakers on the overhead panel P11:

(a) 11D7, ENGINE STBY IGN 1

(b) 11D8, ENGINE STBY IGN 2

(c) For the right engine:

1) 11M2, R IGN 1

2) 11M29, R IGN 2

3) 11M36, RIGHT ENGINE BUS PWR SENSE

(19) Do the audible check procedure for the ignition system (AMM 74-00-00/501).

BOEING PROPRIETARY - Copyright (C) - Unpublished Work - See title page for details.

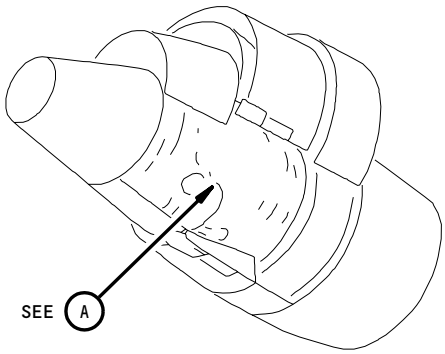

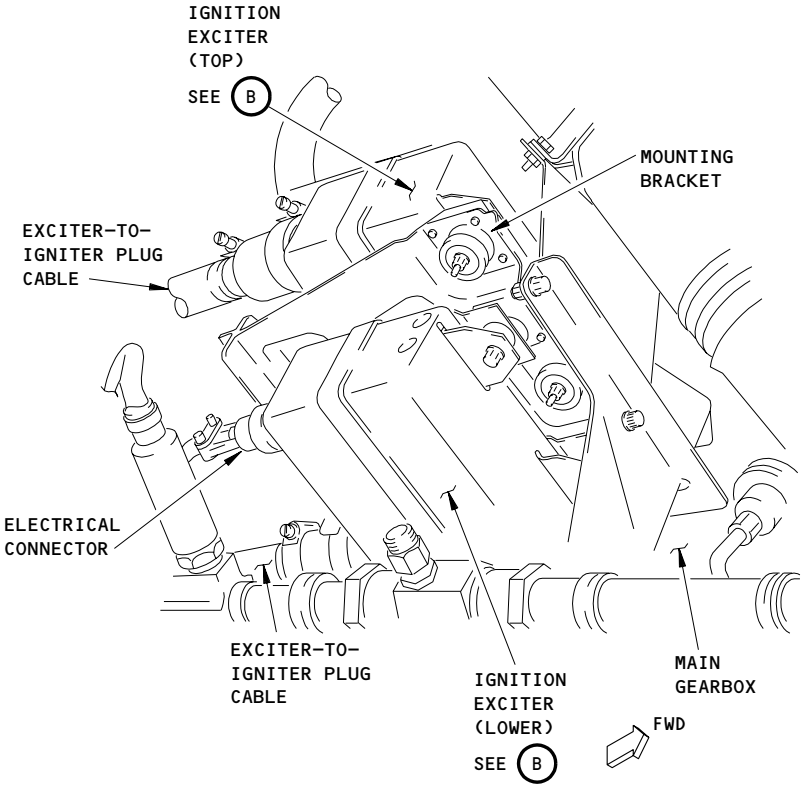

A

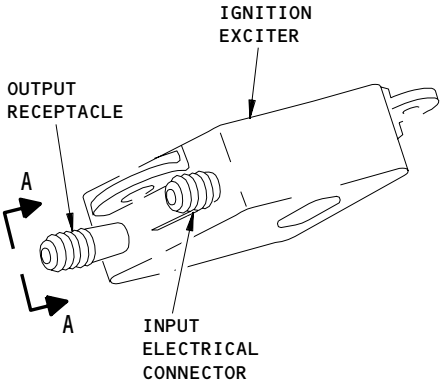

IGNITION EXCITER

B

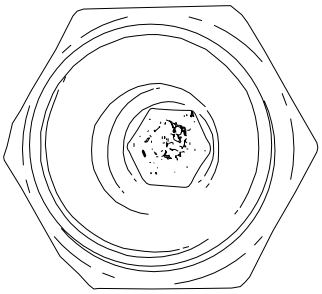

ARCING ON CONTACT BUTTON

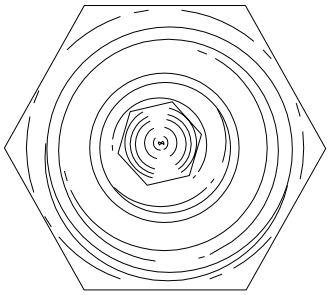

NO ARCING ON CONTACT BUTTON

A-A

Ignition Exciter Inspection
Figure 601 (Sheet 1)

BOEING PROPRIETARY - Copyright (C) - Unpublished Work - See title page for details.

SKILL	WORK AREA	RELATED TASK	INTERVAL	PHASE	MPD REV	TASK CARD REVISION
ENGIN	ENGINE 1	W-74-402-01-1	01000 HRS	10202	006	APR 22/09

TASK	TITLE	STRUCTURAL ILLUSTRATION REFERENCE	APPLICABILITY AIRPLANE	APPLICABILITY ENGINE
OPERATIONAL	ENGINE 1 CONTINUOUS IGNITION SYSTEM		ALL	4000

ZONES	ACCESS PANELS
211 411	

MECH	INSP	MPD ITEM NUMBER

OPERATIONALLY CHECK (AUDIBLE CHECK) THE ENGINE 1 CONTINUOUS IGNITION SYSTEM. N74-00-00-5C

1. Operational Test - Ignition System

A. References

(1) AMM 24-22-00/201, Electrical Power-Control

(2) AMM 71-00-00/201, Power Plant

B. Prepare for the Operational Test of the Ignition System

CAUTION: BEFORE YOU TEST THE IGNITION SYSTEM, DRY MOTOR THE ENGINE TO REMOVE ANY UNBURNED FUEL (AMM 71-00-00/201). UNBURNED FUEL MAY RESULT IN AN INTERNAL ENGINE FIRE OR TURBINE EXHAUST AREA FIRE. MAKE SURE N2 DOES NOT TURN WHEN YOU TEST THE IGNITION SYSTEM. IF N2 TURNS, FUEL CAN ENTER THE COMBUSTION CHAMBER WHEN THE FUEL CONTROL SWITCH IS PUT TO THE RUN POSITION. AN ACCIDENTAL ENGINE LIGHTUP COULD OCCUR.

(1) Dry motor the engine to clear the gas path of any remaining fuel (AMM 71-00-00/201).

NOTE: If you dry motored the engine immediately before and you know that there is no fuel in the engine, it is not necessary to dry motor the engine again.

(2) Do these steps to set the engine controls for the ignition test:

(a) Supply electrical power (AMM 24-22-00/201).

(b) Make sure the fuel control switch is in the RUN position.

BOEING PROPRIETARY - Copyright (C) - Unpublished Work - See title page for details.

MECH	INSP

(c) Make sure the engine start switch is in the OFF position.

(d) Make sure the engine start VALVE light is not on.

(e) Make sure the ENG VALVE light is on.

(f) Open these overhead panel P11 circuit breakers and attach the DO-NOT-CLOSE tags:

1) 11D7, STANDBY IGNITION 1

2) 11D8, STANDBY IGNITION 2

(g) For the left engine, open this overhead panel P11 circuit breaker and attach the DO-NOT-CLOSE tag:

1) 11D25, ENGINE FUEL CONT VLV & EEC CHAN B RST L

(h) For the right engine, open this overhead panel P11 circuit breaker and attach the DO-NOT-CLOSE tag:

1) 11D26, ENGINE FUEL CONT VLV & EEC CHAN B RST R

(i) For the left engine, make sure these overhead panel P11 circuit breakers are closed:

1) 11M1, L IGN 1

2) 11M9, LEFT ENG BUS POWER SENSE

3) 11M28, L IGN 2

(j) For the right engine, make sure these overhead panel P11 circuit breakers are closed:

1) 11M2, R IGN 1

2) 11M29, R IGN 2

3) 11M36, RIGHT ENG BUS POWER SENSE

C. Procedure

BOEING PROPRIETARY - Copyright (C) - Unpublished Work - See title page for details.

WARNING: YOU MUST BE VERY CAREFUL WHEN YOU WORK ON THE IGNITION SYSTEM. IGNITION VOLTAGE IS VERY DANGEROUS. DO NOT TOUCH THE IGNITER PLUGS, THE ENERGIZED PART OF THE IGNITION EXCITER, OR THE IGNITION WIRES WHEN THE IGNITION SYSTEM IS ENERGIZED. IF YOU DO NOT OBEY THIS INSTRUCTION, INJURIES TO PERSONS AND DAMAGE TO EQUIPMENT CAN OCCUR.

WARNING: DO NOT DO THE CHECK OF THE IGNITION SYSTEM IF THE AIRPLANE IS NOT IN A SAFE CONDITION AND A SAFE LOCATION. IF YOU DO NOT OBEY THIS INSTRUCTION, INJURIES TO PERSONS OR DAMAGE TO THE AIRPLANE OR EQUIPMENT CAN OCCUR.

(1) Do these steps to make sure the airplane is in a safe condition and a safe location to do the check:

(a) Make sure the airplane is not being fueled.

(b) Make sure the airplane is not in the hangar.

(c) Make sure there are no buildings, airplanes, equipment or persons in the jet-wake hazard area for the applicable engine(s) that will operate at ground idle (AMM 71-00-00/201).

(2) Do these steps to do a test of the ignition control system:

(a) Put the ignition select switch in the 1 position.

(b) Turn and hold the engine start switch in the CONT position.

1) Make sure the igniter plug fires.

2) When you hear the igniter plug fire, put the engine start switch in the OFF position.

(c) Put the ignition select switch in the 2 position.

(d) Turn and hold the engine start switch in the CONT position.

1) Make sure the igniter plug fires.

2) When you hear the igniter plug fire, put the engine start switch in the OFF position.

BOEING PROPRIETARY - Copyright (C) - Unpublished Work - See title page for details.

MECH	INSP

(3) Return the Aircraft to its Usual Condition.

(4) Move the Fuel Control Switch to the CUTOFF position.

(a) For the left engine, remove the DO-NOT-CLOSE tag and close this overhead panel P11 circuit breaker:

1) 11D25, ENGINE FUEL CONT VLV & EEC CHAN B RST L

(b) For the right engine, remove the DO-NOT-CLOSE tag and close this overhead panel P11 circuit breaker:

1) 11D26, ENGINE FUEL CONT VLV & EEC CHAN B RST R

(c) Remove the DO-NOT-CLOSE tags and close these overhead panel P11 circuit breakers:

1) 11D7, STANDBY IGNITION 1

2) 11D8, STANDBY IGNITION 2

(d) Remove electrical power if it is not necessary (AMM 24-22-00/201).

BOEING PROPRIETARY - Copyright (C) - Unpublished Work - See title page for details.

SKILL	WORK AREA	RELATED TASK	INTERVAL	PHASE	MPD REV	TASK CARD REVISION
ENGIN	ENGINE 2	W-74-402-01-2	01000 HRS	10202	006	APR 22/09

TASK	TITLE	STRUCTURAL ILLUSTRATION REFERENCE	APPLICABILITY AIRPLANE	APPLICABILITY ENGINE
OPERATIONAL	ENGINE 2 CONTINUOUS IGNITION SYSTEM		ALL	4000

ZONES	ACCESS PANELS
211 421	

MECH	INSP	MPD ITEM NUMBER

OPERATIONALLY CHECK (AUDIBLE CHECK) THE ENGINE 2 CONTINUOUS IGNITION SYSTEM. N74-00-00-5C

1. Operational Test - Ignition System

A. References

(1) AMM 24-22-00/201, Electrical Power-Control

(2) AMM 71-00-00/201, Power Plant

B. Prepare for the Operational Test of the Ignition System

CAUTION: BEFORE YOU TEST THE IGNITION SYSTEM, DRY MOTOR THE ENGINE TO REMOVE ANY UNBURNED FUEL (AMM 71-00-00/201). UNBURNED FUEL MAY RESULT IN AN INTERNAL ENGINE FIRE OR TURBINE EXHAUST AREA FIRE. MAKE SURE N2 DOES NOT TURN WHEN YOU TEST THE IGNITION SYSTEM. IF N2 TURNS, FUEL CAN ENTER THE COMBUSTION CHAMBER WHEN THE FUEL CONTROL SWITCH IS PUT TO THE RUN POSITION. AN ACCIDENTAL ENGINE LIGHTUP COULD OCCUR.

(1) Dry motor the engine to clear the gas path of any remaining fuel (AMM 71-00-00/201).

NOTE: If you dry motored the engine immediately before and you know that there is no fuel in the engine, it is not necessary to dry motor the engine again.

(2) Do these steps to set the engine controls for the ignition test:

(a) Supply electrical power (AMM 24-22-00/201).

(b) Make sure the fuel control switch is in the RUN position.

BOEING PROPRIETARY - Copyright (C) - Unpublished Work - See title page for details.

MECH	INSP

(c) Make sure the engine start switch is in the OFF position.

(d) Make sure the engine start VALVE light is not on.

(e) Make sure the ENG VALVE light is on.

(f) Open these overhead panel P11 circuit breakers and attach the DO-NOT-CLOSE tags:

1) 11D7, STANDBY IGNITION 1

2) 11D8, STANDBY IGNITION 2

(g) For the left engine, open this overhead panel P11 circuit breaker and attach the DO-NOT-CLOSE tag:

1) 11D25, ENGINE FUEL CONT VLV & EEC CHAN B RST L

(h) For the right engine, open this overhead panel P11 circuit breaker and attach the DO-NOT-CLOSE tag:

1) 11D26, ENGINE FUEL CONT VLV & EEC CHAN B RST R

(i) For the left engine, make sure these overhead panel P11 circuit breakers are closed:

1) 11M1, L IGN 1

2) 11M9, LEFT ENG BUS POWER SENSE

3) 11M28, L IGN 2

(j) For the right engine, make sure these overhead panel P11 circuit breakers are closed:

1) 11M2, R IGN 1

2) 11M29, R IGN 2

3) 11M36, RIGHT ENG BUS POWER SENSE

C. Procedure

BOEING PROPRIETARY - Copyright (C) - Unpublished Work - See title page for details.

MECH	INSP

WARNING: YOU MUST BE VERY CAREFUL WHEN YOU WORK ON THE IGNITION SYSTEM. IGNITION VOLTAGE IS VERY DANGEROUS. DO NOT TOUCH THE IGNITER PLUGS, THE ENERGIZED PART OF THE IGNITION EXCITER, OR THE IGNITION WIRES WHEN THE IGNITION SYSTEM IS ENERGIZED. IF YOU DO NOT OBEY THIS INSTRUCTION, INJURIES TO PERSONS AND DAMAGE TO EQUIPMENT CAN OCCUR.

WARNING: DO NOT DO THE CHECK OF THE IGNITION SYSTEM IF THE AIRPLANE IS NOT IN A SAFE CONDITION AND A SAFE LOCATION. IF YOU DO NOT OBEY THIS INSTRUCTION, INJURIES TO PERSONS OR DAMAGE TO THE AIRPLANE OR EQUIPMENT CAN OCCUR.

(1) Do these steps to make sure the airplane is in a safe condition and a safe location to do the check:

(a) Make sure the airplane is not being fueled.

(b) Make sure the airplane is not in the hangar.

(c) Make sure there are no buildings, airplanes, equipment or persons in the jet-wake hazard area for the applicable engine(s) that will operate at ground idle (AMM 71-00-00/201).

(2) Do these steps to do a test of the ignition control system:

(a) Put the ignition select switch in the 1 position.

(b) Turn and hold the engine start switch in the CONT position.

1) Make sure the igniter plug fires.

2) When you hear the igniter plug fire, put the engine start switch in the OFF position.

(c) Put the ignition select switch in the 2 position.

(d) Turn and hold the engine start switch in the CONT position.

1) Make sure the igniter plug fires.

2) When you hear the igniter plug fire, put the engine start switch in the OFF position.

BOEING PROPRIETARY - Copyright (C) - Unpublished Work - See title page for details.

MECH	INSP

(3) Return the Aircraft to its Usual Condition.

(4) Move the Fuel Control Switch to the CUTOFF position.

(a) For the left engine, remove the DO-NOT-CLOSE tag and close this overhead panel P11 circuit breaker:

1) 11D25, ENGINE FUEL CONT VLV & EEC CHAN B RST L

(b) For the right engine, remove the DO-NOT-CLOSE tag and close this overhead panel P11 circuit breaker:

1) 11D26, ENGINE FUEL CONT VLV & EEC CHAN B RST R

(c) Remove the DO-NOT-CLOSE tags and close these overhead panel P11 circuit breakers:

1) 11D7, STANDBY IGNITION 1

2) 11D8, STANDBY IGNITION 2

(d) Remove electrical power if it is not necessary (AMM 24-22-00/201).

BOEING PROPRIETARY - Copyright (C) - Unpublished Work - See title page for details.

STATION		BOEING CARD NO.
TAIL NO.	SAS BOEING 767 TASK CARD	74-407-01-1
DATE		AIRLINE CARD NO.

SKILL	WORK AREA	RELATED TASK	INTERVAL	PHASE	MPD REV	TASK CARD REVISION
ENGIN	ENGINE 1		NOTE		013	NOV 10/96

TASK	TITLE	STRUCTURAL ILLUSTRATION REFERENCE	APPLICABILITY AIRPLANE	APPLICABILITY ENGINE
CHECK/INSP	ENGINE 1 IGNITOR PLUG TIP WEAR		ALL	NOTE

ZONES	ACCESS PANELS
411	417AL 418AR

MECH	INSP	MPD ITEM NUMBER
		N74-21-02-A

INSPECT THE ENGINE 1 IGNITOR PLUG TIPS FOR WEAR PER THE INSTRUCTIONS CONTAINED IN PRATT & WHITNEY SERVICE BULLETIN PW4ENG 72-152 PART 1.

INTERVAL NOTE: SB PW4ENG 72-152 (PRATT & WHITNEY). SERVICE BULLETIN RECOMMENDS THIS INSPECTION BE PERFORMED EVERY 350 FLIGHT HOURS.

ENGINE NOTE: SB PW4ENG 72-152 (PRATT & WHITNEY). APPLICABLE TO PRATT & WHITNEY PW4000 SERIES ENGINES THAT HAVE NOT INCORPORATED THE OUTER COMBUSTION CHAMBER ASSEMBLY MODIFICATIONS DETAILED IN PART 2 OF THIS SERVICE BULLETIN.

BOEING PROPRIETARY - Copyright (C) - Unpublished Work - See title page for details.

STATION		BOEING CARD NO.
TAIL NO.	SAS BOEING 767 TASK CARD	74-407-01-2
DATE		AIRLINE CARD NO.

SKILL	WORK AREA	RELATED TASK	INTERVAL	PHASE	MPD REV	TASK CARD REVISION
ENGIN	ENGINE 2		NOTE		013	NOV 10/96

TASK	TITLE	STRUCTURAL ILLUSTRATION REFERENCE	APPLICABILITY AIRPLANE	APPLICABILITY ENGINE
CHECK/INSP	ENGINE 2 IGNITOR PLUG TIP WEAR		ALL	NOTE

ZONES	ACCESS PANELS
421	427AL 428AR

MECH	INSP	MPD ITEM NUMBER
		N74-21-02-A

INSPECT THE ENGINE 2 IGNITOR PLUG TIPS FOR WEAR PER THE INSTRUCTIONS CONTAINED IN PRATT & WHITNEY SERVICE BULLETIN PW4ENG 72-152 PART 1.

INTERVAL NOTE: SB PW4ENG 72-152 (PRATT & WHITNEY). SERVICE BULLETIN RECOMMENDS THIS INSPECTION BE PERFORMED EVERY 350 FLIGHT HOURS.

ENGINE NOTE: SB PW4ENG 72-152 (PRATT & WHITNEY). APPLICABLE TO PRATT & WHITNEY PW4000 SERIES ENGINES THAT HAVE NOT INCORPORATED THE OUTER COMBUSTION CHAMBER ASSEMBLY MODIFICATIONS DETAILED IN PART 2 OF THIS SERVICE BULLETIN.

BOEING PROPRIETARY - Copyright (C) - Unpublished Work - See title page for details.