SYSTEMS, INC.

MAINTENANCE MANUAL

COM - 120B

COMMUNICATION SERVICE MONITOR

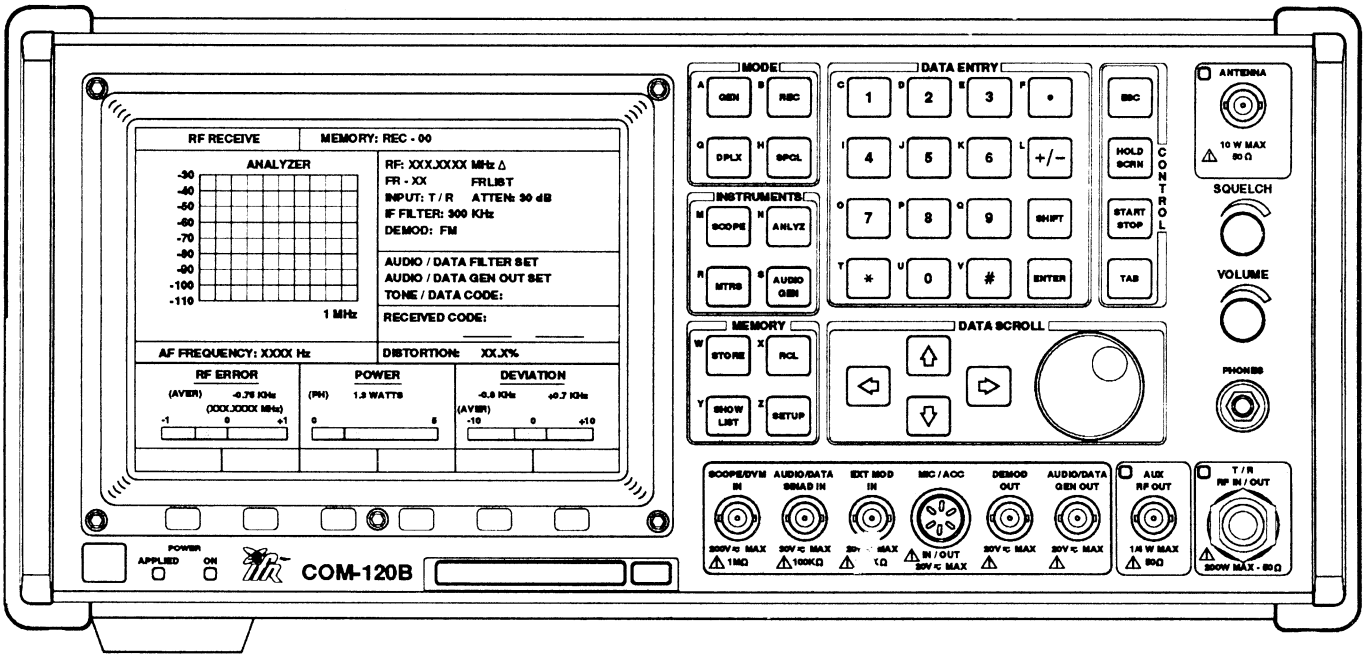

10200 West York Street / Wichita, Kansas 67215 U.S.A. / (316) 522-4981 / FAX (316) 524-2623

1002-0600-300

DIGITALY REMASTERED
OUT OF PRINT- MANUAL SCANS

By

Artek Media

18265 200th St.
Welch, MN 55089

www.artekmedia.com

"High resolution scans of obsolete technical manuals"

If your looking for a quality scanned technical manual in PDF format please visit our WEB site at www.artekmedia.com or drop us an email at manuals@artekmedia.com and we will be happy to email you a current list of the manuals we have available.

If you don't see the manual you need on the list drop us a line anyway we may still be able to point you to other sources. If you have an existing manual you would like scanned please write for details. This can often be done very reasonably in consideration for adding your manual to our library.

Typically the scans in our manuals are done as follows;

1) Typed text pages are typically scanned in black and white at 300 dpi.
2) Photo pages are typically scanned in gray scale mode at 600 dpi
3) Schematic diagram pages are typically scanned in black and white at 600 dpi unless the original manual had colored high lighting (as is the case for some 70's vintage Tektronix manuals).
4) Most manuals are text searchable
5) All manuals are fully bookmarked

All data is guaranteed for life (yours or mine … which ever is shorter). If for ANY REASON your file becomes corrupted, deleted or lost, Artek Media will replace the file for the price of shipping, or free via FTP download.

Thanks

Dave & Lynn Henderson
Artek Media

PUBLISHED BY
IFR SYSTEMS INC
WICHITA, KANSAS

COPYRIGHT © 1996 by IFR SYSTEMS, INC.

All rights reserved. Printed in the United States of America. No part of this publication may be reproduced, stored in a retrieval system, or transmitted in any form or by any means, electronic, mechanical, photocopying, recording or otherwise without the prior permission of the publisher.

TABLE OF CONTENTS

SECTION 1 - CALIBRATION

1-1 GENERAL

1-1-1 SAFETY PRECAUTIONS
1-1-2 ESD PRECAUTIONS

1-2 TEST EQUIPMENT REQUIREMENTS

1-3 DISASSEMBLY REQUIREMENTS

1-4 CALIBRATION ADJUSTMENTS

1-5 CONTROLS, CONNECTORS AND INDICATORS

1-6 COMPLETION OF CALIBRATION TEST PROCEDURES

1-7 CALIBRATION RECORD

1-8 CALIBRATION PROCEDURES

1-8-1 POWER SUPPLY CALIBRATION
1-8-2 TCXO/OCXO CALIBRATION
1-8-3 DVM CALIBRATION
1-8-4 GENERATOR OUTPUT LEVEL CALIBRATION
1-8-5 DISTORTION METER CALIBRATION
1-8-6 SINAD METER CALIBRATION
1-8-7 RF GENERATE FM DEVIATION CALIBRATION
1-8-8 RF GENERATE PM DEVIATION CALIBRATION
1-8-9 RF GENERATE AM MODULATION CALIBRATION
1-8-10 RF GENERATE EXTERNAL MODULATION CALIBRATION
1-8-11 SPECTRUM ANALYZER CALIBRATION
1-8-12 MIXER NULL CALIBRATION
1-8-13 FM DEVIATION METER CALIBRATION
1-8-14 PM DEVIATION METER CALIBRATION
1-8-15 AM MODULATION METER CALIBRATION
1-8-16 POWER METER CALIBRATION

SECTION 2 - PC BOARDS AND SCHEMATICS

PRODUCT STRUCTURE
INTERCONNECT DIAGRAM
COMPOSITE ASSEMBLY
CASE ASSEMBLY
LID ASSEMBLY
FRONT PANEL ASSEMBLY
KEYBOARD CONTROLLER ASSEMBLY
AUDIO BOARD ASSEMBLY
EL DISPLAY INTERFACE ASSEMBLY
ATTENUATOR CONTROL ASSEMBLY
POWER TERMINATION ASSEMBLY
GENERATOR OUTPUT ASSEMBLY
MOTHERBOARD ASSEMBLY
PCMCIA INTERFACE ASSEMBLY
VIDEO CNTR/FCTN GEN ASSEMBLY
CONTROLLER TRAY
SYNTHESIZER TRAY
1ST LO ASSEMBLY
2ND LO ASSEMBLY
3RD LO ASSEMBLY
BASE BAND ASSEMBLY
GENERATOR TRAY
AM FM MODULATOR ASSEMBLY
GEN CONVERTER ASSEMBLY
ANALYZER ASSEMBLY
POWER SUPPLY ASSEMBLY
REFERENCE FREQ. STD.
RECEIVER TRAY STD.
FRONT END BLOCK
IF AMP/DEMOD ASSEMBLY
RECEIVER TRAY OPT. 03
DIGITAL TRAY OPT. 04
AUXILIARY AMP OPT. 05
RECEIVER TRAY OPT. 08

Scans by ArtekMedia © 2008

SECTION 1 - CALIBRATION

1-1 GENERAL

This section contains calibration procedures for the following assemblies and systems:

PARA	TITLE	PAGE
1-8-1	POWER SUPPLY CALIBRATION	1-5
1-8-2	TCXO/OCXO CALIBRATION	1-7
1-8-3	DVM CALIBRATION	1-9
1-8-4	GENERATOR OUTPUT LEVEL CALIBRATION	1-11
1-8-5	DISTORTION METER CALIBRATION	1-14
1-8-6	SINAD METER CALIBRATION	1-16
1-8-7	RF GENERATE FM DEVIATION CALIBRATION	1-18
1-8-8	RF GENERATE PM DEVIATION CALIBRATION	1-21
1-8-9	RF GENERATE AM MODULATION CALIBRATION	1-23
1-8-10	RF GENERATE EXTERNAL MODULATION CALIBRATION	1-25
1-8-11	SPECTRUM ANALYZER CALIBRATION	1-29
1-8-12	MIXER NULL CALIBRATION	1-36
1-8-13	FM DEVIATION METER CALIBRATION	1-38
1-8-14	PM DEVIATION METER CALIBRATION	1-41
1-8-15	AM MODULATION METER CALIBRATION	1-43
1-8-16	POWER METER CALIBRATION	1-45

These procedures should be performed as a result of one or more of the following conditions:

- If, during the course of normal operation, the COM-120B or any major function thereof fails to meet the performance specifications.
- If a module is found to be defective and requires replacement.
- If the recommended 12 month calibration interval is due.

Figure 1-1 lists the calibration procedures required based on the replacement of a specific module. All procedures must be performed for the annual calibration.

1-1-1 SAFETY PRECAUTIONS

As with any piece of electronic equipment, extreme caution should be taken when working with "live" circuits. When performing the calibration procedures in this section, be sure to observe the following precautions:

WARNING: REMOVE ALL JEWELRY BEFORE PERFORMING ANY CALIBRATION PROCEDURES INVOLVING LIVE CIRCUITS.

HEED ALL WARNINGS AND CAUTIONS CONCERNING MAXIMUM VOLTAGES AND POWER INPUTS.

1-1-2 ESD PRECAUTIONS

CAUTION: THESE CALIBRATION PROCEDURES SHOULD ONLY BE PERFORMED IN AN ESD ENVIRONMENT AND ALL PERSONNEL PERFORMING THIE PROCEDURES SHOULD KNOW ACCEPTED ESD PRACTICES OR BE ESD CERTIFIED.

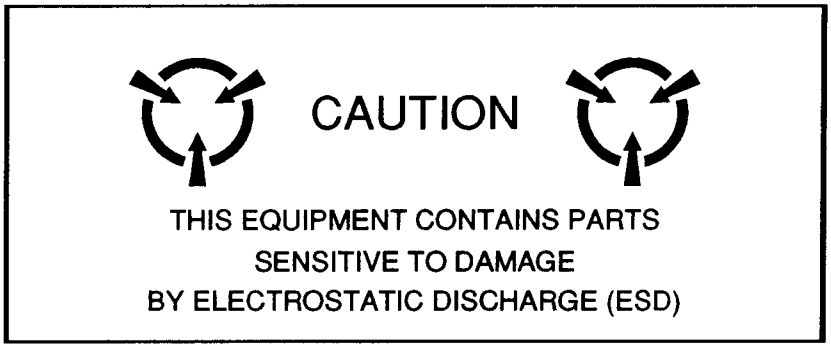

1-2 TEST EQUIPMENT REQUIREMENTS

Table 1-1 contains a comprehensive list of test equipment suitable for performing any of the procedures listed in this manual. Any other equipment meeting the specifications listed in Table 1-1 may be substituted in place of the recommended models.

NOTE: For certain procedures contained in this manual, the equipment listed in Appendix A may exceed the minimum required specifications.

1-3 DISASSEMBLY REQUIREMENTS

To perform the calibration procedures, the case assembly must be removed.

1-4 CALIBRATION ADJUSTMENTS

Before making adjustments, always observe the measurement. If the measurement is within the tolerances given, do not proceed with the adjustment. When an adjustment is required, attempt to obtain a precise measurement, instead of just within tolerance.

1-5 CONTROLS, CONNECTORS AND INDICATORS

The front and rear panel controls, connectors and indicators specified in the calibration procedures are followed by an item number. Refer to Figures 3-1 and 3-2 in the COM-120B Operation Manual for the location of these items.

1-6 COMPLETION OF CALIBRATION TEST PROCEDURES

Upon completion of a specific calibration procedure, the calibration procedure may be terminated. Control settings, operating commands and test equipment do not carry over from one procedure to another and are not assumed at the beginning of a procedure.

1-7 CALIBRATION RECORD

A Calibration Record is provided for recording the results obtained while performing the Calibration Procedures. It is recommended the technician reproduce the Calibration Record, rather than use the copy in this manual.

Scans by ArtekMedia © 2008

Scans by ArtekMedia © 2008

Type	Model	Specifications
Digital Multimeter (DMM)	HP34401A or equivalent	
Calibrator	Fluke 5100B or equivalent	
Audio Analyzer	HP8903B or equivalent	Frequency Range: 20 Hz to 20 kHz Accuracy ±0.1 dB
Frequency Counter	Phillips PM6669 or equivalent	Frequency: 10 Hz to 1.3 GHz Resolution: ≥7 digits
Measuring Receiver	HP8902A (opt. 30, 32, 37) or equivalent	RF Power: -20 to +30 dBm RF Power Range: .1 to 1 GHz RF Level: Tuned 0 to -127 dBm RF Power Accuracy: ±0.1 dB
Measuring Receiver Sensor	HP11722A or equivalent	
Modulation Analyzer	HP8901A or equivalent	FM Meter Range: 20 Hz to 200 kHz FM Meter Accuracy: ±1% ±1 digit Phase Meter Range: to 200 Radians Phase Meter Accuracy: ±3% ±1 digit
10 MHz Standard		Accuracy: $\pm 2 \times 10^{-9}$ (Traceable to NIST)
COM-120 Maintenance Kit	P/N 7001-8743-800	
Signal Generator	HP8657A or equivalent	
10 W RF Amplifier	Amplifier Research 10W1000 or equivalent	Gain: 40 dB Nominal Bandwidth: 1 MHz to 1 GHz
200 W RF Amplifier	ENI 5100L or equivalent	Gain: 50 dB Nominal Bandwidth: 1.5 to 150 MHz

Table 1-1 Test Equipment Requirements

IF THIS ASSEMBLY IS REPAIRED OR REPLACED ↓ / THE FOLLOWING CALIBRATION PROCEDURES MUST BE PERFORMED →	POWER SUPPLY CALIBRATION 1-8-1	TCXO/OCXO CALIBRATION 1-8-2	DVM CALIBRATION 1-8-3	GENERATOR OUTPUT LEVEL CALIBRATION 1-8-4	DISTORTION METER CALIBRATION 1-8-5	SINAD METER CALIBRATION 1-8-6	RF GENERATE FM DEVIATION CALIBRATION 1-8-7	RF GENERATE PM DEVIATION CALIBRATION 1-8-8	RF GENERATE AM MODULATION CALIBRATION 1-8-9	RF GENERATE EXT MODULATION CALIBRATION 1-8-10	SPECTRUM ANALYZER CALIBRATION 1-8-11	MIXER NULL CALIBRATION 1-8-12	FM DEVIATION METER CALIBRATION 1-8-13	PM DEVIATION METER CALIBRATION 1-8-14	AM MODULATION METER CALIBRATION 1-8-15	POWER METER CALIBRATION 1-8-16
MOTHERBOARD PC BOARD ASSEMBLY																
ATTENUATOR CONTROL PC BOARD ASSEMBLY																
FRONT PANEL ASSEMBLY																
DIGITAL TRAY											●					
CONTROLLER TRAY																
ANALYZER TRAY											●	●				
RECEIVER TRAY													●	●	●	
SYNTHESIZER TRAY		●		●	●	●	●	●	●	●	●	●	●	●	●	
GENERATOR TRAY				●			●	●	●	●						
POWER TERMINATION ASSEMBLY																●
GENERATOR OUTPUT ASSEMBLY				●			●	●	●	●						
CONVERTER ASSEMBLY				●			●	●	●	●						
REFERENCE FREQUENCY ASSEMBLY		●														
FAN ASSEMBLY																
POWER SUPPLY ASSEMBLY	●	●	●	●	●	●	●	●	●	●	●	●	●	●	●	●

8702001

Figure 1-1 Module Replacement and Calibration Requirements

Scans by ArtekMedia © 2008

Scans by ArtekMedia © 2008

1-8 CALIBRATION PROCEDURES

1-8-1 POWER SUPPLY CALIBRATION

PREREQUISITES: NONE

EQUIPMENT REQUIRED: 1 DIGITAL MULTIMETER (DMM)

FIGURES: 1-2

STEP PROCEDURE

1. Apply Power to COM-120B. Allow 30 minute warm-up period.

2. Verify Voltages at Motherboard Connector 87A6J10 per Table 1-2 using DMM. Refer to Figure 1-2 for pin locations. Use Chassis for ground.

Supply	Voltage	Location
+13 V	+13 Vdc (±0.25 V)	87A6J10 PIN 1,13
+35 V	+35 Vdc (±1 V)	87A6J10 PIN 2,14
-10.5 V	-10.5 Vdc (±0.5 V)	87A6J10 PIN 3,15
+10.5 V	+10.5 Vdc (±0.25 V)	87A6J10 PIN 4,16
+5 V Analog	+5 Vdc (+0.2 V/-0.0 V)	87A6J10 PIN 5,17
+5 V Digital	+5 Vdc (+0.2 V/-0.0 V)	87A6J10 PIN 7,19
+12 V EL	+12 Vdc (±0.25 V)	87A6J10 PIN 9,21

Table 1-2 Power Supply Voltages and Locations

3. Set COM-120B to OFF and disconnect test equipment.

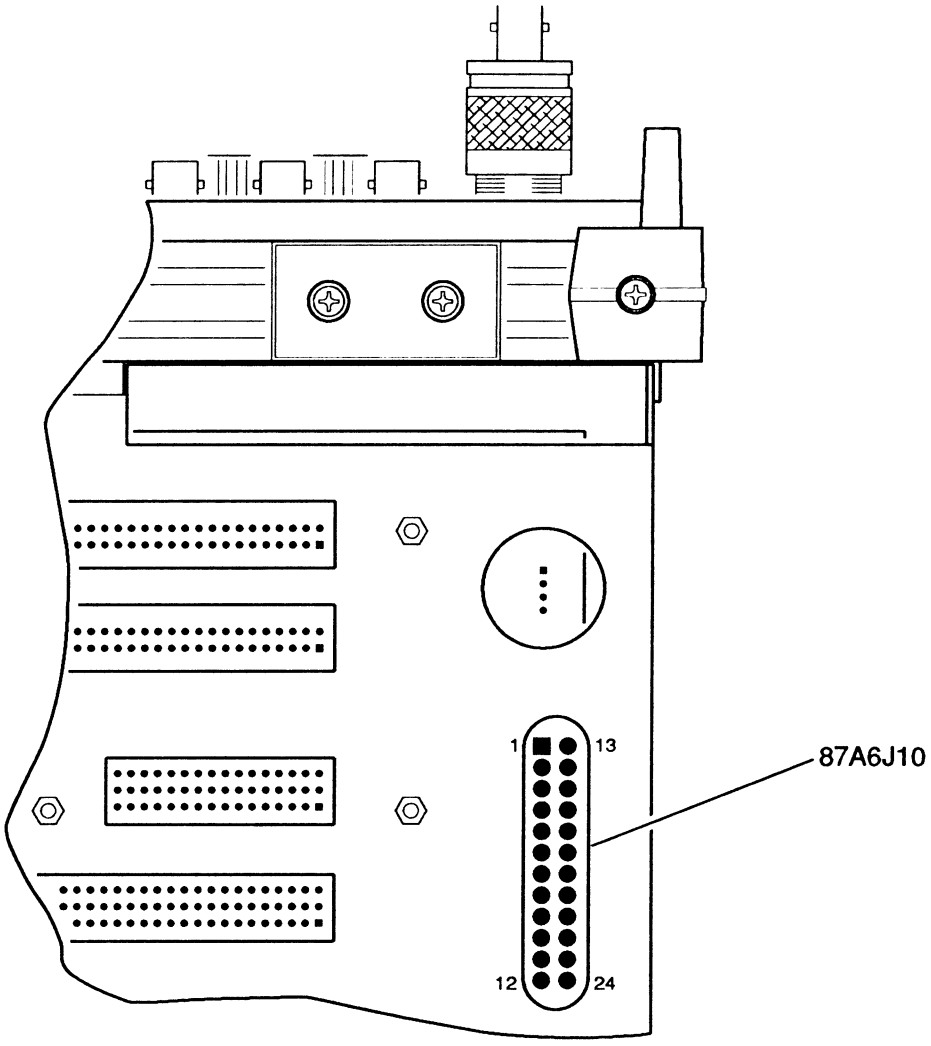

Figure 1-2 Power Supply Voltage Locations (87A6J10)

Scans by ArtekMedia © 2008

Scans by ArtekMedia © 2008

1-8-2 TCXO/OCXO CALIBRATION

PREREQUISITES:	1-8-1	POWER SUPPLY CALIBRATION
EQUIPMENT REQUIRED:	1	FREQUENCY COUNTER
FIGURES:	1-3	

STEP PROCEDURE

1. Apply Power to COM-120B. Allow 5 minute warm-up period.
2. Connect Frequency Counter to AUX RF OUT Connector (13).
3. Press GEN Test Mode Key (3) to access RF Generate Operation Screen.
4. Set RF Field to ***998.0000 MHz***.
5. Set Output to ***AUX*** and Output Level to ***-13 dBm***.
6. Set all Modulation Sources to OFF.
7. If OCXO is installed, go to Step 10.
8. Verify Frequency Counter reads 998.0000 (±199.6 Hz). Adjust 87A16A1R1 as required (Figure 1-3).
9. Set COM-120B Power to OFF and disconnect test equipment.
10. If OCXO is installed, verify Frequency Counter reads 998.0000 (±10 Hz). If not, go to Step 12.
11. Set COM-120B Power to OFF and disconnect test equipment.
12. Remove Protected Screw from OCXO to access adjustment. Adjust OCXO until Frequency Counter reads 998.0000 (±10 Hz).
13. Replace Protected Screw, set COM-120B Power to OFF and disconnect test equipment.

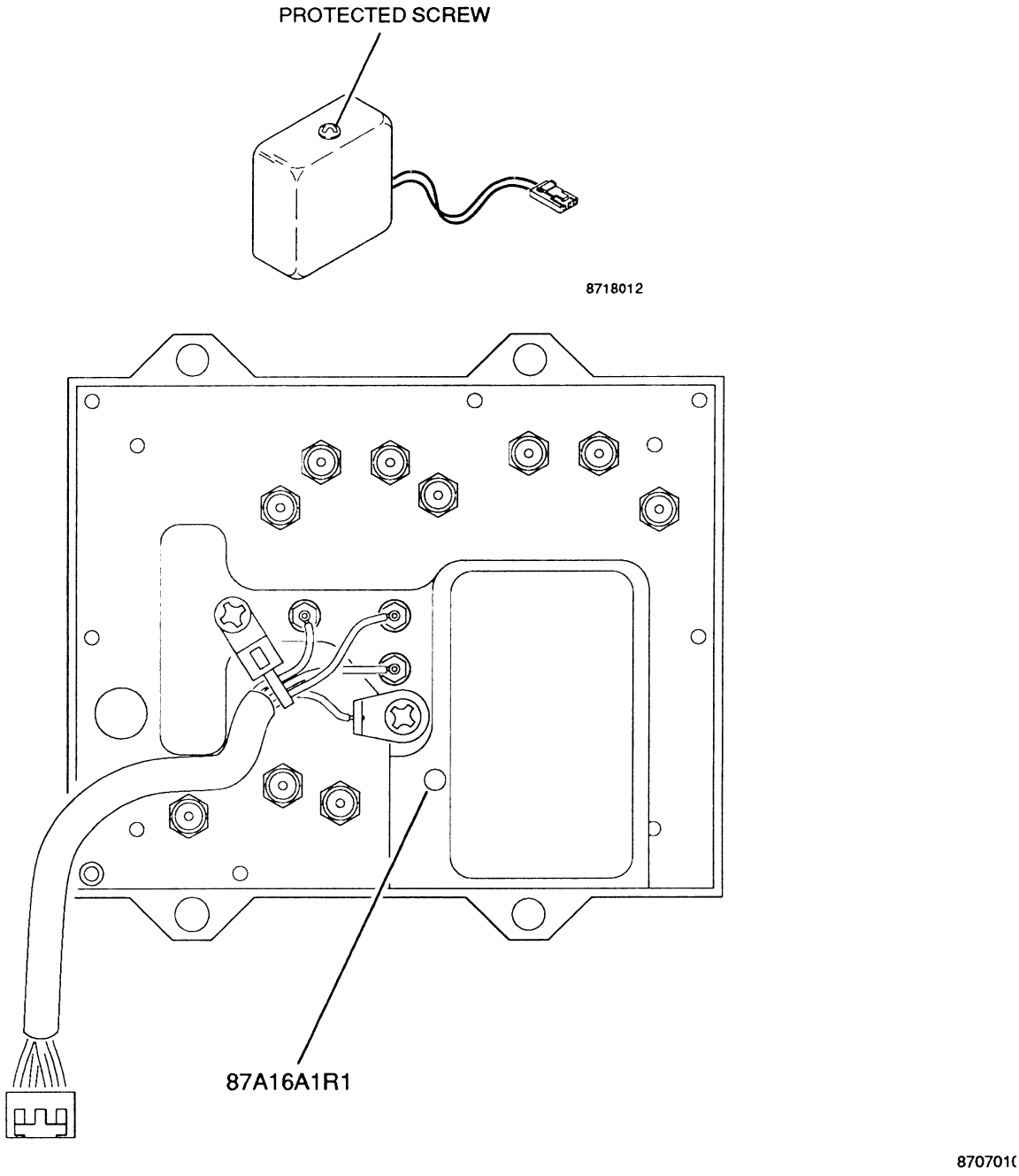

Figure 1-3 TCXO/OCXO Adjustments

Scans by ArtekMedia © 2008

Scans by ArtekMedia © 2008

1-8-3 DVM CALIBRATION

PREREQUISITES: 1-8-1 POWER SUPPLY CALIBRATION

EQUIPMENT REQUIRED: 1 CALIBRATOR

FIGURES: NONE

STEP PROCEDURE

1. Apply Power to COM-120B. Allow 5 minute warm-up period.
2. Connect Calibrator to SCOPE/DVM Connector (20).
3. Press MTRS Instruments Key (4).
4. Select "3. DVM" on Meters Menu.
5. Set Peak Hold to ***OFF***.
6. Set Average to ***OFF***.
7. Set Source to ***SC/DVM AC***.
8. Set Meter Reading Units to ***Vrms***.
9. Set Range as shown in Table 1-3. For each Range setting, set Calibrator for stated input. Verify Meter Reading matches input within specified tolerance. If not, go to Step 13.

Range	Calibrator Input	Frequency	Reading Tolerance
200 V	190 Vrms	50 Hz	±10.1 V
20 V	19 Vrms	1 kHz	±1.02 V
2 V	1.9 Vrms	20 kHz	±106 mV

Table 1-3 SC/DVM AC Range Settings

10. Set Source to ***SC/DVM DC***.
11. Set Range as shown in Table 1-4. For each Range setting, set Calibrator for stated input. Verify Meter Reading matches input within specified tolerance. If not, go to Step 13.

Range	Calibrator Input	Reading Tolerance
200 V	190 Vdc	±10.1 V
20 V	19 Vdc	±1.02 V
2 V	1.9 Vdc	±106 mV

Table 1-4 SC/DVM DC Range Settings

12. Set COM-120B to OFF and disconnect test equipment.

PERFORM THE FOLLOWING ONLY WHEN REQUIRED.

13. Press SETUP MEMORY Key (21).
14. Select "1. Calibration" from Setup Screen.
15. Press ENTER Key to access Password Field. Press SHIFT, F, M, Y, S, V, C, D and SHIFT Data Entry Keys (5). Press ENTER Key.
16. Select "1. DVM" to access DVM METER CALIBRATION Screen.
17. Move cursor to AC RANGE X1.
18. Set Calibrator to 1.000 Vrms at 60 Hz.
19. Press ENTER Key twice and wait until current Field displays ***CALIBRATED***.
20. Move cursor to AC RANGE X10.
21. Set Calibrator to 10.00 Vrms at 60 Hz.
22. Press ENTER Key twice and wait until current Field displays ***CALIBRATED***.
23. Move cursor to AC RANGE X100.
24. Set Calibrator to 100.0 Vrms at 60 Hz.
25. Press ENTER Key twice and wait until current Field displays ***CALIBRATED***.
26. Move cursor to DC RANGE X1.
27. Set Calibrator to 2.000 Vdc.
28. Press ENTER Key twice and wait until current Field displays ***CALIBRATED***.
29. Press RETURN Soft Function Key F6.
30. Press MTRS Instruments Key (4).
31. Select "3. DVM" on Meters Menu.
32. Proceed at Step 7.

Scans by ArtekMedia © 2008

Scans by ArtekMedia © 2008

1-8-4 GENERATOR OUTPUT LEVEL CALIBRATION

PREREQUISITES: 1-8-1 POWER SUPPLY CALIBRATION

EQUIPMENT REQUIRED: 1 MEASURING RECEIVER

FIGURES: NONE

STEP PROCEDURE

1. Apply Power to COM-120B. Allow 5 minute warm-up period.
2. Press GEN Test Mode Key (3) to access RF Generate Operation Screen.
3. Set RF Field to 405.5000 MHz.
4. Set all Modulation Sources to OFF.
5. Set Output to ***T/R*** and connect Measuring Receiver to T/R Connector. Set Measuring Receiver for Automatic Tuning and Tuned RF Level Measurement.
6. Set Output Level to ***-20 dBm***. Verify Measuring Receiver reads -20 dBm (±2 dB). If not, go to Step 14.
7. Set Output Level to ***-90 dBm***. Verify Measuring Receiver reads -90 dBm (±2 dB). If not, go to Step 14.
8. Set Output Level to ***-130 dBm***. Verify Measuring Receiver reads -130 dBm (±2.5 dB). If not, go to Step 14.
9. Set Output to ***AUX*** and connect Measuring Receiver to AUX RF OUT Connector (13).
10. Set Output Level to ***-20 dBm***. Verify Measuring Receiver reads -20 dBm (±2 dB). If not, go to Step 14.
11. Set Output Level to ***-90 dBm***. Verify Measuring Receiver reads -90 dBm (±2 dB). If not, go to Step 14.
12. Set Output Level to ***-130 dBm***. Verify Measuring Receiver reads -130 dBm (±2.5 dB). If not, go to Step 14.
13. Set COM-120B to OFF and disconnect test equipment.

PERFORM THE FOLLOWING ONLY WHEN REQUIRED.

14. Press SETUP MEMORY Key (21).
15. Select "1. Calibration" from Setup Screen.
16. Press ENTER Key to access Password Field. Press SHIFT, F, M, Y, S, V, C, D and SHIFT Data Entry Keys (5). Press ENTER Key.
17. Select "6. RF GENERATOR - OUTPUT LEVEL" to access RF GENERATOR LEVEL CALIBRATION Screen.

STEP	PROCEDURE

18. Press LEVEL Soft Function Key F2, if displayed.

19. Connect Measuring Receiver to T/R Connector.

20. Move cursor to -20 dBm Field. Press ENTER Key to access Data Field.

21. Edit Data Field using DATA SCROLL Keys (17) for Measuring Receiver reading closest to -20 dBm.

22. Press ENTER Key and wait until -20 dBm Field displays ***CALIBRATED***.

23. Move cursor to -22 dBm Field. Press ENTER Key to access Data Field.

24. Edit Data Field using DATA SCROLL Keys (17) for Measuring Receiver reading closest to -22 dBm.

25. Press ENTER Key and wait until -22 dBm Field displays ***CALIBRATED***.

26. Move cursor to -24 dBm Field. Press ENTER Key to access Data Field.

27. Edit Data Field using DATA SCROLL Keys (17) for Measuring Receiver reading closest to -24 dBm.

28. Press ENTER Key and wait until -24 dBm Field displays ***CALIBRATED***.

29. Move cursor to -26 dBm Field. Press ENTER Key to access Data Field.

30. Edit Data Field using DATA SCROLL Keys (17) for Measuring Receiver reading closest to -26 dBm.

31. Press ENTER Key and wait until -26 dBm Field displays ***CALIBRATED***.

32. Move cursor to -28 dBm Field. Press ENTER Key to access Data Field.

33. Edit Data Field using DATA SCROLL Keys (17) for Measuring Receiver reading closest to -28 dBm.

34. Press ENTER Key and wait until -28 dBm Field displays ***CALIBRATED***.

35. Move cursor to -29.9 dBm Field. Press ENTER Key to access Data Field.

36. Edit Data Field using DATA SCROLL Keys (17) for Measuring Receiver reading closest to -29.9 dBm.

37. Press ENTER Key and wait until -29.9 dBm Field displays ***CALIBRATED***.

38. Press T/R Soft Function Key F3. Set Measuring Receiver for RF Power Measurement.

Scans by ArtekMedia © 2008

Scans by ArtekMedia © 2008

STEP	PROCEDURE

39. Access each Data Field for frequencies 0.2500 to 999.9999 MHz. For each Data Field, perform following:

    - Press ENTER Key to access Data Field.
    - Edit Data Field using DATA SCROLL Keys (17) for Measuring Receiver reading closest to -20 dBm.
    - Press ENTER Key and wait until current Field displays ***CALIBRATED***.
    - Continue with next Field.

40. Press AUX Soft Function Key F4.

41. Connect Measuring Receiver to AUX RF OUT Connector (13).

42. Access each Data Field for frequencies 0.2500 to 999.9999 MHz. For each Data Field, perform following:

    - Press ENTER Key to access Data Field.
    - Edit Data Field using DATA SCROLL Keys (17) for Measuring Receiver reading closest to -13 dBm.
    - Press ENTER Key and wait until current Field displays ***CALIBRATED***.
    - Continue with next Field.

43. If Optional Amplifier is installed, press AUX AMP Soft Function Key F5.

44. Access each Data Field for frequencies 0.2500 to 999.9999 MHz. For each Data Field, perform following:

    - Press ENTER Key to access Data Field.
    - Edit Data Field using DATA SCROLL Keys (17) for Measuring Receiver reading closest to 0.0 dBm.
    - Press ENTER Key and wait until current Field displays ***CALIBRATED***.
    - Continue with next Field.

45. Press RETURN Soft Function Key F6.

46. Press GEN Test Mode Key (3).

47. Continue at Step 2.

1-8-5 DISTORTION METER CALIBRATION

PREREQUISITES: 1-8-1 POWER SUPPLY CALIBRATION

EQUIPMENT REQUIRED: 1 AUDIO ANALYZER

FIGURES: 1-4

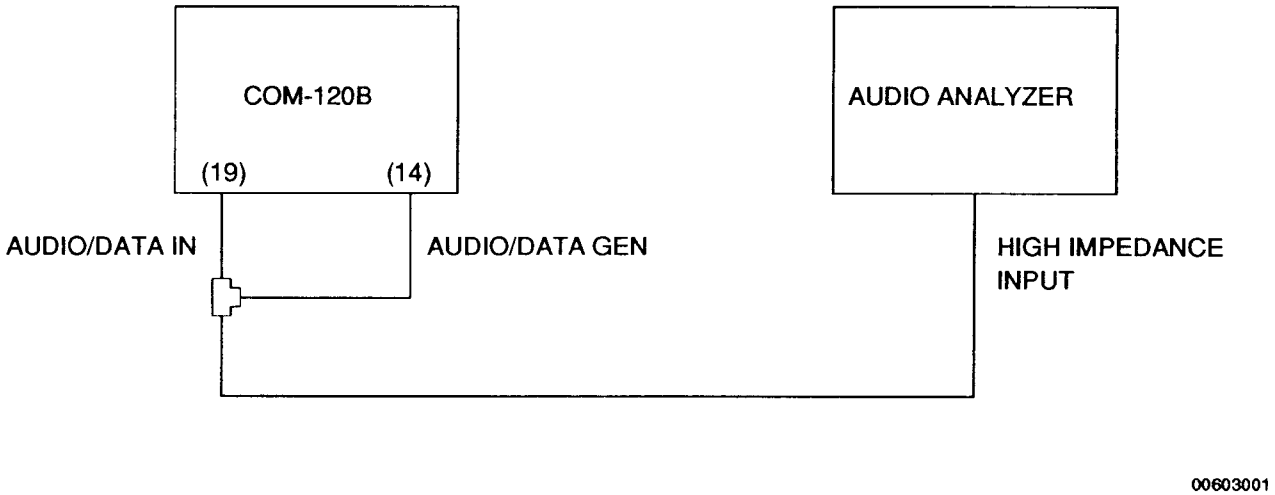

Figure 1-4 Distortion/SINAD Meter Test Equipment Setup

STEP	PROCEDURE

1. Apply Power to COM-120B. Allow 5 minute warm-up period.
2. Connect Test Equipment as shown in Figure 1-4.
3. Press AUDIO GEN Instruments Key (4).
4. Set Audio Generator 2 to ***ON***.
5. If Optional Audio Generator 2 is installed, set Tone Frequency for ***1000.0 Hz*** and Shape to ***SINE***.
6. Set Audio Generator 2 Level for ***1.41 Vp***.
7. Set Audio Generator 1 to ***ON***.
8. Set Audio Generator 1 Format to ***TONE***.
9. Set Audio Generator 1 Tone Frequency to ***2800.0 Hz***.
10. Set Audio Generator 1 Shape to ***SINE***.
11. Set Audio Generator 1 Level to ***0.14 Vp***.
12. Set Audio Generator 1 Mode to ***CONT***.

Scans by ArtekMedia © 2008

Scans by ArtekMedia © 2008

STEP	PROCEDURE

13. Set Audio Analyzer to measure Distortion with all filters off.
14. Verify Audio Analyzer reads approximately 10% Distortion.
15. Press MTRS Instruments Key (4).
16. Select Distortion Meter Operation.
17. Set Distortion Meter Source to ***AUDIO/DATA-IN***.
18. Set Peak Hold to ***OFF***.
19. Set Average to ***OFF***.
20. Set Low-Pass Filter to ***20 kHz***.
21. Verify Distortion Meter Reading matches Audio Analyzer (±0.6%). If not, go to Step 23.
22. Set COM-120B Power to OFF and disconnect test equipment.

PERFORM THE FOLLOWING ONLY WHEN REQUIRED.

23. Set Audio Generator 2 for ***1.41 Vp***.
24. Set Audio Generator 1 for ***0.14 Vp***.
25. Press SETUP MEMORY Key (21).
26. Select "1. Calibration" from Setup Screen.
27. Press ENTER Key to access Password Field. Press SHIFT, F, M, Y, S, V, C, D and SHIFT Data Entry Keys (5). Press ENTER Key.
28. Select "2. DISTORTION METER" to access DISTORTION METER CALIBRATION Screen.
29. Enter Audio Analyzer Reading using DATA ENTRY Keys (5). Press ENTER Key.
30. Go to Step 15.

1-8-6 SINAD METER CALIBRATION

PREREQUISITES: 1-8-1 POWER SUPPLY CALIBRATION

EQUIPMENT REQUIRED: 1 AUDIO ANALYZER

FIGURES: 1-4

STEP PROCEDURE

1. Apply Power to COM-120B. Allow 5 minute warm-up period.
2. Connect Test Equipment as shown in Figure 1-4.
3. Press AUDIO GEN Instruments Key (4).
4. Set Audio Generator 2 to ***ON***.
5. If Optional Audio Generator 2 is installed, set Tone Frequency for ***1000.0 Hz*** and Shape to ***SINE***.
6. Set Audio Generator 2 Level for ***1.41 Vp***.
7. Set Audio Generator 1 to ***ON***.
8. Set Audio Generator 1 Format to ***TONE***.
9. Set Audio Generator 1 Tone Frequency to ***2800.0 Hz***.
10. Set Audio Generator 1 Shape to ***SINE***.
11. Set Audio Generator 1 Level to ***0.14 Vp***.
12. Set Audio Generator 1 Mode to ***CONT***.
13. Set Audio Analyzer to measure SINAD with filters off.
14. Verify Audio Analyzer reads approximately 20 dB SINAD.
15. Press MTRS Instruments Key (4).
16. Select SINAD Meter Operation.
17. Set SINAD Meter Source to ***AUDIO/DATA-IN***.
18. Set Peak Hold to ***OFF***.
19. Set Average to ***OFF***.
20. Set Low-Pass Filter to ***20 kHz***.
21. Verify SINAD Meter Reading matches Audio Analyzer (±1.1 dB). If not, go to Step 23.
22. Set COM-120B Power to OFF and disconnect test equipment.

Scans by ArtekMedia © 2008

Scans by ArtekMedia © 2008

STEP	PROCEDURE

PERFORM THE FOLLOWING ONLY WHEN REQUIRED.

23. Set Audio Generator 2 for ***1.41 Vp***.

24. Set Audio Generator 1 for ***0.14 Vp***.

25. Press SETUP MEMORY Key (21).

26. Select "1. Calibration" from Setup Screen.

27. Press ENTER Key to access Password Field. Press SHIFT, F, M, Y, S, V, C, D and SHIFT Data Entry Keys (5). Press ENTER Key.

28. Select "3. SINAD METER" to access SINAD METER CALIBRATION Screen.

29. Enter Audio Analyzer Reading using Data Entry Keys (5). Press ENTER Key.

30. Go to Step 15.

1-8-7 RF GENERATE FM DEVIATION CALIBRATION

PREREQUISITES: 1-8-1 POWER SUPPLY CALIBRATION

EQUIPMENT REQUIRED: 1 MODULATION ANALYZER

FIGURES: NONE

STEP	PROCEDURE

1. Apply Power to COM-120B. Allow 5 minute warm-up period.
2. Connect T/R Connector (12) to Modulation Analyzer Input.
3. Press GEN Test Mode Key (3) to access RF Generate Operation Screen.
4. Set RF Field to ***101.0000 MHz***.
5. Set Output to ***T/R*** and Output Level to ***-20.0 dBm***.
6. Set All Modulation Sources to OFF.
7. Set Modulation Analyzer to 101 MHz RF. Set Modulation Analyzer for 3 kHz Low-Pass Filter, Peak+ and FM Measurement. Record Residual on Modulation Analyzer.
8. Set GEN1 Modulation Type for ***FM***.
9. Set Deviation for ***10.0 kHz***.
10. Set Format for ***TONE***. With Cursor on Format, press CONT Soft Function Key F2.
11. Set Tone Freq for ***10.0 Hz***.
12. Set Shape to ***SINE***.
13. Verify Modulation Analyzer reads 10 kHz Deviation (±600 Hz + residual [Step 7]). If not, go to Step 45.
14. Engage 300 Hz High-Pass Filter on Modulation Analyzer.
15. Set GEN1 Modulation Type to ***OFF***. Record Residual on Modulation Analyzer.
16. Set GEN1 Modulation Type to ***FM***.
17. Set Tone Freq to ***1000.0 Hz***.
18. Verify Modulation Analyzer reads 10 kHz Deviation (±600 Hz + residual [Step 15]). If not, go to Step 45.
19. Set Modulation Analyzer Low-Pass Filter to 20 kHz.
20. Set GEN1 Modulation Type to ***OFF***. Record Residual on Modulation Analyzer.
21. Set GEN1 Modulation Type to ***FM***.

Scans by ArtekMedia © 2008

Scans by ArtekMedia © 2008

STEP	PROCEDURE

22. Set Tone Freq to ***10000.0 Hz***.

23. Verify Modulation Analyzer reads 10 kHz Deviation (±600 Hz + residual [Step 20]). If not, go to Step 45.

24. Set Tone Freq to ***15000.0 Hz***.

25. Verify Modulation Analyzer reads 10 kHz Deviation (±600 Hz + residual [Step 20]). If not, go to Step 45.

26. Set Modulation Analyzer High-Pass Filter to NONE and Low-Pass Filter to 3 kHz.

27. Set GEN1 Modulation Type to ***OFF***. Record Residual on Modulation Analyzer.

28. Set GEN1 Modulation Type to ***FM***.

29. Set Tone Freq to ***10.0 Hz***.

30. Set Deviation for ***100.0 kHz***.

31. Verify Modulation Analyzer reads 100 kHz Deviation (±5.5 kHz + residual [Step 27]). If not, go to Step 45.

32. Set Modulation Analyzer High-Pass Filter to 300 Hz.

33. Set GEN1 Modulation Type to ***OFF***. Record Residual on Modulation Analyzer.

34. Set GEN1 Modulation Type to ***FM***.

35. Set Tone Freq to ***1000.0 Hz***.

36. Verify Modulation Analyzer reads 100 kHz Deviation (±5.5 kHz + residual [Step 33]). If not, go to Step 45.

37. Set Modulation Analyzer Low-Pass Filter to 20 kHz.

38. Set GEN1 Modulation Type to ***OFF***. Record Residual on Modulation Analyzer.

39. Set GEN1 Modulation Type to ***FM***.

40. Set Tone Freq to ***10 kHz***.

41. Verify Modulation Analyzer reads 100 kHz Deviation (±5.5 kHz + residual [Step 38]). If not, go to Step 45.

42. Set Tone Freq to ***15000.0 Hz***.

43. Verify Modulation Analyzer reads 100 kHz Deviation (±5.5 kHz + residual [Step 38]). If not, go to Step 45.

44. Set COM-120B power to OFF and disconnect test equipment.

PERFORM THE FOLLOWING ONLY WHEN REQUIRED.

45. Set Modulation Analyzer for 300 Hz High-Pass Filter and 3 kHz Low-Pass Filter.

46. Press SETUP MEMORY Key (21).

47. Select "1. Calibration" from Setup Screen.

48. Press ENTER Key to access Password Field. Press SHIFT, F, M, Y, S, V, C, D and SHIFT Data Entry Keys (5). Press ENTER Key.

49. Select "7. RF GENERATOR - FM DEVIATION" to access RF GENERATOR - FM DEVIATION CALIBRATION Screen.

50. With cursor on "FM DEVIATION 50 kHz," press ENTER Key.

51. Edit Data Field using DATA SCROLL Keys (17) for Modulation Analyzer reading closest to 50 kHz Deviation.

52. Press ENTER Key and wait until Field displays ***CALIBRATED***.

53. With cursor on "FM DEVIATION 15 kHz," press ENTER Key.

54. Edit Data Field using DATA SCROLL Keys (17) for Modulation Analyzer reading closest to 15 kHz Deviation.

55. Press ENTER Key and wait until Field displays ***CALIBRATED***.

56. With cursor on "FM DEVIATION 10 kHz," press ENTER Key.

57. Edit Data Field using DATA SCROLL Keys (17) for Modulation Analyzer reading closest to 10 kHz Deviation.

58. Press ENTER Key and wait until Field displays ***CALIBRATED***.

59. With cursor on "FM DEVIATION 1 kHz," press ENTER Key.

60. Edit Data Field using DATA SCROLL Keys (17) for Modulation Analyzer reading closest to 1 kHz Deviation.

61. Press ENTER Key and wait until Field displays ***CALIBRATED***.

62. Repeat steps 50 through 61 then go to Step 63.

63. Press RETURN Soft Function Key F6 to return to Calibration Screen. Go to Step 3.

Scans by ArtekMedia © 2008

Scans by ArtekMedia © 2008

1-8-8 RF GENERATE PM DEVIATION CALIBRATION

PREREQUISITES: 1-8-1 POWER SUPPLY CALIBRATION

EQUIPMENT REQUIRED: 1 MODULATION ANALYZER

FIGURES: NONE

STEP PROCEDURE

1. Apply Power to COM-120B. Allow 5 minute warm-up period.
2. Connect T/R Connector (12) to Modulation Analyzer Input.
3. Press GEN Test Mode Key (3) to access RF Generate Operation Screen.
4. Set RF Field to ***101.0000 MHz***.
5. Set Output to ***T/R*** and Output Level to ***-20.0 dBm***.
6. Set All Modulation Sources to OFF.
7. Set Modulation Analyzer for 101 MHz RF. Set Modulation Analyzer for 20 kHz Low-Pass Filter, 300 Hz High-Pass Filter, Peak+ and PM Measurement. Record Residual on Modulation Analyzer.
8. Set GEN1 Modulation Type for ***PM***.
9. Set Deviation for ***8.0 Rad***.
10. Set Format for ***TONE***. With Cursor on Format, press CONT Soft Function Key F2.
11. Set Tone Freq for ***5000.0 Hz***.
12. Set Shape to ***SINE***.
13. Verify Modulation Analyzer reads 8 Radians Deviation (±0.5 Radians + residual [Step 7]). If not, go to Step 15.
14. Set COM-120B power to OFF and disconnect test equipment.

PERFORM THE FOLLOWING ONLY WHEN REQUIRED.

15. Press SETUP MEMORY Key (21).
16. Select "1. Calibration" from Setup Screen.
17. Press ENTER Key to access Password Field. Press SHIFT, F, M, Y, S, V, C, D and SHIFT Data Entry Keys (5). Press ENTER Key.
18. Set Modulation Analyzer for 300 Hz High-Pass Filter and 3 kHz Low-Pass Filter.
19. Select "8. RF GENERATOR - PM DEVIATION" to access RF GENERATOR - PM DEVIATION CALIBRATION Screen.

STEP	PROCEDURE

20. With cursor on "PM DEVIATION 15 RAD," press ENTER Key.

21. Edit Data Field using DATA SCROLL Keys (17) for Modulation Analyzer reading closest to 15 Radians.

22. Press ENTER Key and wait until Field displays ***CALIBRATED***.

23. With cursor on "PM DEVIATION 10 RAD," press ENTER Key.

24. Edit Data Field using DATA SCROLL Keys (17) for Modulation Analyzer reading closest to 10 Radians.

25. Press ENTER Key and wait until Field displays ***CALIBRATED***.

26. With cursor on "PM DEVIATION 1 RAD," press ENTER Key.

27. Edit Data Field using DATA SCROLL Keys (17) for Modulation Analyzer reading closest to 1 Radian.

28. Press ENTER Key and wait until Field displays ***CALIBRATED***.

29. Press RETURN Soft Function Key F6 to return to Calibration Screen. Go to Step 3.

Scans by ArtekMedia © 2008

Scans by ArtekMedia © 2008

1-8-9 RF GENERATE AM MODULATION CALIBRATION

PREREQUISITES: 1-8-1 POWER SUPPLY CALIBRATION

EQUIPMENT REQUIRED: 1 MODULATION ANALYZER

FIGURES: NONE

STEP PROCEDURE

1. Apply Power to COM-120B. Allow 5 minute warm-up period.
2. Connect T/R Connector (12) to Modulation Analyzer Input.
3. Press GEN Test Mode Key (3) to access RF Generate Operation Screen.
4. Set RF Field to ***101.0000 MHz***.
5. Set Output to ***T/R*** and Output Level to ***-20 dBm***.
6. Set All Modulation Sources to OFF.
7. Set Modulation Analyzer for 101 MHz RF. Set Modulation Analyzer for 3 kHz Low-Pass Filter, 300 Hz High-Pass Filter, Peak+ and AM Measurement. Record Residual on Modulation Analyzer.
8. Set GEN1 Modulation Type for ***AM***.
9. Set Modulation for ***30%***.
10. Set Format for ***TONE***. With Cursor on Format, press CONT Soft Function Key F2.
11. Set Tone Freq for ***1000.0 Hz***.
12. Set Shape to ***SINE***.
13. Verify Modulation Analyzer reads 30% Modulation (±6% + residual [Step 7]). If not, go to Step 21.
14. Set Modulation to ***50%***.
15. Verify Modulation Analyzer reads 50% Modulation (±6% + residual [Step 7]). If not, go to Step 21.
16. Set Modulation to ***70%***.
17. Verify Modulation Analyzer reads 70% Modulation (±6% + residual [Step 7]). If not, go to Step 21.
18. Set Modulation to ***90%***.
19. Verify Modulation Analyzer reads 90% Modulation (±6% + residual [Step 7]). If not, go to Step 21.

20. Set COM-120B power to OFF and disconnect test equipment.

PERFORM THE FOLLOWING ONLY WHEN REQUIRED.

21. Set Modulation Analyzer for 300 Hz High-Pass Filter and 3 kHz Low-Pass Filter.

22. Press SETUP MEMORY Key (21).

23. Select "1. Calibration" from Setup Screen.

24. Press ENTER Key to access Password Field. Press SHIFT, F, M, Y, S, V, C, D and SHIFT Data Entry Keys (5). Press ENTER Key.

25. Select "9. RF GENERATOR - AM MODULATION" to access RF GENERATOR - AM MODULATION CALIBRATION Screen.

26. Press ENTER Key. Edit Data Field using DATA SCROLL Keys (17) for Modulation Analyzer reading closest to 70% Modulation.

27. Press ENTER Key and wait until Field displays ***CALIBRATED***.

28. Press RETURN Soft Function Key F6 to return to Calibration Screen. Go to Step 3.

Scans by ArtekMedia © 2008

Scans by ArtekMedia © 2008

1-8-10 RF GENERATE EXTERNAL MODULATION CALIBRATION

PREREQUISITES:
- 1-8-1 POWER SUPPLY CALIBRATION
- 1-8-7 RF GENERATE FM DEVIATION CALIBRATION
- 1-8-8 RF GENERATE PM DEVIATION CALIBRATION
- 1-8-9 RF GENERATE AM MODULATION CALIBRATION

EQUIPMENT REQUIRED:
- 1 AUDIO ANALYZER
- 1 MODULATION ANALYZER

FIGURES: 1-5

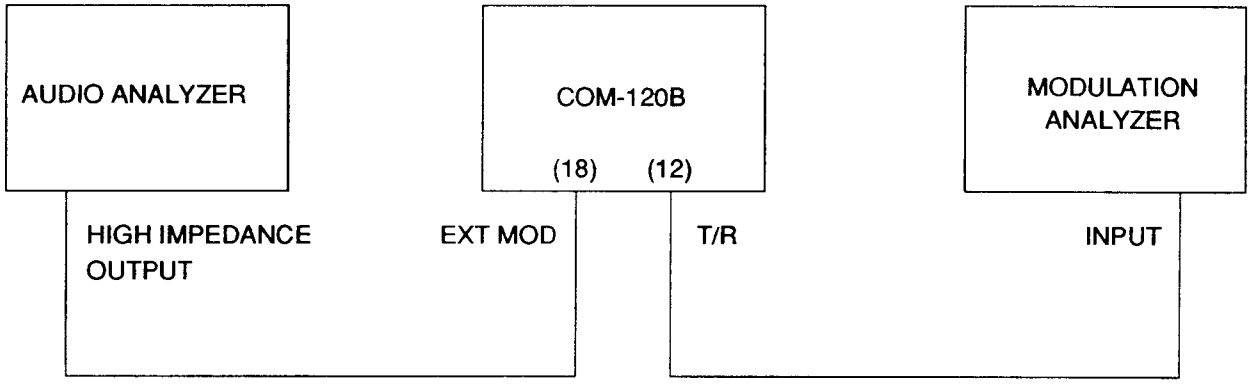

Figure 1-5 External Modulation Calibration Setup

STEP	PROCEDURE

1. Apply Power to COM-120B. Allow 5 minute warm-up period.
2. Connect Test Equipment as shown in Figure 1-5.
3. Press GEN Test Mode Key (3) to access RF Generate Operation Screen.
4. Set RF Field to ***101.0000 MHz***.
5. Set Output to ***T/R*** and Output Level to ***-20 dBm***.
6. Set All Modulation Sources to OFF.
7. Set Modulation Analyzer for 3 kHz Low-Pass Filter, 300 Hz High-Pass Filter, Peak+ and AM Measurement.
8. Set EXT Modulation Type for ***AM***.
9. Set Audio Analyzer for 1 kHz tone at approximately 5.657 Vrms output. Adjust Audio Analyzer for Modulation Analyzer reading of 80%.

10. Verify COM-120B Modulation Reading is 80% (±10%). If not, go to Step 32.
11. Set EXT Modulation Type for ***FM***. Set Modulation Analyzer for FM Measurement.
12. Set Deviation Range for ***NAR 1***.
13. Adjust Audio Analyzer for Modulation Analyzer reading of 16 kHz.
14. Verify COM-120B Modulation Reading is 16 kHz (±1.6 kHz). If not, go to Step 32.
15. Set Deviation Range for ***NAR 2***.
16. Adjust Audio Analyzer for Modulation Analyzer reading of 8 kHz.
17. Verify COM-120B Modulation Reading is 8 kHz (±0.8 kHz). If not, go to Step 32.
18. Set Deviation Range for ***NAR 3***.
19. Adjust Audio Analyzer for Modulation Analyzer reading of 1.55 kHz.
20. Verify COM-120B Modulation Reading is 1.55 kHz (±0.155 kHz). If not, go to Step 32.
21. Set Deviation Range for ***WIDE.***
22. Adjust Audio Analyzer for Modulation Analyzer reading of 80 kHz.
23. Verify COM-120B Modulation Reading is 80 kHz (±8 kHz). If not, go to Step 32.
24. Set EXT Modulation Type for ***PM***. Set Modulation Analyzer for PM Measurement.
25. Set Deviation Range for ***NAR 1***.
26. Verify COM-120B Modulation Reading is 16 Radians (±1.6 Radians). If not, go to Step 32.
27. Set Deviation Range for ***NAR 2***.
28. Verify COM-120B Modulation Reading is 8 Radians (±0.8 Radians). If not, go to Step 32.
29. Set Deviation Range for ***NAR 3***.
30. Verify COM-120B Modulation Reading is 1.55 Radians (±0.155 Radians). If not, go to Step 32.
31. Set COM-120B power to OFF and disconnect test equipment.

PERFORM THE FOLLOWING ONLY WHEN REQUIRED.

32. Press SETUP MEMORY Key (21).
33. Select "1. Calibration" from Setup Screen.

Scans by ArtekMedia © 2008

Scans by ArtekMedia © 2008

34. Press ENTER Key to access Password Field. Press SHIFT, F, M, Y, S, V, C, D and SHIFT Data Entry Keys (5). Press ENTER Key.

35. Select "10. RF GENERATOR - EXTERNAL MODULATION" and press ENTER to access EXTERNAL MODULATION CALIBRATION SCREEN.

36. Cursor to EXTERNAL MODULATION Field and press ENTER.

37. Scroll to ***AM***. Press ENTER.

38. Set Audio Analyzer 1 kHz tone to approximately 5.8 Vrms for 80% Modulation on the Modulation Analyzer. Adjust Audio Analyzer output as required.

39. Cursor to MEASURED MODULATION Field and press ENTER.

40. Use DATA ENTRY Keypad to enter Modulation Analyzer reading.

41. Press ENTER Key and wait until Field displays ***CALIBRATED***.

42. Cursor to EXTERNAL MODULATION Field and press ENTER.

43. Scroll to ***FM NARR 1***. Press ENTER.

44. Set Audio Analyzer 1 kHz tone to approximately 5.45 Vrms for 15 kHz Deviation on the Modulation Analyzer. Adjust Audio Analyzer output as required.

45. Cursor to MEASURED DEVIATION Field and press ENTER.

46. Use DATA ENTRY Keypad to enter Modulation Analyzer reading.

47. Press ENTER Key and wait until Field displays ***CALIBRATED***.

48. Repeat Steps 43 through 47 for the remaining FM calibrations using this table as a guide:

External Modulation	Deviation Range (kHz)	Audio Analyzer (≈Vrms)
FM NARR 2	10	7.20
FM NARR 3	1	3.63
FM WIDE	50	3.66

49. Cursor to EXTERNAL MODULATION Field and press ENTER.

50. Scroll to ***PM NARR 1***. Press ENTER.

51. Set Audio Analyzer 1 kHz tone to approximately 5.45 Vrms for 15 Rad Deviation on the Modulation Analyzer. Adjust Audio Analyzer output as required.

52. Cursor to MEASURED DEVIATION Field and press ENTER.

53. Use DATA ENTRY Keypad to enter Modulation Analyzer reading.

54. Press ENTER Key and wait until Field displays ***CALIBRATED***.

55. Repeat Steps 51 through 54 for the remaining PM calibrations using this table as a guide:

External Modulation	Deviation Range (Rad)	Audio Analyzer (≈Vrms)
PM NARR 2	10	7.20
PM NARR 3	1	3.66

56. Disconnect coaxial cable from EXT MOD IN Connector.

57. Perform procedures in para 1-8-7 through para 1-8-10 until no adjustments are required.

58. Set COM-120B power to OFF and disconnect test equipment.

Scans by ArtekMedia © 2008

Scans by ArtekMedia © 2008

1-8-11 SPECTRUM ANALYZER CALIBRATION

PREREQUISITES:	1-8-1	POWER SUPPLY CALIBRATION
	1-8-2	TCXO/OCXO CALIBRATION
EQUIPMENT REQUIRED:	1	COM-120B MAINTENANCE KIT
	1	DIGITAL MULTIMETER (DMM)
	1	SIGNAL GENERATOR
FIGURES:	1-6	
	1-7	

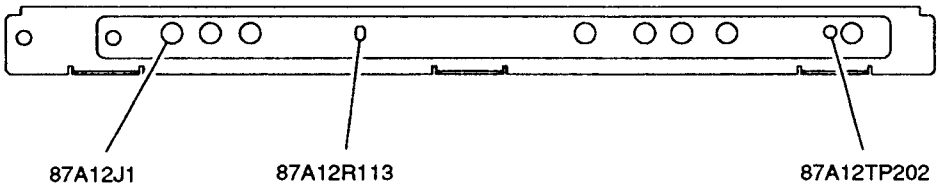

Figure 1-6 Analyzer Tray Calibration Points

STEP PROCEDURE

1. Apply Power to COM-120B. Allow 5 minute warm-up period.
2. Press ANLYZ Instruments Key (4) to access Spectrum Analyzer Operation Screen.
3. Set Spectrum Analyzer Fields as follows:

Scan Width	***1 kHz***
Logarithmic Function	***dBm***
Tracking Generator	***OFF***
Mode	***LIVE***
Attenuation	***0 dB***
RF Input	***ANT***
Scale	***10 dB***
Center Frequency	***100.0000 MHz***

4. Verify top of screen is -30 dBm. If not, move cursor to Reference. Press ENTER Key. Press DATA SCROLL Keys (17) until -30 dBm is top of screen. Press ENTER Key.
5. Disconnect W24 from 87A12J1 (Figure 1-6).

6. Connect Signal Generator to 87A12J1 (Figure 1-6). Set Signal Generator for 10.7 MHz signal at -20 dBm.

7. Measure dc voltage at 87A12TP202 (Figure 1-6). Adjust Signal Generator Output for 1.4 Vdc on DMM.

8. Cursor to Center Frequency, press Set Ref Soft Function Key F1. Note Trace peak level.

9. Disconnect Signal Generator from 87A12J1 (Figure 1-6). Connect W24 to 87A12J1 (Figure 1-6).

10. Set Signal Generator for 100 MHz at -40 dBm. Connect Signal Generator to ANTENNA Connector (7).

11. Verify Trace peak level matches reference level from Step 8 (±2 dBm). Adjust 87A12R113 (Figure 1-6) as required. Labeled as Analyzer IF Gain.

12. With Cursor on Center Frequency, press Set Ref Soft Function Key F1.

13. Set Scan Width to ***100 kHz***. Note Signal Level.

14. Set Scan Width to ***10 MHz, 500 kHz***, ***10 kHz*** and ***1 kHz***. Verify Signal Level matches Reference (Step 12) for each Scan Width setting (±2 dB). If in tolerance, go to Step 32.

PERFORM STEPS 15 THROUGH 32 ONLY WHEN REQUIRED.

15. Set COM-120B Main Power Switch to OFF.

16. Disconnect coaxial cables from Analyzer Tray.

17. Remove Analyzer Tray from COM-120B. Install Analyzer Tray Extender Card in COM-120B. Install Analyzer Tray on Analyzer Tray Extender Card.

18. Connect Extender Coaxial Cables to Analyzer Tray coaxial cables using SMB-SMB adapters. Install Extender Coaxial Cables to Analyzer Tray.

19. Set COM-120B Main Power Switch to ON. Apply Power to COM-120B. Allow 5 minute warm-up period.

20. Press ANLYZ Instruments Key (4) to access Spectrum Analyzer Operation Screen.

21. Set Scan Width to ***100 kHz***. Note Signal Level.

22. Set Scan Width to ***500 kHz***. Verify Signal Level matches Reference (Step 21) (±2 dB). Adjust 87A12R221 as necessary (Figure 1-7).

23. Set Scan Width to ***10 kHz***. Verify Signal Level matches Reference (Step 21) (±2 dB). Adjust 87A12R254 as necessary (Figure 1-7).

24. Set Scan Width to ***1 kHz***. Verify Signal Level matches Reference (Step 21) (±2 dB). Adjust 87A12R286 as necessary (Figure 1-7).

25. Set Scan Width to ***10 MHz***. Note Signal Level.

Scans by ArtekMedia © 2008

Scans by ArtekMedia © 2008

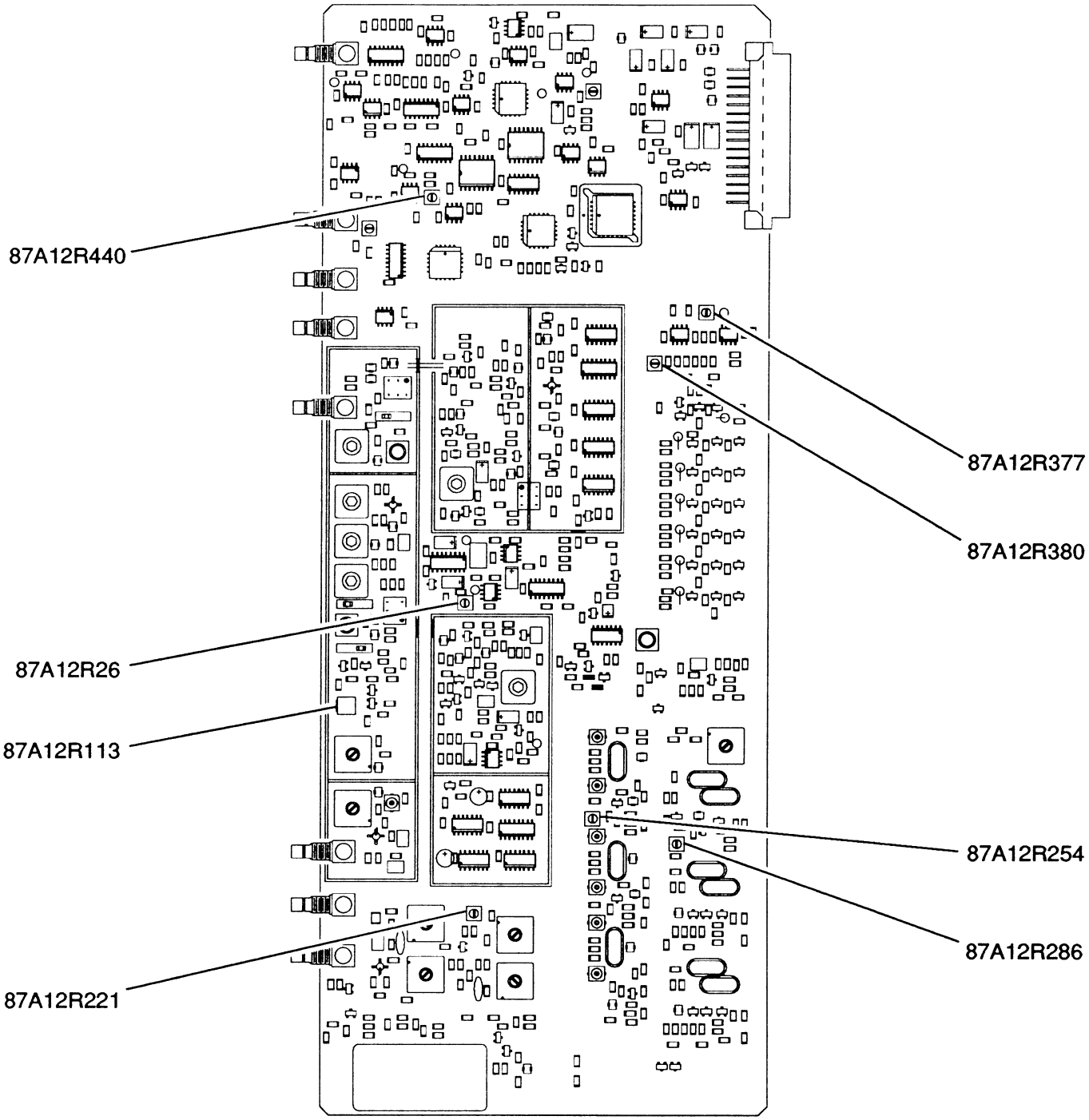

Figure 1-7 Extended Analyzer Tray Calibration Points

26. Set COM-120B Main Power Switch to OFF.

27. Disconnect coaxial cables from Analyzer Tray.

28. Remove Analyzer Tray from Analyzer Tray Extender Card. Remove Analyzer Tray Extender Card from COM-120B. Install Analyzer Tray in COM-120B.

29. Remove Extender Coaxial Cables and SMB-SMB Adapters from Analyzer Tray coaxial cables. Install Analyzer Tray Coaxial Cables to Analyzer Tray.

30. Set COM-120B Main Power Switch to ON. Apply Power to COM-120B. Allow 5 minute warm-up period.

31. Press ANLYZ Instruments Key (4) to access Spectrum Analyzer Operation Screen.

32. Go to Step 13.

33. Set Scan Width to ***100 kHz***.

34. Step Signal Generator from -30 to -90 dBm. Verify each 10 dB step decreases signal peak 10 dB (±2 dB) from previous step. Use -40 dBm as reference. If in tolerance, go to Step 50.

PERFORM STEPS 35 THROUGH 49 ONLY WHEN REQUIRED.

35. Set COM-120B Main Power Switch to OFF.

36. Disconnect coaxial cables from Analyzer Tray.

37. Remove Analyzer Tray from COM-120B. Install Analyzer Tray Extender Card in COM-120B. Install Analyzer Tray on Analyzer Tray Extender Card.

38. Connect Extender Coaxial Cables to Analyzer Tray coaxial cables using SMB-SMB adapters. Install Extender Coaxial Cables to Analyzer Tray.

39. Set COM-120B Main Power Switch to ON. Apply Power to COM-120B. Allow 5 minute warm-up period.

40. Press ANLYZ Instruments Key (4) to access Spectrum Analyzer Operation Screen.

41. Set Signal Generator for -40 dBm output. Adjust 87A12R377 (Figure 1-7), as needed, for proper display.

42. Set Signal Generator for -90 dBm output. Adjust 87A12R380 (Figure 1-7), as needed, for proper display. Repeat Steps 40 and 41 as needed for proper display.

43. Set COM-120B Main Power Switch to OFF.

44. Disconnect coaxial cables from Analyzer Tray.

45. Remove Analyzer Tray from Analyzer Tray Extender Card. Remove Analyzer Tray Extender Card from COM-120B. Install Analyzer Tray in COM-120B.

Scans by ArtekMedia © 2008

Scans by ArtekMedia © 2008

46. Remove Extender Coaxial Cables and SMB-SMB Adapters from Analyzer Tray coaxial cables. Install Analyzer Tray Coaxial Cables to Analyzer Tray.

47. Set COM-120B Main Power Switch to ON. Apply Power to COM-120B. Allow 5 minute warm-up period.

48. Press ANLYZ Instruments Key (4) to access Spectrum Analyzer Operation Screen.

49. Go to Step 34.

50. Set Signal Generator for -40 dBm.

51. Set Scan Width to ***20 kHz***.

52. Verify Signal Peak is on center graticule (±0.5 Major Divisions). If in tolerance go to Step 67.

PERFORM STEPS 53 THROUGH 66 ONLY WHEN REQUIRED.

53. Set COM-120B Main Power Switch to OFF.

54. Disconnect coaxial cables from Analyzer Tray.

55. Remove Analyzer Tray from COM-120B. Install Analyzer Tray Extender Card in COM-120B. Install Analyzer Tray on Analyzer Tray Extender Card.

56. Connect Extender Coaxial Cables to Analyzer Tray coaxial cables using SMB-SMB adapters. Install Extender Coaxial Cables to Analyzer Tray.

57. Set COM-120B Main Power Switch to ON. Apply Power to COM-120B. Allow 5 minute warm-up period.

58. Press ANLYZ Instruments Key (4) to access Spectrum Analyzer Operation Screen.

59. Switch Scan Width between ***20 kHz*** and ***200 kHz***, adjusting 87A12R440 for setting that allows both settings to be closest to center graticule.

60. Set COM-120B Main Power Switch to OFF.

61. Disconnect coaxial cables from Analyzer Tray.

62. Remove Analyzer Tray from Analyzer Tray Extender Card. Remove Analyzer Tray Extender Card from COM-120B. Install Analyzer Tray in COM-120B.

63. Remove Extender Coaxial Cables and SMB-SMB Adapters from Analyzer Tray coaxial cables. Install Analyzer Tray Coaxial Cables to Analyzer Tray.

64. Set COM-120B Main Power Switch to ON. Apply Power to COM-120B. Allow 5 minute warm-up period.

65. Press ANLYZ Instruments Key (4) to access Spectrum Analyzer Operation Screen.

66. Go to Step 52.

67. Press ANLYZ Instruments Key (4). Set Scan Width to ***1 kHz***.

68. Verify Signal Peak is on center graticule (±0.5 Major Divisions). If in tolerance, go to Step 76.

PERFORM STEPS 69 THROUGH 75 ONLY WHEN REQUIRED.

69. Press SETUP MEMORY Key (21).

70. Select "1. Calibration" from Setup Screen.

71. Press ENTER Key to access Password Field. Press SHIFT, F, M, Y, S, V, C, D and SHIFT Data Entry Keys (5). Press ENTER Key.

72. Select "5. SPECTRUM ANALYZER" to access SPECTRUM ANALYZER CALIBRATION Screen.

73. Press ENTER Key. Edit Data Field using DATA SCROLL Keys (17) until signal is centered.

74. Press ENTER Key and wait until Field displays ***CALIBRATED***.

75. Press RETURN Soft Function Key F6 to return to Calibration Screen. Go to Step 68.

76. Set Signal Generator for 1 kHz tone at 5 kHz devation.

77. Verify signal peaks on Major Divisions (±0.5 Major Divisions). If in tolerance, go to Step 92.

PERFORM STEPS 78 THROUGH 91 ONLY WHEN REQUIRED.

78. Set COM-120B Main Power Switch to OFF.

79. Disconnect coaxial cables from Analyzer Tray.

80. Remove Analyzer Tray from COM-120B. Install Analyzer Tray Extender Card in COM-120B. Install Analyzer Tray on Analyzer Tray Extender Card.

81. Connect Extender Coaxial Cables to Analyzer Tray coaxial cables using SMB-SMB adapters. Install Extender Coaxial Cables to Analyzer Tray.

82. Set COM-120B Main Power Switch to ON. Apply Power to COM-120B. Allow 5 minute warm-up period.

83. Press ANLYZ Instruments Key (4) to access Spectrum Analyzer Operation Screen.

84. Adjust 87A12R26 (Figure 1-7) until signal peaks on Major Divisions.

85. Set COM-120B Main Power Switch to OFF.

86. Disconnect coaxial cables from Analyzer Tray.

87. Remove Analyzer Tray from Analyzer Tray Extender Card. Remove Analyzer Tray Extender Card from COM-120B. Install Analyzer Tray in COM-120B.

Scans by ArtekMedia © 2008

Scans by ArtekMedia © 2008

STEP	PROCEDURE

88. Remove Extender Coaxial Cables and SMB-SMB Adapters from Analyzer Tray coaxial cables. Install Analyzer Tray Coaxial Cables to Analyzer Tray.

89. Set COM-120B Main Power Switch to ON. Apply Power to COM-120B. Allow 5 minute warm-up period.

90. Press ANLYZ Instruments Key (4) to access Spectrum Analyzer Operation Screen.

91. Go to Step 77.

92. Set COM-120B power to OFF and disconnect test equipment.

1-8-12 MIXER NULL CALIBRATION

PREREQUISITES: 1-8-1 POWER SUPPLY CALIBRATION
1-8-2 TCXO/OCXO CALIBRATION

EQUIPMENT REQUIRED: NONE

FIGURES: 1-8

STEP PROCEDURE

1. Apply Power to COM-120B. Allow 5 minute warm-up period.
2. Press ANLYZ Instruments Key (4) to access Spectrum Analyzer Operation Screen.
3. Set Spectrum Analyzer Fields as follows:

Scan Width	***1 MHz***
Logarithmic Function	***dBm***
Tracking Generator	***OFF***
Mode	***LIVE***
Attenuation	***0 dB***
RF Input	***ANT***
Scale	***10 dB***
Center Frequency	***0.2500 MHz***

4. Verify Zero Frequency Response is ≥1.5 Major Divisions down from top of screen. If not, go to Step 6.
5. Set COM-120B power to OFF and disconnect test equipment.

PERFORM THE FOLLOWING ONLY WHEN REQUIRED.

6. Set COM-120B Main Power Switch (25) to OFF.
7. Disconnect coaxial cables and remove Receiver Tray from COM-120B.
8. Install Receiver Extender Tray into COM-120B. Install Receiver Ribbon Cable between Receiver Extender Tray and Receiver Tray. Connect coaxial cables.
9. Apply Power to COM-120B. Allow 5 minute warm-up period.
10. Press ANLYZ Instruments Key (4) to access Spectrum Analyzer Operation Screen.
11. Set Spectrum Analyzer Fields as follows:

Scan Width	***1 MHz***
Logarithmic Function	***dBm***
Tracking Generator	***OFF***
Mode	***LIVE***
Attenuation	***0 dB***
RF Input	***ANT***
Scale	***10 dB***
Center Frequency	***0.250 MHz***

Scans by ArtekMedia © 2008

Scans by ArtekMedia © 2008

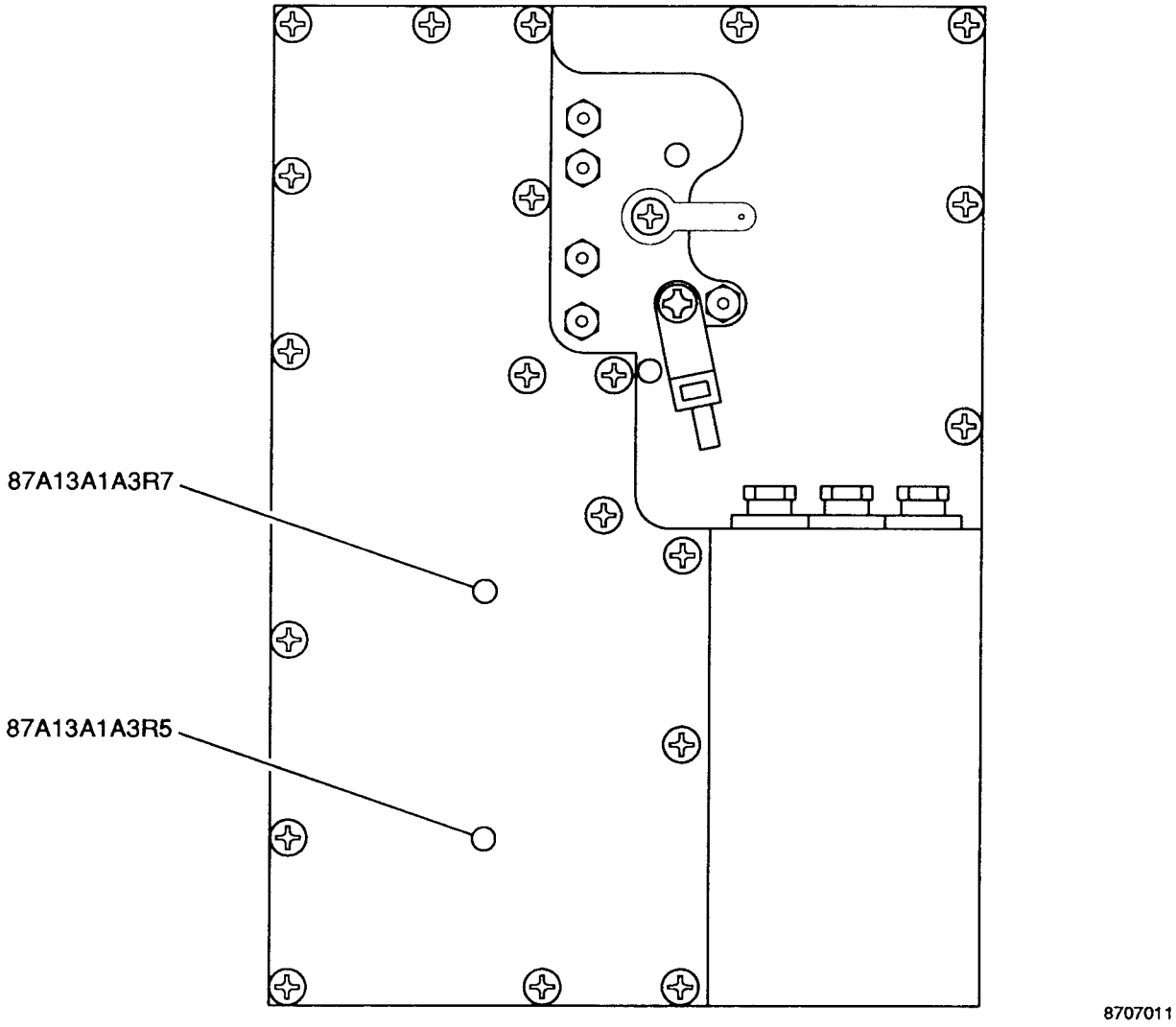

Figure 1-8 Mixer Null Calibration Points

12. Adjust 87A13A1A3R5 and 87A13A1A3R7 (Figure 1-8) until Zero Frequency Response is ≥1.5 Major Divisions down from top of screen.

13. Set COM-120B Main Power Switch (25) to OFF.

14. Disconnect coaxial cables and Receiver Ribbon Cable from Receiver Tray. Remove Receiver Extender Card and Receiver Ribbon Cable from COM-120B.

15. Install Receiver Tray into COM-120B. Connect coaxial cables.

16. Go to Step 1.

1-8-13 FM DEVIATION METER CALIBRATION

PREREQUISITES:	1-8-1	POWER SUPPLY CALIBRATION
	1-8-2	TCXO/OCXO CALIBRATION
EQUIPMENT REQUIRED:	1	MODULATION ANALYZER
	1	SIGNAL GENERATOR
FIGURES:	1-9	

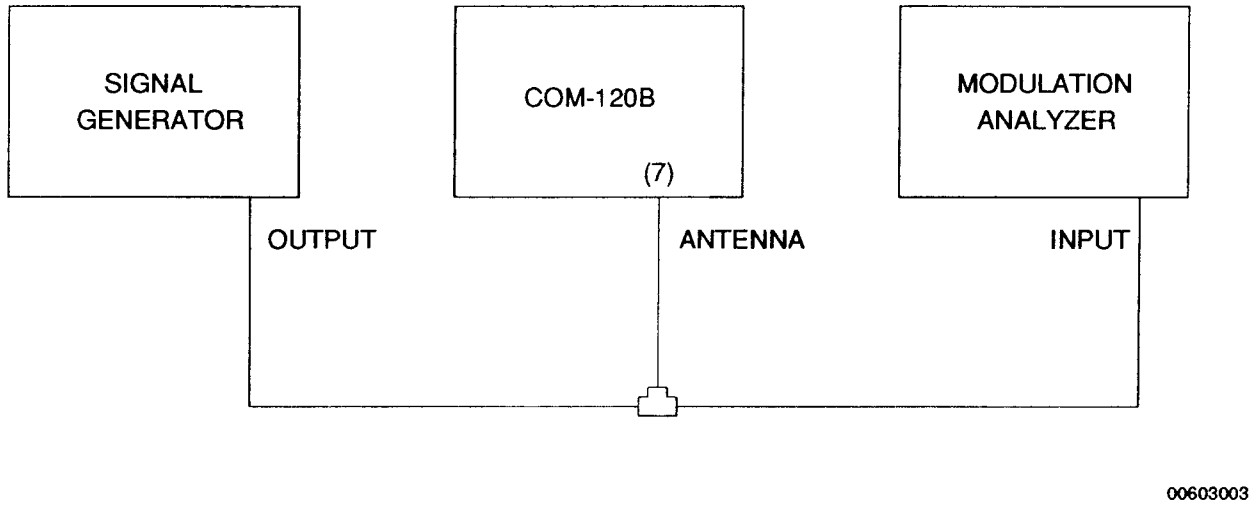

Figure 1-9 Modulation Meters Calibration Setup

STEP	PROCEDURE

1. Apply Power to COM-120B. Allow 5 minute warm-up period.
2. Press REC Test Mode Key (3) to access RF Receive Operation Screen.
3. Set Receive Operation Screen Parameters as follows:

RF Field	***101.0000 MHz***
Input	***ANT***
Attenuation	***30 dB***
Demodulation Type	***FM***
IF Bandwidth	***300 kHz***

4. Move cursor to Line.
5. Press CONFIG Soft Function Key F6 to access Receiver Audio/Data Filters Setup Menu.
6. Set Modulation Meters Filter Line High-Pass Filter for ***300 Hz***.
7. Set Modulation Meters Filter Line Low-Pass Filter for ***4 kHz***.

Scans by ArtekMedia © 2008

Scans by ArtekMedia © 2008

8. Press EXEC Soft Function Key F5.

9. Press RETURN Soft Function Key F6 to return to RF Receive Operation Screen.

10. Connect Test Equipment as shown in Figure 1-9.

11. Access Full Screen Deviation Meter.

12. Set FM Deviation Meter Parameters as follows:

Scope/Demod Coupling	***AC***
Range	***20 kHz***
Peak Hold	***OFF***
Average	***OFF***

13. Set Signal Generator for 101 MHz Signal FM Modulated with 1 kHz tone at 10 kHz deviation at -10 output level.

14. Set Modulation Analyzer for FM Measurement with 300 Hz High-Pass Filter, 3 kHz Low-Pass Filter and Peak+ detector activated.

15. Verify Modulation Analyzer reading and FM Deviation Meter Reading match (±1.1 kHz). If not, go to Step 18.

16. Set Range to ***50 kHz***.

17. Set Signal Generator for 20 kHz Deviation.

18. Verify Modulation Analyzer reading and FM Deviation Meter Reading match (±2.6 kHz). If not, go to Step 18.

19. Set Range to ***100 kHz***.

20. Set Signal Generator for 50 kHz Deviation.

21. Verify Modulation Analyzer reading and FM Deviation Meter Reading match (±5.1 kHz). If not, go to Step 18.

22. Set COM-120B power to OFF and disconnect test equipment.

PERFORM THE FOLLOWING ONLY WHEN REQUIRED.

23. Press SETUP MEMORY Key (21).

24. Select "1. Calibration" from Setup Screen.

25. Press ENTER Key to access Password Field. Press SHIFT, F, M, Y, S, V, C, D and SHIFT Data Entry Keys (5). Press ENTER Key.

26. Select "11. FM DEVIATION METER" to access FM DEVIATION METER CALIBRATION Screen.

27. Set Signal Generator for 10 kHz deviation.

STEP	PROCEDURE

28. Move cursor to 10 kHz Field.
29. Enter Modulation Analyzer Reading in Data Field using DATA ENTRY Keys (5).
30. Press ENTER Key and wait until Field displays ***CALIBRATED***.
31. Set Signal Generator for 20 kHz deviation.
32. Move cursor to 20 kHz Field.
33. Enter Modulation Analyzer Reading in Data Field using DATA ENTRY Keys (5).
34. Press ENTER Key and wait until Field displays ***CALIBRATED***.
35. Set Signal Generator for 50 kHz deviation.
36. Move cursor to 50 kHz Field.
37. Enter Modulation Analyzer Reading in Data Field using DATA ENTRY Keys (5).
38. Press ENTER Key and wait until Field displays ***CALIBRATED***.
39. Set Signal Generator for 100 kHz deviation.
40. Move cursor to 100 kHz Field.
41. Enter Modulation Analyzer Reading in Data Field using DATA ENTRY Keys (5).
42. Press ENTER Key and wait until Field displays ***CALIBRATED***.
43. Press RETURN Soft Function Key F6. Go to Step 2.

Scans by ArtekMedia © 2008

Scans by ArtekMedia © 2008

1-8-14 PM DEVIATION METER CALIBRATION

PREREQUISITES:	1-8-1 POWER SUPPLY CALIBRATION 1-8-2 TCXO/OCXO CALIBRATION
EQUIPMENT REQUIRED:	1 MODULATION ANALYZER 1 SIGNAL GENERATOR
FIGURES:	1-9

STEP PROCEDURE

1. Apply Power to COM-120B. Allow 5 minute warm-up period.
2. Press REC Test Mode Key (3) to access RF Receive Operation Screen.
3. Set Receive Operation Screen Parameters as follows:

RF Field	***101.0000 MHz***
Input	***ANT***
Attenuation	***30 dB***
Demodulation Type	***PM***
IF Bandwidth	***300 kHz***

4. Move cursor to Line.
5. Press CONFIG Soft Function Key F6 to access Receiver Audio/Data Filters Setup Menu.
6. Set Modulation Meters Filter Line High-Pass Filter for ***300 Hz.***
7. Set Modulation Meters Filter Line Low-Pass Filter for ***4 kHz.***
8. Press EXEC Soft Function Key F5.
9. Press RETURN Soft Function Key F6 to return to RF Receive Operation Screen.
10. Connect Test Equipment as shown in Figure 1-9.
11. Access Full Screen Phase Meter.
12. Set Phase Meter Parameters as follows:

Range	***10 RAD***
Peak Hold	***OFF***
Average	***OFF***

13. Set Signal Generator for 101 MHz Signal FM Modulated with 1 kHz tone at 5 kHz deviation at -10 dBm output level.
14. Set Modulation Analyzer for PM Measurement with 300 Hz High-Pass Filter, 3 kHz Low-Pass Filter and Peak+ detector activated.
15. Verify Modulation Analyzer reading and Phase Meter Reading match (±0.7 Radians). If not, go to Step 12.

16. Set COM-120B power to OFF and disconnect test equipment.

PERFORM THE FOLLOWING ONLY WHEN REQUIRED.

17. Press SETUP MEMORY Key (21).

18. Select "1. Calibration" from Setup Screen.

19. Press ENTER Key to access Password Field. Press SHIFT, F, M, Y, S, V, C, D and SHIFT Data Entry Keys (5). Press ENTER Key.

20. Select "12. PM DEVIATION METER" to access PM DEVIATION METER CALIBRATION Screen.

21. Enter Modulation Analyzer Reading in Data Field using DATA ENTRY Keys (5).

22. Press ENTER Key and wait until Field displays ***CALIBRATED***.

23. Press RETURN Soft Function Key F6. Go to Step 2.

Scans by ArtekMedia © 2008

Scans by ArtekMedia © 2008

1-8-15 AM MODULATION METER CALIBRATION

PREREQUISITES:	1-8-1 POWER SUPPLY CALIBRATION 1-8-2 TCXO/OCXO CALIBRATION
EQUIPMENT REQUIRED:	1 MODULATION ANALYZER 1 SIGNAL GENERATOR
FIGURES:	1-9

STEP PROCEDURE

1. Apply Power to COM-120B. Allow 5 minute warm-up period.
2. Press REC Test Mode Key (3) to access RF Receive Operation Screen.
3. Set Receive Operation Screen Parameters as follows:

RF Field	***101 MHz***
Input	***ANT***
Attenuation	***30 dB***
Demodulation Type	***AM***
IF Bandwidth	***300 kHz***

4. Move cursor to Line. Press CONFIG Soft Function Key F6 to access Receiver Audio/Data Filters Setup Menu. Set Modulation Meters Filter Line High-Pass Filter for ***300 Hz***. Set Modulation Meters Filter Line Low-Pass Filter for ***4 kHz***. Press EXEC Soft Function Key F5. Press RETURN Soft Function Key F6 to return to RF Receive Operation Screen.
5. Connect Test Equipment as shown in Figure 1-9.
6. Access Full Screen Modulation Meter.
7. Set AM Modulation Meter Parameters as follows:

Range	***100%***
Peak Hold	***OFF***
Average	***OFF***

8. Set Signal Generator for 101 MHz Signal AM Modulated with 1 kHz tone at 70% Modulation at -10 dBm output level.
9. Set Modulation Analyzer for AM Measurement with 300 Hz High-Pass Filter, 3 kHz Low-Pass Filter and Peak+ detector activated.
10. Verify Modulation Analyzer reading and AM Modulation Meter Reading match (±5.1%). If not, go to Step 12.
11. Set COM-120B power to OFF and disconnect test equipment.

PERFORM THE FOLLOWING ONLY WHEN REQUIRED.

12. Press SETUP MEMORY Key (21).
13. Select "1. Calibration" from Setup Screen.

STEP	PROCEDURE

14. Press ENTER Key to access Password Field. Press SHIFT, F, M, Y, S, V, C, D and SHIFT Data Entry Keys (5). Press ENTER Key.

15. Select "13. AM MODULATION METER" to access AM MODULATION METER CALIBRATION Screen.

16. Enter Modulation Analyzer Reading in Data Field using DATA ENTRY Keys (5).

17. Press ENTER Key and wait until Field displays ***CALIBRATED***.

18. Press RETURN Soft Function Key F6. Go to Step 2.

Scans by ArtekMedia © 2008

Scans by ArtekMedia © 2008

1-8-16 POWER METER CALIBRATION

PREREQUISITES: 1-8-1 POWER SUPPLY CALIBRATION
1-8-2 TCXO/OCXO CALIBRATION

EQUIPMENT REQUIRED:

1	10 W RF AMPLIFIER
1	20 dB ATTENUATOR
1	50 Ω TERMINATION
1	200 W RF AMPLIFIER
1	COAXIAL COUPLER
1	MEASURING RECEIVER
1	SIGNAL GENERATOR

FIGURES: 1-10

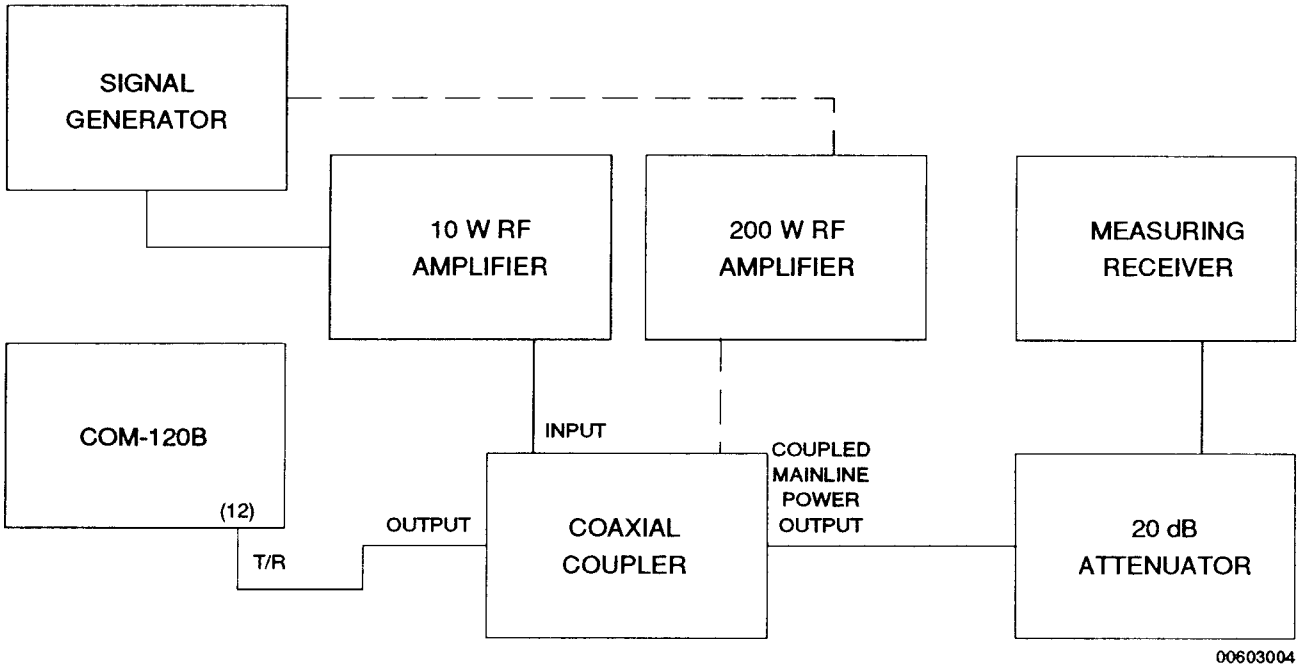

Figure 1-10 Power Meter Calibration Setup

STEP PROCEDURE

1. Apply Power to COM-120B. Allow 5 minute warm-up period.
2. Press REC Test Mode Key (3) to access RF Receive Operation Screen.
3. Set Receive Operation Screen Parameters as follows:

RF Field	***101 MHz***
Input	***T/R***
Attenuation	***0 dB***
IF Bandwidth	***300 kHz***

4. Access Full Screen RF Power Meter.

5. Set Power Meter Parameters as follows:

Range	***20 mW***
Peak Hold	***OFF***
Average	***OFF***
Cable Loss	***0.0 dB***

6. Connect 50 Ω Termination to T/R Connector (7). With cursor on Range, press RE-ZERO Soft Function Key F3.

7. Connect Test Equipment as shown in Figure 1-10.

8. Set Test Equipment for 101 MHz signal with 15 mW output level at connection to T/R Connector (7).

   NOTE: Test Equipment must be characterized for accuracy of 2.5% of required setting.

9. Verify Power Meter Reads 15 mW (±1.7 mW). If not, go to Step 21.

10. Set Range to ***2 W***.

11. Connect 50 Ω Termination to T/R Connector (7). With cursor on range, press RE-ZERO Soft Function Key F3.

12. Connect Test Equipment as shown in Figure 1-9.

13. Set Test Equipment for 1.5 W output level at connection to T/R Connector (7).

    NOTE: Test Equipment must be characterized for accuracy of 2.5% of required setting.

14. Verify Power Meter Reads 1.5 W (±0.3 W). If not, go to Step 21.

15. Set Range to ***50 W***.

16. Connect 50 Ω Termination to T/R Connector. With cursor on range, press RE-ZERO Soft Function Key F3.

17. Connect Test Equipment as shown in Figure 1-9.

18. Set Test Equipment for 40 W output level at connection to T/R Connector (7).

    NOTE: Test Equipment must be characterized for accuracy of 2.5% of required setting.

19. Verify Power Meter Reads 40 W (±4.1 W). If not, go to Step 21.

20. Set COM-120B power to OFF and disconnect test equipment.

    PERFORM THE FOLLOWING ONLY WHEN REQUIRED.

21. Press SETUP MEMORY Key (21).

22. Select "1. Calibration" from Setup Screen.

Scans by ArtekMedia © 2008

Scans by ArtekMedia © 2008

STEP	PROCEDURE

23. Press ENTER Key to access Password Field. Press SHIFT, F, M, Y, S, V, C, D and SHIFT Data Entry Keys (5). Press ENTER Key.

24. Select "4. RF POWER METER" to access RF POWER METER CALIBRATION Screen.

25. Connect 50 Ω Termination to T/R Connector (7). With cursor on "WITHOUT ANY INPUT PRESS THE ZERO KEY" Field, press ZERO Soft Function Key F1.

26. Connect Test Equipment as shown in Figure 1-9.

27. Move Cursor to 15.0 mW Field.

28. Set Test Equipment for 101 MHz signal with 15 mW output level at connection to T/R Connector (7).

    NOTE: Test Equipment must be characterized for accuracy of 2.5% of required setting.

29. Enter Power Level applied in Data Field using DATA ENTRY Keys (5).

30. Press ENTER Key and wait until Field displays ***CALIBRATED***.

31. Move Cursor to 1.50 W Field.

32. Set Test Equipment for 1.5 W output level at connection to T/R Connector (7).

    NOTE: Test Equipment must be characterized for accuracy of 2.5% of required setting.

33. Enter Power Level applied in Data Field using DATA ENTRY Keys (5).

34. Press ENTER Key and wait until Field displays ***CALIBRATED***.

35. Move Cursor to 40 W Field.

36. Set Test Equipment for 40 W output level at connection to T/R Connector (7).

    NOTE: Test Equipment must be characterized for accuracy of 2.5% of required setting.

37. Enter Power Level applied in Data Field using DATA ENTRY Keys (5).

38. Press ENTER Key and wait until Field displays ***CALIBRATED***.

39. Press RETURN Soft Function Key F6. Go to Step 2.

COM-120B CALIBRATION RECORD

Technician: _____ S/N: _____

Date: _____

PARA	STEP	DATA	RESULT
1-8-1	2.	+13 Vdc (±0.25 V), 87A6J10 PIN 1,13	_____
		+35 Vdc (±1 V), 87A6J10 PIN 2,14	_____
		-10.5 Vdc (±0.5 V), 87A6J10 PIN 3,15	_____
		+10.5 Vdc (±0.25 V), 87A6J10 PIN 4,16	_____
		+5 Vdc (+0.2 V/-0.0 V), 87A6J10 PIN 5,17	_____
		+5 Vdc (+0.2 V/-0.0 V), 87A6J10 PIN 7,19	_____
		+12 Vdc (±0.25 V), 87A6J10 PIN 9,21	_____
1-8-2	9.	998.0000 (±199.6 Hz)	_____
	10.	998.0000 (±10 Hz)	_____
	12.	998.0000 (±10 Hz) (Adjustment Required)	_____
1-8-3	9.	190 Vrms (±10.1 V)	_____
		19 Vrms (±1.02 V)	_____
		1.9 Vrms (±106 mV)	_____
	11.	190 Vdc (±10.1 V)	_____
		19 Vdc (±1.02 V)	_____
		1.9 Vdc (±106 mV)	_____
1-8-4	6.	-20 dBm (±2 dB)	_____
	7.	-90 dBm (±2 dB)	_____
	8.	-130 dBm (±2.5 dB)	_____
	10.	-20 dBm (±2 dB)	_____
	11.	-90 dBm (±2 dB)	_____
	12.	-130 dBm (±2.5 dB)	_____

Scans by ArtekMedia © 2008

Scans by ArtekMedia © 2008

PARA	STEP	DATA	RESULT
1-8-5	14.	Audio Analyzer reads 10% Distortion.	_____
	21.	Readings match (±0.6%).	_____
1-8-6	14.	Audio Analyzer reads 20 dB SINAD.	_____
	21.	Readings match (±1.1 dB).	_____
1-8-7	7.	Record Modulation Analyzer Residual.	_____
	13.	10 kHz Deviation (±600 Hz + residual [Step 7])	_____
	15.	Record Modulation Analyzer Residual.	_____
	18.	Readings match (±600 Hz + residual [Step 15])	_____
	20.	Record Modulation Analyzer Residual.	_____
	23.	10 kHz Deviation (±600 Hz + residual [Step 20])	_____
	25.	10 kHz Deviation (±600 Hz + residual [Step 20])	_____
	27.	Record Modulation Analyzer Residual.	_____
	31.	100 kHz Deviation (±5.5 kHz + residual [Step 27])	_____
	33.	Record Modulation Analyzer Residual.	_____
	36.	100 kHz Deviation (±5.5 kHz + residual [Step 33])	_____
	38.	Record Modulation Analyzer Residual.	_____
	41.	100 kHz Deviation (±5.5 kHz + residual [Step 38])	_____
	43.	100 kHz Deviation (±5.5 kHz + residual [Step 38])	_____
1-8-8	7.	Record Modulation Analyzer Residual.	_____
	13.	8 Radians Deviation (±0.5 Radians + residual [Step 7])	_____
1-8-9	7.	Record Residual on Modulation Analyzer.	_____
	13.	30% Modulation (±6% + residual [Step 7])	_____
	15.	50% Modulation (±6% + residual [Step 7])	_____
	17.	70% Modulation (±6% + residual [Step 7])	_____
	19.	90% Modulation (±6% + residual [Step 7])	_____
1-8-10	10.	80% (±10%)	_____

PARA	STEP	DATA	RESULT
	14.	16 kHz (±1.6 kHz)	_____
	17.	8 kHz (±0.8 kHz)	_____
	20.	1.55 kHz (±0.155 kHz)	_____
	23.	80 kHz (±8 kHz)	_____
	26.	16 Radians (±1.6 Radians)	_____
	28.	8 Radians (±0.8 Radians)	_____
	30.	1.55 Radians (±0.155 Radians)	_____
1-8-11	4.	Top of screen is -30 dBm.	_____
	8.	Note Trace peak level.	_____
	11.	Trace peak level matches reference level from Step 8 (±2 dBm).	_____
	13.	Note Signal Level.	_____
	14.	Trace peak level matches reference level from Step 13 (±2 dBm).	
		500 kHz	_____
		10 kHz	_____
		100 kHz	_____
		10 MHz	_____
	34.	-30 to -40 dBm, decreases 10 dB (±2 dB)	_____
		-40 to -50 dBm, decreases 10 dB (±2 dB)	_____
		-50 to -60 dBm, decreases 10 dB (±2 dB)	_____
		-60 to -70 dBm, decreases 10 dB (±2 dB)	_____
		-70 to -80 dBm, decreases 10 dB (±2 dB)	_____
		-80 to -90 dBm, decreases 10 dB (±2 dB)	_____
	52.	Peak is on Center Graticule (±0.5 Major Divisions).	_____
	68.	Peak is on Center Graticule (±0.5 Major Divisions).	_____
	77.	Peaks are on Major Divisions (±0.5 Major Divisions).	_____
1-8-12	4.	Zero Frequency Response is ≥1.5 Major Divisions down from top of screen.	_____
1-8-13	10.	Readings match (±1.1 kHz)	_____
	13.	Readings match (±2.6 kHz)	_____
	16.	Readings match (±5.1 kHz)	_____

Scans by ArtekMedia © 2008

Scans by ArtekMedia © 2008

PARA	STEP	DATA	RESULT
1-8-14	10.	Readings match (±0.7 Radians)	_____
1-8-15	10.	Readings match (±5.1%)	_____
1-8-16	9.	15 mW (±1.7 mW)	_____
	14.	1.5 W (±0.3 W)	_____
	19.	40 W (±4.1 W)	_____

COM-120B
COMPOSITE ASSEMBLY (REV. B)

BILL OF MATERIAL
LISTED BY REF. DESIGNATOR.
PRINT DATE 09/25/96

REF.DES.	QTY	PART NO.	DESCRIPTION	REV.
	1.00	7009-8742-600	WIRE KIT COM-120A	A
	1.00	7009-8742-800	COAX KIT COM-120A	B2
*01	1.00	6500-8780-000	MINOR ASSY, CHASSIS COM-120A	D
*02	9.00	6004-6005-400	TY-RAP,4.0 LG	
*03	2.00	4503-8752-600	RETAINER, SPEAKER	D
*05	47.00	2803-0250-006	SCREW,4-40 X 1/4 PPHM	
*06	4.00	2803-0188-003	SCREW,4-40 X 3/16 PFHM	
*07	18.00	2803-0125-006	SCREW,4-40 X 1/8 PPHM	
*08	1.00	1400-8762-100	BRACKET, SCREEN	D
*09	1.00	1405-8758-400	PANEL, REAR COM-120A	E1
*10	1.00	1414-8758-700	COVER, BATTERY	E
*11	1.00	2602-8766-000	SCREEN, REAR PANEL	D
*13	14.00	4104-8700-004	CARD GUIDES, PLASTIC CSM-120A*	A
*14	1.00	2850-8757-200	NUT, N CONN SPACER T/R PORT	D
*18	2.00	2845-8765-800	FINGERSTOCK, 3.70" BATTERY	A
*19	2.00	2845-8765-900	FINGERSTOCK, 2.85" BATTERY	A
*20	1.00	1400-8758-100	BRACKET, FAN DUCT	D
*21	1.00	6500-8781-700	MINOR ASSY, BATTERY BOX	A1
*22	8.00	2803-1188-006	SCREW,4-40 X 1 3/16 PPHMS	A
*25	1.00	2400-8764-300	OVERLAY, POWER SUPPLY	B3
*26	1.00	2400-8764-400	OVERLAY, REAR PANEL	A2
*27	1.00	2800-8764-500	SPACER, N CONNECTOR	D
*28	6.00	2803-0188-006	SCREW,4-40 X 3/16 PPHM	A
*30	1.00	2400-0000-005	INTERNAL OPTIONS TAG	A
*32	1.00	2400-8766-300	LABEL, BATTERY FUSE	A3
A01	1.00	7005-8742-400	MECH ASSY, FRONT PANEL	E1
A03	1.00	7010-8733-500	PCB ASSY, ATTENUATOR CONTROL	B1
A04	1.00	7005-8742-100	MECH ASSY, POWER TERM	F
A05	1.00	7005-8742-300	MECH ASSY, GENERATOR OUTPUT	D4
A06	1.00	7010-8730-000	PCB ASSY, MOTHERBOARD	C1
A08	1.00	7005-8740-700	MECH ASSY, SYNTHESIZER TRAY	G
A09	1.00	7010-8731-100	PCB ASSY, BASE BAND	E3
A10	1.00	7005-8740-200	MECH ASSY, GENERATOR TRAY	C1
A11	1.00	7005-8740-300	MECH ASSY, CONVERTER	D5
A12	1.00	7010-8731-300	PCB ASSY, ANALYZER	K
A13	1.00	7005-8740-400	MECH ASSY, RECEIVER TRAY	D
A14	1.00	7011-8731-800	FIRMWARE ASSY, VIDEO/CNTR/FUNC GEN	D3
A15	1.00	7110-8742-700	POWER SUPPLY, COM-120A	
A16	1.00	7005-8740-600	MECH ASSY, REF FREQ	F
A17	1.00	7005-8741-600	MECH ASSY, CONTROLLER TRAY	D
A30/A31	2.00	7005-8742-900	MECH ASSY, FAN	A2
AT1	1.00	2901-8700-110	ATTEN, PRG 110dB 10dB STEP RLY	B
AT1GL1	1.00	2850-0000-055	GROUND LUG 2 T-251	
J0	1.00	2200-0410-100	CONN,ADAPT,F BNC/F SMASTR BHD*	A1
LS01/LS02	2.00	5950-0000-004	SPEAKER, MYLAR 2.25 DIA *	A
W01	1.00	6042-8780-800	COAX SR .141 F N ST-M SMA ST	A1

Scans by ArtekMedia © 2008

Scans by ArtekMedia © 2008

REF.DES.	QTY	PART NO.	DESCRIPTION	REV.
W30	1.00	6042-8781-100	COAX SR .086 M SMA ST-M SMA RA	A1
W31	1.00	6042-8781-000	COAX SR .086 M SMA ST-M SMA ST	A1
W32	1.00	6042-8780-900	COAX SR .086 M SMA RA-M SMA RA	A1
W37	1.00	6045-8780-300	RBN CA ASSY, MOTHERBD-ATTEN	A2
W38	1.00	6045-8780-400	RBN CA ASSY, MOTHERBD-FT PNL	A1
W39	1.00	6045-8780-500	RBN CA ASSY, MOTHERBD-RS232	A3
W41	1.00	7007-8780-700	W HARN ASSY, MOTHBD-PWR SUPPLY	A1
W43	1.00	7007-8783-900	WIRE HARNESS, COMPOSITE SPEAKER	A1
W46	2.00	6008-1000-011	WIRE, HOOK, TFE, 26GA, 7S, WHT/BLK	

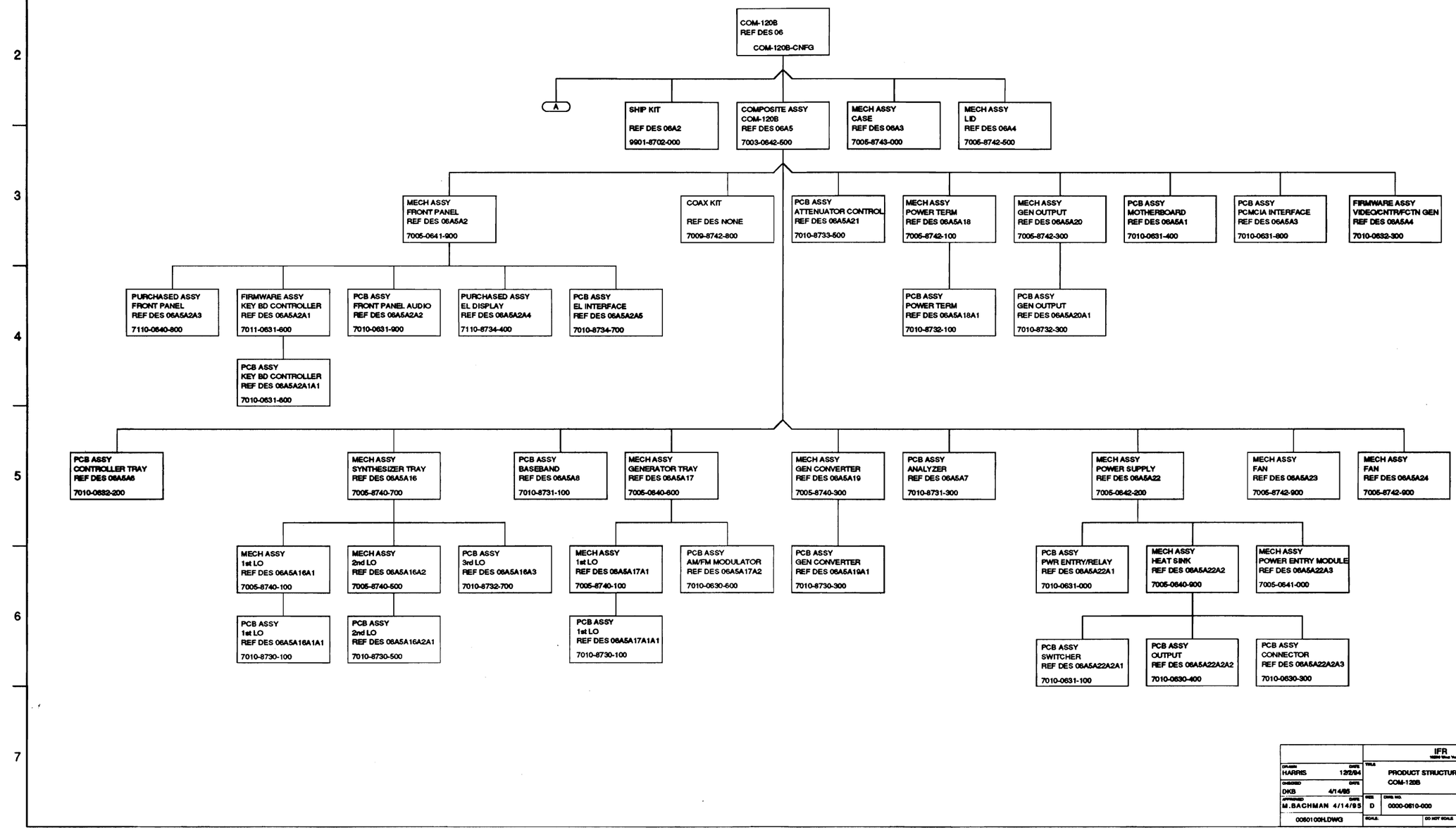

Scans by ArtekMedia © 2008

Scans by ArtekMedia © 2008

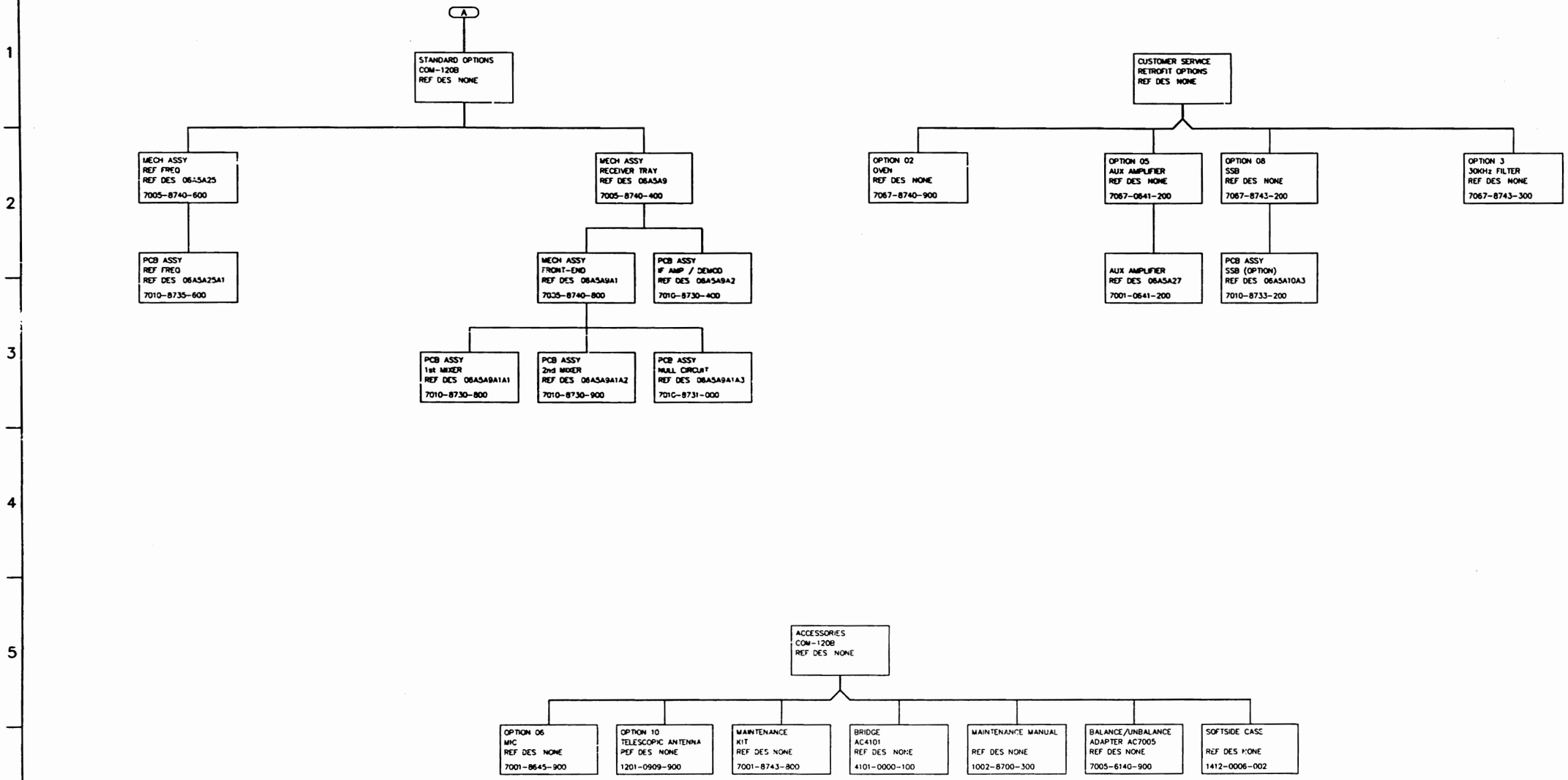

M N P Q R S T U V W X

1 2 3 4 5 6 7

A

SOFTWARE OPTIONS
COM-1208
REF DES NONE

- EASY COM B — 1009-0001-900
- EASY COM PC — 1009-0001-100
- OPTION 07 DATA GENERATOR/ BER METER — 7001-8744-500
- OPTION 09 RCC SIGNALLING — 7001-8744-600
- OPTION 11 ANALOG/DIGITAL SIGNALLING — 7001-8744-700
- OPTION 12 TRACKING GENERATOR — 7001-8744-800
- OPTION 13 GPIB — 7001-8745-600
- OPTION 14 LTR TRUNKING — 7001-8744-900
- OPTION 15 AMPS CELL SITE SIMULATOR — 7001-8745-000
- SYSTEM SOFTWARE DISKETT-COM-1208 — 7001-0642-800
- SYSTEM SOFTWARE PCMCIA COM-1208 — 7001-0642-700
- AC 1023 APPS LIBRARY — 1009-0002-800

A

HARDWARE OPTIONS
COM-1208
REF DES NONE

- OPTION 01 BATTERY — REF DES NONE — 4000-0011-000
- OPTION 02 OVEN — REF DES 06A5A26 — 7001-8740-900
  - MECH ASSY REF FREQ (OPT 02) — REF DES 06A5A26A1 — 7005-8741-900
    - PCB ASSY REF FREQ — REF DES 06A5A26A1A1 — 7010-8735-600
- OPTION 03 MECH ASSY RECEIVER TRAY — REF DES 06A5A11 — 7001-8743-300
  - MECH ASSY FRONT-END — REF DES 06A5A11A1 — 7005-8740-800
    - PCB ASSY 1st MIXER — REF DES 06A5A11A1A1 — 7010-8730-800
    - PCB ASSY 2nd MIXER — REF DES 06A5A11A1A2 — 7010-8730-900
    - PCB ASSY NULL CIRCUIT — REF DES 06A5A11A1A3 — 7010-8731-000
  - PCB ASSY IF AMP / DEMOD — REF DES 06A5A11A2 — 7010-8730-400
- OPTION 04 MECH ASSY DIGITAL TRAY — REF DES 06A5A5 — 7001-0640-700
  - FIRMWARE ASSY VIDEO/CNTR/FCTN GEN — REF DES 06A5A5A1 — 7011-0632-100
    - PCB ASSY VIDEO/CNTR/FCTN GEN — REF DES 06A5A5A1A1 — 7010-0632-100
  - PCB ASSY FCTN GEN 2 — REF DES 06A5A5A2 — 7010-0630-700
- OPTION 05 AUX AMP — REF DES 06A5A27 — 7001-0641-200
  - MECH ASSY AMPLIFIER — REF DES 06A5A27A1 — 7005-0641-200
    - PCB ASSY AUX AMPLIFIER — REF DES 06A5A27A1A1 — 7010-8733-600
- OPTION 08 MECH ASSY RECEIVER TRAY — REF DES 06A5A10 — 7001-8743-200
  - MECH ASSY FRONT-END — REF DES 06A5A10A1 — 7005-8740-800
    - PCB ASSY 1st MIXER — REF DES 06A5A10A1A1 — 7010-8730-800
    - PCB ASSY 2nd MIXER — REF DES 06A5A10A1A2 — 7010-8730-900
    - PCB ASSY NULL CIRCUIT — REF DES 06A5A10A1A3 — 7010-8731-000
  - PCB ASSY SSB (OPTION) — REF DES 06A5A10A3 — 7010-8733-200
  - PCB ASSY IF AMP / DEMOD — REF DES 06A5A10A2 — 7010-8730-400

0060125A.DWG PRODUCT STRUCTURE 0000-0612-500 REV A SHEET 3 OF 3

Scans by ArtekMedia © 2008

Scans by ArtekMedia © 2008

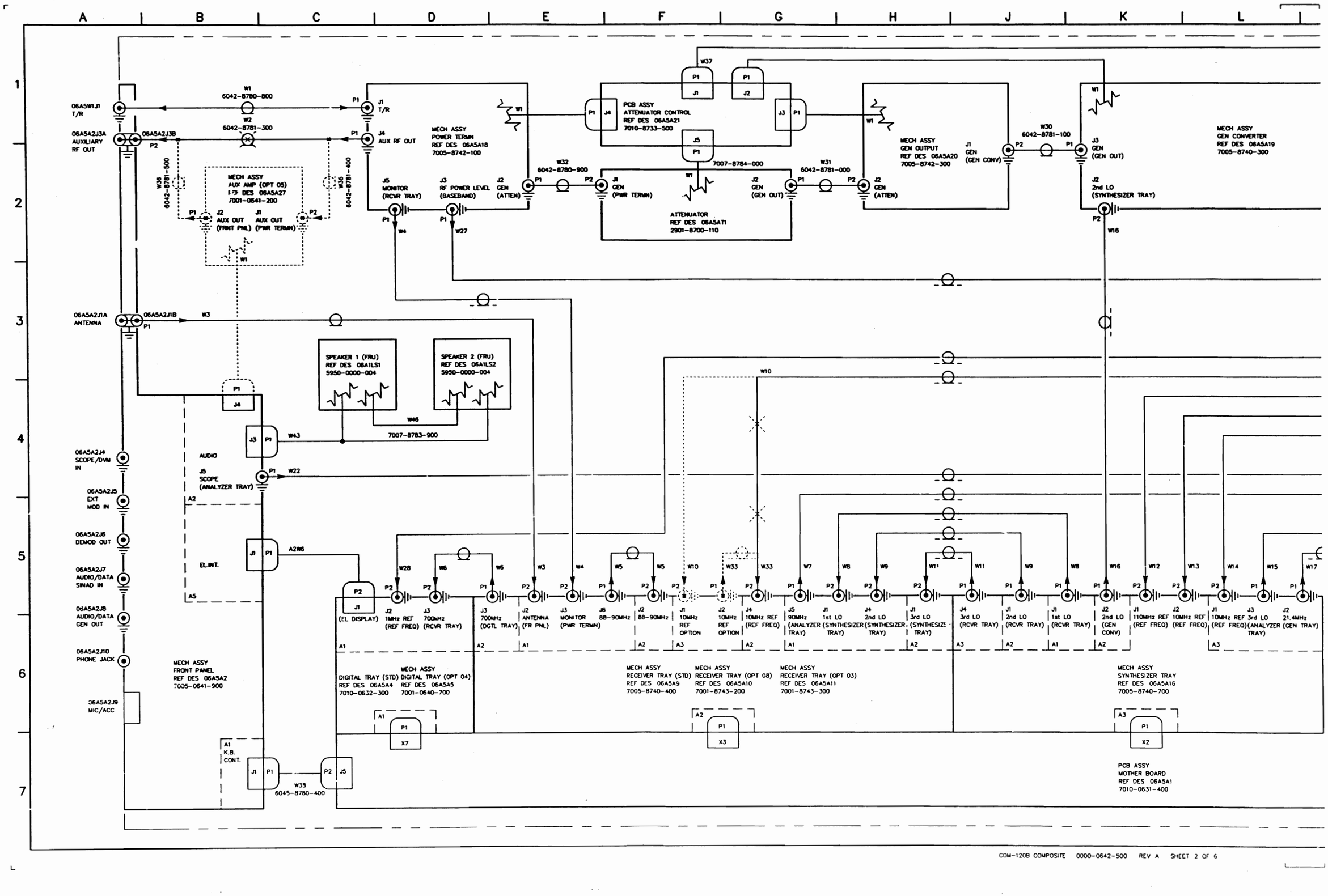

DATE	REV	CHANGE	APPROVED
02/01/96	A	RELEASE PER ECN 16881 RH	DKB

COM-120B 06A1
COMPOSITE ASSY 7003-0640-000

MECH ASSY
REF FREQ (STD)
REF DES 06A5A25
7005-8740-600

MECH ASSY
REF FREQ (OPT 02)
REF DES 06A5A26
7005-8741-900

J1 88-90MHz (GEN TRAY) — J4 1st LO (GEN TRAY)
J5 1MHz REF (DIGITAL TRAY) — J2 10MHz REF (RCVR TRAY) — J10 110MHz REF (SYNTHESIZER TRAY) — J4 10MHz REF (SYNTHESIZER TRAY) — J5 10MHz REF (SYNTHESIZER TRAY) — J3 10MHz REF (GEN TRAY) — J7 1MHz REF (ANALYZER TRAY)
J1 EXTERNAL 10MHz (REAR PANEL) — J9 10MHz (10MHz OVEN OPT 02) — J8 1MHz REF (BASEBAND TRAY)

W1 W17 W17 W18 W19 W20 W21 W21 W15 W7 W22 W24 W24 W23 W25 W25 W27 W26 W28 W10 W12 W13 W14 W20 W23 W26 W29 W34

J2 21.4MHz (GEN TRAY) — J3 21.4MHz (SYNTH-ESIZER TRAY) — J4 88-90MHz (GEN CONV) — J1 1st LO (GEN CONV) — J1 10MHz REF (REF FREQ) — J2 SWEEP OSC (ANALYZER TRAY) — J5 SWEEP OSC (GEN TRAY) — J5 3rd LO (SYNTHESIZER TRAY) — J4 90MHz (RCVR TRAY) — J7 SCOPE (FR PNL) — J3 10.7MHz — J1 10.7MHz — J2 1MHz REF (REF FREQ) — J8 DVM OUT (BASEBAND TRAY) — J3 DVM (ANALYZER TRAY) — J2 RF POWER LEVEL (PWR TERMN) — J1 1MHz REF (REF FREQ)

MECH ASSY
GENERATOR TR Y
REF DES 06A5A17
7005-0640-600

ANALYZER TRAY
REF DES 06A5A7
7010-8731-300

BASEBAND TRAY
REF DES 06A5A8
7010-8731-100

CONTROLLER TRAY
REF DES 06A5A6
7010-0632-200

PCMCIA
REF DES 06A5A3
7010-0631-800

06A5J1B — 06A5J1A EXTERNAL 10MHz (REF FREQ)

J1 10MHz (REF FREQ)

10MHz OVEN (OPT 02)
REF DES 06A5A26
7001-8740-900

MECH ASSY
FAN (FRU)
REF DES 06A5A23
7005-8742-900

MECH ASSY
POWER SUPPLY
REF DES 06A5A22
7005-0642-100

06A5A22A3J2 AC IN

06A5A22A3J1 DC IN

MECH ASSY
FAN (FRU)
REF DES 06A5A24
7005-8742-900

W41 7007-0682-500

BATTERY (FRU)(OPT 01)
REF DES 06A5BT1
4000-0011-000

6045-8780-300

7007-8780-700

W40 6045-8780-600 — W40J1 DIGITIZER GPIB

W39 6045-8780-500 — W39J1 RS-232 (MOTHERBOARD)

X1 — X5 — X4 — X6 — J4 (REF FREQ) — J1 (ATTENUATOR CONTROL) — J3 (PWR SUPPLY) — J2 (RS232)

DRAWN HARRIS	DATE 02/01/96	IFR SYSTEMS INC 10000 West York St., Wichita, Kansas 67215
CHECKED DKB	DATE 02/05/96	TITLE INTERCONNECT COM-120B COMPOSITE
APPROVED S.PIERSON	DATE 02/07/96	SIZE G DWG NO. 0000-0642-500 REV A
006425A0.DWG		SCALE: DO NOT SCALE FSCM 51190 SHEET 1 OF 6

Scans by ArtekMedia © 2008

Scans by ArtekMedia © 2008

GEN./RECV./ANALYZER BLOCK DIAGRAM

GENERATOR TRAY
REF DES 06A5A17

- TRACKING MODE / NORMAL MODE
- 89MHz BPF
- BALANCED AM MODULATION
- SYNTHESIZER 31.3MHz TO 35.3MHz 2.5kHz INCR.
- (0) +7 – +13dBm, 10MHz, W20
- AM, (G) FM
- TRACKING MODE / NORMAL MODE
- SWEEP-IN, W21
- 122.3MHz BPF
- 3rd LO FINE LOOP, W17
- 1ST LO 1300MHz TO 2289MHz 2MHz INCR. REF DES 06A5A17A1, W19
- MODULATED VCO

GENERATOR CONVERTER
REF DES 06A5A19

- (G) 155.5MHz –40dBm ±1dB (NOM) 5kHz DEV, W3G
- AMP, 1299MHz BPF, AMP
- 1st LO, 2nd LO
- W19 1454MHz (0) +5 – +10dBm
- W16 1210MHz (0) –14 – –9dBm
- (G) 88.5MHz –13dBm ±1dB 5kHz DEV, W18

GENERATOR OUTPUT
REF DES 87A5A20

- 8dB PAD, AMP, 1GHz LPF
- LEVEL DETECTOR
- RF LEVEL ALARM (TO PROCESSOR)

GEN ATTENUATOR

- (G) 155.5MHz –20dBm 5kHz DEV, W32
- 10dB 20dB 40dB 40dB, W31
- (G) 155.5MHz –10dBm (NOM) 5kHz DEV

ATTENUATOR CONTROL
REF DES 06A5A21

- DC/CONTROL, TEMP SENSOR, DC/CONTROL
- TO MOTHERBOARD
- AUX PORT ALARM

POWER TERMN
REF DES 06A5A18

- 10dB, 20dB, 30dB, 3dB
- RF LEVEL DETECTOR, POWER DETECT, TEMP SENSOR
- T/R, AUX
- W27, W4
- POWER LEVEL 0 – 4VDC
- (G) CROSSFEED 155.5MHz –50dBm

- T/R: LEVEL=–30dBm, W1
- RF OUTPUT (G) FREQ=155.5MHz GEN 1 FM=5kHz TONE=1kHz
- AUX RF OUT: LEVEL=–23dBm, W2
- W36, W35, LEVEL=+3dBm
- OPTIONAL AMP

SYNTHESIZER TRAY
REF DES 06A1A8

- (0) 10MHz +5 – +9dBm
- TCXO 10MHz, MULTIPLIER X11, 110MHz
- OPTIONAL OVEN, W34
- EXTERNAL 10MHz, W29
- (0) 10MHz +3 – +10dBm
- AMP, AMP, 10MHz
- DIVIDER ÷10, AMP, 1MHz
- W20, W14, W13, W10, W23
- W26 TO BASEBAND
- W28 TO DIGITAL TRAY
- 110MHz (0) –5 – +3dBm
- 12MHz (0) +7 – +13dBm, W13, W12
- 10MHz (0) +7 – +13dBm, W16, W14, W17
- 21.4MHz (0) –4 – +2dBm
- 1MHz 3 – 5VPP (0), SWEEP (0) –8dBm ±5dB, W23, W21

REF FREQ
REF DES 06A1A16

1st LO
REF DES 06A5A16A1
SYNTHESIZER 1300MHz – 2298MHz 2MHz INCR
AMP
1454MHz (0) +5 – +10dBm
W8 1300MHz TO 2298MHz

2nd LO
REF DES 06A5A16A2
110MHz BPF, MULTIPLIER X11, 1210MHz BPF
1210MHz, W9

3rd LO
REF DES 06A5A16A3
SYNTHESIZER COARSE LOOP 55.9–57.9MHz 2.5kHz INCR
SYNTHESIZER FINE LOOP 21.4MHz – 21.4024MHz 100Hz INCR
77.3 TO 79.3MHz, W11, W15

- RAMP CLOCK, BLANK
- RAMP GENERATOR, SWEEP VCO
- 121.3MHz TO 123.3MHz Δ=±6MHz MAX.
- ÷44
- AMP
- 89MHz ± 6MHz
- W15, 3rd LO, 78.8MHz (0) +5 – +9dBm
- W7, 89.5MHz (R) –50dBm ±4dB

RECEIVER TRAY
REF DES 06A5A9

- FRONT PANEL, ATT.
- SCOPE/DVM IN, W22
- RF INPUT (R) FREQ=150.5MHz LEVEL=–50dBm FM MOD.=5kHz/1kHz TONE
- ANTENNA INPUT, W3
- MONITOR, W4
- ANT., (R) 150.5MHz –50dBm
- 1210MHz (0) +5 – +10dBm
- 1st LO, 2nd LO, 3rd LO, 77.8MHz +5 – +10dbm (0), W7, W10
- 10MHz (0) +7 – +13dBm, W6
- 700kHz .4VPP @ RF ERR TO DIG

FRONT END
REF DES 06A5A9A1

- OVERLOAD PROTECT
- 0dB/30dB
- 1050MHz LPF
- 1st MIXER
- 1300MHz NULL CIRCUIT
- 1299MHz BPF
- AMP, 2nd MIXER, AMP, AMP
- TO CONTROLLER TRAY
- REC. ALARM
- W5, 88.5MHz –50dBm +9 – +14dB GAIN

IF AMP/DEMOD
REF DES 06A5A9A2

- 89MHz BPF
- 3rd MIXER
- AMP, 10.7MHz
- 300kHz BPF, 15kHz BPF, OPTIONAL FILTER
- AMP, AMP
- FM LIMITER, FM DETECT
- DC FM
- AUTO AGC, MANUAL AGC
- AGC NORMAL/SCAN
- AM DETECTOR

(G) GENERATOR
(R) RECIEVER
(O) OSCILLATORS

M N P Q R S T U V W X

1 2 3 4 5 6 7

AM/FM MODULATOR
REF DES 06A5A17A2

SUMMING AMP Σ
SUMMING AMP Σ
(G) FM
NORMAL MODE
GEN 1
GEN 2
DATA
DTMF
EXT. MOD.
MIC IN
LEVEL CONT.
LEVEL CONT.
LEVEL CONT.
LEVEL CONT.
1kHz TONE (G)
GEN. 2
GEN. 1
DATA
DTMF
EXT. MOD. — FROM FRONT PANEL
MIC. IN — FROM FRONT PANEL
(G) FM
SUMMING AMP Σ
FM PM
INT MODULATION

DIGITAL TRAY
REF DES 06A5A4
FUNCTION GEN.2 GEN. 2
FUNCTION GEN.1 GEN. 1
TONE DECODER AF COUNTER

CONTROLLER TRAY
REF DES 06A5A6
DATA ENCODER
DATA DECODER
DIGITIZER

BASEBAND
REF DES 06A5A8
OUT
SUMMING NETWORK Σ
1kHz TONE (R)
SINAD DISTOR. METER
1KHz NOTCH FILTER
RESIDUAL
ALC
DTMF/SINAD
TONE DECODER / AF COUNTER
DTMF GENERATOR
DTMF DECODER
DATA DECODER
MOD METERS
C-FILTER
FILTER BANK
300Hz HPF
4KHz HPF
300Hz LPF
4KHz LPF
20KHz LPF
C-WEIGHTED BPF
RMS AC METER
1kHz TONE
REC. MODE
GEN MODE
FM/AM/PM MODULATION METERS
12 BIT A/D CONVERTER
PEAK DETECTORS
DEVIATION METER =5kHz PEAK (R)

FRONT PANEL
REF DES 06A5A2
AUDIO/DATA GEN OUT
AUDIO/DATA IN
AUDIO/DATA IN (GEN. MODE)
(R)
DETECTOR OUT (REC. MODE)
INT. MOD. (GEN. MODE)
EXTERNAL MOD IN

SYNTHESIZER 44.0MHz
10.7MHz
SELECT BPF
3MHz
300kHz
30kHz
3kHz
300Hz
LOG AMP.+ AM DETECTOR
ANALYZER
REF DES 06A5A7
ANALYZER
SCOPE-IN
SCALING NETWORK
VERTICAL OFFSET
A/D CONVERTER
SAMPLE START
ACQUIRE DATA
DATA
BASEBAND-IN/SCOPE
(R) 100Hz
W22
SCOPE/DVM UP TO ±200VRMS
700kHz (R) .4VPP @1kΩ LOAD
RF ERROR COUNTER TO DIGITAL TRAY

BASEBAND SCOPE SELECTOR
GEN MODE
EXT. MODULATION
1KHz NOTCH RESIDUAL
AUDIO/DATA IN
INT. MODULATION
RECV. MODE
MOD METER
AF DECODE/SINAD
AF COUNTER
DATA DECODER
1KHz NOTCH RESIDUAL
DETECTOR OUT
DEMOD OUT CONNECTOR
RF POWER
AUDIO/DATA GEN OUT
POWER LEVEL 0 – 4VDC
W27
RF POWER METER

GEN MODE
INT. MODULATION
AUDIO/DATA IN
C-FILTER
SPEAKER SELECTOR
TO SPEAKERS 1kHz TONE (G),(R)
(WIDE BAND)
DETECTOR OUT
C FILTER OUT
AUDIO/DATA GEN OUT
RECV. MODE
DETECTOR OUT
C-FILTER OUT
MOD METER
AF DECODE/SINAD
AF COUNTER
DATA DECODER
DEMOD OUT 1kHz TONE (R)

FM DETECTOR
AUTO ZERO
INTEGRATOR
AC FM
1kHz TONE (R)
FM DEMOD
PM DEMOD
D/A
CONTROLLER SERIAL DATA
AM DEMOD
RECEIVED LEVEL
10MHz
10MHz +7 – +13dBm (O)
W33
AMP
BFO 700kHz
SSB OPTION
REF DES 06A5A10A3
700kHz
SSB DEMOD
FM
PM
SSB
AM
(R)
(REC MODE) DETECTOR OUT
(GEN MODE) INT MOD
REC. LEVEL
SQUELCH LED
SERIAL DATA INDICATING SQUELCH POTENTIOMETER POSITION (FRONT PANEL)
D/A
TO FRONT PANEL

COM-1208 COMPOSITE 0000-0642-500 REV A SHEET 4 OF 6

Scans by ArtekMedia © 2008

Scans by ArtekMedia © 2008

CONTROL BLOCK DIAGRAM

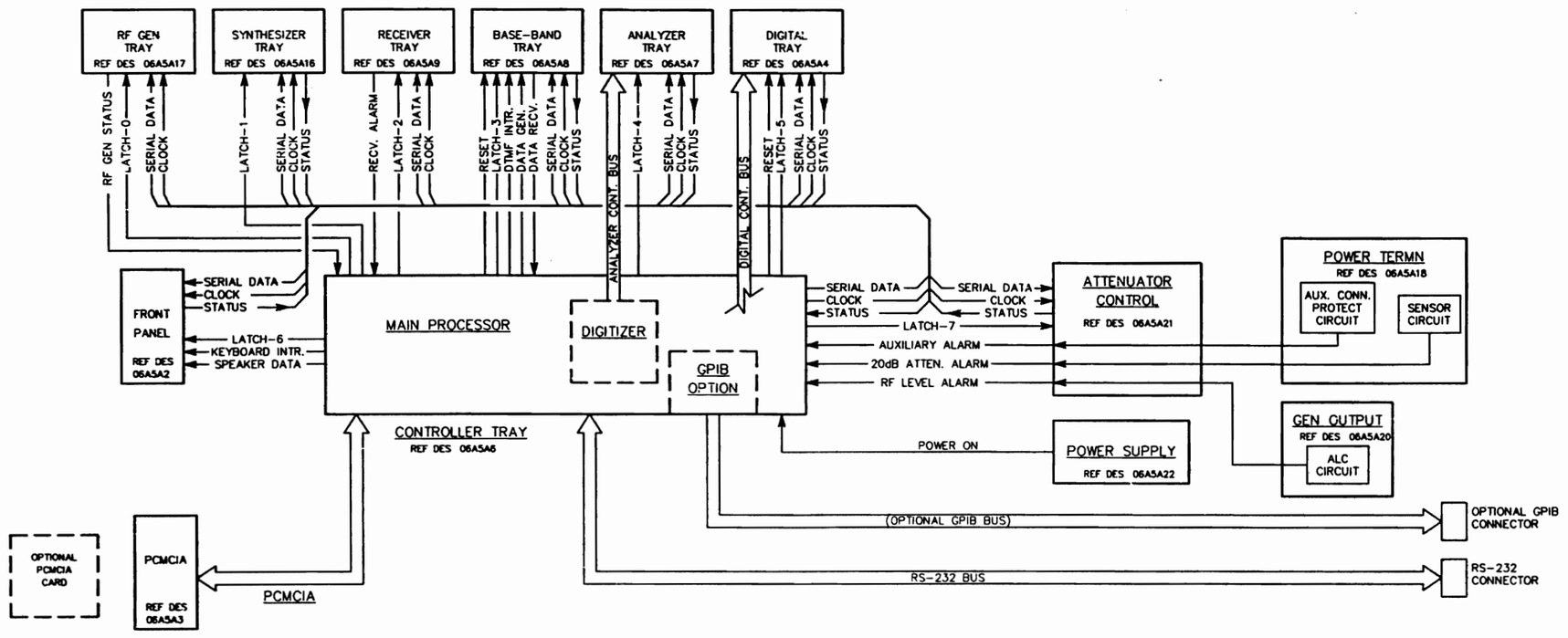

METERS (INDEPENDENT METERS) BLOCK DIAGRAM

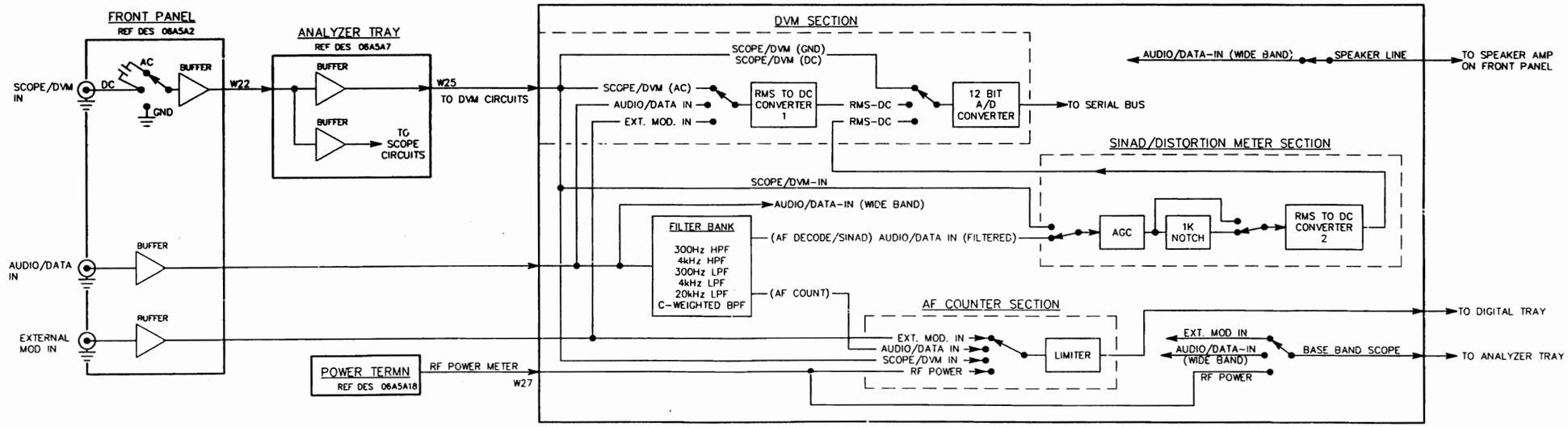

COAX DEFINITION TABLE

COAX #	FUNCTION	SIGNAL FREQUENCY	SIGNAL LEVEL
W1	T/R TO POWER TERMN I/O CONNECTION	0.25MHz TO 1000MHz	−137dBm TO −20dBm (SIGNAL OUT) −30dBm TO +53dBm (SIGNAL IN)
W2	POWER TERMN TO AUX OUTPUT SIGNAL	0.25MHz TO 1000MHz	−137dBm TO +13dBm (SIGNAL OUT)
W3	FRONT PANEL ANT CONNECTOR TO RECEIVER	0.25MHz TO 1000MHz	−137dBm TO 0dBm (NOMINAL INPUT SIGNAL) +40dBm (MAX LEVEL)
W4	MONITOR CABLE−CROSS FEED FROM POWER TERMN TO RECEIVER	0.25MHz TO 1000MHz	−137dBm TO −7dBm
W5	RECEIVER JUMPER	88MHz TO 90MHz	+9dB TO +14dB GAIN (FROM ANT INPUT W3)
W6	700kHz FROM RECEIVER TO RF ERROR METER ON DIGITAL TRAY	700kHz	0.4Vpp INTO 1kΩ LOAD
W7	RECEIVER TO ANALYZER	88MHz TO 90MHz	0dB ±4dB GAIN (FROM ANT INPUT W3)
W8	FIRST LO FROM SYNTHESIZER TRAY TO RECEIVER TRAY	1300MHz TO 2298MHz	+5dBm TO +10dBm
W9	SECOND LO FROM SYNTHESIZER TRAY TO RECEIVER TRAY	1210MHz	+5dBm TO +10dBm
W10	10MHz REF FROM REF FREQ TO RECEIVER	10MHz	+7dBm TO +13dBm
W11	THIRD LO FROM SYNTHESIZER TRAY TO RECEIVER TRAY	77.3MHz TO 79.3MHz	+5dBm TO +10dBm
W12	110MHz REF FROM REF FREQ TO SYNTHESIZER TRAY	110 MHz	−5dBm TO +3dBm
W13	10MHz REF FROM REF FREQ TO SYNTHESIZER TRAY	10MHz	+7dBm TO +13dBm
W14	10MHz REF FROM REF FRQ TO SYNTHESIZER TRAY	10MHz	+7dBm TO +13dBm
W15	THIRD LO FROM SYNTHESIZER TRAY TO ANALYZER	77.3MHz TO 79.3MHz	+5dBm TO +9dBm
W16	SECOND LO FROM SYNTHESIZER TRAY TO GEN CONVERTER	1210MHz	−14dBm TO −9dBm
W17	21.4MHz FROM SYNTHESIZER TRAY TO GEN TRAY	21.4MHz TO 21.4024MHz INC.=100Hz	−4dBm TO +2dBm
W18	88MHz FROM GENERATOR TRAY TO GEN CONVERTER	88MHz TO 90MHz	−13dBm ±1dB

COAX #	FUNCTION	SIGNAL FREQUENCY	SIGNAL LEVEL
W19	FIRST LO FROM GENERATOR TRAY TO GEN CONVERTER	1300MHz TO 2298MHz	+5dBm TO +10dBm
W20	10MHz REF FROM REF FREQ TO GENERATOR TRAY	10MHz	+7dBm TO +13dBm
W21	SWEEP OSC FROM ANALYZER TO GENERATOR TRAY	121.3MHz TO 123.3MHz CENTER FREQ. UP TO ±6MHz SWEEP	−8dBm ±5dB
W22	SCOPE/DVM CONNECTION FROM FRONT PANEL	DC TO 20kHz	UP TO ±4V
W23	1MHz REF FROM REF FREQ TO ANALYZER	1MHz	3.0Vpp TO 5Vpp
W24	ANALYZER JUMPER CABLE	10.7MHz	APP. 20dB GAIN (FROM 88−90MHz INPUT W7)
W25	DVM LEVEL FROM ANALYZER TO BASEBAND TRAY	DC TO 20kHz	UP TO ±4V
W26	1MHz REF FROM REF FREQ TO BASEBAND TRAY	1MHz	3.0Vpp TO 5Vpp
W27	POWER LEVEL FROM POWER TERMN TO BASEBAND TRAY	DC	0 TO +4.0VDC NOMINAL
W28	1MHz REFERENCE TO DIGITAL TRAY	1MHz	3.0Vpp TO 5.0Vpp
W29	EXTERNAL 10MHz FROM REAR PANEL TO REF FREQ	10MHz	+3dBm TO +10dBm
W30	COAX CABLE FROM GEN CONVERTER TO GEN OUTPUT	0.25MHz TO 1000MHz	−40dB ±1dB
W31	RF OUTPUT FROM GEN OUTPUT TO ATTENUATOR	0.25MHz TO 1000MHz	−10dBm NOMINAL
W32	RF OUTPUT FROM ATTENUATOR TO POWER TERM	0.25MHz TO 1000MHz	−10dBm TO −127dBm
W33	OPTIONAL JUMPER TO RECEIVER TRAY (SSB OPTION) 10MHz REF	10MHz	+7dBm TO +13dBm
W34	OPTIONAL 10MHz REF FROM 10MHz OVEN TO REF FREQ	10MHz	+7dBm ±2dB
W35	OPTIONAL INPUT FROM POWER TERMN TO AUX AMP	0.25MHz TO 1000MHz	−137dBm TO −13dBm
W36	OPTIONAL OUTPUT FROM AUX AMP TO FRONT PANEL	0.25MHz TO 1000MHz	−137dBm TO +13dBm

Scans by ArtekMedia © 2008

Scans by ArtekMedia © 2008

DATE	REV	CHANGE	APVD
2/1/96	A	RELEASE PER ECN 16881 RH	DKB

WIRE RUNNING LIST				
DESG	FROM	TO	COLOR	AWG
W43W1	P1-01	LS1 (+)	WHT	26
W43W2	P1-02	LS2 (-)	BLK	26
W46	LS1 (-)	LS2 (+)	WHT/BLK	26

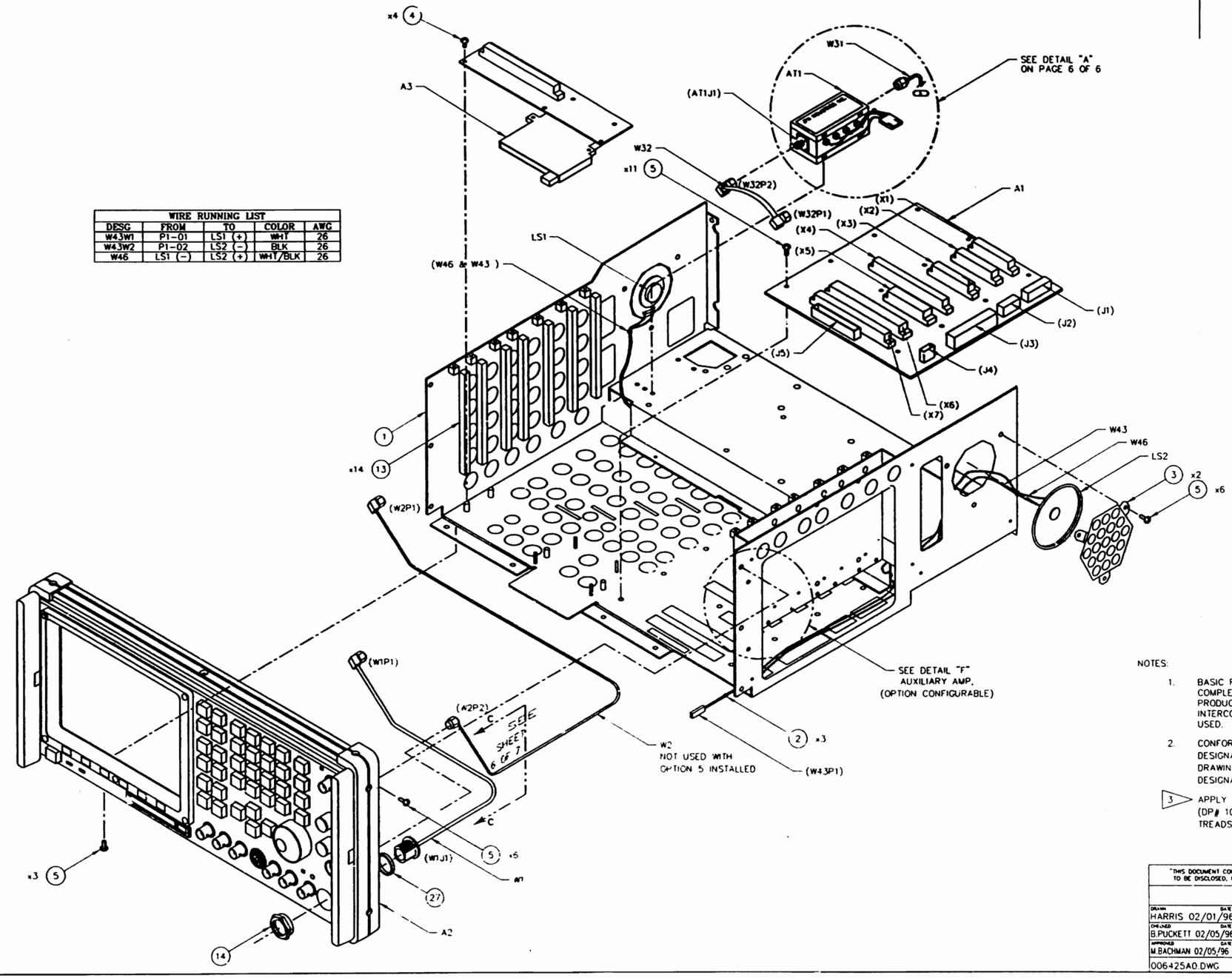

NOTES:

1. BASIC REFERENCE DESIGNATORS SHOWN, FOR COMPLETE DESIGNATOR PREFIXES REFER TO PRODUCT STRUCTURE, AND SYSTEM INTERCONNECT FOR APPLICATIONS WHERE USED.
2. CONFORMABLE COAX W AND P DESIGNATOR NOT SHOWN FOR DRAWING CLARITY (TAG# = W DESIGNATOR)
3. APPLY ANTI-SIEZE COMPOUND (DP# 1050-0000-233) TO SCREW TREADS PRIOR TO ASSEMBLY

"THIS DOCUMENT CONTAINS PROPRIETARY INFORMATION OF IFR, INC. AND IS NOT TO BE DISCLOSED, REPRODUCED, OR PUBLISHED WITHOUT IFR'S APPROVAL"

IFR SYSTEMS INC
10200 West York St. Wichita, Kansas 67215

DRAWN HARRIS 02/01/96	TITLE	COMPOSITE ASSY, COM-120B	
CHECKED B.PUCKETT 02/05/96			
APPROVED M.BACHMAN 02/05/96	SIZE D	DWG NO 7003-0642-500	REV A
006425A0.DWG	PLOT SCALE 1=1	SCALE 1=1	CAGE 51190 SHEET 1 OF 7

		SEE SHEET 1

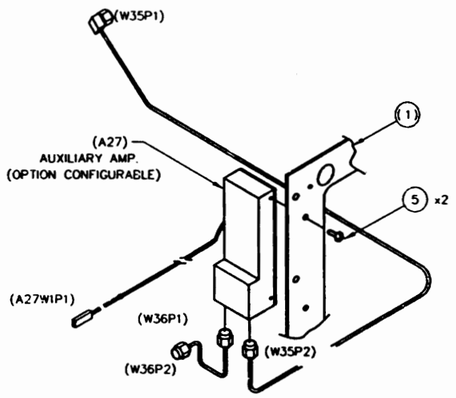

DETAIL "F"

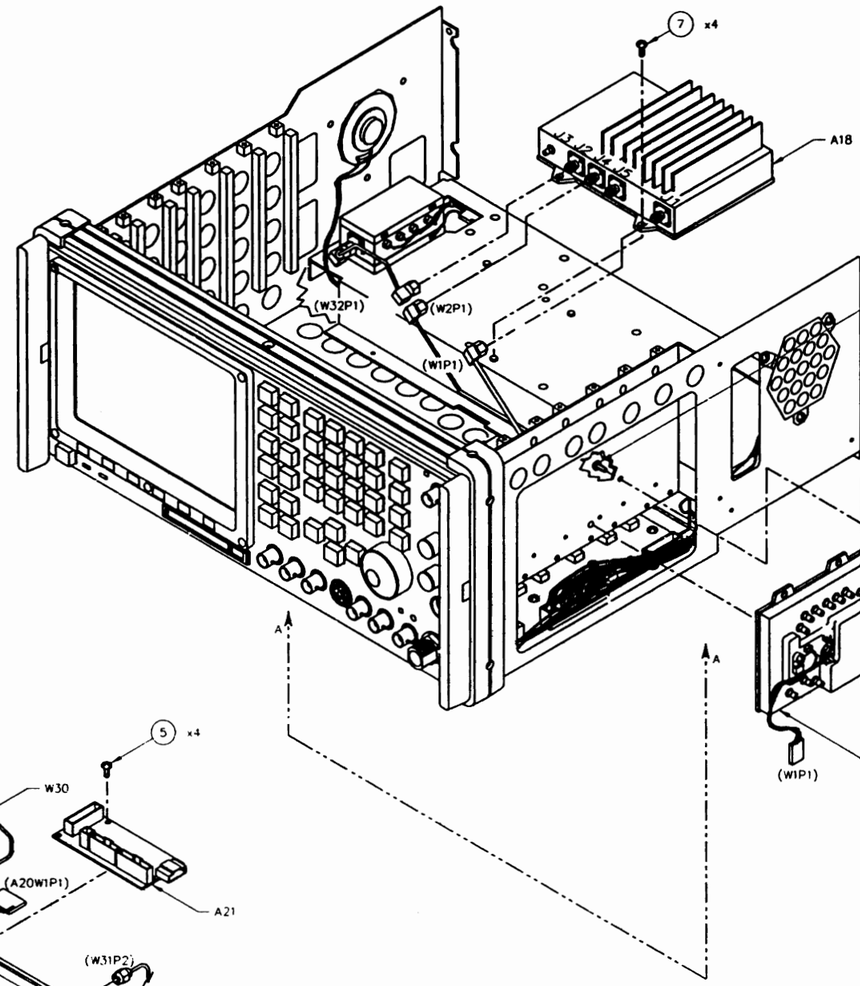

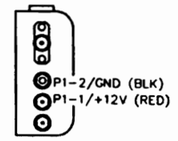

VIEW "B-B"
SCALE 2X

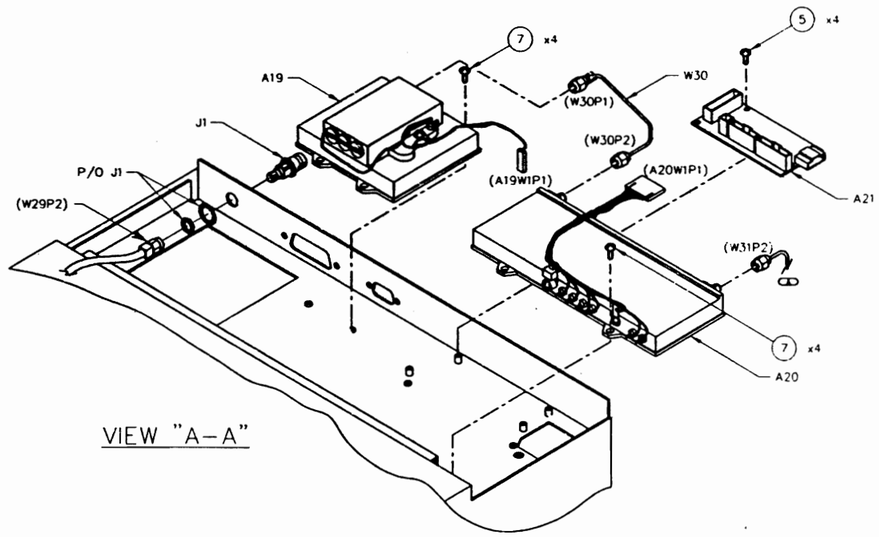

VIEW "A-A"

"THIS DOCUMENT CONTAINS PROPRIETARY INFORMATION OF IFR, INC. AND IS NOT TO BE DISCLOSED, REPRODUCED, OR PUBLISHED WITHOUT IFR'S APPROVAL."

		IFR SYSTEMS INC	
DRAWN HARRIS 02/01/96	TITLE	COMPOSITE ASSY, COM-120B	
CHECKED J PUCKETT 02/05/96			
ENGINEERING M BACHMAN 02/05/06	SIZE D	DWG NO 7003-0642-500	REV A
006425A0.DWG	PLOT SCALE 2=1	SCALE 1=1	CAGE 51190 SHEET 2 of 7

Scans by ArtekMedia © 2008

Scans by ArtekMedia © 2008

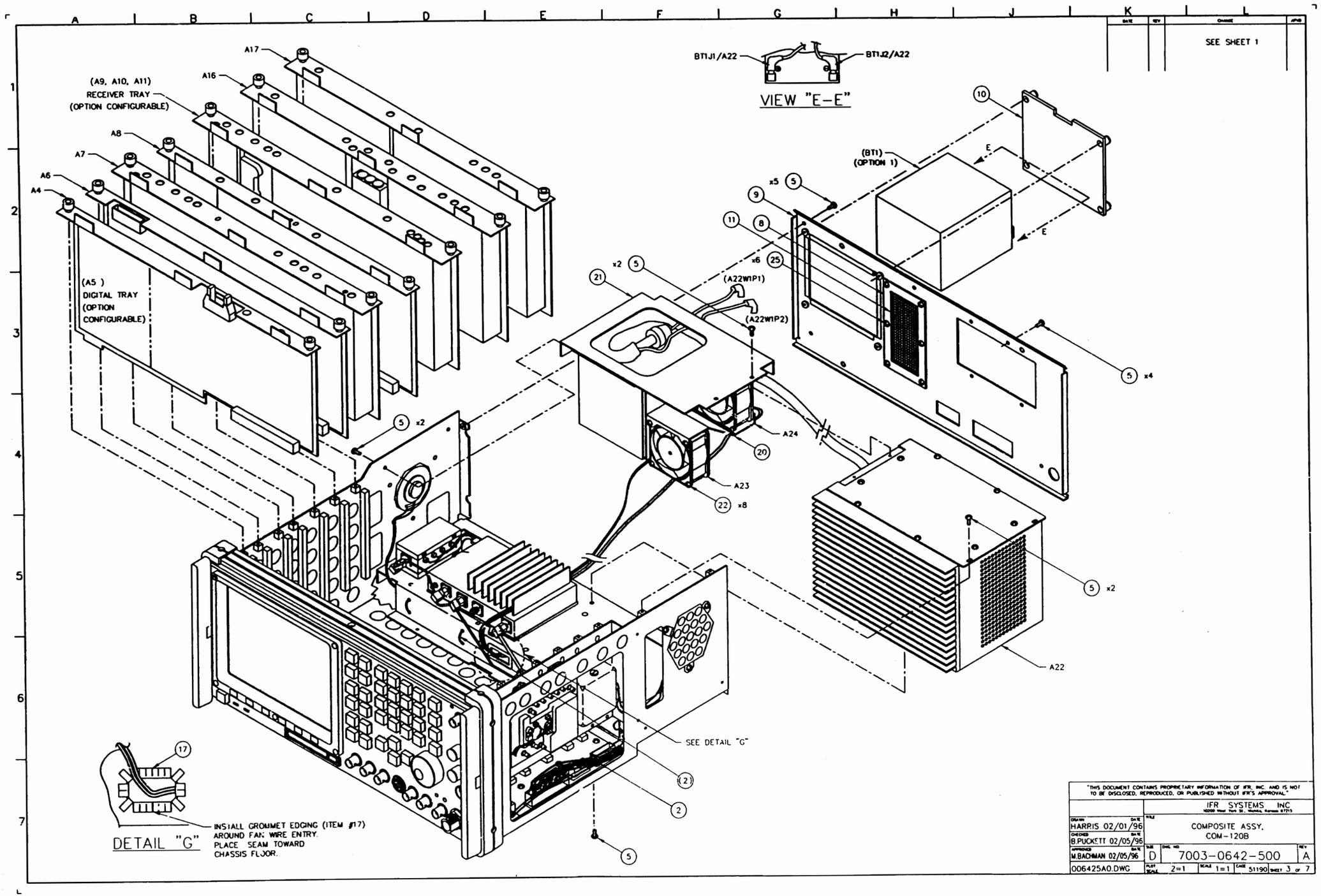

"THIS DOCUMENT CONTAINS PROPRIETARY INFORMATION OF IFR, INC. AND IS NOT TO BE DISCLOSED, REPRODUCED, OR PUBLISHED WITHOUT IFR'S APPROVAL"

IFR SYSTEMS INC.
10200 West York St., Wichita, Kansas 67215

DRAWN HARRIS 02/01/96	TITLE	COMPOSITE ASSY, COM-120B
CHECKED B.PUCKETT 02/05/96		
APPROVED M.BACHMAN 02/05/96	SIZE D	DWG NO 7003-0642-500 REV A
006425A0.DWG	PLOT SCALE 2=1	SCALE 1=1 CAGE 51190 SHEET 3 OF 7

DATE	REV	CHANGE	APVD
		SEE SHEET 1	

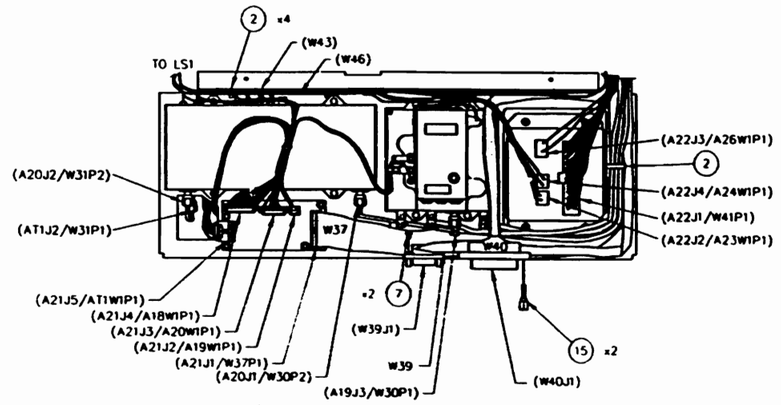

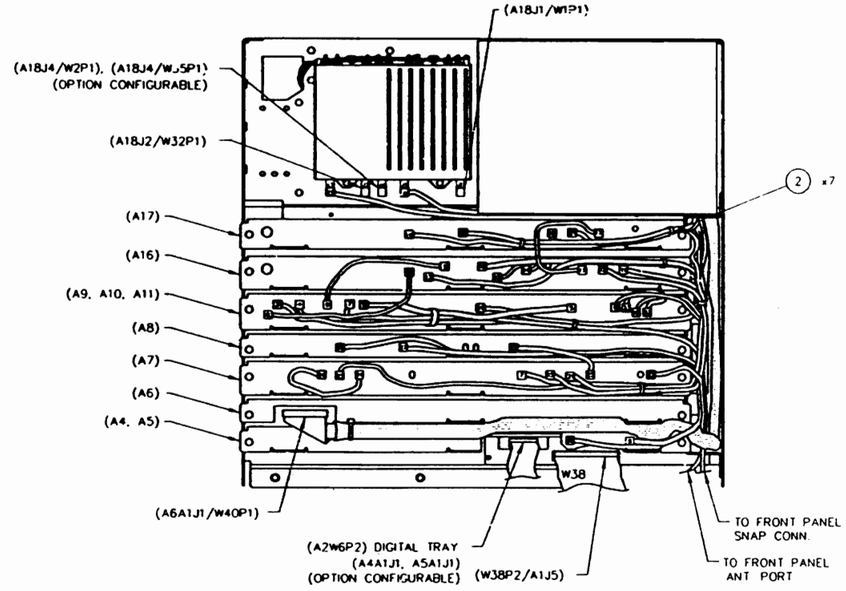

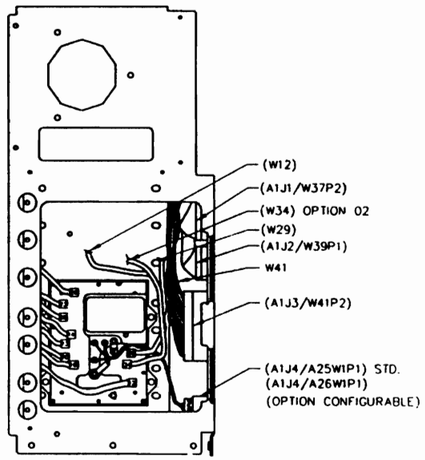

"THIS DOCUMENT CONTAINS PROPRIETARY INFORMATION OF IFR, INC. AND IS NOT TO BE DISCLOSED, REPRODUCED, OR PUBLISHED WITHOUT IFR'S APPROVAL."

	IFR SYSTEMS, INC. 10200 West York St., Wichita, Kansas 67215
DRAWN HARRIS 02/01/96	TITLE COMPOSITE ASSY, COM-120B
CHECKED B PUCKETT 02/05/96	
APPROVED M BACHMAN 02/05/96	SIZE D · DWG NO 7003-0642-500 · REV A
006425A0.DWG	PLOT SCALE 2=1 · SCALE 1=1 · CAGE 51190 · SHEET 4 OF 7

Scans by ArtekMedia © 2008

Scans by ArtekMedia © 2008

SEE SHEET 1

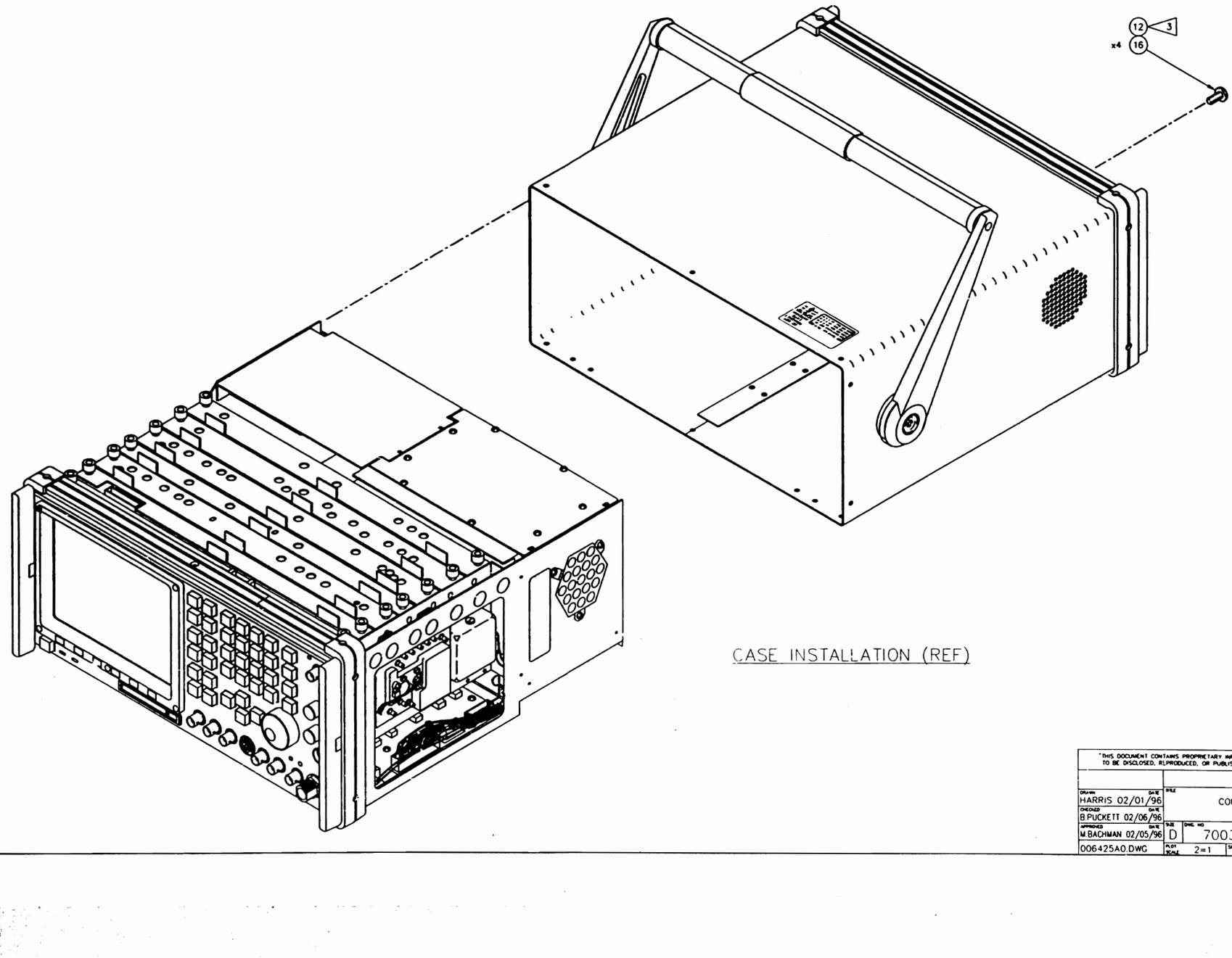

CASE INSTALLATION (REF)

"THIS DOCUMENT CONTAINS PROPRIETARY INFORMATION OF IFR, INC. AND IS NOT TO BE DISCLOSED, REPRODUCED, OR PUBLISHED WITHOUT IFR'S APPROVAL"

IFR SYSTEMS, INC.

DRAWN HARRIS 02/01/96	TITLE	COMPOSITE ASSY. COM-1208	
CHECKED B.PUCKETT 02/06/96			
APPROVED M.BACHMAN 02/05/96	SIZE D	DWG NO 7003-0642-500	REV A
006425A0.DWG	PLOT SCALE 2=1	SCALE 1=1 CAGE 51190	SHEET 5 of 7

DATE	REV	CHANGE	APVD
		SEE SHEET 1	

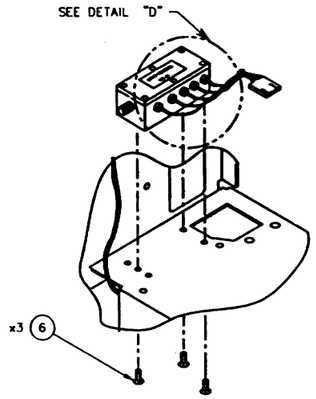

DETAIL "A"

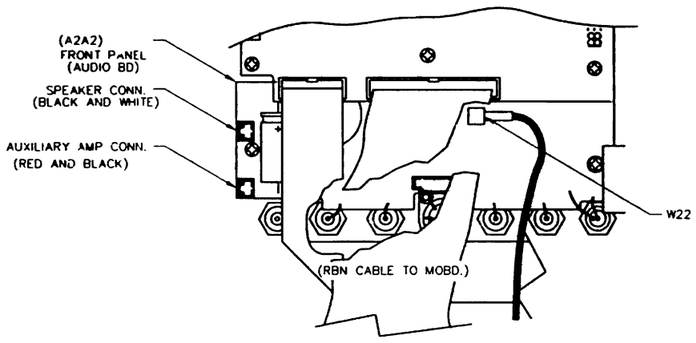

VIEW "C-C"

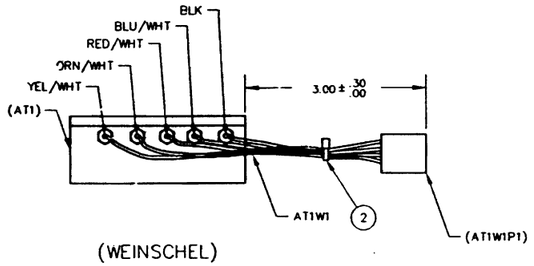

(WEINSCHEL)

WIRE RUNNING LIST				
DESG	FROM	TO	COLOR	AWG
AT1W1W1	P1-01	10	RED/WHT	26
AT1W1..2	P1-02	20	ORN/WHT	26
AT1W1W3	P1-03	40	YEL/WHT	26
AT1W1W4	P1-04	40	BLU/WHT	26
AT1W1W5	P1-05	GND	BLK	26

DETAIL "D"

"THIS DOCUMENT CONTAINS PROPRIETARY INFORMATION OF IFR, INC. AND IS NOT TO BE DISCLOSED, REPRODUCED, OR PUBLISHED WITHOUT IFR'S APPROVAL"

IFR SYSTEMS INC
10200 West York St., Wichita, Kansas 67215

DRAWN	DATE	TITLE	
HARRIS	02/01/96	COMPOSITE ASSY. COM-120B	
CHECKED	DATE		
B.PUCKETT	02/05/96		
APPROVED	DATE	SIZE D	DWG NO 7003-0642-500 REV A
M.BACHMAN	02/05/96		
006425A0.DWG		PLOT SCALE 2=1	SCALE 1=1 CAGE 51190 SHEET 6 OF 7

Scans by ArtekMedia © 2008

Scans by ArtekMedia © 2008

SEE SHEET 1

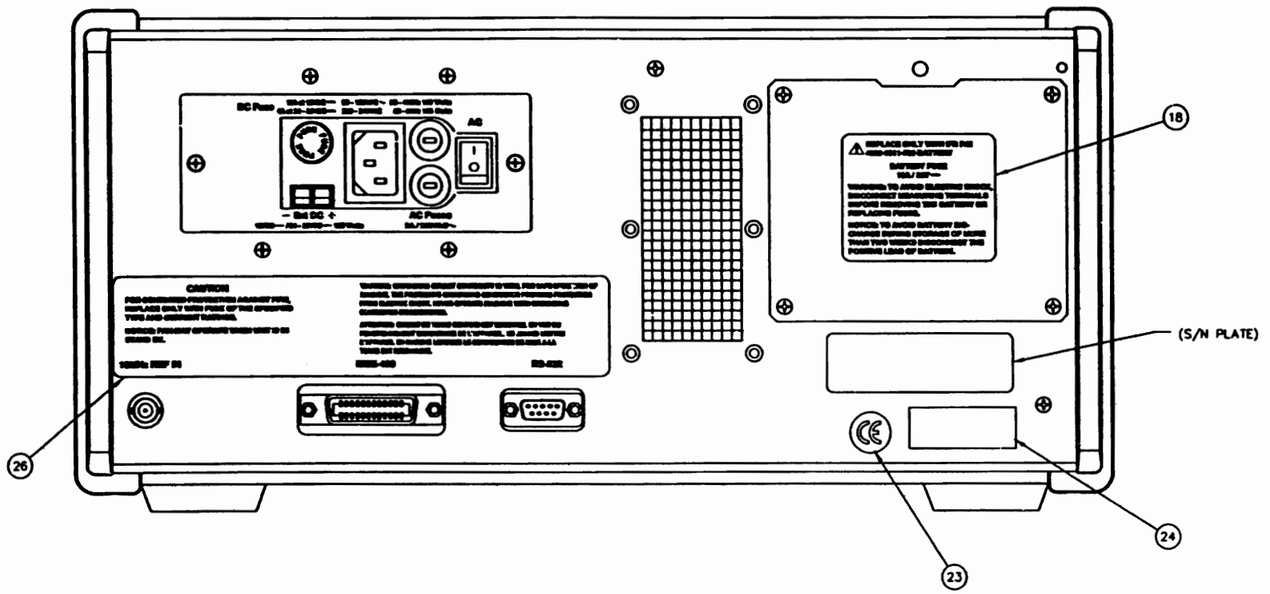

"THIS DOCUMENT CONTAINS PROPRIETARY INFORMATION OF IFR, INC. AND IS NOT TO BE DISCLOSED, REPRODUCED, OR PUBLISHED WITHOUT IFR'S APPROVAL."

IFR SYSTEMS INC.

DRAWN HARRIS 02/01/96	TITLE: COMPOSITE ASSY. COM-120B		
CHECKED B.PUCKETT 02/05/96			
APPROVED M.BACHMAN 02/05/96	SIZE D	DWG NO 7003-0642-500	REV A
006425A0.DWG	PLOT SCALE 1=1	SCALE 1=1	CAGE 51190 SHEET 7 of 7

DATE	REV	CHANGE	APVD
10/14/92	A	DESIGN RELEASE R DOLL	DKB
12/15/92	A1	INC FMY-085	DKB
12/22/92	A2	INC FMY-091	DKB
5/4/93	A3	PROD REL PER ECN 15564 RH	DKB
11/5/93	A4	INC ECN 15818 RH	DC
11/5/93	A5	INC ECN 15818A RH	DC
05-13-94	A6	INC ECN 16086 BP	BM
08-22-94	A7	INC ECN 16225 BP	BM
07/06/95	B	INC ECN 16555 BP	BM
9/26/95	C	INC ECN 16624 BP	BM
10/12/95	D	INC ECN #16570 RH	BM
5/9/96	E	INC ECN #17020 WB	DKB

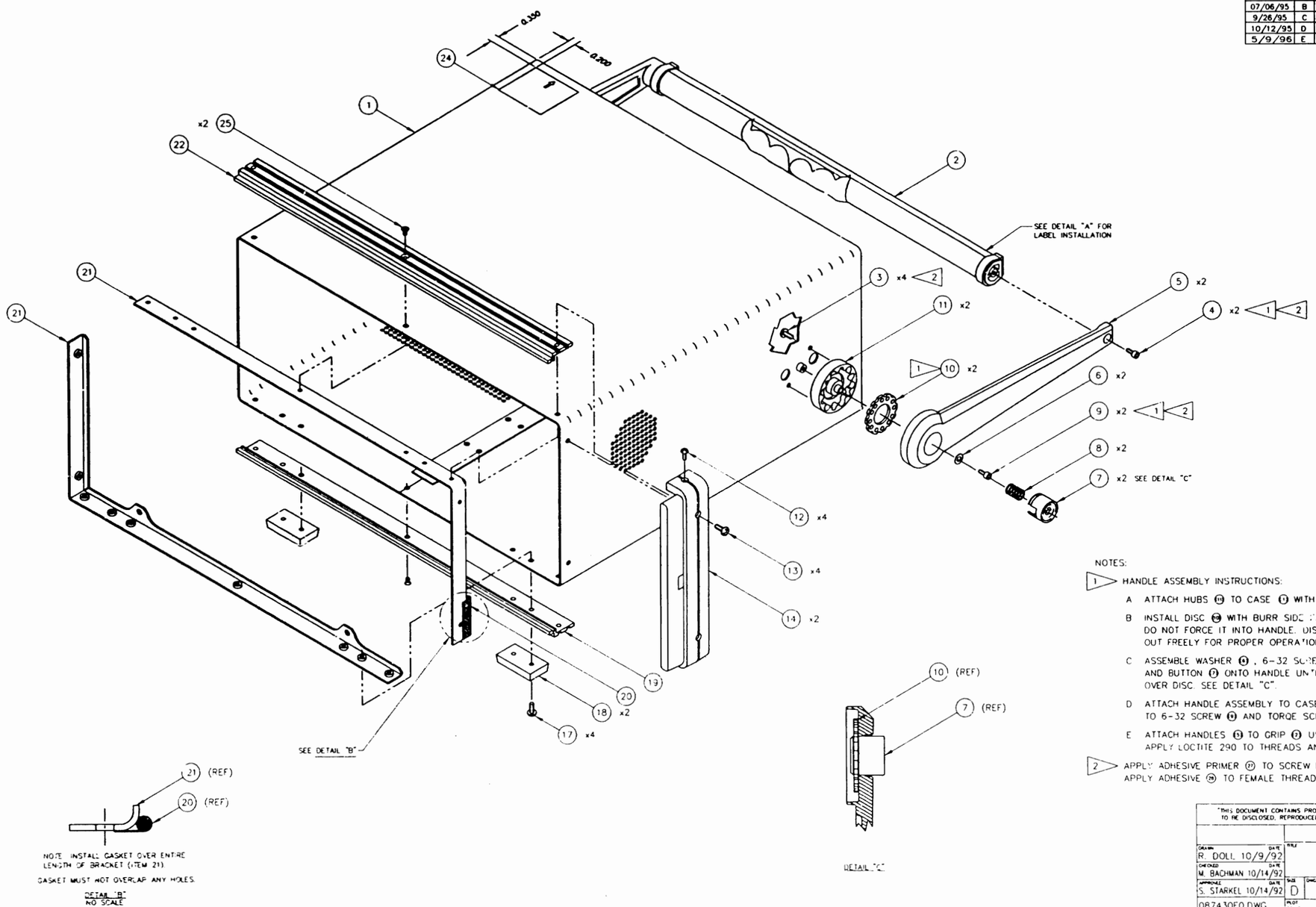

NOTES:

1. HANDLE ASSEMBLY INSTRUCTIONS:
   - A ATTACH HUBS (14) TO CASE (1) WITH 6-32 SCREWS (3).
   - B INSTALL DISC (18) WITH BURR SIDE FACING INTO HANDLE (6). DO NOT FORCE IT INTO HANDLE. DISC MUST FALL IN AND OUT FREELY FOR PROPER OPERATION OF TILT MECHANISM.
   - C ASSEMBLE WASHER (9), 6-32 SCREW (8), SPRING (8), AND BUTTON (7) ONTO HANDLE UNTIL BUTTON SNAPS OVER DISC. SEE DETAIL "C".
   - D ATTACH HANDLE ASSEMBLY TO CASE. APPLY LOCTITE 290 TO 6-32 SCREW (8) AND TORQE SCREWS TO 15 IN LBS.
   - E ATTACH HANDLES (5) TO GRIP (7) USING 8-32 (4). APPLY LOCTITE 290 TO THREADS AND TORQUE TO 30 IN LBS.
2. APPLY ADHESIVE PRIMER (17) TO SCREW PRIOR TO ASSEMBLY. APPLY ADHESIVE (16) TO FEMALE THREAD JUST PRIOR TO ASSEMBLY.

NOTE: INSTALL GASKET OVER ENTIRE LENGTH OF BRACKET (ITEM 21). GASKET MUST NOT OVERLAP ANY HOLES.

DETAIL "B" NO SCALE

DETAIL "C"

"THIS DOCUMENT CONTAINS PROPRIETARY INFORMATION OF IFR, INC. AND IS NOT TO BE DISCLOSED, REPRODUCED, OR PUBLISHED WITHOUT IFR'S APPROVAL."

IFR SYSTEMS, INC.

DRAWN R. DOLL 10/9/92	TITLE	MECH ASSY, CASE COM-120A
CHECKED M. BACHMAN 10/14/92		
APPROVED S. STARKEL 10/14/92	SIZE D	DWG NO 7005-8743-000 REV E
087430E0.DWG	PLOT SCALE 5=1	SCALE 1=1 CAGE 51190 SHEET 1 OF 1

Scans by ArtekMedia © 2008

Scans by ArtekMedia © 2008

DATE	REV		APVD
11-18-92	A	DESIGN RELEASE MH	DKB
3/24/93	B	INC FMY-122 RH	DKB
5/3/93	C	PROD REL PER ECN 15564 RH	DKB
08/11/93	D	INC ECN 15724 BP	BM
9-19-94	E	INC ECN 16141 BP	BM
9/25/94	F	INC ECN 16142 RLD	DKB

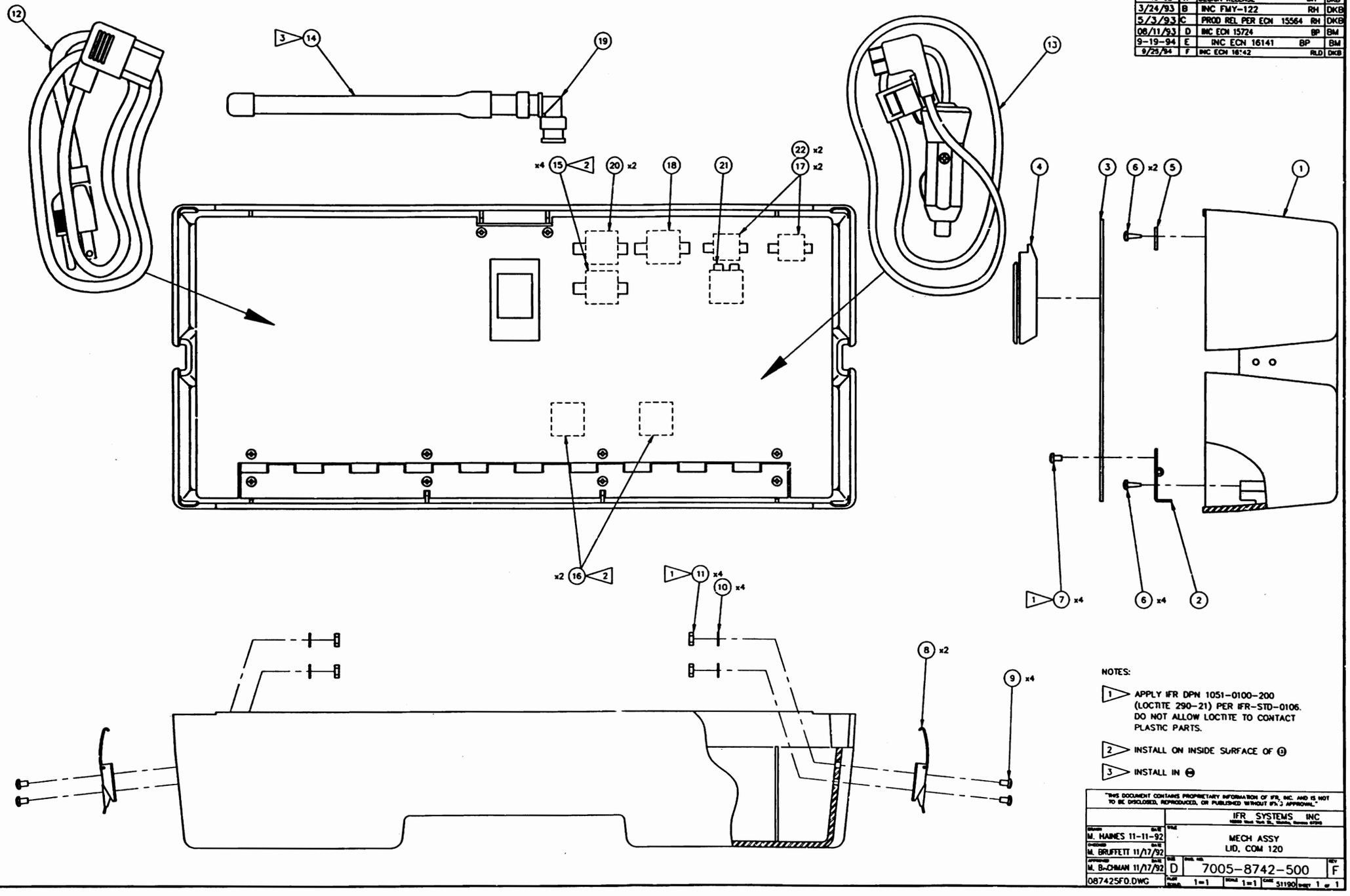

NOTES:

1. APPLY IFR DPN 1051-0100-200 (LOCTITE 290-21) PER IFR-STD-0106. DO NOT ALLOW LOCTITE TO CONTACT PLASTIC PARTS.
2. INSTALL ON INSIDE SURFACE OF ⑧
3. INSTALL IN ⑧

"THIS DOCUMENT CONTAINS PROPRIETARY INFORMATION OF IFR, INC. AND IS NOT TO BE DISCLOSED, REPRODUCED, OR PUBLISHED WITHOUT IFR, INC APPROVAL."

IFR SYSTEMS INC

M. HAINES 11-11-92
M. BRUFFETT 11/17/92
M. B-CHMAN 11/17/92
087425F0.DWG

MECH ASSY
LID, COM 120

SIZE D | DWG. NO. 7005-8742-500 | REV F

PLOT SCALE 1=1 | SCALE 1=1 | CAGE 51190 | SHEET 1 OF 1

DATE	REV		APVD
02/01/96	A	RELEASE PER ECN #16881 RH	DKB

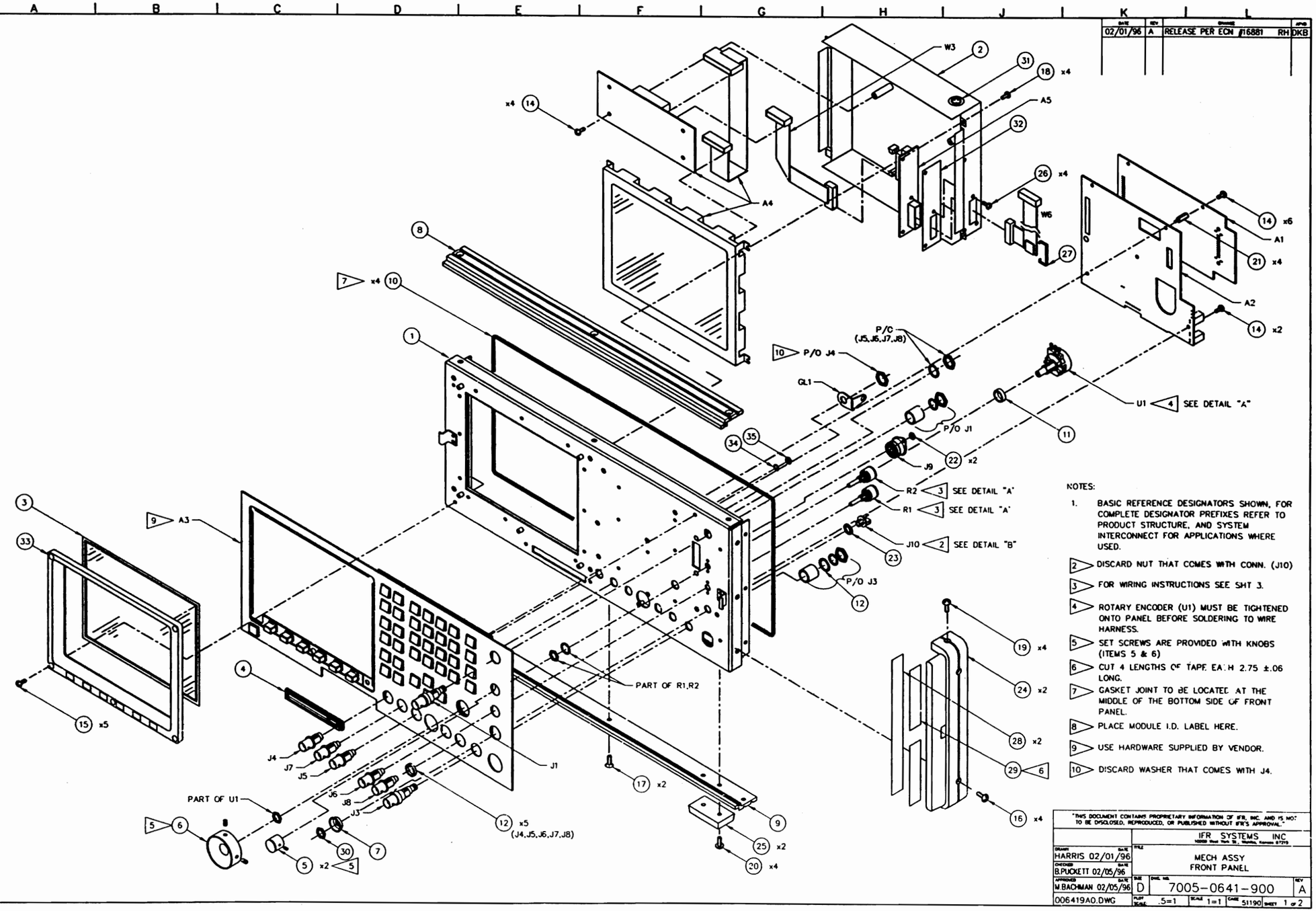

NOTES:

1. BASIC REFERENCE DESIGNATORS SHOWN, FOR COMPLETE DESIGNATOR PREFIXES REFER TO PRODUCT STRUCTURE, AND SYSTEM INTERCONNECT FOR APPLICATIONS WHERE USED.
2. DISCARD NUT THAT COMES WITH CONN. (J10)
3. FOR WIRING INSTRUCTIONS SEE SHT 3.
4. ROTARY ENCODER (U1) MUST BE TIGHTENED ONTO PANEL BEFORE SOLDERING TO WIRE HARNESS.
5. SET SCREWS ARE PROVIDED WITH KNOBS (ITEMS 5 & 6)
6. CUT 4 LENGTHS OF TAPE EACH 2.75 ±.06 LONG.
7. GASKET JOINT TO BE LOCATED AT THE MIDDLE OF THE BOTTOM SIDE OF FRONT PANEL.
8. PLACE MODULE I.D. LABEL HERE.
9. USE HARDWARE SUPPLIED BY VENDOR.
10. DISCARD WASHER THAT COMES WITH J4.

"THIS DOCUMENT CONTAINS PROPRIETARY INFORMATION OF IFR, INC. AND IS NOT TO BE DISCLOSED, REPRODUCED, OR PUBLISHED WITHOUT IFR'S APPROVAL."

IFR SYSTEMS INC

DRAWN HARRIS 02/01/96	TITLE	MECH ASSY FRONT PANEL	
CHECKED B.PUCKETT 02/05/96			
APPROVED M.BACHMAN 02/05/96	SIZE D	DWG. NO. 7005-0641-900	REV A
006419A0.DWG	PLOT SCALE .5=1	SCALE 1=1	CAGE 51190 SHEET 1 of 2

Scans by ArtekMedia © 2008

Scans by ArtekMedia © 2008

DATE	REV	CHANGE	APVD
		SEE SHEET ONE	

FRONT PANEL REAR

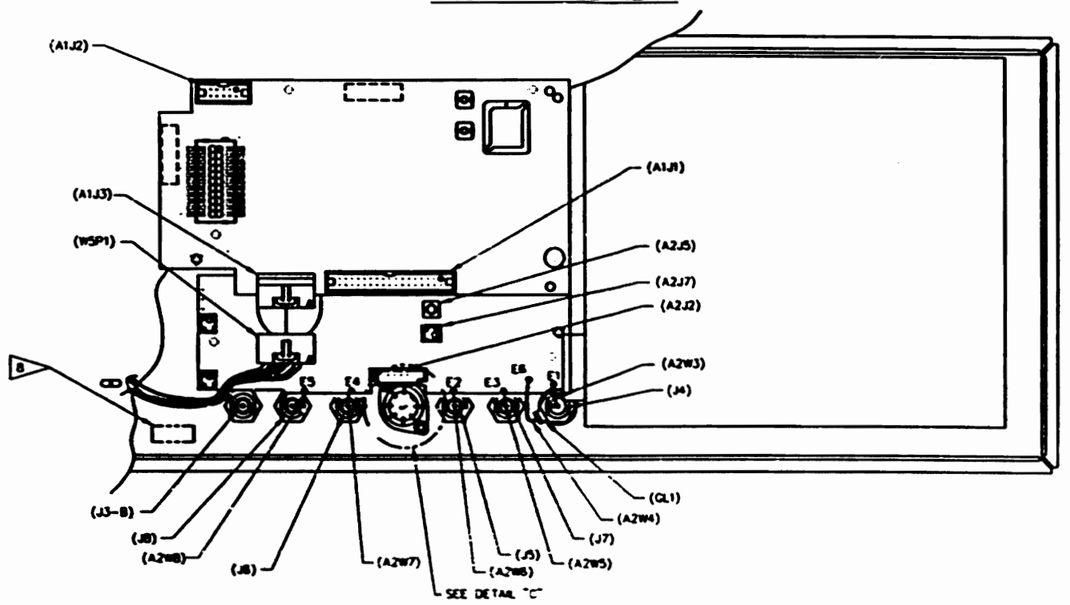

WIRE RUNNING LIST				
DESG	FROM	TO	COLOR	AWG
A2W1	A2E7	J10-1	BLUE	26
A2W2	A2E8	J10-2	WHT/BLUE	26
A2W3	A2E1	J4	BUSS	22
A2W4	A2E6	GL1	BUSS	22
A2W5	A2E5	J7	BUSS	22
A2W6	A2E2	J6	BUSS	22
A2W7	A2E4	J5	BUSS	22
A2W8	A2E3	J8	BUSS	22
A2W9	A2E9	J10-1	BLUE	26
W1	R1-2	R1-2	ORN	26
W2	R2-2	R1-3	BLACK	26
W4W1	W4P1-1	J9-1	BRN	26
W4W2	W4P1-2	J9-2	RED	26
W4W1	W4P1-3	J9-3	ORN	26
W4W4	W4P1-4	J9-4	WHT	26
W4W5	W4P1-5	J9-5	BRNBK	26
W4W6	W4P1-6	J9-6	GRAY	26
W4W7	W4P1-7	J9-7	VIO	26
W4W8	W4P1-8	J9-8	BLACK	26
W5W1	W5P1-1	R/C		
W5W2	W5P1-2	R2-1	WHT/VIO	26
W5W3	W5P1-3	R1-1	WHT/YEL	26
W5W4	W5P1-4	R1-2	ORN	26
W5W5	W5P1-5	R1-3	BLACK	26
W5W6	W5P1-6	U1-1	WHT/BRN	26
W5W7	W5P1-7	U1-2	WHT/GRN	26
W5W8	W5P1-8	U1-3	BLACK	26
C1	J10-1	GL2		
C2	J10-2	GL2		

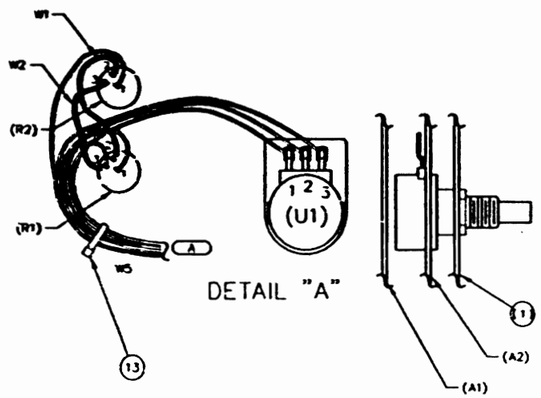

DETAIL "A"

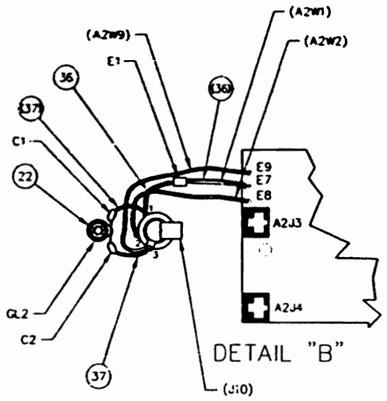

DETAIL "B"

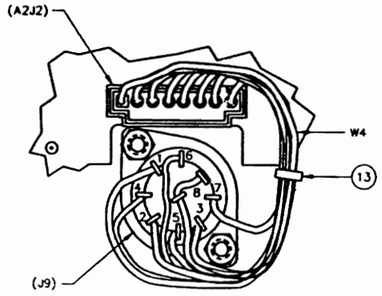

DETAIL "C"

"THIS DOCUMENT CONTAINS PROPRIETARY INFORMATION OF IFR, INC. AND IS NOT TO BE DISCLOSED, REPRODUCED, OR PUBLISHED WITHOUT IFR'S APPROVAL."

IFR SYSTEMS INC
10200 West York St., Wichita, Kansas 67215

DRAWN HARRIS 02/01/96	TITLE MECH ASSY FRONT PANEL
CHECKED B.PUCKETT 02/05/96	
APPROVED M.BACHMAN 02/05/96	SIZE D / DWG NO. 7005-0641-900 / REV A
006419A0.DWG	PLOT SCALE 1=1 / SCALE 1=1 / CAGE 51190 / SHEET 2 OF 2

DATE	REV	CHANGE	APPROVED
02/02/96	A	RELEASE PER ECN #16881	RH DKB

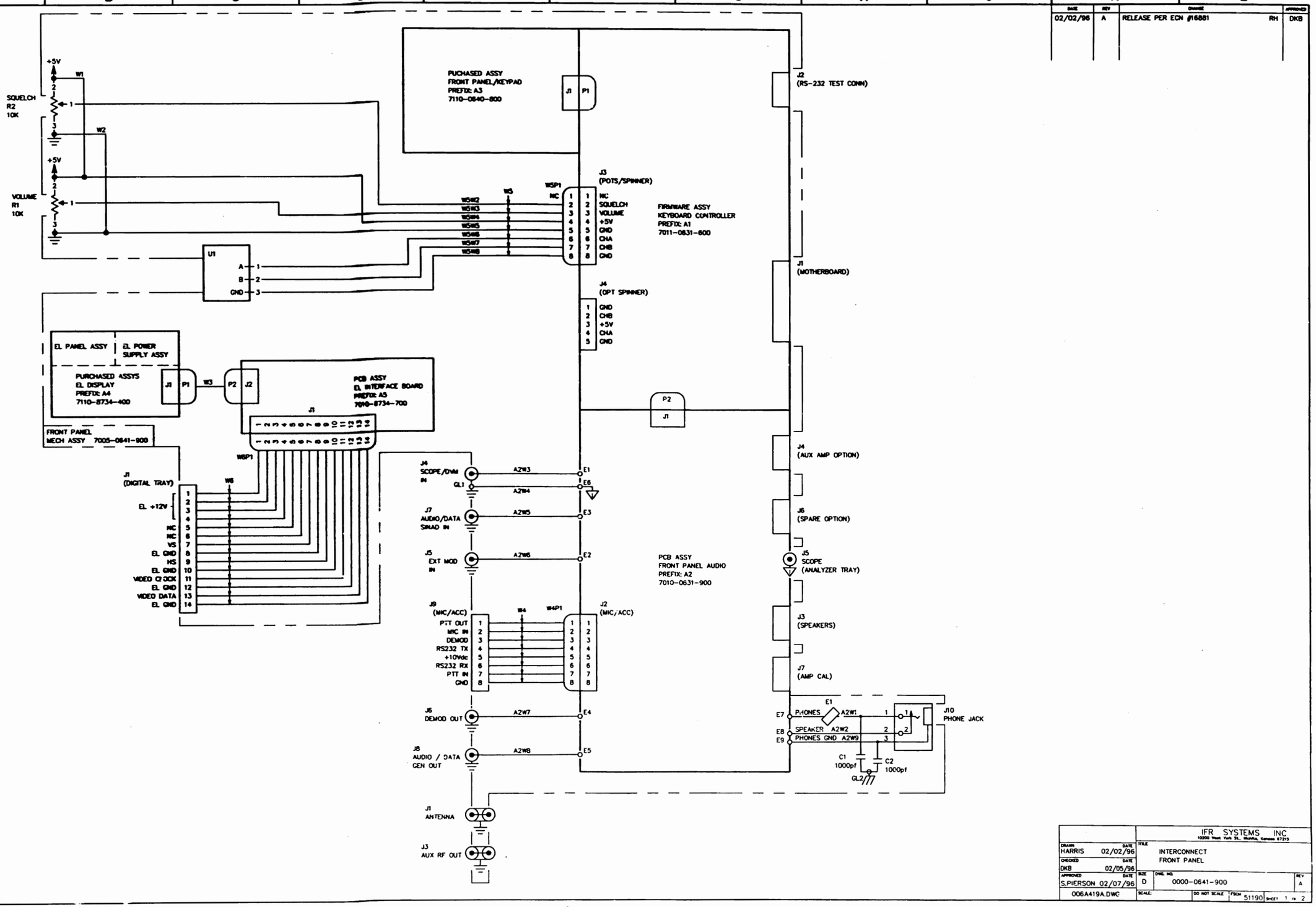

		IFR SYSTEMS INC
DRAWN HARRIS	DATE 02/02/96	TITLE INTERCONNECT FRONT PANEL
CHECKED DKB	DATE 02/05/96	
APPROVED S.PIERSON	DATE 02/07/96	SIZE D · DWG. NO. 0000-0641-900 · REV A
006A419A.DWC		SCALE · DO NOT SCALE · FSCM 51190 · SHEET 1 OF 2

Scans by ArtekMedia © 2008

Scans by ArtekMedia © 2008

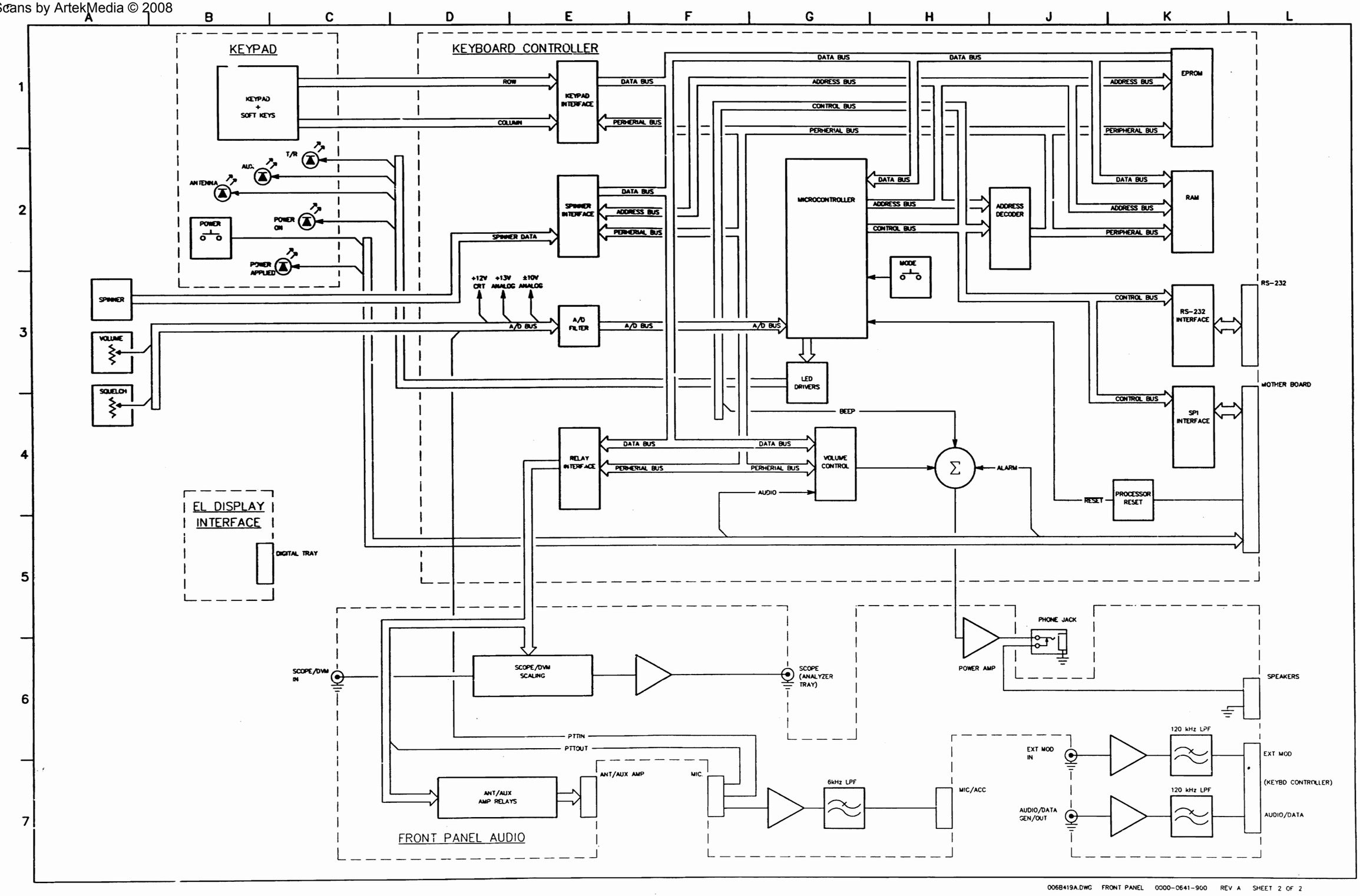

006B419A.DWG FRONT PANEL 0000-0641-900 REV A SHEET 2 OF 2

K		L	
DATE	QTY	CHANGE	APVD
8/4/95	A	RELEASE PER ECN 16590 MB	BM

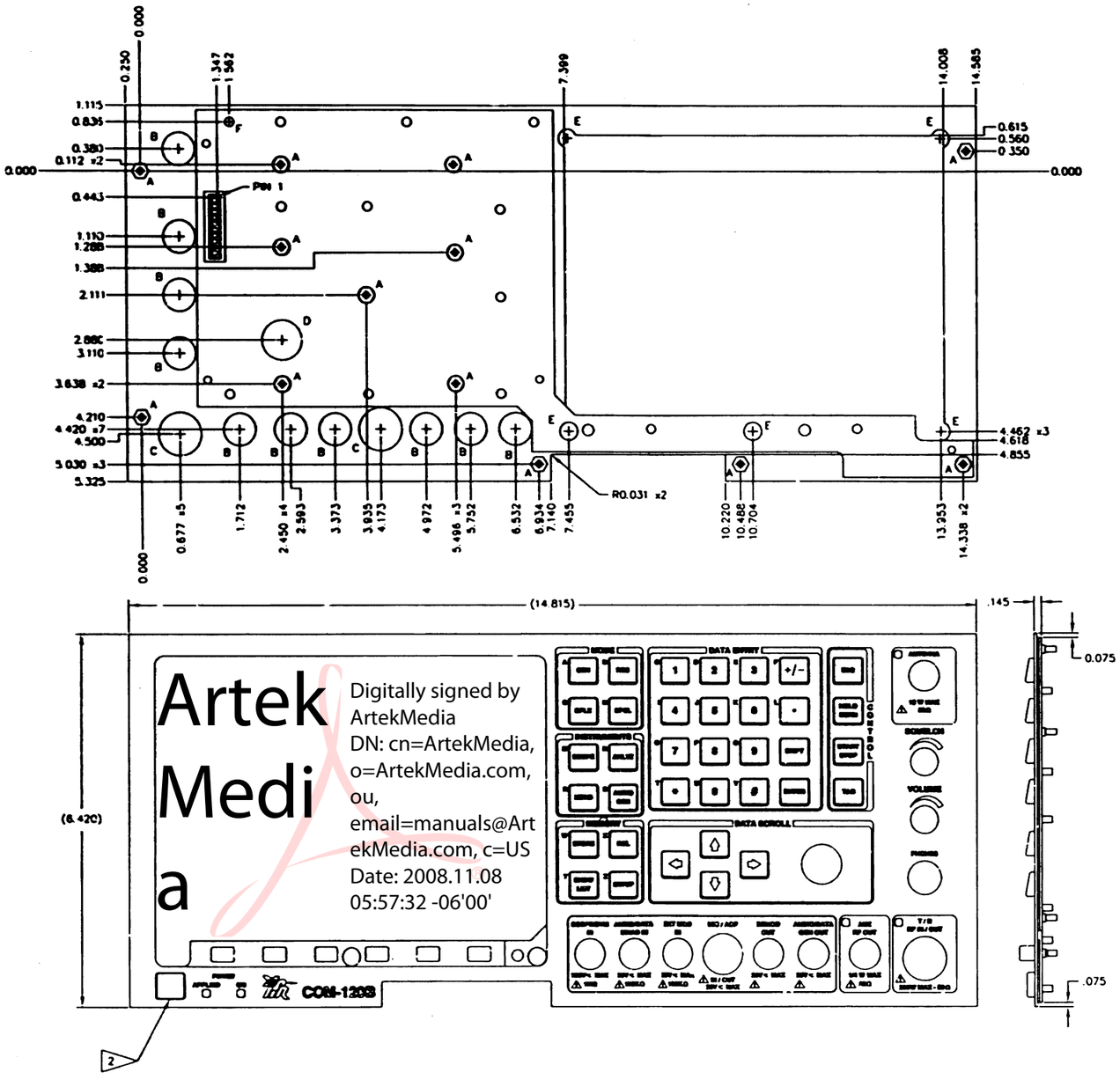

HOLE SCHEDULE		
SYM	DESCRIPTION	QTY
A	4-40 STUD .185 LG FROM MTG SURFACE & 4-40 LG PATTERN HEX NUT	13
B	ø0.562	10
C	ø0.750	2
D	ø0.687	1
E	ø0.312	5
F	4-40 GND STUD .450 LG FROM MTG SURFACE	1

NOTES:

1. FIRST ARTICLE APPROVAL IS REQUIRED BY IFR SYSTEMS ENG DEPT. ON ALL INITIAL ASSEMBLIES. ALL SUBSEQUENT CHANGES OR REPAIRS TO DIES, MOLDS OR APPEARANCE MUST ALSO BE APPROVED.

2. ACTUATION FORCE FOR POWER SWITCH IS 170 gms MIN. ALL OTHER SWITCHES ARE 125 gms ±25 gms

3. TOLERANCES: XXX ±.010

Artek Media
Digitally signed by ArtekMedia
DN: cn=ArtekMedia, o=ArtekMedia.com, ou, email=manuals@ArtekMedia.com, c=US
Date: 2008.11.08 05:57:32 -06'00'

"THIS DOCUMENT CONTAINS PROPRIETARY INFORMATION OF IFR, INC. AND IS NOT TO BE DISCLOSED, REPRODUCED, OR PUBLISHED WITHOUT IFR'S APPROVAL."

IFR SYSTEMS INC

DRAWN M. BRUFFETT 5/17/95	TITLE	ASSY, FRONT PANEL, COM-120B	
CHECKED S. PERKINS 5/18/95			
APPROVED M. BACHMAN 5/18/95	SIZE D	DWG. NO. 7110-0640-800	REV A
006408A0.DWG	PLOT SCALE 1=1	SCALE 1=1 CAGE 51190	SHEET 1 OF 1

Scans by ArtekMedia © 2008

Scans by ArtekMedia © 2008

DATE	REV	CHANGE		APVD
5-3-95	A	RELEASE	MKM	DKB
8-22-95	B	INC ECN 16657	RLA	BM

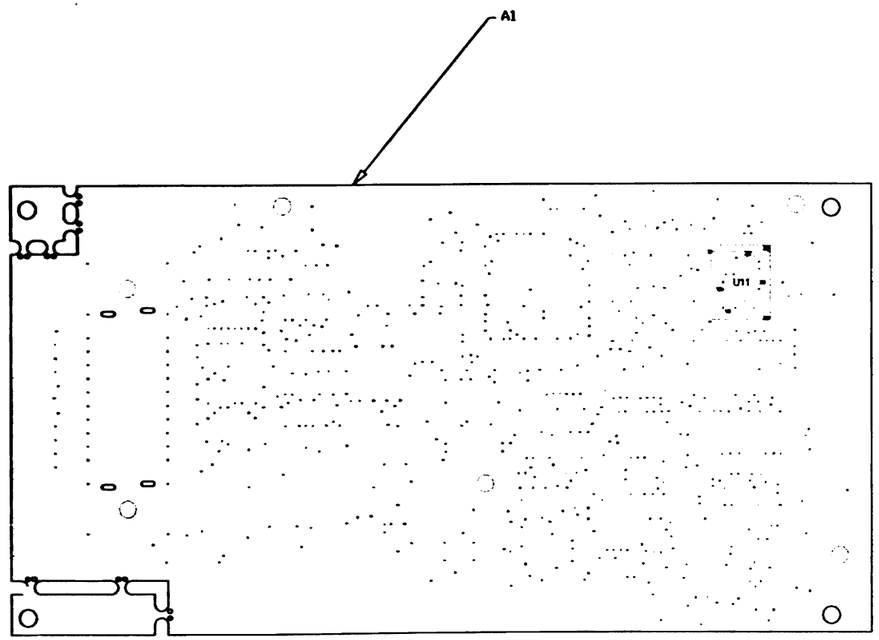

NOTES:

1. BASIC REFERENCE DESIGNATORS SHOWN, FOR COMPLETE DESIGNATOR PREFIXES REFER TO PRODUCT STRUCTURE, AND SYSTEM INTERCONNECT FOR APPLICATIONS WHERE USED.
2. HARDWARE THAT IS NOT PART OF BILL OF MATERIALS SHOULD NOT BE INSTALLED.

CAUTION
CONTAINS PARTS AND ASSEMBLIES SUSCEPTIBLE TO DAMAGE BY ELECTROSTATIC DISCHARGE (ESD).

DRAWN M.K.MOFFITT 3-13-95	IFR SYSTEMS INC 10000 West Yore St., Wichita, Kansas 67215
CHECKED D.K.B. 5-1-95	TITLE ASSEMBLY DRAWING KEYBOARD CONTROLLER
APPROVED M.J.P. 5-2-95	SIZE D · DWG NO. 7011-0631-600 · REV B
110616B0.PLT	SCALE · DO NOT SCALE · PROM 51190 · SHEET 1 OF 1

DATE	REV	CHANGE		APVD
5-3-95	A	RELEASE	MKM	DKB
11-10-95	B	INC ECN 16768	MKM	BM

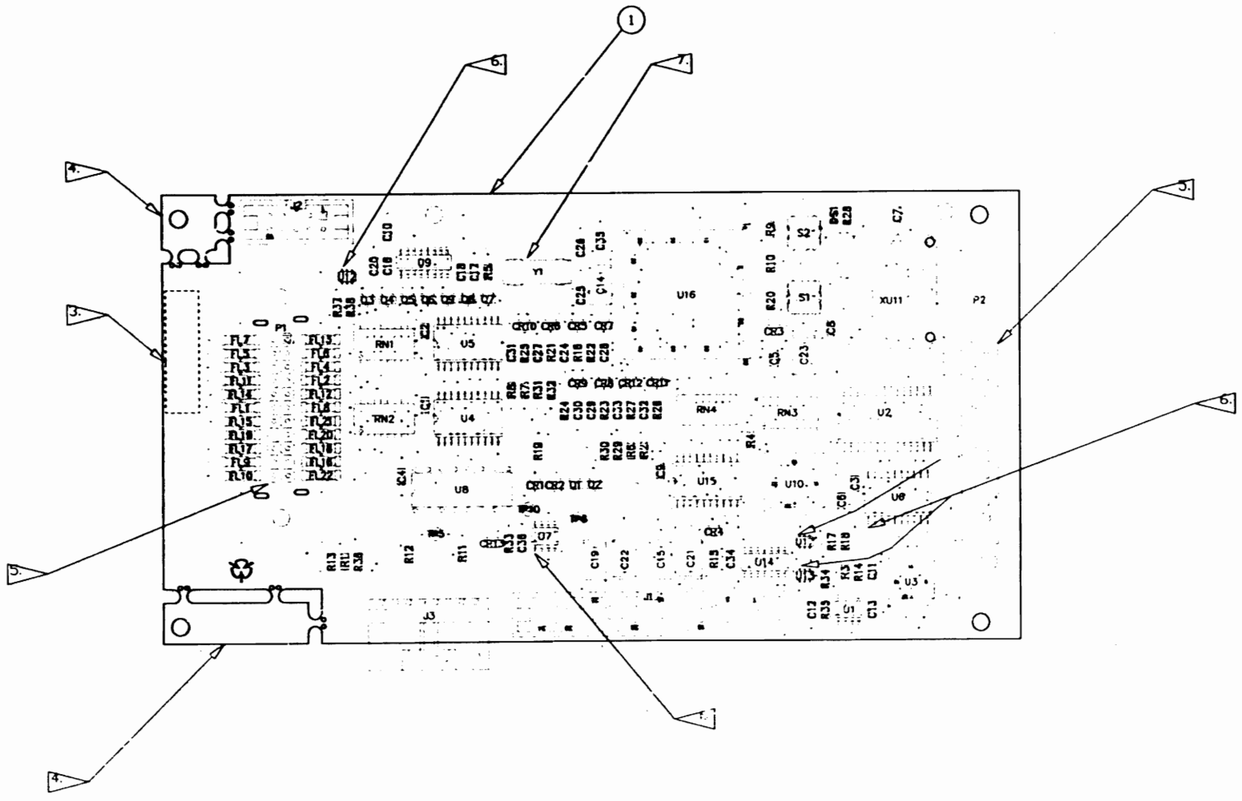

TOP VIEW

NOTES:

1. BASIC REFERENCE DESIGNATORS SHOWN, FOR COMPLETE DESIGNATOR PREFIXES REFER TO PRODUCT STRUCTURE, AND SYSTEM INTERCONNECT FOR APPLICATIONS WHERE USED.
2. HARDWARE THAT IS NOT PART OF BILL OF MATERIALS SHOULD NOT BE INSTALLED.

3. AFFIX MODULE IDENT LABEL HERE.
4. TO BE REMOVED PRIOR TO MECH. ASSY.
5. TO BE INSTALLED ON BOTTOM SIDE ONLY.
6. PIN 1 LOCATION.
7. HAND PLACE Y1.

CAUTION:
CONTAINS PARTS AND ASSEMBLIES SUSCEPTIBLE TO DAMAGE BY ELECTROSTATIC DISCHARGE (ESD).

	IFR SYSTEMS, INC. 10200 West York St., Wichita, Kansas 67215
DRAWN M.K.MOFFITT 3-13-95	TITLE ASSEMBLY DRAWING KEYBOARD CONTROLLER
CHECKED D.K.B. 5-1-95	
APPROVED M.J.P. 5-2-95	SIZE D / DWG. NO. 7010-0631-600 / REV B
100616BO.PLT	SCALE N.T.S. / DO NOT SCALE / FSCM 51190 / SHEET 1 OF 1

Scans by ArtekMedia © 2008

Scans by ArtekMedia © 2008

DATE	REV	CHANGE	APVD
9-29-95	A	RELEASE PER ECN 18654 MKM	DKB

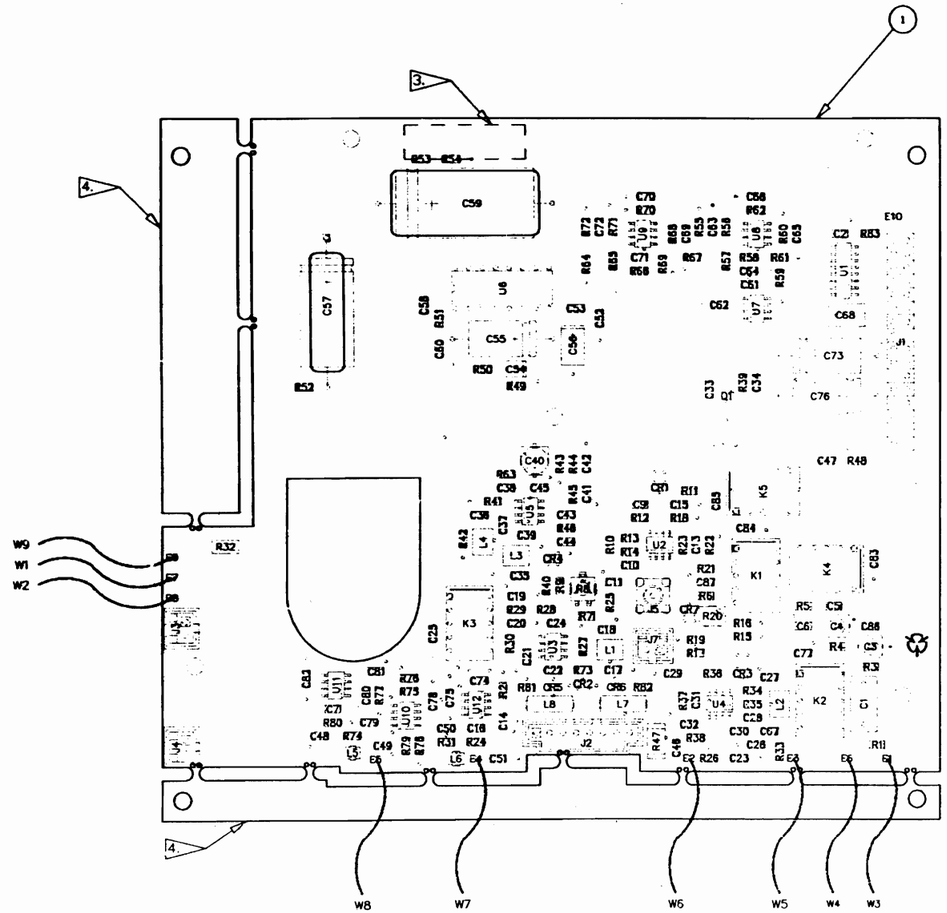

NOTES:

1. BASIC REFERENCE DESIGNATORS SHOWN, FOR COMPLETE DESIGNATOR PREFIXES REFER TO PRODUCT STRUCTURE, AND SYSTEM INTERCONNECT FOR APPLICATIONS WHERE USED.
2. HARDWARE THAT IS NOT PART OF BILL OF MATERIALS SHOULD NOT BE INSTALLED.

3. AFFIX MODULE IDENT LABEL HERE.

4. TO BE REMOVED PRIOR TO MECH. ASSY.

CAUTION:
CONTAINS PARTS AND ASSEMBLIES SUSCEPTIBLE TO DAMAGE BY ELECTROSTATIC DISCHARGE (ESD).

TOP VIEW

DRAWN M.MOFFITT 6-27-95	IFR SYSTEMS INC 10000 West York St, Wichita, Kansas 67215	
CHECKED D.K.B. 9-29-95	TITLE ASSEMBLY DRAWING AUDIO BOARD	
APPROVED S.PIERSON 9-29-95	SIZE D	DWG. NO. 7010-0631-900 REV A
100619A0.PLT	SCALE N.T.S. DO NOT SCALE	FSCM 51190 SHEET 1 of 1

DATE	REV	COMMENTS	APVD
8-14-92	A	DESIGN RELEASE	LWB
4-29-93	A1	PROD REL PER ECN 1554-4	MKM DKB

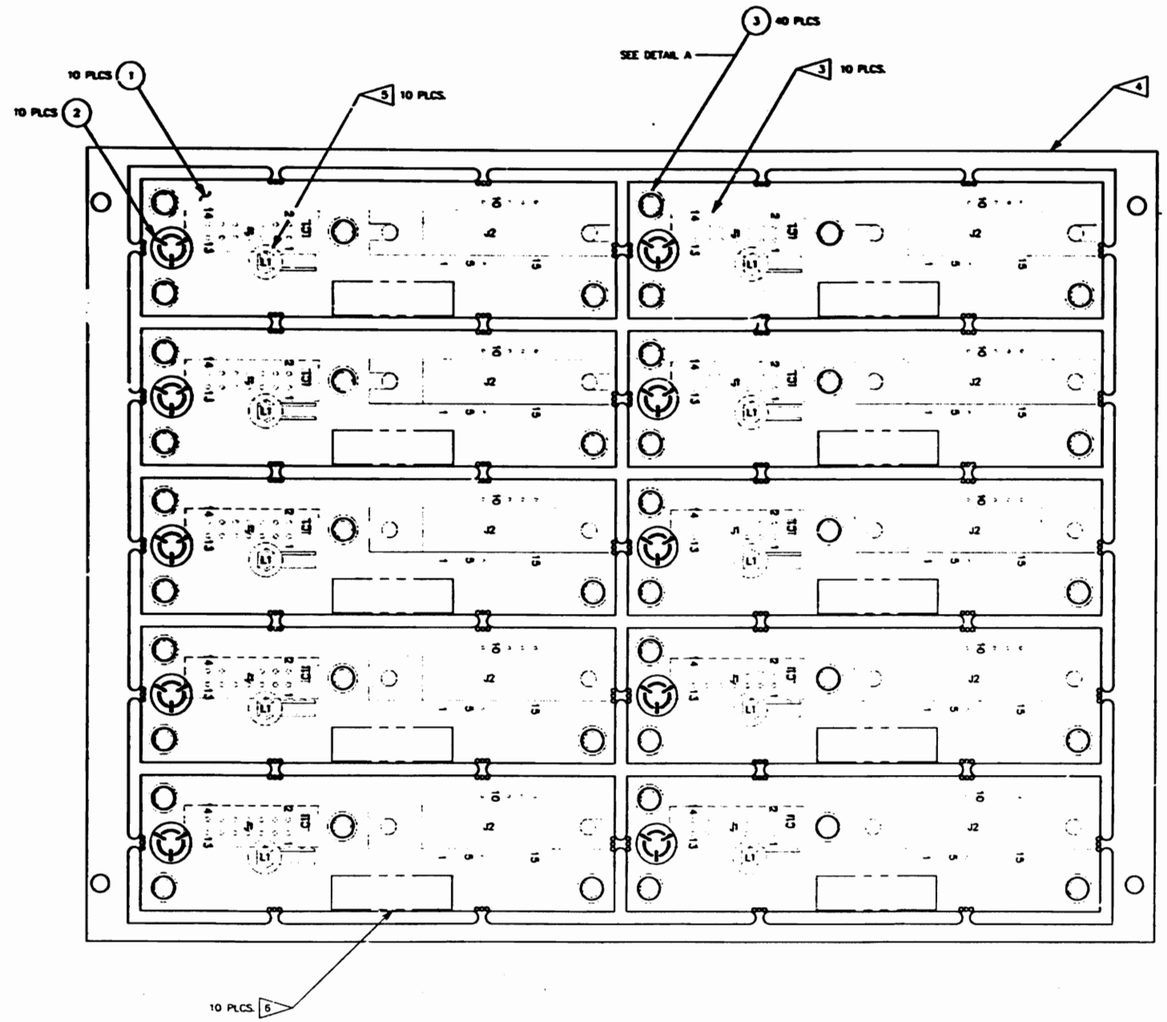

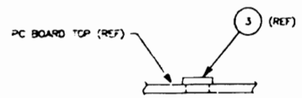

DETAIL A

NOTES:

1. BASIC REFERENCE DESIGNATORS SHOWN, FOR COMPLETE DESIGNATOR PREFIXES REFER TO PRODUCT STRUCTURE, AND SYSTEM INTERCONNECT FOR APPLICATIONS WHERE USED.
2. REF SCHEMATIC # 0000-8734-700.

3 TO BE INSTALLED ON BOTTOM SIDE ONLY.

4 TO BE REMOVED PRIOR TO MECH. ASSY.

5 SECURE TO PC BD WITH PERMABOND (1050-0002-275)

6 AFFIX MODULE IDENT LABEL HERE.

CAUTION:
CONTAINS PARTS AND ASSEMBLIES SUSCEPTIBLE TO DAMAGE BY ELECTROSTATIC DISCHARGE (ESD).

DRAWN DATE: R. AST 4-30-92	IFR SYSTEMS INC. 10000 West York St., Wichita, Kansas 67215
CHECKED DATE: D.K.B. 8-14-92	TITLE: ASSEMBLY DWG EL DISPLAY INTERFACE
APPROVED DATE: S.PIERSON 8-14-92	SIZE: C; DWG. NO.: 7010-8734-700; REV: A1
	SCALE: N.T.S.; DO NOT SCALE; FSCM: 51190; SHEET 1 OF 1

Scans by ArtekMedia © 2008

Scans by ArtekMedia © 2008

DATE	REV	CHANGE	APVD
8-17-92	B	DESIGN RELEASE	DKB
4-28-93	B1	PROD REL PER ECN 15564 MKM	DKB

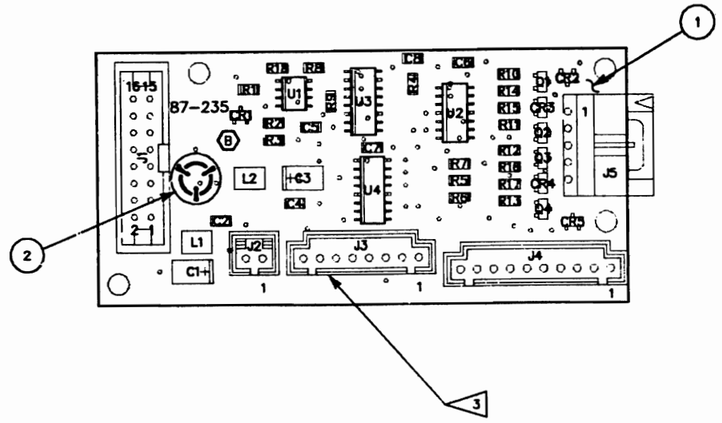

NOTES:

1. BASIC REFERENCE DESIGNATORS SHOWN, FOR COMPLETE DESIGNATOR PREFIXES REFER TO PRODUCT STRUCTURE, AND SYSTEM INTERCONNECT FOR APPLICATIONS WHERE USED.
2. REF SCHEMATIC # 0000-8733-500.
3. AFFIX MODULE IDENT LABEL HERE BOTTOM SIDE.

CAUTION:
CONTAINS PARTS AND ASSEMBLIES SUSCEPTIBLE TO DAMAGE BY ELECTROSTATIC DISCHARGE (ESD).

	IFR SYSTEMS INC 10200 West York St., Wichita, Kansas 67215
DRAWN DATE: R. AST 7-25-1992	TITLE: ASSEMBLY DWG ATTENUATOR CONTROL
CHECKED DATE: D.K.B. 8-14-92	SIZE: C DWG. NO.: 7010-8733-500 REV: B1
APPROVED DATE: M.BACHMAN 8-24-92	SCALE: N.T.S. DO NOT SCALE FSCM 51190 SHEET 1 OF 1

DATE	REV	CHANGE	BY
6-17-92	B	DESIGN RELEASE	DKB
DATE	REV	CHANGE	BY
4-21-93	B1	PROD. REL. PER ECN #15564 J.I.M.	DKB

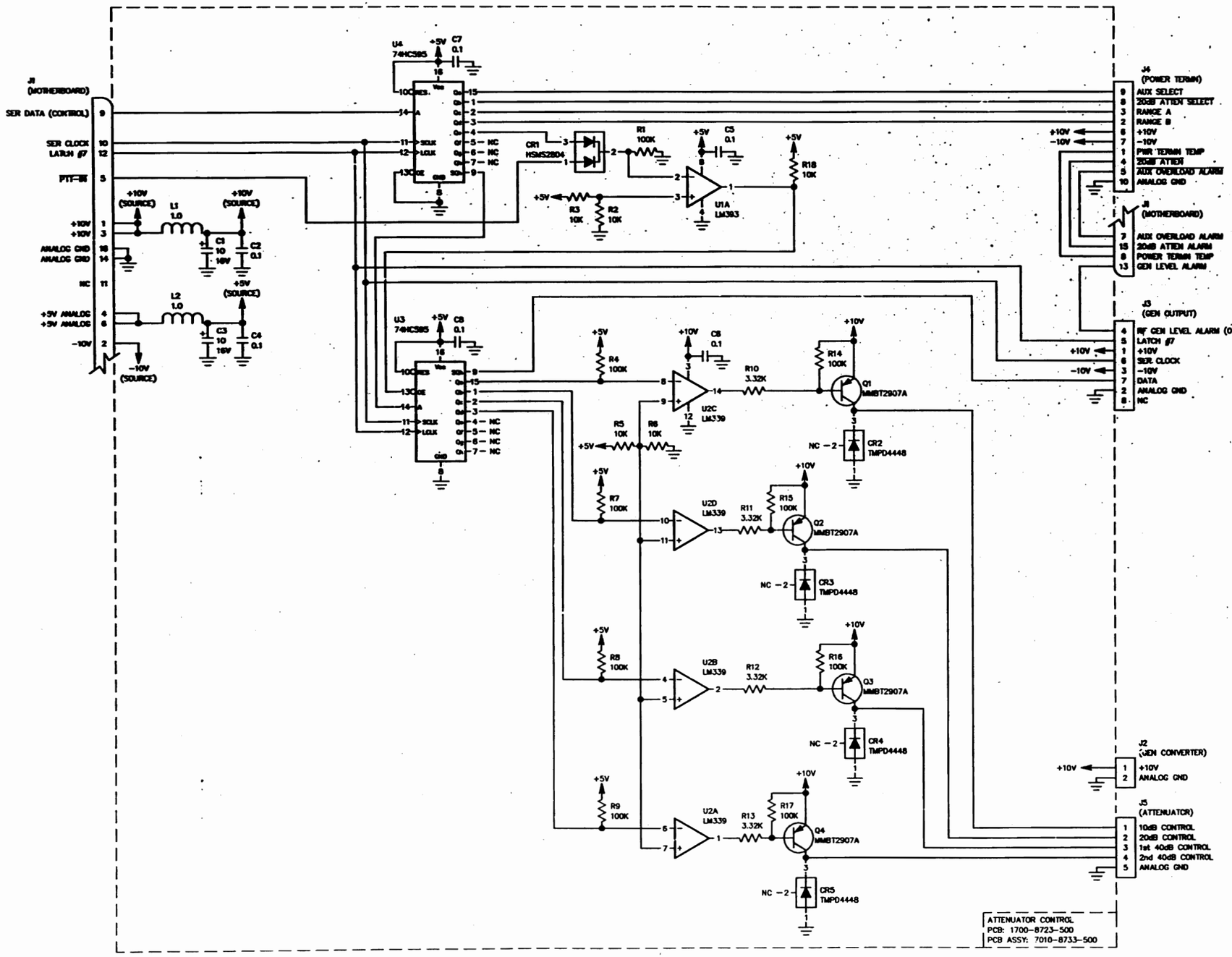

NOTES:
(UNLESS OTHERWISE SPECIFIED)

1. BASIC REFERENCE DESIGNATORS SHOWN, FOR COMPLETE DESIGNATOR PREFIXES REFER TO PRODUCT STRUCTURE, AND SYSTEM INTERCONNECT FOR APPLICATIONS WHERE USED.
2. ALL RESISTORS ARE 1%, 1/8W.
3. ALL RESISTANCE IS EXPRESSED IN OHMS.
   ALL CAPACITANCE IS EXPRESSED IN MICROFARADS.
   ALL INDUCTANCE IS EXPRESSED IN MICROHENRIES.
4. HIGHEST REFERENCE DESIGNATIONS.
   C8, CR5, L2, Q4, R18, U4, J5
5. REFERENCE DESIGNATIONS NOT USED. NONE
6. FOR INTERCONNECT/BLOCK DIAGRAM SEE APPLICATIONS WHERE USED.
7. IC FUNCTIONS NOT USED:

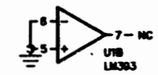

* - INDICATES PRINTED TRANSMISSION LINES OF OTHER THAN 50 OHMS IMPEDANCE WHICH CONSTITUTE CIRCUIT ELEMENTS. 50 OHM TRANSMISSION LINES ARE NOT SHOWN.

CAUTION:
CONTAINS PARTS AND ASSEMBLIES SUSCEPTIBLE TO DAMAGE BY ELECTROSTATIC DISCHARGE (ESD).

DRAWN T.Q.TRAN	DATE 12/6/91	IFR SYSTEMS INC 10200 West York St., Wichita, Kansas 67215
CHECKED D. BROKSCHMIDT	DATE 8/17/92	TITLE SCHEMATIC ATTENUATOR CONTROL
APPROVED S. PIERSON	DATE 8/17/92	SIZE D; DWG. NO. 0000-8733-500; REV B1
SCALE	DO NOT SCALE	FSCM 51190 SHEET 1 of 2

Scans by ArtekMedia © 2008

Scans by ArtekMedia © 2008

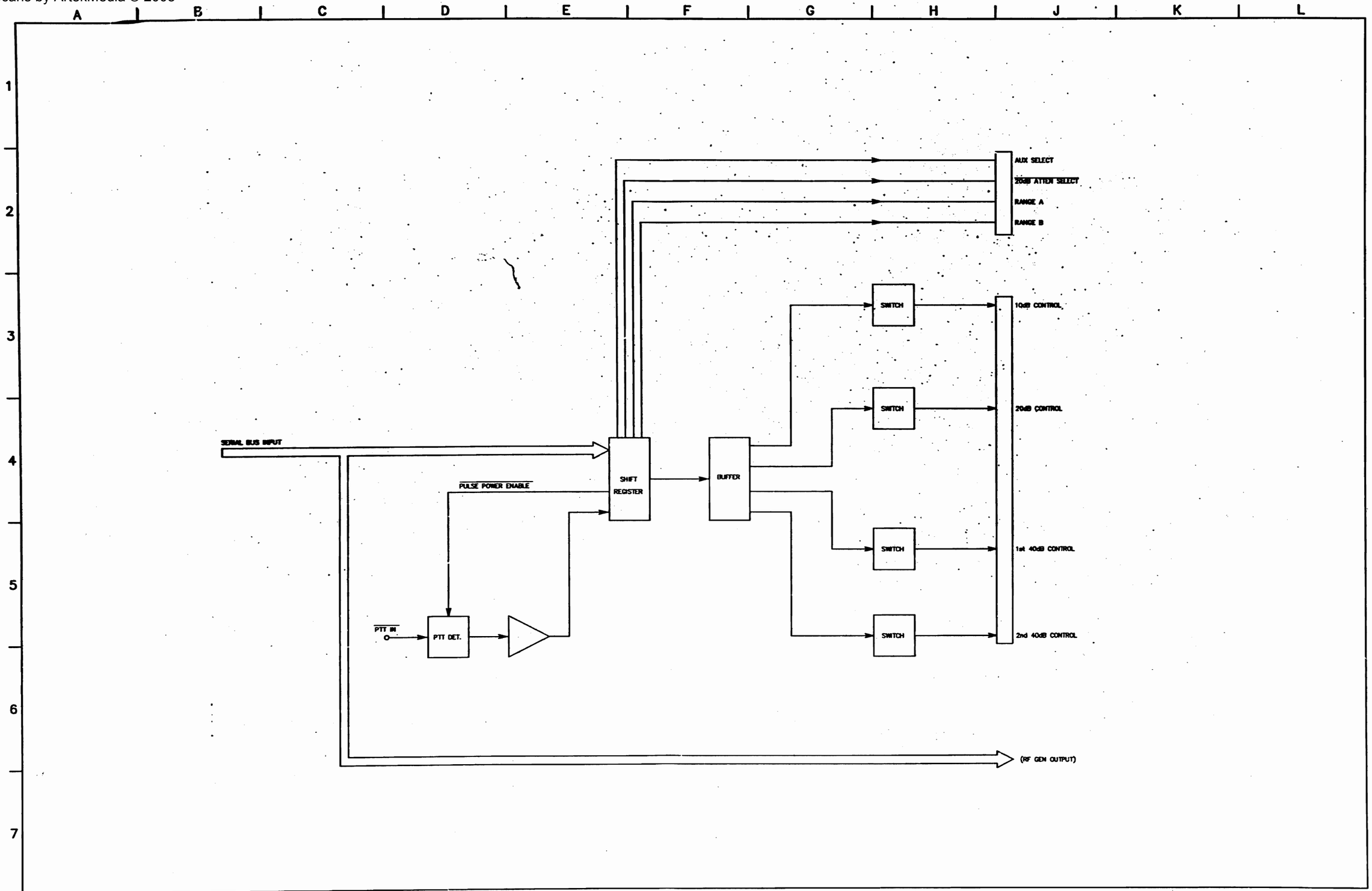

DATE	REV			APVD
9/23/92	E1	DESIGN RELEASE	RH	DKB
1/4/93	E2	INC FMY-095	RH	DKB
04/13/93	E3	PROD REL ECN 15564	SP	DKB
08/23/93	E4	INC ECN 15769	BP	BM
1/6/95	F	INC ECN 16392	RH	BM

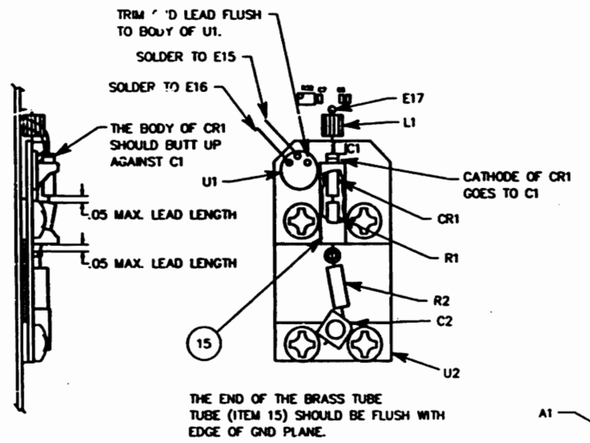

THE END OF THE BRASS TUBE TUBE (ITEM 15) SHOULD BE FLUSH WITH EDGE OF GND PLANE.

DETAIL "A"

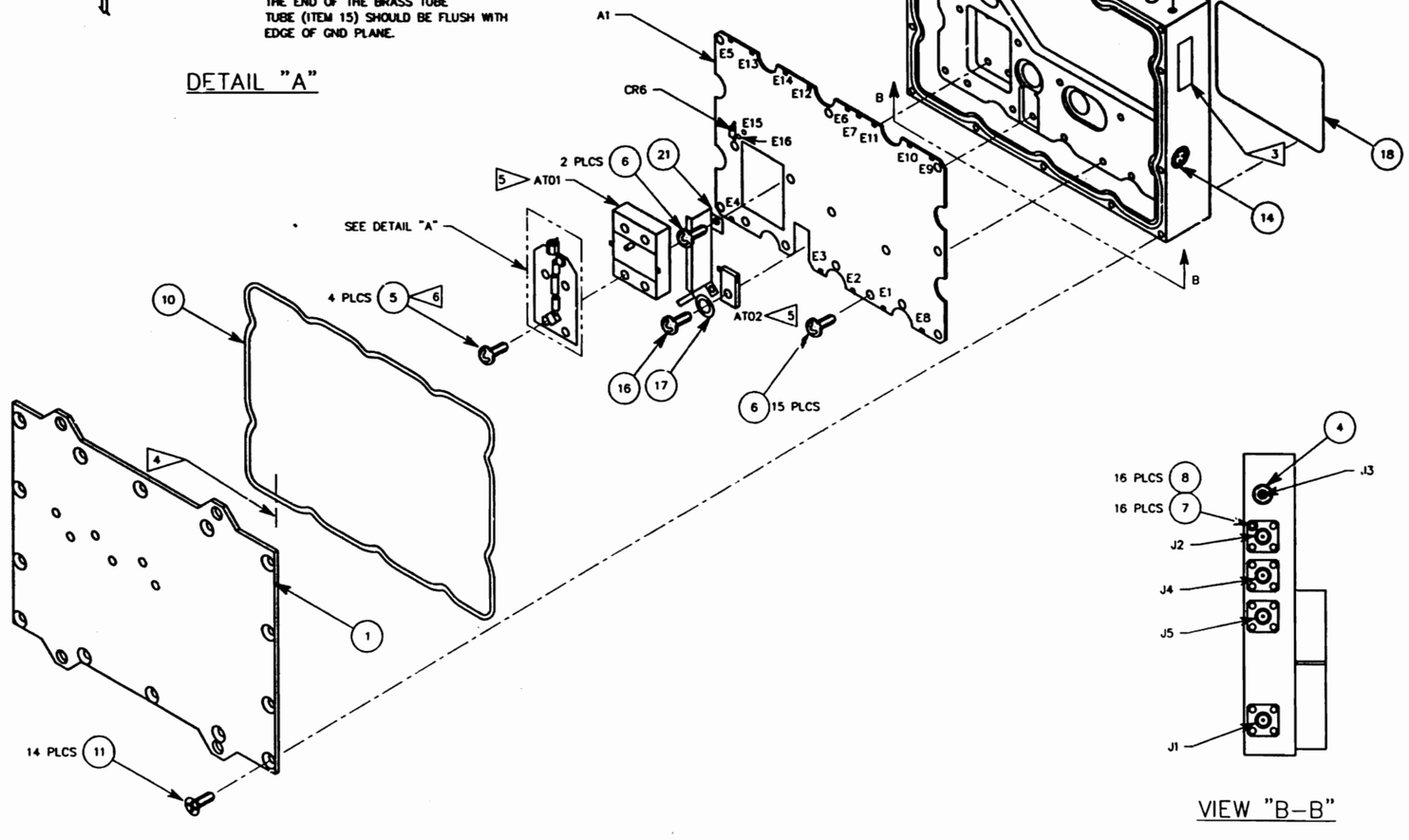

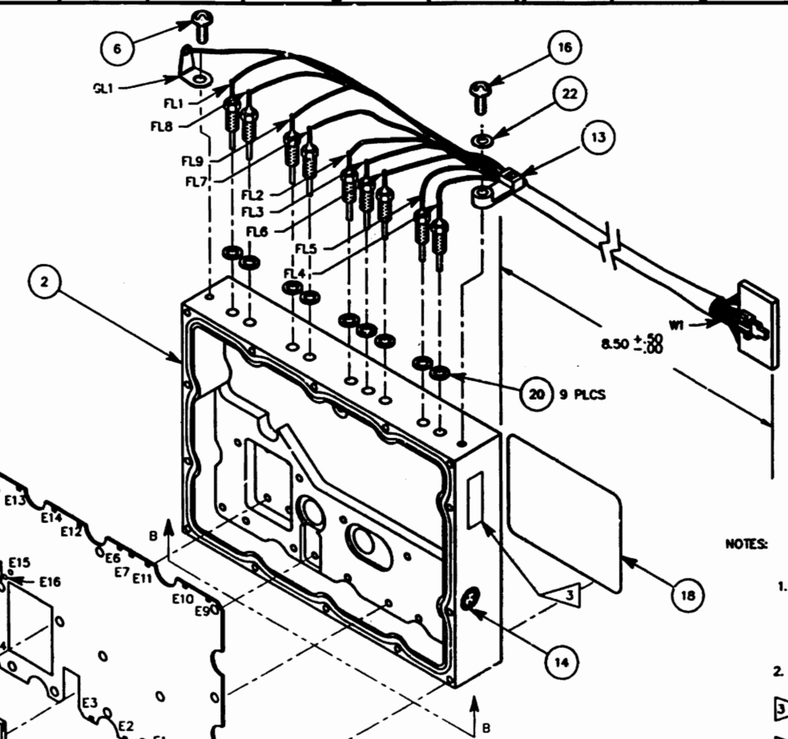

VIEW "B-B"

NOTES:

1. BASIC REFERENCE DESIGNATORS SHOWN, FOR COMPLETE DESIGNATOR PREFIXES REFER TO PRODUCT STRUCTURE, AND SYSTEM INTERCONNECT FOR APPLICATIONS WHERE USED.
2. MECH. ASS'Y DRAWING SHOWS ONLY PORTIONS OF PC BD ASSY'S REQUIRED FOR REF. ONLY.

3 > AFFIX MODULE IDENTIFICATION LABEL HERE.

4 > CUT ENDS OF GASKET MUST MEET UNDER COMPRESSION WHEN INSTALLED.

5 > APPLY THERMAL COMPOUND TO AT1 AND AT2

6 > TORQUE TO 10 IN.-LBS.

WIRE RUNNING LIST

DESG	FROM	TO	COLOR	AWG
W1W1	P1-01	FL1	BLUE	26
W1W2	P1-02	FL2	BRN/WHT	26
W1W3	P1-03	FL3	BLK/WHT	26
W1W4	P1-04	FL4	GRAY	26
W1W5	P1-05	FL5	VIOLET	26
W1W6	P1-06	FL6	RED	26
W1W7	P1-07	FL7	YELLOW	26
W1W8	P1-08	FL8	BRN	26
W1W9	P1-09	FL9	GRN	26
W1W10	P1-10	GL1	BLK	26

CAUTION:
CONTAINS PARTS AND ASSEMBLIES SUSCEPTIBLE TO DAMAGE BY ELECTROSTATIC DISCHARGE (ESD).

"THIS DOCUMENT CONTAINS PROPRIETARY INFORMATION OF IFR, INC. AND IS NOT TO BE DISCLOSED, REPRODUCED, OR PUBLISHED WITHOUT IFR'S APPROVAL."

IFR SYSTEMS INC
1325 Walt Whitman Rd., Melville, Nassau 07046

DRAWN HARRIS 5/26/92	TITLE	MECH ASSY, POWER TERMN
CHECKED S.PERKINS 8/16/92		
APPROVED S.STARKEL 9/23/92	SIZE D	DWG NO. 7005-8742-100 REV F
087421F0.DWG	PLOT SCALE 1=1	SCALE 1=1 CAGE 51190 SHEET 1 OF 1

Scans by ArtekMedia © 2008

Scans by ArtekMedia © 2008

DATE	REV	CHANGE		APVD
9-22-92	E-1	DESIGN RELEASE	RLA	DKB
4-26-93	E2	PROD REL PER ECN 15564	MKM	DKB
8-9-93	E3	INC ECN 15738	MKM	BM

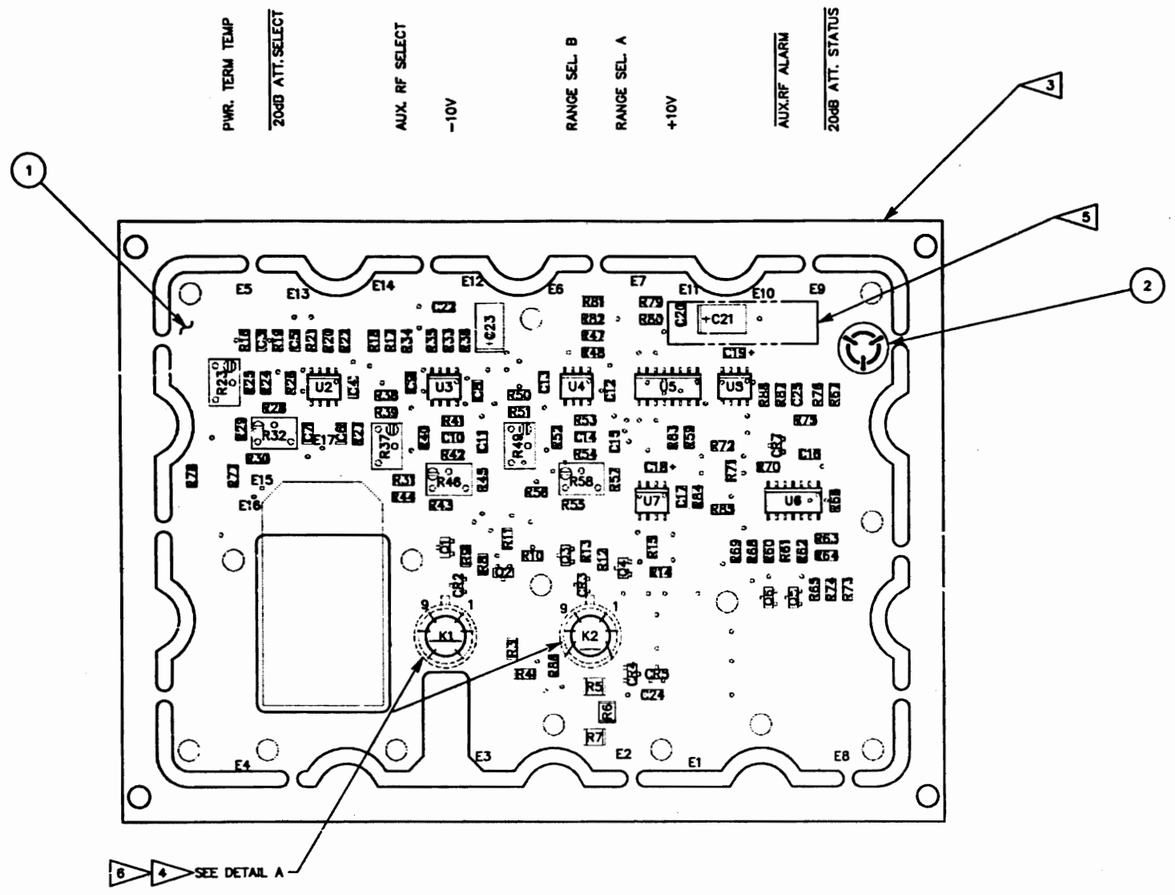

NOTES:

1. BASIC REFERENCE DESIGNATORS SHOWN, FOR COMPLETE DESIGNATOR PREFIXES REFER TO PRODUCT STRUCTURE, AND SYSTEM INTERCONNECT FOR APPLICATIONS WHERE USED.
2. REF SCHEMATIC # 0000-8742-100.
3. TO BE REMOVED PRIOR TO MECH. ASSY.
4. TO BE INSTALLED ON BOTTOM SIDE ONLY.
5. AFFIX MODULE IDENT LABEL HERE BOTTOM SIDE.
6. SOLDER K1 AND K2 RELAY CANS TO BOTTOM SIDE OF BOARD.
7. SOLDER K1 PINS 3 & 7 TO EACH OTHER AT CENTER OF RELAY.
8. SOLDER K2 PINS 4 & 6 TO EACH OTHER AT CENTER OF RELAY.
9. NON-TERMINATED E POINTS SHOWN FOR REFERENCE ONLY.

CAUTION:
CONTAINS PARTS AND ASSEMBLIES SUSCEPTIBLE TO DAMAGE BY ELECTROSTATIC DISCHARGE (ESD).

DRAWN DATE	R. AST 4-1-1991
CHECKED DATE	M.BACHMAN 9-22-92
APPROVED DATE	S.PIERSON 9-22-92

IFR SYSTEMS INC
10200 West York St., Wichita, Kansas 67215

TITLE: ASSEMBLY DWG POWER TERM

SIZE	DWG. NO.	REV
C	7010-8732-100	E3

SCALE: 1:1 | DO NOT SCALE | FSCM 51190 | SHEET 1 OF 1

DATE	REV	CHANGE		APPROVED
9-23-92	E	DESIGN RELEASE	J.L.M.	DKB
DATE	REV	CHANGE		APPROVED
4-22-93	E1	PROD. REL. PER ECN #15564	J.L.M.	DKB
8-10-93	E2	INC. ECN #15738	J.L.M.	BM

NOTES:
(UNLESS OTHERWISE SPECIFIED)

1. BASIC REFERENCE DESIGNATORS SHOWN, FOR COMPLETE DESIGNATOR PREFIXES REFER TO PRODUCT STRUCTURE, AND SYSTEM INTERCONNECT FOR APPLICATIONS WHERE USED.
2. ALL RESISTORS ARE 1%, 1/8W.
3. ALL RESISTANCE IS EXPRESSED IN OHMS.
   ALL CAPACITANCE IS EXPRESSED IN MICROFARADS.
   ALL INDUCTANCE IS EXPRESSED IN MICROHENRIES.
4. HIGHEST REFERENCE DESIGNATIONS.
   7005-8742-100 FL9, J5, P4, AT2, C2, CR6, GL1, L1, P1, R2, U1,
   7010-8732-100 C25, CR7, E14, K2, L1, Q8, R88, U8,
5. REFERENCE DESIGNATIONS NOT USED.
   7005-8742-100 CR2-CR5,
   7010-8732-100 R1, R2, C1, C2, CR1, U1,
6. FOR INTERCONNECT/BLOCK DIAGRAM SEE APPLICATIONS WHERE USED.
7. R2 IS A S.A.T.
   NOMINAL VALUE IS 75
   SELECT VALUES 68, 82,
8. CR1 AND CR6 ARE PAIRED
   HAVE TO BE REPLACED AS A PAIRED SET
9. INSTALLED AT MECH LEVEL.
10. IC FUNCTIONS NOT USED: NONE

* - INDICATES PRINTED TRANSMISSION LINES OF OTHER THAN 50 OHMS IMPEDANCE WHICH CONSTITUTE CIRCUIT ELEMENTS. 50 OHM TRANSMISSION LINES ARE NOT SHOWN.

CAUTION:
CONTAINS PARTS AND ASSEMBLIES SUSCEPTIBLE TO DAMAGE BY ELECTROSTATIC DISCHARGE (ESD).

DRAWN J. MILLER DATE 7-15-92	IFR SYSTEMS INC 10800 West York St., Wichita, Kansas 67215
CHECKED DEB B. 9-22-92	TITLE CIRCUIT SCHEMATIC POWER TERMN
APPROVED S. PIERSON 9-22-92	SIZE G DWG NO. 0000-8742-100 REV E2
	SCALE DO NOT SCALE FROM 51190 SHEET 1 OF 3

Scans by ArtekMedia © 2008

Scans by ArtekMedia © 2008

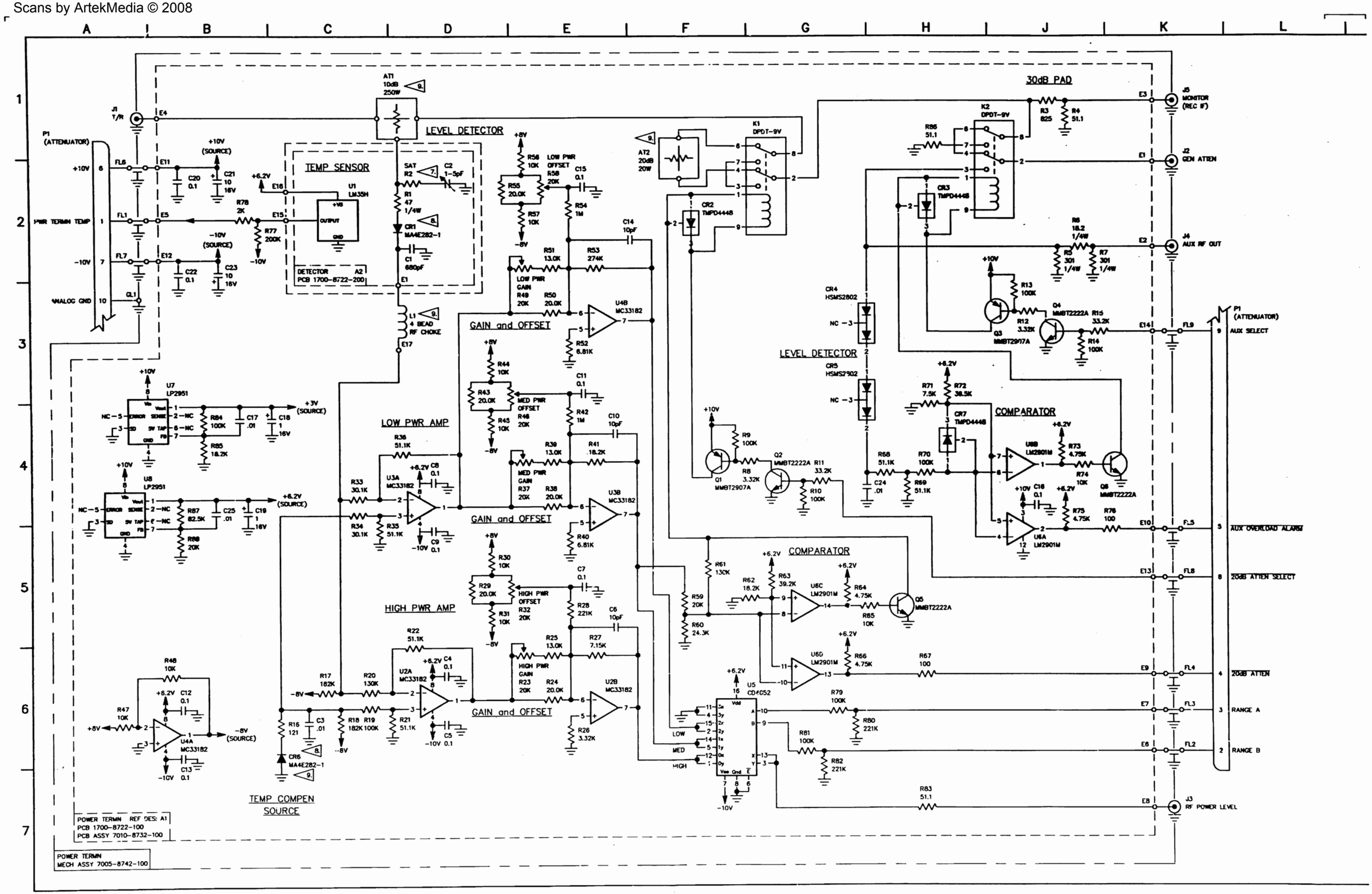

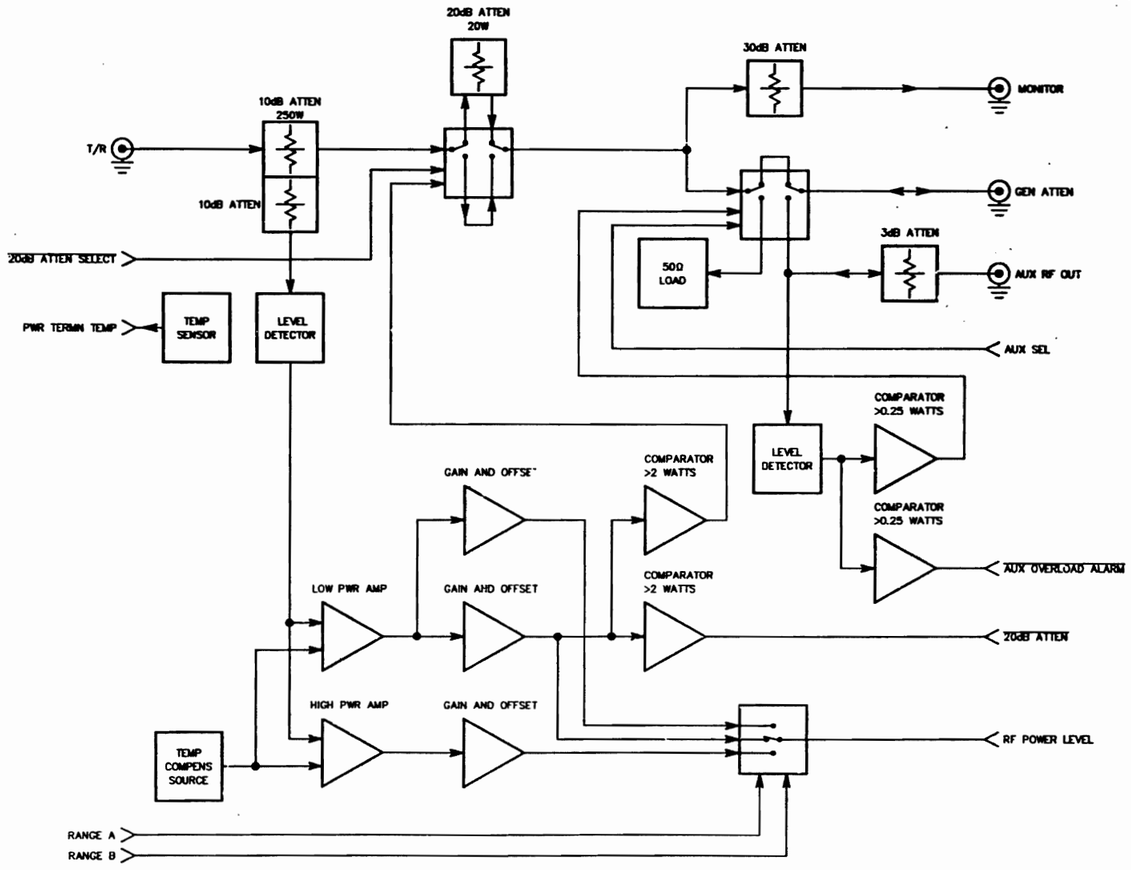

Scans by ArtekMedia © 2008

Scans by ArtekMedia © 2008

DATE	REV	CHANGE		APVD
8/14/92	D	DESIGN RELEASE	RH	DKB
10/30/92	D1	INC FMY-053	RH	DKB
1/4/93	D2	INC FMY-095	RH	DKB
04/13/93	D3	PROD. REL. PER ECN 15564	BP	DKB
08/23/93	D4	INC ECN 15769	BP	BM

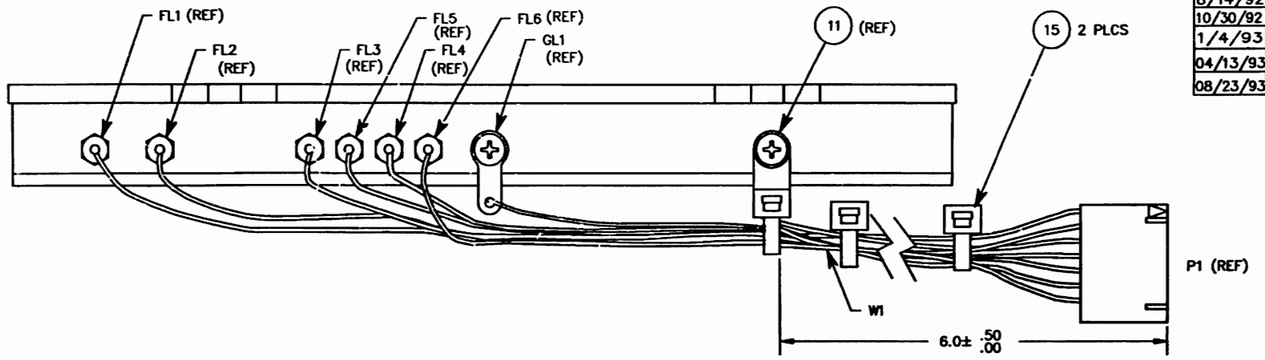

VIEW "A-A"

SCALE: NONE

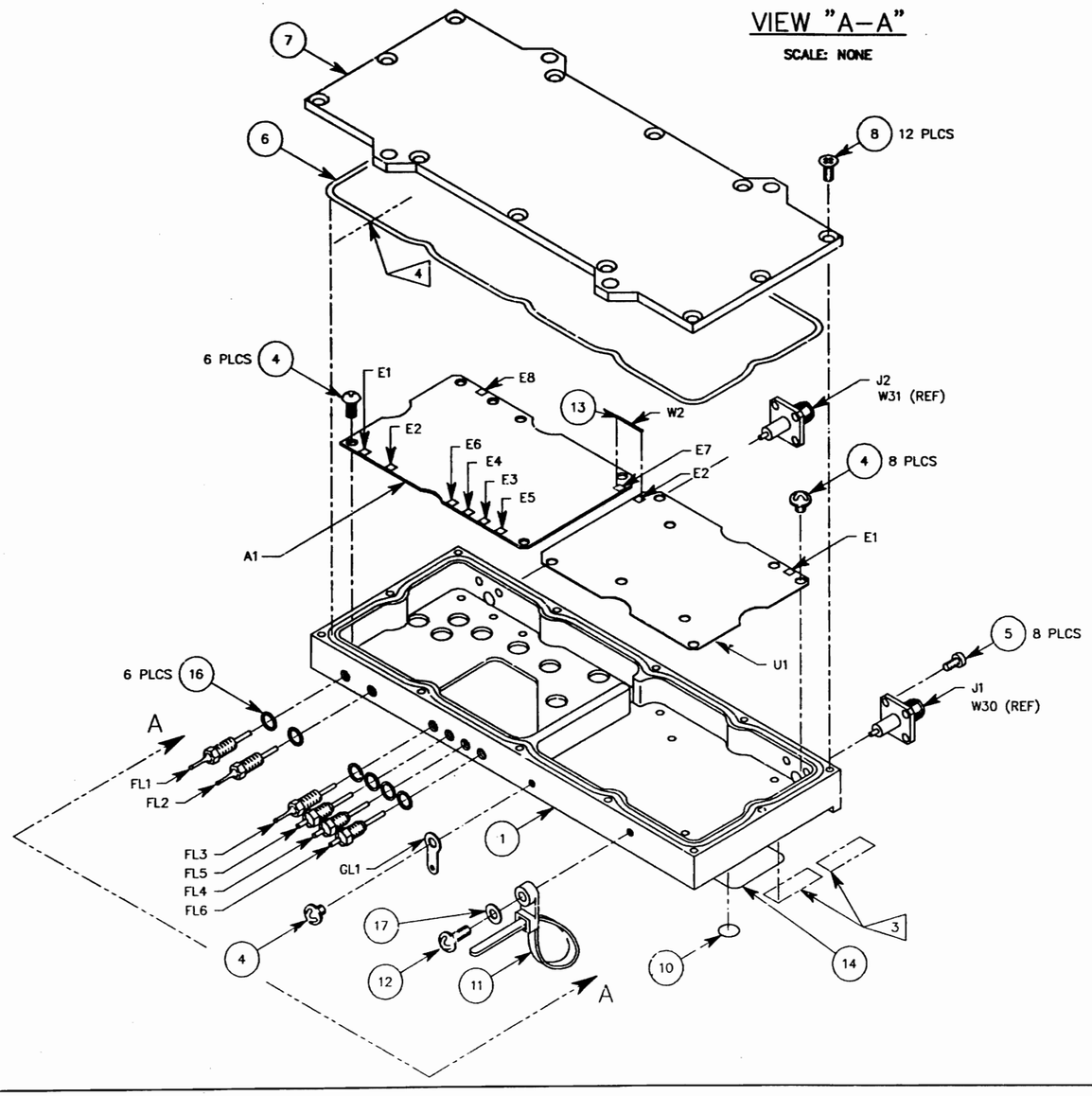

NOTES:

1. BASIC REFERENCE DESIGNATORS SHOWN, FOR COMPLETE DESIGNATOR PREFIXES REFER TO PRODUCT STRUCTURE, AND SYSTEM INTERCONNECT FOR APPLICATIONS WHERE USED.
2. MECH. ASS'Y DRAWING SHOWS ONLY PORTIONS OF PC BD ASSY'S REQUIRED FOR REF. ONLY.

<3> AFFIX MODULE IDENTIFICATION LABELS HERE.

<4> CUT ENDS OF GASKET MUST MEET UNDER COMPRESSION WHEN INSTALLED.

WIRE RUNNING LIST				
DESG	FROM	TO	COLOR	AWG
W1W1	P1-1	FL1	RED	26
W1W2	P1-2	GND1	BLACK	26
W1W3	P1-3	FL2	YELLOW	26
W1W4	P1-4	FL3	WHT/RED	26
W1W5	P1-5	FL4	WHT/GRN	26
W1W6	P1-6	FL5	WHT/BLUE	26
W1W7	P1-7	FL6	GRAY	26
W2	A1E7	A5E2	BUS	26

CAUTION:
CONTAINS PARTS AND ASSEMBLIES SUSCEPTIBLE TO DAMAGE BY ELECTROSTATIC DISCHARGE (ESD).

IFR SYSTEMS INC
10600 West York St., Wichita, Kansas 67215

DRAWN DATE	S. PERKINS 4/8/92
CHECKED DATE	D.BROKSCHMIDT 8/14/92
APPROVED DATE	S.STARKEL 8/14/92
	087423D4.DWG

TITLE: MECH ASSY, GENERATOR OUTPUT

SIZE D | DWG. NO. 7005-8742-300 | REV D4

PLOT SCALE 1=1 | SCALE 1=1 | CAGE 51195 | SHEET 1 OF 1

DATE	REV	CHANGE		APVD
8-14-92	D	DESIGN RELEASE	RLA	DKB
4-27-93	D1	PROD REL PER ECN 15564	MKM	DKB
4-14-94	D2	INC ECN 15988	RLA	BM

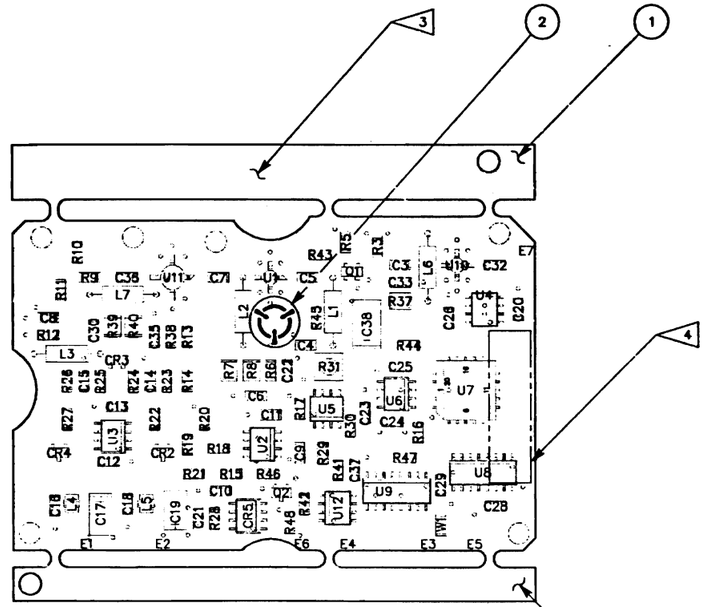

NOTES:

1. BASIC REFERENCE DESIGNATORS SHOWN, FOR COMPLETE DESIGNATOR PREFIXES REFER TO PRODUCT STRUCTURE, AND SYSTEM INTERCONNECT FOR APPLICATIONS WHERE USED.
2. REF SCHEMATIC # 0000-8742-300.
3. TO BE REMOVED PRIOR TO MECH. ASSY.
4. AFFIX MODULE IDENT LABEL HERE. TO BE INSTALLED ON BOTTOM SIDE ONLY.

CAUTION:
CONTAINS PARTS AND ASSEMBLIES SUSCEPTIBLE TO DAMAGE BY ELECTROSTATIC DISCHARGE (ESD).

	IFR SYSTEMS INC 10200 West York St., Wichita, Kansas 67215
DRAWN DATE: C.J. WEBB 5/23/91	TITLE: ASSY DRAWING GENERATOR OUTPUT BOARD
CHECKED DATE: S. STARKEL 6/4/91	
APPROVED DATE: B.LANGRIDGE 6/4/91	SIZE: C; DWG NO.: 7010-8732-300; REV: D2
108723D2.PLT	SCALE: 1:1; DO NOT SCALE; FSCM 51190; SHEET 1 OF 1

Scans by ArtekMedia © 2008

Scans by ArtekMedia © 2008

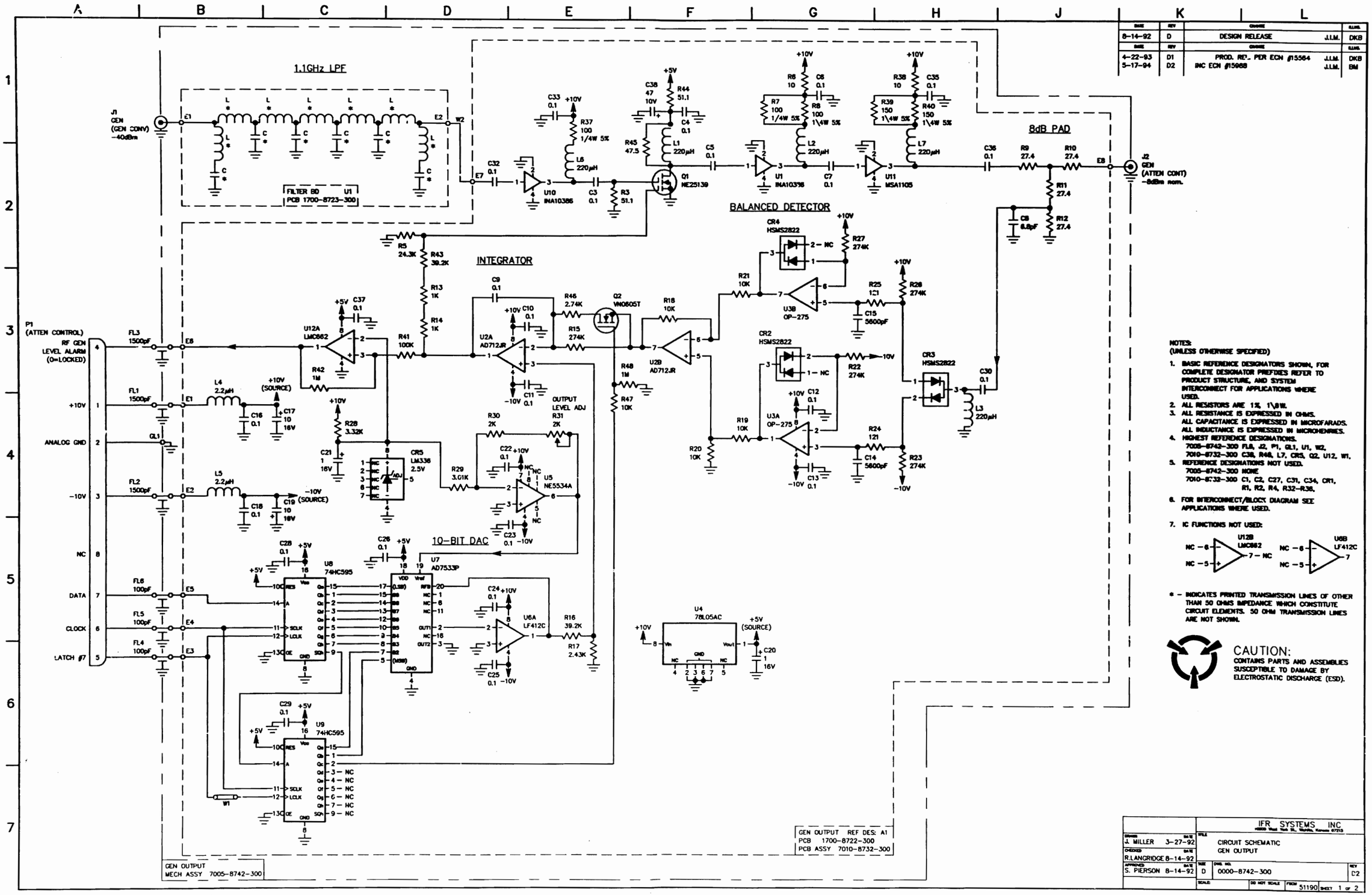

DATE	REV	CHANGE		ILLNG.
8-14-92	D	DESIGN RELEASE	J.I.M.	DKB
DATE	REV	CHANGE		ILLNG.
4-22-93	D1	PROD. REL. PER ECN #15564	J.I.M.	DKB
5-17-94	D2	INC ECN #15968	J.I.M.	BM

NOTES:
(UNLESS OTHERWISE SPECIFIED)

1. BASIC REFERENCE DESIGNATORS SHOWN, FOR COMPLETE DESIGNATOR PREFIXES REFER TO PRODUCT STRUCTURE, AND SYSTEM INTERCONNECT FOR APPLICATIONS WHERE USED.
2. ALL RESISTORS ARE 1%, 1\8W.
3. ALL RESISTANCE IS EXPRESSED IN OHMS. ALL CAPACITANCE IS EXPRESSED IN MICROFARADS. ALL INDUCTANCE IS EXPRESSED IN MICROHENRIES.
4. HIGHEST REFERENCE DESIGNATIONS. 7005-8742-300 FL8, J2, P1, GL1, U1, W2, 7010-8732-300 C38, R48, L7, CR5, Q2, U12, W1.
5. REFERENCE DESIGNATIONS NOT USED. 7005-8742-300 NONE 7010-8732-300 C1, C2, C27, C31, C34, CR1, R1, R2, R4, R32-R36.
6. FOR INTERCONNECT/BLOCK DIAGRAM SEE APPLICATIONS WHERE USED.
7. IC FUNCTIONS NOT USED:

* - INDICATES PRINTED TRANSMISSION LINES OF OTHER THAN 50 OHMS IMPEDANCE WHICH CONSTITUTE CIRCUIT ELEMENTS. 50 OHM TRANSMISSION LINES ARE NOT SHOWN.

CAUTION:
CONTAINS PARTS AND ASSEMBLIES SUSCEPTIBLE TO DAMAGE BY ELECTROSTATIC DISCHARGE (ESD).

IFR SYSTEMS INC

DRAWN J. MILLER 3-27-92	TITLE CIRCUIT SCHEMATIC GEN OUTPUT		
CHECKED R.LANGRIDGE 8-14-92			
APPROVED S. PIERSON 8-14-92	SIZE D	DWG. NO. 0000-8742-300	REV C2
	SCALE	DO NOT SCALE	FSCM 51190 SHEET 1 OF 2

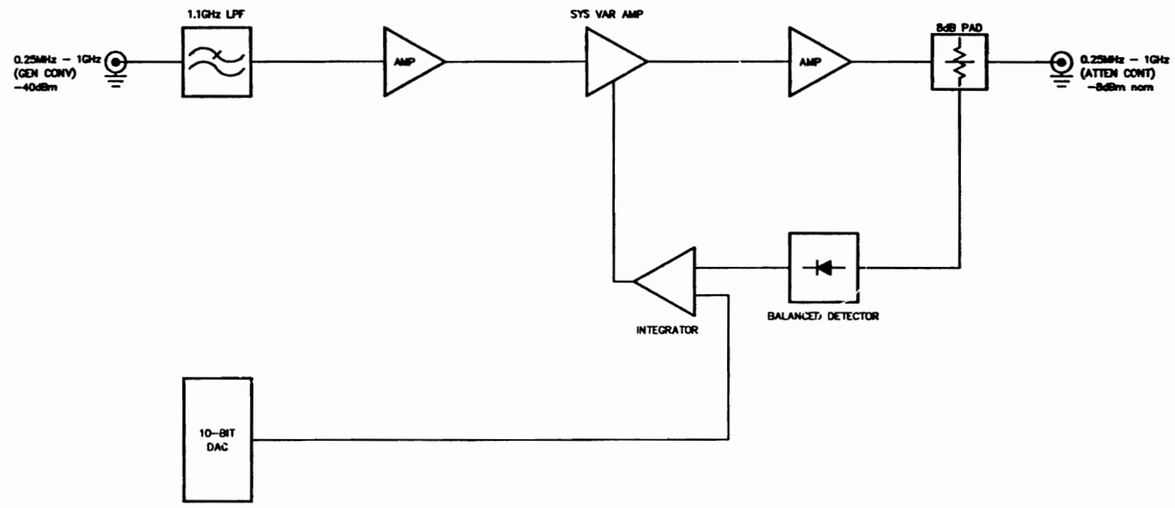

Scans by ArtekMedia © 2008

Scans by ArtekMedia © 2008

DATE	REV	CHANGE	APVD
8-22-94	A	PROD REL PER ECN 16141 J.I.M.	BM

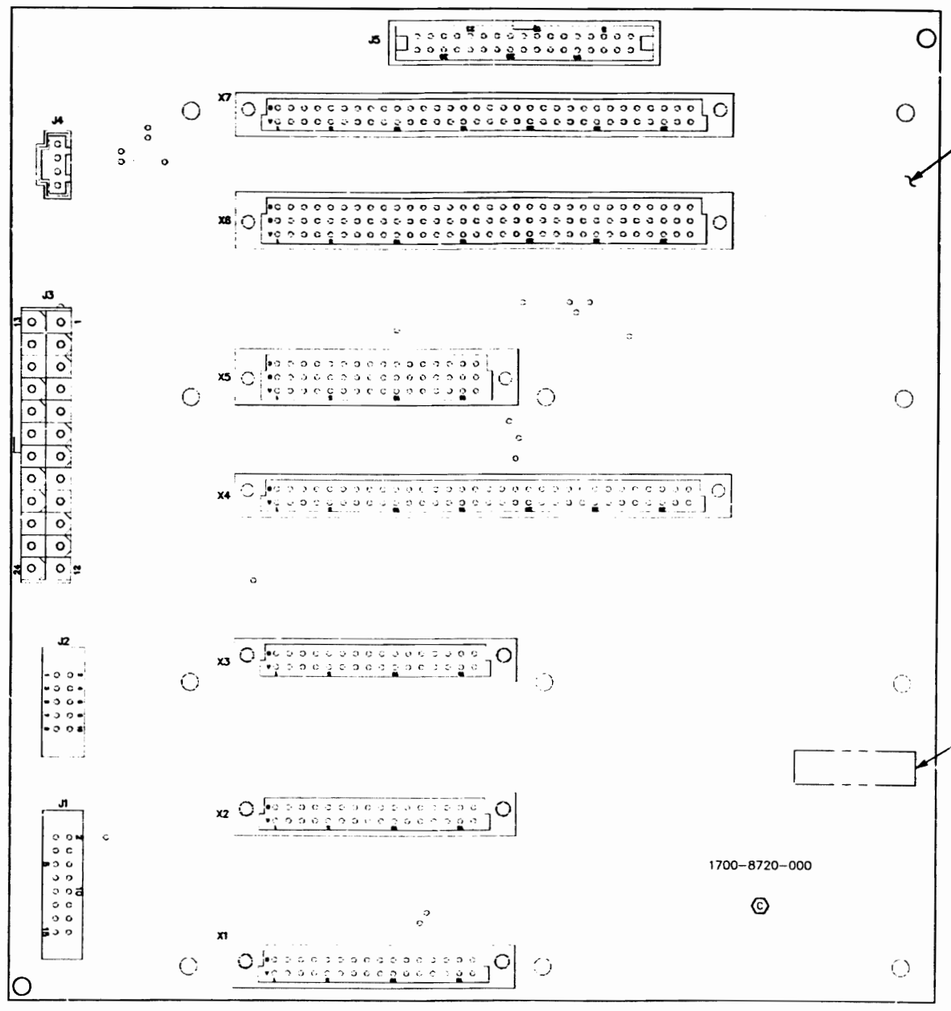

NOTES:

1. BASIC REFERENCE DESIGNATORS SHOWN, FOR COMPLETE DESIGNATOR PREFIXES REFER TO PRODUCT STRUCTURE, AND SYSTEM INTERCONNECT FOR APPLICATIONS WHERE USED.
2. REF SCHEMATIC # 0000-8730-000.
3. AFFIX MODULE IDENT LABEL HERE.

CAUTION:
CONTAINS PARTS AND ASSEMBLIES SUSCEPTIBLE TO DAMAGE BY ELECTROSTATIC DISCHARGE (ESD).

DRAWN R. WEEKS 2-13-92	IFR SYSTEMS INC 10200 West York St., Wichita, Kansas 67215	
CHECKED D.K.B. 8-26-92	TITLE: ASSEMBLY DWG MOTHERBOARD	
APPROVED S.PIERSON 8-26-92	SIZE D	DWG. NO. 7010-0531-400 REV A
	SCALE: N.T.S.	DO NOT SCALE FSCM 51190 SHEET 1 OF 1

DATE	REV	CHANGE	APPROVED
8-26-92	C	DESIGN RELEASE	J.I.M. DKB
10-2-92	C1	INC REF #FMY-016	J.I.M. DKB
5-11-93	C2	PROD. REL. PER ECN #15584	J.I.M. DKB
12-4-94	D	INC ECN 16141A	BP BM

NOTES:
(UNLESS OTHERWISE SPECIFIED)

1. BASIC REFERENCE DESIGNATORS SHOWN, FOR COMPLETE DESIGNATOR PREFIXES REFER TO PRODUCT STRUCTURE, AND SYSTEM INTERCONNECT FOR APPLICATIONS WHERE USED.
2. ALL RESISTORS ARE X %, X W.
3. ALL RESISTANCE IS EXPRESSED IN OHMS. ALL CAPACITANCE IS EXPRESSED IN MICROFARADS. ALL INDUCTANCE IS EXPRESSED IN MICROHENRIES.
4. HIGHEST REFERENCE DESIGNATIONS. J12
5. REFERENCE DESIGNATIONS NOT USED. NONE
6. FOR INTERCONNECT/BLOCK DIAGRAM SEE APPLICATIONS WHERE USED.
7. IC FUNCTIONS NOT USED: NONE

• — INDICATES PRINTED TRANSMISSION LINES OF OTHER THAN 50 OHMS IMPEDANCE WHICH CONSTITUTE CIRCUIT ELEMENTS. 50 OHM TRANSMISSION LINES ARE NOT SHOWN.

CAUTION:
CONTAINS PARTS AND ASSEMBLIES SUSCEPTIBLE TO DAMAGE BY ELECTROSTATIC DISCHARGE (ESD).

MOTHERBOARD
PCB 1700-8720-000
PCB ASSY 7010-0631-400

DRAWN R.JONES	DATE 3-20-91	IFR SYSTEMS INC 10200 West York St., Wichita, Kansas 67215
CHECKED E. SHIMONI	DATE 8-26-92	TITLE CIRCUIT SCHEMATIC MOTHERBOARD
APPROVED M. BACHMAN	DATE 8-26-92	SIZE D · DWG. NO. 0000-8730-000 · REV D
087B300C.DWG		SCALE: DO NOT SCALE · FSCM 51190 · SHEET 1 OF 1

Scans by ArtekMedia © 2008

Scans by ArtekMedia © 2008

DATE	REV	CHANGE	APVD
9-5-95	A	RELEASE PER ECN #16626 J.I.M.	DKB

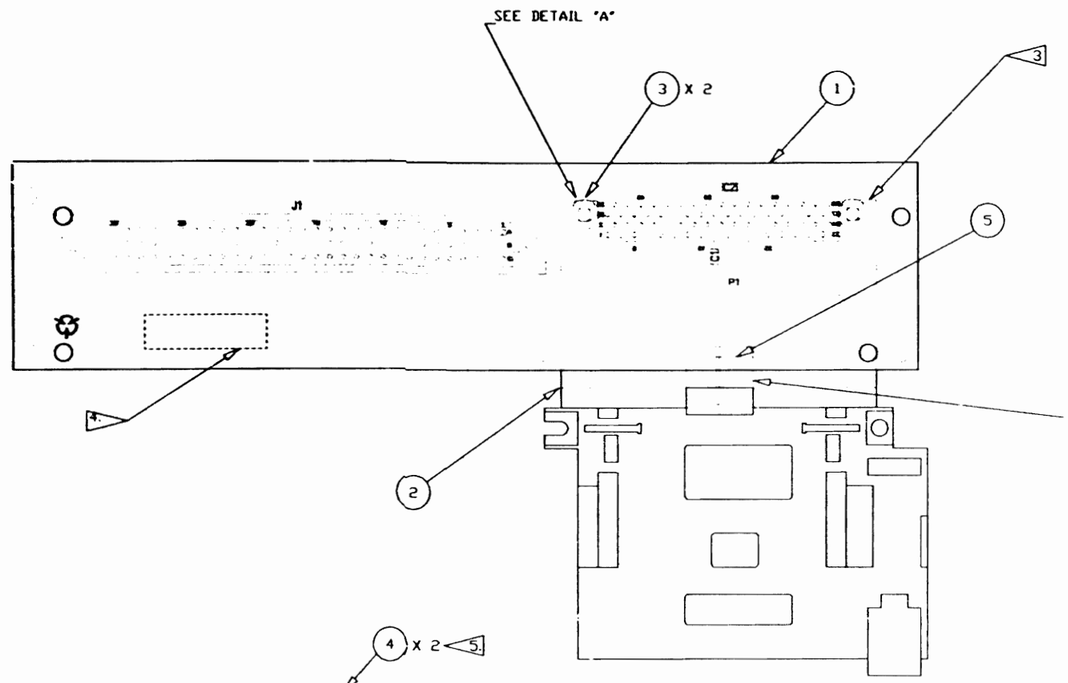

TOP VIEW

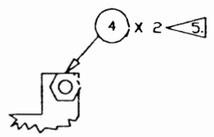

DETAIL "A"
BOTTOM VIEW

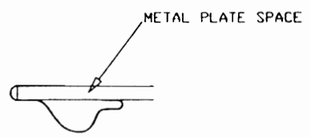

DETAIL "B"
SIDE VIEW

NOTES:

1. BASIC REFERENCE DESIGNATORS SHOWN, FOR COMPLETE DESIGNATOR PREFIXES REFER TO PRODUCT STRUCTURE, AND SYSTEM INTERCONNECT FOR APPLICATIONS WHERE USED.
2. HARDWARE THAT IS NOT PART OF BILL OF MATERIALS SHOULD NOT BE INSTALLED.
3. INSTALL ON BOTTOM SIDE.
4. AFFIX MODULE IDENT LABEL HERE.
5. BEFORE INSTALLING NUTS (ITEM 4), REMOVE AND DISCARD METRIC NUTS WHICH ARE SUPPLIED WITH CONN (P1).

CAUTION
CONTAINS PARTS AND ASSEMBLIES SUSCEPTIBLE TO DAMAGE BY ELECTROSTATIC DISCHARGE (ESD).

IFR SYSTEMS INC
1800 West Park St, Wichita, Kansas 67213

DRAWN J. MILLER	DATE 6-27-95	TITLE: ASSEMBLY DRAWING PCMCIA INTERFACE
CHECKED DKB	DATE 9-5-95	
APPROVED STAN P.	DATE 9-5-95	SIZE D · DWG NO 7010-0631-800 · REV A
100618A0.PLT		SCALE N.T.S. · DO NOT SCALE · PROM 51190 · SHEET 1 OF 1

DATE	REV	CHANGE	APPROVED
9-5-95	A	RELEASE PER ECN #16626 J.I.M.	DBK

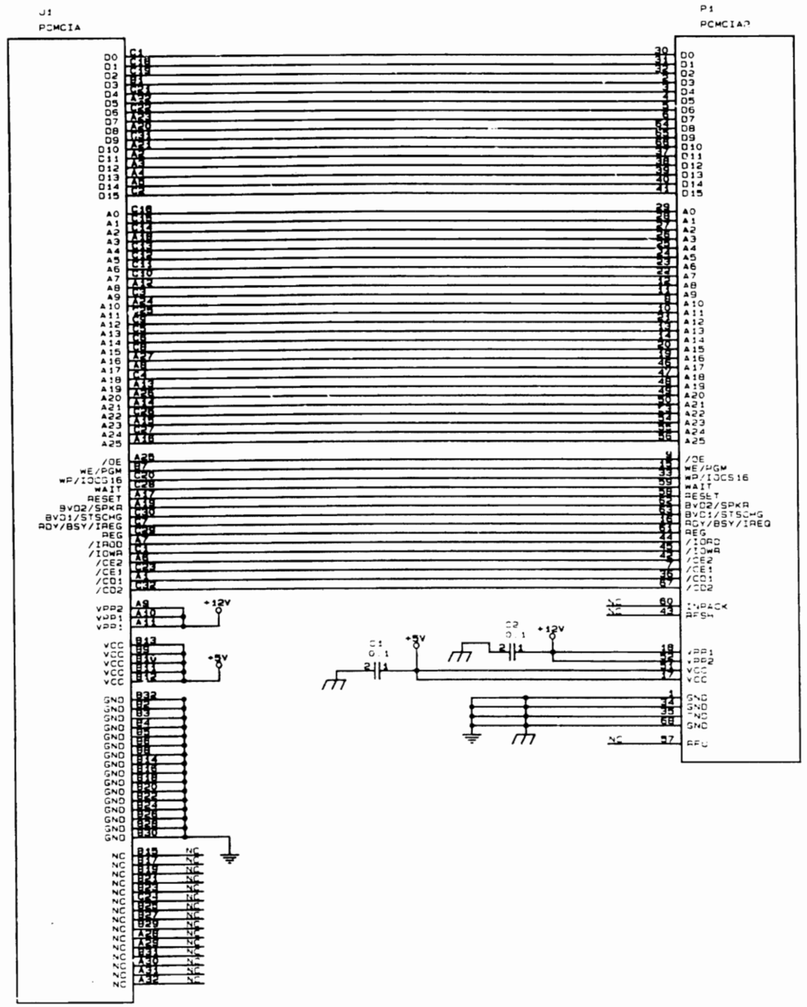

NOTES.
(UNLESS OTHERWISE SPECIFIED)

1. BASIC REFERENCE DESIGNATORS SHOWN. FOR COMPLETE DESIGNATOR PREFIXES REFER TO PRODUCT STRUCTURE AND SYSTEM INTERCONNECT FOR APPLICATIONS WHERE USED.
2. ALL RESISTORS ARE 5%, 1/4W.
3. ALL RESISTANCE IS EXPRESSED IN OHMS.
   ALL CAPACITANCE IS EXPRESSED IN MICROFARADS
   ALL INDUCTANCE IS EXPRESSED IN MICROHENRIES
4. HIGHEST REFERENCE DESIGNATIONS: J1, P1, C2.
5. REFERENCE DESIGNATIONS NOT USED: NONE
6. FOR INTERCONNECT/BLOCK DIAGRAM SEE APPLICATIONS WHERE USED.
7. IC FUNCTIONS NOT USED: NONE

*- INDICATES PRINTED TRANSMISSION LINES OF OTHER THAN 50 OHMS IMPEDANCE WHICH CONSTITUTE CIRCUIT ELEMENTS. 50 OHM TRANSMISSION LINES ARE NOT SHOWN.

CAUTION:
CONTAINS PARTS AND ASSEMBLIES SUSCEPTIBLE TO DAMAGE BY ELECTROSTATIC DISCHARGE (ESD).

DRAWN: J. MILLER	4-3-95	VFR SYSTEMS INC. 10200 W. YORK ST.
CHECKED: DKB	9-5-95	Title: SCHEMATIC, PCMCIA INTERFACE
APPROVED: S. PIERSON	4-5-95	Size: C; Document Number: 0000-0831-900; REV: A
		Date: September 7, 1995; Sheet 1 of 1

Scans by ArtekMedia © 2008

Scans by ArtekMedia © 2008

DATE	REV	CHANGE	APVD
4-18-96	A	RELEASE PER ECN 16881 RLA	DKB

TOP VIEW

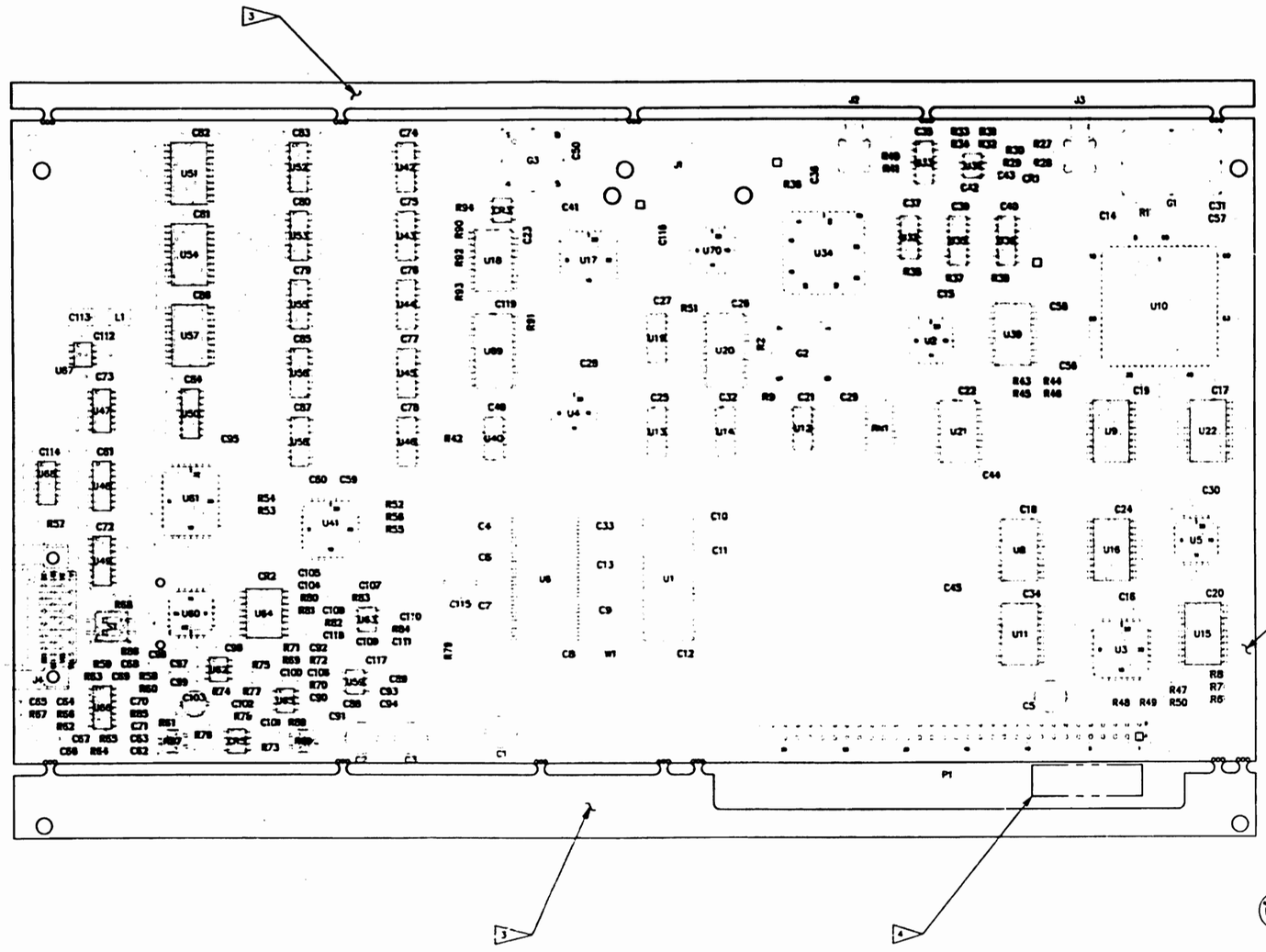

NOTES:

1. BASIC REFERENCE DESIGNATORS SHOWN, FOR COMPLETE DESIGNATOR PREFIXES REFER TO PRODUCT STRUCTURE, AND SYSTEM INTERCONNECT FOR APPLICATIONS WHERE USED.
2. NOTE NOT USED.
3. TO BE REMOVED PRIOR TO MECH. ASSY.
4. AFFIX MODULE IDENT LABEL HERE.

CAUTION:
CONTAINS PARTS AND ASSEMBLIES SUSCEPTIBLE TO DAMAGE BY ELECTROSTATIC DISCHARGE (ESD).

DRAWN M.K.MOFFITT 1-30-96	IFR SYSTEMS INC. 10200 West York St., Wichita, Kansas 67215
CHECKED DKB 2-5-96	TITLE: ASSEMBLY DWG VIDEO CNTR/FCTN GEN
APPROVED S.PIERSON 2-5-96	SIZE D · DWG. NO. 7010-0632-300 · REV A
100623A0.PLT	SCALE: N.T.S. · DO NOT SCALE · FSCM 51190 · SHEET 1 OF 2

DATE	REV	CHANGE	APVD
		- SEE SHEET 1 -	

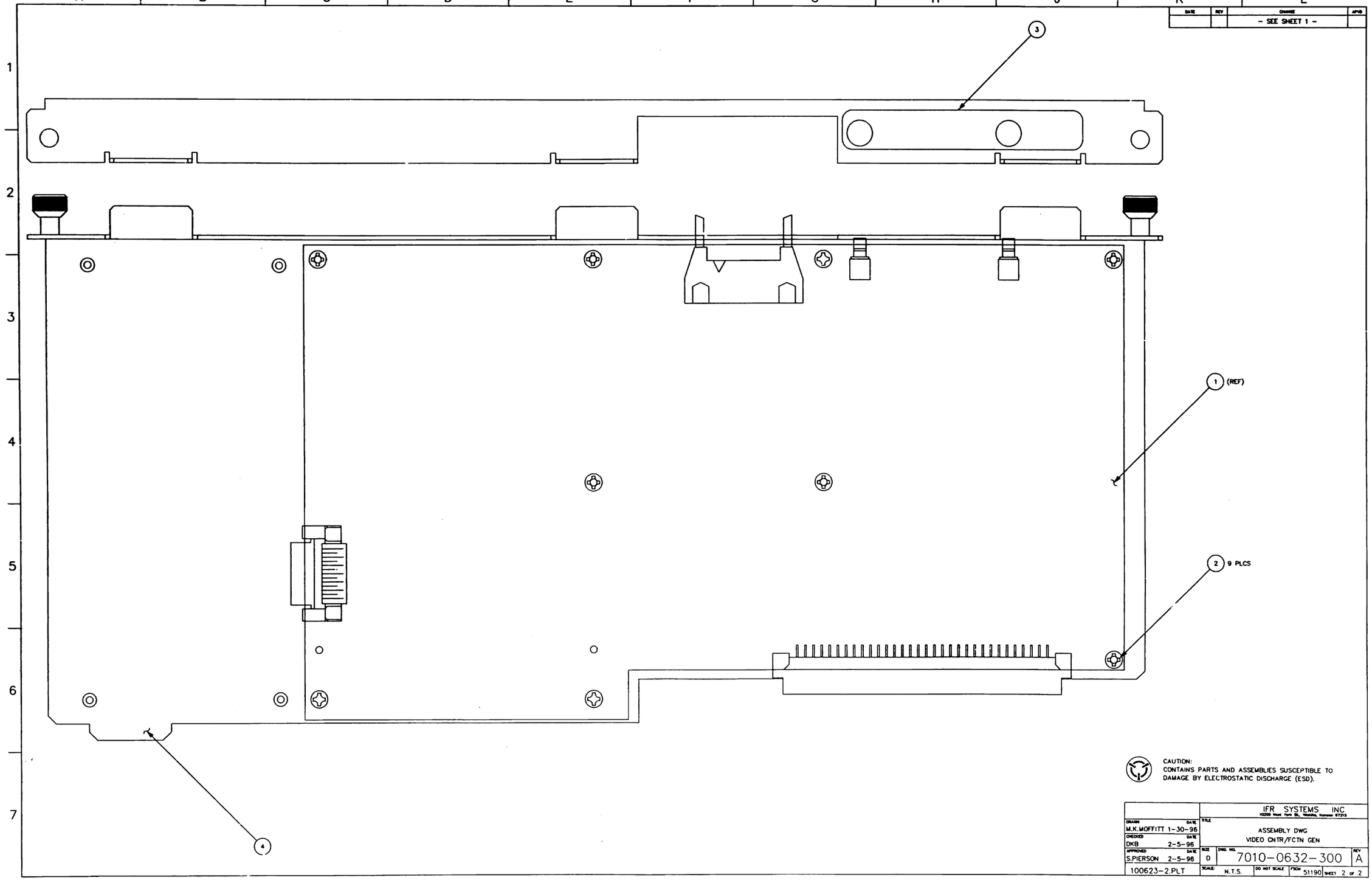

CAUTION:
CONTAINS PARTS AND ASSEMBLIES SUSCEPTIBLE TO DAMAGE BY ELECTROSTATIC DISCHARGE (ESD).

DRAWN M.K.MOFFITT 1-30-96	IFR SYSTEMS INC 10200 West York St., Wichita, Kansas 67215
CHECKED DKB 2-5-96	TITLE ASSEMBLY DWG VIDEO CNTR/FCTN GEN
APPROVED S.PIERSON 2-5-96	SIZE D · DWG NO. 7010-0632-300 · REV A
100623-2.PLT	SCALE N.T.S. · DO NOT SCALE · FSCM 51190 · SHEET 2 of 2

Scans by ArtekMedia © 2008

Scans by ArtekMedia © 2008

DATE	REV	CHANGE	APPROVED
4-18-96	A	RELEASE PER ECN #15881 J.I.M.	DKB

NOTES:
(UNLESS OTHERWISE SPECIFIED)

1. BASIC REFERENCE DESIGNATORS SHOWN. FOR COMPLETE DESIGNATOR PREFIXES REFER TO PRODUCT STRUCTURE AND SYSTEM INTERCONNECT FOR APPLICATIONS WHERE USED.
2. ALL RESISTORS ARE 1%, 1/8W.
3. ALL RESISTANCE IS EXPRESSED IN OHMS.
   ALL CAPACITANCE IS EXPRESSED IN MICROFARADS.
   ALL INDUCTANCE IS EXPRESSED IN MICROHENRIES.
4. HIGHEST REFERENCE DESIGNATIONS:
   U70 C119 CR5 R98 P1 J4 G3 TB3 E3 L1 RN1 S1 TP7
5. REFERENCE DESIGNATIONS NOT USED:

   C38, C46, C47, C48, C51, C52, C53, C54, C55 . U23, U24, U25, U26, U27, U28, U29, U30, U7, CR4

   R3, R4, R5, R10, R11, R12, R13, R14, R15, R16, R17, R18, R19, R20, R21, R22, R23, R24, R25, R26, R38

   REFERENCE DESIGNATIONS NOT INSTALLED:

   E1-E3, TB1-TB3, TP1-TP7, U37, U38
6. FOR INTERCONNECT/BLOCK DIAGRAM SEE APPLICATIONS WHERE USED.
7. IC FUNCTIONS NOT USED:

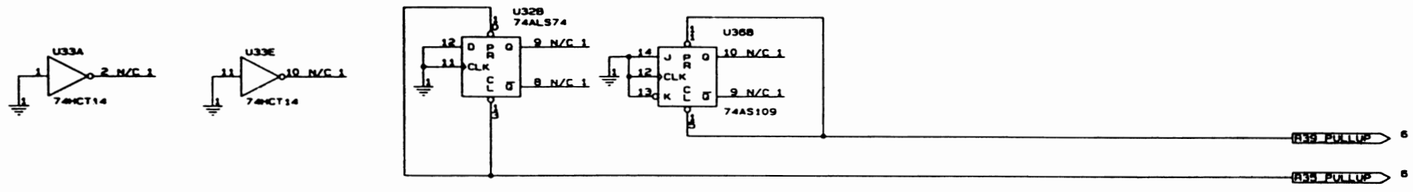

*- INDICATES PRINTED TRANSMISSION LINES OF OTHER THAN 50 OHMS IMPEDANCE WHICH CONSTITUTE CIRCUIT ELEMENTS. 50 OHM TRANSMISSION LINES ARE NOT SHOWN.

CAUTION:

CONTAINS PARTS AND ASSEMBLIES SUSCEPTIBLE TO DAMAGE BY ELECTROSATIC DISCHARGE (ESD).

8 INSTALL W1 WHEN USING TMS55165 FOR U6 DEVICE AND W2 NOT INSTALLED
INSTALL W2 WHEN USING TMS55160 FOR U6 DEVICE AND W1 NOT INSTALLED

9 E1-E3, TB1-TB3, TP1-TP7 FOR FUTURE ENGINEERING TEST ONLY

SCHEMATICS
006F323A.SCH

BLOCK DIAGRAM
006A323A.SCH

FILE NAME: 006E323A.SCH

DRAWN D. COX	10-25-94	IFA SYSTEMS, INC. 10200 W YORK STREET WICHITA, KS 67215-8935
CHECKED DKB	04-06-95	Title: Circuit Schematic, VIDEO CNTR/FCTN GEN
APPROVED STAN PIERSON	04-27-95	Size C; Document Number 0000-0632-300; REV A
		Date April 18, 1996; Sheet 1 of 13

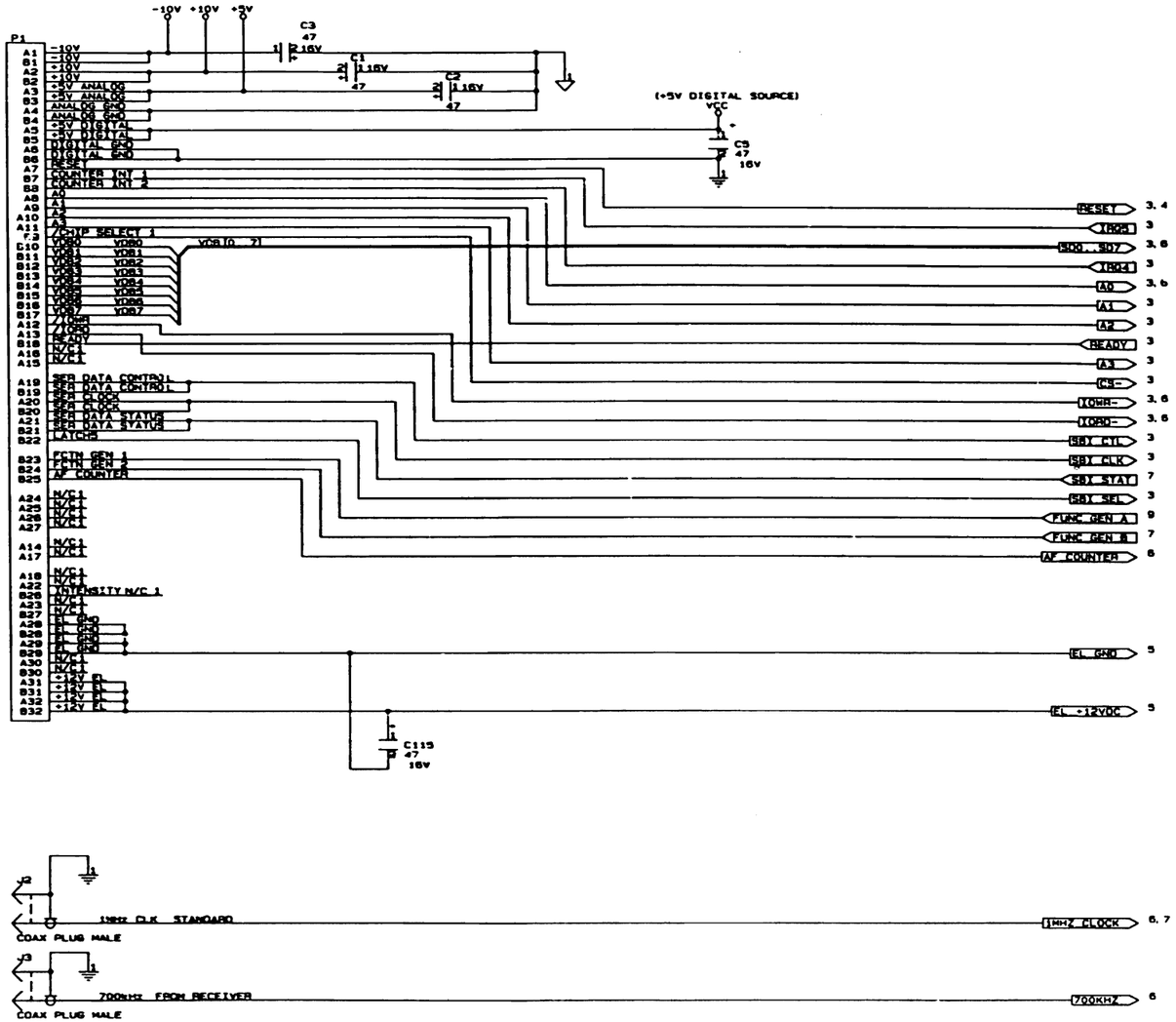

VIDEO PROCESSOR
006G323A.SCH
COUNTER SECTION
006H323A.SCH
FUNCTION GENERATOR
006I323A.SCH

IFR SYSTEMS, INC.
10200 W. YORK STREET
WICHITA, KS 67215-8935

Title
Circuit Schematic, VIDEO CNTR/FCTN GEN

Size	Document Number	REV
C	0000-0632-300	A

Date: April 18, 1995 Sheet 2 of 13

Scans by ArtekMedia © 2008

Scans by ArtekMedia © 2008

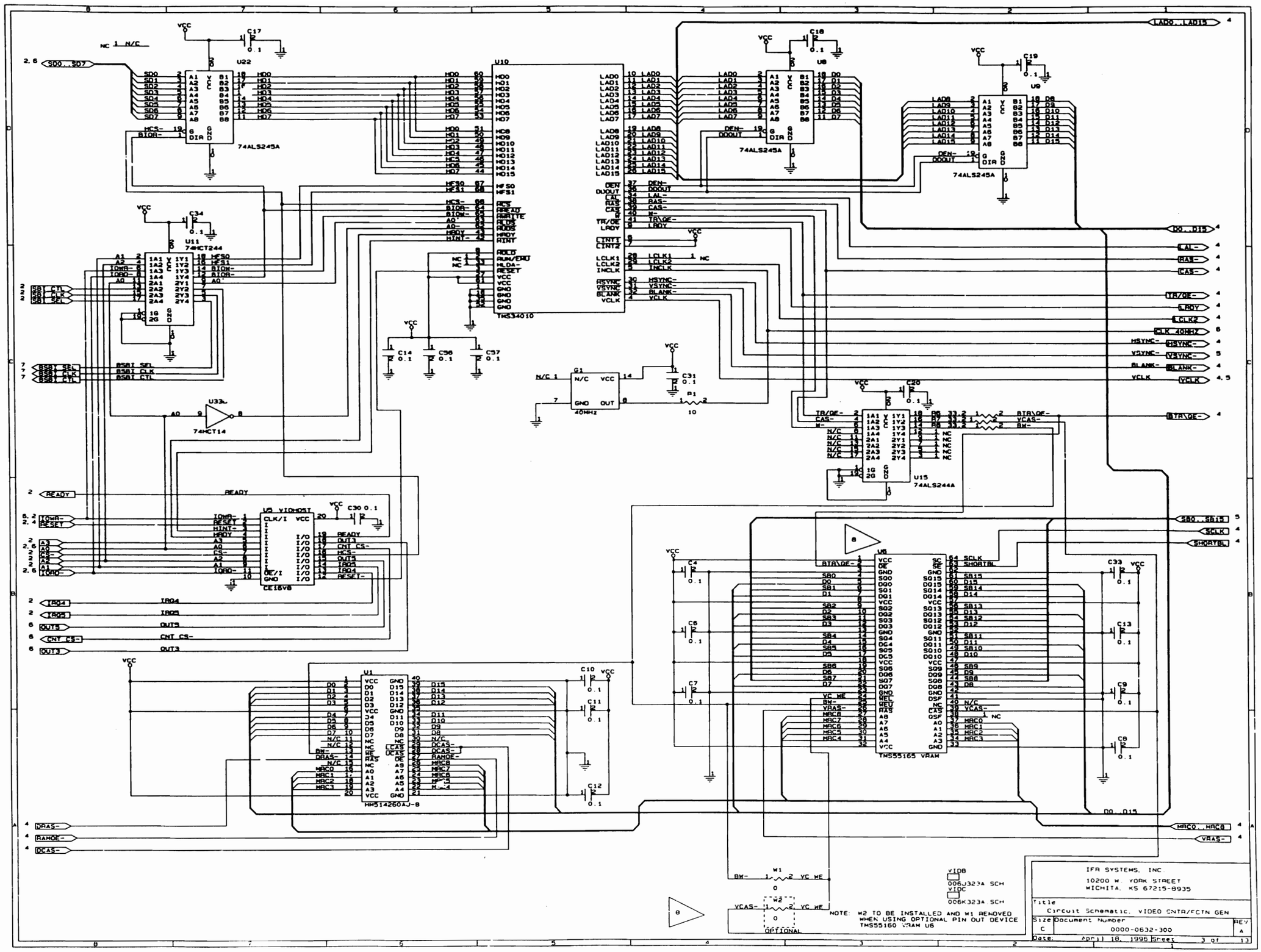

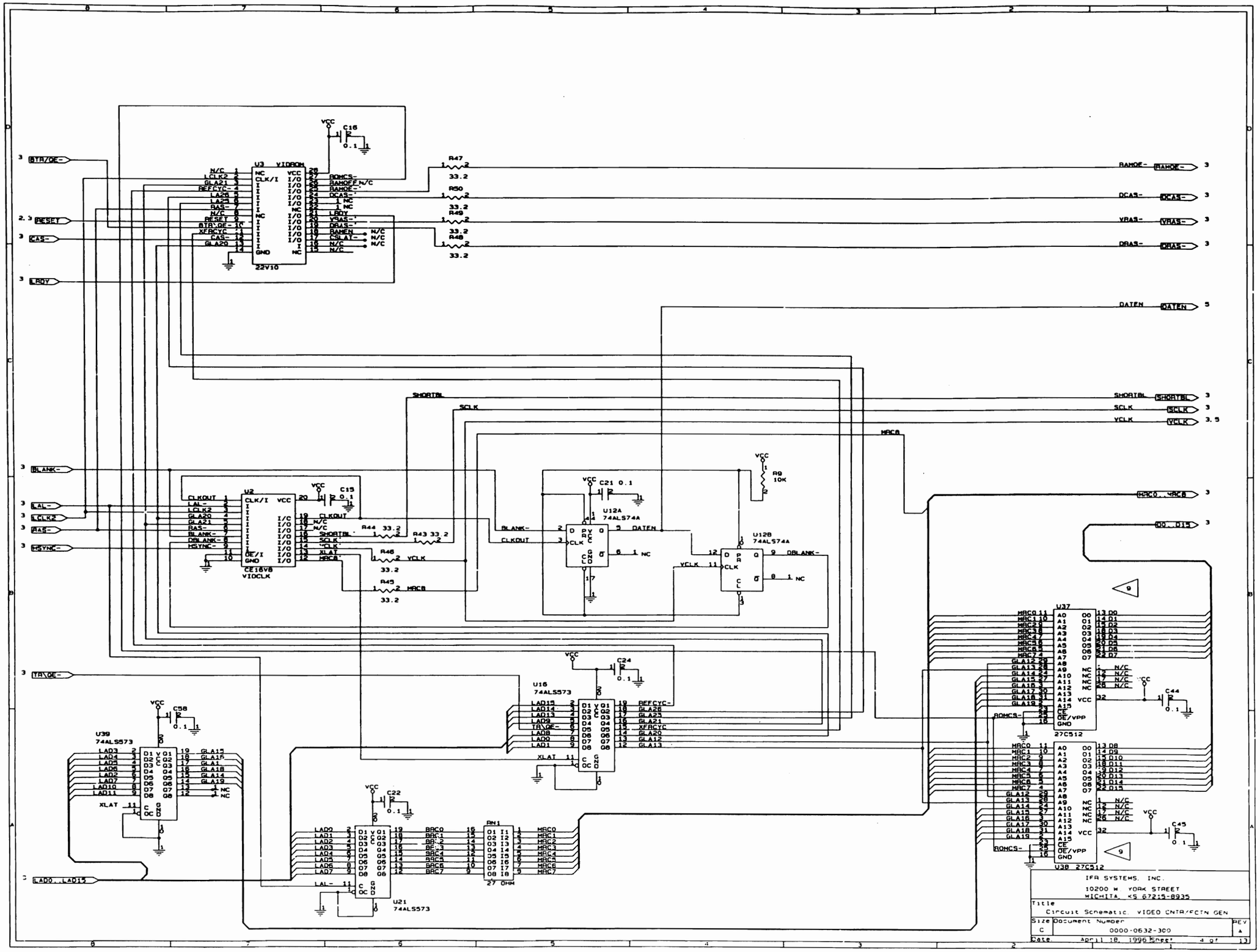

Scans by ArtekMedia © 2008

Scans by ArtekMedia © 2008

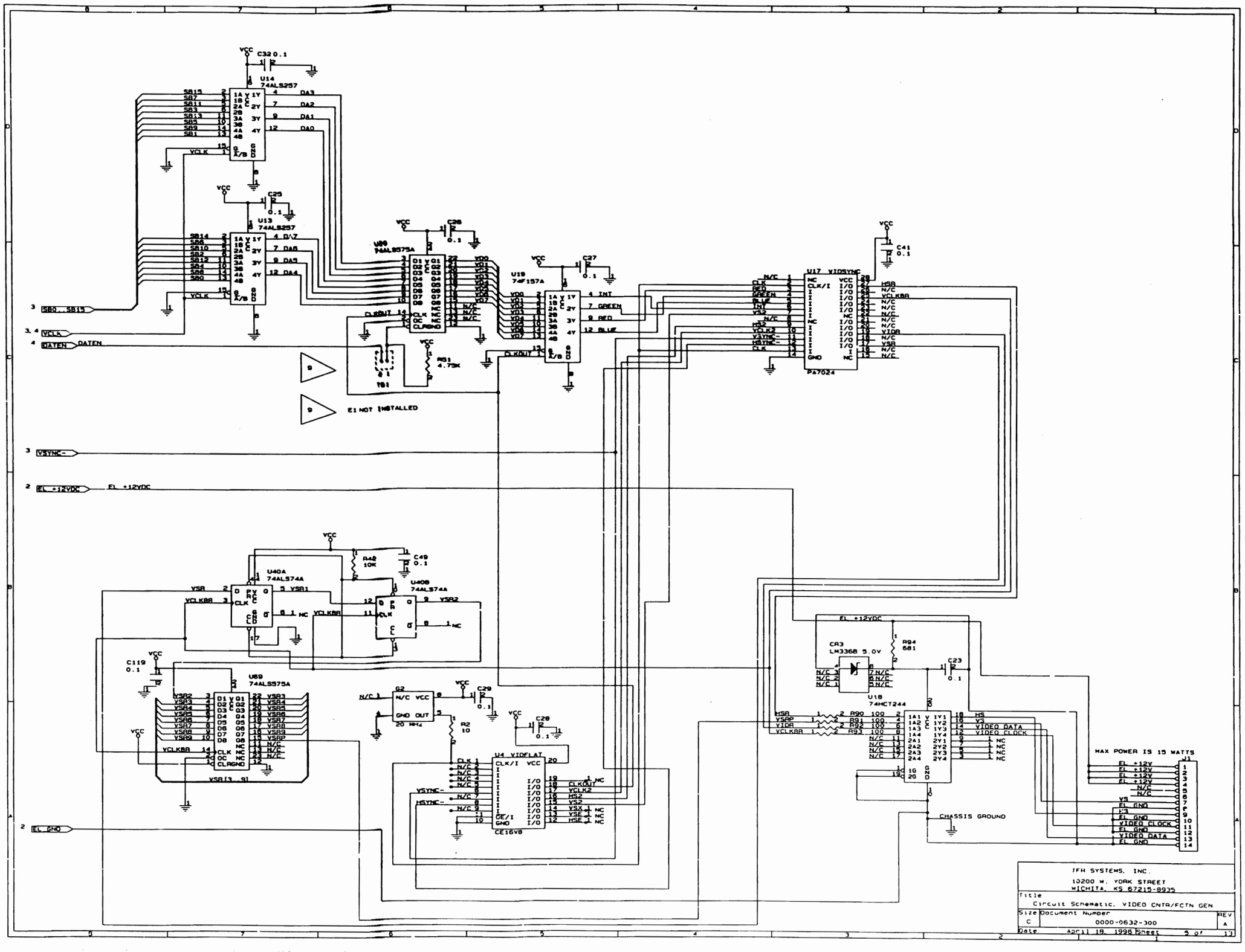

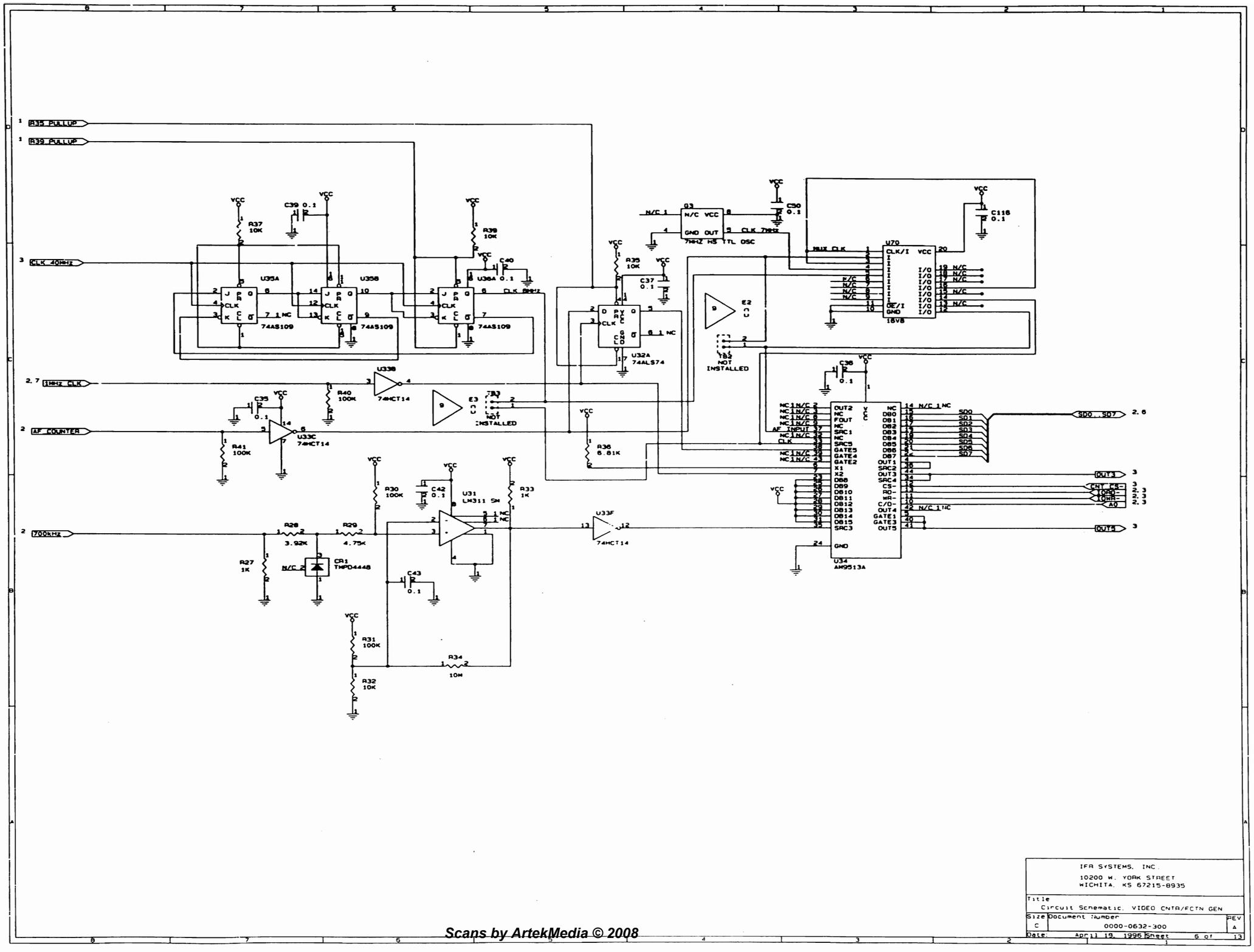

Scans by ArtekMedia © 2008

IFR SYSTEMS, INC.
10200 W. YORK STREET
WICHITA, KS 67215-8935

Title: Circuit Schematic. VIDEO CNTR/FCTN GEN

Size	Document Number	REV
C	0000-0632-300	A

Date: April 19, 1996 Sheet 5 of 13

Scans by ArtekMedia © 2008

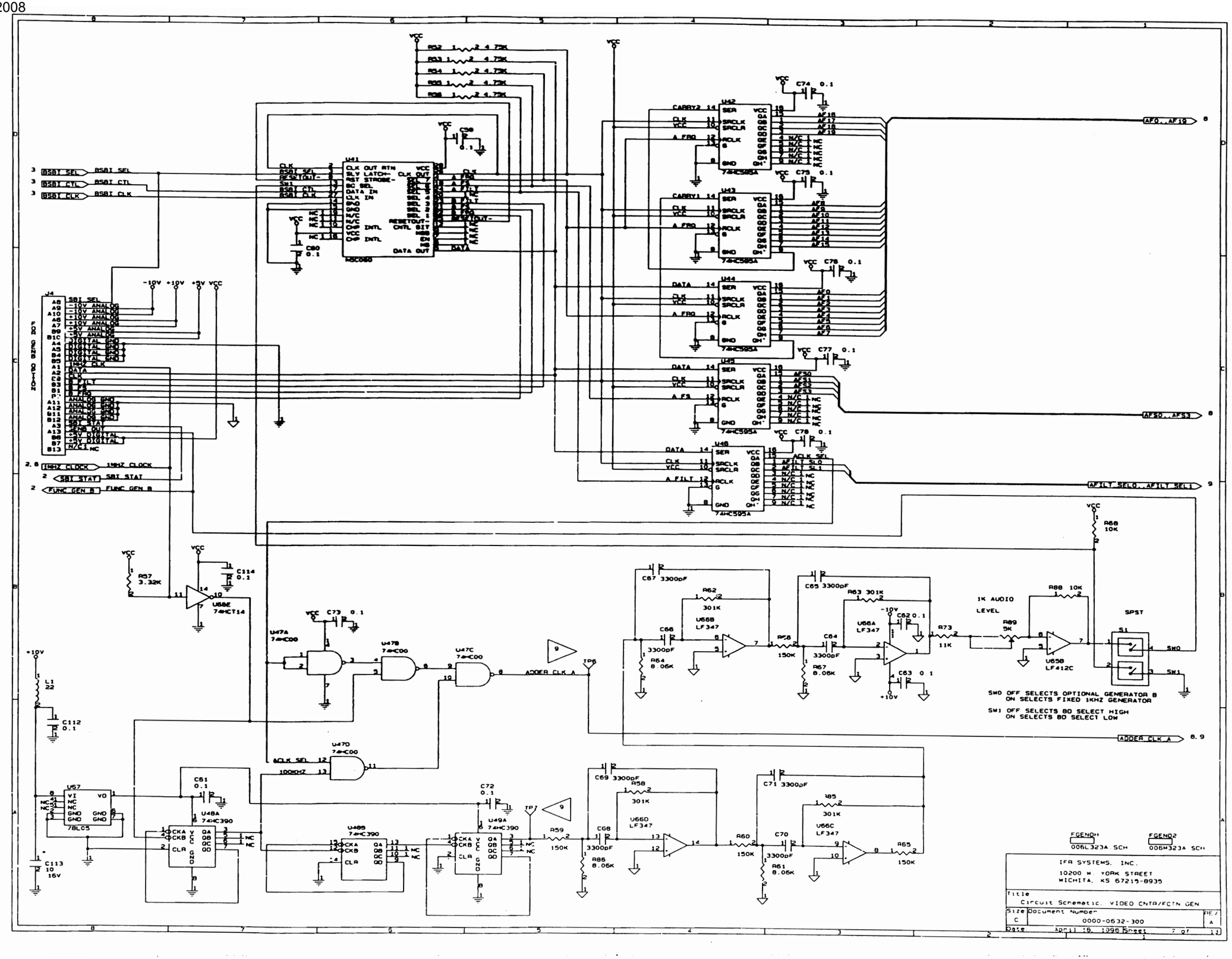

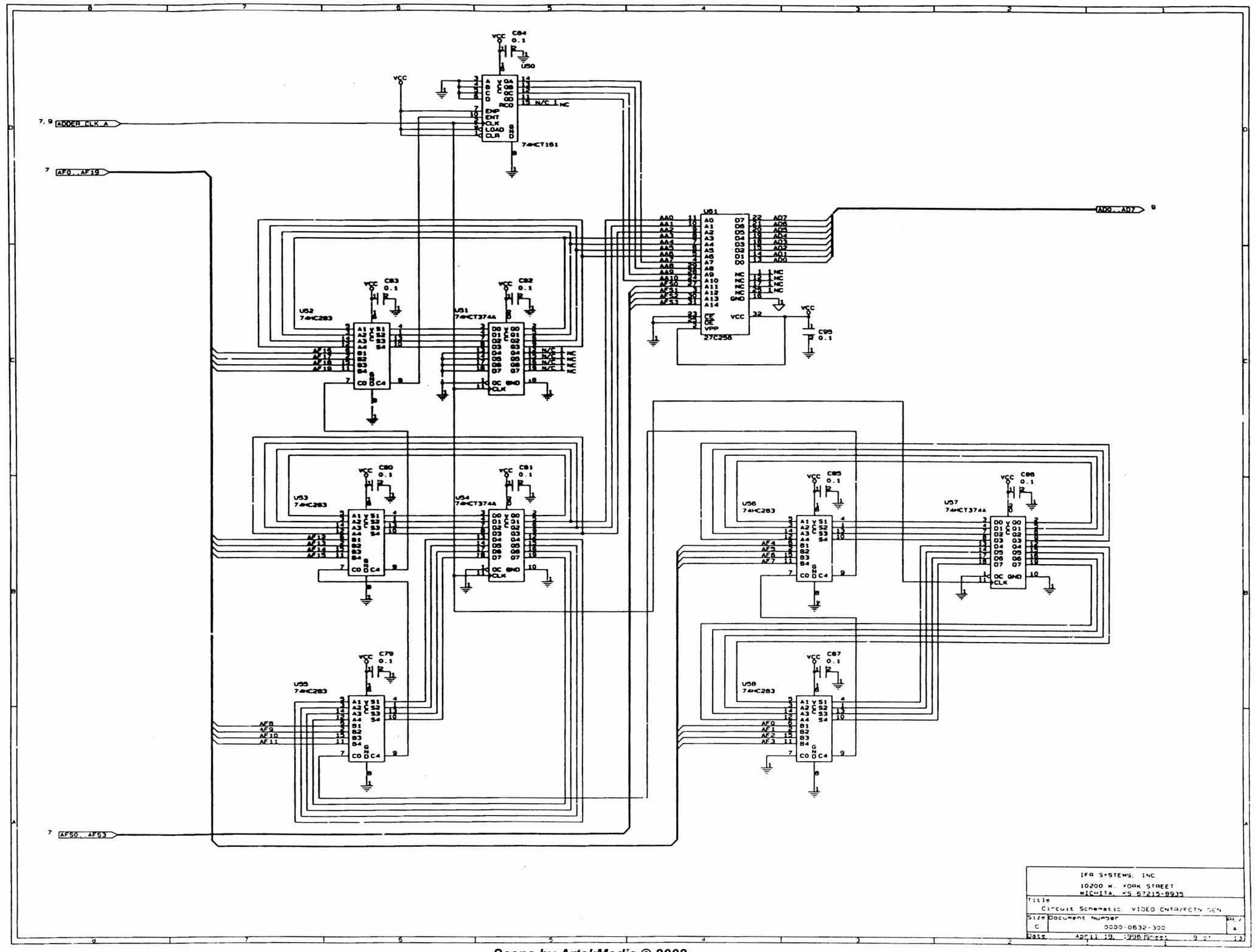

Scans by ArtekMedia © 2008

Scans by ArtekMedia © 2008

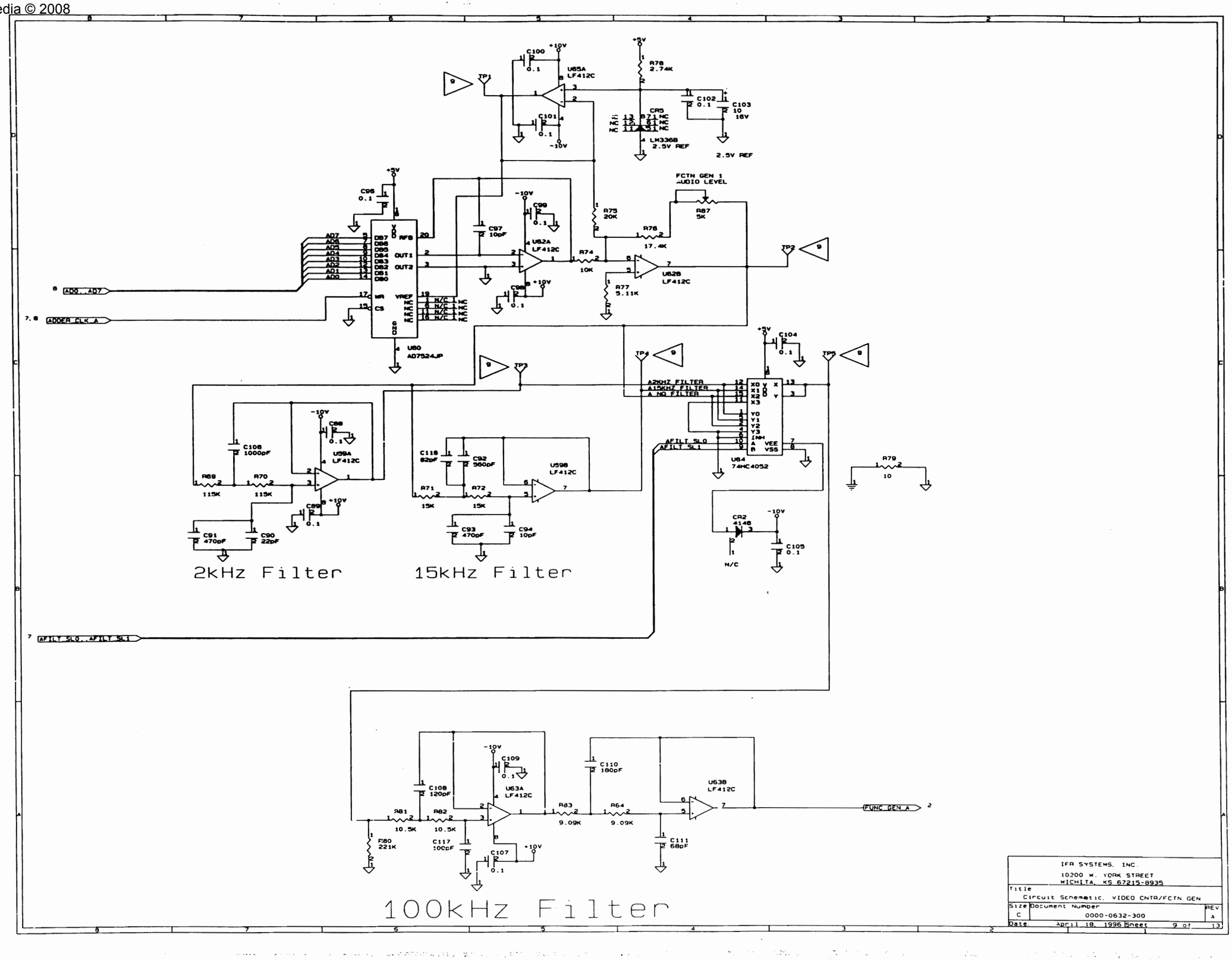

DIGITAL TRAY
BLOCK DIAGRAM

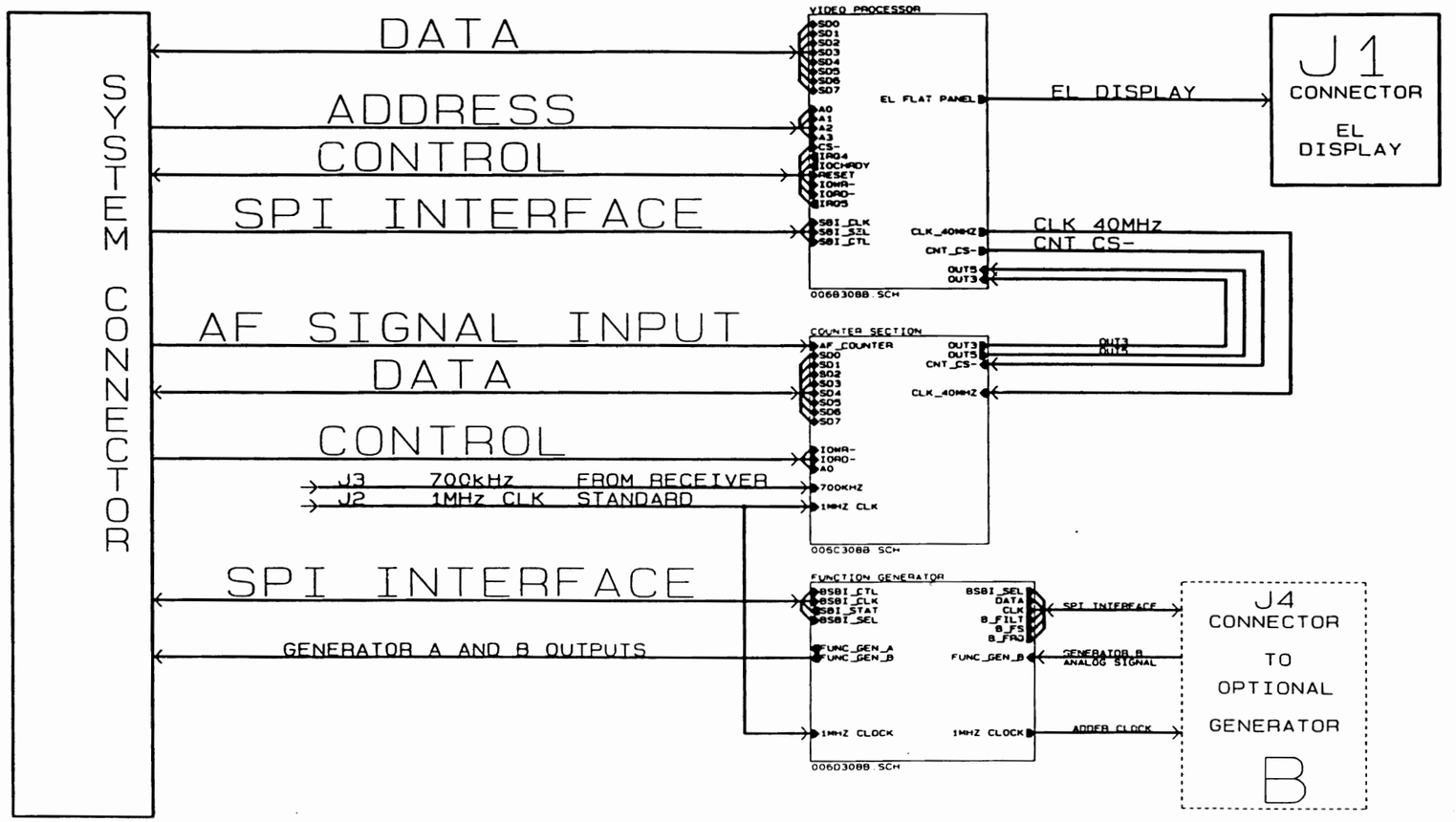

IFR SYSTEMS, INC.
10200 W. YORK STREET
WICHITA, KS 67215-8935

Title: Circuit Schematic, VIDEO CNTR/FCTN GEN

Size: C | Document Number: 0000-0532-300 | REV: A

Date: April 18, 1996 | Sheet 10 of 13

Scans by ArtekMedia © 2008

Scans by ArtekMedia © 2008

VIDEO SECTION BLOCK DIAGRAM

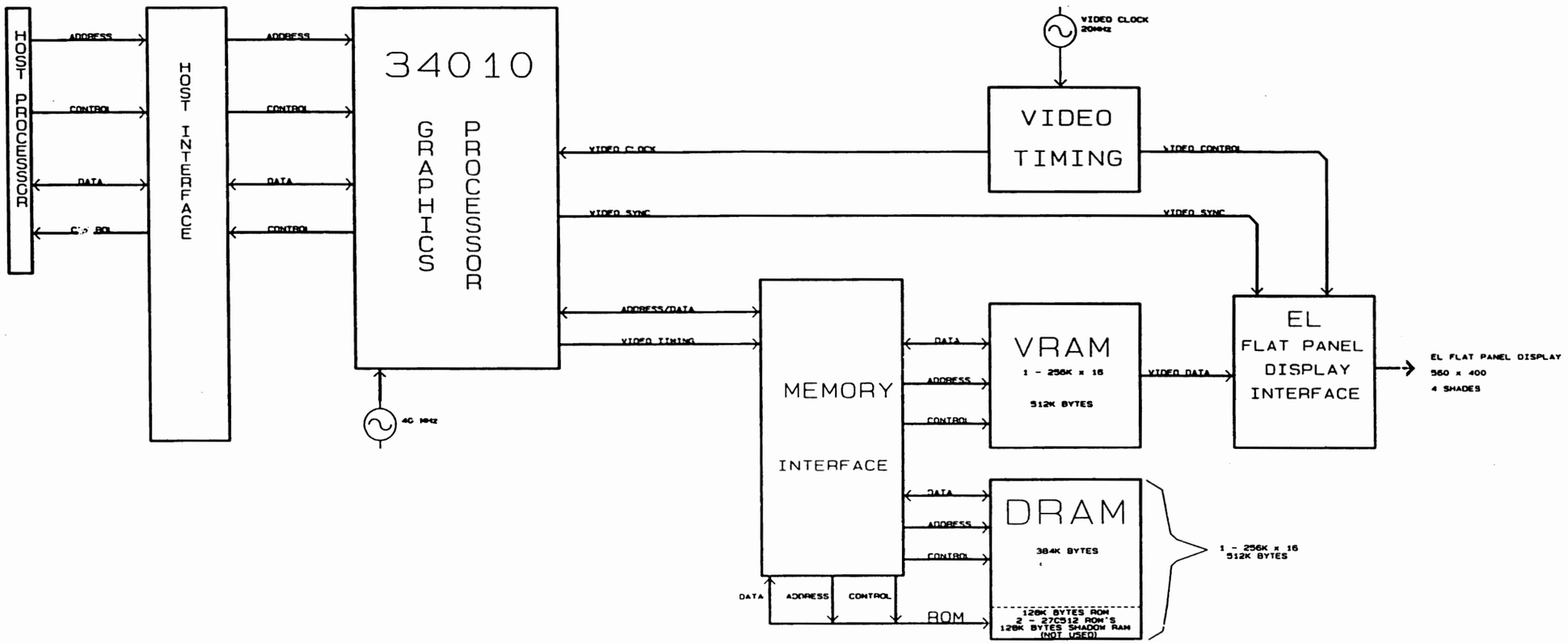

IFA SYSTEMS, INC
10200 W YORK STREET
WICHITA, KS 67215-8935

Title: Circuit Schematic, VIDEO CNTR/FCTN GEN		
Size: C	Document Number: 0000-0632-300	REV: A
Date: April 18, 1996	Sheet: 11 of 13	

COUNTER SECTION
BLOCK DIAGRAM

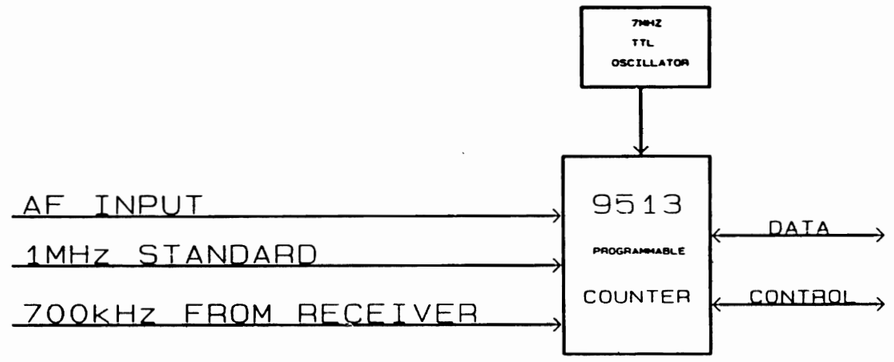

IFR SYSTEMS, INC.
10200 W. YORK STREET
WICHITA, KS 67215-8935

Title: Circuit Schematic, VIDEO CNTR/FCTN GEN

Size: C | Document Number: 0000-0632-300 | REV: A

Date: April 18, 1996 | Sheet 12 of 13

Scans by ArtekMedia © 2008

Scans by ArtekMedia © 2008

FUNCTION GENERATOR BLOCK DIAGRAM

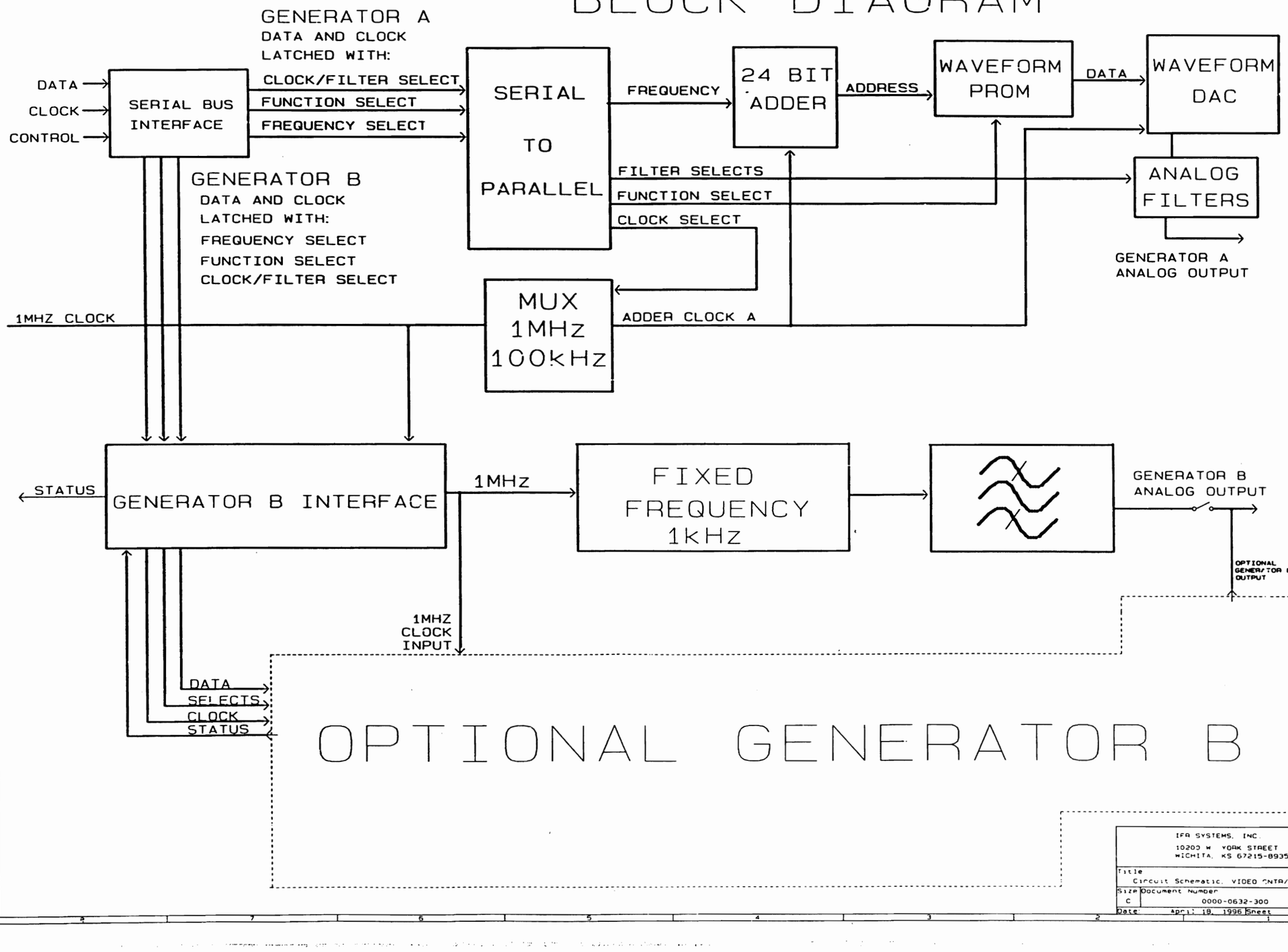

IFR SYSTEMS, INC.	
10200 W YORK STREET WICHITA, KS 67215-8935	
Title: Circuit Schematic, VIDEO CNTR/FCTN GEN	
Size: C	Document Number: 0000-0632-300
Rev: A	
Date: April 18, 1996	Sheet 13 of 13

DATE	REV	CHANGE		APVD
4-17-96	A	RELEASE PER ECN 16881	RLA	DKB
8-14-96	B	DNC ECN # 17096	J.I.M.	DC

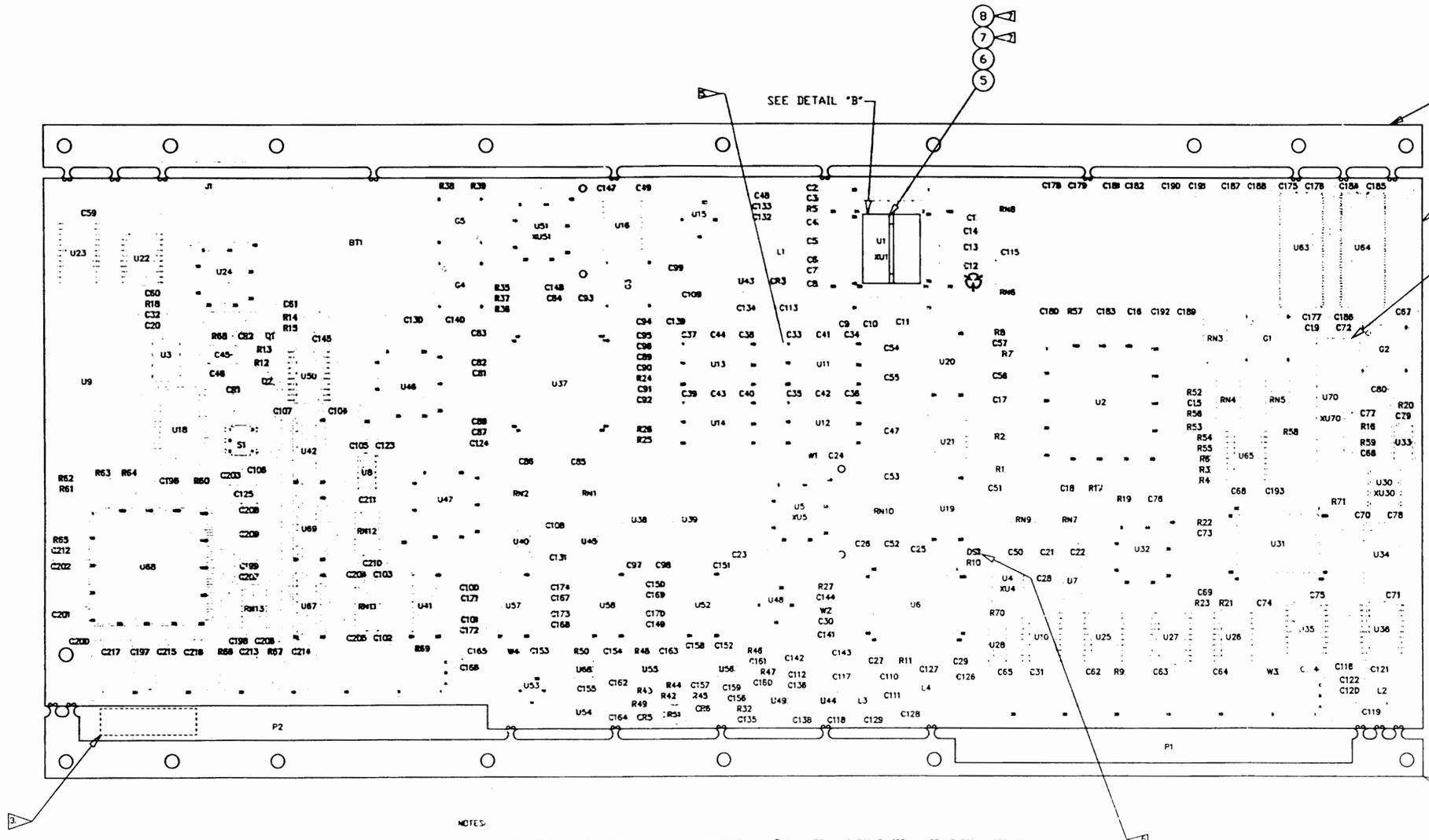

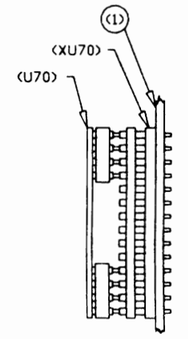

DETAIL "A"

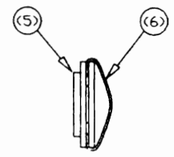

DETAIL "B"

NOTES:

1. BASIC REFERENCE DESIGNATORS SHOWN. FOR COMPLETE DESIGNATOR PREFIXES REFER TO PRODUCT STRUCTURE, AND SYSTEM INTERCONNECT FOR APPLICATIONS WHERE USED.
2. HARDWARE THAT IS NOT PART OF BILL OF MATERIALS SHOULD NOT BE INSTALLED.
3. AFFIX MODULE IDENT LABEL HERE.
4. TO BE REMOVED PRIOR TO MECH ASSEMBLY.
5. PROGRAMMED PART.
6. DS1 DIRECTION IS MARKED WRONG ON PC BOARD.
7. APPLY ADHESIVE (ITEM 1) TO HEATSINK (ITEM 5) AND ACCELERATOR (ITEM 8) TO PROCESSOR (U1). ORIENT FINGERSTOCK (ITEM 6) ON HEATSINK AS SHOWN.

TOP VIEW

CAUTION:
CONTAINS PARTS AND ASSEMBLIES SUSCEPTIBLE TO DAMAGE BY ELECTROSTATIC DISCHARGE (ESD).

IFR SYSTEMS INC
10000 West York St., Wichita, Kansas 67215

DRAWN R. WEEKS	DATE 11-11-93	TITLE: ASSEMBLY DRAWING CONTROLLER
CHECKED D.K.B.	DATE 4-6-95	
APPROVED S.PIERSON	DATE 4-11-95	SIZE D · DWG NO 7010-0632-200 · REV B
100622B0.PLT		SCALE N.T.S. · DO NOT SCALE · FSCM 51190 · SHEET 1 OF 2

Scans by ArtekMedia © 2008

Scans by ArtekMedia © 2008

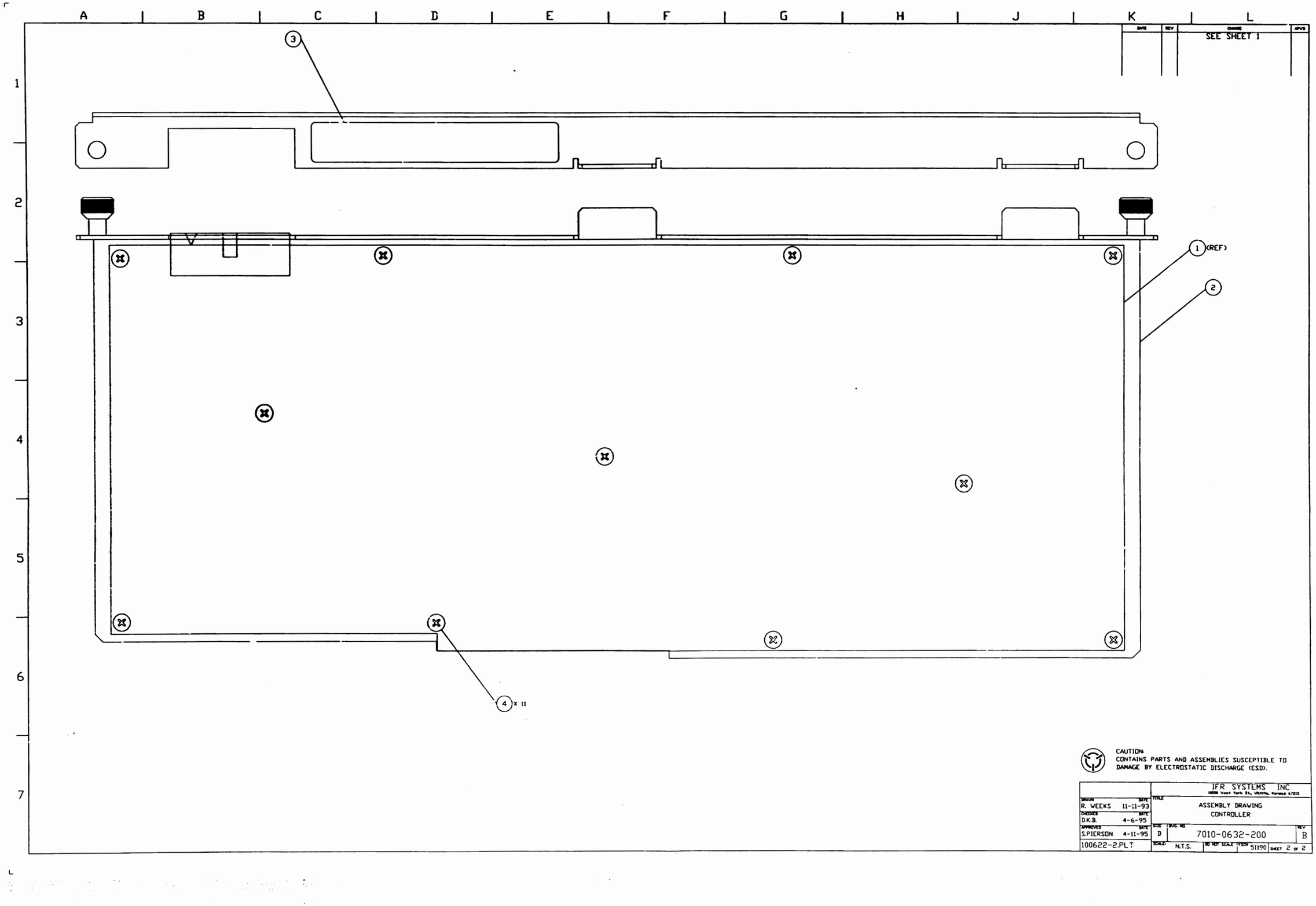

CAUTION:
CONTAINS PARTS AND ASSEMBLIES SUSCEPTIBLE TO DAMAGE BY ELECTROSTATIC DISCHARGE (ESD).

	IFR SYSTEMS INC 10200 West York St, Wichita, Kansas 67215
DRAWN R. WEEKS 11-11-93	TITLE: ASSEMBLY DRAWING CONTROLLER
CHECKED D.K.B. 4-6-95	
APPROVED S.PIERSON 4-11-95	SIZE D · DOC. NO. 7010-0632-200 · REV B
100622-2.PLT	SCALE N.T.S. · DO NOT SCALE · ITEM 51190 · SHEET 2 of 2

DATE	REV	CHANGE	APPROVED
4-18-96	A	Release Per ECN 15881 J.I.M.	DKB

NOTES:
(UNLESS OTHERWISE SPECIFIED)

1. BASIC REFERENCE DESIGNATORS SHOWN, FOR COMPLETE DESIGNATOR PREFIXES REFER TO PRODUCT STRUCTURE AND SYSTEM INTERCONNECT FOR APPLICATIONS WHERE USED.
2. ALL RESISTORS ARE 1%, 1/8W.
3. ALL RESISTANCE IS EXPRESSED IN OHMS.
   ALL CAPACITANCE IS EXPRESSED IN MICROFARADS.
   ALL INDUCTANCE IS EXPRESSED IN MICROHENARIES.
4. HIGHEST REFERENCE DESIGNATIONS:
   U70 C217 CR6 R71 P2 J2 G5 DS1 RN13 S1 BT1 Q2 L4 W4 TP52
5. REFERENCE DESIGNATIONS NOT USED: U17 U29 C58 C146 C194 C195 C137 R28 R29 R30 R31 R33 R34 R40 R41 CR4
6. FOR INTERCONNECT/BLOCK DIAGRAM SEE APPLICATIONS WHERE USED.
7. COMPONENT NOT INSTALLED
   J2 U59 U60 U61 U62 TP1-TP52

CAUTION:

CONTAINS PARTS AND ASSEMBLIES SUSCEPTIBLE TO DAMAGE BY ELECTROSTATIC DISCHARGE (ESD).

8. IC FUNCTIONS NOT USED:

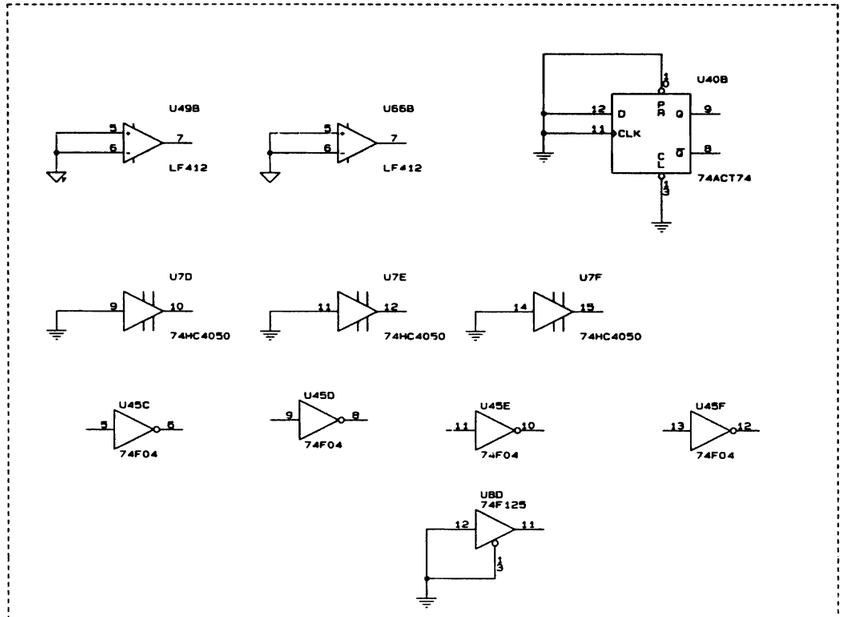

Drawn	Date	IRA SYSTEMS, INC.	
Kyehung Lee	4/12/95	DESIGNED BY KYEHUNG LEE	
Checked	Date	Title	
DKB	4/7/95	CIRCUIT SCHEMATIC, CONTROLLER	
Approved	Date	Size: C	Document Number: 0000-0632-200
Stan Pierson	4/7/95	Date: April 18, 1996	Sheet: 1 of 1

Scans by ArtekMedia © 2008

Scans by ArtekMedia © 2008

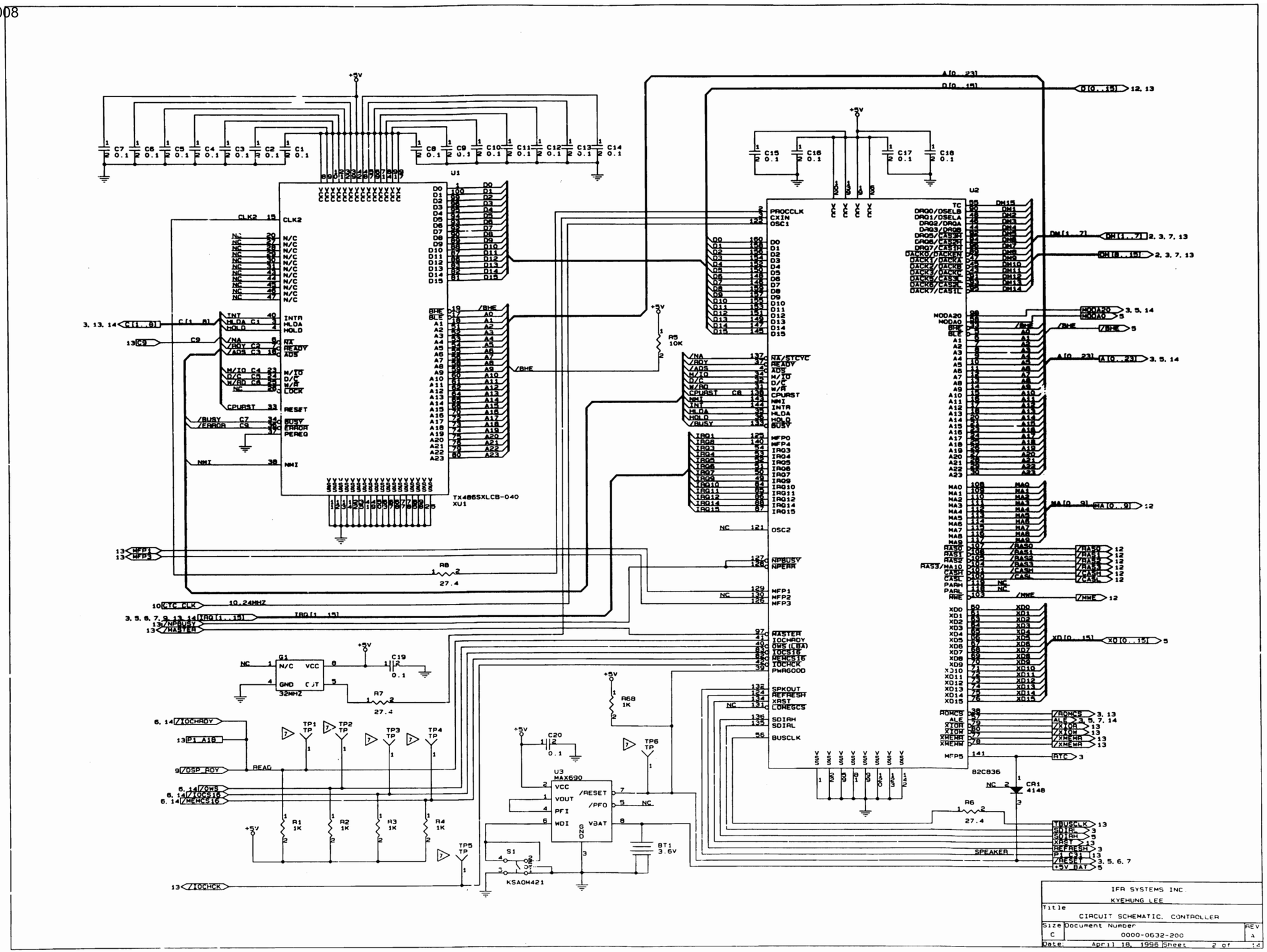

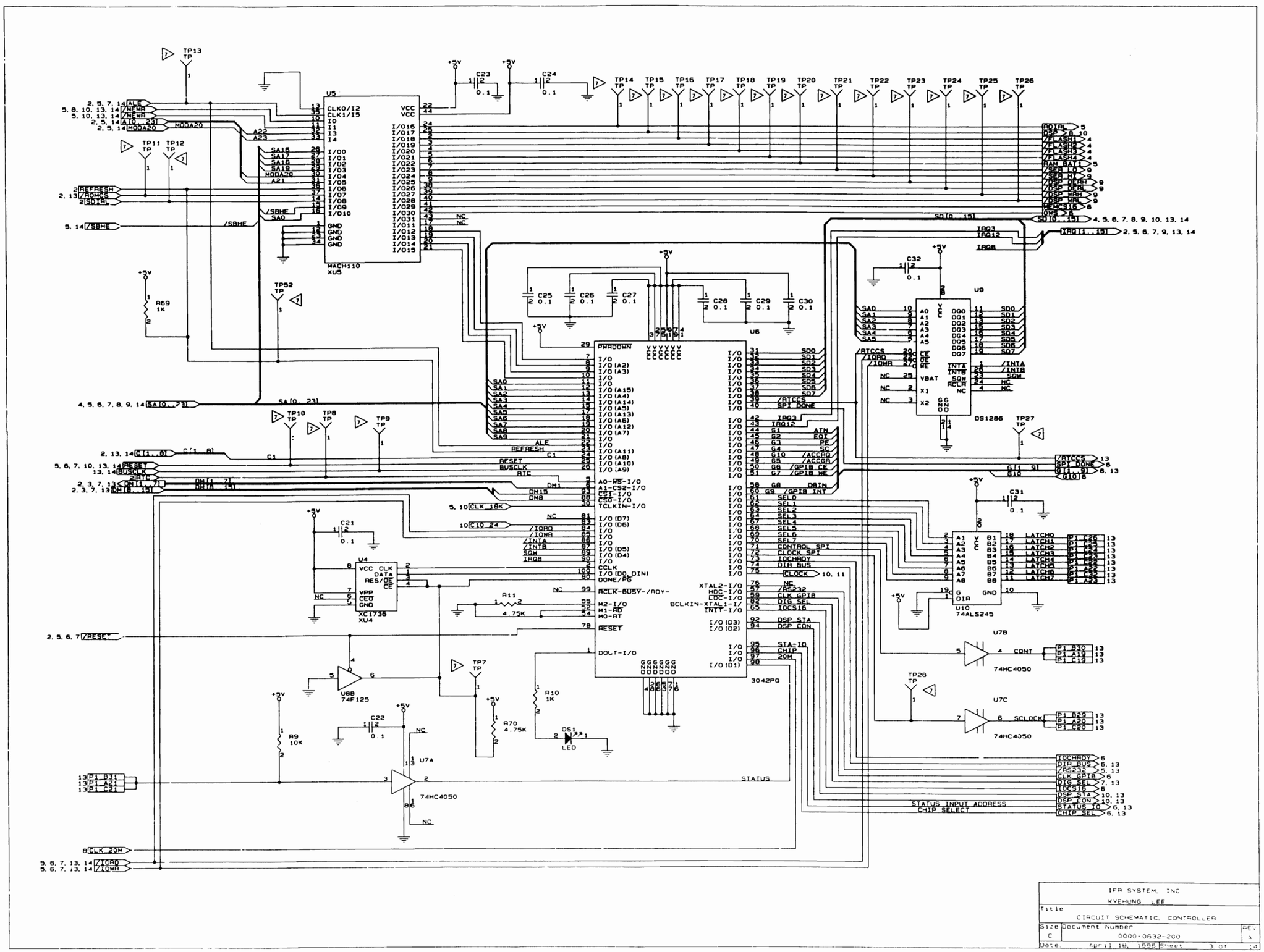

IFR SYSTEM, INC

KYEHUNG LEE

Title

CIRCUIT SCHEMATIC, CONTROLLER

Size	Document Number	REV
C	0000-0632-200	A

Date: April 18, 1995 Sheet 3 of

Scans by ArtekMedia © 2008

Scans by ArtekMedia © 2008

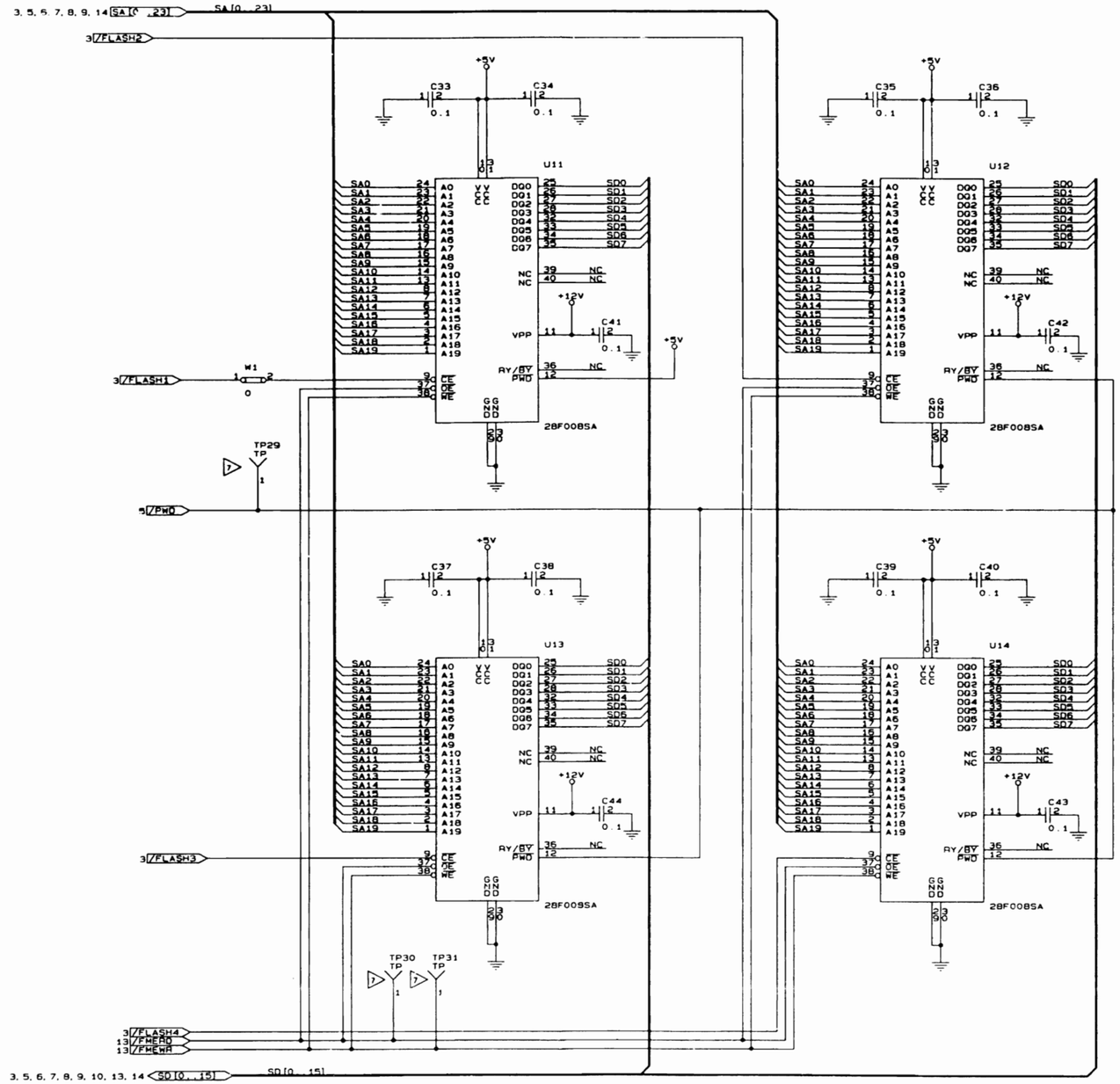

IFA SYSTEMS INC		
KYEHUNG LEE		
Title: CIRCUIT SCHEMATIC, CONTROLLER		
Size: C	Document Number: 0000-0632-200	REV: A
Date: April 10, 1996	Sheet 4 of 14	

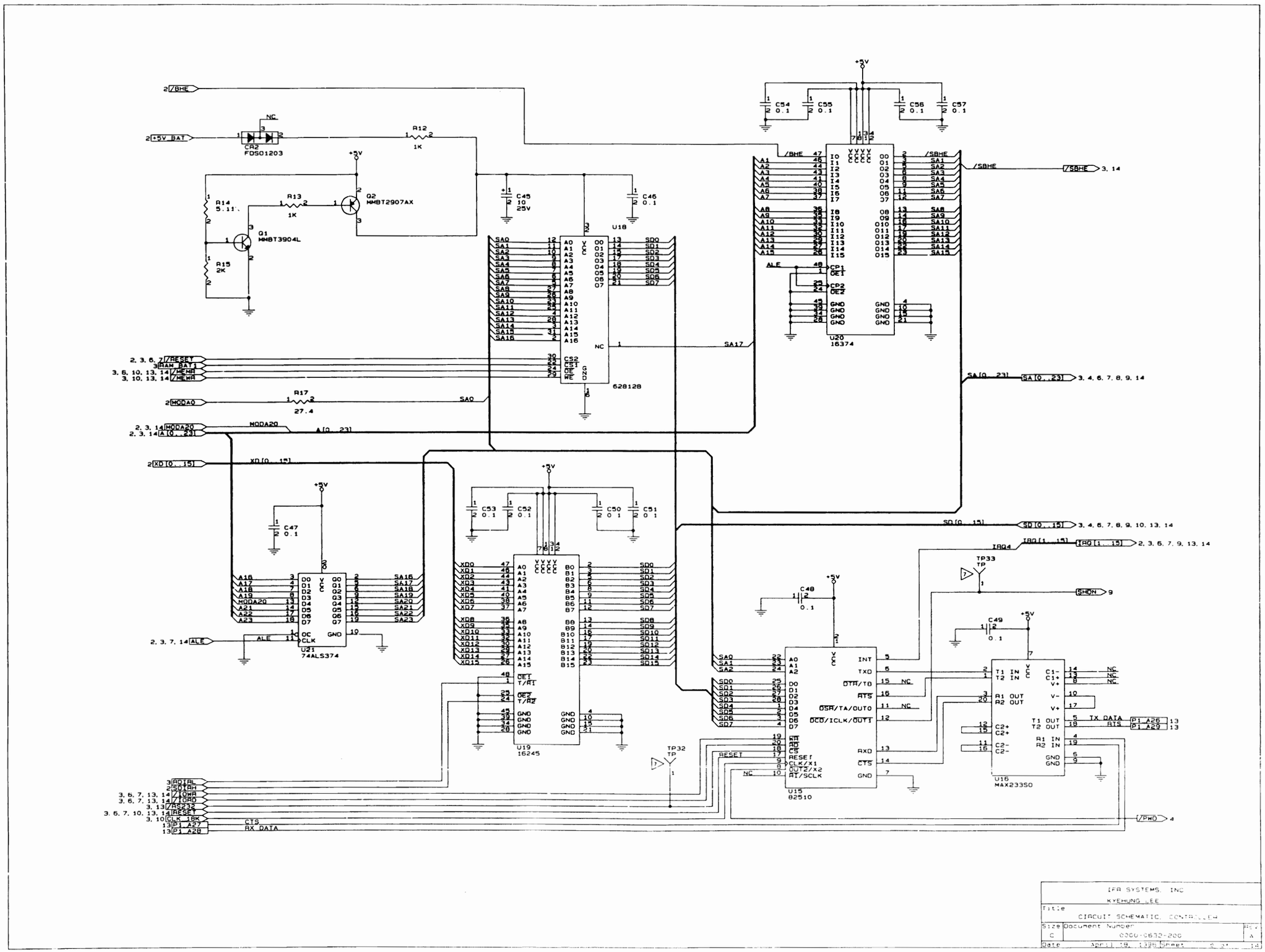

Scans by ArtekMedia © 2008

Scans by ArtekMedia © 2008

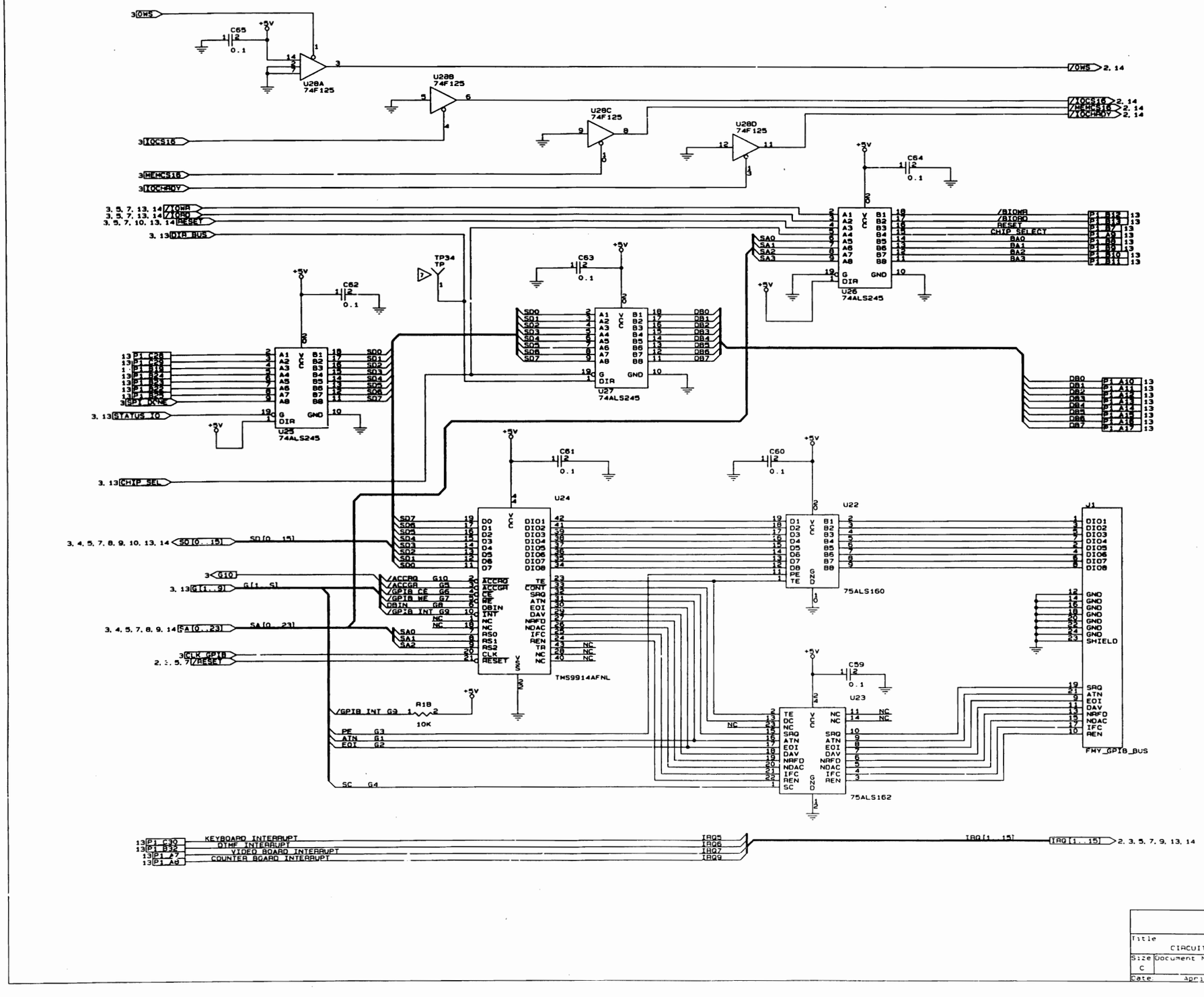

IFR SYSTEMS INC		
KYEHUNG LEE		
Title: CIRCUIT SCHEMATIC, CONTROLLER		
Size: C	Document Number: 0000-0632-200	REV: A
Date: April 19, 1990	Sheet: 6 of 14	

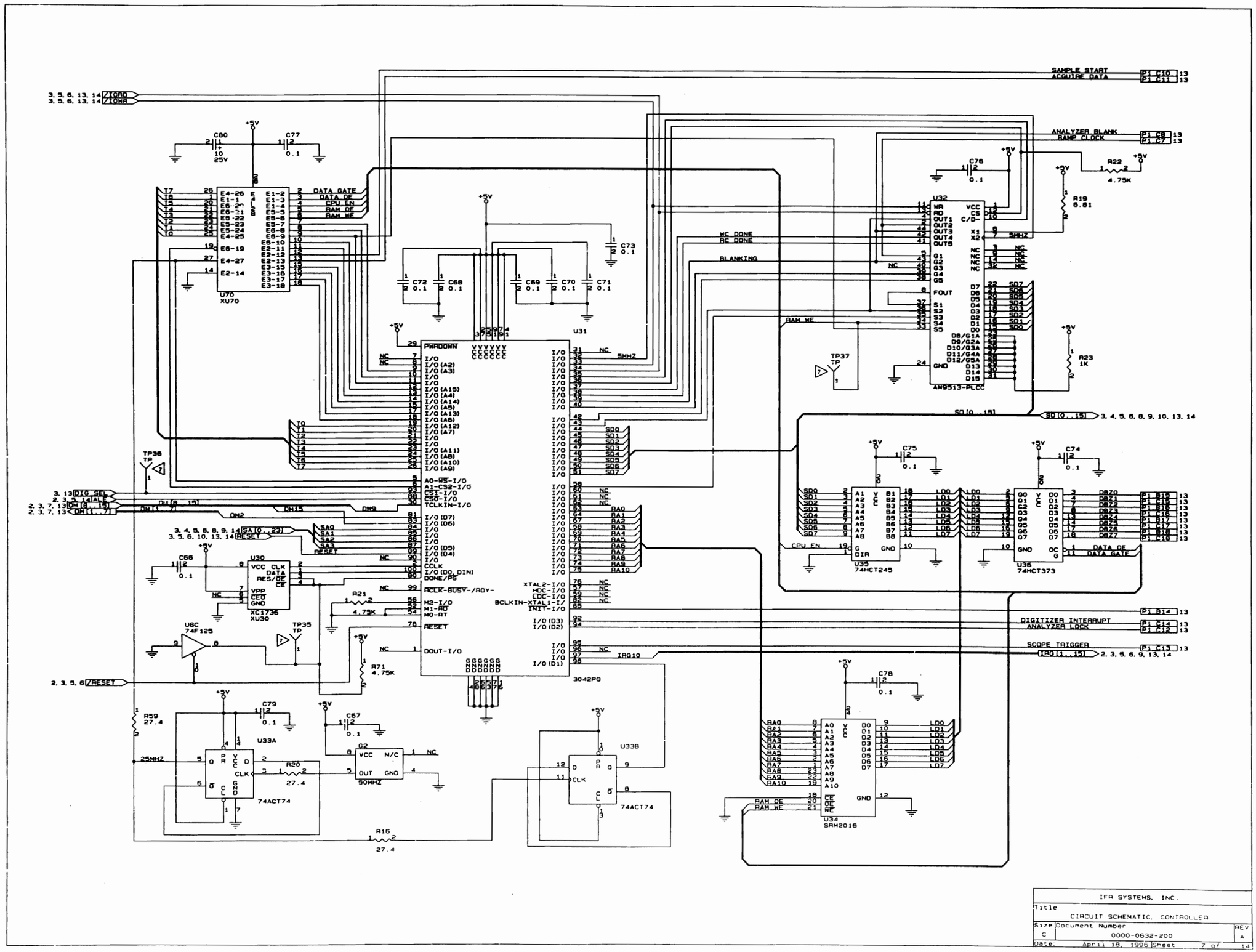

Scans by ArtekMedia © 2008

Scans by ArtekMedia © 2008

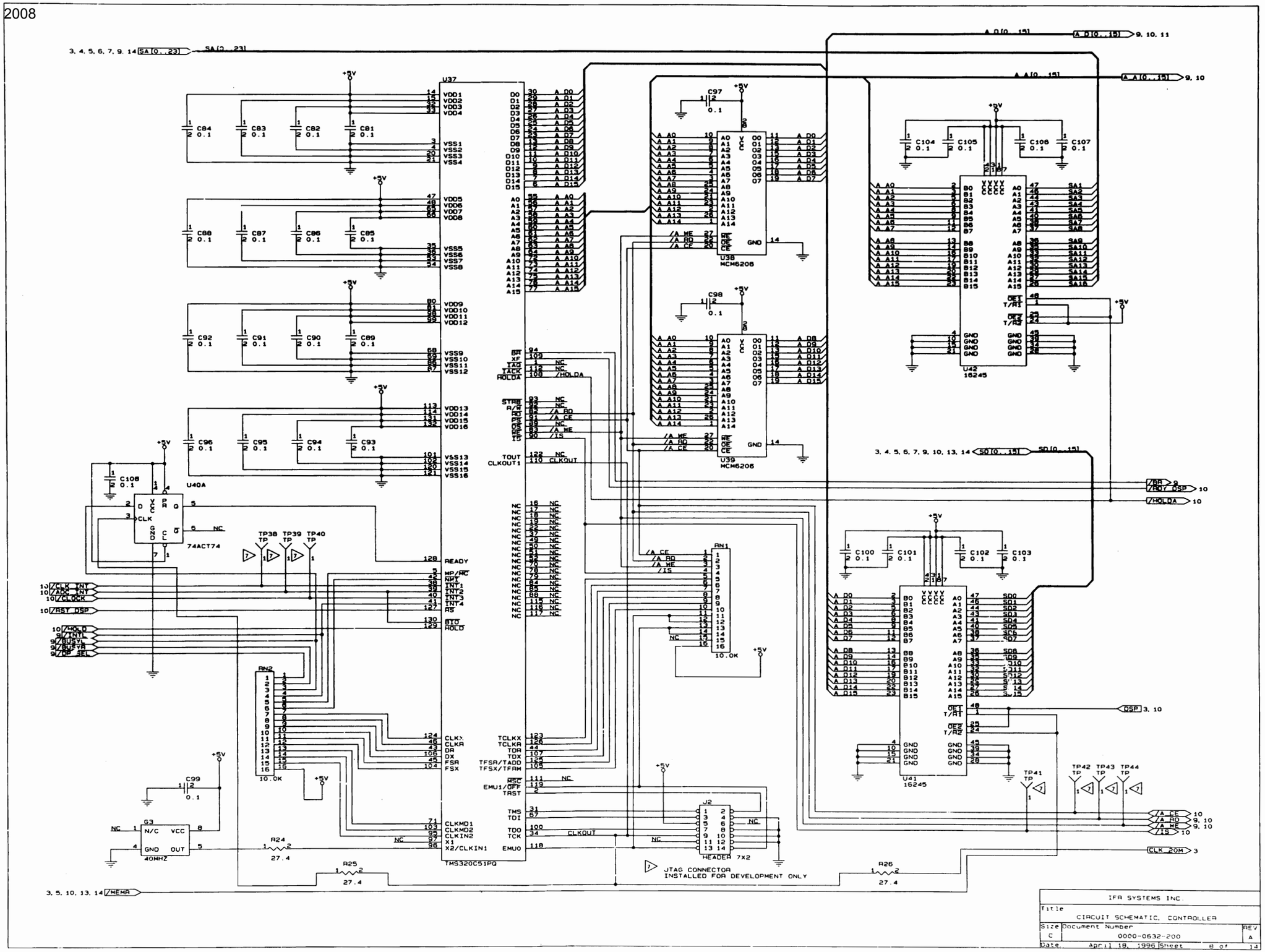

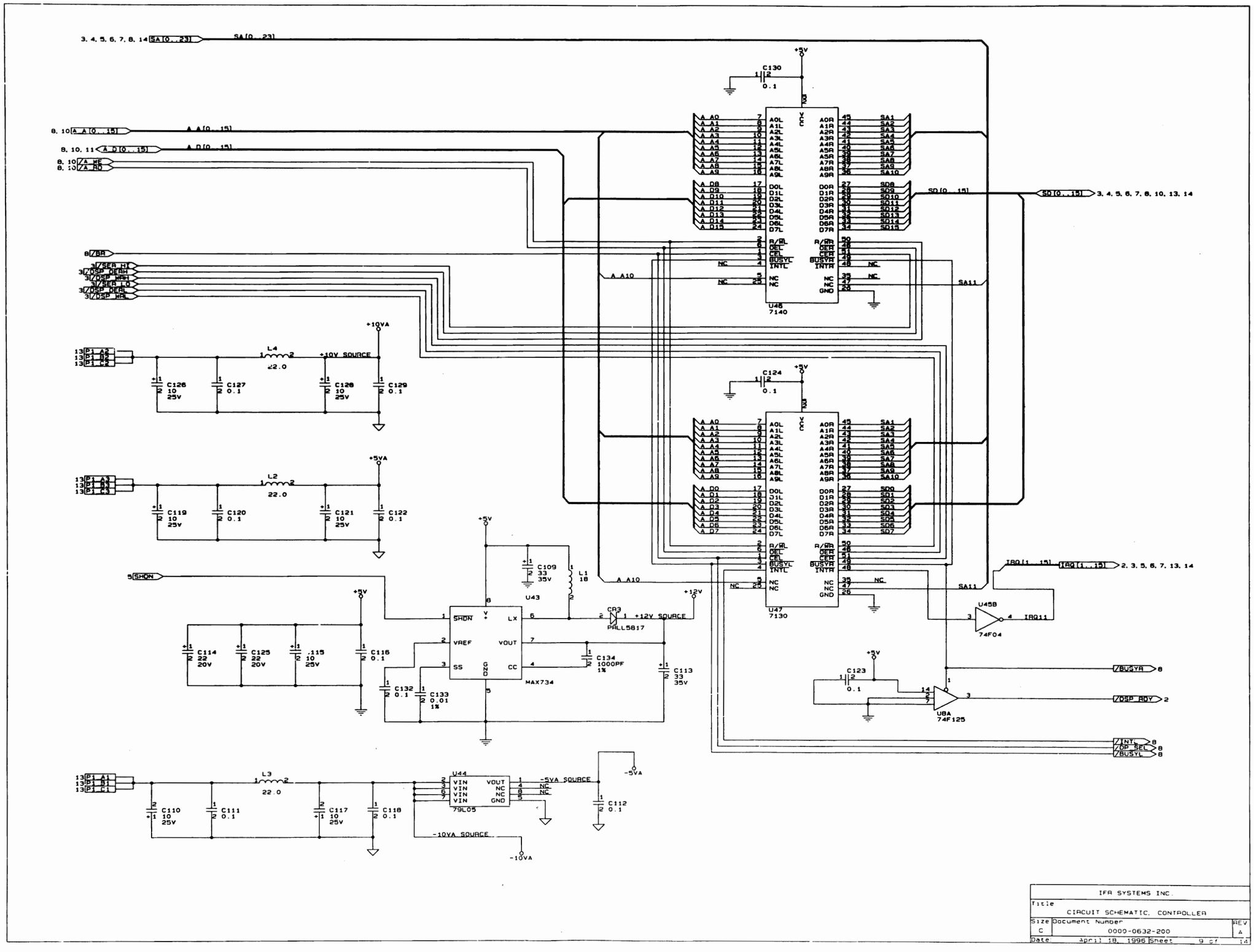

IFA SYSTEMS INC.

Title: CIRCUIT SCHEMATIC, CONTROLLER

Size	Document Number	REV
C	0000-0632-200	A

Date: April 18, 1996 Sheet 9 of 14

Scans by ArtekMedia © 2008

Scans by ArtekMedia © 2008

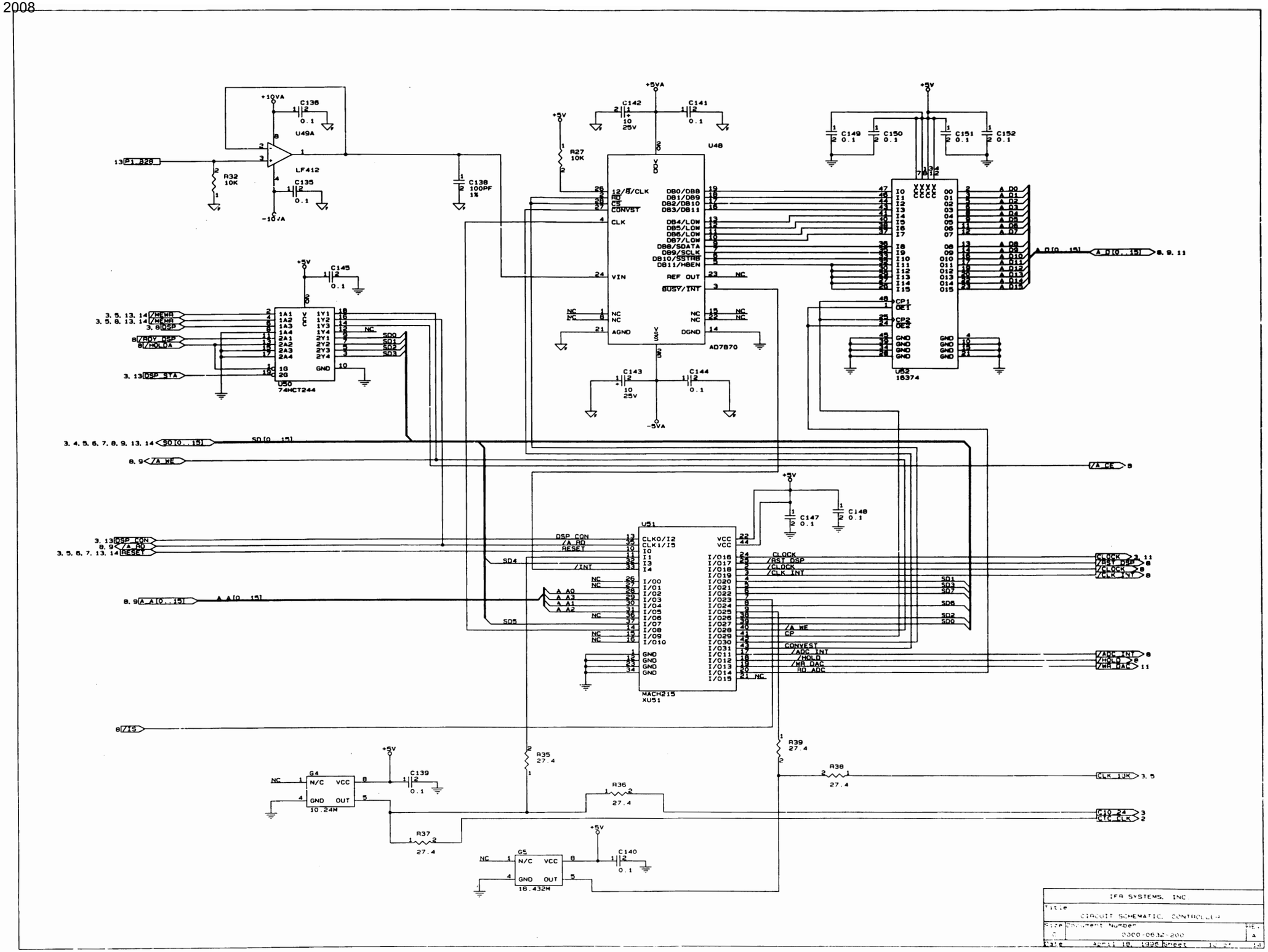

IFA SYSTEMS, INC		
Title: CIRCUIT SCHEMATIC, CONTROLLER		
Size: C	Document Number: 0000-0632-200	Rev: A
Date: April 18, 1995	Sheet	of

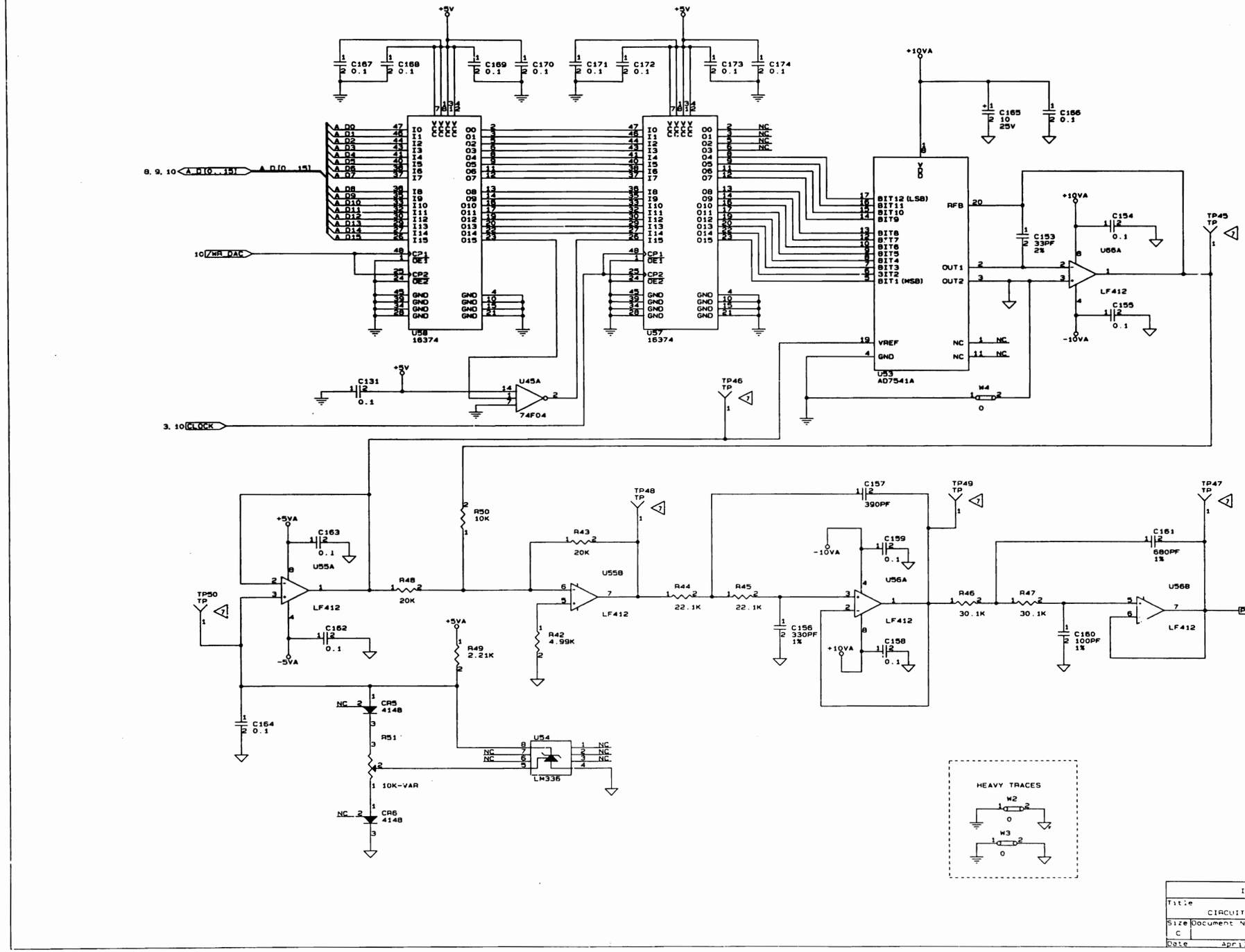

Scans by ArtekMedia © 2008

Scans by ArtekMedia © 2008

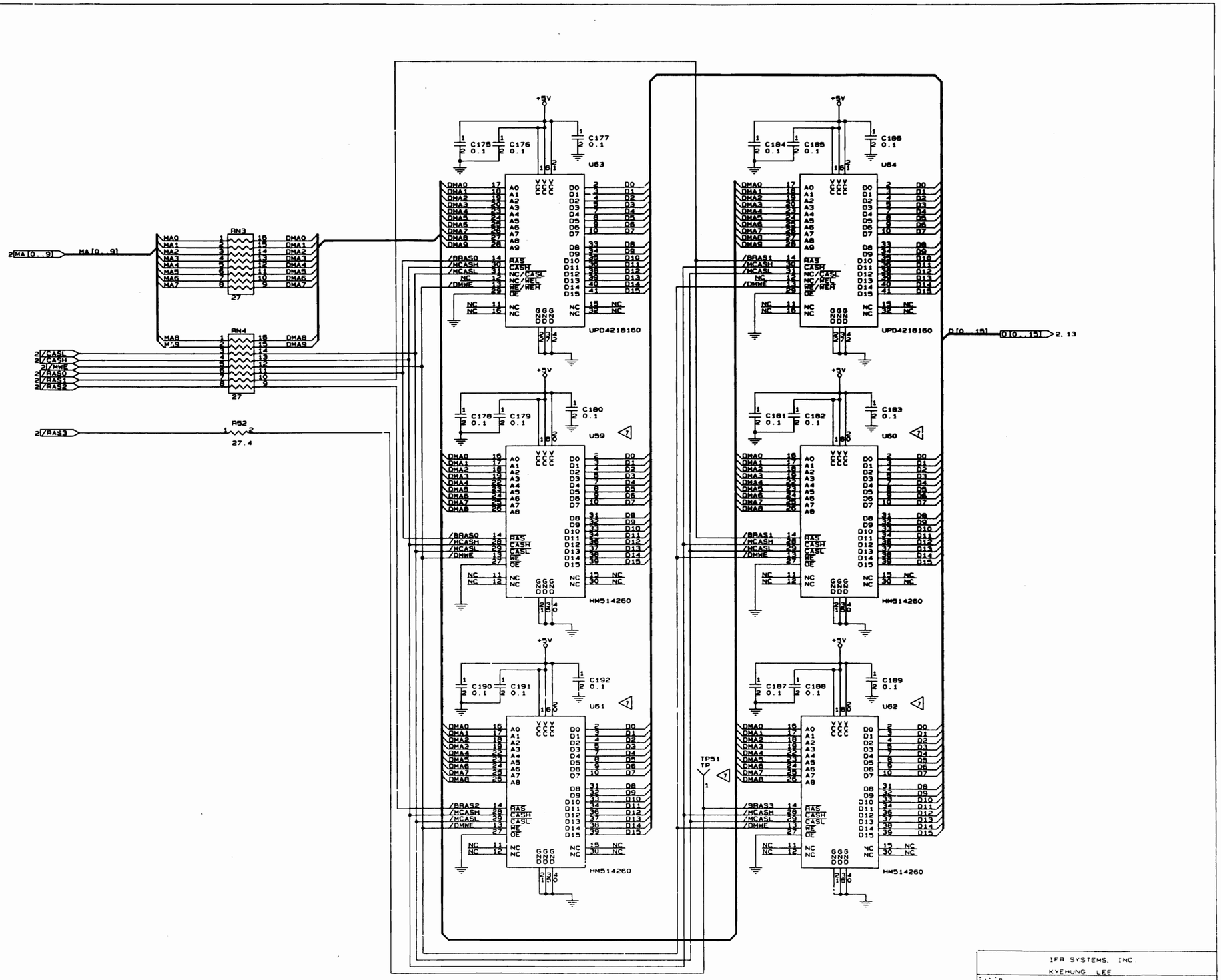

IFA SYSTEMS, INC		
KYEHUNG LEE		
Title: CIRCUIT SCHEMATIC, CONTROLLER		
Size: C	Document Number: 0000-0632-200	REV: A
Date: April 15, 1996	Sheet 12 of 14	

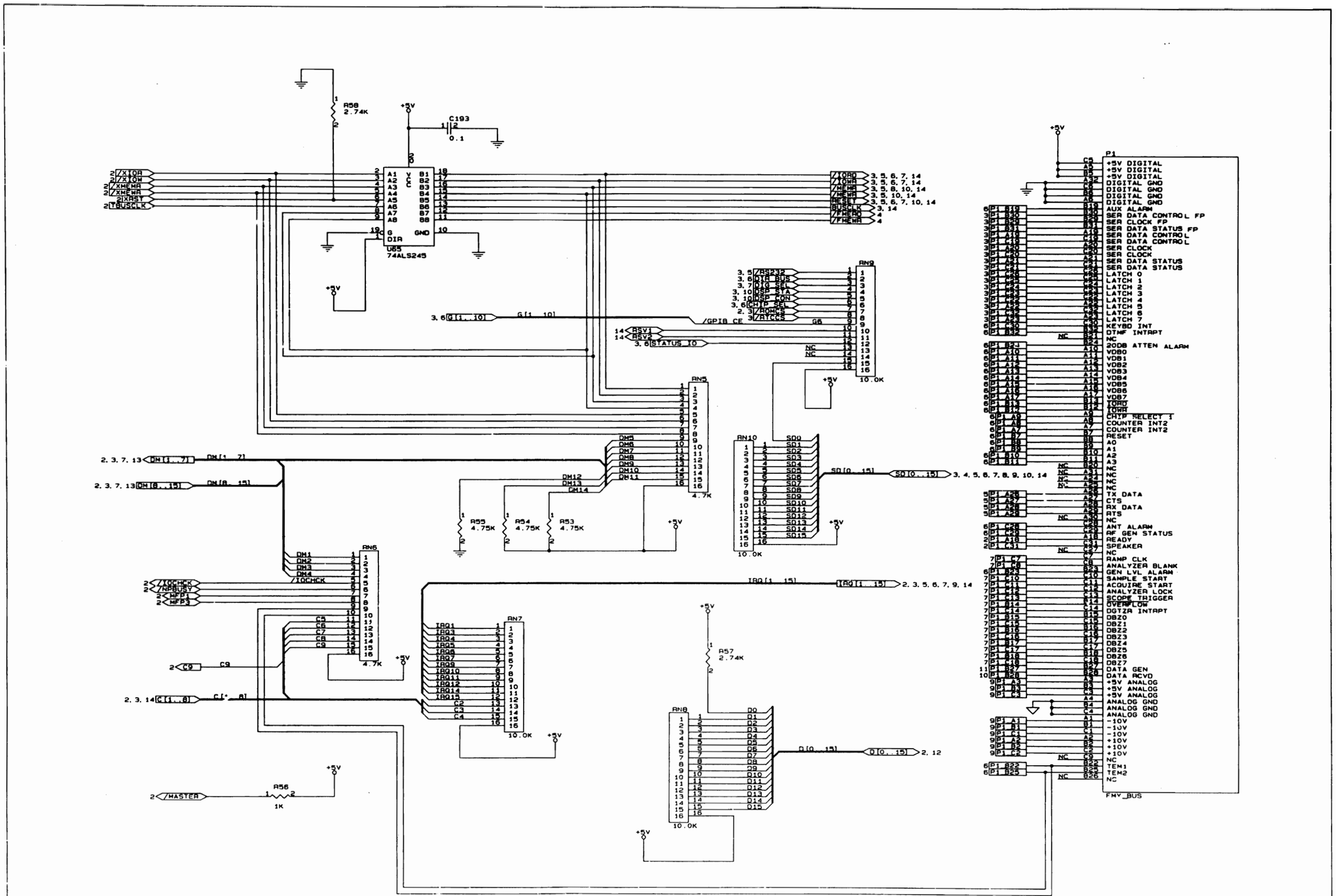

Scans by ArtekMedia © 2008

Scans by ArtekMedia © 2008

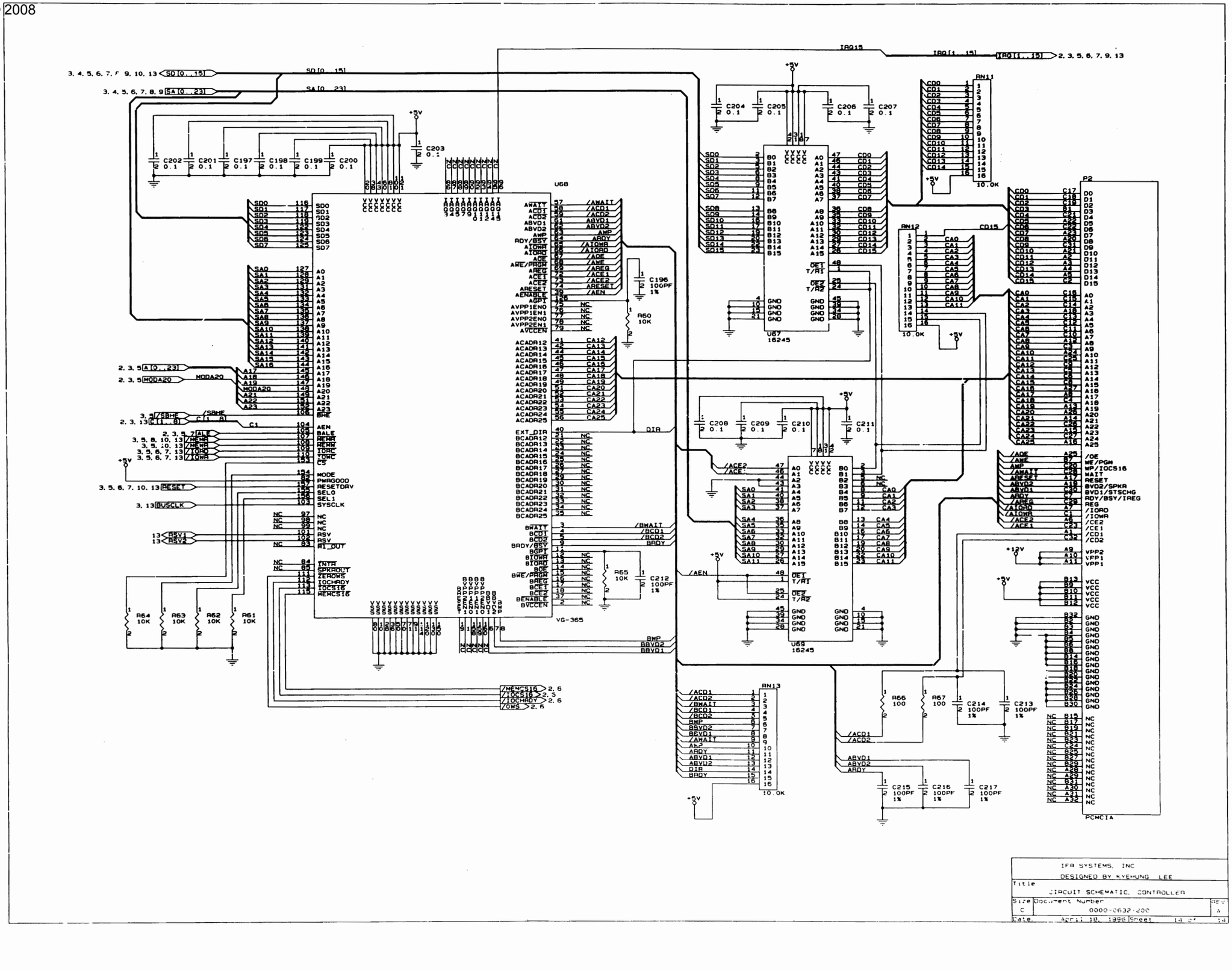

DATE	REV	DESCRIPTION	APD
8/17/92	E	DESIGN RELEASE RH	DKB
4/6/93	E1	PROD REL ECN 15564 RH	DKB
8/8/95	F	INC ECN 15676 BP	BM
02/01/96	G	INC ECN #16881 RH	DKB

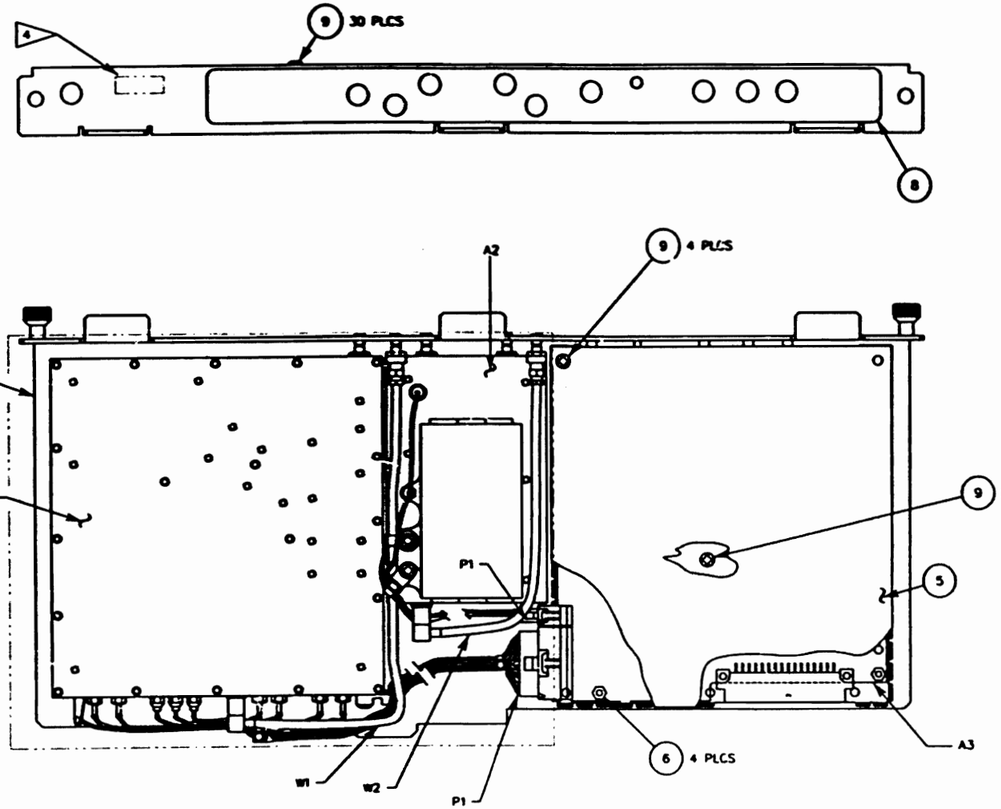

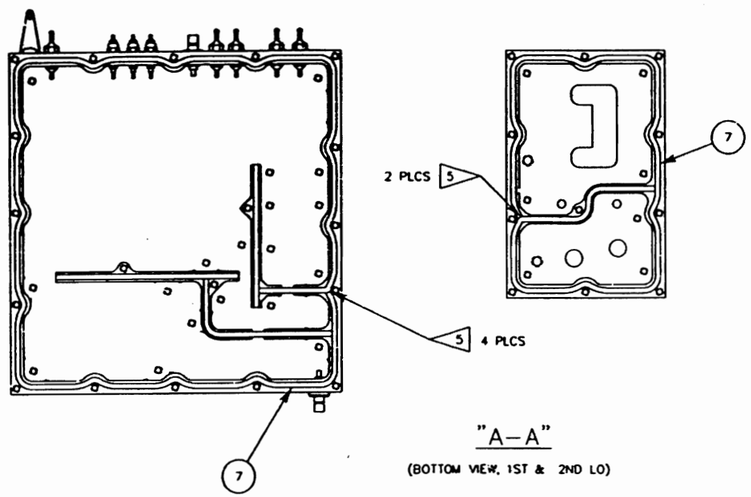

"A–A"

(BOTTOM VIEW, 1ST & 2ND LO)

NOTES:

1. BASIC REFERENCE DESIGNATORS SHOWN, FOR COMPLETE DESIGNATOR PREFIXES REFER TO PRODUCT STRUCTURE, AND SYSTEM INTERCONNECT FOR APPLICATIONS WHERE USED.
2. REF. INTERCONNECT #0000-8740-700.
3. MECH. ASSY DRAWING SHOWS ONLY PORTIONS OF PC BD ASSY'S REQUIRED FOR REF ONLY.

4 AFFIX MODULE IDENTIFICATION LABEL HERE.

5 CUT ENDS OF GASKET MUST MEET UNDER COMPRESSION WHEN INSTALLED.

"THIS DOCUMENT CONTAINS PROPRIETARY INFORMATION OF IFR, INC. AND IS NOT TO BE DISCLOSED, REPRODUCED, OR PUBLISHED WITHOUT IFR'S APPROVAL."

IFR SYSTEMS INC

DRAWN HARRIS 7/17/92	TITLE	MECH ASSY, SYNTHESIZER TRAY
CHECKED D BROOKSCHMIDT 8/14/92		
APPROVED M. BACHMAN 8/14/92	SIZE D	DWG NO 7005-8740-700 REV G
0874070D.DWG	PLOT SCALE 1=1	SCALE 1=1 CAGE 51190 SHEET 1 OF 1

Scans by ArtekMedia © 2008

Scans by ArtekMedia © 2008

DATE	REV	CHANGE		E.I.I.R.
4-16-93	E1	1st GENERATION		J.I.M.
DATE	REV	CHANGE		APPROVED
5-12-93	E1	PROD. REL. PER ECN #15564	J.I.M.	DKB
08-24-93	E2	INC ECN #15769	BP	BM
8/8/95	F	INC ECN #15676	BP	BM
02/01/96	G	INC ECN #16881	RH	DKB

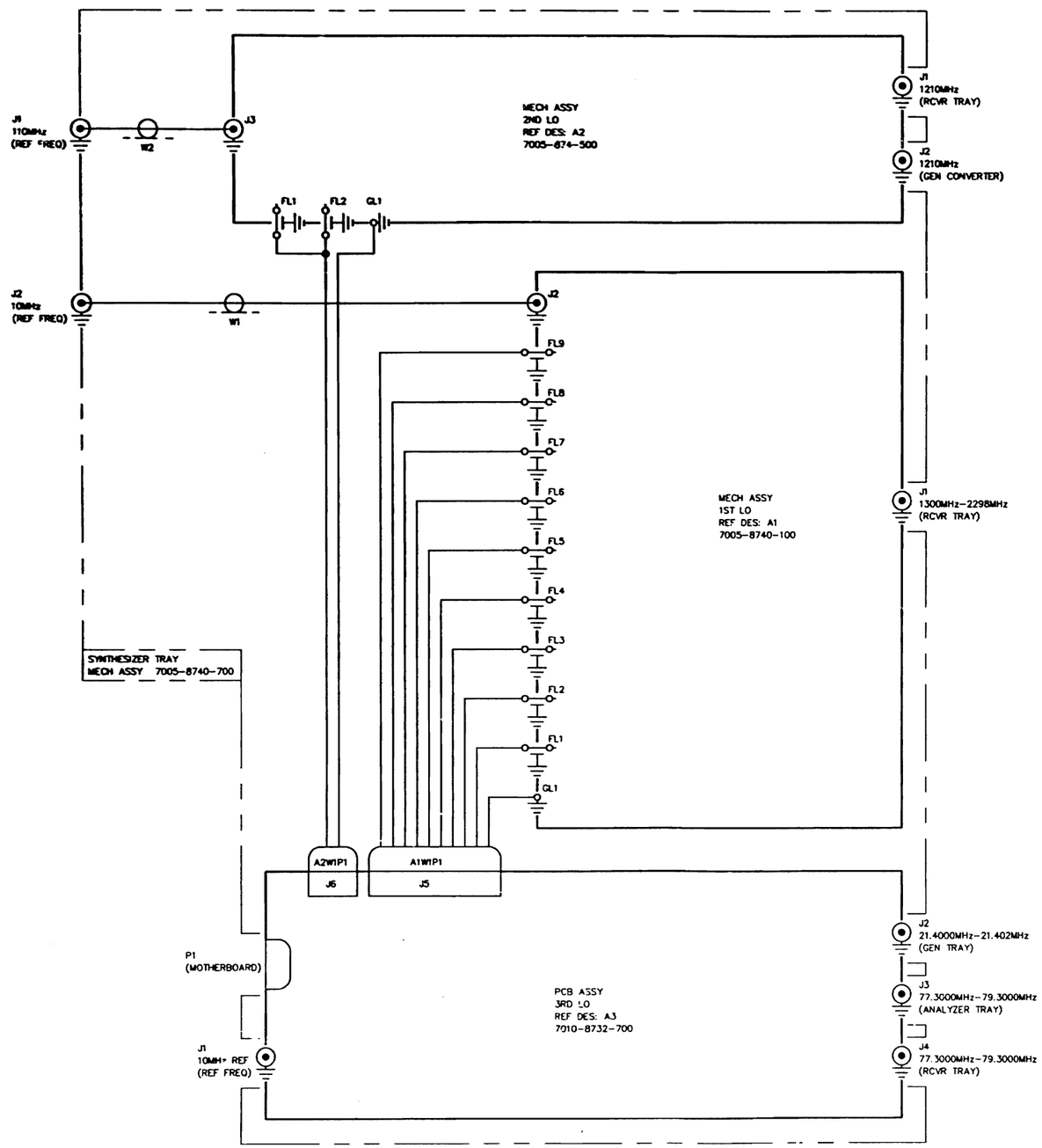

DRAWN J. MILLER 4-16-93	IFR SYSTEMS INC, 10200 West York St., Wichita, Kansas 67215
CHECKED M.BACHMAN 4-22-93	TITLE: INTERCONNECT SYNTHESIZER TRAY
APPROVED T.THANH 5-12-93	SIZE D; DWG. NO. 0000-8740-700; REV G
087B407G.DWG	SCALE: DO NOT SCALE; FSCM 51190; SHEET 1 OF 1

DATE	REV	CHANGE		APVD
9/22/92	F	DESIGN RELEASE	RH	DKB
10/26/92	F1	INC FMY-047	RH	DKB
12/14/92	F2	INC FMY-084	RH	DKB
1/28/93	G	INC FMY-073	RH	DKB
04/13/93	G1	PROD. REL. PER ECN 15564	BP	DKB
08/23/93	G2	INC ECN 15769	BP	BM
04/04/95	H	INC ECN 16477	RH	BM

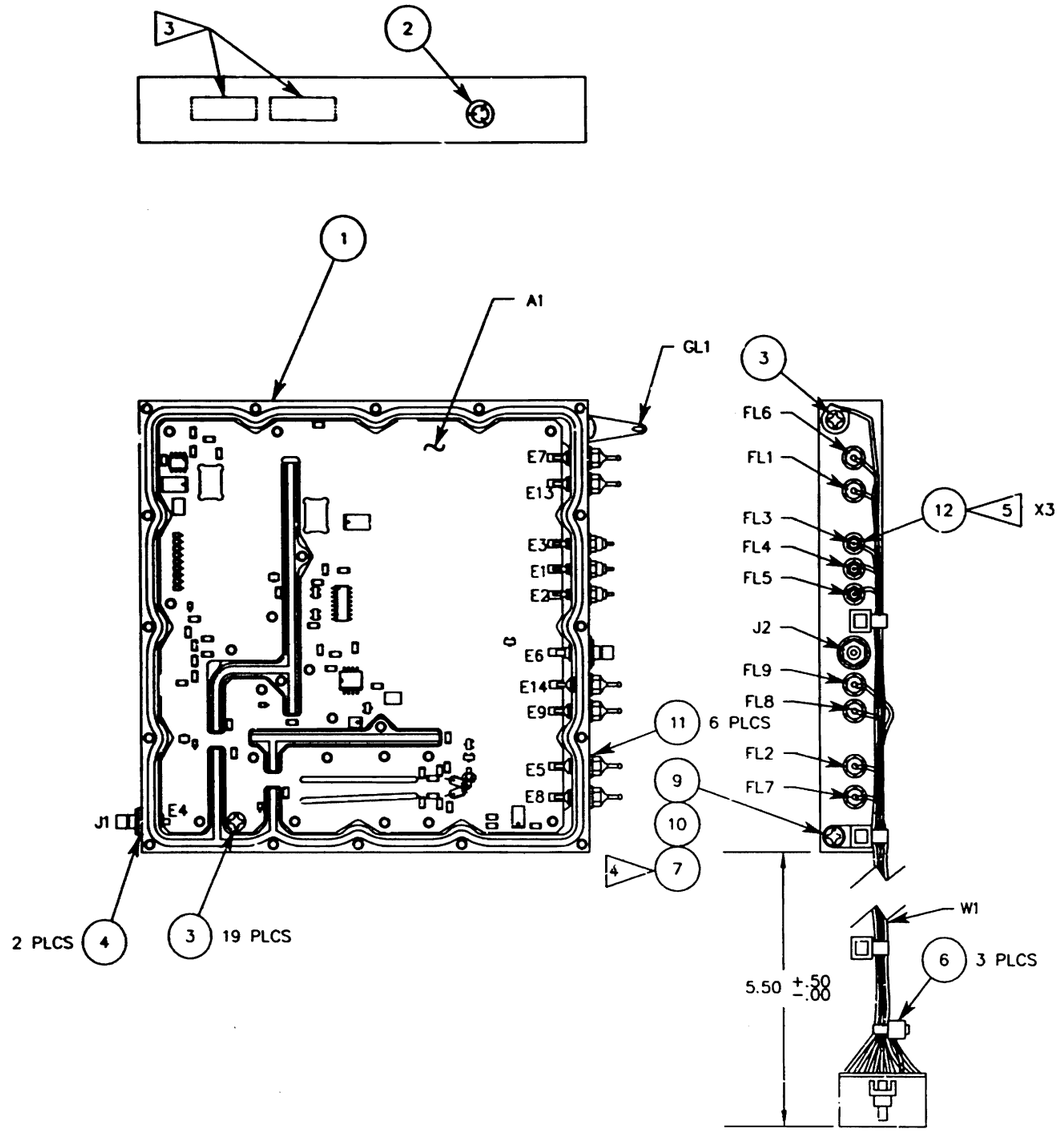

NOTES:

1. BASIC REFERENCE DESIGNATORS SHOWN, FOR COMPLETE DESIGNATOR PREFIXES REFER TO PRODUCT STRUCTURE, AND SYSTEM INTERCONNECT FOR APPLICATIONS WHERE USED.
2. MECH. ASS'Y DRAWING SHOWS ONLY PORTIONS OF PC BD ASSY'S REQUIRED FOR REF. ONLY.

3 AFFIX MODULE IDENTIFICATION LABELS HERE.

4 ADD WASHER ITEM #7 BETWEEN TYRAP AND BLOCK ITEM #10.

5 ADD WASHER (12) BETWEEN FL3,FL4, FL5 AND BLOCK (11). TORQUE @ 32 IN/OZ.

WIRE RUNNING LIST				
DESG	FROM	TO	COLOR	AWG
W1W1	P1-01	FL6	RED	26
W1W2	P1-02	FL7	YELLOW	26
W1W3	P1-03	FL8	VIOLET	26
W1W4	P1-04	FL1	BLUE	26
W1W5	P1-05	FL4	VIO/WHT	26
W1W6	P1-06	FL5	BRN/WHT	26
W1W7	P1-07	FL3	RED/WHT	26
W1W8	P1-08	FL2	GRN/WHT	26
W1W9	P1-09	FL9	ORN	26
W1W10	P1-10	GL1	BLK	26

"THIS DOCUMENT CONTAINS PROPRIETARY INFORMATION OF IFR, INC. AND IS NOT TO BE DISCLOSED, REPRODUCED, OR PUBLISHED WITHOUT IFR'S APPROVAL."

IFR SYSTEMS INC
10200 West York St., Wichita, Kansas 67215

DRAWN DATE	HARRIS 5/18/92
CHECKED DATE	S.PERKINS 8/18/92
APPROVED DATE	M.BACHMAN 9/22/92
	087401H0.DWG

TITLE: MECH ASSY, 1ST LO

SIZE C | DWG. NO. 7005-8740-100 | REV H

PLOT SCALE: 1=1 | SCALE 1=1 | CAGE 51190 | SHEET 1 OF 1

Scans by ArtekMedia © 2008

Scans by ArtekMedia © 2008

DATE	REV	CHANGE	APVD
8/17/92	F	DESIGN RELEASE RH	DKB
10/26/92	F1	INC FMY-048 RH	DKB
1/4/93	F2	INC FMY-095 RH	DKB
04/07/93	F3	PROD REL PER ECN 15564 BP	DKB
08/23/93	F4	PRODUCT EQUAL TO F5	
11/17/93	F5	INC ECN 15769 & 15769A BP	BM

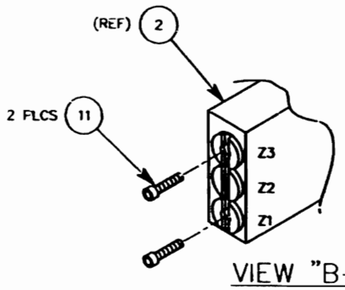

VIEW "B-B"

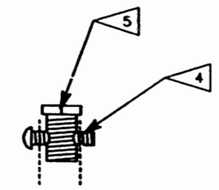

DETAIL "A"

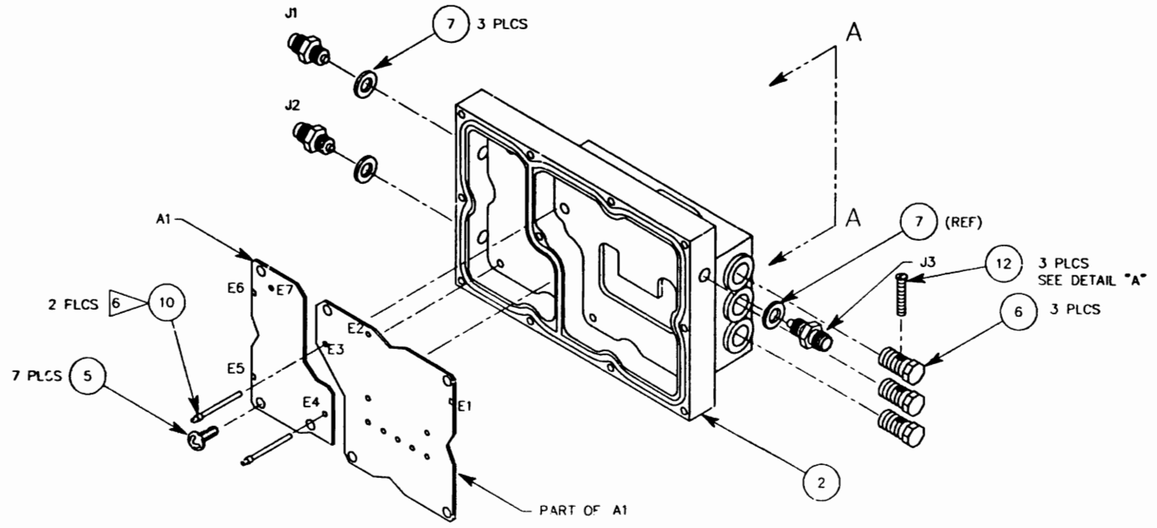

VIEW A-A

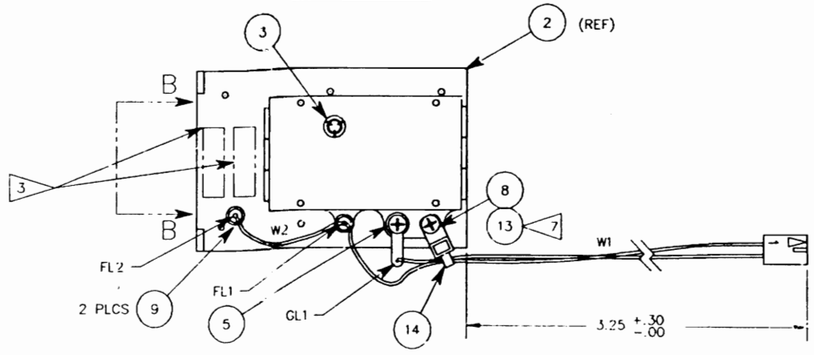

NOTES:

1. BASIC REFERENCE DESIGNATORS SHOWN, FOR COMPLETE DESIGNATOR PREFIXES REFER TO PRODUCT STRUCTURE, AND SYSTEM INTERCONNECT FOR APPLICATIONS WHERE USED.
2. MECH. ASS'Y DRAWING SHOWS ONLY PORTIONS OF PC BD ASSY'S REQUIRED FOR REF. ONLY.
3. AFFIX MODULE IDENTIFICATION LABELS HERE.
4. THREAD NYLON SCREW INTO SLUG UNTIL THREADS ARE EXTENDING PAST SLUG ABOUT EQUAL DISTANCE, CUT OFF BOTH ENDS OF SCREW FLUSH TO SLUG THREADS.
5. SCREW ITEM 6 INTO BLOCK HALF THE LENGTH OF THREADED AREA ONLY.
6. PINS ARE TO BE FULLY INSERTED INTO TUNING POLE. CUT OFF EXCESS PIN.
7. ADD WASHER ITEM #13 BETWEEN ITEM #8 AND ITEM #14

WIRE RUNNING LIST				
DESG	FROM	TO	COLOR	AWG
W1W1	P1-01	FL1	RED	26
W1W2	P1-02	GL1	BLACK	26
W2	FL1	FL2	RED	26

CAUTION:
CONTAINS PARTS AND ASSEMBLIES SUSCEPTIBLE TO DAMAGE BY ELECTROSTATIC DISCHARGE (ESD).

	IFR SYSTEMS INC 10200 West York St, Wichita, Kansas 67215	
DRAWN DATE HARRIS 4/20/92	TITLE MECH ASSY, 2ND LO	
CHECKED DATE D.BROKSCHMIDT 8/17/92		
APPROVED DATE M.BACHMAN 8/17/92	SIZE D	DWG. NO. 7005-8740-500 REV F5
087105F5.DWG	PLOT SCALE 1=1	SCALE 1=1 CAGE 51190 SHEET 1 OF 1

DATE	REV	CHANGE	APVD
10-28-94	B	PROD REL PER ECN #15676 J.I.M.	BM
10-2-95	C	INC ECN #16607 BP	BM

TOP VIEW

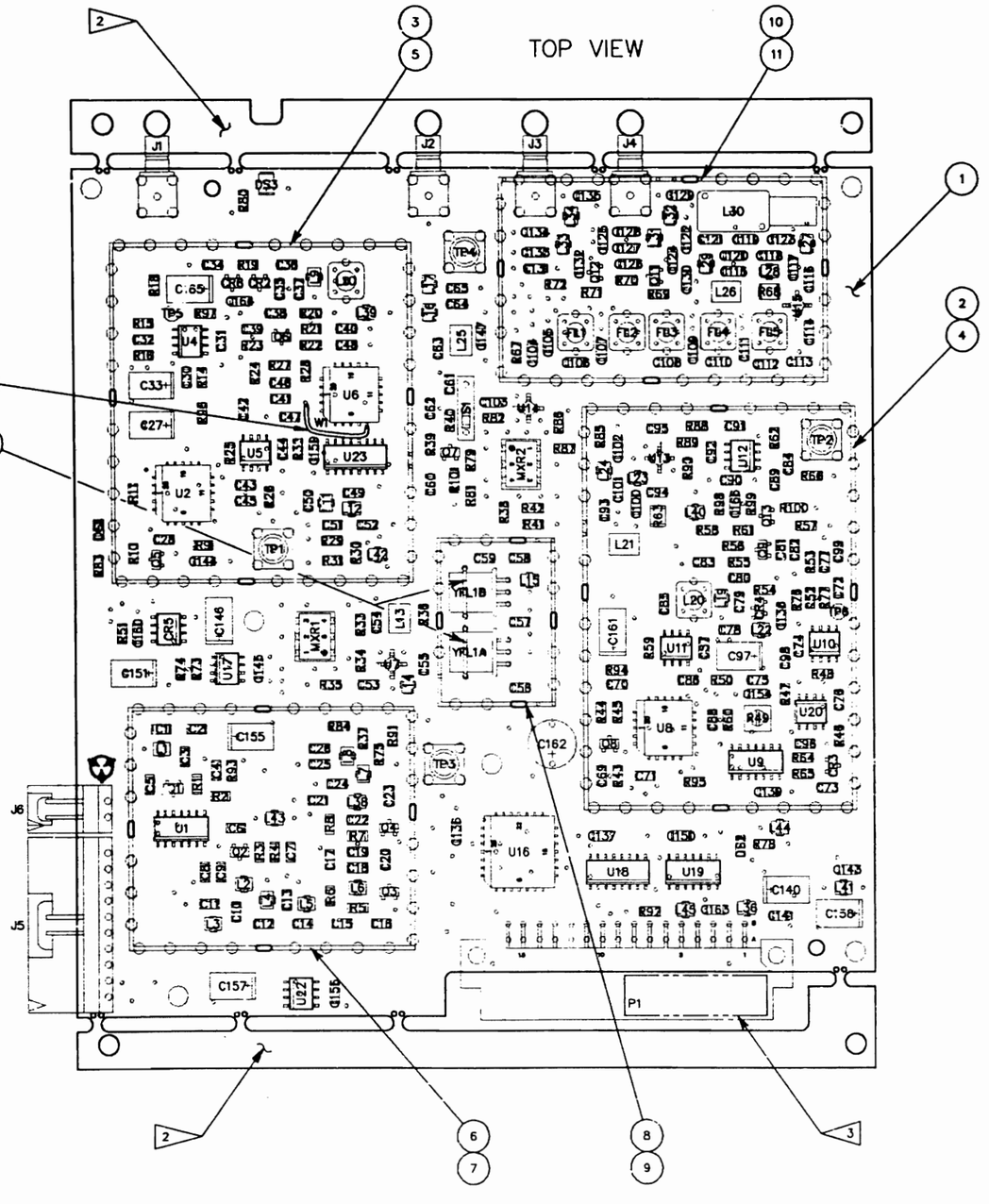

Scans by ArtekMedia © 2008

DATE	REV	CHANGE		APVD
8-20-92	D	DESIGN RELEASE	RLA	DKB
10-7-92	D-1	INC FMY-020	RLA	DKB
10-12-92	D-2	INC FMY-024	RLA	DKB
11-16-92	D-3	INC FMY-082		DKB
11-18-92	D-4	INC FMY-083	CJW	DKB
12-03-92	D-5	INC FMY-079	MKM	DKB
2-9-93	D6	INC FMY-109	MKM	DKB
3-1-93	E	INC FMY-119	RLA	DKB
4-29-93	E1	PROD REL PER ECN 15564	MKM	DKB
08-02-93	E2	INC ECN 15718	BP	BM
10/30/93	E3	INC ECN 15780	RH	BM

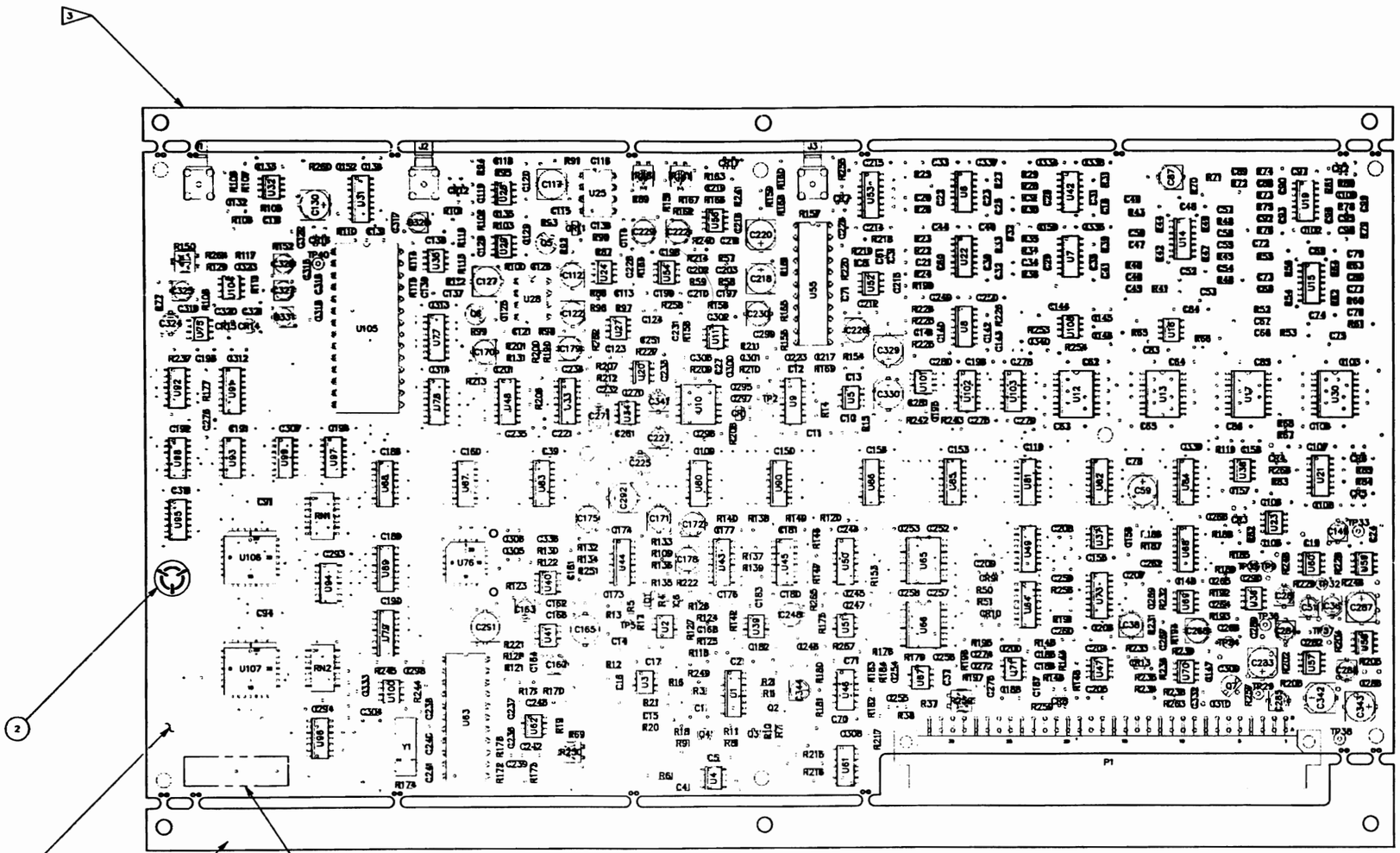

TOP VIEW

NOTES:

1. BASIC REFERENCE DESIGNATORS SHOWN, FOR COMPLETE DESIGNATOR PREFIXES REFER TO PRODUCT STRUCTURE, AND SYSTEM INTERCONNECT FOR APPLICATIONS WHERE USED.
2. NOTE NOT USED.
3. TO BE REMOVED PRIOR TO MECH. ASSY.
4. AFFIX MODULE IDENT LABEL HERE.

CAUTION:
CONTAINS PARTS AND ASSEMBLIES SUSCEPTIBLE TO DAMAGE BY ELECTROSTATIC DISCHARGE (ESD).

IFR SYSTEMS INC
10000 West York St., Wichita, Kansas 67215

DRAWN DATE: R. WEEKS 5-18-92	TITLE: ASSEMBLY DWG BASE BAND
CHECKED DATE: D.K.B. 8-20-92	
APPROVED DATE: M.BACHMAN 8-20-92	SIZE: C; DWG. NO.: 7010-8731-100; REV: E3
108711E3.PLT	SCALE: N.T.S.; DO NOT SCALE; FSCM 51190; SHEET 1 OF 2

DATE	REV	CHANGE	APVD
		SEE SHEET 1	

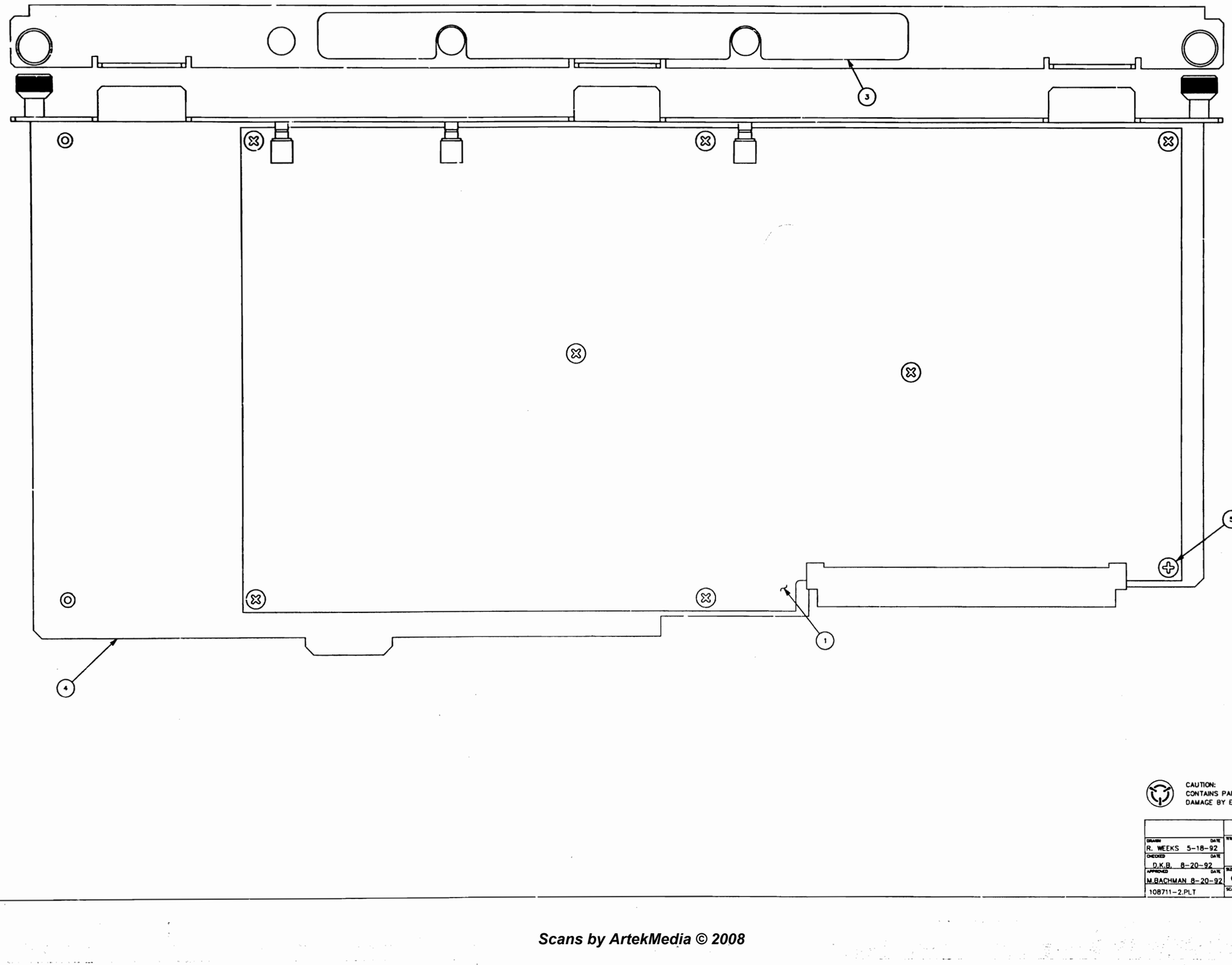

CAUTION:
CONTAINS PARTS AND ASSEMBLIES SUSCEPTIBLE TO DAMAGE BY ELECTROSTATIC DISCHARGE (ESD).

	IFR SYSTEMS INC 10200 West York St., Wichita, Kansas 67215	
DRAWN R. WEEKS 5-18-92	TITLE ASSEMBLY DWG BASE BAND	
CHECKED D.K.B. 8-20-92		
APPROVED M.BACHMAN 8-20-92	SIZE C	DWG. NO. 7010-8731-100 REV E3
108711-2.PLT	SCALE: N.T.S.	DO NOT SCALE FROM 51190 SHEET 2 OF 2

Scans by ArtekMedia © 2008

Scans by ArtekMedia © 2008

8. IC FUNCTIONS NOT USED:

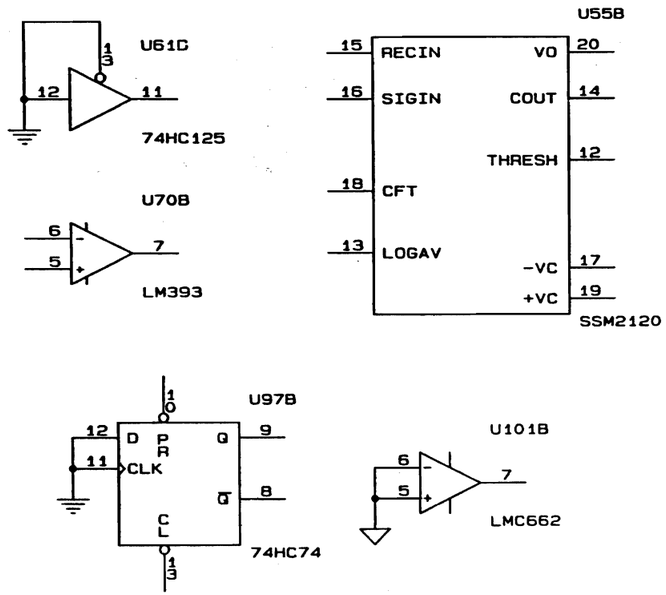

OrCAD Note: Only link first 6 files when generating a net list.

LINK
PAL.SCH
AGC.SCH
PK-DET.SCH
BB2.SCH
BBIO.SCH
FILTERS.SCH
BLOCK1.SCH
BLOCK2.SCH
BLOCK3.SCH
BITS.SCH

COVER.SCH

DATE	REV	CHANGE	APPROVED
10-7-92	D-1	INC FMY-020	D.K.BROKSCHMIDT
10-12-92	D-2	INC FMY-024	D.K.BROKSCHMIDT
11-16-92	D-3	INC FMY-062	D.K.BROKSCHMIDT
12-3-92	D-4	INC FMY-079	D.K.BROKSCHMIDT
3-24-93	E	INC FMY-119	D.K.BROKSCHMIDT
5-7-93	E-1	PROD REL per ECN15564	D.K.BROKSCHMIDT
8-9-93	E-2	INC ECN 15718	B. McVICAR
11-15-93	E-3	INC ECN 15780	B. McVICAR

CAUTION:

CONTAINS PARTS AND ASSEMBLIES SUSCEPTIBLE TO DAMAGE BY ELECTROSATIC DISCHARGE (ESD).

NOTES:
(UNLESS OTHERWISE SPECIFIED)

1. BASIC REFERENCE DESIGNATORS SHOWN. FOR COMPLETE DESIGNATOR PREFIXES REFER TO PRODUCT STRUCTURE AND SYSTEM INTERCONNECT FOR APPLICATIONS WHERE USED.
2. ALL RESISTORS ARE 1%, 1/8W.
3. ALL RESISTANCE IS EXPRESSED IN OHMS.
   ALL CAPACITANCE IS EXPRESSED IN MICROFARADS.
   ALL INDUCTANCE IS EXPRESSED IN MICROHENRIES.
4. HIGHEST REFERENCE DESIGNATIONS:
   C344, CR17, J3, P1, Q7, R267, RN2,
   TP40, U108, W1, Y1
5. REFERENCE DESIGNATIONS NOT USED:
   C42, C43, C56, C81, C82, C101, C151, C169, C277,
   R198, R230, R247, R261, TP4, U18, U72, U74
6. FOR INTERCONNECT/BLOCK DIAGRAM SEE APPLICATIONS WHERE USED.
7. U6, U7, U14, U15, U19, U21, U22, U42, & U46 CAN BE MC33184 OR TL064.
   U8 CAN BE MC33184 OR TL084.

DRAWN BY: DON J. BELISLE	DATE: 8-20-92	IFR SYSTEMS, INC. 10200 W. York St. Wichita, KS 67215
CHECKED BY: DEB BROKSCHMIDT	DATE: 8-20-92	Title: Schematic, BASEBAND
APPROVED BY: STAN PIERSON	DATE: 8-20-92	Size: B; Document Number: 0000-8731-100; REV: E-3; Date: November 15, 1993; Sheet 1 of 11

BASEBAND LOGIC #1

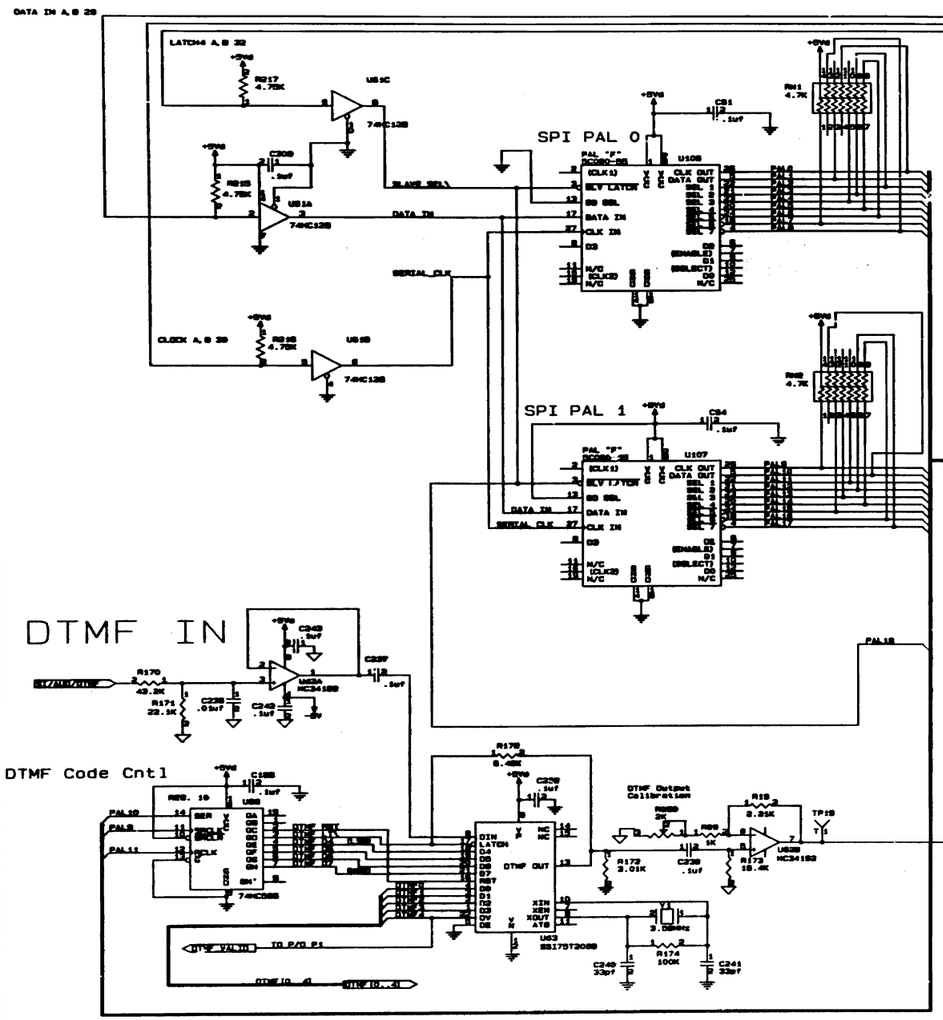

PAL BUS

DTMF GEN

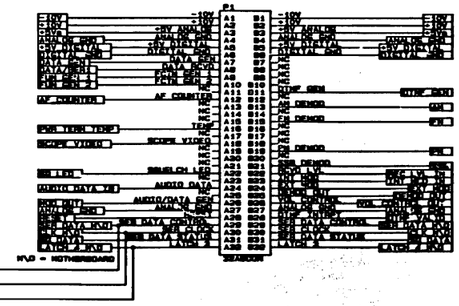

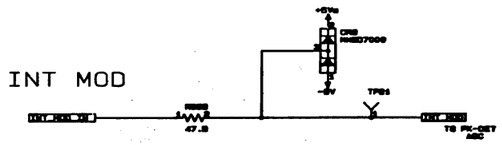

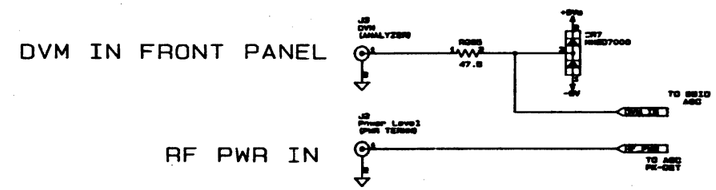

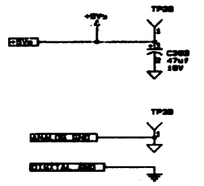

SUB REGULATORS

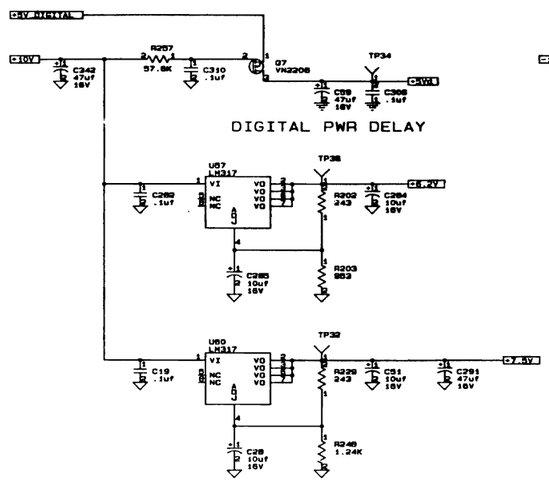

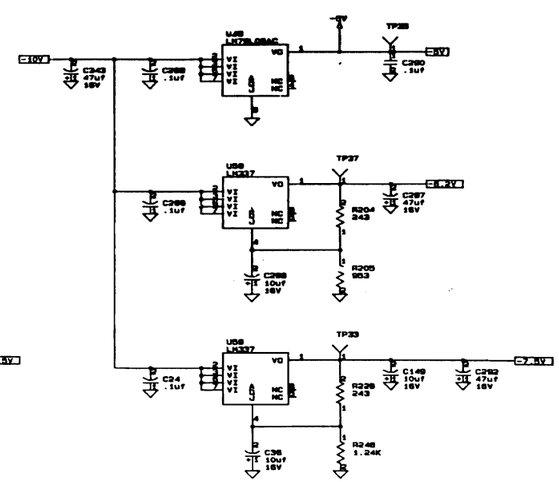

IFR SYSTEMS, INC.
10200 W. York St.
Wichita, KS 67215

Title: Schematic, BASEBAND

Size: D | Document Number: 0000-8731-100 | REV: E-3

Date: November 15, 1993 | Sheet 2 of 11 | PAL.SCH

Scans by ArtekMedia © 2008

Scans by ArtekMedia © 2008

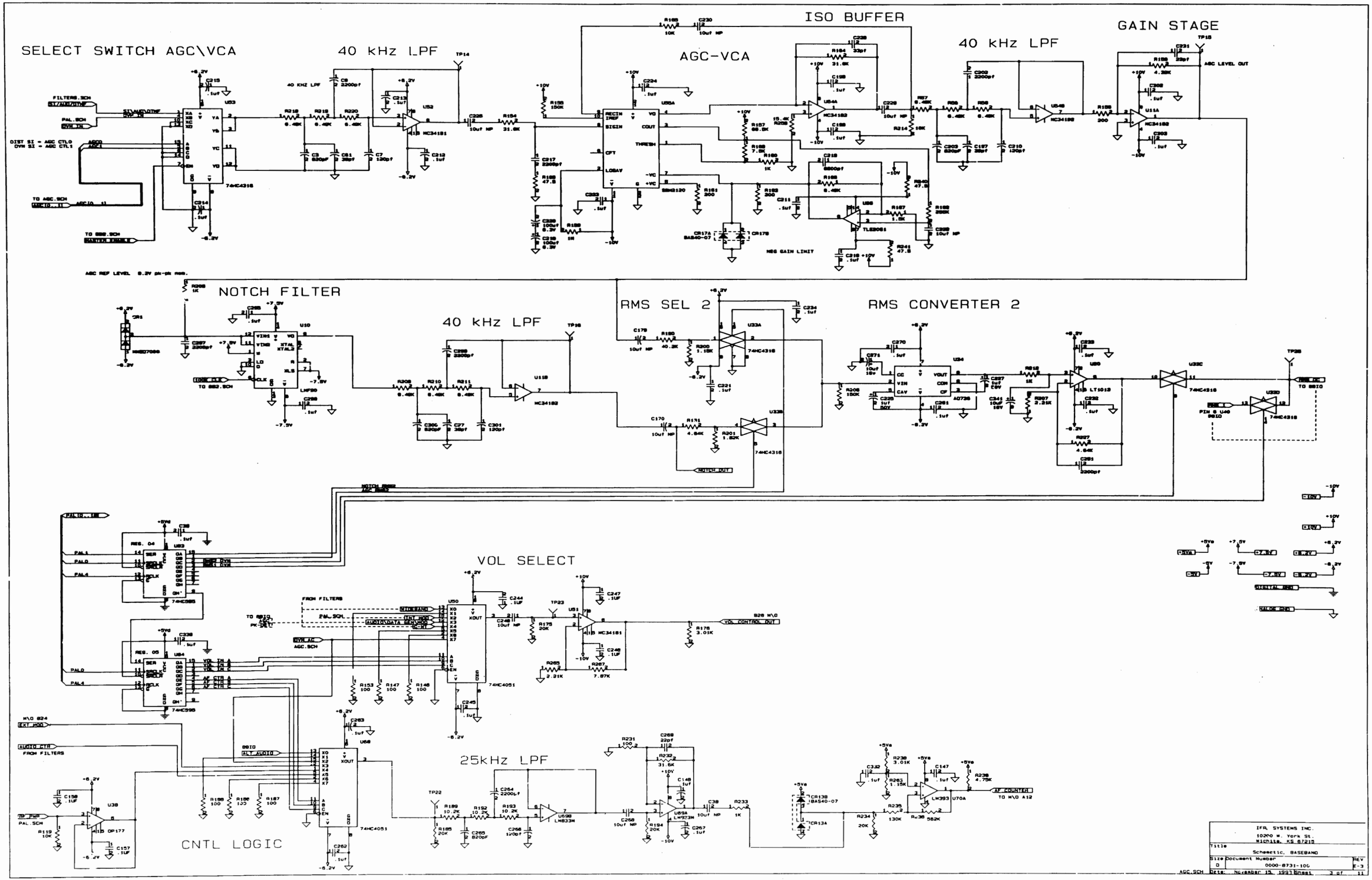

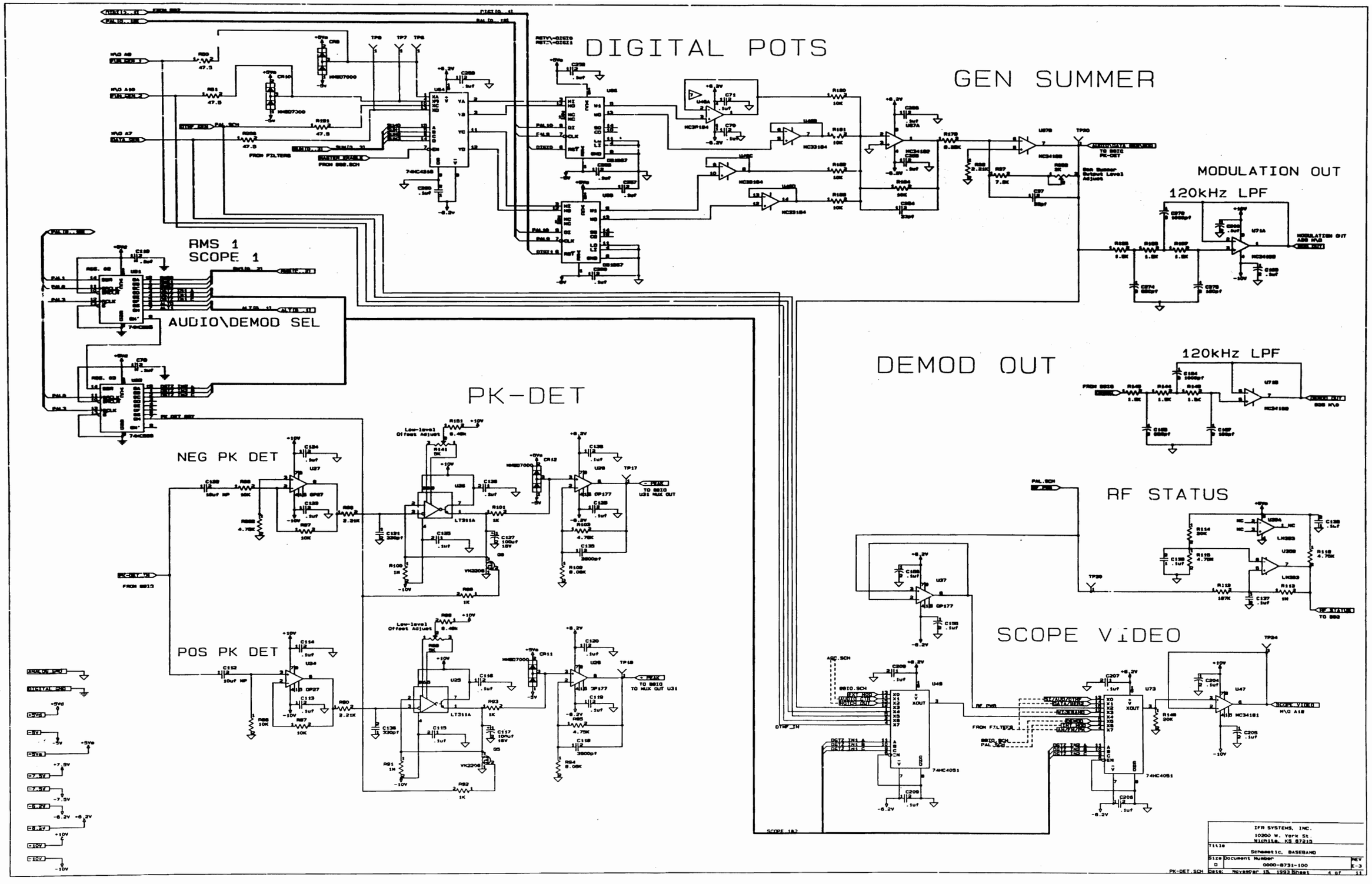

Scans by ArtekMedia © 2008

Scans by ArtekMedia © 2008

BASEBAND LOGIC #2

DVM ADC

ADC LSB

ADC MSB

DTMF Readout

DVM ADC Cntl

Squelch DAC Control

Squelch DAC

V1: Function Gen1
V2: Function Gen2
Z0: DTMF
Z1: Data Gen

IFR SYSTEMS, INC.
10200 W. York St.
Wichita, KS 67215

Title: Schematic, BASEBAND

Size: D | Document Number: 0000-8731-100 | REV: E-3

Date: November 15, 1993 | Sheet 5 of 11

BB2.SCH

DEMOD SELECTOR
AFTER FILTERBANK

TO FILTERS

DEMOD PATH

mux out

SQUELCH

RMS SEL

RMS 1

MUX TO A/D
D.C. OUT

TO U81 (PK-DET)

AUTO SWITCH
RMS CONVERTER

IFR SYSTEMS, INC.
10200 W. York St.
Wichita, KS 67215

Title: Schematic, BASEBAND

Size: D | Document Number: 0000-8731-100 | REV: K-3

8810.SCH | Date: November 13, 1993 | Sheet 6 of 11

Scans by ArtekMedia © 2008

Scans by ArtekMedia © 2008

FILTERBANK

"C"-WT FILTER

300Hz LPF

4kHz LPF

20kHz LPF

Crosspoint Control

CROSSPOINT #1

CROSSPOINT #2

CROSSPOINT #3

CROSSPOINT #4

300Hz HPF

300Hz HPF

4kHz HPF

4kHz HPF

IFR SYSTEMS, INC.
10200 W. York St.
Wichita, KS 67215

Title: Schematic, BASEBAND

Size: D | Document Number: 0000-8731-100 | REV: E-3

Date: November 15, 1991 | Sheet 7 of 11

FILTERB.SCH

Block Diagram (Part 1)

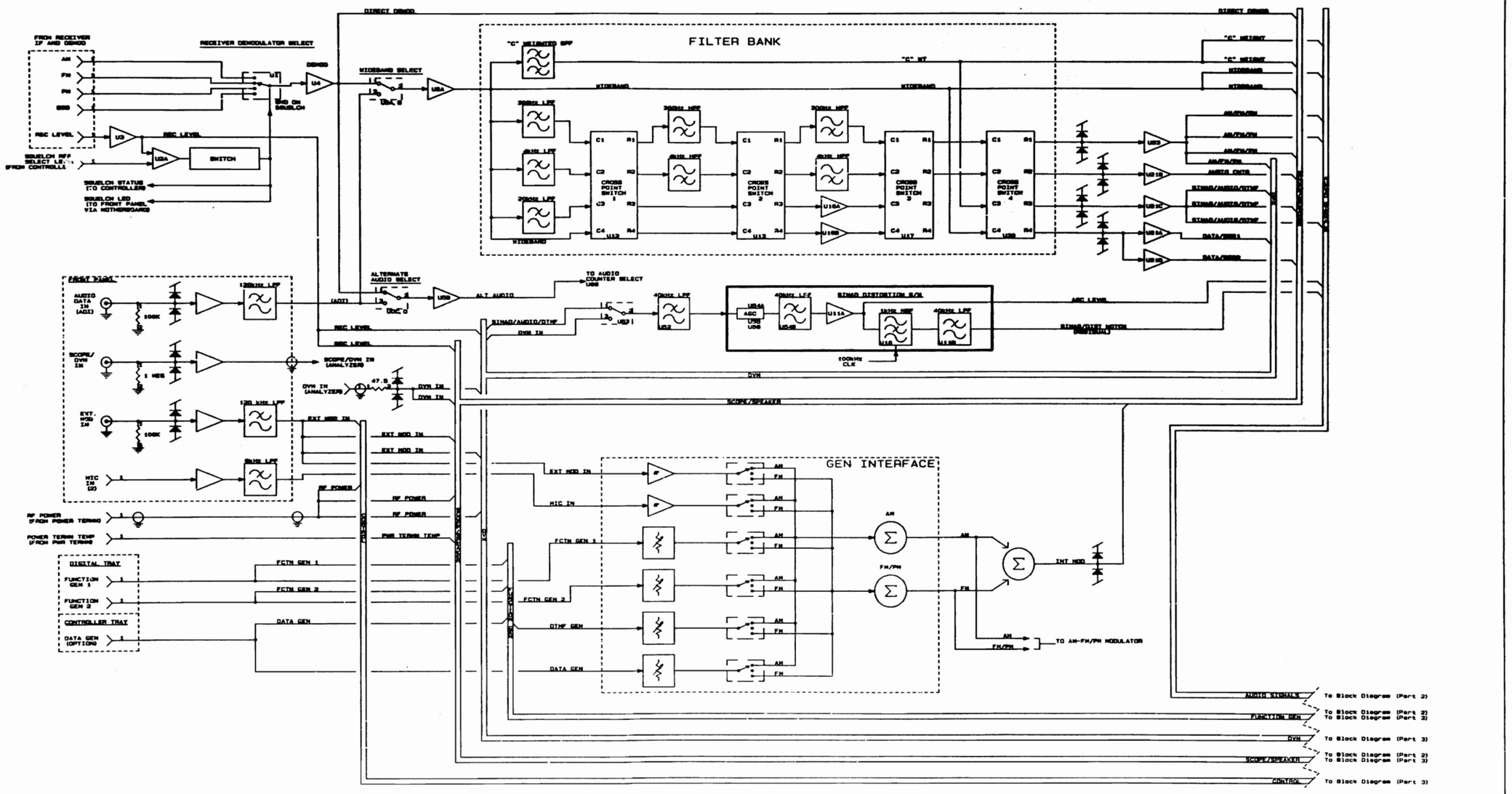

IFR Systems, Inc.
10200 W York St.
Wichita, KS 67215

Size	Document Number	REV
D	0000-8731-100	E-3

BLOCK1.SCH Date: November 15, 1993 Sheet 8 of 11

Scans by ArtekMedia © 2008

Scans by ArtekMedia © 2008

Block Diagram (Part 2)

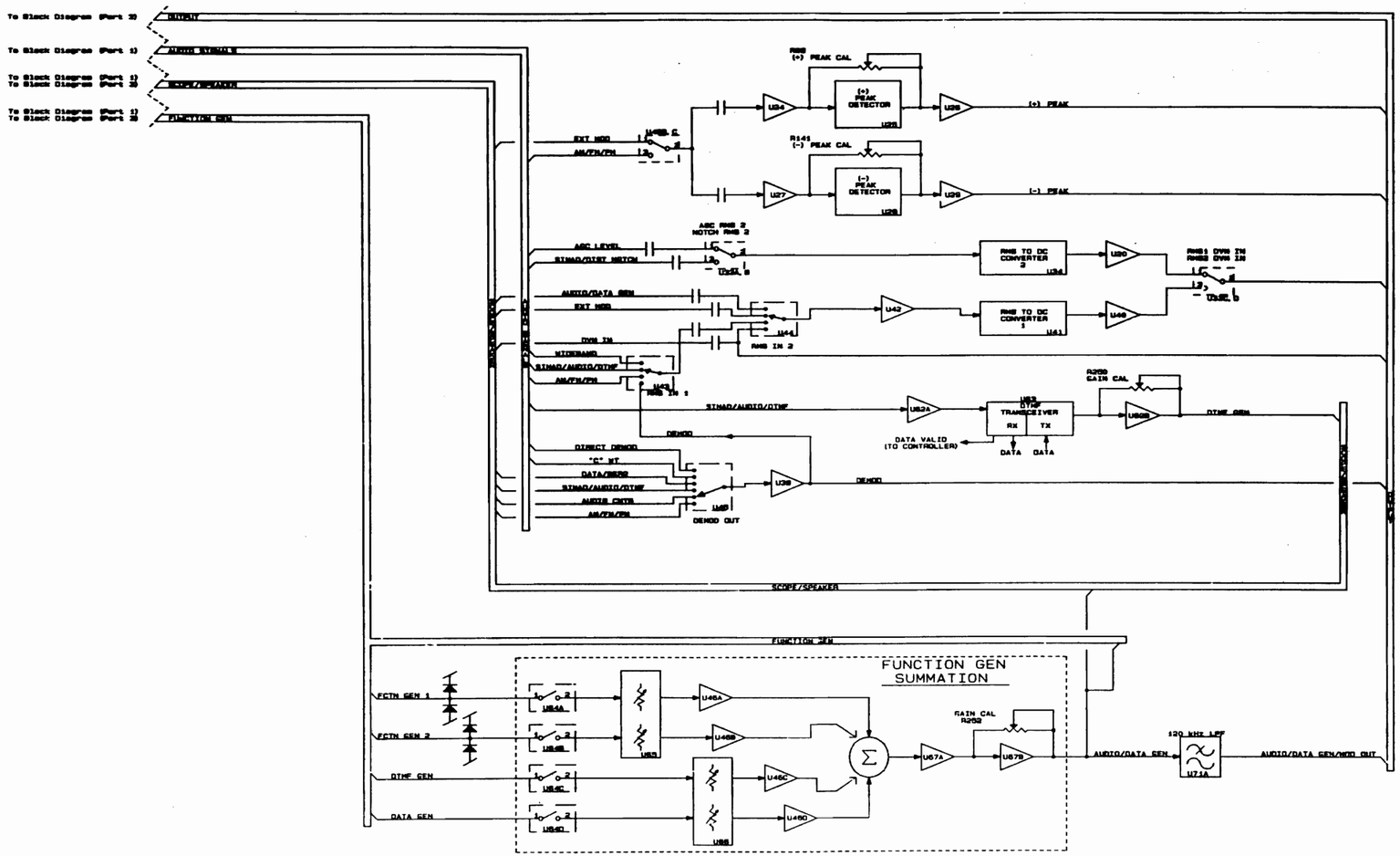

IFR Systems, Inc. 10200 W York St. Wichita, KS 67215		
Size: D	Document Number: 0000-8731-100	REV: E-3
BLOCK2.SCH	Date: November 15, 1993	Sheet 9 of 11

Block Diagram (Part 3)

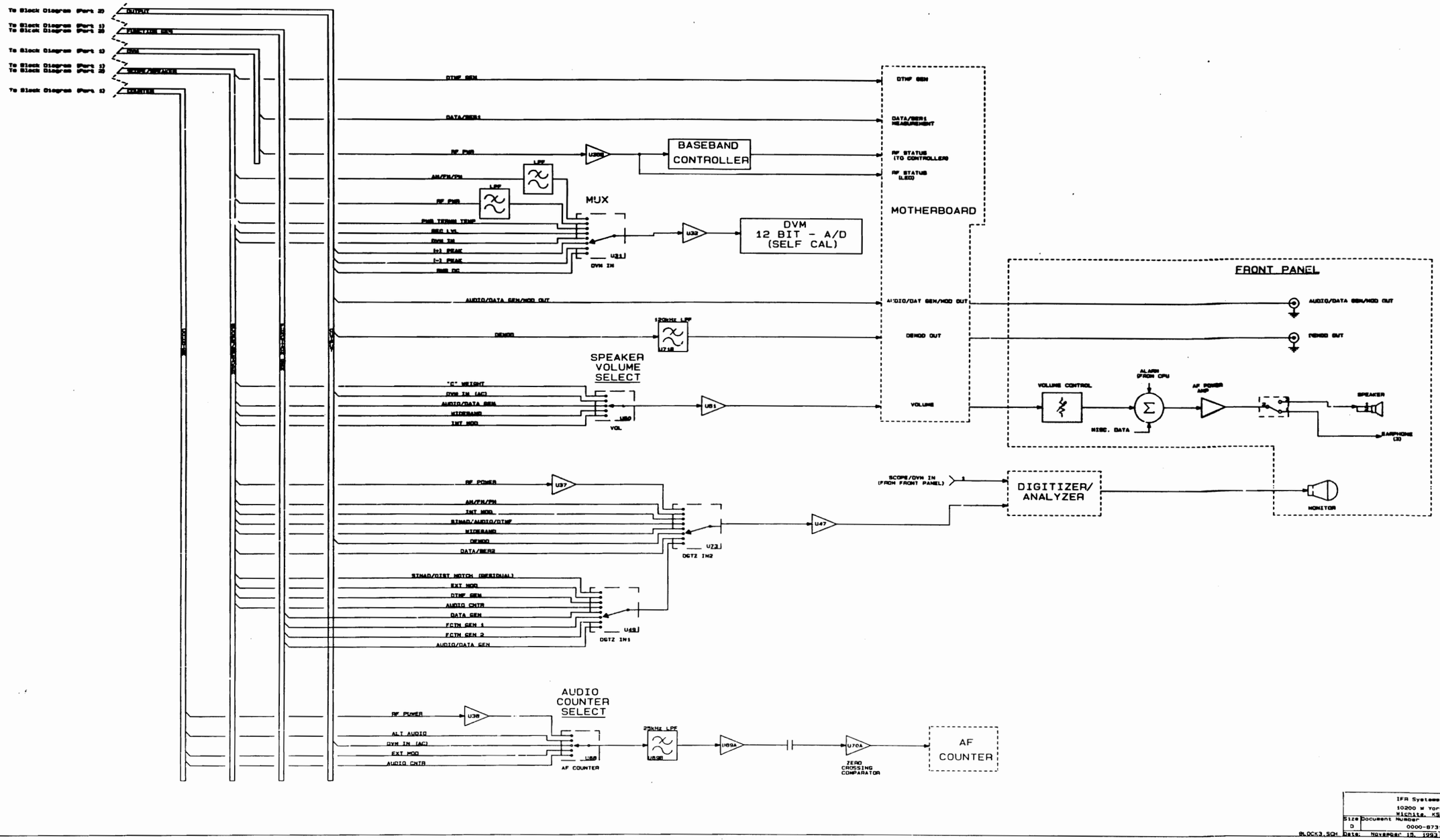

IFR Systems, Inc. 10200 W York St. Wichita, KS 67215		
Size: D	Document Number: 0000-8731-100	REV: E-3
BLOCK3.SCH	Date: November 15, 1993	Sheet 10 of 11

Scans by ArtekMedia © 2008

Scans by ArtekMedia © 2008

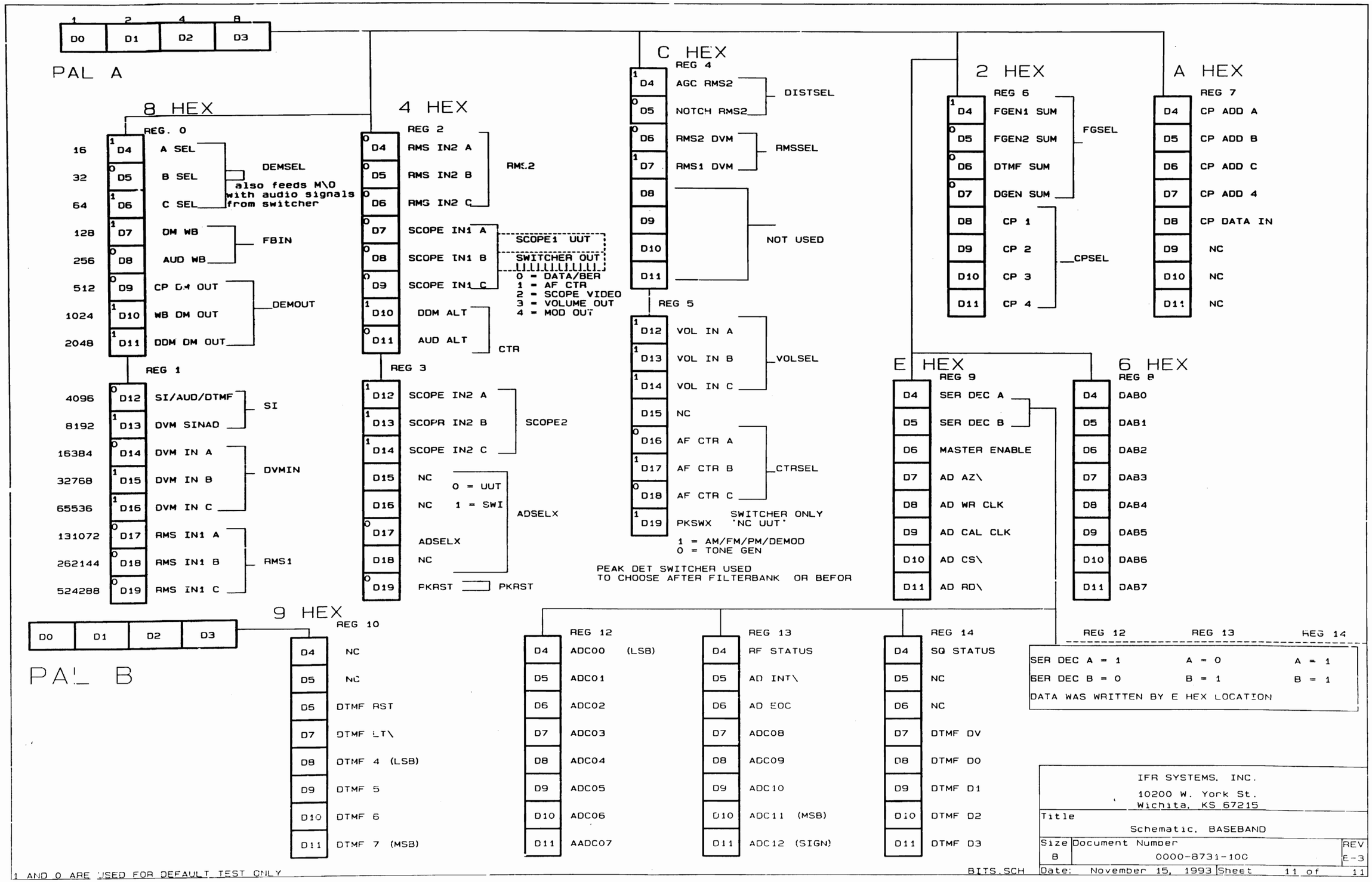

DATE	REV	CHANGE	APVD
4/10/95	A	RELEASE	RH/DKB

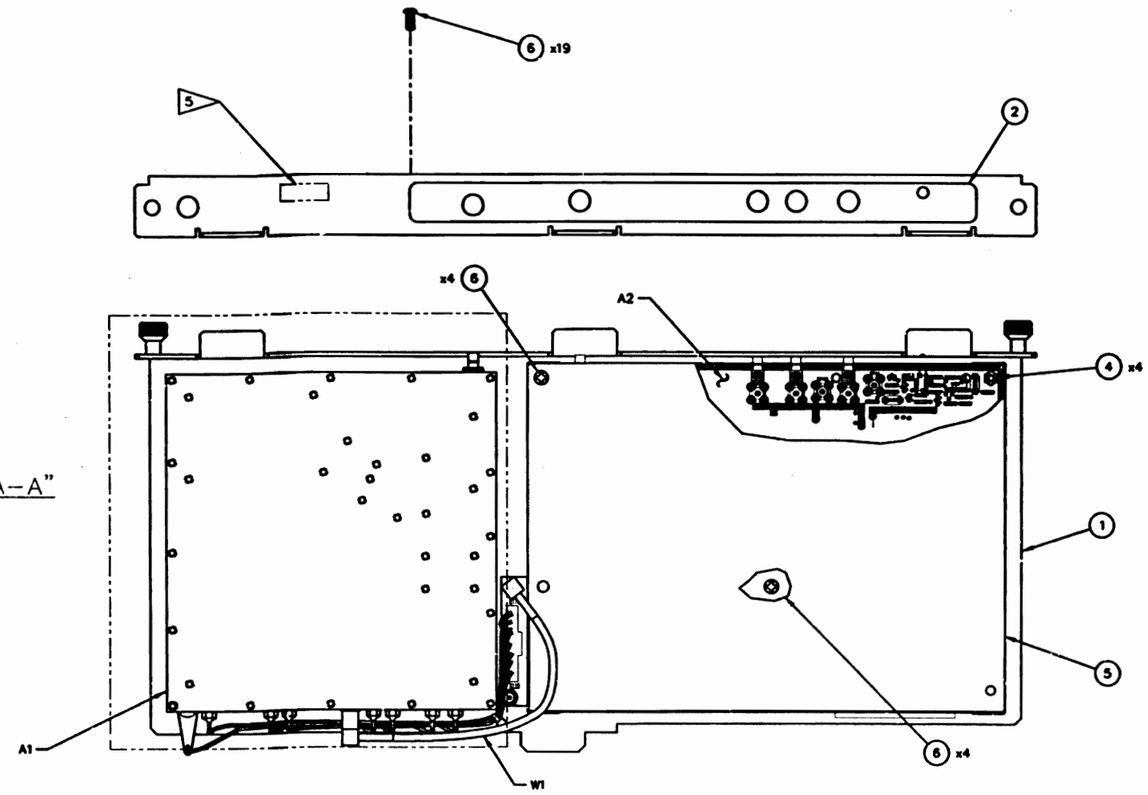

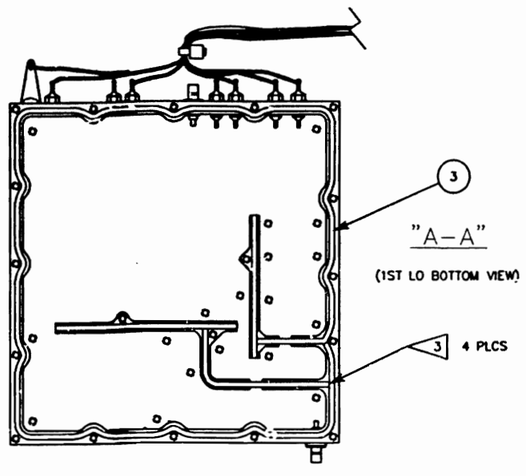

NOTES:

1. BASIC REFERENCE DESIGNATORS SHOWN, FOR COMPLETE DESIGNATOR PREFIXES REFER TO PRODUCT STRUCTURE, AND SYSTEM INTERCONNECT FOR APPLICATIONS WHERE USED.
2. MECH. ASS'Y DRAWING SHOWS ONLY PORTIONS OF PC BD ASSY'S REQUIRED FOR REF. ONLY.
3. CUT ENDS OF GASKET MUST MEET UNDER COMPRESSION WHEN INSTALLED.
4. NOTE NOT USED.
5. PLACE MODULE IDENT LABEL HERE.

CAUTION:
CONTAINS PARTS AND ASSEMBLIES SUSCEPTIBLE TO DAMAGE BY ELECTROSTATIC DISCHARGE (ESD).

"THIS DOCUMENT CONTAINS PROPRIETARY INFORMATION OF IFR, INC. AND IS NOT TO BE DISCLOSED, REPRODUCED, OR PUBLISHED WITHOUT IFR'S APPROVAL."

		IFR SYSTEMS INC	
DRAWN HARRIS 2/10/95		TITLE MECH ASSY, GENERATOR TRAY	
CHECKED D.BROKSCHMIDT 4/6/95			
APPROVED M.BACHMAN 4/6/95	SIZE D	DWG. NO. 7005-0640-600	REV A
0064060.DWG	PLOT SCALE 1=1	SCALE 1=1	CAGE 51190 SHEET 1 OF 1

Scans by ArtekMedia © 2008

Scans by ArtekMedia © 2008

DATE	REV	CHANGE	APVD
4/10/95	A	RELEASE RH	DKB

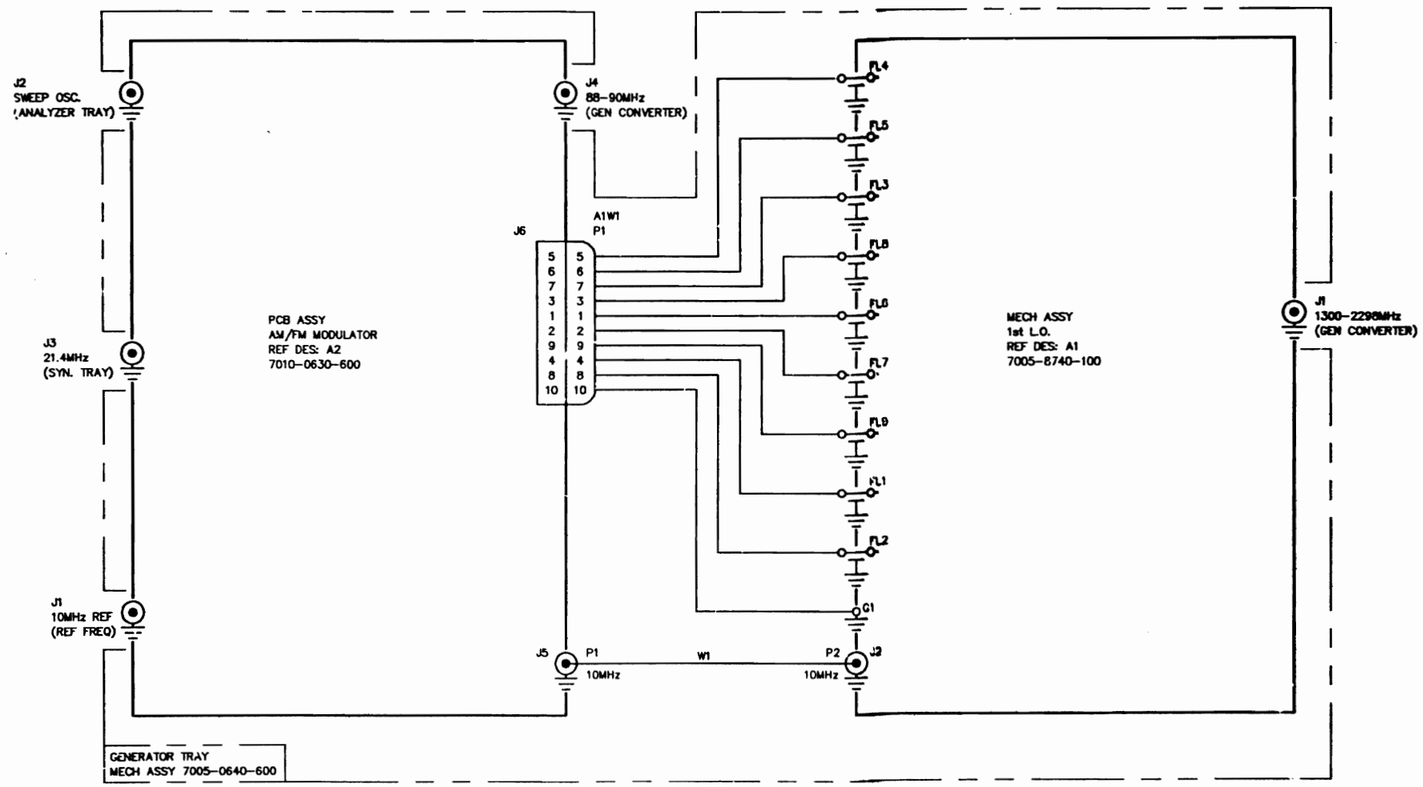

NOTES:

1. BASIC REFERENCE DESIGNATORS SHOWN, FOR COMPLETE DESIGNATOR PREFIXES REFER TO PRODUCT STRUCTURE, AND SYSTEM INTERCONNECT FOR APPLICATIONS WHERE USED.

"THIS DOCUMENT CONTAINS PROPRIETARY INFORMATION OF IFR, INC. AND IS NOT TO BE DISCLOSED, REPRODUCED, OR PUBLISHED WITHOUT IFR'S APPROVAL."

IFR SYSTEMS INC
10300 West York St., Wichita, Kansas 67215

DRAWN DATE	HARRIS 2/10/95
CHECKED DATE	D.BROKSCHMIDT 4/6/95
APPROVED DATE	M.BACHMAN 4/6/95
	006406A0.DWG

TITLE: INTERCONNECT GENERATOR TRAY

SIZE	DWG. NO.	REV
D	0000-0640-600	A

PLOT SCALE: 1=1 | SCALE 1=1 | CAGE 51190 | SHEET 1 OF 1

DATE	REV	CHANGE		APVD
9/22/92	F	DESIGN RELEASE	RH	DKB
10/26/92	F1	INC FMY-047	RH	DKB
12/14/92	F2	INC FMY-084	RH	DKB
1/28/93	G	INC FMY-073	RH	DKB
04/13/93	G1	PROD. REL. PER ECN 15564	BP	DKB
08/23/93	G2	INC ECN 15769	BP	BM
04/04/95	H	INC ECN 16477	RH	BM

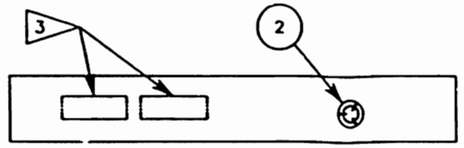

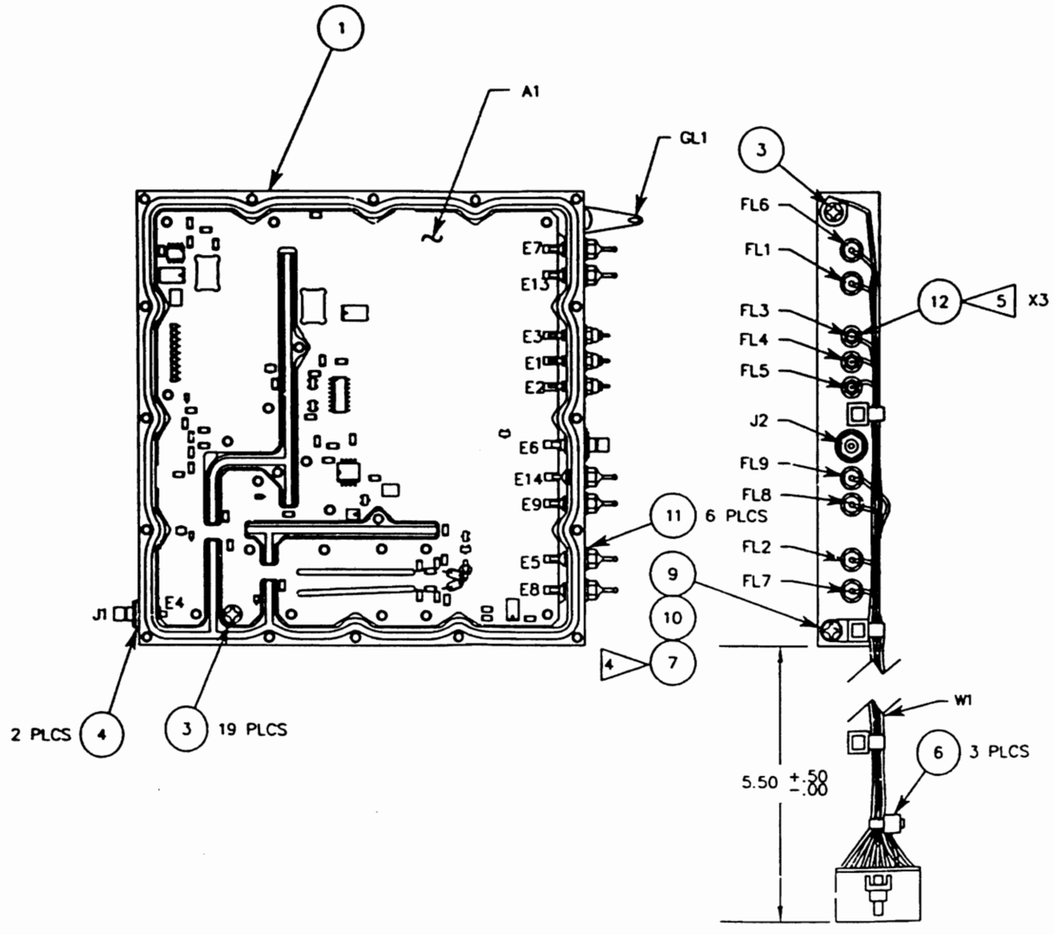

NOTES:

1. BASIC REFERENCE DESIGNATORS SHOWN, FOR COMPLETE DESIGNATOR PREFIXES REFER TO PRODUCT STRUCTURE, AND SYSTEM INTERCONNECT FOR APPLICATIONS WHERE USED.
2. MECH. ASS'Y DRAWING SHOWS ONLY PORTIONS OF PC BD ASSY'S REQUIRED FOR REF. ONLY.

3 AFFIX MODULE IDENTIFICATION LABELS HERE.

4 ADD WASHER ITEM #7 BETWEEN TYRAP AND BLOCK ITEM #10.

5 ADD WASHER (12) BETWEEN FL3,FL4, FL5 AND BLOCK (1). TORQUE @ 32 IN/OZ.

WIRE RUNNING LIST				
DESG	FROM	TO	COLOR	AWG
W1W1	P1-01	FL6	RED	26
W1W2	P1-02	FL7	YELLOW	26
W1W3	P1-03	FL8	VIOLET	26
W1W4	P1-04	FL1	BLUE	26
W1W5	P1-05	FL4	VIO/WHT	26
W1W6	P1-06	FL5	BRN/WHT	26
W1W7	P1-07	FL3	RED/WHT	26
W1W8	P1-08	FL2	GRN/WHT	26
W1W9	P1-09	FL9	ORN	26
W1W10	P1-10	GL1	BLK	26

"THIS DOCUMENT CONTAINS PROPRIETARY INFORMATION OF IFR, INC. AND IS NOT TO BE DISCLOSED, REPRODUCED, OR PUBLISHED WITHOUT IFR'S APPROVAL."

IFR SYSTEMS, INC
10200 West York St., Wichita, Kansas 67215

DRAWN DATE	HARRIS 5/18/92
CHECKED DATE	S.PERKINS 8/18/92
APPROVED DATE	M.BACHMAN 9/22/92
	087401H0.DWG
TITLE	MECH ASSY, 1ST LO
SIZE	C
DWG. NO.	7005-8740-100
REV	H
PLOT SCALE	1=1
SCALE	1=1
CAGE	51190
SHEET	1 OF 1

Scans by ArtekMedia © 2008

Scans by ArtekMedia © 2008

DATE	REV	CHANGE	APVD
4-6-95	A	RELEASE	DKB
10/13/95	A1	INC RC 16583 RH	DKB

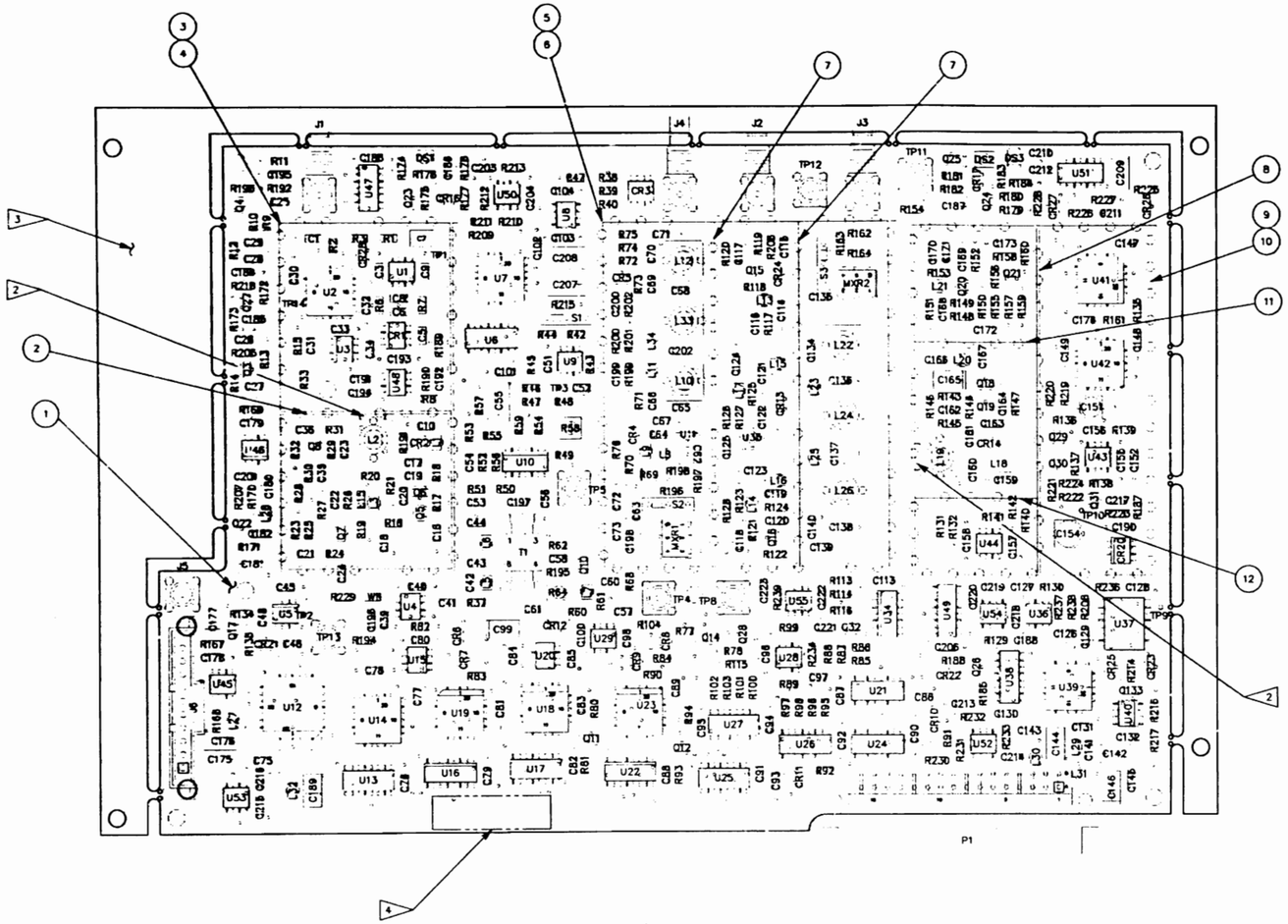

NOTES:

1. BASIC REFERENCE DESIGNATORS SHOWN, FOR COMPLETE DESIGNATOR PREFIXES REFER TO PRODUCT STRUCTURE, AND SYSTEM INTERCONNECT FOR APPLICATIONS WHERE USED.
2. APPLY WAX TO L2 & L19 BETWEEN SHIELD AND BODY OF CORE AFTER TEST.
3. TO BE REMOVED PRIOR TO MECH. ASSY.
4. AFFIX MODULE IDENT LABEL HERE.

CAUTION:
CONTAINS PARTS AND ASSEMBLIES SUSCEPTIBLE TO DAMAGE BY ELECTROSTATIC DISCHARGE (ESD).

DRAWN R. AST 1-13-95	IFR SYSTEMS INC 10200 West York St., Wichita, Kansas 67215
CHECKED D.K.B. 4-6-95	TITLE ASSEMBLY DWG AM FM MODULATOR
APPROVED S.PIERSON 4-6-95	SIZE D · DWG. NO. 7010-0630-600 · REV A1
100606A1.PLT	SCALE: NA · DO NOT SCALE · FSCM 51190 · SHEET 1 of 1

DATE	REV	CHANGE	APVD
8/19/92	D	DESIGN RELEASE RH .	DKB
10/30/92	D1	INC FMY-052 RH	DKB
1/4/93	D2	INC FMY-095 RH	DKB
04/06/93	D3	PROD REL ECN 15564 BP	DKB
08/23/93	D4	PRODUCT EQUAL TO D5	
11/17/93	D5	INC ECN 15769 & 15769A BP	BM

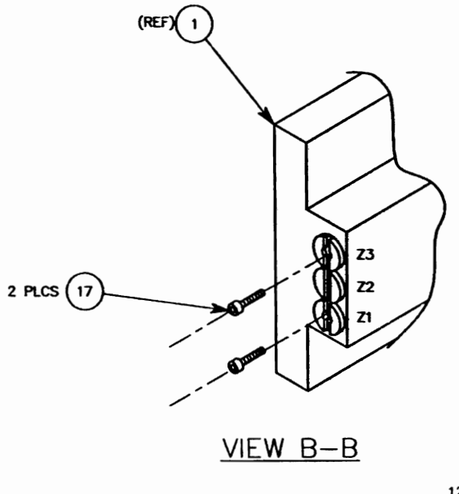

VIEW B-B

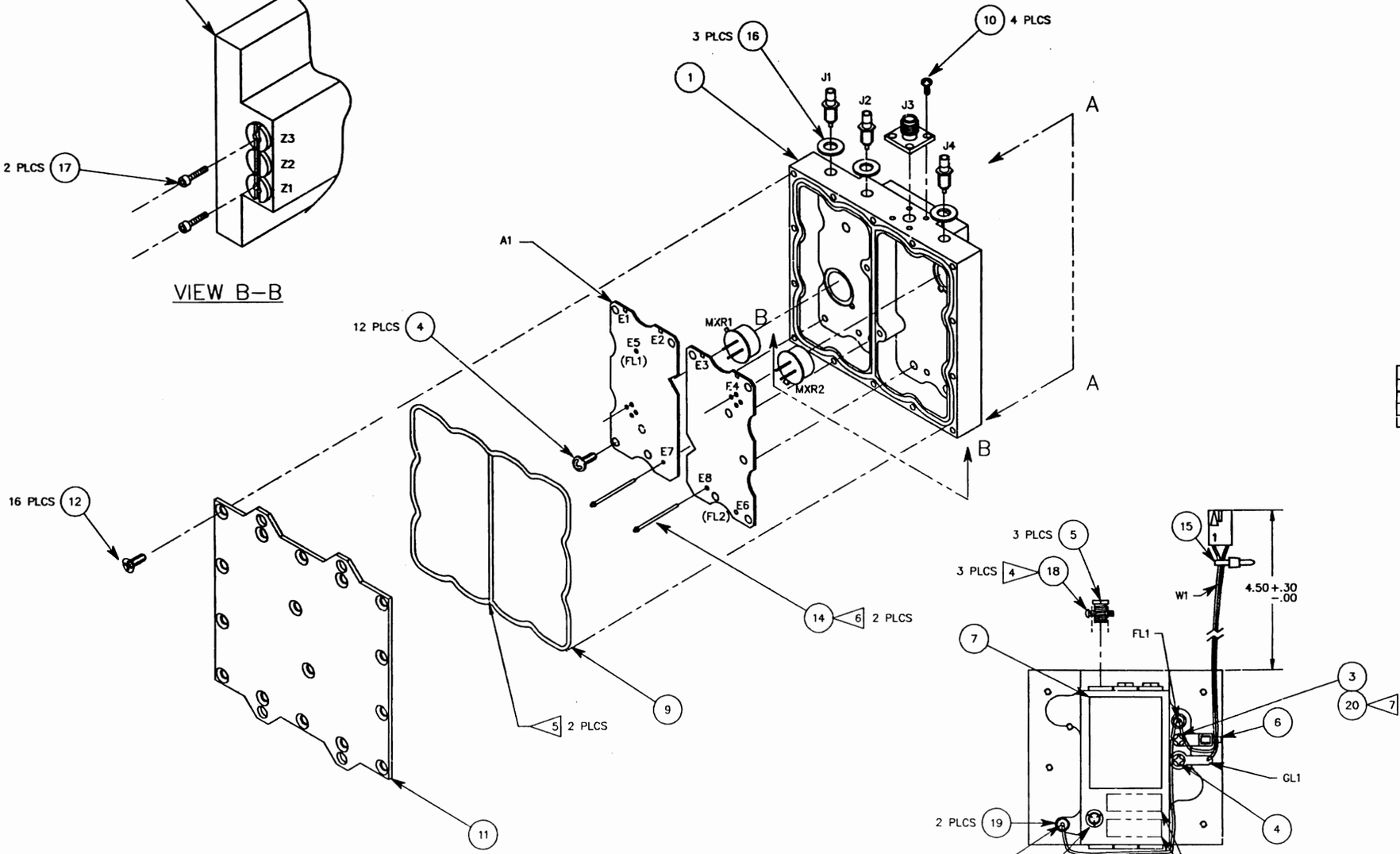

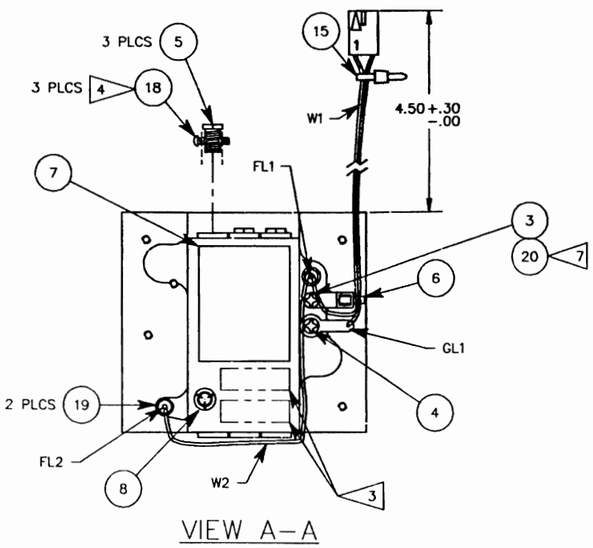

VIEW A-A

NOTES:

1. BASIC REFERENCE DESIGNATORS SHOWN, FOR COMPLETE DESIGNATOR PREFIXES REFFR TO PRODUCT STRUCTURE, AND SYSTEM INTERCONNECT FOR APPLICATIONS WHERE USED.
2. MECH. ASS'Y DRAWING SHOWS ONLY PORTIONS OF PC BD ASSY'S REQUIRED FOR REF. ONLY.
3. AFFIX MODULE IDENTIFICATION LABELS HERE.
4. THREAD NYLON SCREW INTO SLUG UNTIL THREADS ARE EXTENDING PAST SLUG ABOUT EQUAL DISTANCE. CUT OFF BOTH ENDS OF SCREW FLUSH TO SLUG THREADS.
5. CUT ENDS OF GASKET MUST MEET UNDER COMPRESSION WHEN INSTALLED.
6. PINS ARE TO BE FULLY INSERTED INTO TUNING POLE. CUT OFF EXCESS PIN AFTER SOLDERING.
7. ADD WASHER ITEM #20 BETWEEN ITEM #3 AND ITEM #6.

WIRE RUNNING LIST				
DESG	FROM	TO	COLOR	AWG
W1W1	P1-01	FL1	RED	22
W1W2	P1-02	GL1	BLACK	22
W2	FL2	FL1	RED	22

CAUTION:
CONTAINS PARTS AND ASSEMBLIES SUSCEPTIBLE TO DAMAGE BY ELECTROSTATIC DISCHARGE (ESD).

	IFR SYSTEMS INC 10200 West York St., Wichita, Kansas 67215
DRAWN HARRIS 4/16/92	TITLE MECH ASSY GEN CONVERTER
CHECKED S.PERKINS 8/17/92	
APPROVED M.BACHMAN 8/20/92	SIZE D DWG. NO. 7005-8740-300 REV 05
087403D5.DWG	PLOT SCALE 1=1 SCALE 1=1 CAGE 51190 SHEET 1 OF 1

Scans by ArtekMedia © 2008

Scans by ArtekMedia © 2008

DATE	REV	CHANGE	APPROVED
8-14-92	D	DESIGN RELEASE	DKB
04-05-93	D1	PROD REL per ECN15564	DKB

NOTES:
(UNLESS OTHERWISE SPECIFIED)

1. BASIC REFERENCE DESIGNATORS SHOWN. FOR COMPLETE DESIGNATOR PREFIXES REFER TO PRODUCT STRUCTURE AND SYSTEM INTERCONNECT FOR APPLICATIONS WHERE USED.

2. ALL RESISTORS ARE 1%, 1/8W.

3. ALL RESISTANCE IS EXPRESSED IN OHMS.
ALL CAPACITANCE IS EXPRESSED IN MICROFARADS.
ALL INDUCTANCE IS EXPRESSED IN MICROHENRIES.

4. HIGHEST REFERENCE DESIGNATIONS:

7010-8730-300

C17 L3 Q1 R32 U2

7005-8740-300

FL2 GL1 J4 MXR2 P1 Z3

5. REFERENCE DESIGNATIONS NOT USED:

7010-8730-300

C11, C14, R1-3, R25, R29

7005-8740-300

NONE

6. FOR INTERCONNECT/BLOCK DIAGRAM SEE APPLICATIONS WHERE USED.

7. IC FUNCTIONS NOT USED:

NONE

*- INDICATES PRINTED TRANSMISSION LINES OF OTHER THAN 50 OHMS IMPEDANCE WHICH CONSTITUTE CIRCUIT ELEMENTS. 50 OHM TRANSMISSION LINES ARE NOT SHOWN.

CAUTION:

CONTAINS PARTS AND ASSEMBLIES SUSCEPTIBLE TO DAMAGE BY ELECTROSATIC DISCHARGE (ESD).

DRAWN R. LANGRIDGE 5-27-92	IFR SYSTEMS, INC. 10200 W YORK STREET WICHITA, KS 67215-8935
CHECKED DEB BROKSCHMIDT 8-14-92	Title: CIRCUIT SCHEMATIC, GEN CONVERTER
APPROVED STAN PIERSON 8-14-92	Size: B; Document Number: 0000-8740-300; REV: D-1
	Date: April 29, 1993; Sheet 1 of 3

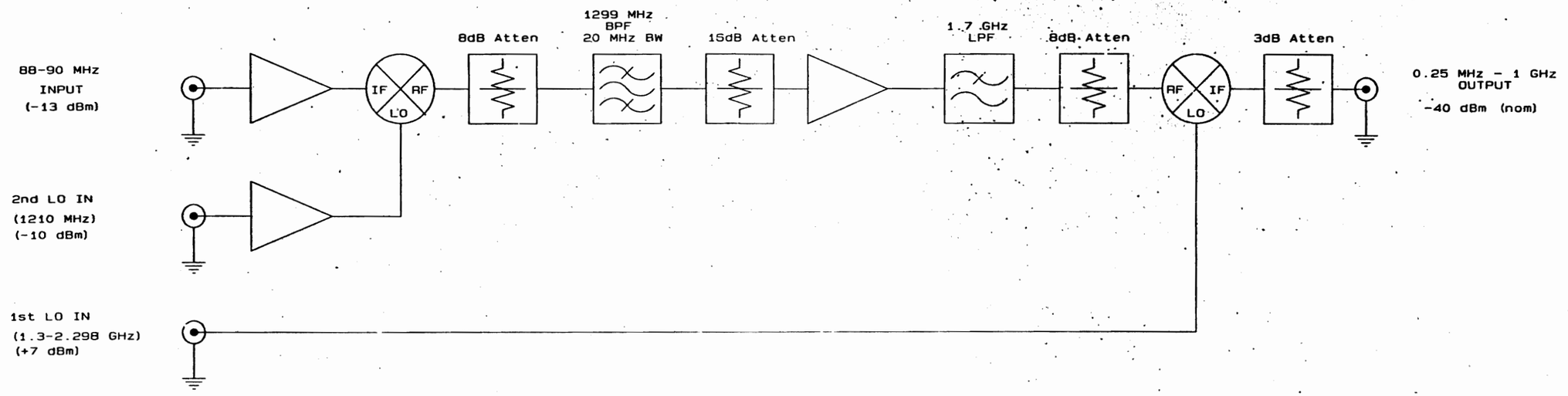

IFR SYSTEMS
10200 W YORK STREET
WICHITA, KS 67215-8935

Title
CIRCUIT SCHEMATIC, GEN CONVERTER

Size	Document Number	REV
B	0000-8740-300	D-1

Date: April 29, 1993 Sheet 2 of 3

Scans by ArtekMedia © 2008

Scans by ArtekMedia © 2008

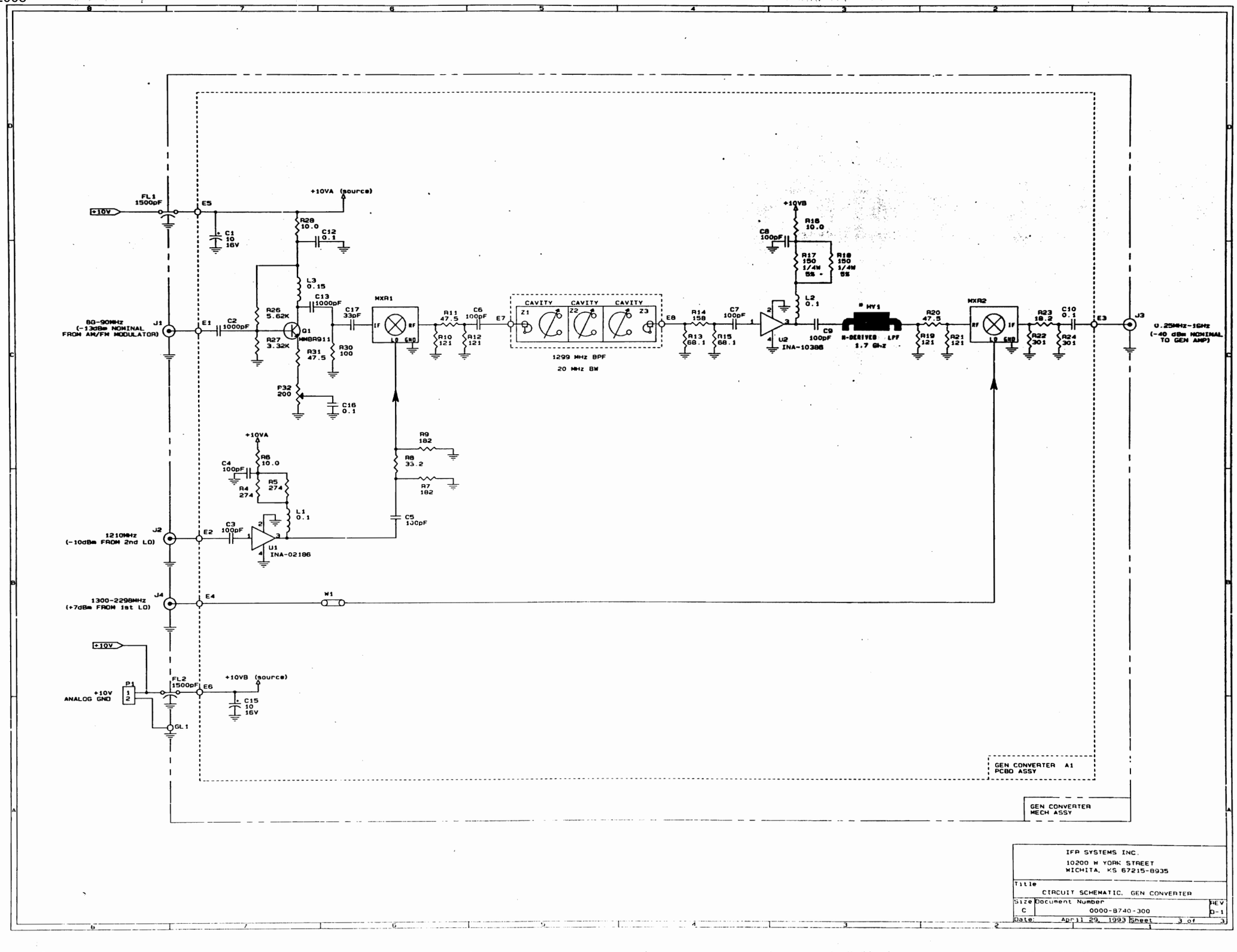

IFR SYSTEMS INC.
10200 W YORK STREET
WICHITA, KS 67215-8935

Title: CIRCUIT SCHEMATIC, GEN CONVERTER

Size	Document Number	REV
C	0000-8740-300	D-1

Date: April 29, 1993 Sheet 3 of 3

DATE	REV	CHANGE	APVD
8-20-92	D	DESIGN RELEASE	DKB
10-6-92	D1	INC FMY-017	DKB
10-19-92	D2	INC FMY-032	DKB
11-16-92	D3	INC FMY-062	DKB
11-18-92	D4	INC FMY-063	DKB
12-1-92	D5	INC FMY-077	DKB
1-13-93	D6	INC FMY-100	DKB
11-23-92	E	INC FMY-068 CJW	DKB
5-03-93	E1	PROD REL PER ECN 15564 MKM	DKB
6-11-93	E2	INC ECN 15691 RRW	DKB
12-8-94	E3	INC RC 16318 MKM	BM
7/14/95	F	INC ECN 16555 BP	BM
8/12/95	G	INC ECN 16599 BP	BM
12/4/95	H	INC ECN 16807 BP	BM
1-10-96	J	INC ECN 16858 RLA	DC
2-28-96	K	INC ECN 16866 MKM	BM

SEE DETAIL "B"

SEE DETAIL "C"

SEE DETAIL "A" 3 PLCS

TOP VIEW

DETAIL "A"

RED DOT

(YFL68),(YFL79),(YFL88)

BLACK DOT

(YFL6A),(YFL7A),(YFL8A)

DETAIL "B"

(C472) OR (C473)

(R436) OR (R445)

SOLDER CAP TO TOP OF RES

DETAIL "C"

NOTES

1. BASIC REFERENCE DESIGNATORS SHOWN, FOR COMPLETE DESIGNATOR PREFIXES REFER TO PRODUCT STRUCTURE, AND SYSTEM INTERCONNECT FOR APPLICATIONS WHERE USED.
2. NOTE NOT USED.
3. TO BE REMOVED PRIOR TO MECH ASSY.
4. AFFIX MODULE IDENT LABEL HERE.
5. YFL206, YFL207 AND YFL208 (2302-0107-15) ARE MATCHED SETS OF TWO'S, THE ORDER AND ORIENTATION ARE IMPORTANT. DO NOT BREAK UP SETS.
6. CUT PATH

CAUTION:
CONTAINS PARTS AND ASSEMBLIES SUSCEPTIBLE TO DAMAGE BY ELECTROSTATIC DISCHARGE (ESD).

DRAWN R. WEEKS 2-12-91	IFR SYSTEMS, INC. 10200 West York St., Wichita, Kansas 67215	
CHECKED M.BACHMAN 8-20-92	TITLE ASSY DWG ANALYZER	
APPROVED S.PIERSON 8-20-92	SIZE D	DWG NO 7010-8731-300 REV K
108713K0.PLT	SCALE N.T.S.	DO NOT SCALE FROM 51190 SHEET 1 OF 1

Scans by ArtekMedia © 2008

Scans by ArtekMedia © 2008

DATE	REV	CHANGE	VND
		FE SHT 1	

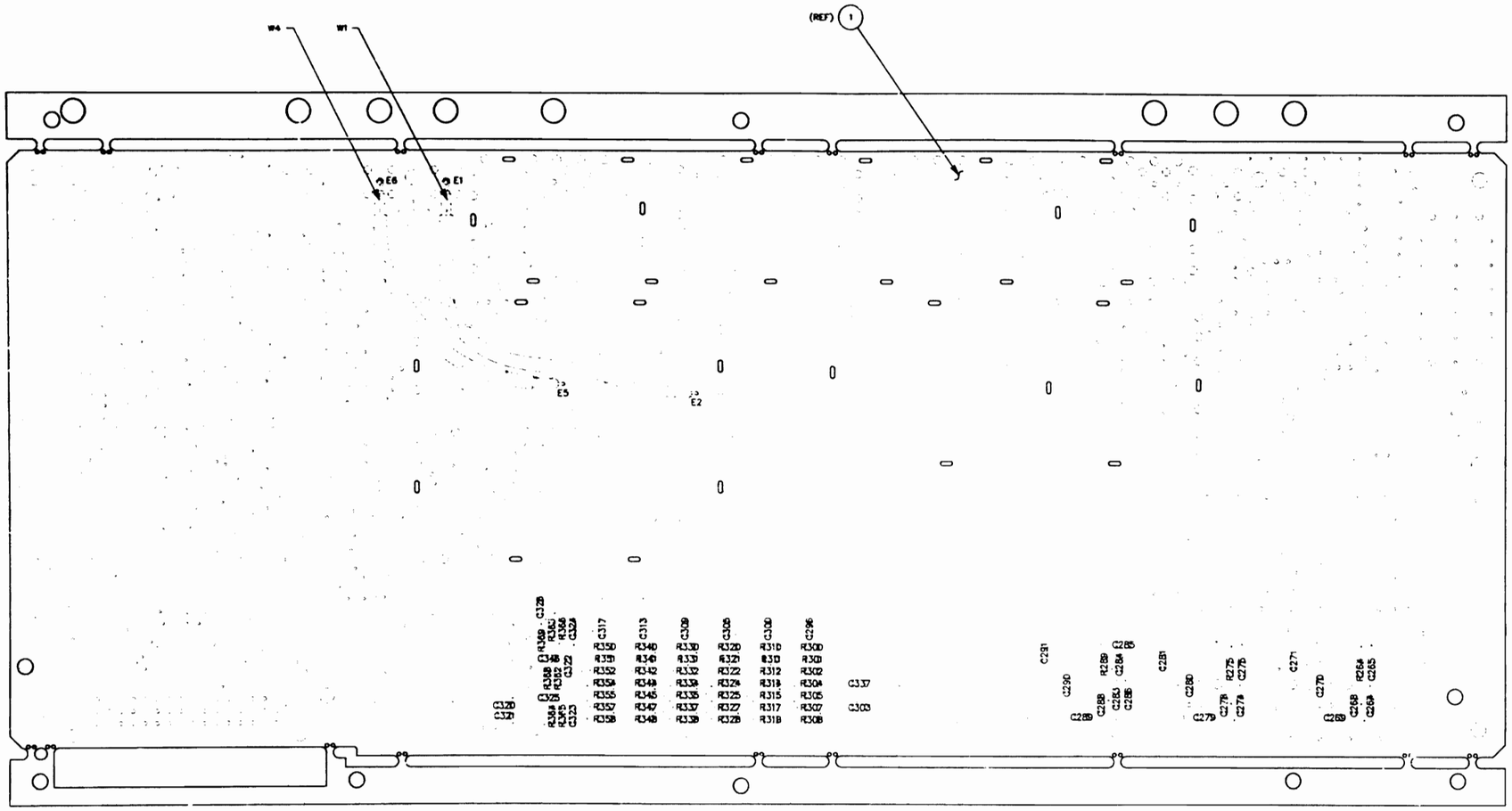

BOTTOM VIEW

DRAWN DATE: R. WEEKS 2-12-91	IFR SYSTEMS INC. 10200 West York St. Wichita, Kansas 67215
CHECKED DATE: M.BACHMAN 8-20-92	TITLE: ASSY DWG ANALYZER
APPROVED DATE: S.PIERSON 8-20-92	SIZE: D; DWG NO: 7010-8731-300; REV: K
108713-2.PLT	SCALE: N.T.S. DO NOT SCALE FSCM 51190 SHEET 2 of 3

DATE	REV	CHANGE	APVD
		SEE SHT 1	

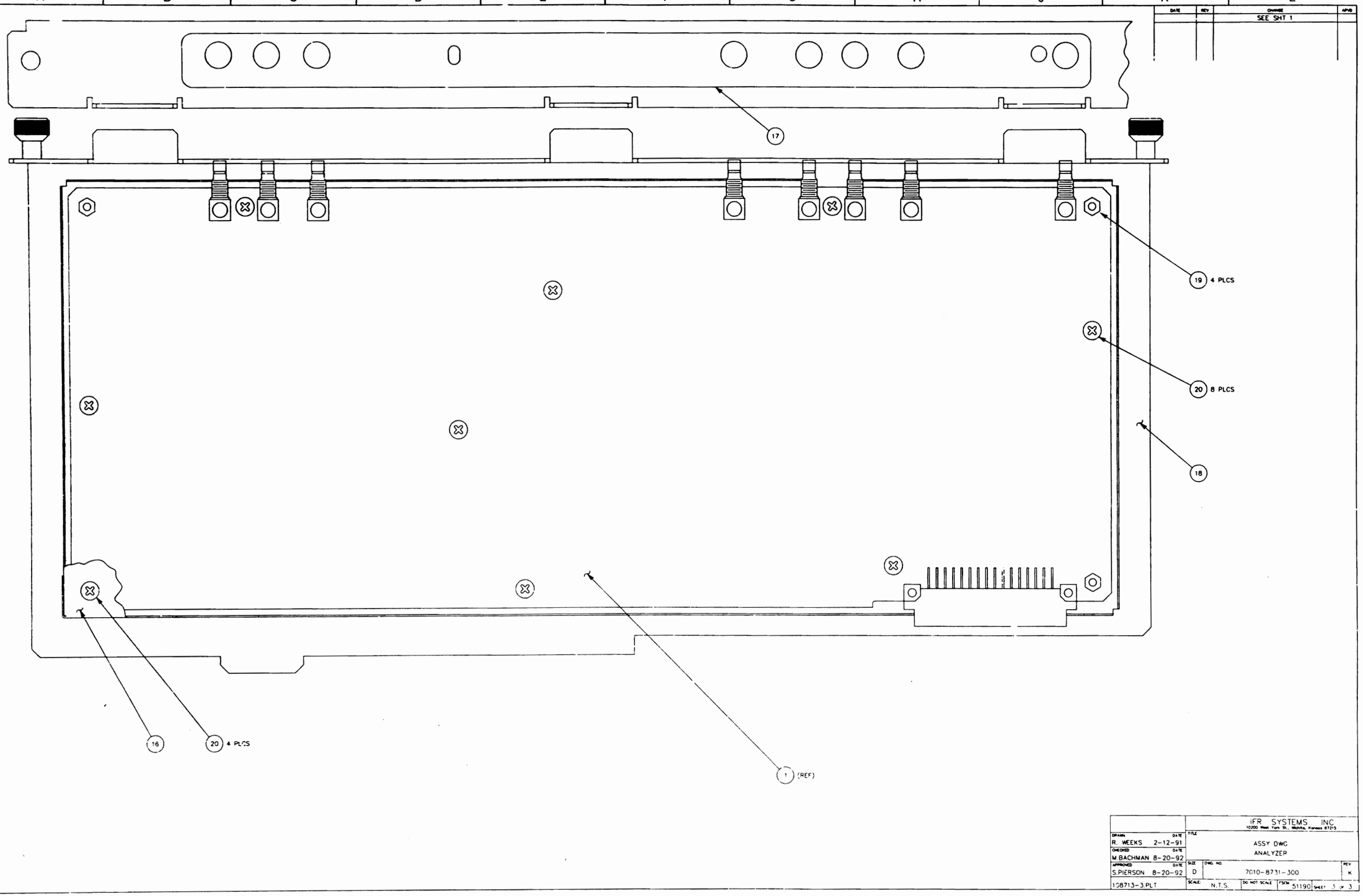

DRAWN R. WEEKS 2-12-91	TITLE	IFR SYSTEMS INC. 10200 West York St., Wichita, Kansas 67215
CHECKED M.BACHMAN 8-20-92		ASSY DWG ANALYZER
APPROVED S.PIERSON 8-20-92	SIZE D	DWG. NO. 7010-8731-300 REV K
138713-3.PLT	SCALE: N.T.S.	DO NOT SCALE FSCM 51190 SHEET 3 OF 3

Scans by ArtekMedia © 2008

Scans by ArtekMedia © 2008

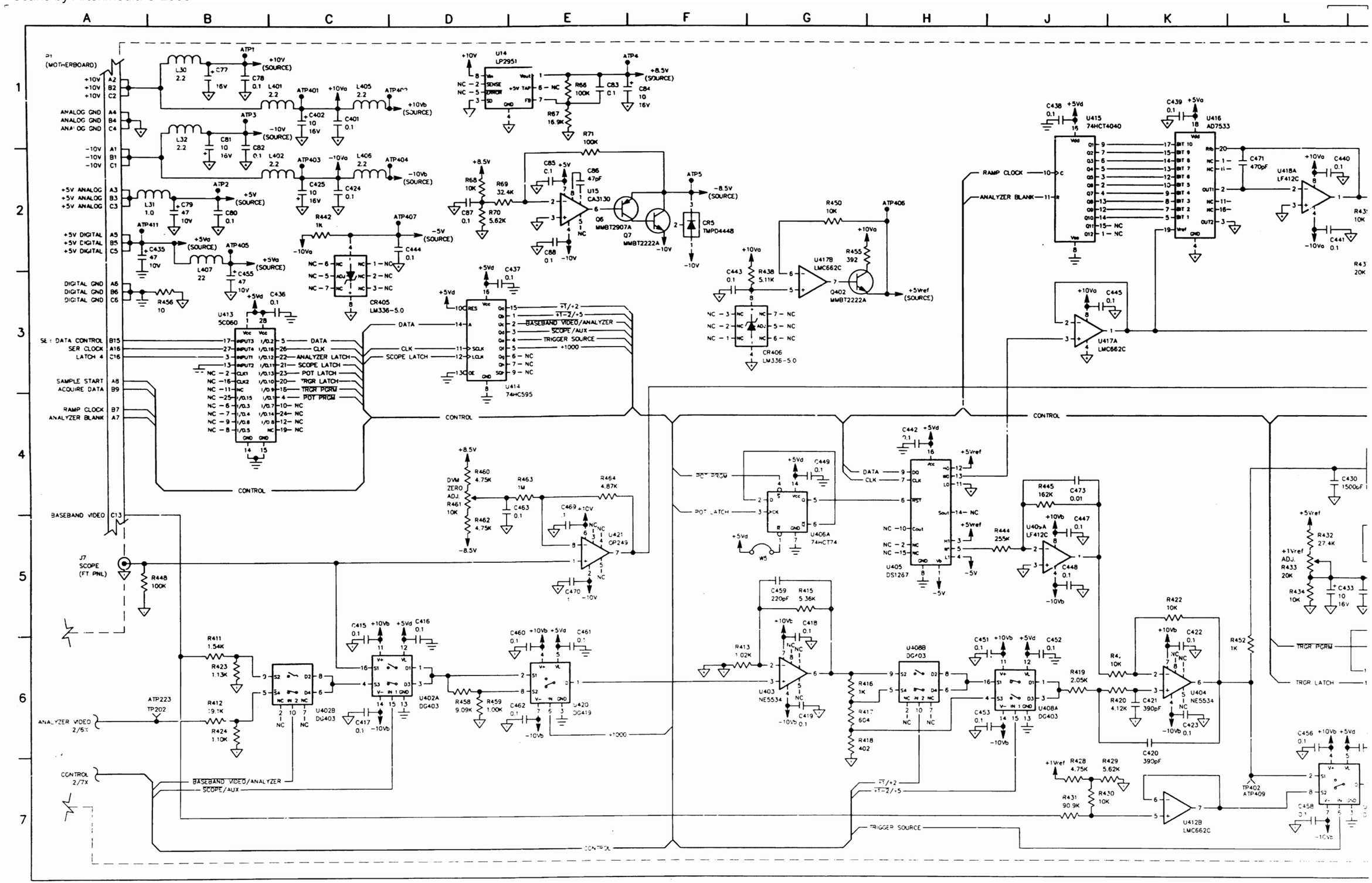

DATE	REV	CHANGE		APPROVED
		FOR PREVIOUS REV LEVELS SEE HISTORY		
8/10/95	G	INC ECN 16599	BP	BM
12/4/95	H	INC ECN 16807	BP	BM
2/29/96	J	INC ECN 16856	MKM	BM

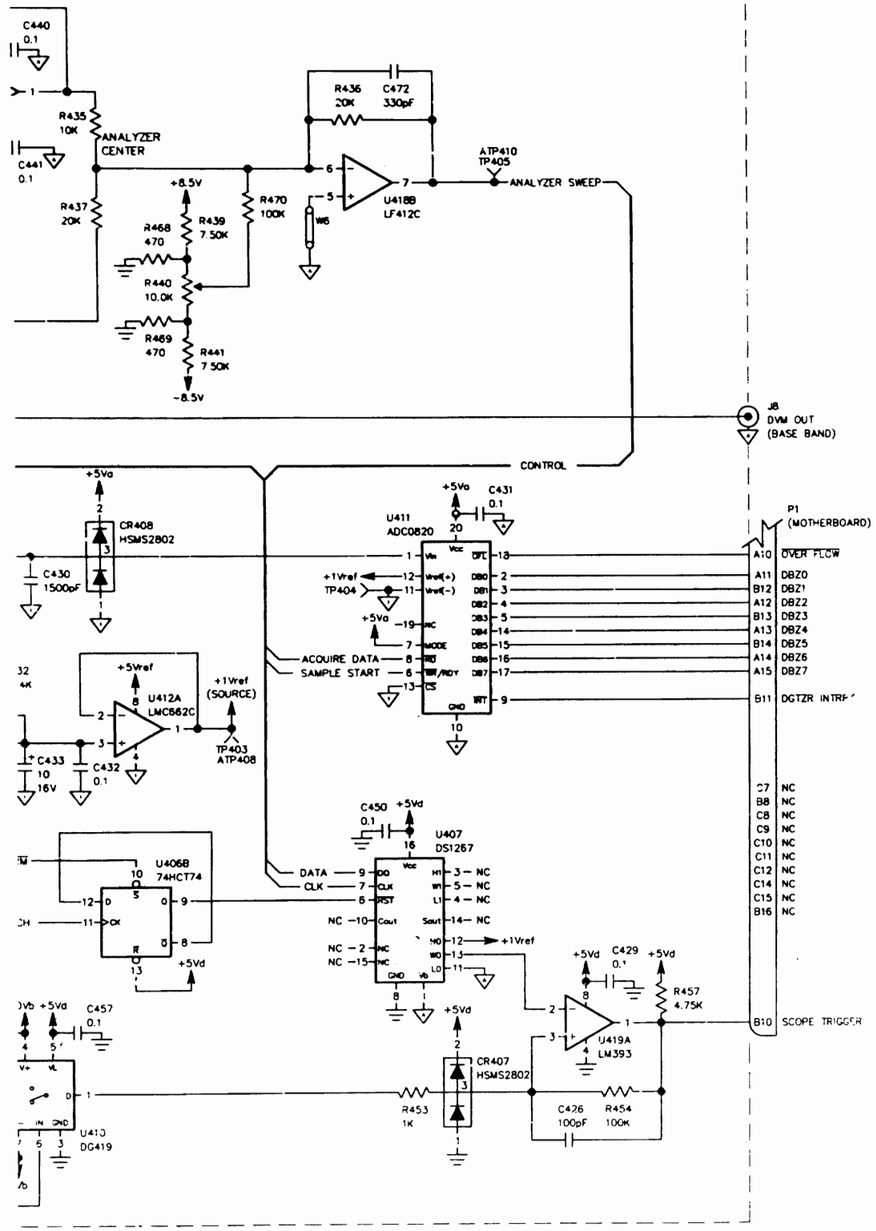

NOTES:
(UNLESS OTHERWISE SPECIFIED)

1. BASIC REFERENCE DESIGNATORS SHOWN. FOR COMPLETE DESIGNATOR PREFIXES REFER TO PRODUCT STRUCTURE, AND SYSTEM INTERCONNECT FOR APPLICATIONS WHERE USED.
2. ALL RESISTORS ARE 1 %, 1/8 W.
3. ALL RESISTANCE IS EXPRESSED IN OHMS.
   ALL CAPACITANCE IS EXPRESSED IN MICROFARADS.
   ALL INDUCTANCE IS EXPRESSED IN MICROHENRIES
4. HIGHEST REFERENCE DESIGNATIONS.
   C473 CR408 DS2 E10 FL208 J8 L407 MXR3 P1 Q402 R470
   S3 TP405 U421 W8 YFL208 ATP411
5. REFERENCE DESIGNATIONS NOT USED.
   C20-C26 C42 C65 C67 C119 C136-C204 C213 C214 C338
   C339 C345 C347 C349-C400 C403-C414 C427 C428 C434 C454
   C464-C468 CR1 CR10 CR12 CR15-CR199 CR215-CR404 FL1-FL201
   L18 L44-L201 L221-L400 L403 L404 Q20-Q199 Q233-Q401
   R13-R21 R25 R28 R32 R122-R205 R386 R387 R395 R396 R399-R410
   R414 R425-R427 R443 R448 R447 R449 R451 R465-R467
   TP6-TP199 TP203-TP401 ATP9-ATP200 ATP224-ATP400
   U3 U23-U201 U206-U401 YFL1-YFL199
6. IC FUNCTIONS NOT USED:

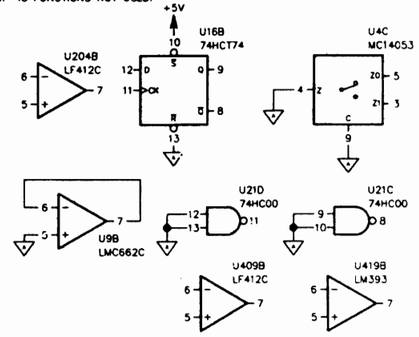

7. SELECT AT TEST VALUES FOR WDE BAND ATTENUATOR. NOMINAL VALUE IS 6dB.

ATTENUATION	R208	R209	R210	R211
3dB	18.2	NOT INSTALLED	301	301
4dB	24.3	NOT INSTALLED	221	221
5dB	30.1	NOT INSTALLED	182	182
6dB	36.5	NOT INSTALLED	150	150
7dB	45.3	NOT INSTALLED	131	131
8dB	51.1	NOT INSTALLED	116	116

8. YFL206, YFL207, YFL208, ARE MATCHED PAIRS. THE ORDER AND ORIENTATION IS IMPORTANT. DO NOT BREAK UP SETS. "A" PART IS MARKED WITH A BLACK DOT ON PIN #1 (INPUT SIDE). "B" PART IS MARKED WITH A RED DOT ON PIN #1.
9. FOR INTERCONNECT/BLOCK DIAGRAM SEE APPLICATIONS WHERE USED.

CAUTION:
CONTAINS PARTS AND ASSEMBLIES SUSCEPTIBLE TO DAMAGE BY ELECTROSTATIC DISCHARGE (ESD).

DRAWN	DATE	IFR SYSTEMS, INC.	
R.JONES	12-19-91	TITLE: CIRCUIT SCHEMATIC ANALYZER	
CHECKED	DATE		
DEB B.	8-20-92	SIZE: D	DWG NO: 0000-8731-300
APPROVED	DATE		REV: J
S. PIERSON	8-20-92	SCALE: DO NOT SCALE	SHEET 1 OF 8
087B313.DWG			

Scans by ArtekMedia © 2008

Scans by ArtekMedia © 2008

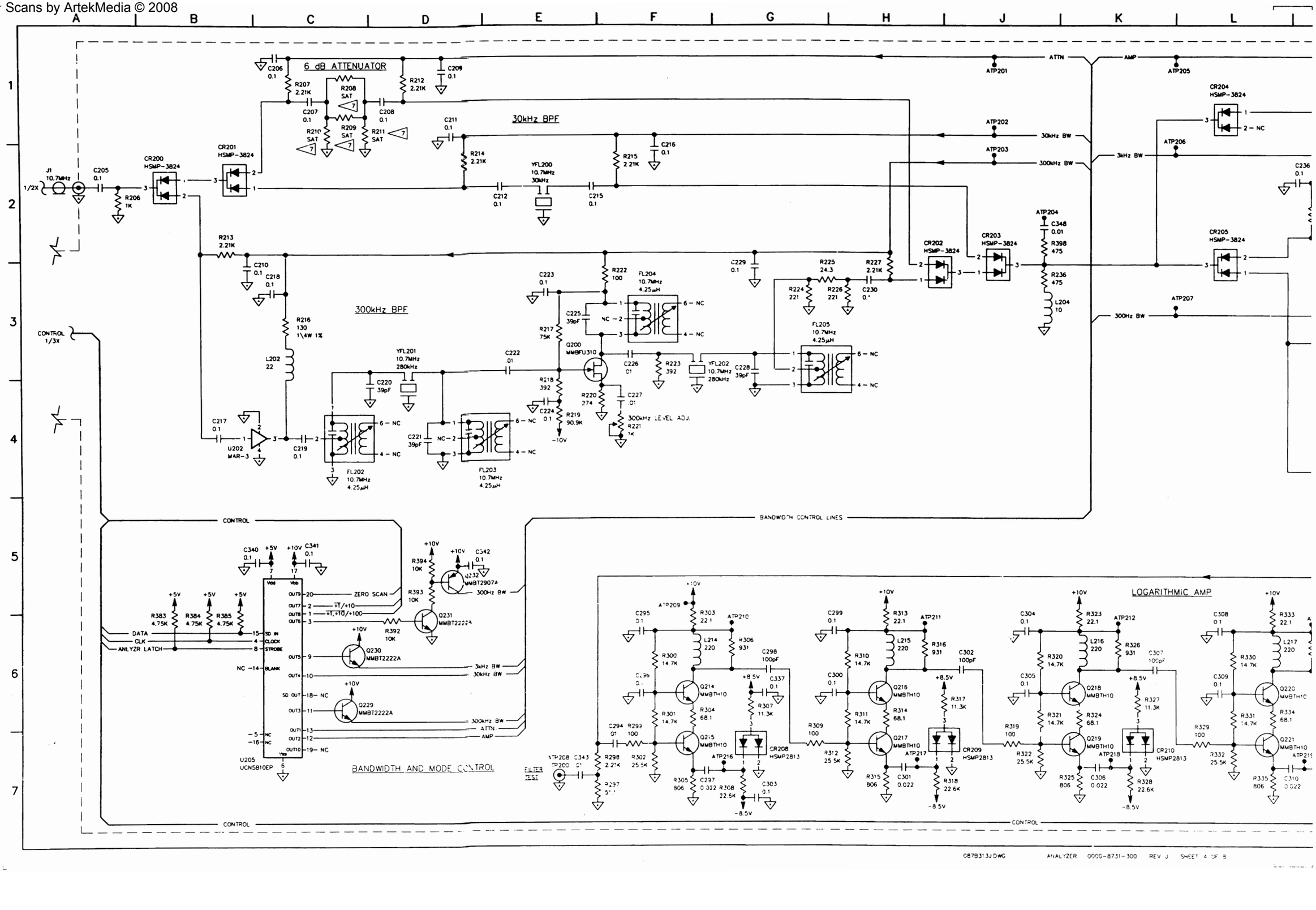

BROADBAND AMP

3kHz BPF

300Hz BPF

AM DETECTOR

OUTPUT AMP

ANALYZER VIDEO 3/6A

CONTROL 3/7A

Scans by ArtekMedia © 2008

Scans by ArtekMedia © 2008

A B C D E F G H J K L

1 2 3 4 5 6 7

J5 3rd LO (SYN TRAY)

J4 90MHz (RCVR TRAY)

J2 1 MHz (REF FREQ)

89MHz BPF

1st MIXER

SWEEP SCALING

SAMPLE & HOLD INTEGRATOR

Ø DETECTOR

SWEEP VCO (116.3–128.3MHz)

3rd MIXER

SQUARING AMP

÷ 44

Ø DETECTOR

SHIELD

CONTROL

BLANKING

ANALYZER SWEEP

SWEEP LOCK

ANALYZER
PCBD 7700-8721-300
PCBD ASSY 7010-8731-300

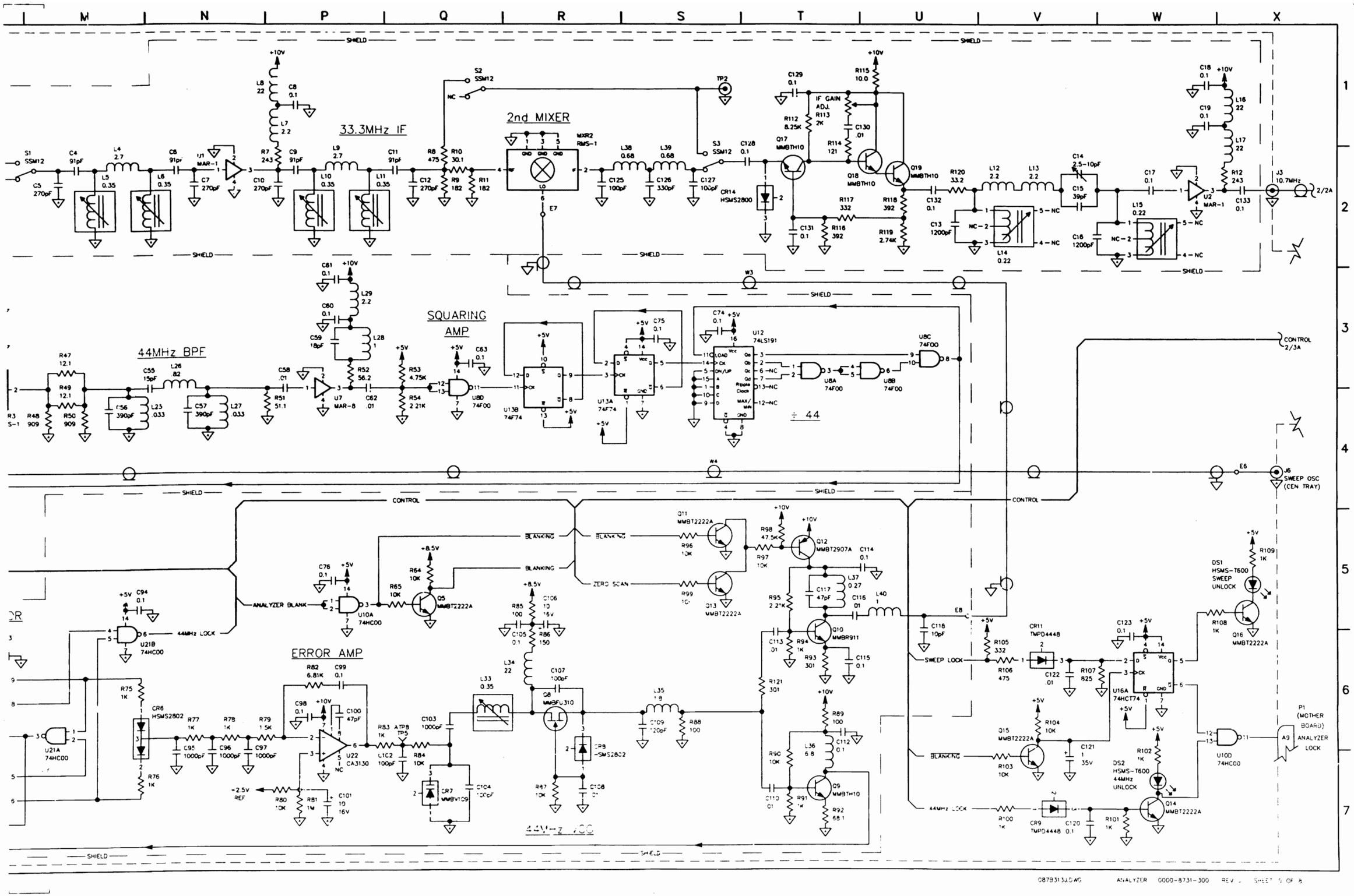

Scans by ArtekMedia © 2008

Scans by ArtekMedia © 2008

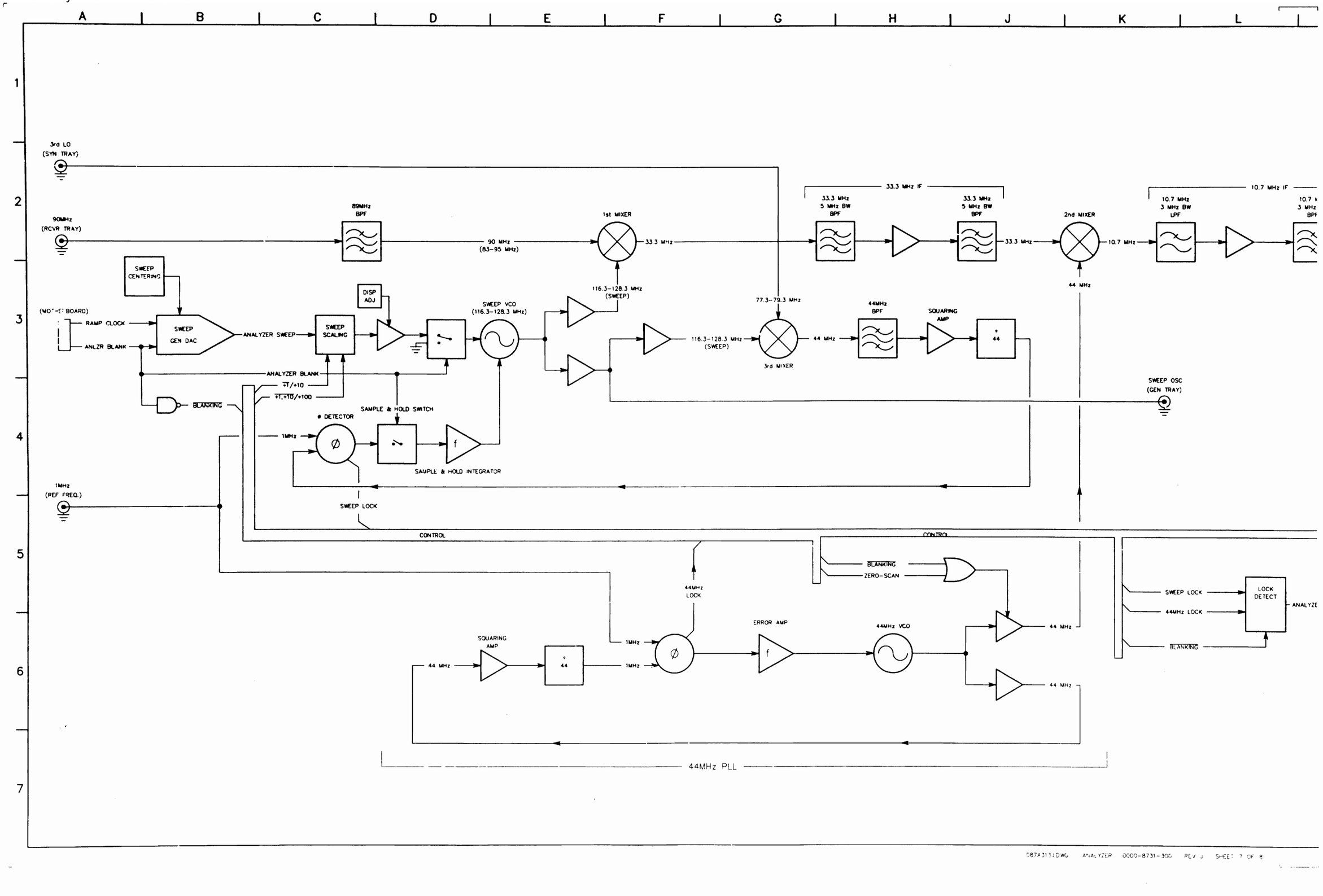

M N P Q R S T U V W X

1 2 3 4 5 6 7

IF

10.7 MHz 3 MHz BW BPF

IF GAIN ADJ

10.7MHz

DIODE SWITCH

WIDE BAND ATTENUATOR

30kHz BANDPASS

300kHz BANDPASS

300kHz LEVEL ADJ

ATTN

30kHz BW

300kHz BW

DIODE SWITCH

AMP

BROADBAND AMP

DIODE SWITCH

3kHz BANDPASS

300kHz LEVEL ADJ

3kHz BW

300Hz BANDPASS

300kHz LEVEL ADJ

300Hz BW

DIODE SWITCH

LOGARITHMIC AMP

AM DETECTOR

OUTPUT SCALING AMP

ANALYZER VIDEO

ANALYZER VIDEO GAIN & OFFSET ADJ

BANDWIDTH SELECT LINES

DATA

CLK

ANALYZER LATCH

BANDWIDTH SELECT

÷1/÷10

÷1,÷10/÷100

ZERO-SCAN

(MOTHERBOARD)

ANALYZER-LOCK

(MOTHERBOARD)

SER DATA (CONTROL)

SER CLOCK

LATCH 4

PAL INTERFACE

DATA

CLK

DATA

CLK

SCOPE LATCH

SCOPE CONTROL

SCOPE (FRNT PNL)

VIDEO SOURCE SELECTOR

+1/+10 SCALING

A=6

+1/+2/+5 SCALING

POT PROM

POT LATCH

DATA

CLK

VERTICAL OFFSET

100kHz ACTIVE LPF (A=2)

TRIGGER LEVEL

TRIGGER SOURCE SELECT

SCOPE TRIGGER

(MOTHERBOARD)

BASEBAND VIDEO

DVM OUT (BASE BAND)

(MOTHERBOARD)

ACQUIRE DATA

SAMPLE START

D/A CONVERTER

OVERFLOW

DB20-7

087A313J.DWG ANALYZER 0000-8731-300 REV J SHEET 8 OF 9

Scans by ArtekMedia © 2008

Scans by ArtekMedia © 2008

DATE	REV	CHANGE	APVD
04/10/95	A	RELEASE PER ECN 16824RH	DC

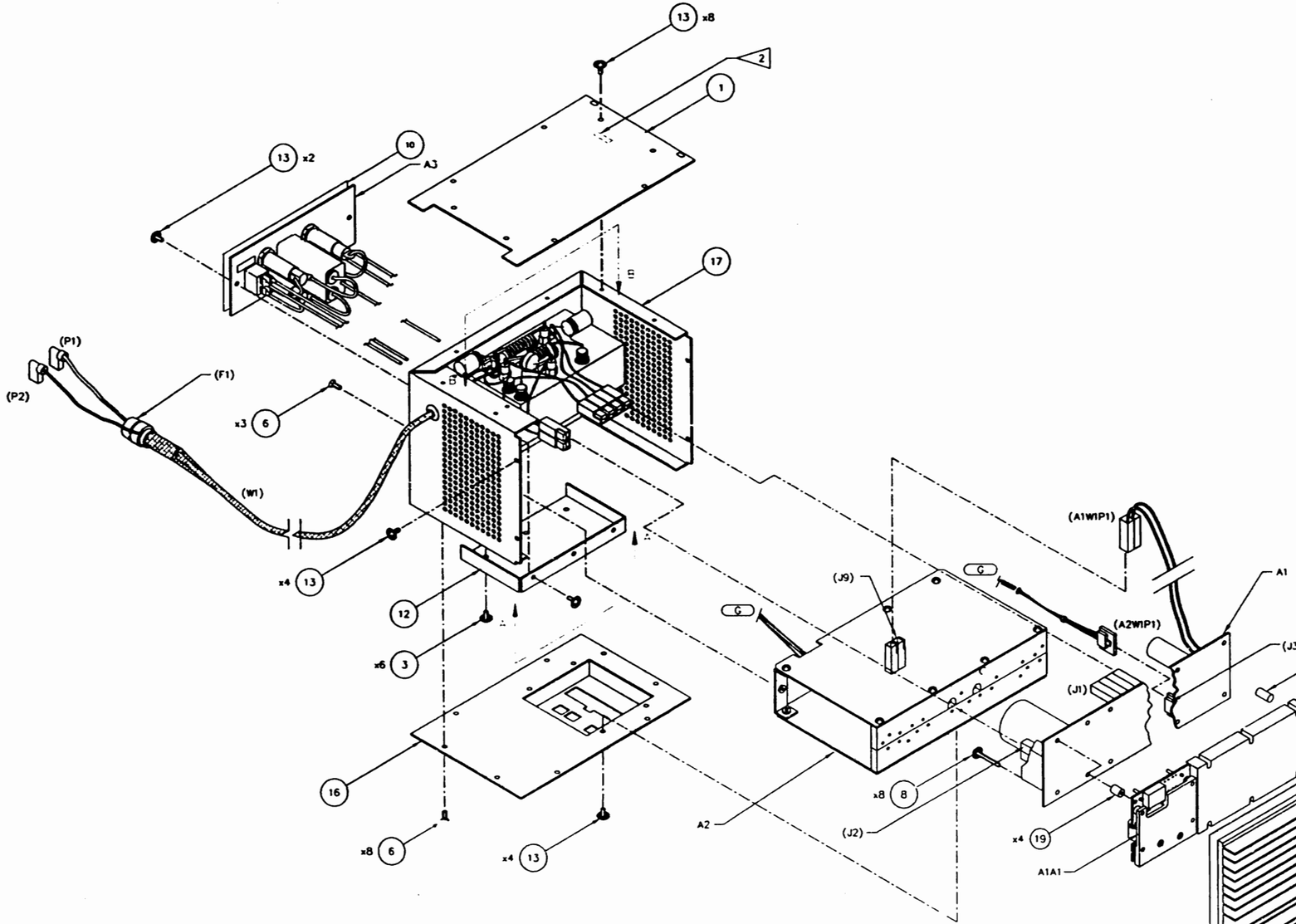

NOTES:

1. BASIC REFERENCE DESIGNATORS SHOWN, FOR COMPLETE DESIGNATOR PREFIXES REFER TO PRODUCT STRUCTURE, AND SYSTEM INTERCONNECT FOR APPLICATIONS WHERE USED.

2. AFFIX MODULE IDENT LABEL HERE

3. CRITICAL, MINIMUM CLEARANCE:
   BODY OF RT1 TO CHASSIS ≥ 120"
   BARE LEAD OF R11 TO BODY OF FL2 ≥ 120"
   BARE LEAD OF C2 TO BODY OF FL1 ≥ 050"

   SECURE C2,C3, & RT1 WITH ITEM (18) RTV.

CAUTION:
CONTAINS PARTS AND ASSEMBLIES SUSCEPTIBLE TO DAMAGE BY ELECTROSTATIC DISCHARGE (ESD)

"THIS DOCUMENT CONTAINS PROPRIETARY INFORMATION OF IFR, INC. AND IS NOT TO BE DISCLOSED, REPRODUCED, OR PUBLISHED WITHOUT IFR'S APPROVAL"

IFR SYSTEMS INC
10200 West York St., Wichita, Kansas 67215

DRAWN HARRIS 12/1/95	TITLE	MECH ASSY, PWR SUPPLY COM 120B
CHECKED M.BRUFFETT 1/16/96		
APPROVED M.BACHMAN 1/23/96	SIZE D	DWG NO 7005-0642-200 REV A
006422A0.DWG	PLOT SCALE 5=1	SCALE 1=1 CAGE 51190 SHEET 1 OF 2

DATE	REV	CHANGE	APVD
		SEE SHEET 1	

VIEW "B-B"

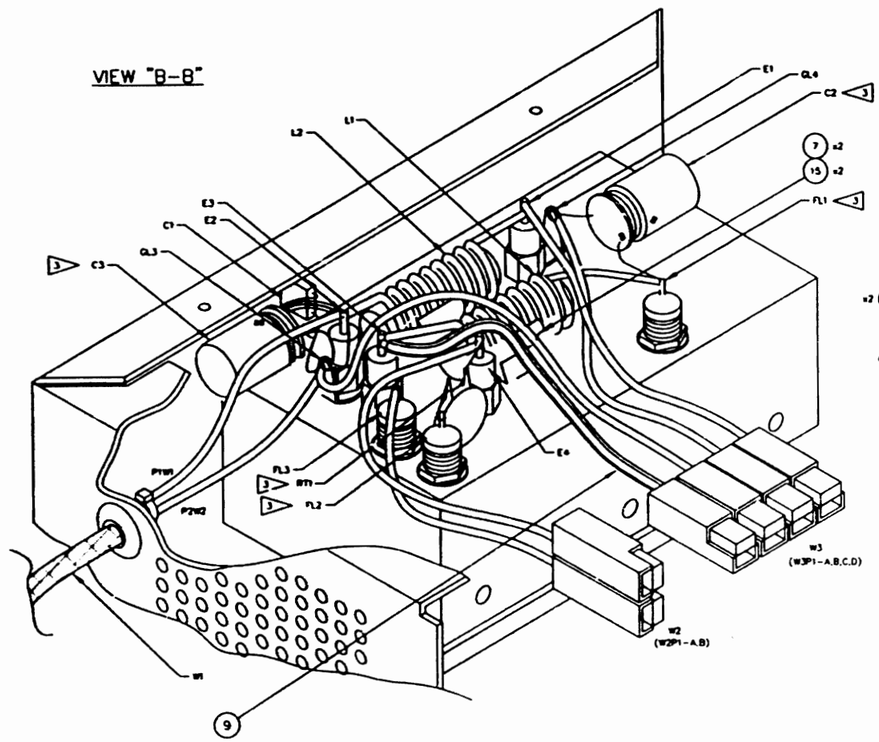

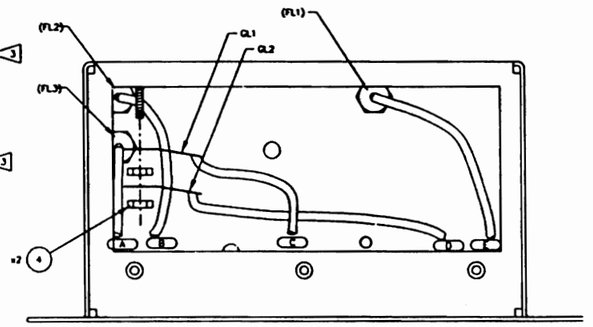

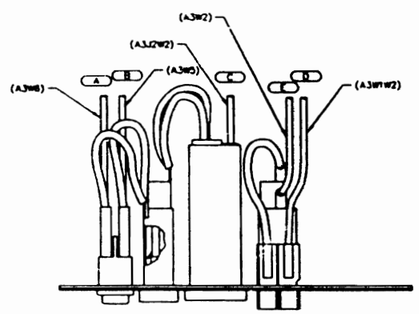

VIEW "A-A"

WIRE RUNNING LIST

DESG	FROM	TO	COLOR	AWG

Scans by ArtekMedia © 2008

DATE	REV	CHANGE	APPROVED
3-19-96	A	RELEASE PER ECN #16824 J.I.M.	DKB

NOTES:
(UNLESS OTHERWISE SPECIFIED)

1. BASIC REFERENCE DESIGNATORS SHOWN. FOR COMPLETE DESIGNATOR PREFIXES REFER TO PRODUCT STRUCTURE AND SYSTEM INTERCONNECT FOR APPLICATIONS WHERE USED.
2. ALL RESISTORS ARE 5%. 1/4W.
3. ALL RESISTANCE IS EXPRESSED IN OHMS.
   ALL CAPACITANCE IS EXPRESSED IN MICROFARADS.
   ALL INDUCTANCE IS EXPRESSED IN MICROHENRIES.
4. HIGHEST REFERENCE DESIGNATIONS:

   ! C3 ! E4 ! F1 ! FL3 ! GL4 ! L2 ! W3 ! RT1 ! A3 !

5. REFERENCE DESIGNATIONS NOT USED: NONE
6. FOR INTERCONNECT/BLOCK DIAGRAM SEE APPLICATIONS WHERE USED.
7. IC FUNCTIONS NOT USED: NONE

*- INDICATES PRINTED TRANSMISSION LINES OF OTHER THAN 50 OHMS IMPEDANCE WHICH CONSTITUTE CIRCUIT ELEMENTS. 50 OHM TRANSMISSION LINES ARE NOT SHOWN.

CAUTION:
CONTAINS PARTS AND ASSEMBLIES SUSCEPTIBLE TO DAMAGE BY ELECTROSTATIC DISCHARGE (ESD).

DRAWN J. MILLER	3-7-94	IFR SYSTEMS, INC. 10200 W YORK STREET WICHITA, KS 67215-8935
CHECKED DKB	4-4-95	Title INTERCONNECT POWER SUPPLY COM-120 B
APPROVED S. PIERSON	4-6-95	Size C · Document Number 0000-0542-[illegible] · REV A · Date March 19, 1996 · Sheet 1 of 3

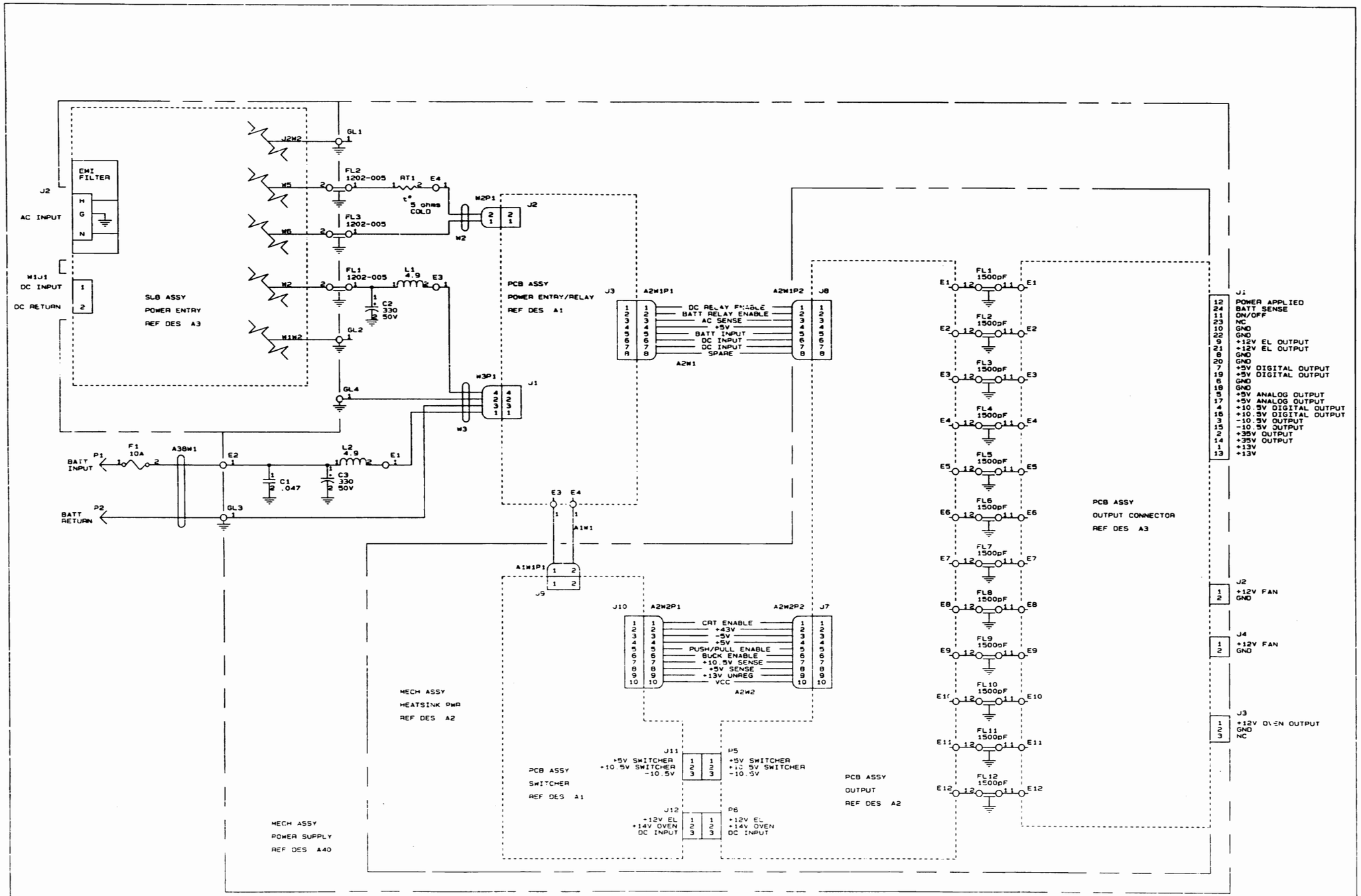

Scans by ArtekMedia © 2008

Scans by ArtekMedia © 2008

DATE	REV	CHANGE	APVD
		FOR PREVIOUS REV LEVELS SEE HISTORY	
7/6/95	F	INC ECN 16555 BP	BM

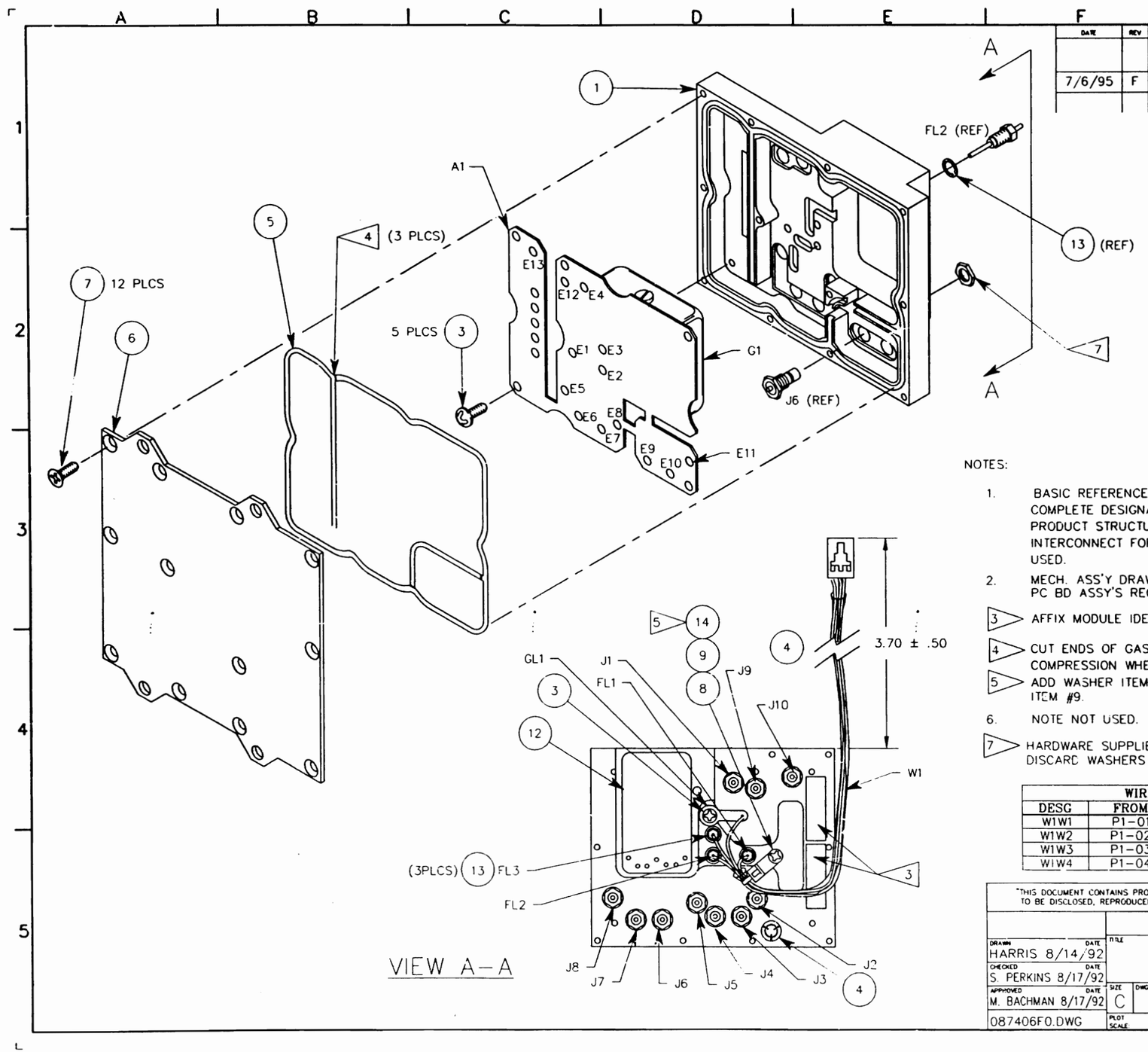

NOTES:

1. BASIC REFERENCE DESIGNATORS SHOWN, FOR COMPLETE DESIGNATOR PREFIXES REFER TO PRODUCT STRUCTURE, AND SYSTEM INTERCONNECT FOR APPLICATIONS WHERE USED.
2. MECH. ASS'Y DRAWING SHOWS ONLY PORTIONS OF PC BD ASSY'S REQUIRED FOR REF. ONLY.

3 AFFIX MODULE IDENTIFICATION LABELS HERE.

4 CUT ENDS OF GASKET MUST MEET UNDER COMPRESSION WHEN INSTALLED.

5 ADD WASHER ITEM #14 BETWEEN ITEM #8 AND ITEM #9.

6. NOTE NOT USED.

7 HARDWARE SUPPLIED WITH CONNECTORS, DISCARD WASHERS

WIRE RUNNING LIST

DESG	FROM	TO	COLOR	AWG
W1W1	P1–01	FL1	BLUE	26
W1W2	P1–02	FL2	RED	26
W1W3	P1–03	FL3	YELLOW	26
W1W4	P1–04	GL1	BLACK	26

"THIS DOCUMENT CONTAINS PROPRIETARY INFORMATION OF IFR, INC. AND IS NOT TO BE DISCLOSED, REPRODUCED, OR PUBLISHED WITHOUT IFR'S APPROVAL."

IFR SYSTEMS INC.
10200 West York St., Wichita, Kansas 67215

DRAWN DATE	HARRIS 8/14/92
CHECKED DATE	S. PERKINS 8/17/92
APPROVED DATE	M. BACHMAN 8/17/92
087406F0.DWG	

TITLE: MECH ASSY, REFERENCE FREQ. STD.

SIZE C | DWG NO. 7005-8740-600 | REV F

PLOT SCALE 1=1 | SCALE 1=1 | CAGE 51190 | SHEET 1 OF 1

DATE	REV	CHANGE	APVD
8/20/92	C	DESIGN RELEASE RH	DKB
5/4/93	C1	PROD REL PER ECN 15564 RH	DKB
7/6/95	D	INC ECN 16555 BP	BM

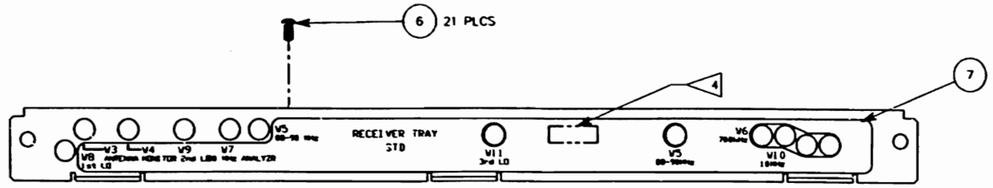

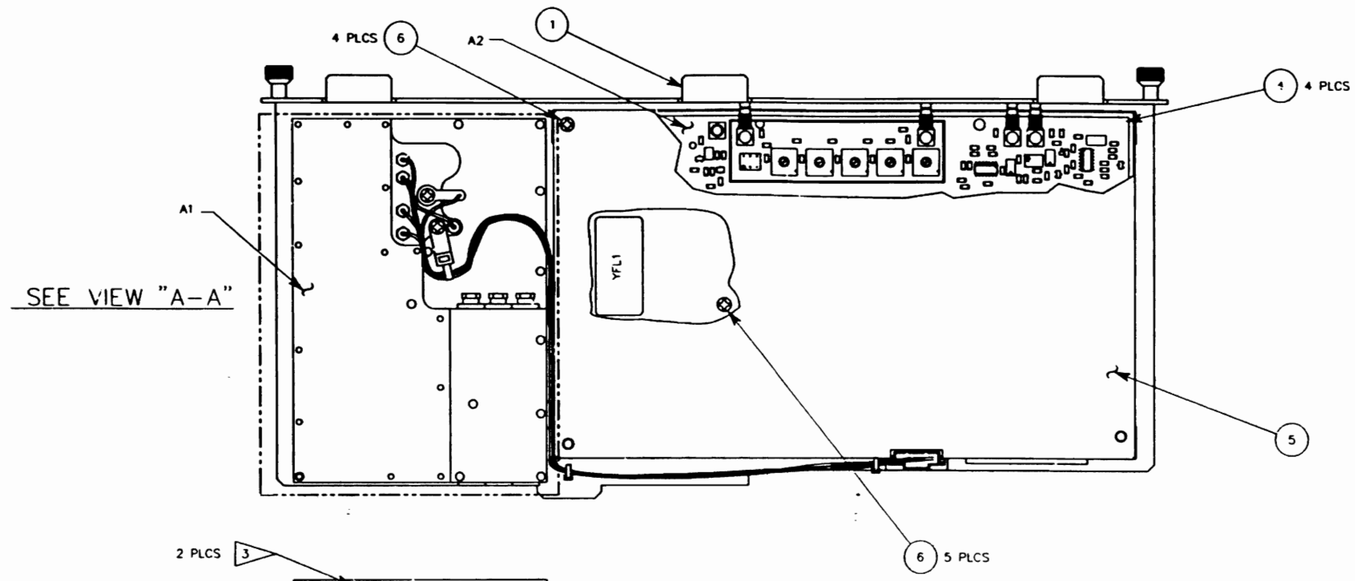

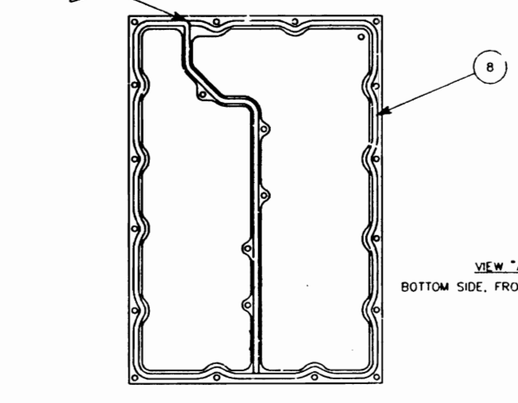

VIEW "A-A"
BOTTOM SIDE, FRONT END MODULE

NOTES:

1. BASIC REFERENCE DESIGNATORS SHOWN, FOR COMPLETE DESIGNATOR PREFIXES REFER TO PRODUCT STRUCTURE, AND SYSTEM INTERCONNECT FOR APPLICATIONS WHERE USED.
2. REFERENCE INTERCONNECT: 0000-8740-400
3. CUT ENDS OF GASKET MUST MEET UNDER COMPRESSION WHEN INSTALLED.
4. AFFIX MODULE I.D. LABEL HERE.

CAUTION:
CONTAINS PARTS AND ASSEMBLIES SUSCEPTIBLE TO DAMAGE BY ELECTROSTATIC DISCHARGE (ESD)

"THIS DOCUMENT CONTAINS PROPRIETARY INFORMATION OF IFR, INC. AND IS NOT TO BE DISCLOSED, REPRODUCED, OR PUBLISHED WITHOUT IFR'S APPROVAL."

IFR SYSTEMS INC

DRAWN HARRIS 7/18/92	TITLE	MECH ASSY, RECEIVER TRAY STD	
CHECKED S. PERKINS 8/10/92			
APPROVED M. BACHMAN 8/20/92	SIZE D	DWG NO 7005-8740-400	REV D
08740400.DWG	PLOT SCALE 1=1	SCALE 1=1	CAGE 51190 SHEET 1 of 1

Scans by ArtekMedia © 2008

Scans by ArtekMedia © 2008

DATE	REV	CHANGE		APPROVED
8-20-92	C	DESIGN RELEASE	J.L.M.	DKB
DATE	REV	CHANGE		APPROVED
4-29-93	C1	PROD. REL. PER ECN #15564	J.L.M.	DKB
08-24-93	C2	INC ECN #15769	BP	BM
07-12-95	D	INC ECN #16555	BP	BM

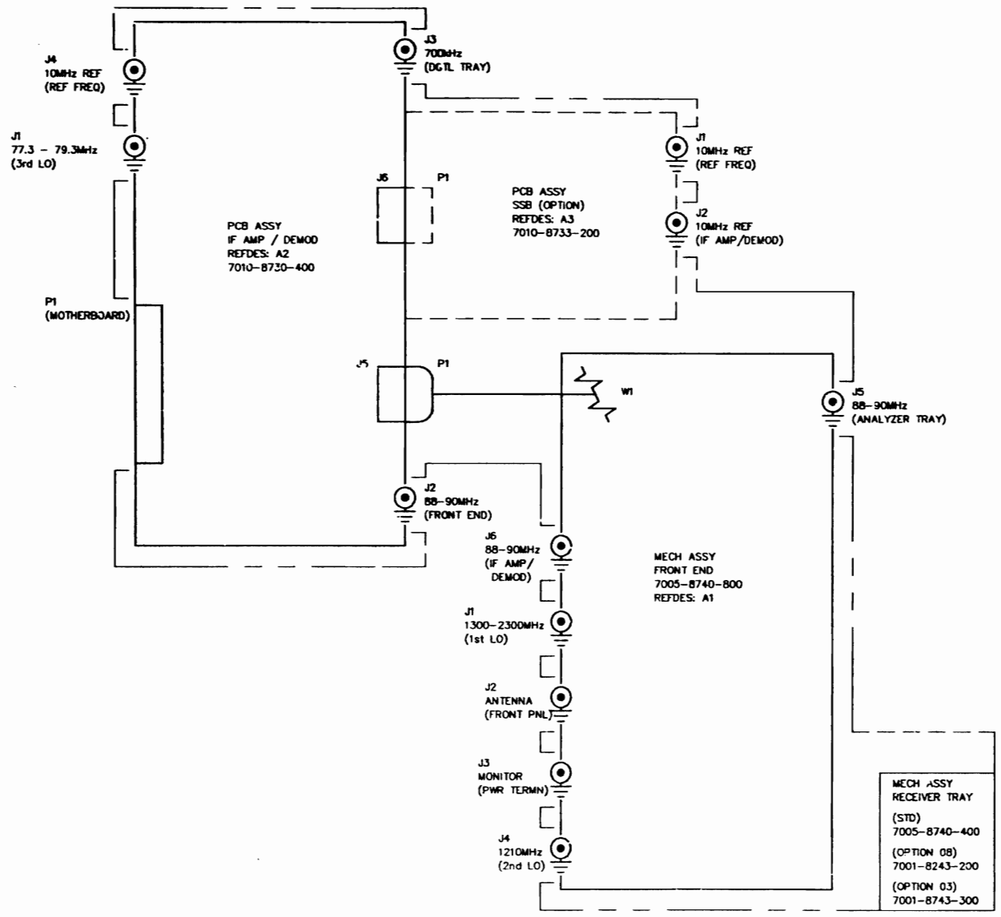

DRAWN J. MILLER 6-23-92	IFR SYSTEMS INC. 10200 West York St., Wichita, Kansas 67215
CHECKED E. SHIMONI 8-20-92	TITLE INTERCONNECT RECEIVER TRAY
APPROVED S. PIERSON 8-20-92	SIZE D / DWG. NO. 0000-8740-400 / REV D
087B4040.DWG	SCALE: DO NOT SCALE / FSCM 51190 / SHEET 1 OF 1

DATE	REV	CHANGE	APVD
9/22/92	D1	DESIGN RELEASE RH	DKB
10/30/92	D2	INC FMY-050	DKB
1/4/93	D3	INC FMY-095 RH	DKB
5/5/93	D4	PROD REL PER ECN 15564 RH	DKB
08/23/93	D5	PRODUCT EQUAL TO D6	
11/17/93	D6	INC ECN 15769 & 15769A BP	BM

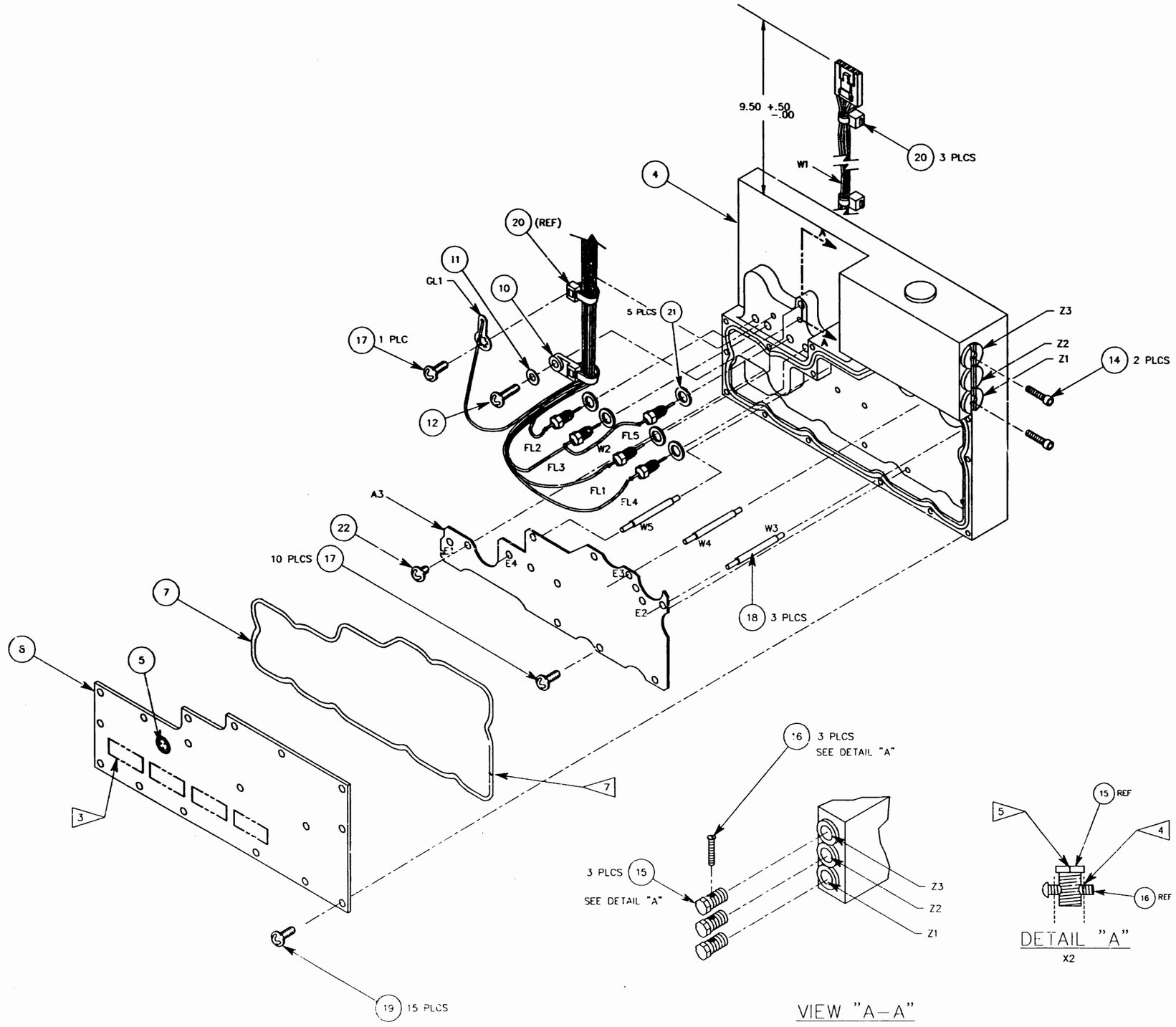

NOTES:

1. BASIC REFERENCE DESIGNATORS SHOWN, FOR COMPLETE DESIGNATOR PREFIXES REFER TO PRODUCT STRUCTURE, AND SYSTEM INTERCONNECT FOR APPLICATIONS WHERE USED.
2. MECH. ASS'Y DRAWING SHOWS ONLY PORTIONS OF PC BD ASSY'S REQUIRED FOR REF. ONLY.

3 AFFIX MODULE IDENTIFICATION LABEL HERE.

4 THREAD NYLON SCREW INTO SLUG UNTIL THREADS ARE EXTENDING PAST SLUG ABOUT EQUAL DISTANCE, CUT OFF BOTH ENDS OF SCREW FLUSH TO SLUG THREADS.

5 SCREW ITEM 6 INTO BLOCK HALF THE LENGTH OF THREADED AREA ONLY.

6 PINS ARE TO BE FULLY INSERTED INTO TUNING POLE. CUT OFF EXCESS AFTER SOLDERED.

7 CUT ENDS OF GASKET MUST MEET UNDER COMPRESSION WHEN INSTALLED.

WIRE RUNNING LIST

DESG	FROM	TO	COLOR	AWG
W1W1	P1-01	FL4	BLUE	26
W1W2	P1-02	FL2	GRN	26
W1W3	P1-03	FL3	RED	26
W1W4	P1-04	GL1	BLK	26
W1W5	P1-05	FL1	BRN	26
W2	FL3	FL5	RED	26
W3	E2	E7	BUS	26
W4	E3	E8	BUS	26
W5	E4	E10	BUS	26

CAUTION:
CONTAINS PARTS AND ASSEMBLIES SUSCEPTIBLE TO DAMAGE BY ELECTROSTATIC DISCHARGE (ESD).

IFR SYSTEMS INC
10200 West York St., Wichita, Kansas 67215

DRAWN / DATE	HARRIS 5/12/92
CHECKED / DATE	S.PERKINS 8/17/92
APPROVED / DATE	M.BACHMAN 9/22/92
TITLE	MECH ASSY, FRONT END BLOCK
SIZE	D
DWG. NO.	7005-8740-800
REV	D6
087408D6.DWG	PLOT SCALE: 1=1
SCALE	1=1
CAGE	51190
SHEET	1 OF 2

Scans by ArtekMedia © 2008

Scans by ArtekMedia © 2008

DATE	REV	CHANGE	APVD
		SEE SHEET 1	

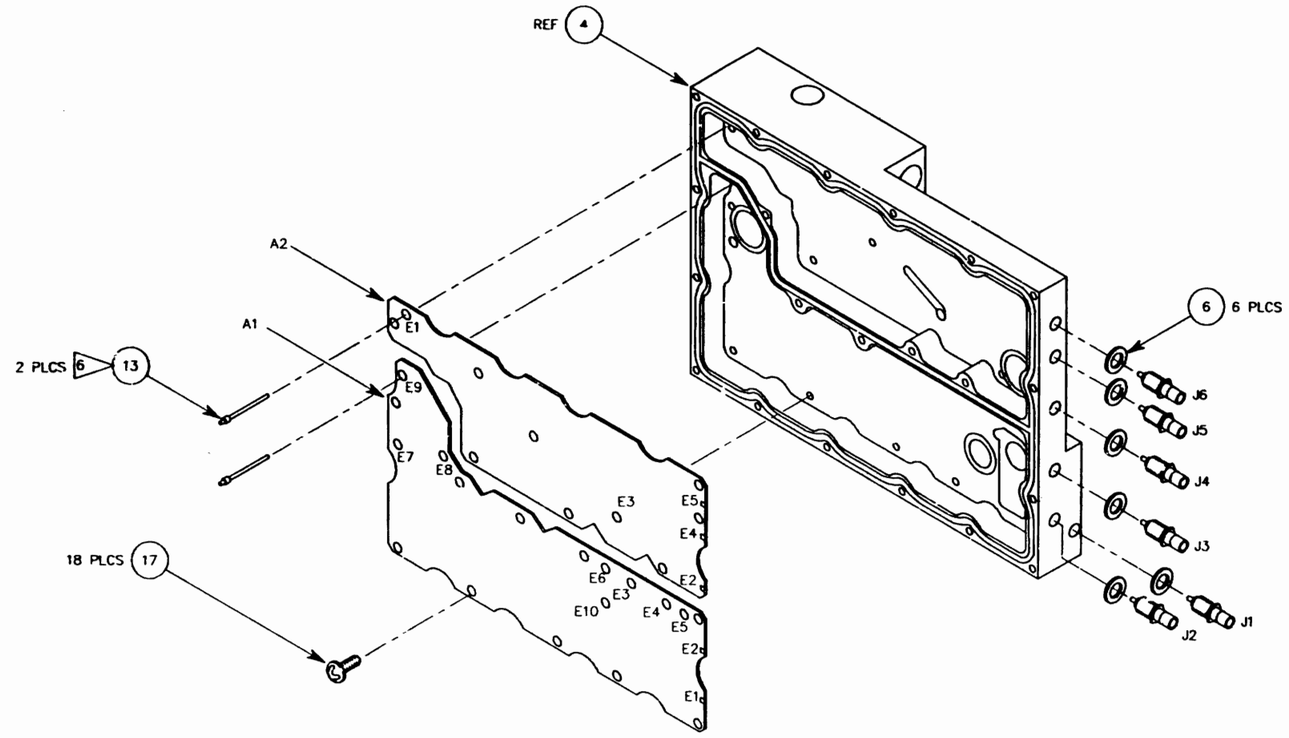

SEE SHEET 1 FOR NOTES.

CAUTION:
CONTAINS PARTS AND ASSEMBLIES SUSCEPTIBLE TO DAMAGE BY ELECTROSTATIC DISCHARGE (ESD).

	IFR SYSTEMS INC 10200 West York St., Wichita, Kansas 67215	
DRAWN HARRIS 5/9/92	TITLE MECH ASSY FRONT END	
CHECKED S.PERKINS 8/17/92		
APPROVED M.BACHMAN 9/22/92	SIZE D	DWG. NO. 7005-8740-800 REV D6
078408-2.DWG	PLOT SCALE 1=1	SCALE 1=1 CAGE 51190 SHEET 2 OF 2

DATE	REV	CHANGE	APVD
8-20-92	C1	DESIGN RELEASE	DKB
10-7-92	C2	INC FMY-020	DKB
11-17-92	C3	INC FMY-062	DKB
11-18-92	C4	INC FMY-063	DKB
12-2-92	C5	INC FMY-077 CJW	DKB
1-13-93	C6	INC FMY-098 RLA	DKB
4-29-93	C7	PROD. REL. PER ECN15564 RRW	DKB
10-29-93	C8	INC ECN #15778 J.I.M.	BM
4-22-94	C9	INC ECN #16104 MKM	BM
11-1-94	D	INC ECN #16308 MKM	BM
7/12/95	E	INC ECN #16555 BP	BM
8/10/95	F	INC ECN #16615 BP	BM

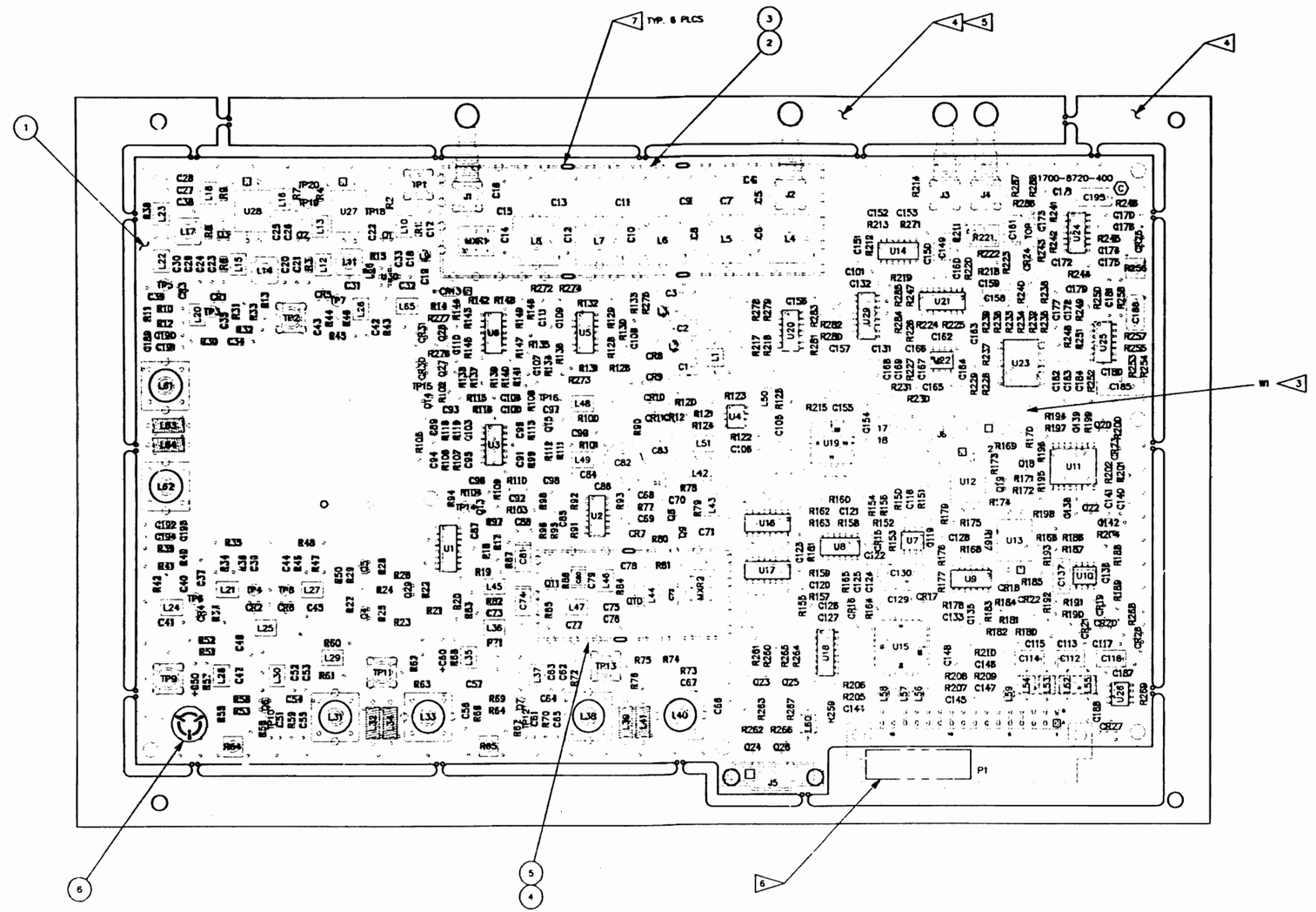

NOTES:

1. BASIC REFERENCE DESIGNATORS SHOWN, FOR COMPLETE DESIGNATOR PREFIXES REFER TO PRODUCT STRUCTURE, AND SYSTEM INTERCONNECT FOR APPLICATIONS WHERE USED.
2. NOTE NOT USED

3 TO BE INSTALLED ON BOTTOM SIDE ONLY.

4 TO BE REMOVED PRIOR TO MECH. ASSY.

5 REMOVE AND USE AS JIG FOR INSTALLING J1,J2,J3 AND J4.

6 AFFIX IDENT LABEL HERE.

7 ALL TABS ON SHIELDS LOCATED AT THE SLOTS ON THE PCB SHALL BE TWISTED PRIOR TO SOLDER REFLOW.

CAUTION:
CONTAINS PARTS AND ASSEMBLIES SUSCEPTIBLE TO DAMAGE BY ELECTROSTATIC DISCHARGE (ESD).

	IFR SYSTEMS INC
DRAWN DATE: R. AST 4-10-92	TITLE: ASSEMBLY DWG
CHECKED DATE: M.BACHMAN 8-20-92	IF AMP / DEMOD
APPROVED DATE: S.PIERSON 8-20-92	SIZE: D; DWG. NO.: 7010-8730-400; REV: F
108704FG.PLT	SCALE: N.T.S.; DO NOT SCALE; FSCM 51190; SHEET 1 of 1

Scans by ArtekMedia © 2008

Scans by ArtekMedia © 2008

DATE	REV	CHANGE	APPD
8/20/92	C	DESIGN RELEASE RH	DKB
4/29/93	C1	PROD REL PER ECN 15564 RH	DKB
7/7/95	D	INC ECN 16555 BP	BM

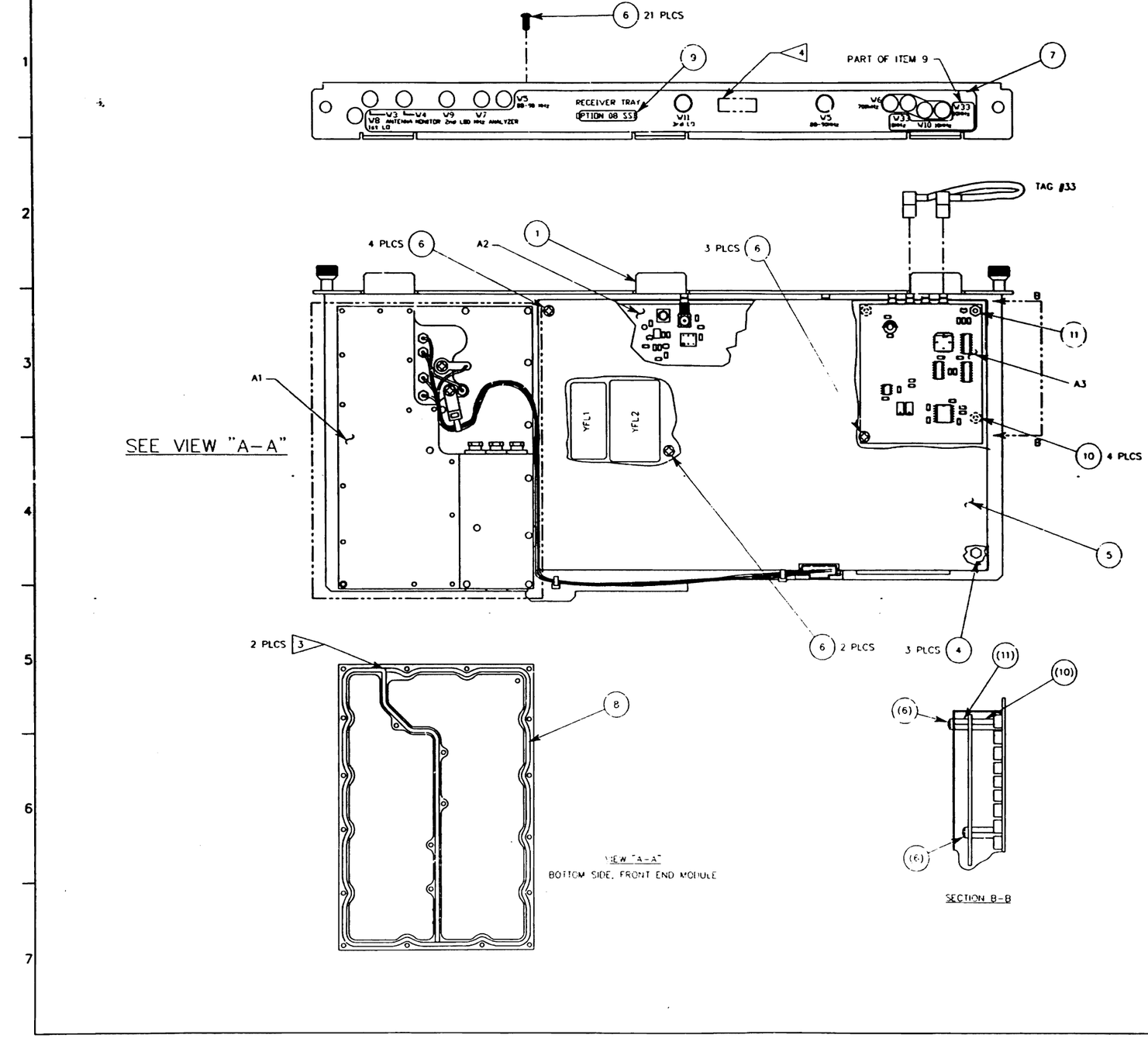

NOTES:

1. BASIC REFERENCE DESIGNATORS SHOWN, FOR COMPLETE DESIGNATOR PREFIXES REFER TO PRODUCT STRUCTURE, AND SYSTEM INTERCONNECT FOR APPLICATIONS WHERE USED.
2. REFERENCE INTERCONNECT: 0000-8740-400

3 CUT ENDS OF GASKET MUST MEET UNDER COMPRESSION WHEN INSTALLED.

4 AFFIX MODULE I.D. LABEL HERE.

"THIS DOCUMENT CONTAINS PROPRIETARY INFORMATION OF IFR, INC. AND IS NOT TO BE DISCLOSED, REPRODUCED, OR PUBLISHED WITHOUT IFR'S APPROVAL"

IFR SYSTEMS INC
10200 West 44th St., Wichita, Kansas 67235

DRAWN HARRIS 7/21/92	TITLE MECH ASSY, RECEIVER TRAY OPT 08
CHECKED S. PERKINS 8/20/92	
APPROVED M. BACHMAN 8/20/92	SIZE D · DWG NO 7001-8743-200 · REV D
087432D0.DWG	PLOT SCALE 1=1 · SCALE 1=1 · DATE 5/1/90 · SHEET 1 of 1

DATE	REV	CHANGE	APVD
4/7/95	A	RELEASE	RH DKB

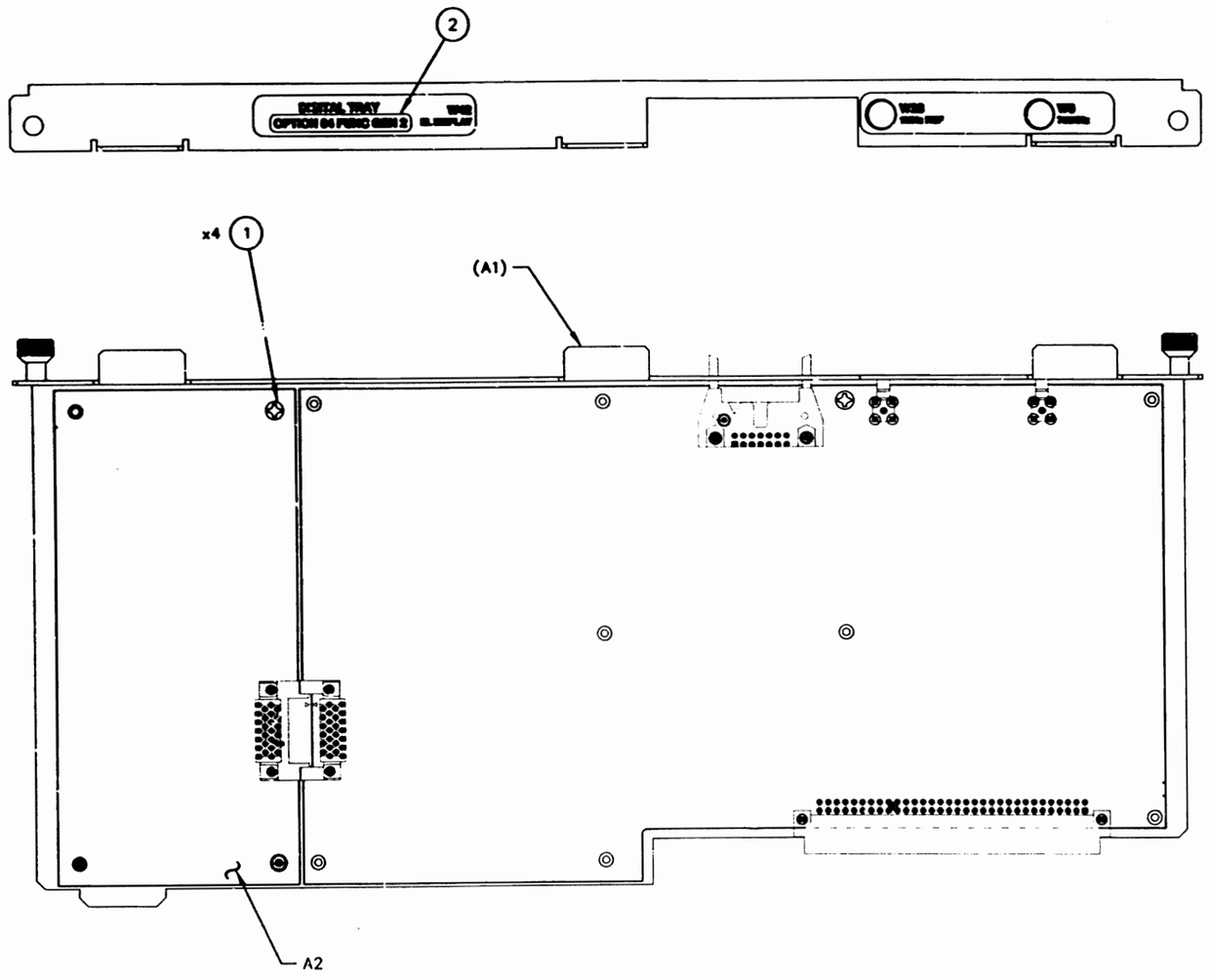

NOTES:

1. BASIC REFERENCE DESIGNATORS SHOWN, FOR COMPLETE DESIGNATOR PREFIXES REFER TO PRODUCT STRUCTURE, AND SYSTEM INTERCONNECT FOR APPLICATIONS WHERE USED.

"THIS DOCUMENT CONTAINS PROPRIETARY INFORMATION OF IFR, INC. AND IS NOT TO BE DISCLOSED, REPRODUCED, OR PUBLISHED WITHOUT IFR'S APPROVAL."

	IFR SYSTEMS INC 10200 West York St., Wichita, Kansas 67215
DRAWN DATE: HARRIS 2/10/95	TITLE: MECH ASSY, DIGITAL TRAY OPT 04
CHECKED DATE: D.BROKSCHMIDT 4/6/95	
APPROVED DATE: M.BACHMAN 4/6/95	SIZE: C; DWG. NO.: 7001-0640-700; REV: A
006407A0.DWG	PLOT SCALE: 1=1; SCALE 1=1; CAGE 51190; SHEET 1 OF 1

Scans by ArtekMedia © 2008

Scans by ArtekMedia © 2008

DATE	REV	CHANGE	APVD
5/9/95	A	RELEASE PER ECN 16576 MB	DKB
02/01/96	A1	INC PER ECN 16881 RH	DKB
9/16/96	B	INC PER ECN 17135 BP	MB

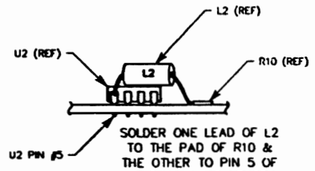

DETAIL A

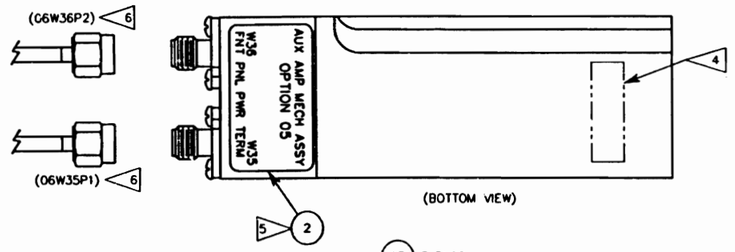

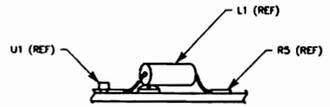

DETAIL "D"

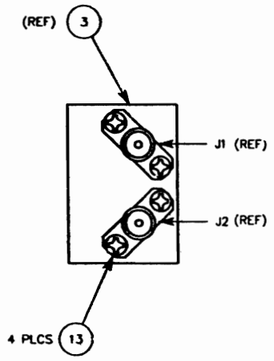

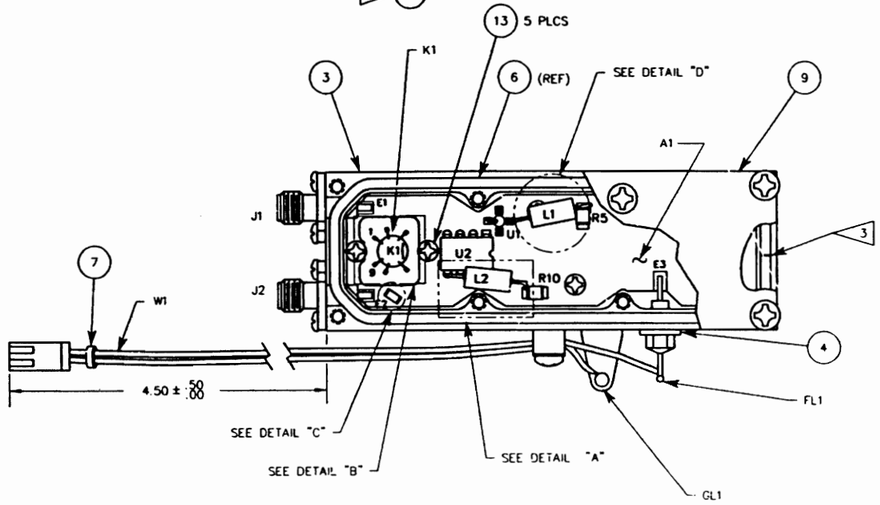

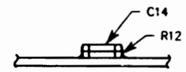

DETAIL "C"

NOTES:

1. BASIC REFERENCE DESIGNATORS SHOWN. FOR COMPLETE DESIGNATOR PREFIXES REFER TO PRODUCT STRUCTURE, AND SYSTEM INTERCONNECT FOR APPLICATIONS WHERE USED.
2. MECH ASSY. DRAWING SHOWS ONLY PORTION OF PC BOARD ASSY REQUIRED FOR REF ONLY.
3. CUT ENDS OF GASKET MUST MEET UNDER COMPRESSION WHEN INSTALLED.
4. AFFIX MODULE IDENTIFICATION LABEL HERE.
5. NOMENCLATURE ON LABEL IS ONLY SHOWN FOR PROPER OREINTATION AND MAY NOT MATCH YOUR LABEL.
6. INSTALL AT COMPOSITE LEVEL. (REPLACE 87W2)

WIRE RUNNING LIST				
DESG	FROM	TO	COLOR	AWG
W1W1	P1-01	FL1	RED	22
W1W2	P1-02	GL1	BLK	22

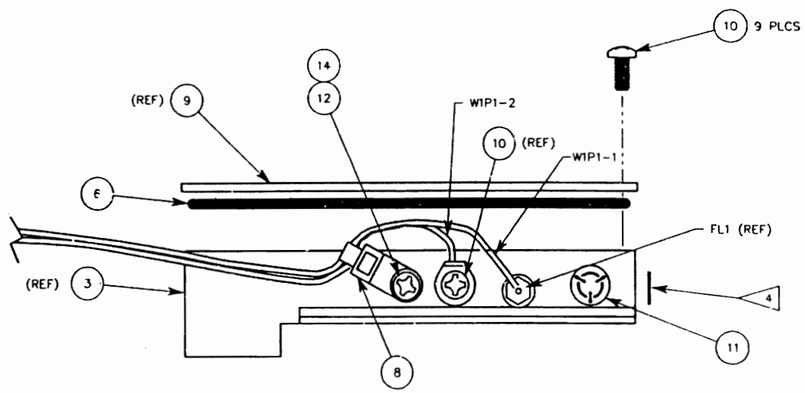

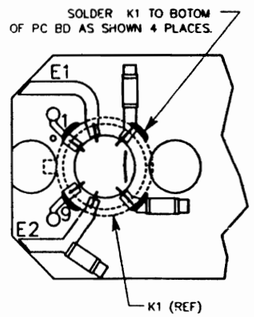

DETAIL B

CAUTION:
CONTAINS PARTS AND ASSEMBLIES SUSCEPTIBLE TO DAMAGE BY ELECTROSTATIC DISCHARGE (ESD)

"THIS DOCUMENT CONTAINS PROPRIETARY INFORMATION OF IFR SYSTEMS, INC. AND IS NOT TO BE DISCLOSED, REPRODUCED, OR PUBLISHED WITHOUT IFR'S APPROVAL."

IFR SYSTEMS INC
Wichita, Kansas 67215

DRAWN M.BRUFFETT 5/9/95	TITLE MECH ASSY, AUXILIARY AMP OPT 05
CHECKED R.HARRIS 5/11/95	
APPROVED M.BACHMAN 5/15/95	SIZE D · DWG NO 7005-0641-200 · REV B
006412B0.DWG	PLOT SCALE 1=1 · SCALE 1=1 · CAGE 51190 · SHEET 1 OF 1

DATE	REV	COMMENT	APVD
8/20/92	C	DESIGN RELEASE RH	DKB
4/29/93	C1	PRCD REL PER ECN 15564 RH	DKB
7/6/95	D	INC ECN 16555 BP	DKB

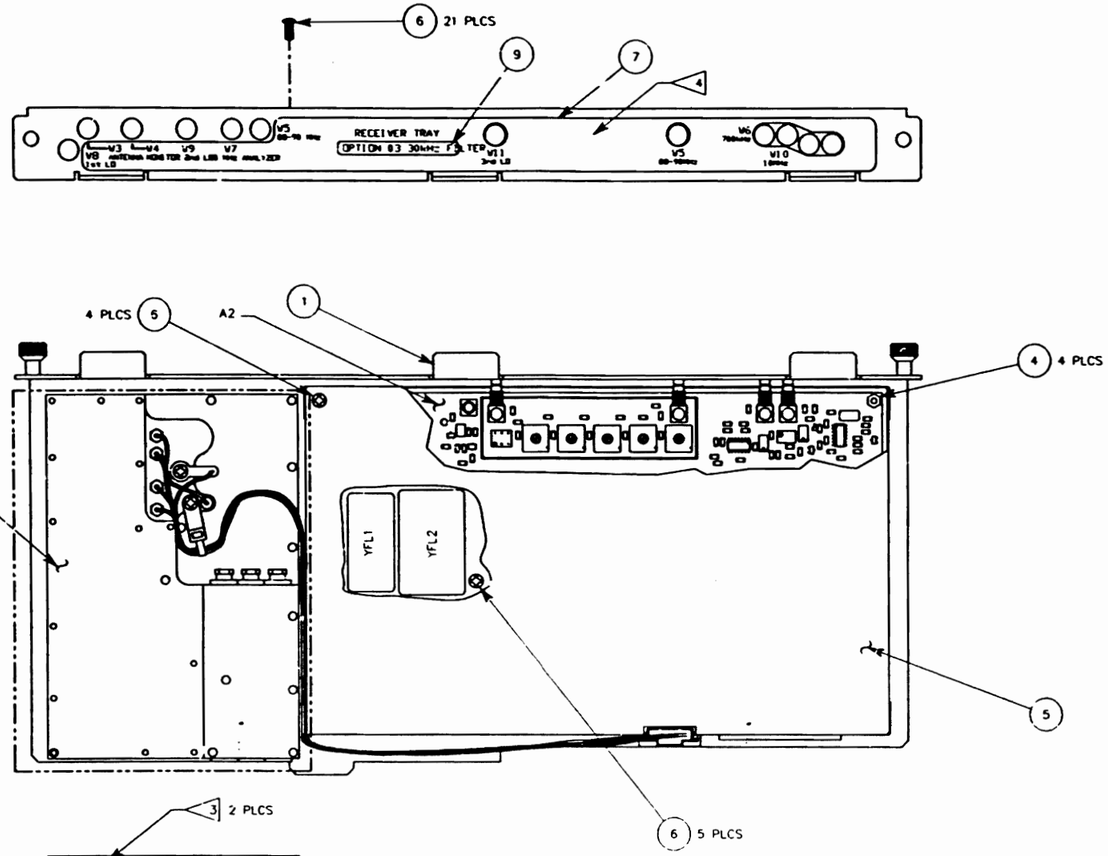

VIEW "A-A"
BOTTOM SIDE, FRONT END MODULE

NOTES:

1. BASIC REFERENCE DESIGNATORS SHOWN, FOR COMPLETE DESIGNATOR PREFIXES REFER TO PRODUCT STRUCTURE, AND SYSTEM INTERCONNECT FOR APPLICATIONS WHERE USED.
2. REFERENCE INTERCONNECT: 0000-8740-400

3 CUT ENDS OF GASKET MUST MEET UNDER COMPRESSION WHEN INSTALLED.

4 AFFIX MODULE I.D. LABE. HERE.

CAUTION:
CONTAINS PARTS AND ASSEMBLIES SUSCEPTIBLE TO DAMAGE BY ELECTROSTATIC DISCHARGE (ESD).

"THIS DOCUMENT CONTAINS PROPRIETARY INFORMATION OF IFR, INC. AND IS NOT TO BE DISCLOSED, REPRODUCED, OR PUBLISHED WITHOUT IFR'S APPROVAL"

IFR SYSTEMS INC

DRAWN HARRIS 7/24/92	TITLE	MECH ASSY, RECEIVER TRAY OPT 03
CHECKED S PERKINS 8/20/92		
APPROVED M. BACHMAN 8/20/92	SIZE D	DWG NO 7001-8743-300 REV D
087433D0.DWG	PLOT SCALE 1=1	SCALE 1=1 CAGE 51190 SHEET 1 of 1

Scans by ArtekMedia © 2008