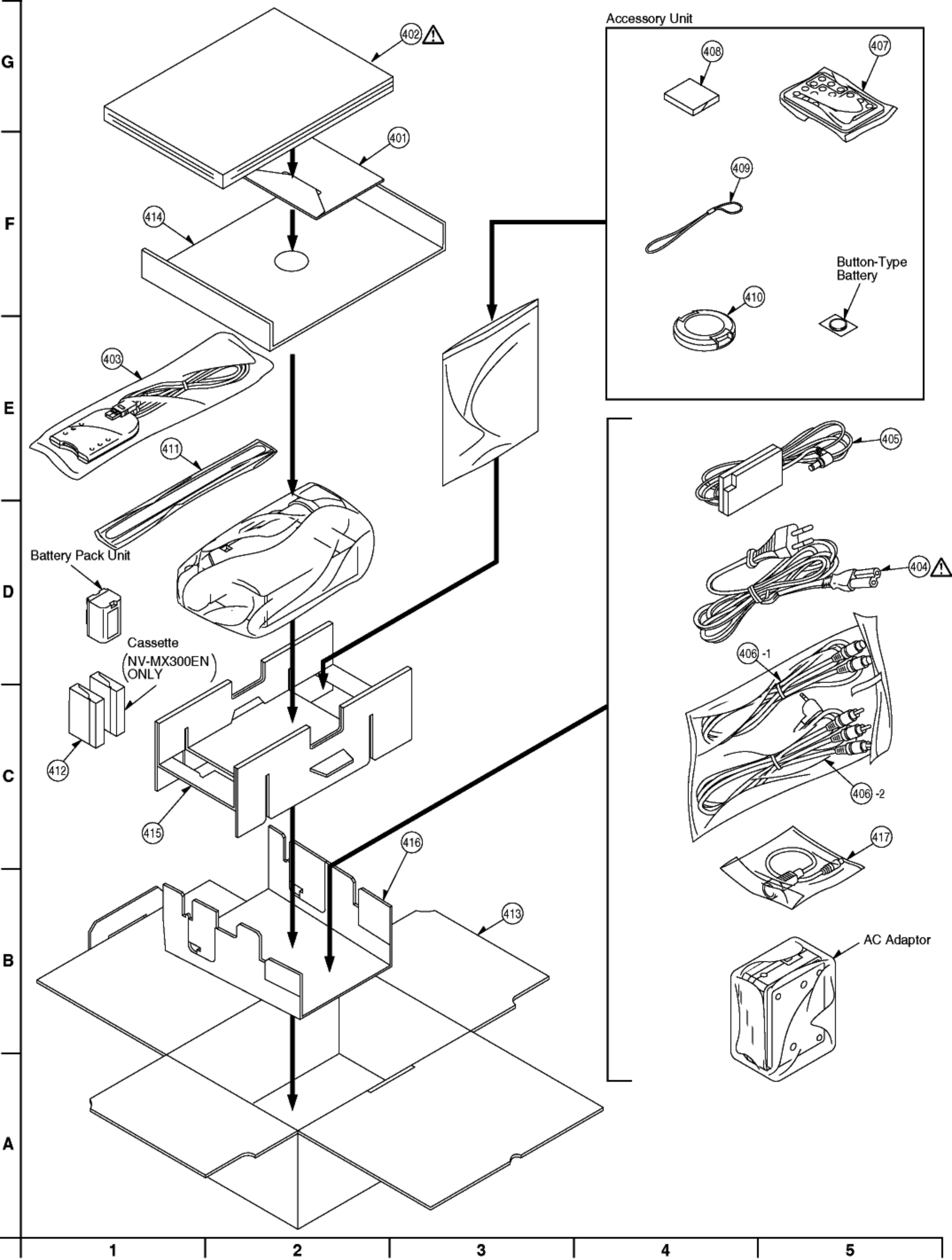
Accessory Unit
402
401
414
403
411
Battery Pack Unit
Cassette
(NV-MX300EN ONLY)
412
415
416
413
408
407
409
Button-Type Battery
410
405
404
406 -1
406 -2
417
AC Adaptor
G
F
E
D
C
B
A
1
2
3
4
5