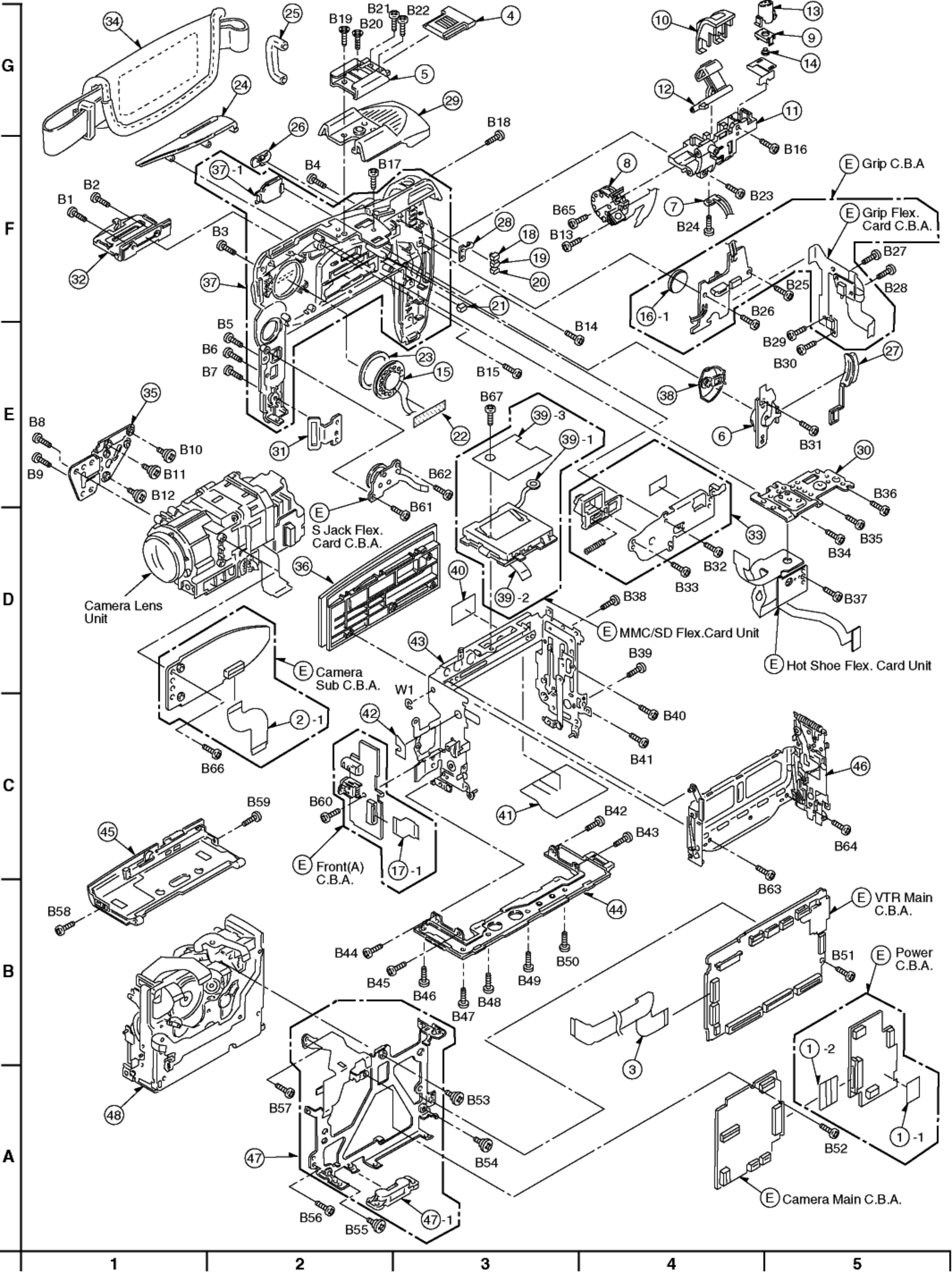
G
F
E
D
C
B
A
1
2
3
4
5
34
25
B19
B20
B21
B22
4
5
24
29
26
B18
37 -1
B4
B17
B2
B1
32
B3
37
8
B65
B13
28
18
19
20
21
B14
10
13
9
14
12
11
B16
B23
7
B24
E Grip C.B.A
E Grip Flex. Card C.B.A.
B27
B28
B25
B26
16 -1
B29
B30
27
B5
B6
B7
23
15
B15
38
6
B31
35
B8
B9
B10
B11
B12
31
22
B67
39 -3
39 -1
30
B36
B35
B34
B62
B61
E S Jack Flex. Card C.B.A.
33
B32
B33
B38
B37
36
40
39 -2
Camera Lens Unit
E MMC/SD Flex.Card Unit
B39
E Hot Shoe Flex. Card Unit
43
E Camera Sub C.B.A.
W1
42
2 -1
B40
B41
B66
46
B59
B60
41
B42
B43
45
E Front(A) C.B.A.
17 -1
B64
B63
B58
44
E VTR Main C.B.A.
B44
B45
B46
B47
B48
B49
B50
B51
E Power C.B.A.
1 -2
3
1 -1
48
B57
B53
B52
47
B54
E Camera Main C.B.A.
B56
B55
47 -1