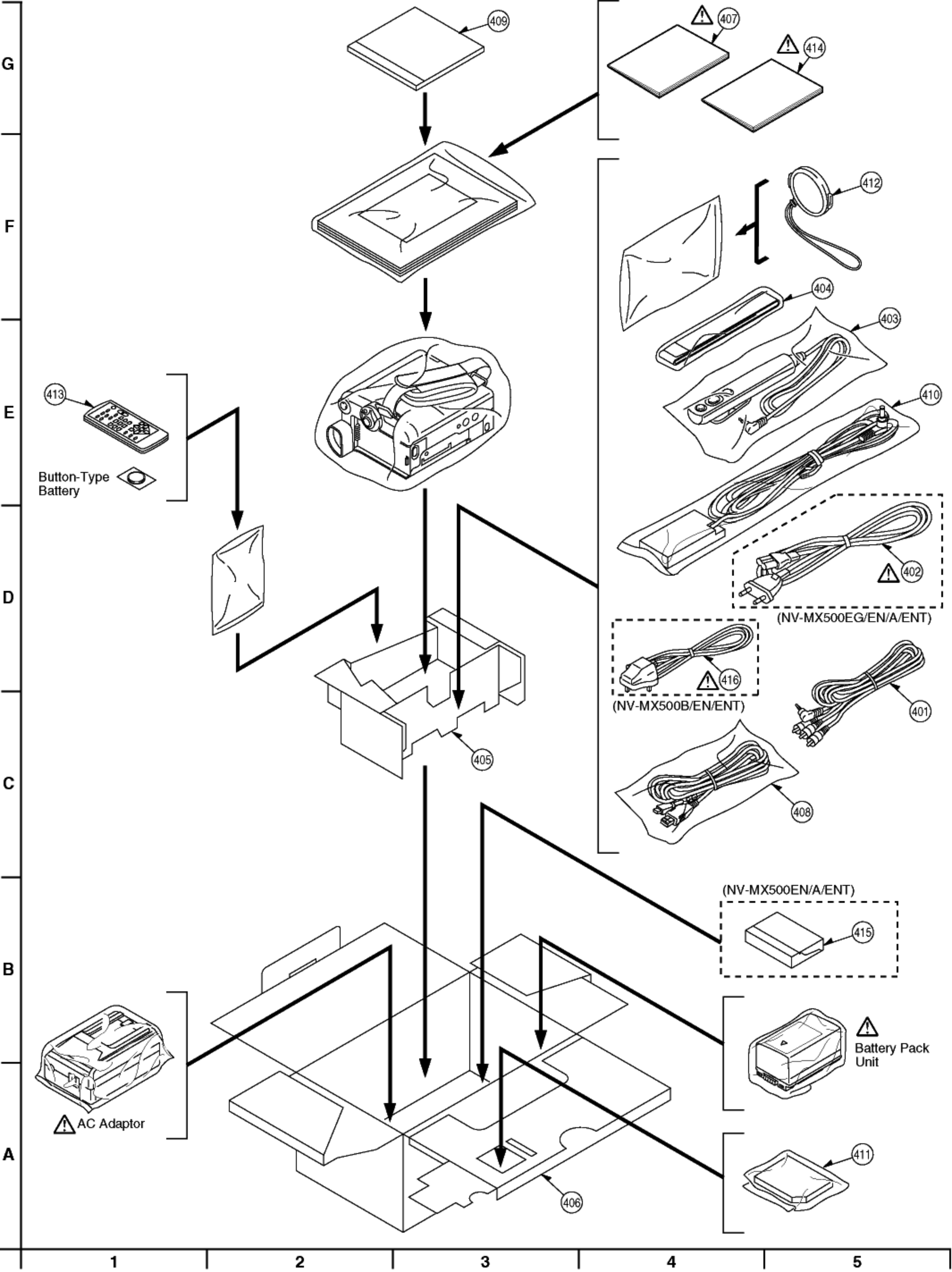
G
F
E
D
C
B
A
1
2
3
4
5
409
407
414
412
404
403
410
413
Button-Type
Battery
402
(NV-MX500EG/EN/A/ENT)
416
(NV-MX500B/EN/ENT)
401
408
405
(NV-MX500EN/A/ENT)
415
Battery Pack
Unit
AC Adaptor
411
406