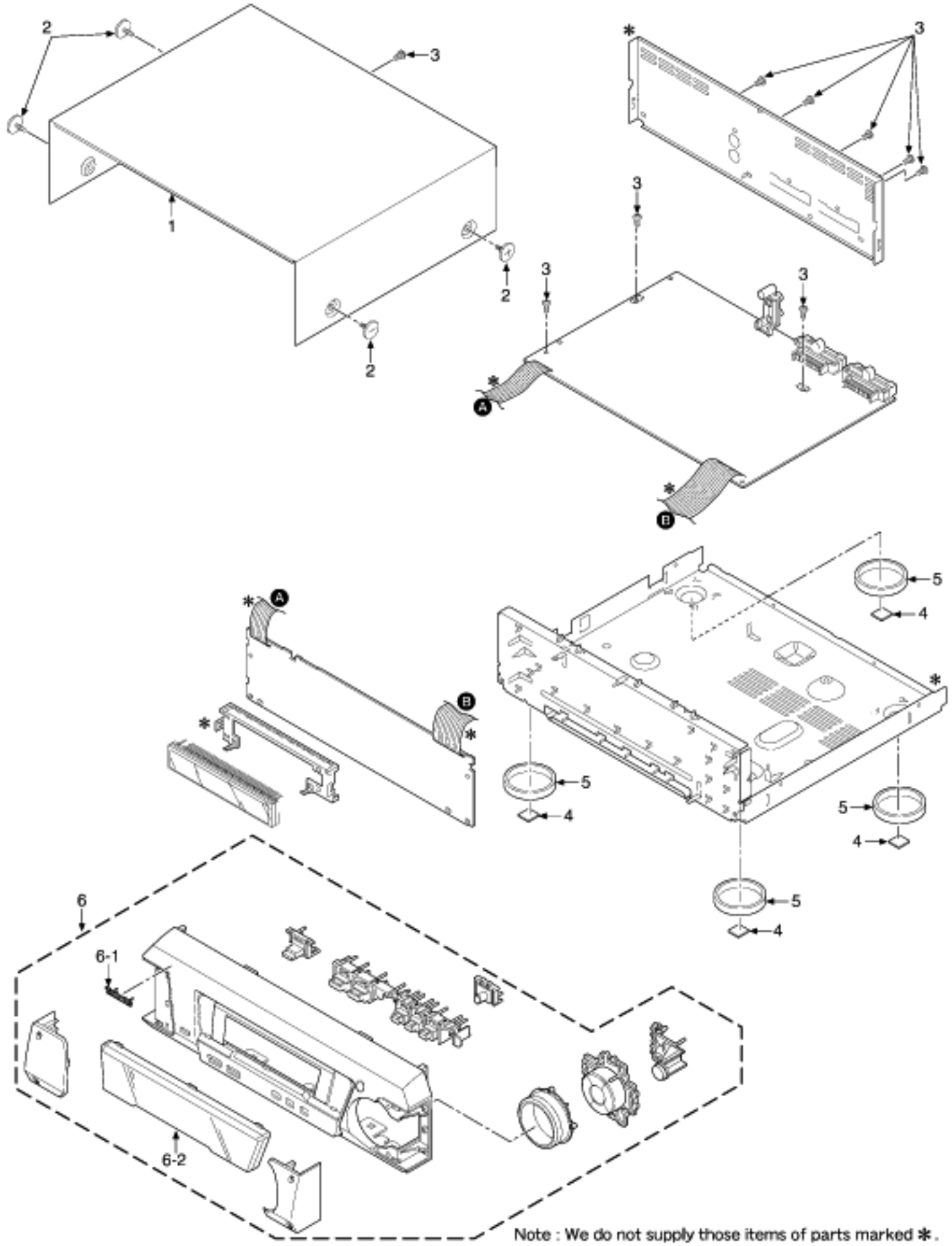

Note : We do not supply those items of parts marked ✱.