Service Manual

TOP NEXT

AD0102031C2

Service Manual

Sound Processor

DOLBY SURROUND

- SH-EH570

Colour

(S).....Silver Type

Area

(E).....Europe.

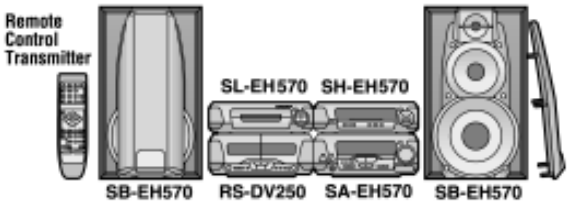

Because of unique interconnecting cables, when a component requires service, send or bring in the entire system.

System	SC-EH570
Sound Processor	**SH-EH570**
Tuner/Amplifier	SA-EH570
CD Player	SL-EH570
Cassette Deck	RS-DV250
Front Speakers*	SB-EH570

* : Made in Spain.

Specifications

EQ/SFP section

MANUAL GEQ:
5-Band EQ
Center frequency; 70 Hz, 300 Hz, 1 kHz, 3.15 kHz, 10 kHz
Level control; ± 2, 4, 6 dB
EQ mode:
3 modes; HEAVY, CLEAR, SOFT

Pre-amplifier section

Input sensitivity/impedance:
AUX; 250 mV/15 kΩ

DSP control section

DSP control mode: SUPER SOUND EQ

Spectrum analyzer section

Display mode: NORMAL, PEAKHOLD, AURORA

General

Dimensions (W×H×D): 293×89×269 mm
Mass: 1.4 kg

Notes: Specifications are subject to change without notice.
Mass and dimensions are approximate.

Manufactured under license from Dolby Laboratories.
"Dolby", "Pro Logic" and the double-D symbol are trademarks of Dolby Laboratories.

© 2001 Matsushita Electric Industrial Co., Ltd. All rights reserved. Unauthorized copying and distribution is a violation of law.

⚠ WARNING

This service information is designed for experienced repair technicians only and is not designed for use by the general public.
It does not contain warnings or cautions to advise non-technical individuals of potential dangers in attempting to service a product.
Products powered by electricity should be serviced or repaired only by experienced professional technicians. Any attempt to service or repair the product or products dealt with in this service information by anyone else could result in serious injury or death.

Technics®

•@

TOP NEXT

1 Note

TOP PREVIOUS NEXT

Refer to the service manual for Model No. SA-EH570 (Order No. AD0102030C2) for information on Accessories and Packaging.

•@

TOP PREVIOUS NEXT

2 Location of Controls

TOP PREVIOUS NEXT

•@

TOP PREVIOUS NEXT

3 Operation Checks and Component Replacement /Procedures

TOP PREVIOUS NEXT

- This section describes procedures for checking the operation of the major printed circuit boards and replacing the main components.
- For reassembly after operation checks or replacement, reverse the respective procedures. Special reassembly procedures are described only when required.

3.1 Checking for the FL P.C.B.

3.2 Checking for the main P.C.B.

•@

TOP PREVIOUS NEXT

3.1 Checking for the FL P.C.B.

TOP PREVIOUS NEXT

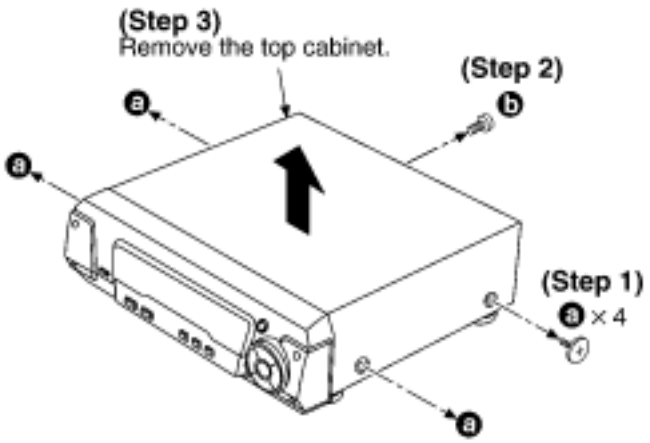

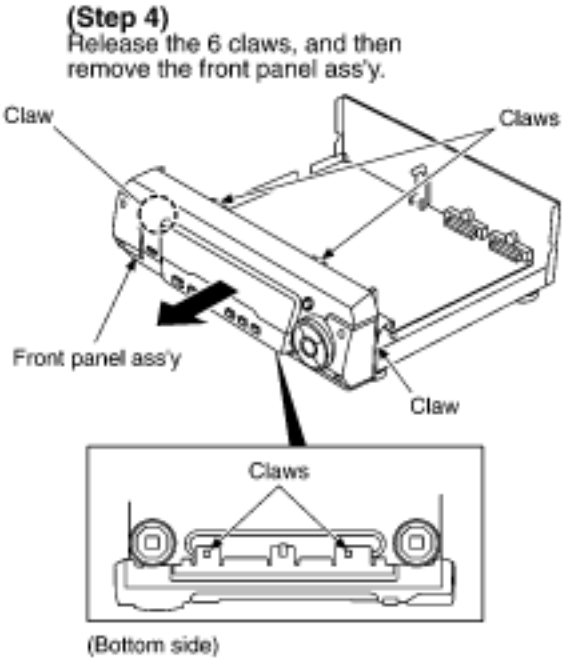

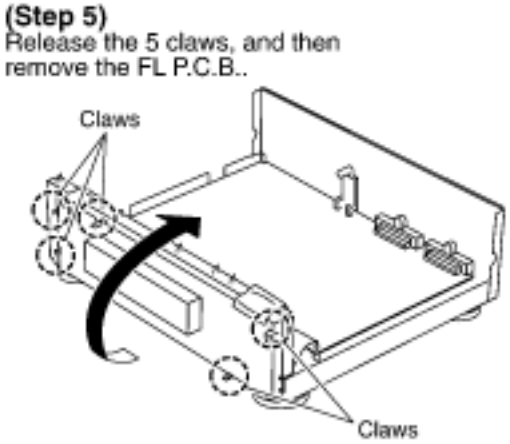

- Check the FL P.C.B. as shown below.

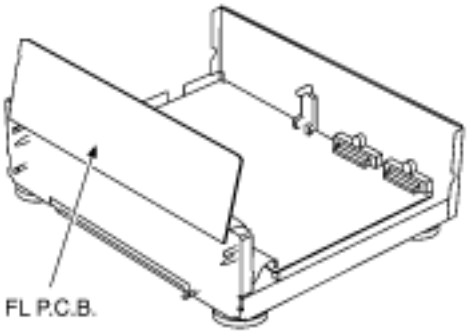

•@

TOP PREVIOUS NEXT

3.2 Checking for the main P.C.B.

TOP PREVIOUS NEXT

- Follow the (Step 1) - (Step 3) of item 3.1.

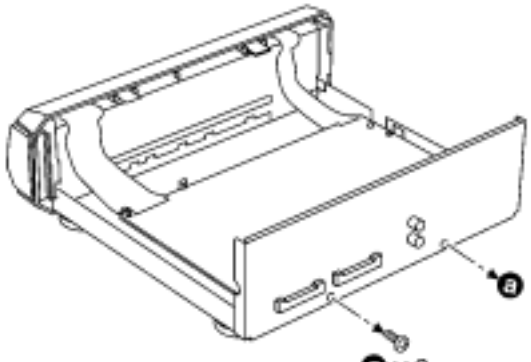

(Step 1)

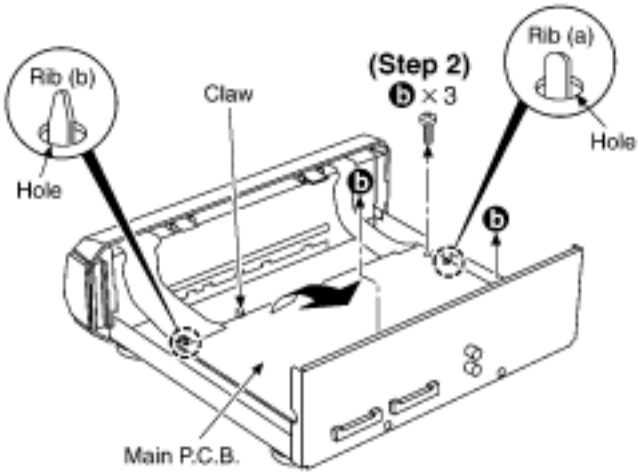

(Step 3)
Release the claw, and then lift up the main P.C.B..
(Lift up the main P.C.B. until the rib (a) and rib (b) are released from the hole of main P.C.B..)

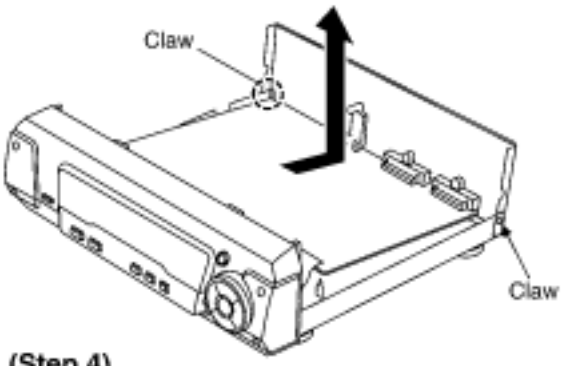

(Step 4)
Release the 2 claws, and then remove the main P.C.B. in the direction of arrow.

- Check the main P.C.B. as shown below.

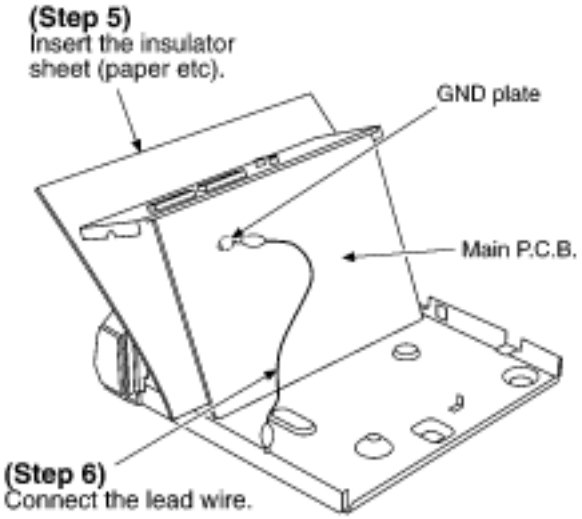

•@

TOP PREVIOUS NEXT

4 To Supply Power Source

TOP PREVIOUS NEXT

This unit is designed to operate on power supplied from system connected./When a component requires service, use the system connections to supply power source. /For system connections, refer to Fig.4-1.

Fig. 4-1.

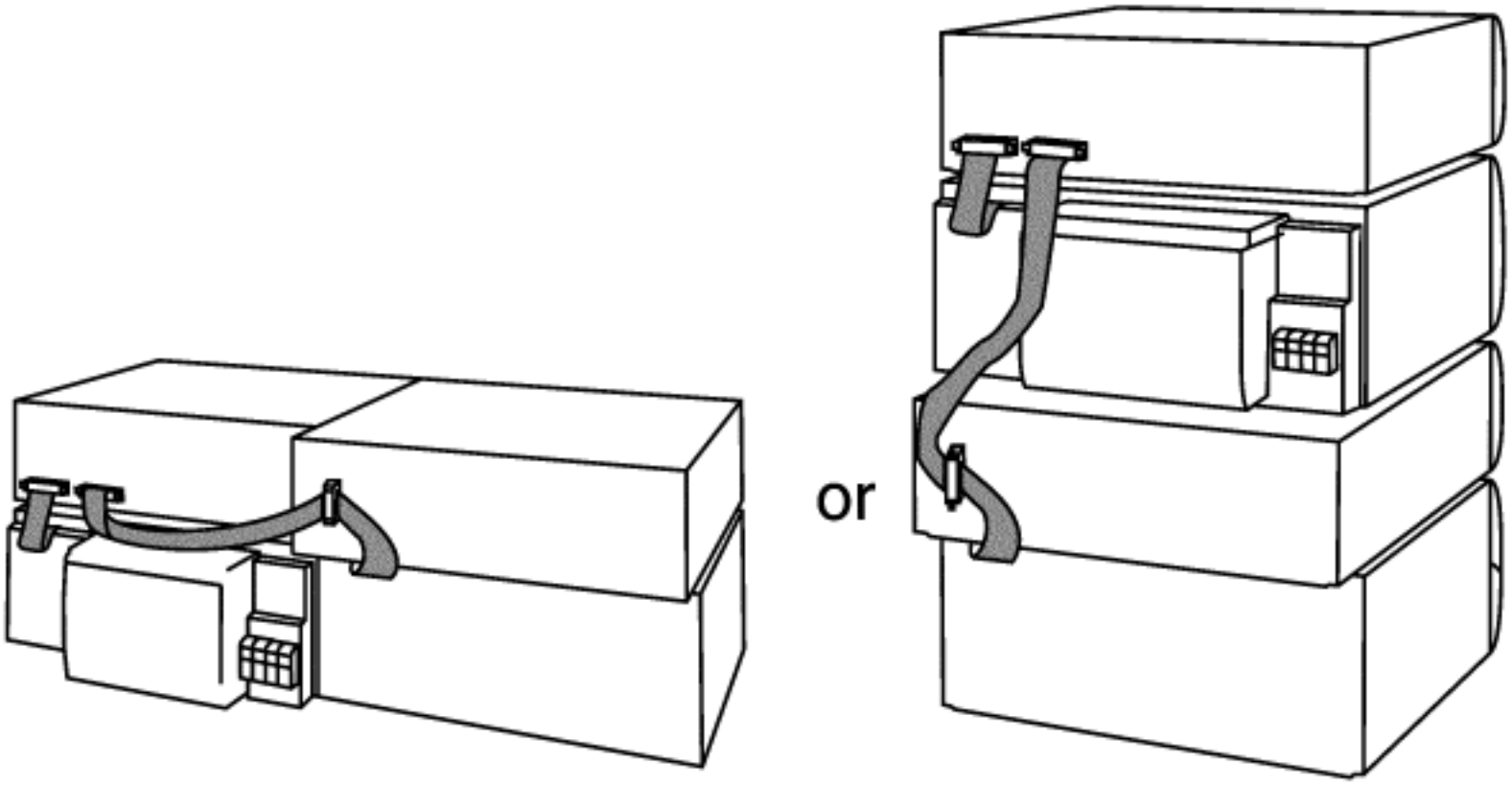

•@

TOP PREVIOUS NEXT

5 Schematic Diagram Notes

TOP PREVIOUS NEXT

- This schematic diagram may be modified at any time with the development of new technology.

Notes:

- S601:

  Display mode switch/(DISPLAY MODE)

- S602:

  Super sound EQ switch/(SUPER SOUND EQ)

- S603:

  AI EQ switch (AI EQ)

- S605:

  Manual EQ switch (M1)

- S606:

  Manual EQ switch (M2)

- S607:

  Manual EQ switch (M3)

- S608:

  Multi control switch (

  ►)

- S609:

Multi control switch (

▲)

- S610:

  Multi control switch (

  ◄)

- S611:

  Multi control switch (

  ▼)

- S612:

  Flat switch (FLAT)

- S615:

  EQ switch (EQ)

- Indicated voltage values are the standard values for the unit measured by the DC electronic circuit tester (high-impedance) with the chassis taken as standard. Therefore, there may exist some errors in the voltage values, depending on theinternal impedance of the DC circuit tester.

  - No mark

    : Power on

- Important safety notice:

  Components identified by ⚠ mark have special characteristics important for safety.

  Furthermore, special parts which have purposes of fire-retardant (resistors), high-quality sound (capacitors), low-noise (resistors), etc. are used.

When replacing any of components, be sure to use only manufacturer's specified parts shown in the parts list.

- The supply part number is described alone in the replacement parts list.
- Caution!

  IC and LSI are sensitive to static electricity.

  Secondary trouble can be prevented by taking care during repair.

  Cover the parts boxes made of plastics with aluminum foil.

  Ground the soldering iron.

  Put a conductive mat on the work table.

  Do not touch the legs of IC or LSI with the fingers directly.
- Voltage and signal line

  ❍

  : Positive voltage line

  ❍

  : Negative voltage line

  ❍

  : CD playback signal line

•@

6 Schematic Diagram

TOP PREVIOUS NEXT

•@

TOP PREVIOUS NEXT

7 Printed Circuit Board Diagram

TOP PREVIOUS NEXT

•@

TOP PREVIOUS NEXT

8 Type Illustration of ICs, Transistors and Diodes

TOP PREVIOUS NEXT

•@

TOP PREVIOUS NEXT

9 Wiring Connection Diagram

TOP PREVIOUS NEXT

•@

TOP PREVIOUS NEXT

10 Block Diagram

TOP PREVIOUS NEXT

•@

TOP PREVIOUS NEXT

11 Terminal Function of ICs

TOP PREVIOUS NEXT

11.1 IC601 (C2BBGF000269):System Control/FL Drive

•@

TOP PREVIOUS NEXT

11.1 IC601 (C2BBGF000269):/System Control/FL Drive

TOP PREVIOUS NEXT

Pin No.	Terminal Name	I/O	Function
1	KEY1	I	Operation key signal input
2	KEY2	I	Operation key signal input
3	SP IN	I	A/D signal input from IC602
4	SP A	O	Band select signal output for IC602
5	SP B	O	Band select signal output for IC602
6	SP C	O	Band select signal output for IC602
7	SA CS	I	Chip select signal input
8	DSP RST	O	Reset signal output for IC401
9	DSP CS	O	Chip select signal output for IC401
10	DSP SNS	I	Sense signal input from IC401
11	DSP ACK	I	Acknowledge signal input from IC401
12	DSP CK	O	Clock signal output for IC401
13	DSP DO	O	Data signal output for IC401
14	DSP DI	I	Data signal input from IC401
15	JOG A	-	Not used, open
16	JOG B	-	Not used, open
17	CNVSS	-	GND terminal
18	RESET	I	System reset signal input
19	NC	-	Not used, open
20	NC	-	Not used, open
21	VSS	-	GND terminal
22	X IN	I	Oscillator connected terminal (F=4 MHz)
23	X OUT	O	
24	VCC	I	Power supply terminal
25	NC	-	Not used, open
26	NC	-	Not used, open
27	LED CFO	-	Not used, open
28	LED CFG	-	Not used, open
29	BR93 DATA	-	Not used, connected to GND via resistor

30	BR93 CS	-	Not used, connected to GND via resistor
31	BR93 CK	-	Not used, connected to GND via resistor
32	SYNC	I	Power failure detect signal input
33	SA REQ	O	Request signal output for Tuner/Amplifier
34	SA CK	O	Serial communication signal to Tuner/ Amplifier (Clock signal output)
35	SA DO	O	Serial communication signal to Tuner/ Amplifier (Data signal output)
36	SA DI	I	Serial communication signal to Tuner/ Amplifier (Data signal input)
37	LED SSS	O	LED (AI EQ) signal output
38	LED DPL	O	LED (SUPER SOUND EQ) signal output
39	LED SPO	-	Not used, open
40	LED SPG	-	Not used, open
41	LED 3DO	-	Not used, open
42	LED 3DG	O	LED (M3) signal output
43	LED MRO	-	Not used, open
44	LED MRG	O	LED (M2) signal output
45	LED VRO	-	Not used, open
46	LED VRG	O	LED (M1) signal output
47 | 80	P1 | P34	O	FL segment signal output
81	NC	-	Not used, open
82 | 88	7G | 1G	O	FL grid signal output
89	VEE	I	Power supply terminal (Negative)
90	CD&DECK DI	I	Data signal input (CD and Deck mechanism)
91	CD&DECK DO	O	Data signal output (CD and Deck mechanism)
92	CD&DECK CK	I	Clock signal input (CD and Deck mechanism)
93	NC	-	Not used, open
94	CD REQ	O	Serial data request signal output for CD
95	DECK REQ	O	Serial data request signal output for Deck mechanism
96	CD&DECK CS	I	Chip select signal input (CD and Deck mechanism)
97	AVSS	-	GND terminal
98	VREF	I	Reference voltage input
99	REGIN0	I	Destination select signal input

12 Replacement Parts List

TOP PREVIOUS NEXT

Notes:

- Important safety notice:

  Components identified by ⚠ mark have special characteristics important for safety.

  Furthermore, special parts which have purposes of fire-retardant (resistors), high-quality sound (capacitors), low-noise (resistors), etc. are used.

  When replacing any of components, be sure to use only manufacture's specified parts shown in the parts list.

- The marking [RTL] indicates that Retention Time is Limited for this item. After the discontinuation of this assembly in production, the item will continue to be available for a specific period of time. The retention period of availability is dependenton the type of assembly, and in accordance with the laws governing part and product retention. After the end of this period, the assembly will no longer be available.

- All parts are supplied by MESA.

Ref. No.	Part No.	Part Name & Description	Pcs	Remarks
1	RKM0400-1S	TOP CABINET	1	
2	RHD30007-1S	SCREW	4	
3	XTB3+8JFZ	SCREW	9	
4	RKA0105-K	RUBBER	4	
5	RKA0106-N	FOOT RING	4	
6	RYP0996-S	FRONT PANEL ASS´Y	1	
6-1	RGB0025-A	TECHNICS BADGE	1	
6-2	RKW0576A-1V	FL WINDOW	1	
C135,36	ECUV1H101KCV	50V 100P	2	F1H1H101A720
C201-04	ECBT1H331KB5	50V 330P	4	F1D1H331A012

C205,06	ECBT1H330J5	50V 33P	2	F1D1H330A006
C207,08	RCE1HKA4R7BG	50V 4.7U	2	F2A1H4R70009
C209,10	ECBT1C103MS5	16V 0.01U	2	F1D1C103A004
C221,22	ECBT1H101KB5	50V 100P	2	F1D1H101A012
C223,24	ECA1CAK100XB	16V 10U	2	
C225-28	ECBT1H101KB5	50V 100P	4	F1D1H101A012
C231-33	ECBT1H101KB5	50V 100P	3	F1D1H101A012
C301-04	RCE1HKA4R7BG	50V 4.7U	4	F2A1H4R70009
C305,06	ECBT1H101KB5	50V 100P	2	F1D1H101A012
C307,08	ECBT1H100JC5	50V 10P	2	F1D1H100A015
C309,10	ECBT1C103MS5	16V 0.01U	2	F1D1C103A004
C311	ECA1CAK100XB	16V 10U	1	
C312	ECA1CAK220XB	16V 22U	1	
C313	ECA1CAK100XB	16V 10U	1	
C315	ECBT1H101KB5	50V 100P	1	F1D1H101A012
C317	ECBT1C562KR5	16V 5600P	1	F1D1C562A010
C319	ECA1CAK100XB	16V 10U	1	
C321	ECA1CAK100XB	16V 10U	1	
C323,24	ECBT1C103MS5	16V 0.01U	2	F1D1C103A004
C329	ECA1CAK220XB	16V 22U	1	
C354	ECA1CAK100XB	16V 10U	1	
C356	ECA1CAK100XB	16V 10U	1	
C401	ECUVNE223KBV	25V 0.022U	1	F1H1E223A050
C402,03	ECUVNH103KBV	50V 0.01U	2	F1H1H103A748
C404	ECA0JAK470XH	6.3V 47U	1	
C601	ECBT1H104KB5	50V 0.1U	1	
C602	ECA0JM102	6.3V 1000U	1	
C603,04	ECBT1H102KB5	50V 1000P	2	F1D1H102A012
C605	ECA1VAK330XB	35V 33U	1	
C606,07	ECBT1H471KB5	50V 470P	2	F1D1H471A012
C608	ECBT1H221KB5	50V 220P	1	F1D1H221A012
C609,10	ECBT1C103MS5	16V 0.01U	2	F1D1C103A004
C611	ECA1HAK3R3XB	50V 3.3U	1	
C612,13	ECEA1CKS220	16V 22U	2	
C614	ECA1CAK100XB	16V 10U	1	
C615	ECA1VAK330XB	35V 33U	1	

C616	ECEA1VKS330Q	35V 33U	1	
C618,19	ECBT1C103MS5	16V 0.01U	2	F1D1C103A004
C620,21	ECA1HAK0R1XB	50V 0.1U	2	
C622,23	ECBT1H104KB5	50V 0.1U	2	
C624	ECBT1C103MS5	16V 0.01U	1	F1D1C103A004
C625	ECA0JAK101XB	6.3V 100U	1	
C626	ECBT1H473KB5	50V 0.047U	1	
C627,28	ECEA1CKS220	16V 22U	2	
C753,54	ECBT1C103MS5	0.01U	2	F1D1C103A004/ ⚠
C761-63	ECBT1C103MS5	16V 0.01U	3	F1D1C103A004
C764	ECA1AAK221XH	10V 220U	1	
C765	ECBT1C103MS5	16V 0.01U	1	F1D1C103A004
C766	ECA1CAK100XB	16V 10U	1	
C767	ECBT1C103MS5	16V 0.01U	1	F1D1C103A004
C768	ECA1CAK100XB	16V 10U	1	
C769	ECBT1C103MS5	16V 0.01U	1	F1D1C103A004
C770	ECA1CAK100XB	16V 10U	1	
C771,72	ECBT1C103MS5	16V 0.01U	2	F1D1C103A004
C773	ECA1AAK221XH	10V 220U	1	
C774	ECA1CAM221XB	16V 220U	1	
C801	ECUV1H120JCV	50V 12P	1	
C802	ECUV1H050CCV	50V 5P	1	
C804	ECUVNC104KBV	16V 0.1U	1	
C805	ECUVNJ105KBV	6.3V 1U	1	F1H0J105A002
C806,07	ECUV1H222KBV	50V 2200P	2	
C808-10	ECUVNH103KBV	50V 0.01U	3	F1H1H103A748
C811	ECUVNE223KBV	25V 0.022U	1	F1H1E223A050
C812	ECUVNC104KBV	16V 0.1U	1	
C814	ECUVNJ105KBV	6.3V 1U	1	F1H0J105A002
C815	ECUVNE223KBV	25V 0.022U	1	F1H1E223A050
C816	ECUVNC104KBV	16V 0.1U	1	
C818,19	ECUV1H681KBV	50V 680P	2	
C820,21	RCE1HKA4R7BG	50V 4.7U	2	F2A1H4R70009
C822	ECA0JAK470XH	6.3V 47U	1	
C823	EEAFC0J101B	6.3V 100P	1	
C824	ECA0JAK470XH	6.3V 47U	1	

C825-32	RCE1HKA4R7BG	50V 4.7U	8	F2A1H4R70009
C833-35	ECA0JAK470XH	6.3V 47U	3	
C837	ECA1CAK100XB	16V 10U	1	
C838,39	ECA1HAK010XI	50V 1U	2	ECA1HAK010XB
C840,41	RCE1HKA4R7BG	50V 4.7U	2	F2A1H4R70009
CN201	RJT065A20	CONNECTOR(20P)	1	K1FA220B0007
CN202	RJT065K20	CONNECTOR(20P)	1	K1FA220B0006
D203	MA165	DIODE	1	MA2C165
D204	MA719TA	DIODE	1	MA2C71900A
D301	MA700	DIODE	1	MA2C700
D304,05	MA719TA	DIODE	2	MA2C71900A
D601-04	1SS291TA	DIODE	4	
D605-10	MA165	DIODE	6	MA2C165/ ⚠
D611,12	LNJ301MPUJAD	LED	2	
D614-16	LNJ301MPUJAD	LED	3	
D651	MA165	DIODE	1	MA2C165
D653,54	MA165	DIODE	2	MA2C165
D761	MA4082LTA	DIODE	1	MAZ40820LF/ ⚠
D762	RL1N4003N02	DIODE	1	
D763-66	MA165	DIODE	4	MA2C165
D767	MA4051M	DIODE	1	MAZ40510M
D770	MA4062H	DIODE	1	MAZ40620H/ ⚠
D771	MA4051-L	DIODE	1	MAZ40510L
D772	MA165	DIODE	1	MA2C165
FL601	A2BD00000041	FL DISPLAY	1	
IC202	NJM4558MTE1	IC	1	C0ABBB000109
IC301	M5218AP	IC	1	C0AABB000055
IC302	NJM4558MTE1	IC	1	C0ABBB000109
IC401	C2BBFD000246	IC	1	
IC601	C2BBGF000269	IC	1	
IC602	M62457AFPE1	IC	1	C1BB00000486
IC801	C2HBZC000010	IC	1	

JK101	SJF3068-7N	JACK,AUX(DVD)	1	
L102	RLBV102V-Y	COIL	1	J0JBC0000014
L301,02	RLQA3R3JT1-Y	COIL	2	G0C3R3JA0019
L401	RLQB100JTD-D	COIL	1	
L601	RLQA100JT1-Y	COIL	1	G0C100JA0019
L801	RLBV601AV-Y	COIL	1	J0JCC0000077
L802	RLBV102V-Y	COIL	1	J0JBC0000014
L807	RLL500050T-Y	COIL	1	G0A100G00005
L808	RLQB100JTD-D	COIL	1	
L814	RLL500050T-Y	COIL	1	G0A100G00005
PCB1	REP3073C-M	P.C.B.ASS´Y	1	[RTL]
Q301-04	2SC3327A	TRANSISTOR	4	
Q305,06	UN411FTA	TRANSISTOR	2	UNR411F00A
Q307	2SC3327A	TRANSISTOR	1	
Q309	2SC3327A	TRANSISTOR	1	
Q314	2SC3327A	TRANSISTOR	1	
Q601	UN4211	TRANSISTOR	1	UNR4211
Q602-04	2SC3311ATA	TRANSISTOR	3	2SC3311A0A
Q761	2SD2137PQTA	TRANSISTOR	1	2SD21370PA/ ⚠
Q763	2SD592AR	TRANSISTOR	1	2SD0592AR/ ⚠
Q764	2SB621A-R	TRANSISTOR	1	2SB0621AH/ ⚠
Q765	2SC3311ATA	TRANSISTOR	1	2SC3311A0A
Q766	2SA1309ATA	TRANSISTOR	1	2SA1309AWA/ ⚠
Q767	2SC3311ATA	TRANSISTOR	1	2SC3311A0A
Q768	2SC3940AQSTA	TRANSISTOR	1	2SC3940ARA/ ⚠
R111-14	ERDS2FJ123	1/4W 12K	4	
R129,30	ERDS2T0T	1/4W 0	2	
R133	ERJ3GEY0R00V	CHIP JUMPER	1	
R201,02	ERDS2T0T	1/4W 0	2	
R203,04	ERDS2FJ222	1/4W 2.2K	2	

R205,06	ERDS2FJ563	1/4W 56K	2	
R207,08	ERDS2FJ273	1/4W 27K	2	
R209,10	ERDS2FJ823	1/4W 82K	2	
R213,14	ERDS2FJ222	1/4W 2.2K	2	
R218	ERDS2T0T	1/4W 0	1	
R221,22	ERDS2FJ221	1/4W 220	2	
R223,24	ERDS2FJ223	1/4W 22K	2	
R227,28	ERDS2FJ222	1/4W 2.2K	2	
R229,30	ERDS2FJ223	1/4W 22K	2	
R231-34	ERDS2FJ102	1/4W 1K	4	
R235,36	ERDS2FJ222	1/4W 2.2K	2	
R237,38	ERDS2FJ103	1/4W 10K	2	
R239	ERDS2FJ473	1/4W 47K	1	
R240	ERDS2FJ102	1/4W 1K	1	
R249,50	ERDS2FJ222	1/4W 2.2K	2	
R259,60	ERDS2T0T	1/4W 0	2	
R303,04	ERDS2FJ223	1/4W 22K	2	
R305-08	ERDS2FJ102	1/4W 1K	4	
R309,10	ERDS2FJ561	1/4W 560	2	
R311	ERDS2FJ223	1/4W 22K	1	
R312	ERDS2FJ182	1/4W 1.8K	1	
R313,14	ERDS2FJ392	1/4W 3.9K	2	
R315,16	ERDS2FJ274	1/4W 270K	2	
R317	ERDS2FJ223	1/4W 22K	1	
R318	ERDS2FJ101	1/4W 100	1	
R319	ERDS2FJ154	1/4W 150K	1	
R323	ERDS2FJ120	1/4W 12	1	
R325	ERDS2FJ102	1/4W 1K	1	
R327	ERDS2FJ561	1/4W 560	1	
R329	ERDS2FJ564	1/4W 560K	1	
R330	ERDS2T0T	1/4W 0	1	
R331	ERDS2FJ222	1/4W 2.2K	1	
R333	ERDS2FJ563	1/4W 56K	1	
R335	ERDS2FJ102	1/4W 1K	1	
R337	ERDS2FJ391	1/4W 390	1	
R346	ERDS2FJ102	1/4W 1K	1	

R348	ERDS2FJ222	1/4W 2.2K	1	
R349	ERDS2FJ123	1/4W 12K	1	
R352	ERDS2FJ103	1/4W 10K	1	
R353	ERDS2FJ224	1/4W 220K	1	
R372	ERDS2T0T	1/4W 0	1	
R401	ERJ3GEYJ472V	1/16W 4.7K	1	D0GB472JA002
R402	ERJ3GEYJ104Z	1/16W 100K	1	
R403	ERJ3GEYJ681V	1/16W 680	1	D0GB681JA002
R404	ERJ3GEYJ104Z	1/16W 100K	1	
R405-10	ERJ3GEYJ221V	1/16W 220	6	
R411	ERDS2FJ102	1/4W 1K	1	
R414,15	ERDS2FJ102	1/4W 1K	2	
R417	ERJ3GEYJ221V	1/16W 220	1	
R421	ERDS2FJ101	1/4W 100	1	
R424	ERDS2FJ102	1/4W 1K	1	
R426	ERDS2FJ472	1/4W 4.7K	1	
R429	ERDS2FJ472	1/4W 4.7K	1	
R430,31	ERJ3GEYJ103Z	1/16W 10K	2	
R601-03	ERDS2FJ102	1/4W 1K	3	
R604,05	ERDS2FJ103	1/4W 10K	2	
R606	ERDS2FJ102	1/4W 1K	1	
R607,08	ERDS2FJ221	1/4W 220	2	
R609	ERDS2FJ222	1/4W 2.2K	1	
R610	ERDS2FJ332	1/4W 3.3K	1	
R611	ERDS2FJ101	1/4W 100	1	
R612	ERDS2FJ102	1/4W 1K	1	
R613	ERDS2FJ562	1/4W 5.6K	1	
R614-17	ERDS2FJ102	1/4W 1K	4	
R618	ERDS2FJ104	1/4W 100K	1	
R619	ERDS2FJ681	1/4W 680	1	
R622,23	ERDS2FJ104	1/4W 100K	2	
R624,25	ERDS2FJ181	1/4W 180	2	
R627-29	ERDS2FJ181	1/4W 180	3	
R631	ERDS2FJ821	1/4W 820	1	
R632	ERDS2FJ102	1/4W 1K	1	
R633	ERDS2FJ122	1/4W 1.2K	1	

R634	ERDS2FJ152	1/4W 1.5K	1	
R635	ERDS2FJ182	1/4W 1.8K	1	
R636	ERDS2FJ222	1/4W 2.2K	1	
R637	ERDS2FJ821	1/4W 820	1	
R638	ERDS2FJ102	1/4W 1K	1	
R639	ERDS2FJ122	1/4W 1.2K	1	
R640	ERDS2FJ152	1/4W 1.5K	1	
R641	ERDS2FJ182	1/4W 1.8K	1	
R642	ERDS2FJ222	1/4W 2.2K	1	
R643,44	ERDS2FJ102	1/4W 1K	2	
R646	ERDS2FJ222	1/4W 2.2K	1	
R647	ERDS2FJ223	1/4W 22K	1	
R648-50	ERDS2FJ104	1/4W 100K	3	
R651	ERDS2FJ102	1/4W 1K	1	
R652,53	ERDS2FJ472	1/4W 4.7K	2	
R654-56	ERDS2FJ103	1/4W 10K	3	
R657	ERDS2FJ473	1/4W 47K	1	
R658,59	ERDS2FJ472	1/4W 4.7K	2	
R660	ERDS2FJ473	1/4W 47K	1	
R661	ERDS2FJ223	1/4W 22K	1	
R662	ERDS2FJ102	1/4W 1K	1	
R663,64	ERDS2FJ331	1/4W 330	2	
R665-67	ERDS2FJ473	1/4W 47K	3	
R668	ERDS2FJ222	1/4W 2.2K	1	
R671-80	ERJ6GEYJ104V	1/10W 100K	10	
R681	ERJ3GEYJ222V	1/16W 2.2K	1	
R682	ERJ3GEY0R00V	CHIP JUMPER	1	
R683-85	ERDS2T0T	1/4W 0	3	
R686	ERJ3GEY0R00V	CHIP JUMPER	1	
R716	ERDS2FJ821	1/4W 820	1	
R761	ERDS2T0T	1/4W 0	1	
R763	ERQ16NKWR33E	0.33	1	⚠
R764	ERDS2FJ821	1/4W 820	1	
R765	ERDS2FJ221	1/4W 220	1	
R766	ERDS2FJ182	1/4W 1.8K	1	
R767	ERDS2FJ102	1/4W 1K	1	

R768,69	ERDS2FJ122	1/4W 1.2K	2	
R770	ERD2FCJ4R7	1/4W 4.7	1	
R771	ERDS2FJ102	1/4W 1K	1	
R772	ERDS2FJ122	1/4W 1.2K	1	
R773	ERDS2FJ102	1/4W 1K	1	
R774	ERDS2FJ221	1/4W 220	1	
R801	ERJ3GEYJ221V	1/16W 220	1	
R802	ERJ3GEYJ105V	1/16W 1M	1	
R803	ERJ3GEYJ101V	1/16W 100	1	
R804-07	ERJ3GEYJ271V	1/16W 270	4	
R809,10	ERJ3GEYJ331V	1/16W 330	2	
R811	ERJ3GEYJ472V	1/16W 4.7K	1	D0GB472JA002
R812	ERJ3GEYJ331V	1/16W 330	1	
R813	ERJ3GEYJ472V	1/16W 4.7K	1	D0GB472JA002
R814	ERJ3GEYJ104Z	1/16W 100K	1	
R815-20	ERJ3GEYJ102V	1/16W 1K	6	ERJ3GEYJ102Z
R824,25	ERDS2FJ124	1/4W 120K	2	
R826	ERJ3GEYJ102V	1/16W 1K	1	ERJ3GEYJ102Z
R828	ERJ3GEYJ102V	1/16W 1K	1	ERJ3GEYJ102Z
R830	ERJ3GEYJ472V	1/16W 4.7K	1	D0GB472JA002
R831,32	ERDS2FJ222	1/4W 2.2K	2	
R834	ERJ3GEYJ223V	1/16W 22K	1	D0GB223JA002
R835,36	ERJ3GEYJ152V	1/16W 1.5K	2	
R837	ERJ3GEY0R00V	CHIP JUMPER	1	
R856	ERJ3GEY0R00V	CHIP JUMPER	1	
R898	ERJ3GEY0R00V	CHIP JUMPER	1	
S601-03	EVQ11G05R	SW,PUSH	3	
S605-12	EVQ11G05R	SW,PUSH	8	
S615	EVQ11G05R	SW,EQ	1	
X401	RSXY8M00D01T	OSCILLATOR	1	H2B800400005
X601	H2B400400013	OSCILLATOR	1	
X801	RSXZ36M8M01T	OSCILLATOR	1	

•@

13 Cabinet Parts Location

TOP PREVIOUS

•@

TOP PREVIOUS