Anhang
Appendix
Annexe

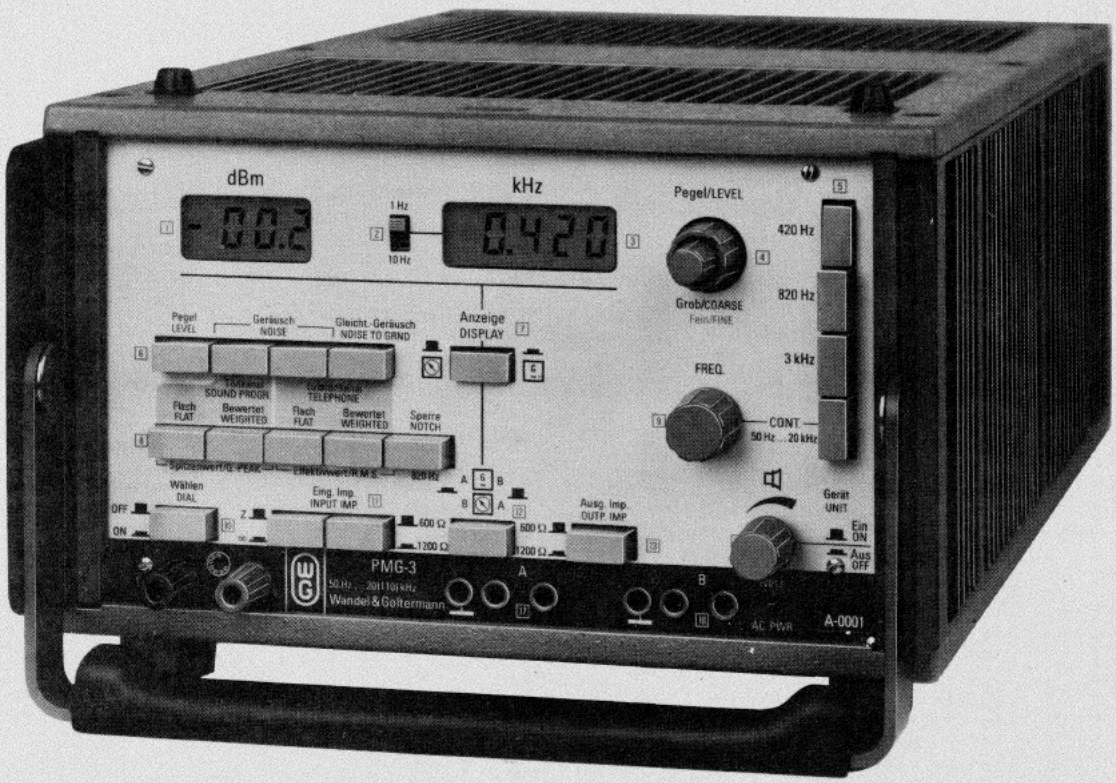

Pegelmeßgerät
Transmission Measuring Set
Appareil de mesure de niveau

PMG-3

PEGELMESSGERÄT PMG-3

für den Frequenzbereich 50 Hz bis 20 (110) kHz

TRANSMISSION MEASURING SET PMG-3

for the frequency range 50 Hz to 20 (110) kHz

APPAREIL DE MESURE DE NIVEAU PMG-3

pour la gamme de frèquence 50 Hz à 20 (110) kHz

Anhang/Appendix/Annexe BN 9202/03

Serie A...

Änderungen vorbehalten
Printed in the Federal Republic of Germany

Subject to change without notice
Printed in the Federal Republic of Germany

Droits de modifications réservés
Imprimé en République Fédérale d'Allemagne

I.12.81 brt/Kh
0.1.12.81 2861

Wandel & Goltermann

ELEKTRONISCHE
PRÄZISIONSMESSGERÄTE

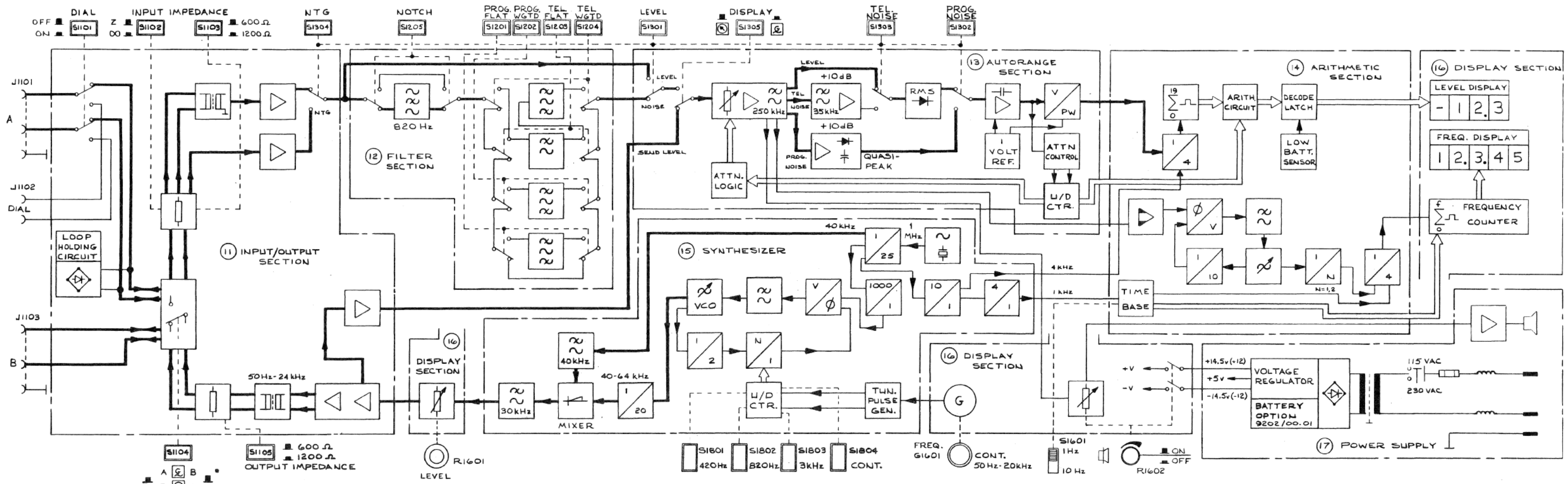

9202/03 PMG-3			
DESIGNATION BLOCK DIAGRAM	SERIES A··· DWG. NO. 9202-7500-10/BB	PAGE 1 OF 1	REV 0

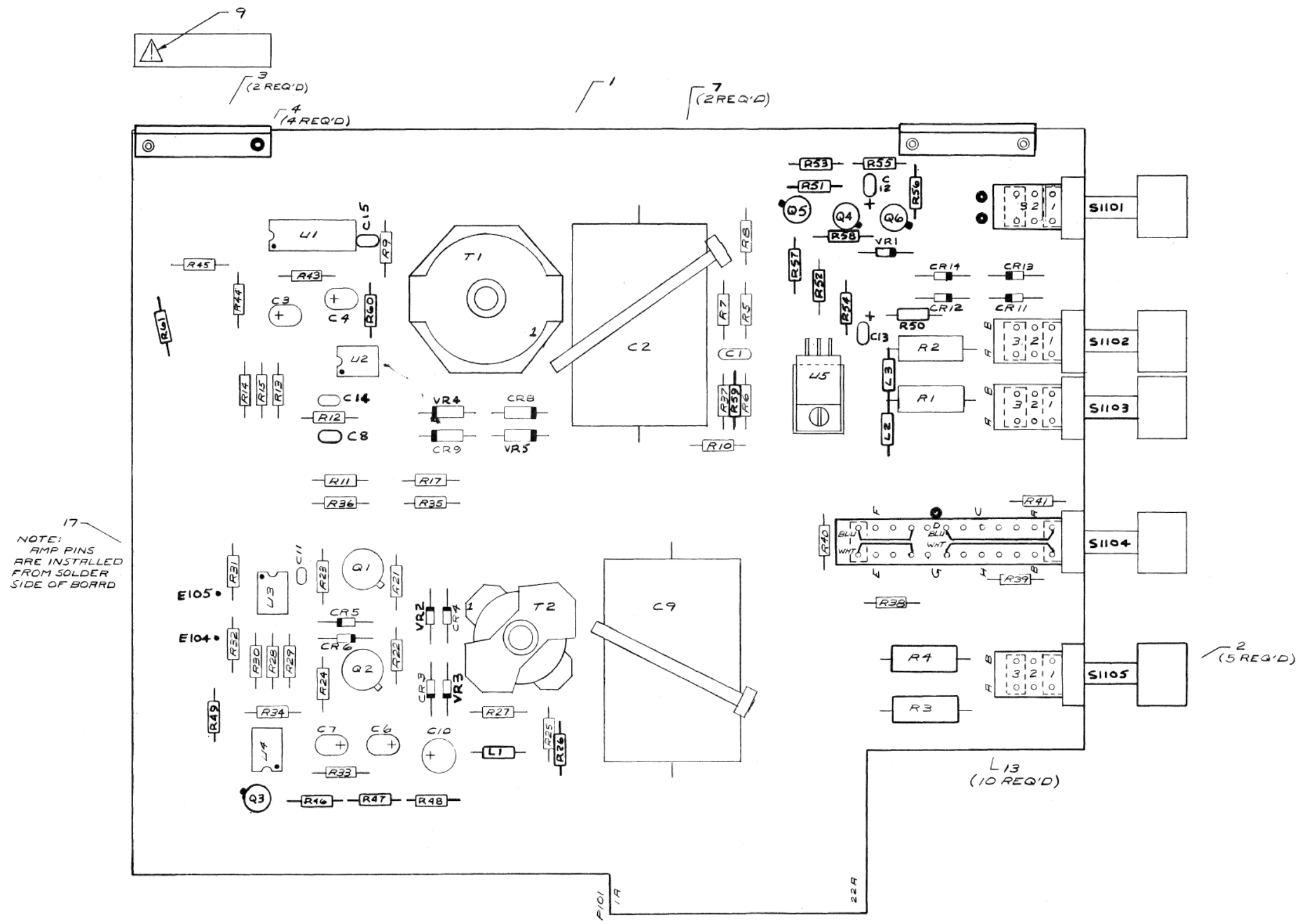

DESIGNATION: ASSEMBLY DWG I/O SECTION (11)	SERIES: A	DWG NO: 9202-7011-00	PAGE 1 OF 1	REV 1

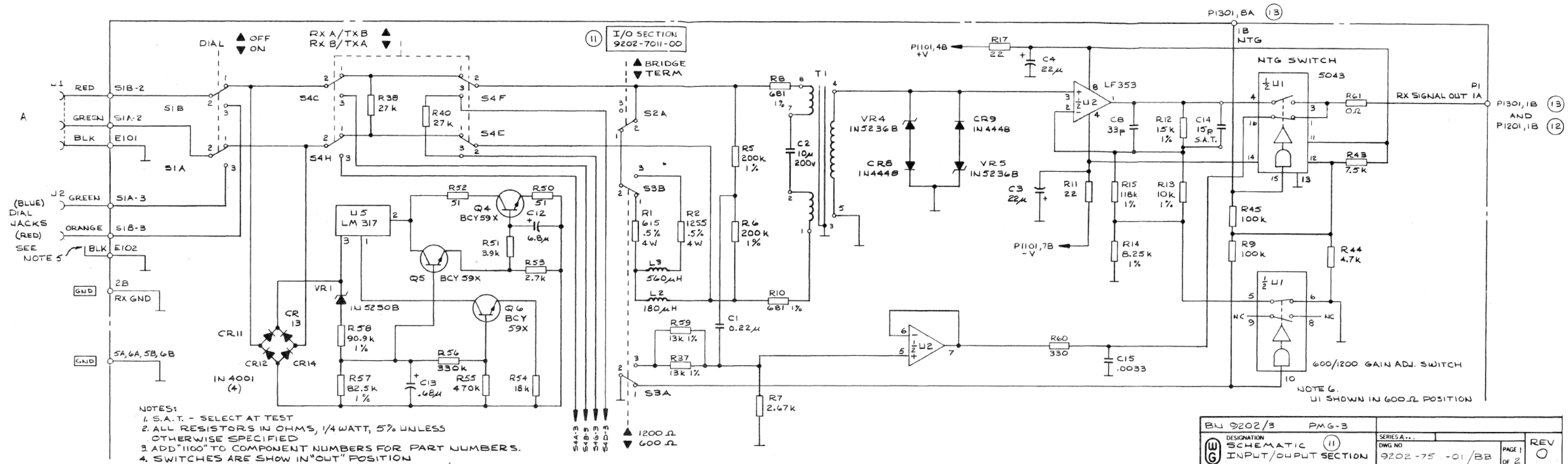
I/O SECTION 9202-7011-00
DIAL
OFF
ON
RX A/TX B
RX B/TX A
BRIDGE
TERM
P1301, 8A
1B
NTG
NTG SWITCH
5043
LF353
RX SIGNAL OUT 1A
P1301, 1B AND P1201, 1B
RED
GREEN
BLK
(BLUE) DIAL JACKS (RED) SEE NOTE 5
ORANGE
RX GND
5A, 6A, 5B, 6B
U5 LM 317
BCY 59X
IN 5230B
IN 4001 (4)
600/1200 GAIN ADJ. SWITCH
NOTE 6. U1 SHOWN IN 600Ω POSITION
1200Ω
600Ω
NOTES:
1. S.A.T. - SELECT AT TEST
2. ALL RESISTORS IN OHMS, 1/4 WATT, 5% UNLESS OTHERWISE SPECIFIED
3. ADD "1100" TO COMPONENT NUMBERS FOR PART NUMBERS.
4. SWITCHES ARE SHOW IN "OUT" POSITION
5. BLK WIRE (E102) IS TWISTED WITH ORG4 GREEN & IS NOT TERMINATED ON JACK END.
BN 9202/3 PMG-3
DESIGNATION SCHEMATIC INPUT/OUPUT SECTION
SERIES A...
DWG NO. 9202-75 -01/BB
PAGE 1 OF 2
REV

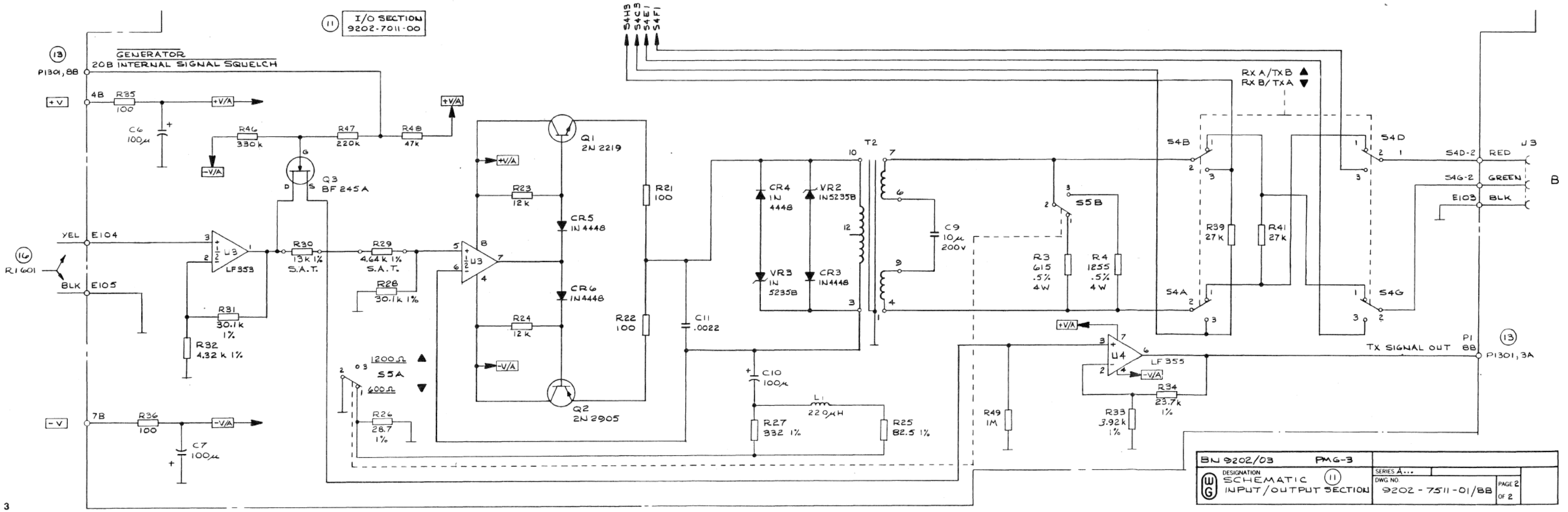
I/O SECTION 9202-7011-00
GENERATOR
20B INTERNAL SIGNAL SQUELCH
P1301, 8B
YEL
BLK
R1601
2N 2219
2N 2905
BF 245A
LF353
S.A.T.
RX A/TX B
RX B/TX A
TX SIGNAL OUT
P1301, 3A
J3
RED
GREEN
BLK
B
BN 9202/03 PMG-3
DESIGNATION SCHEMATIC INPUT/OUTPUT SECTION
SERIES A...
DWG NO. 9202-7511-01/BB
PAGE 2 OF 2

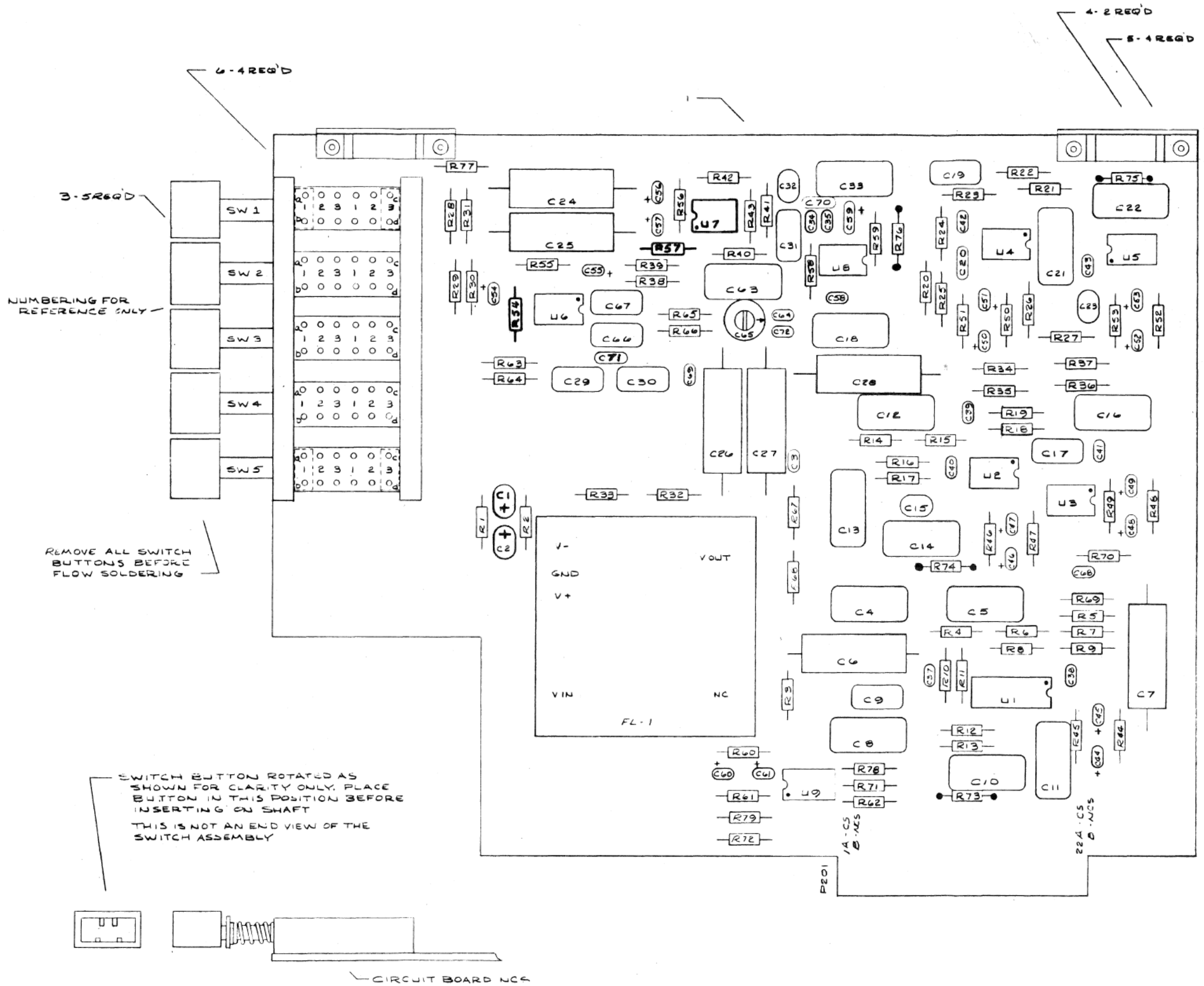

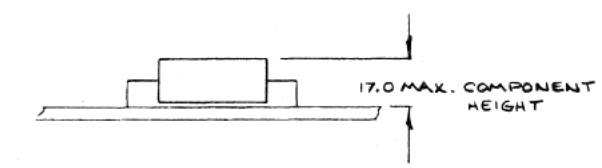

NOTE:

1. ADD "1200" TO ALL COMPONENT DESIGNATIONS, EXCEPT CONNECTOR, FOR PART NUMBER
2. DOT DENOTES PIN 1 ON I.C.'S

PL 9202-7012

PM G-3	
DESIGNATION: ASSEMBLY, FILTER BOARD	SERIES A... SCALE 2:1
	DWG NO 9202-7012-00/D PAGE 1 OF 1

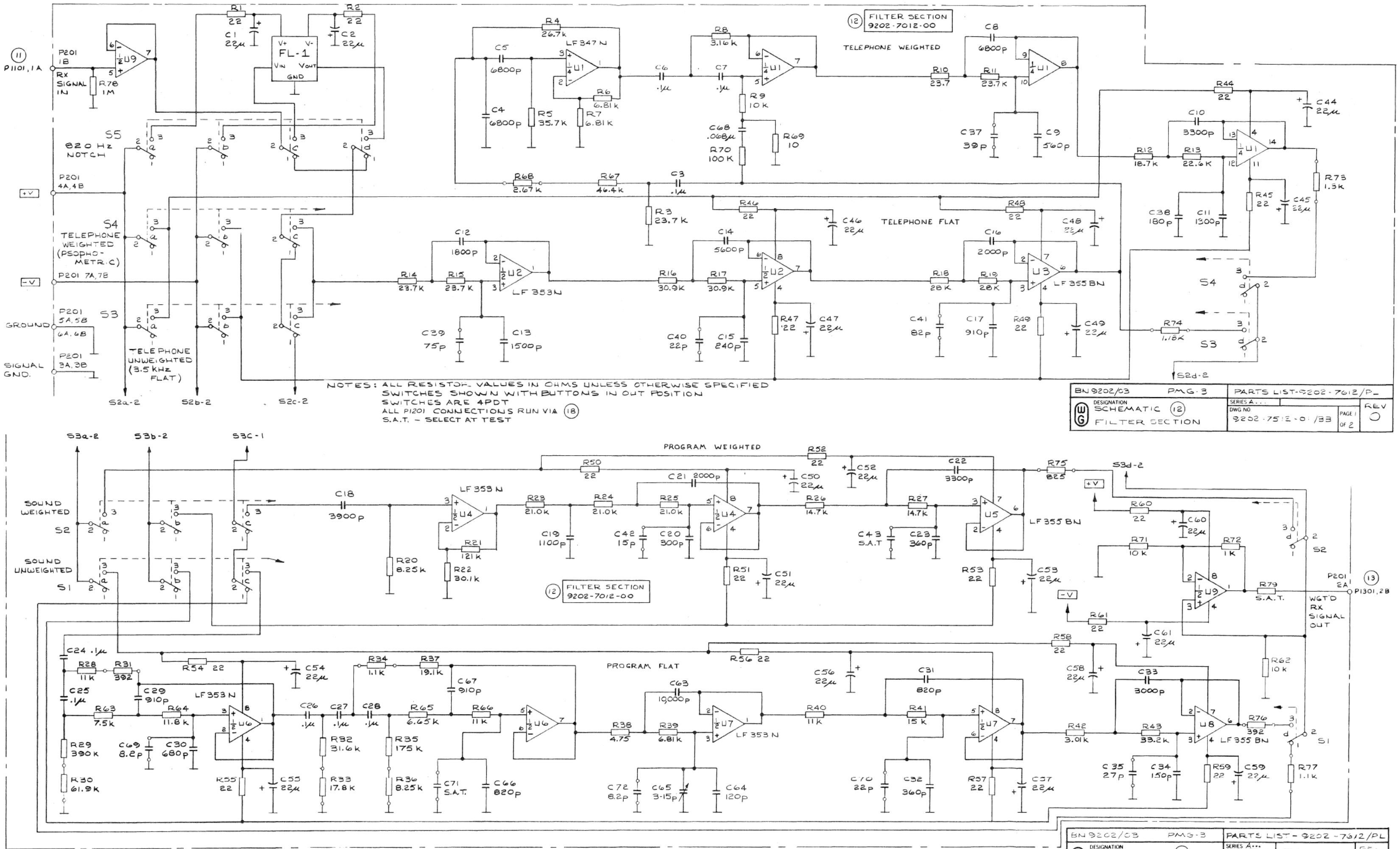
FILTER SECTION 9202-7012-00
TELEPHONE WEIGHTED
TELEPHONE FLAT
PROGRAM WEIGHTED
PROGRAM FLAT
820 Hz NOTCH
TELEPHONE WEIGHTED (PSOPHOMETRIC)
TELEPHONE UNWEIGHTED (3.5 kHz FLAT)
SOUND WEIGHTED
SOUND UNWEIGHTED
RX SIGNAL IN
GROUND
SIGNAL GND.
WGT'D RX SIGNAL OUT
FL-1
LF 347 N
LF 353 N
LF 355 BN
NOTES: ALL RESISTOR VALUES IN OHMS UNLESS OTHERWISE SPECIFIED
SWITCHES SHOWN WITH BUTTONS IN OUT POSITION
SWITCHES ARE 4PDT
ALL P1201 CONNECTIONS RUN VIA 18
S.A.T. - SELECT AT TEST
BN 9202/03 PMG-3
PARTS LIST-9202-7012/P_
DESIGNATION SCHEMATIC 12
FILTER SECTION
SERIES A...
DWG NO 9202-7512-01/BB
PAGE 1 OF 2
REV
BN 9202/03 PMG-3
PARTS LIST - 9202-7612/PL
DESIGNATION SCHEMATIC 12
FILTER SECTION
SERIES A...
DWG NO 9202-7512-01/BB
PAGE 2 OF 2
REV

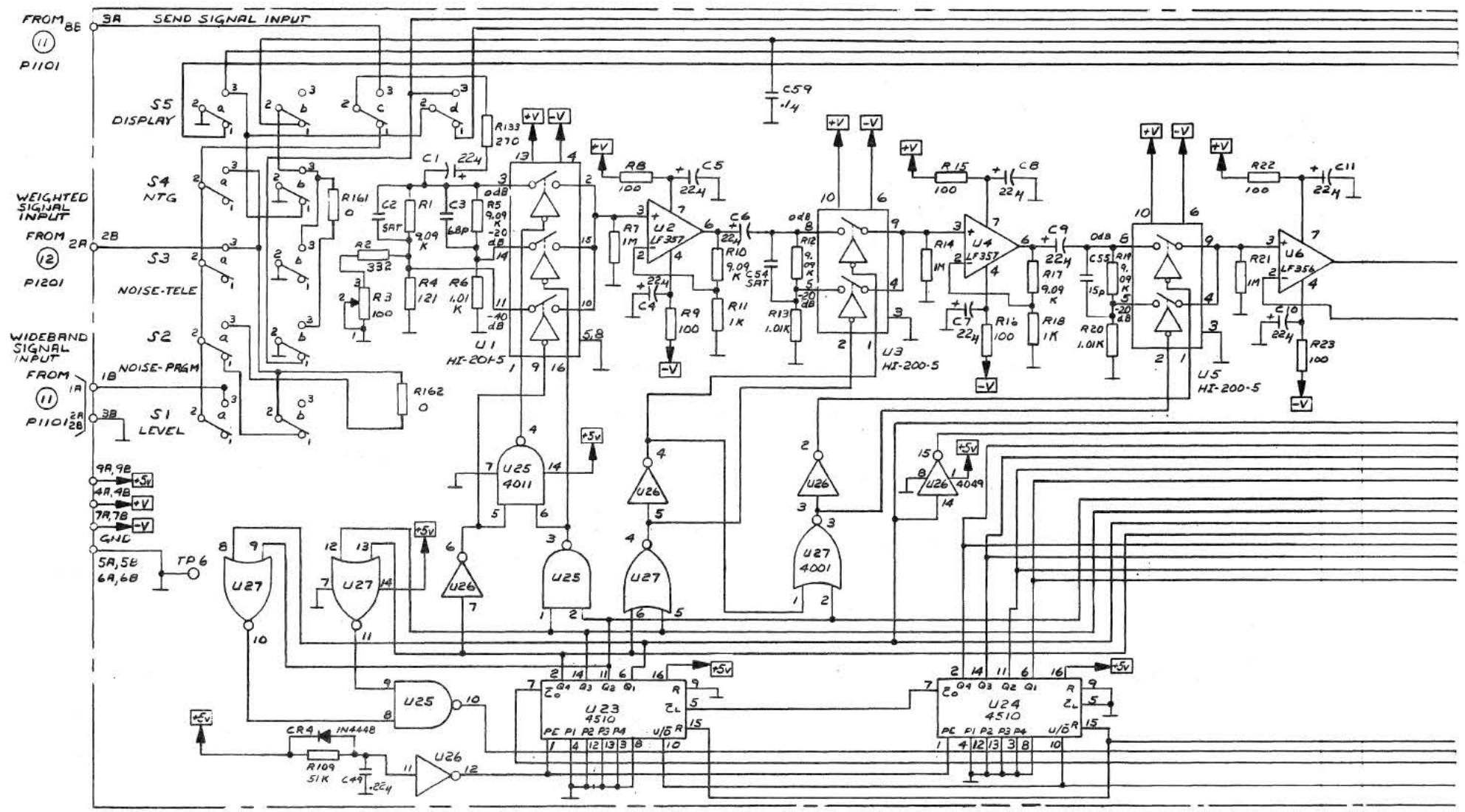

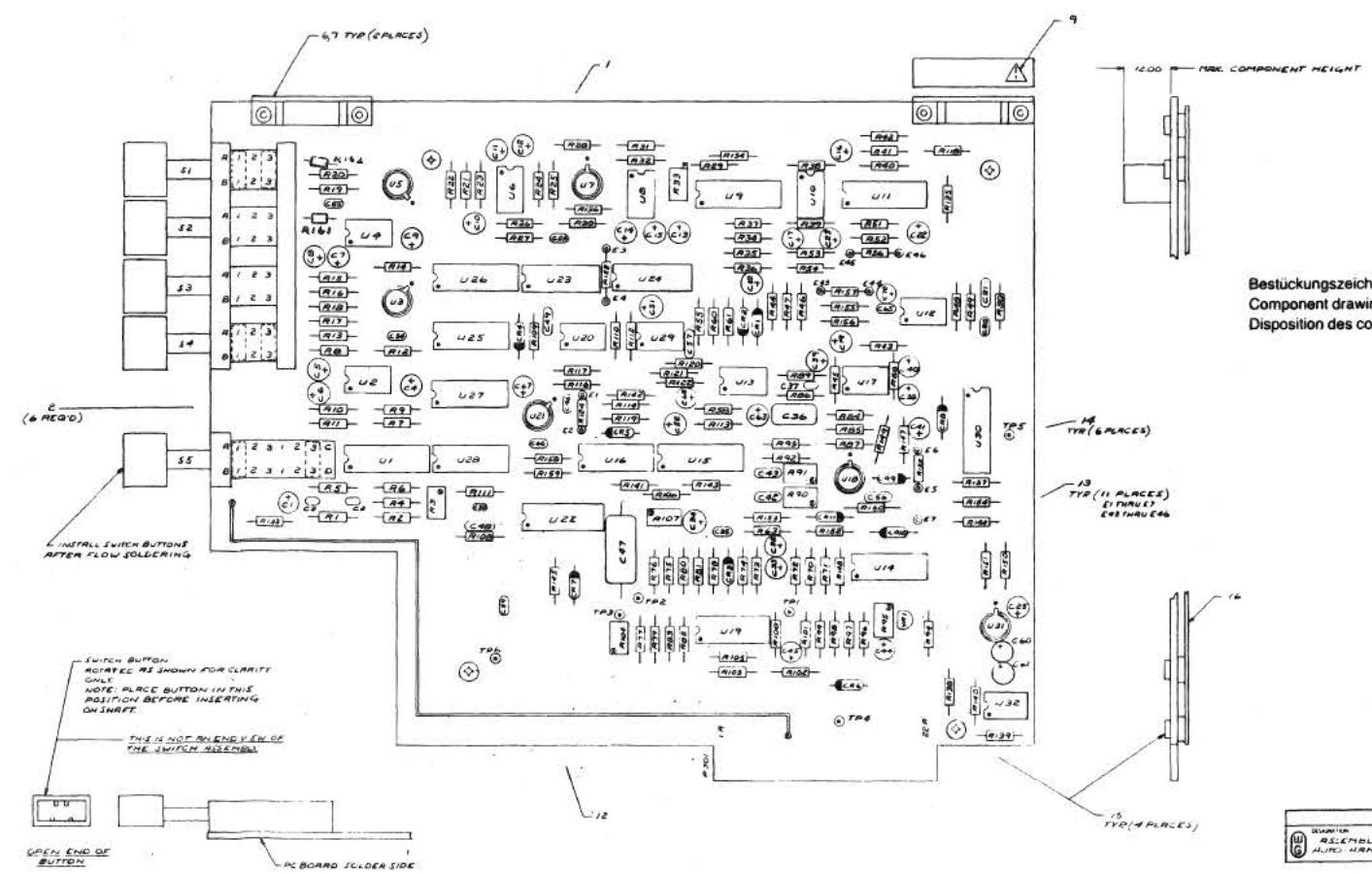

Bestückungszeichnung 1 : 1 siehe Seite
Component drawings are 1 : 1, see Page 8
Disposition des composants en grandeur réelle, voir page

QUANTUM ASSEMBLY DWG. AUDIO HANDLE BOARD	9202-7013-U--	REV 1

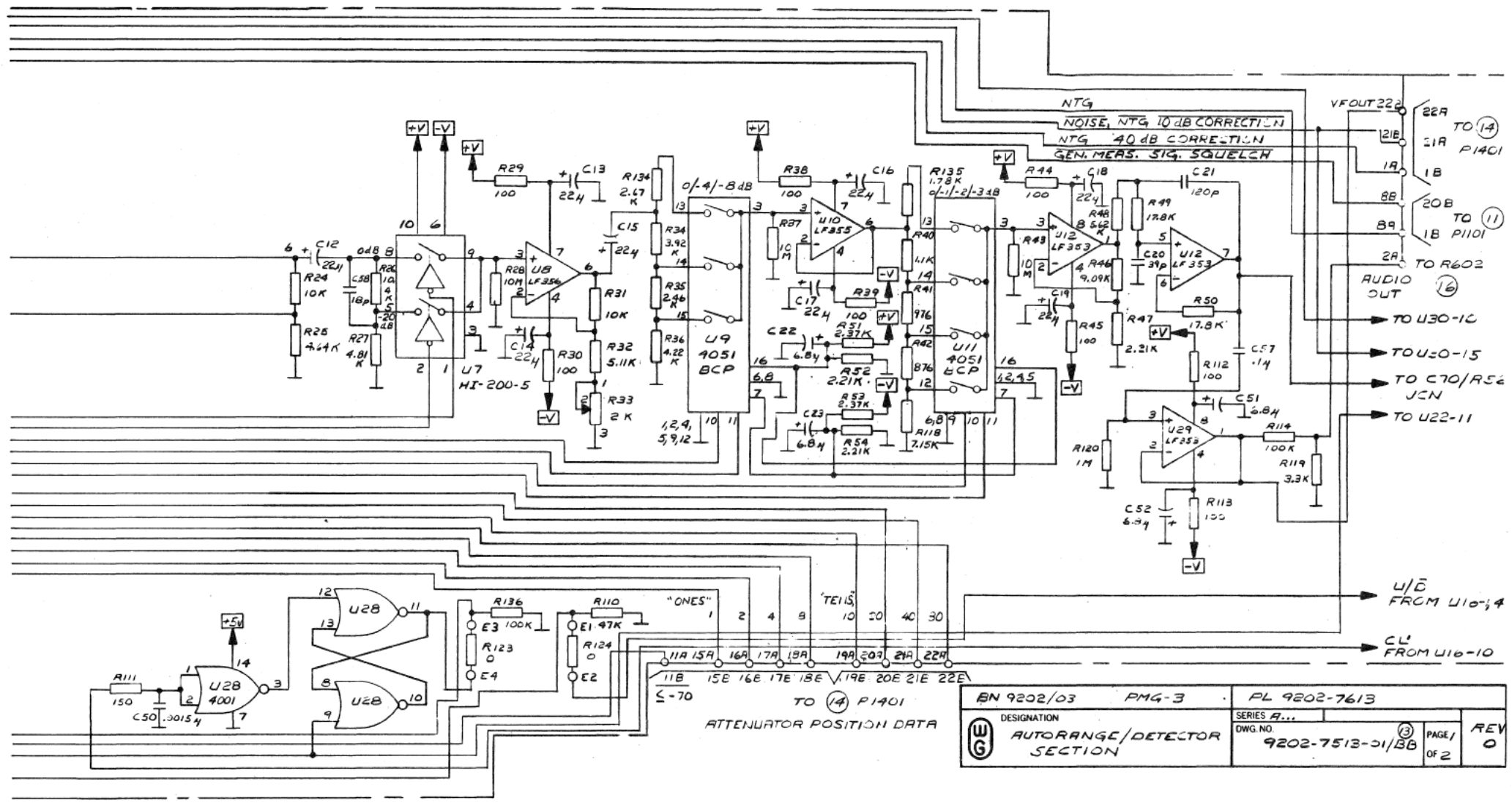
NTG
NOISE, NTG 10 dB CORRECTION
NTG 40 dB CORRECTION
GEN. MEAS. SIG. SQUELCH
VFOUT 22A
22A
12B
21A
1A
8B
8A
2A
TO (14) P1401
20B
1B
TO (11) P1101
TO R602 (16)
AUDIO OUT
TO U30-10
TO U20-15
TO C70/R56 JCN
TO U22-11
U/D FROM U10-14
CL' FROM U10-10
U7 HI-200-5
U8 LF356
U9 4051 BCP
U10 LF355
U11 4051 BCP
U12 LF353
U29 LF353
0/-4/-8 dB
0/-1/-2/-3 dB
"ONES"
"TENS"
U28 4001
TO (14) P1401
ATTENUATOR POSITION DATA
BN 9202/03 PMG-3
PL 9202-7613
DESIGNATION
AUTORANGE/DETECTOR SECTION
SERIES A...
DWG. NO. 9202-7513-01/3B
PAGE 1 OF 2
REV 0

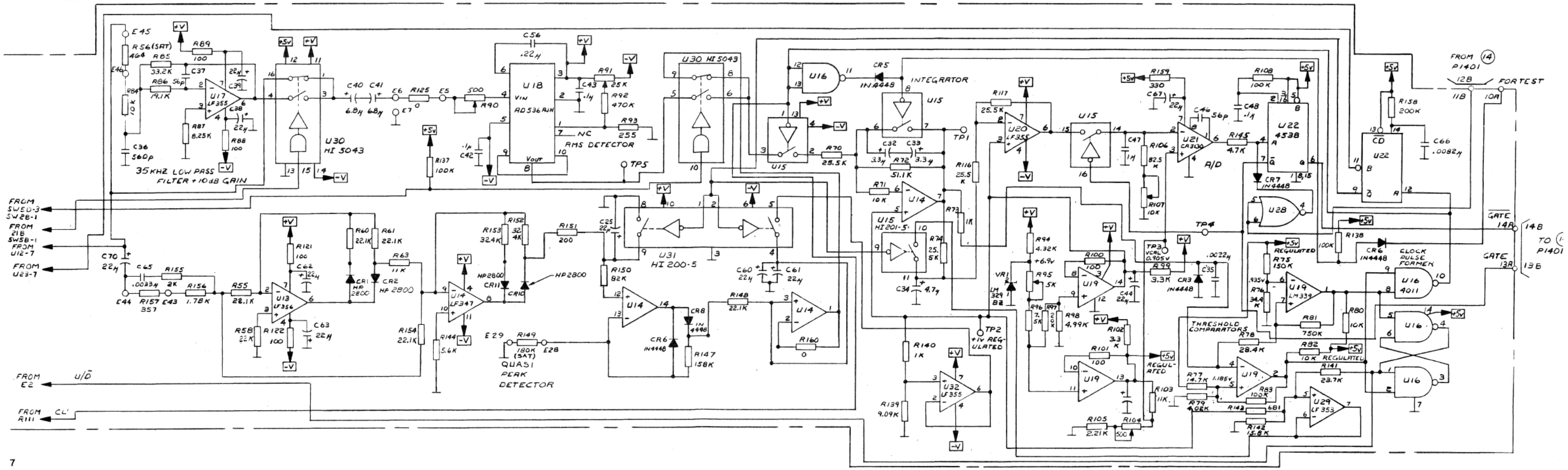
35 KHZ LOW PASS FILTER + 10 dB GAIN
U30 HI 5043
U18 AD536AJN
RMS DETECTOR
U31 HI 200-5
QUASI PEAK DETECTOR
INTEGRATOR
U15 HI 201-5
A/D
U22 4538
THRESHOLD COMPARATORS
CLOCK PULSE FORMER
FROM (14) P1401
FORTEST
GATE 14A
GATE 13A
TO (1) P1401
FROM SWED-3
FROM 21B SW5B-1
FROM U12-7
FROM U23-7
FROM E2 U/D
FROM R111 CL'

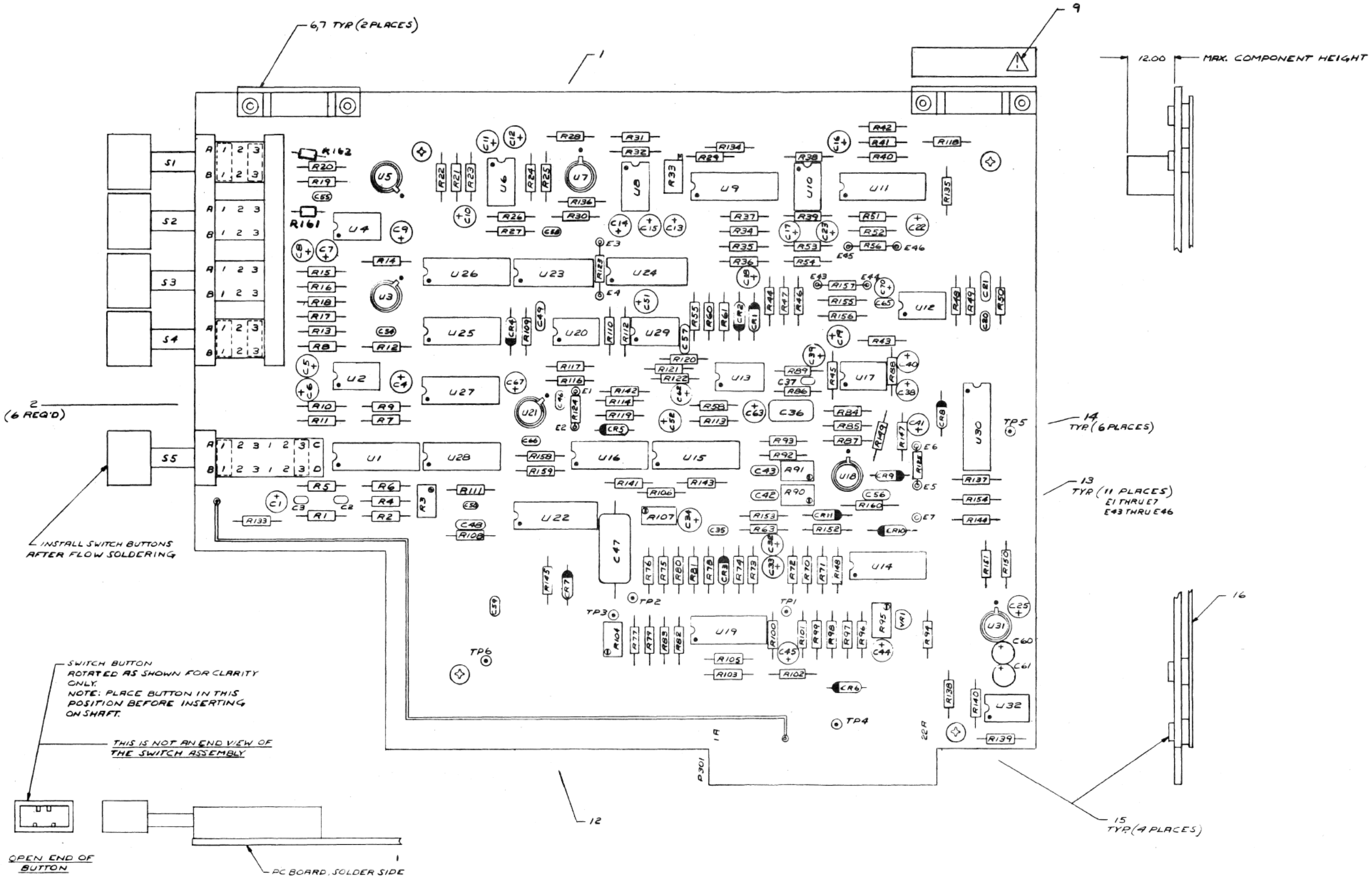

P/L 9202-7613

DESIGNATION ASSEMBLY DWG AUTO-RANGE BOARD	SERIES 9 DWG NO 9202-7013-00/2	PAGE 1 OF 1	REV 1

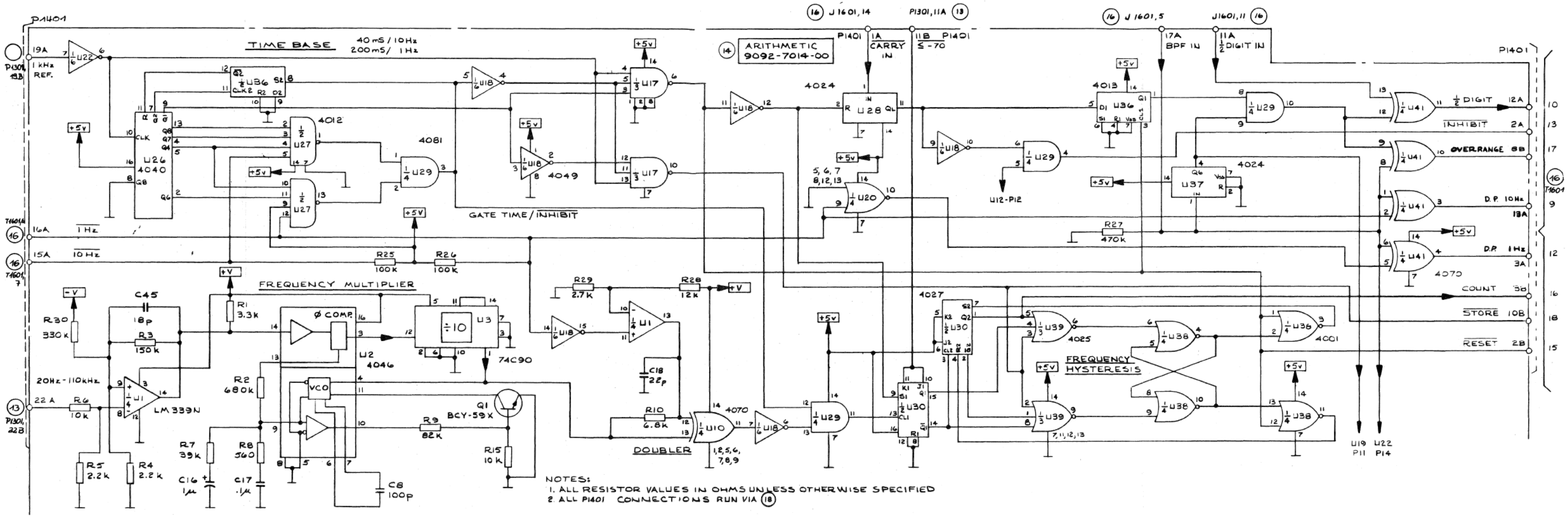

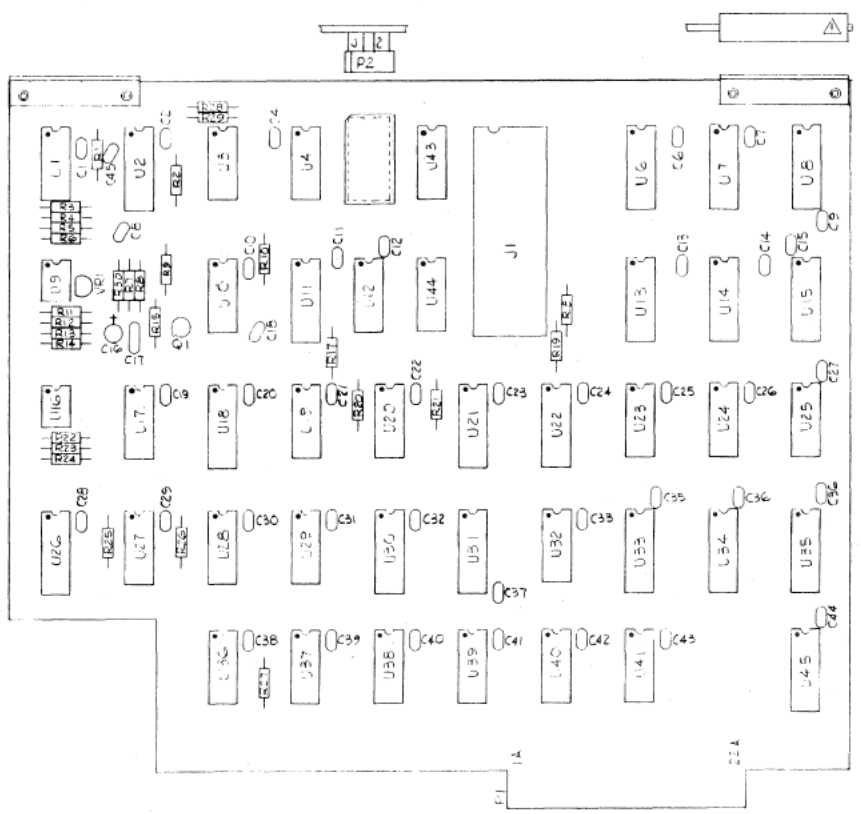

Bestückungszeichnung 1 : 1 siehe Seite
Component drawings are 1 : 1, see Page **11**
Disposition des composants en grandeur réelle, voir page

NOTES
1. COMPONENT DESIGNATOR SHOWN FOR REF ONLY - NOT MARKED ON COMPONENTS.
2. ADD "1400" TO ALL REF DESIGNATORS.
3. DOT ON ICS DENOTES PIN 1

BN 9202/3	PMG-3	
DESIGNATION ASSY ARITHMETIC BD	SERIAL NO. 9202-7014-00	PAGE 1 OF 1

BN 9202/3	PMG-3	PARTS LIST - 9202-7614/PL	
DESIGNATION SCHEMATIC ARITHMETIC SECTION (14)	SERIES A... DWG NO. 9202-7514-01/BB	PAGE 1 OF 3	REV

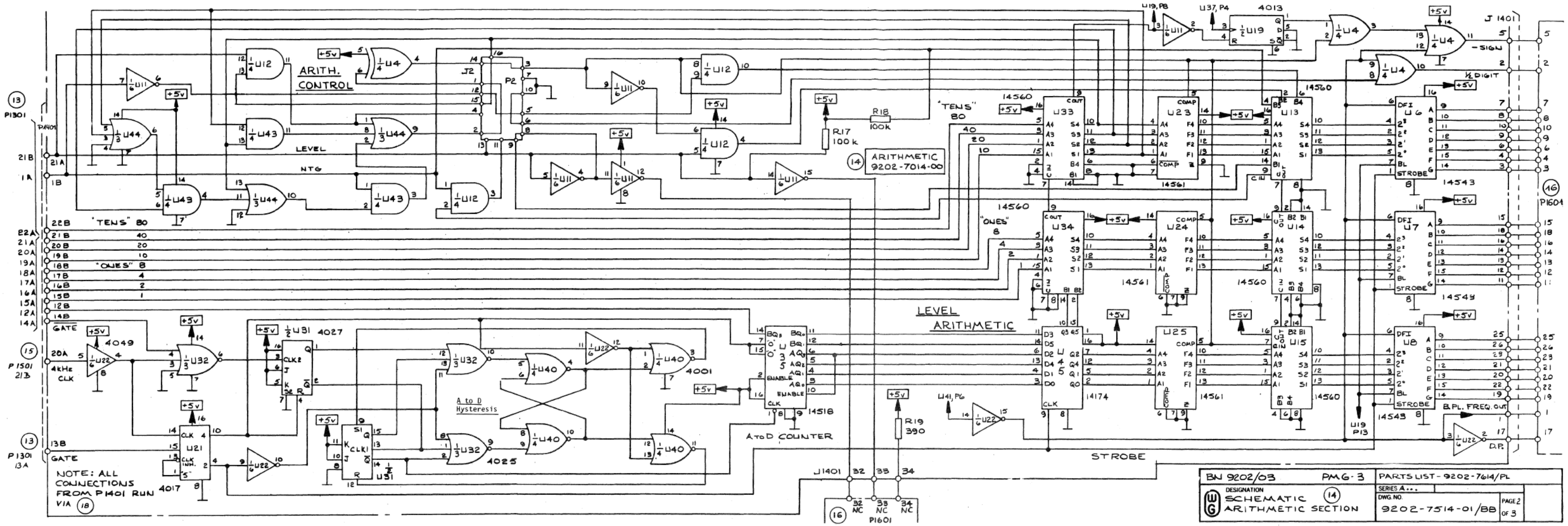
ARITH. CONTROL
LEVEL
NTG
"TENS" 80
"ONES" 8
GATE
4049
4027
4017
4025
4001
4013
4518
A to D Hysteresis
A to D COUNTER
LEVEL ARITHMETIC
STRONE
ARITHMETIC 9202-7014-00
NOTE: ALL CONNECTIONS FROM P1401 RUN VIA
J 1401
P1601
- SIGN
½ DIGIT
B.PL. FREQ. OUT
D.P.
BN 9202/03
PMG-3
PARTS LIST - 9202-7614/PL
DESIGNATION
SCHEMATIC ARITHMETIC SECTION
SERIES A...
DWG. NO.
9202-7514-01/BB
PAGE 2 OF 3

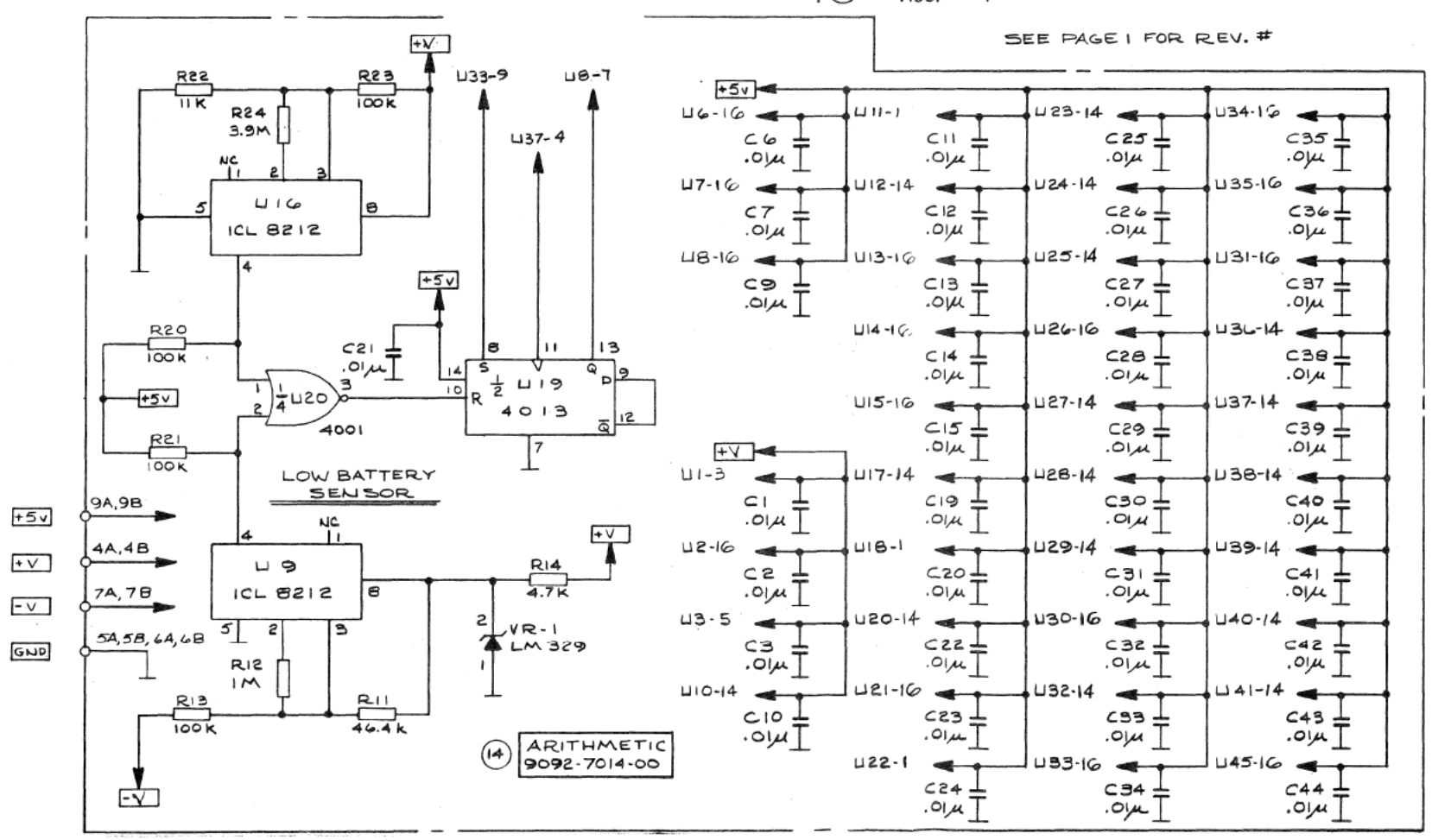
SEE PAGE 1 FOR REV. #
LOW BATTERY SENSOR
ICL 8212
4013
4001
ARITHMETIC 9092-7014-00
BN 9202/03
PMG-3
PARTS LIST - 9202-7614/PL
DESIGNATION
SCHEMATIC ARITHMETIC SECTION
SERIES A...
DWG. NO.
9202-7514-01/B
PAGE 3 OF 3

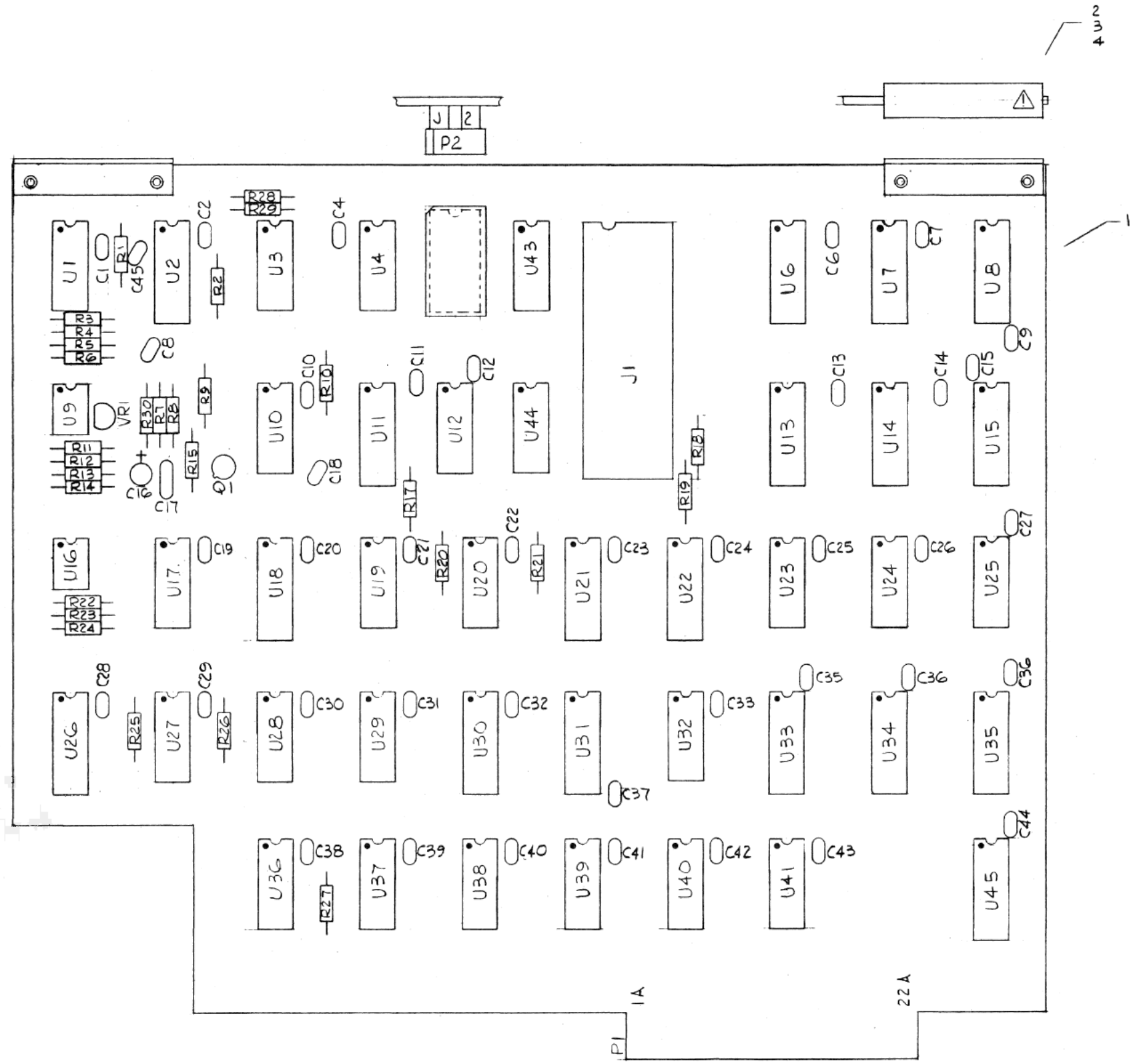

NOTES
1. COMPONENT DESIGNATOR SHOWN FOR REF. ONLY - NOT MARKED ON COMPONENTS.
2. ADD "1400" TO ALL REF DESIGNATORS.
3. DOT ON IC'S DENOTES PIN 1

BN 9202/03	PMG-3
DESIGNATION ASSY, ARITHMETIC BRD	SERIES / DWG NO. 9202-7014-00 PAGE 1 OF 1

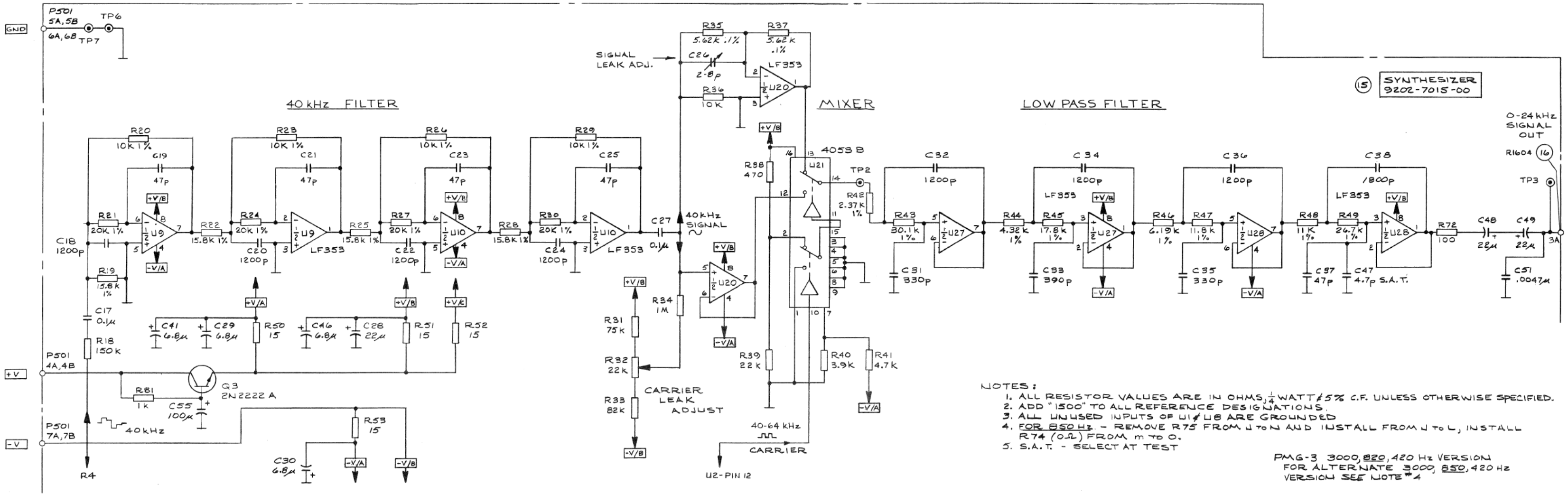

NOTES:
1. ALL RESISTOR VALUES ARE IN OHMS, 1/4 WATT ±5% C.F. UNLESS OTHERWISE SPECIFIED.
2. ADD "1500" TO ALL REFERENCE DESIGNATIONS.
3. ALL UNUSED INPUTS OF U1 & U8 ARE GROUNDED
4. FOR 850 Hz. - REMOVE R75 FROM J TO N AND INSTALL FROM J TO L, INSTALL R74 (0Ω) FROM m TO O.
5. S.A.T. - SELECT AT TEST

PMG-3 3000, 820, 420 Hz VERSION
FOR ALTERNATE 3000, 850, 420 Hz
VERSION SEE NOTE #4

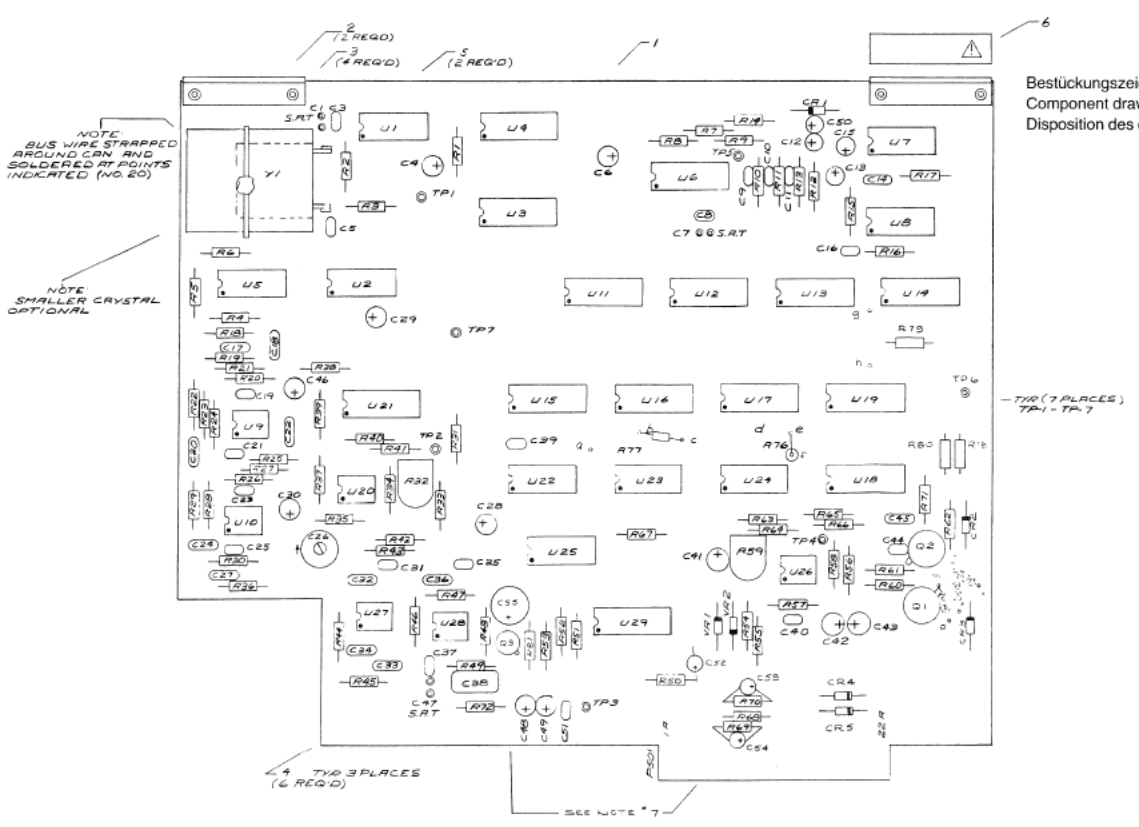

Bestückungszeichnung 1 : 1 siehe Seite
Component drawings are 1 : 1, see Page **15**
Disposition des composants en grandeur réelle, voir page

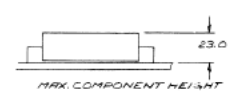

NOTES:
1. S.A.T DENOTES SELECT AT TEST COMPONENT
2. COMPONENT DESIGNATORS SHOWN FOR REFERENCE ONLY - NOT MARKED ON COMPONENTS.
3. ADD "1500" TO COMPONENT DESIGNATORS EXCEPT CONNECTOR FOR PART NUMBERS
4. S.A.T DENOTES "SELECT AT TEST" COMPONENT
5. COMPONENT LOCATIONS
FOR PMG-3 (3000 Hz, 820 Hz, 420 Hz) OPERATION:
INSTALL R77 IN POSITION b-c
INSTALL R76 IN POSITION a-f
INSTALL R75 IN POSITION J-N
R74 IS NOT USED

FOR PMG-3, (3000 Hz - 850 Hz - 420 Hz) OPERATION
INSTALL R77 IN POSITION b-c
INSTALL R76 IN POSITION a-f
INSTALL R75 IN POSITION J-L
INSTALL R74 IN POSITION m-o

6. PADS MARKED g & n ARE NOT USED

7. THE FOLLOWING COMPONENTS ARE HARD-WIRED TO THIS BOARD FOR SLA-65 A & B. (REFER TO SCHEMATIC No. 9202-7015-00.) - C52, C53, C54, C55, R81 & G2

PL 9202-7615

BN 9202/3 PMG-3	SERIES A...		
DESIGNATION ASSEMBLY SYNTHESIZER BD	DWG. NO. 9202-7515-00/0	PAGE 1 OF 1	REV 0

BN 9202/03 PMG-3	PARTS LIST 9202-7615/PL		
DESIGNATION SCHEMATIC SYNTHESIZER (15)	SERIES A...		REV
	DWG. NO. 9202-7515-01/BB	PAGE 1 OF 3	0

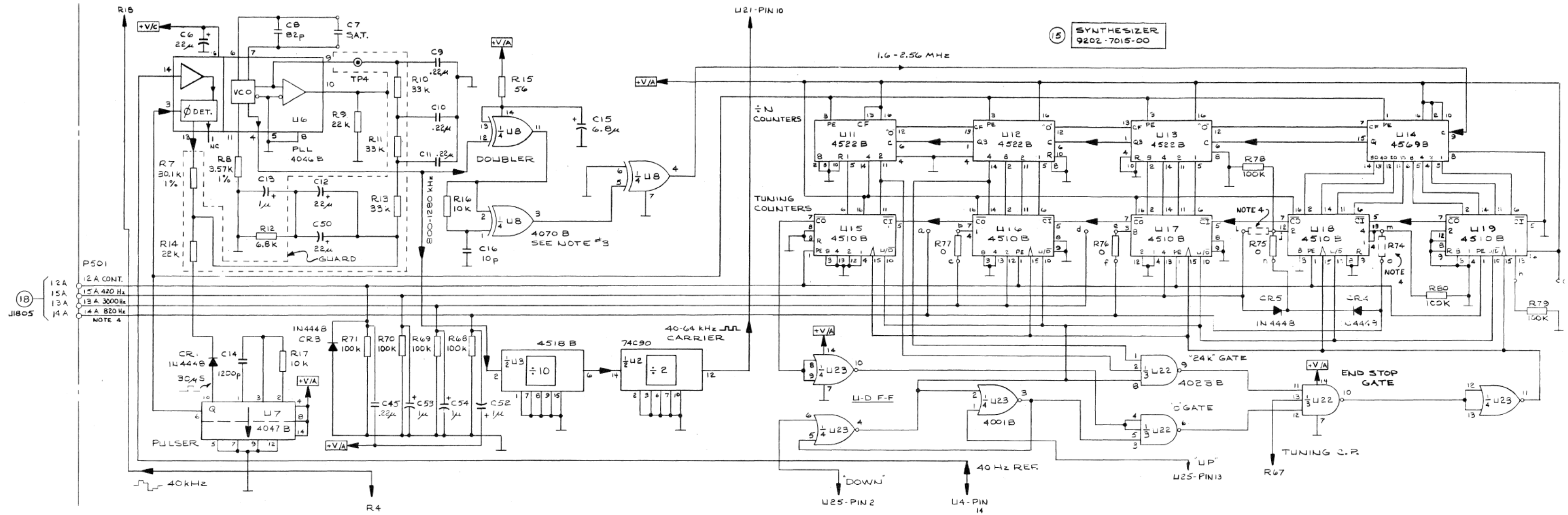

BN9202/03		PARTS LIST 9202-7015/PL
DESIGNATION SCHEMATIC SYNTHESIZER (15)		SERIES A--- DWG NO. 9202-7015-01/32 PAGE 2 OF 3

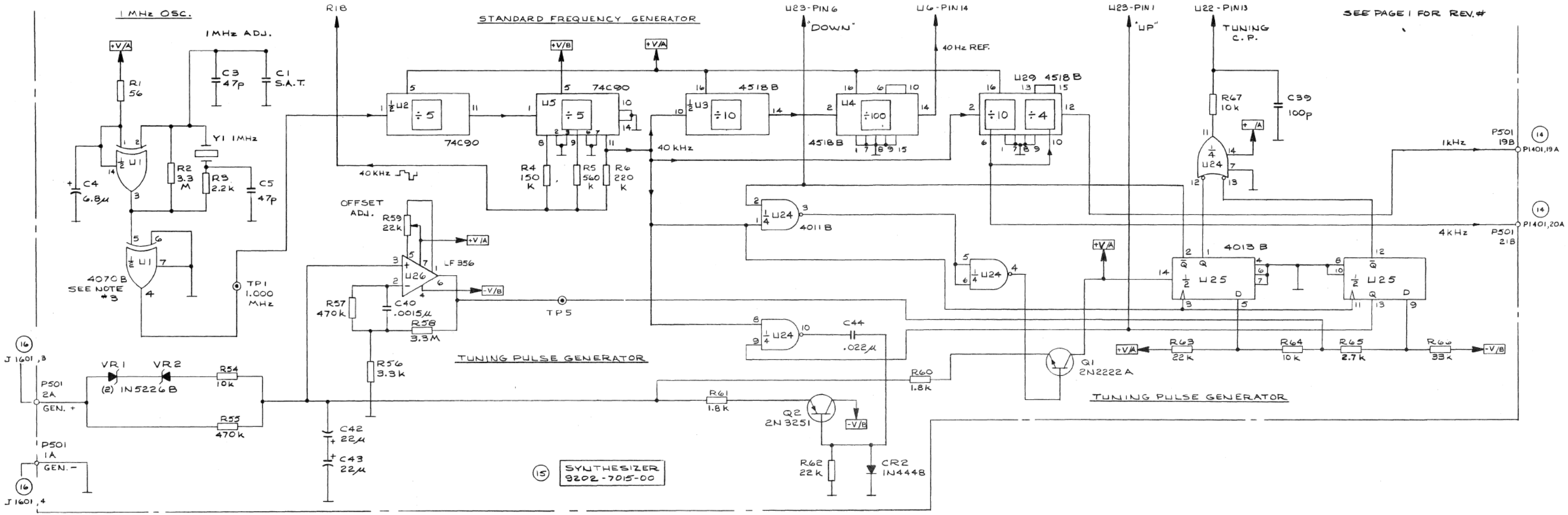

BN 9202/03 PMG-3	PARTS LIST 9202-7615/PL	
DESIGNATION SCHEMATIC SYNTHESIZER (15)	SERIES A... DWG NO. 9202-7515-01/BB PAGE 3 OF 3	REV 0

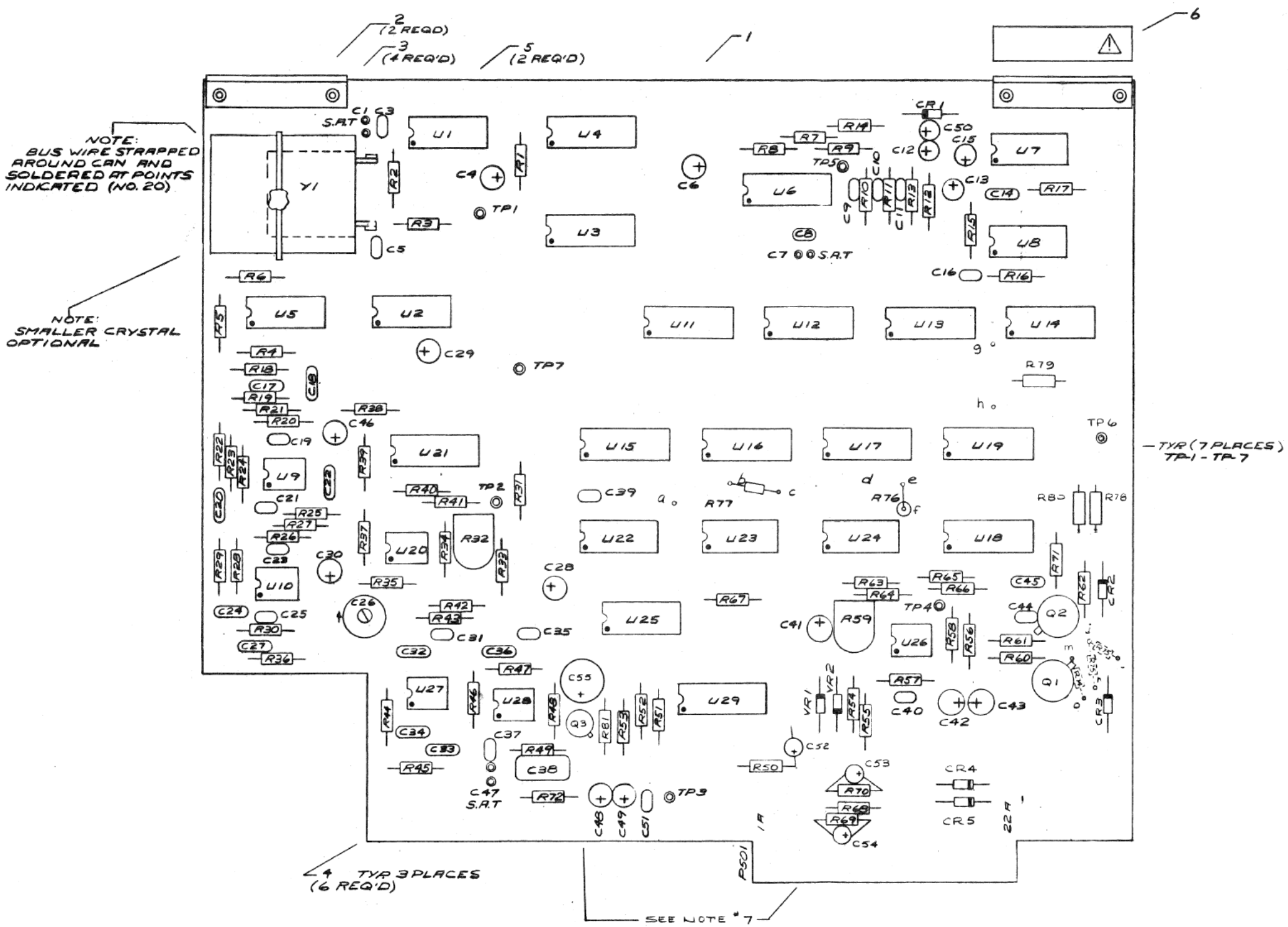

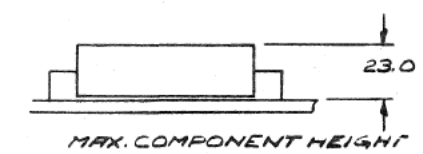

NOTES:

1. S.A.T DENOTES SELECT AT TEST COMPONENT.
2. COMPONENT DESIGNATORS SHOWN FOR REFERENCE ONLY – NOT MARKED ON COMPONENTS.
3. ADD "1500" TO COMPONENT DESIGNATORS EXCEPT CONNECTOR FOR PART NUMBERS
4. S.A.T. DENOTES "SELECT AT TEST" COMPONENT
5. COMPONENT LOCATIONS

   FOR PMG-3, (3000 Hz-820 Hz-420 Hz) OPERATION:
   - INSTALL R77 IN POSITION b-c
   - INSTALL R76 IN POSITION e-f
   - INSTALL R75 IN POSITION j-n
   - R74 IS NOT USED

   FOR PMG-3, (3000 Hz-850 Hz-420 Hz) OPERATION
   - INSTALL R77 IN POSITION b-c
   - INSTALL R76 IN POSITION e-f
   - INSTALL R75 IN POSITION j-L
   - INSTALL R74 IN POSITION m-o

6. PADS MARKED g & h ARE NOT USED

7. THE FOLLOWING COMPONENTS ARE HARD-WIRED TO THE BOARD FOR SERIES A & B. (REFER TO SCHEMATIC No. 9202-7015-01.) – C52, C53, C54, C55, R81 & Q3

PL 9202-7615

BN 9202/3 PMG-3			
DESIGNATION: ASSEMBLY SYNTHESIZER BD	SERIE A... DWG NO 9202-7515-00/D	PAGE 1 OF 1	REV 0

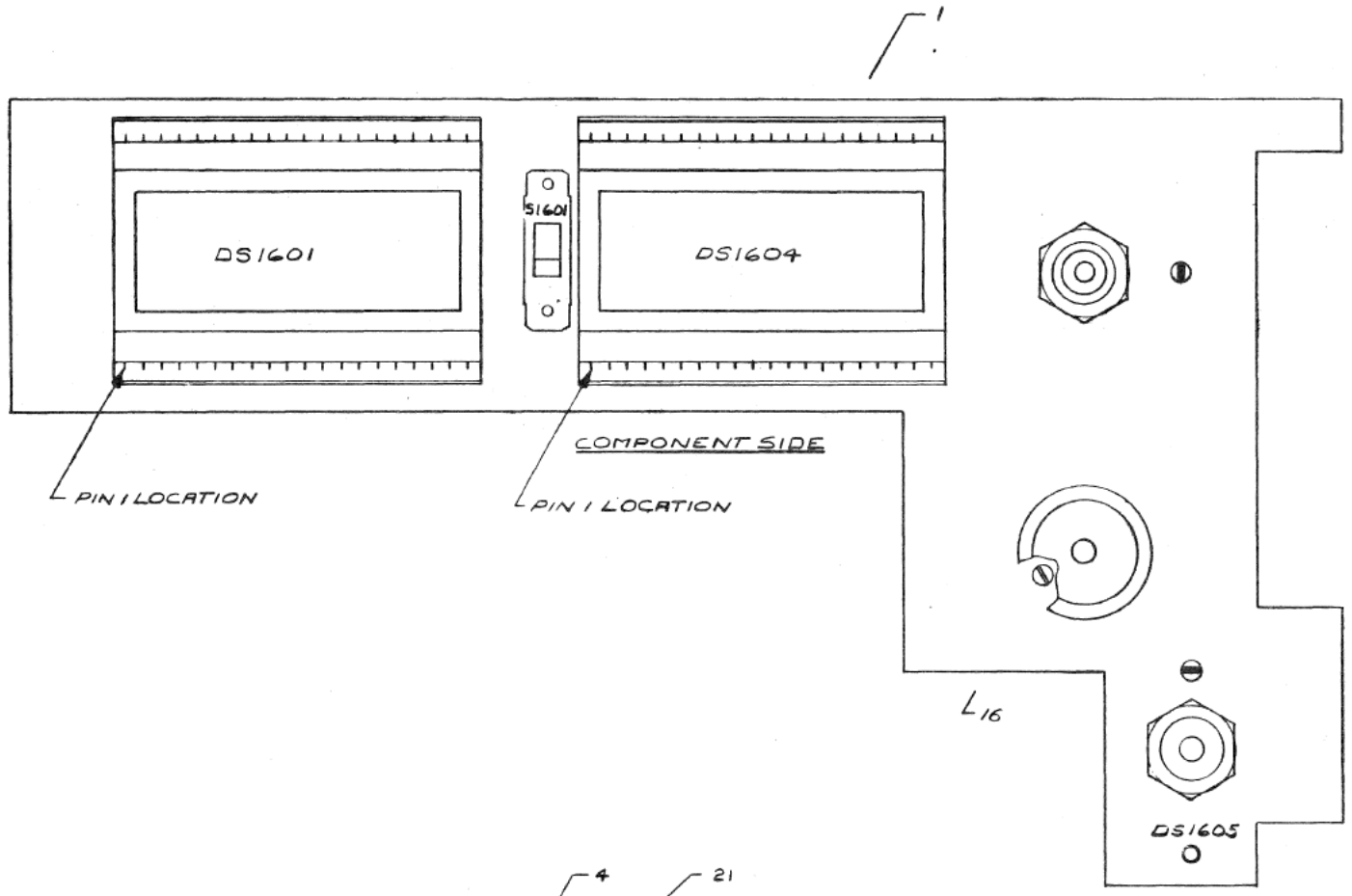

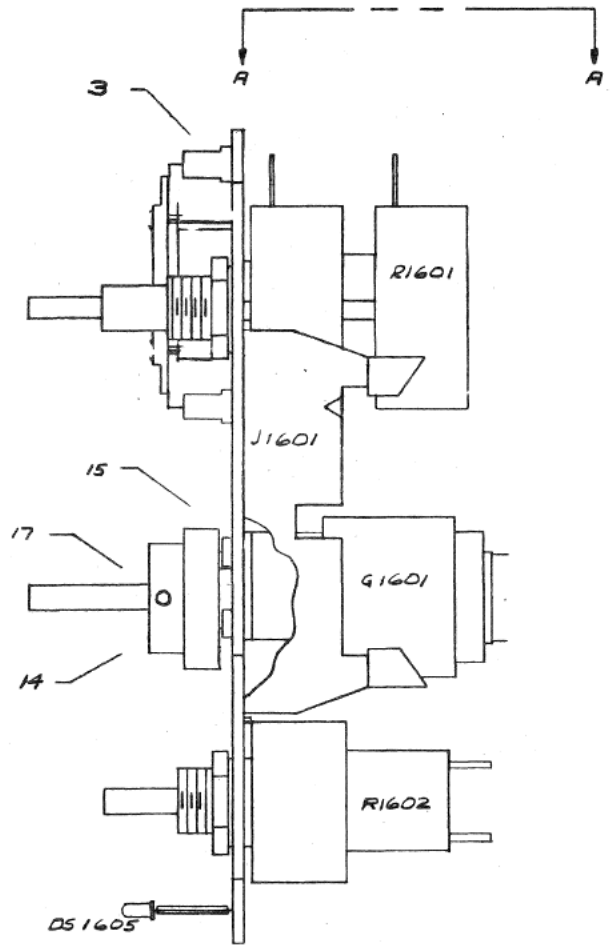

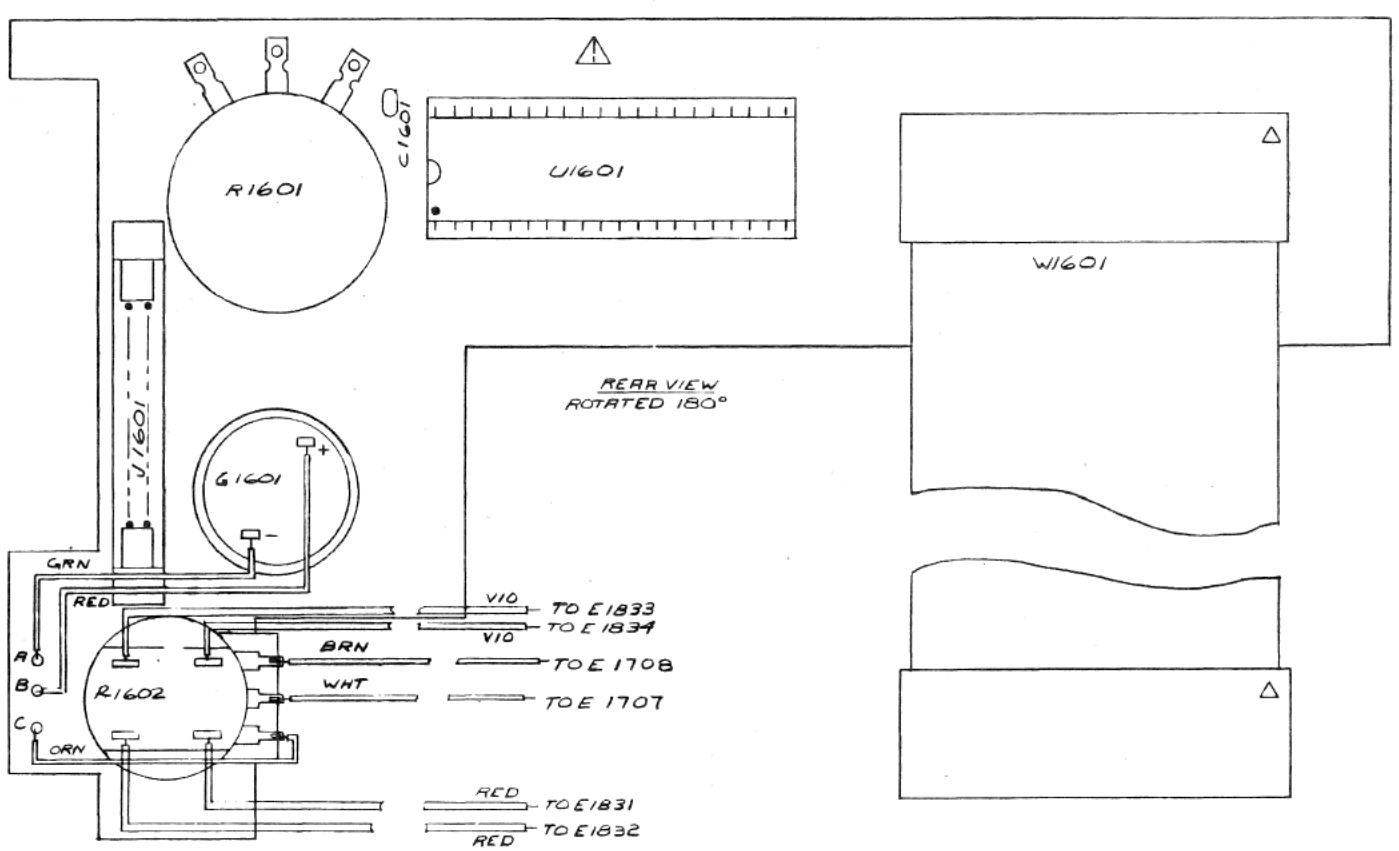

NOTE:
1. COMPONENT DESIGNATORS SHOWN FOR REFERENCE ONLY - NOT MARKED ON COMPONENTS

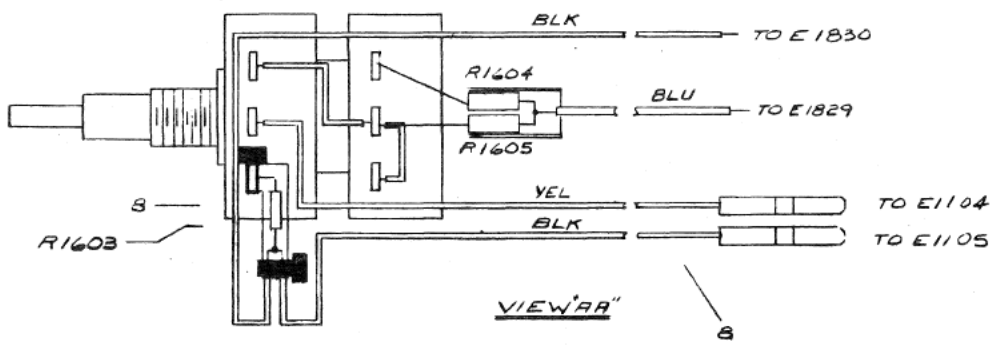

BN 9202/03	PARTS LIST 9202-7616/1L	
DESIGNATION: ASSEMBLY DWG DISPLAY BOARD	SERIES: 8 / DWG NO: 9202-7616-00/0	PAGE 1 OF 1 / REV

NOTES
1. UNLESS OTHERWISE SPECIFIED, ALL RESISTORS ARE IN OHMS. 5%, 1/4 WATT.

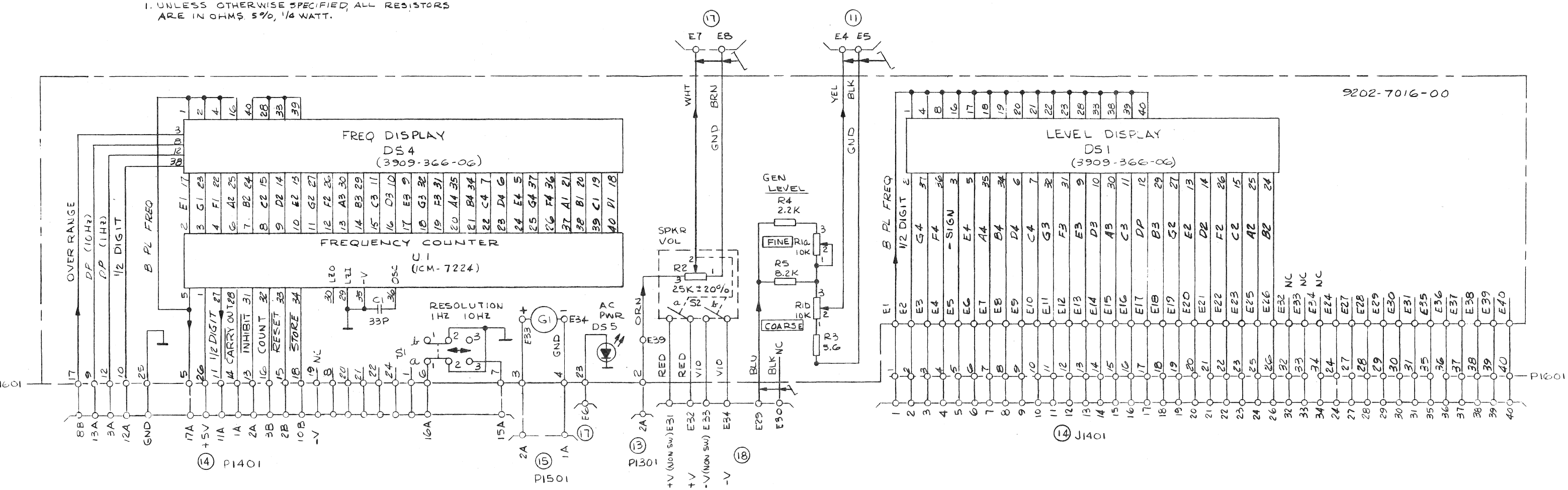

BN 9202/03 PMG-3	PARTS LIST 9202-7616/PL	
DESIGNATION SCHEMATIC (16) DISPLAY SECTION	SERIES A... DWG. NO. 9202-7516-01/BB	PAGE 1 OF 1 REV 0

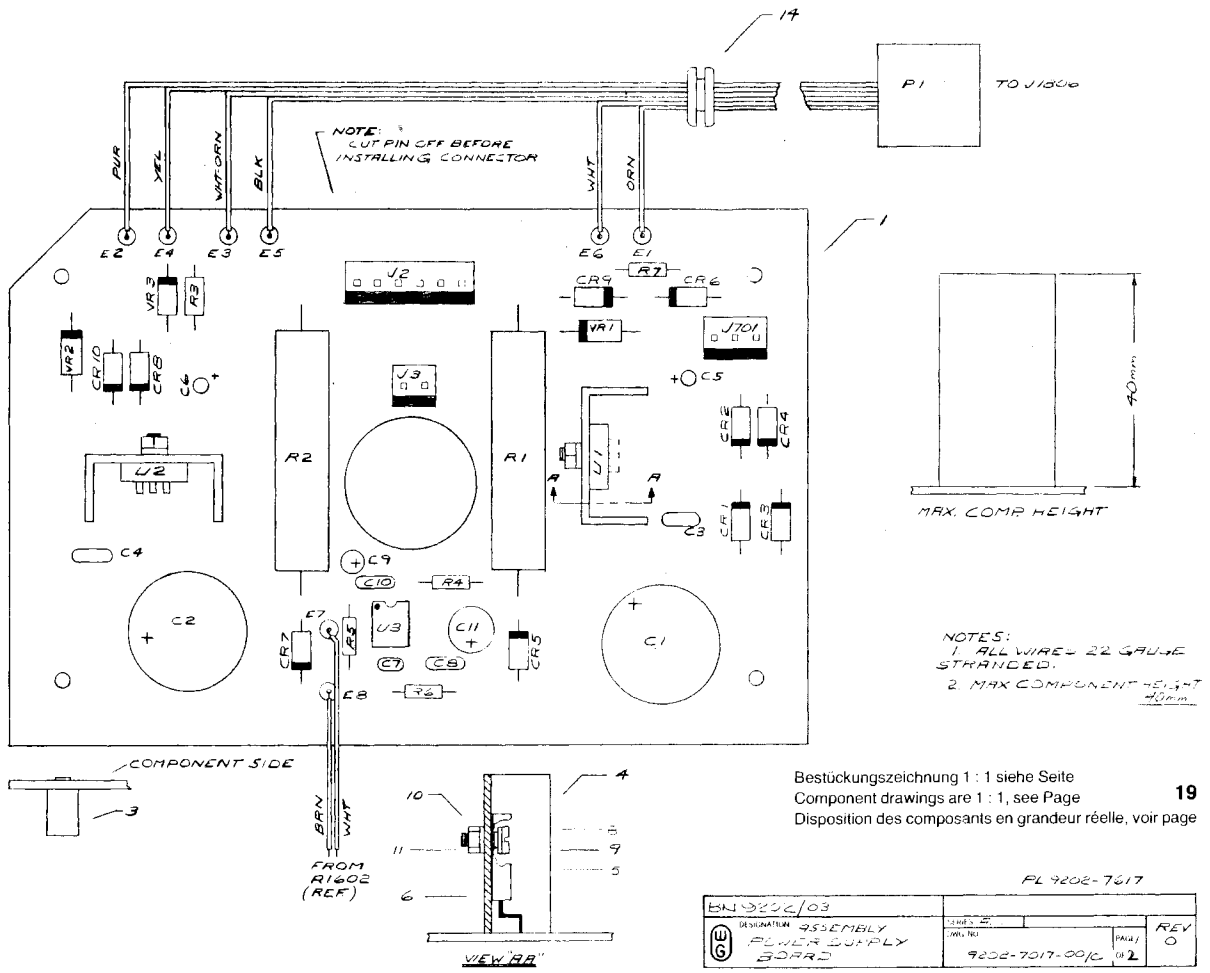

Bestückungszeichnung 1 : 1 siehe Seite
Component drawings are 1 : 1, see Page **19**
Disposition des composants en grandeur réelle, voir page

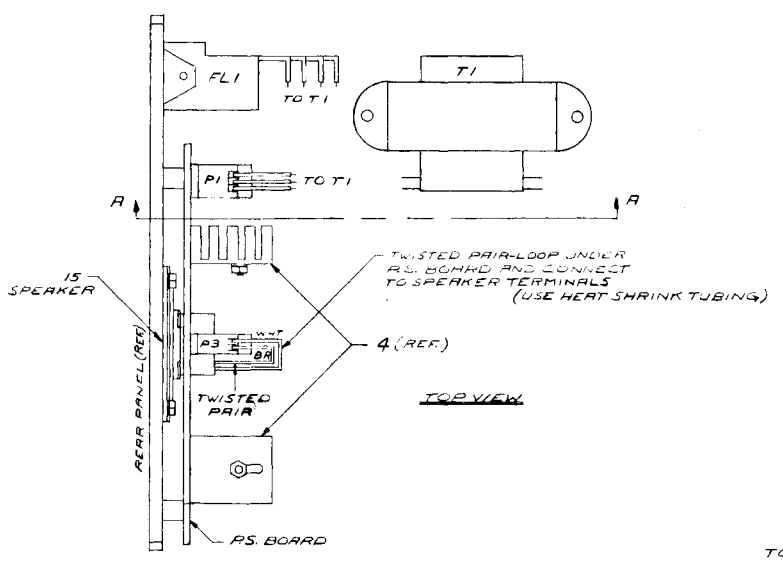

Bestückungszeichnung 1 : 1 siehe Seite
Component drawings are 1 : 1, see Page **20**
Disposition des composants en grandeur réelle, voir page

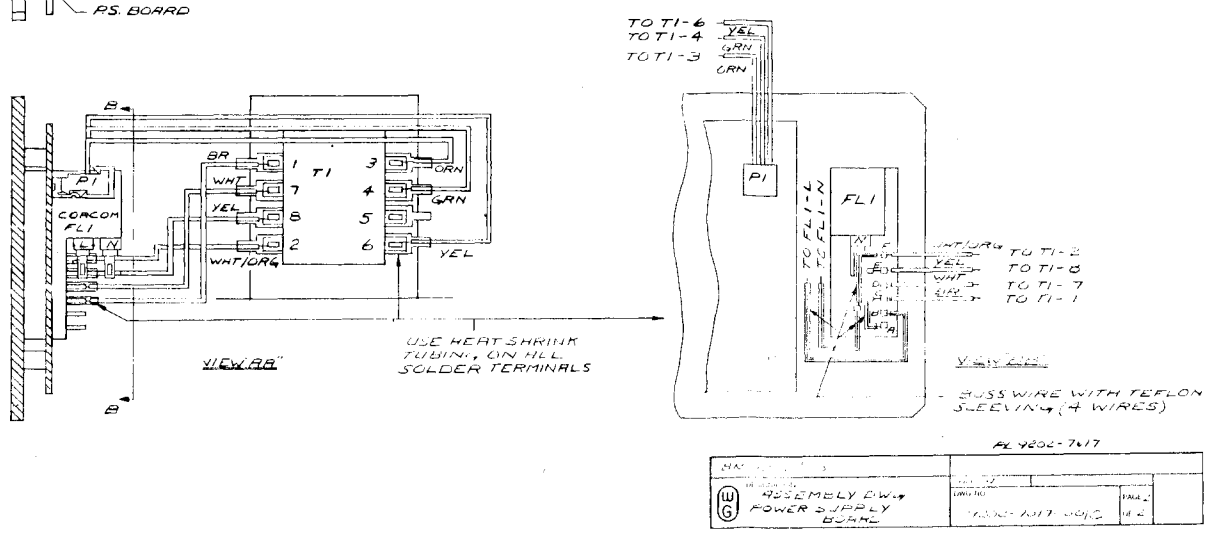

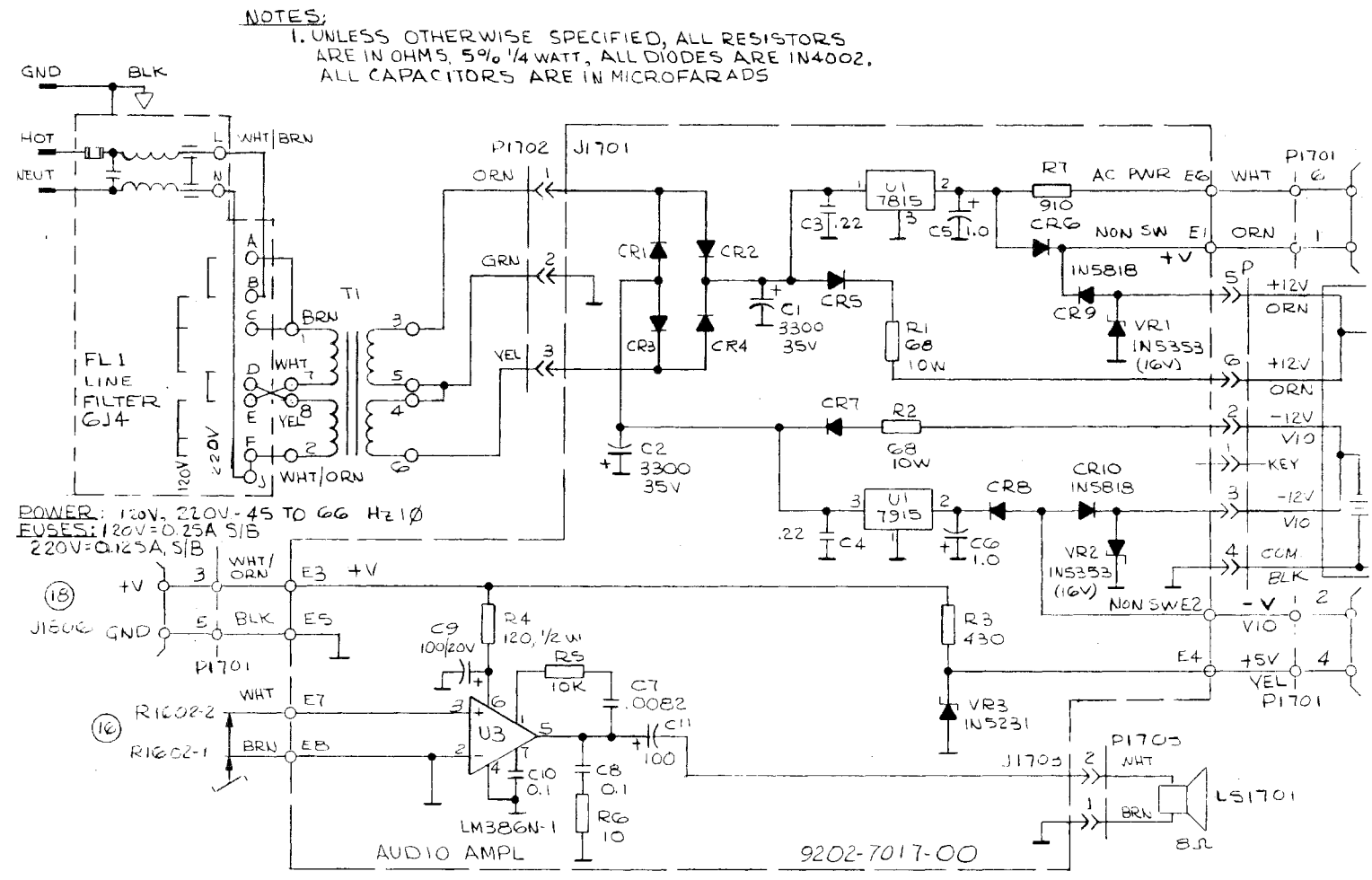

Bestückungszeichnung 1 : 1 siehe Seite
Component drawings are 1 : 1, see Page **21**
Disposition des composants en grandeur réelle, voir page

BN 9202/03 PMG 3	PARTS LIST - 920
DESIGNATION SCHEMATIC (17) POWER SUPPLY/AUDIO AMPL	SERIES A.... DWG NO 9202-7517-01/B

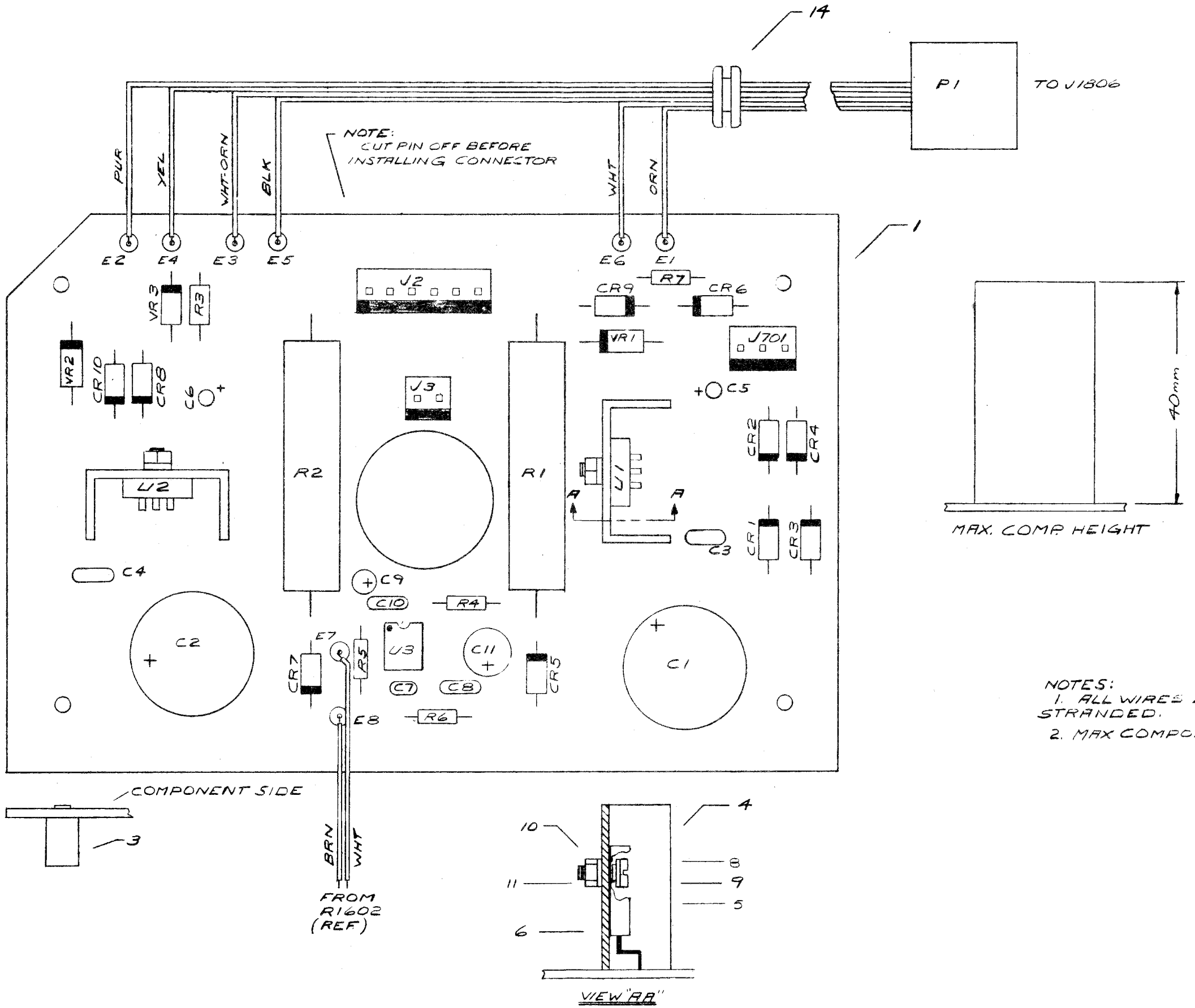

NOTES:
1. ALL WIRES 22 GAUGE STRANDED.
2. MAX COMPONENT HEIGHT 40mm

PL 9202-7617

BN 9202/03		
DESIGNATION ASSEMBLY POWER SUPPLY BOARD	SERIES A... DWG NO. 9202-7017-00/C PAGE 1 OF 2	REV 0

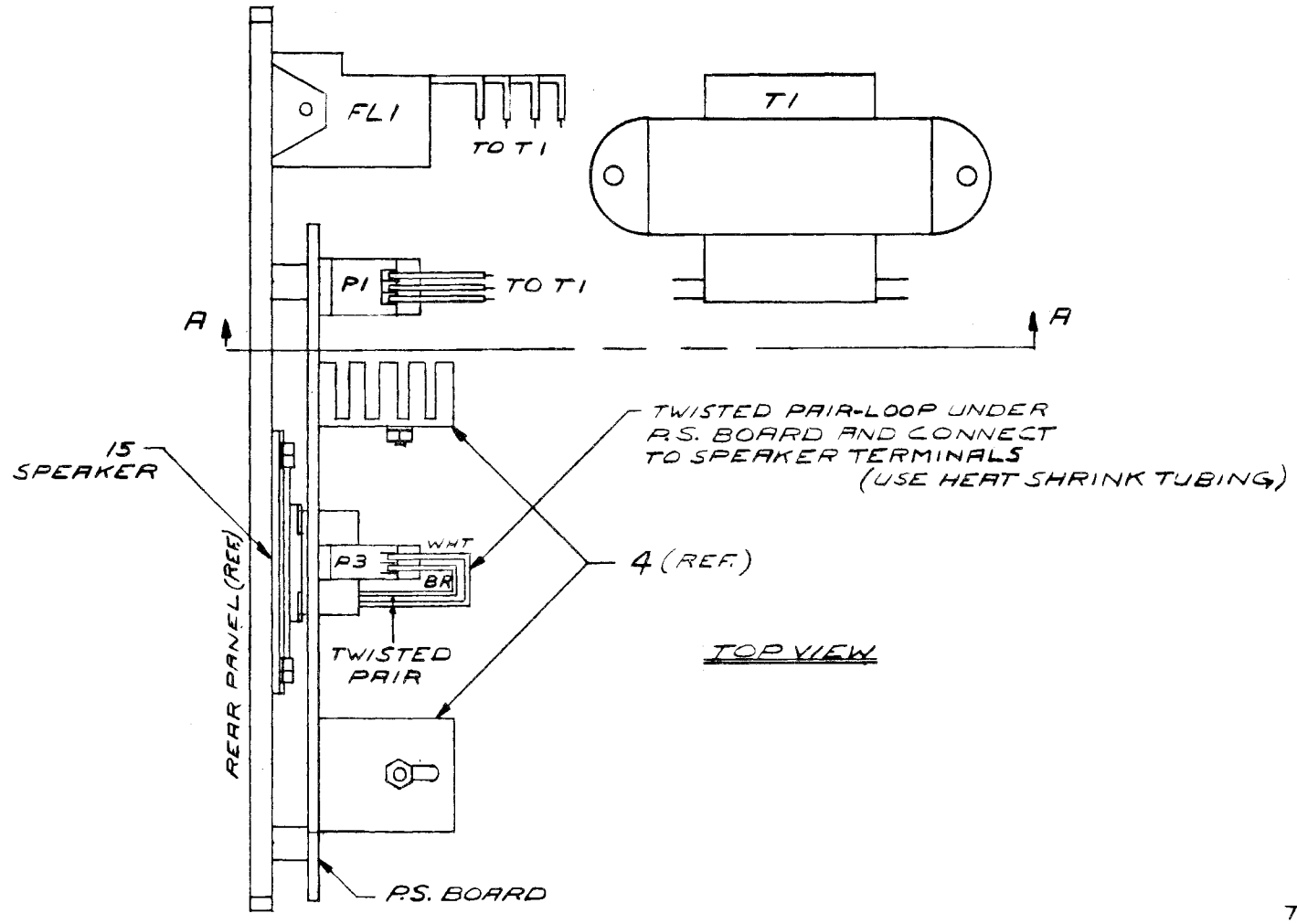

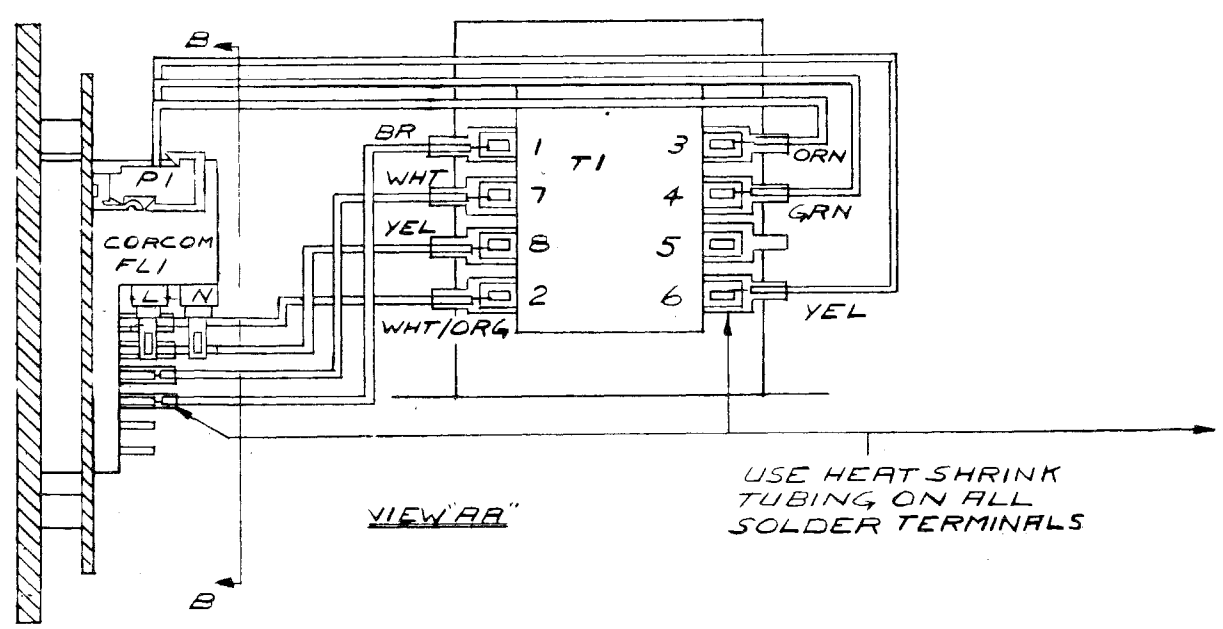

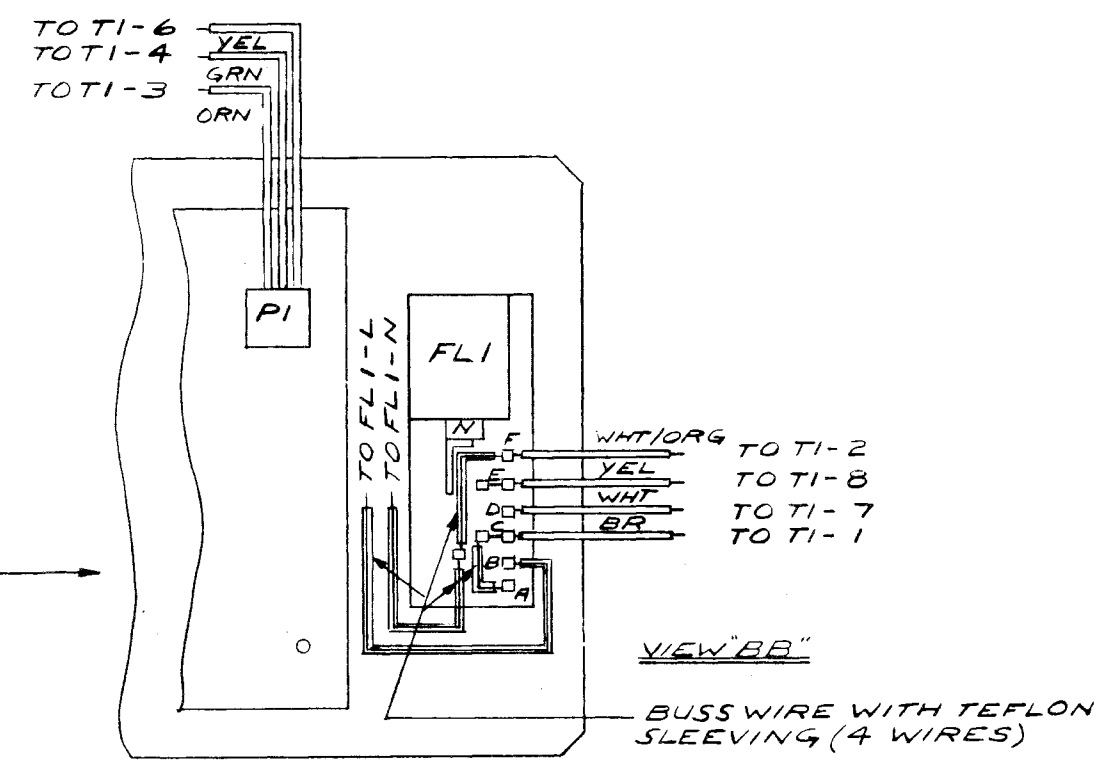

PL 9202-761

BN 9202/03	
DESIGNATION ASSEMBLY DWG POWER SUPPLY BOARD	SERIES A... DWG NO. 9202-7017-00

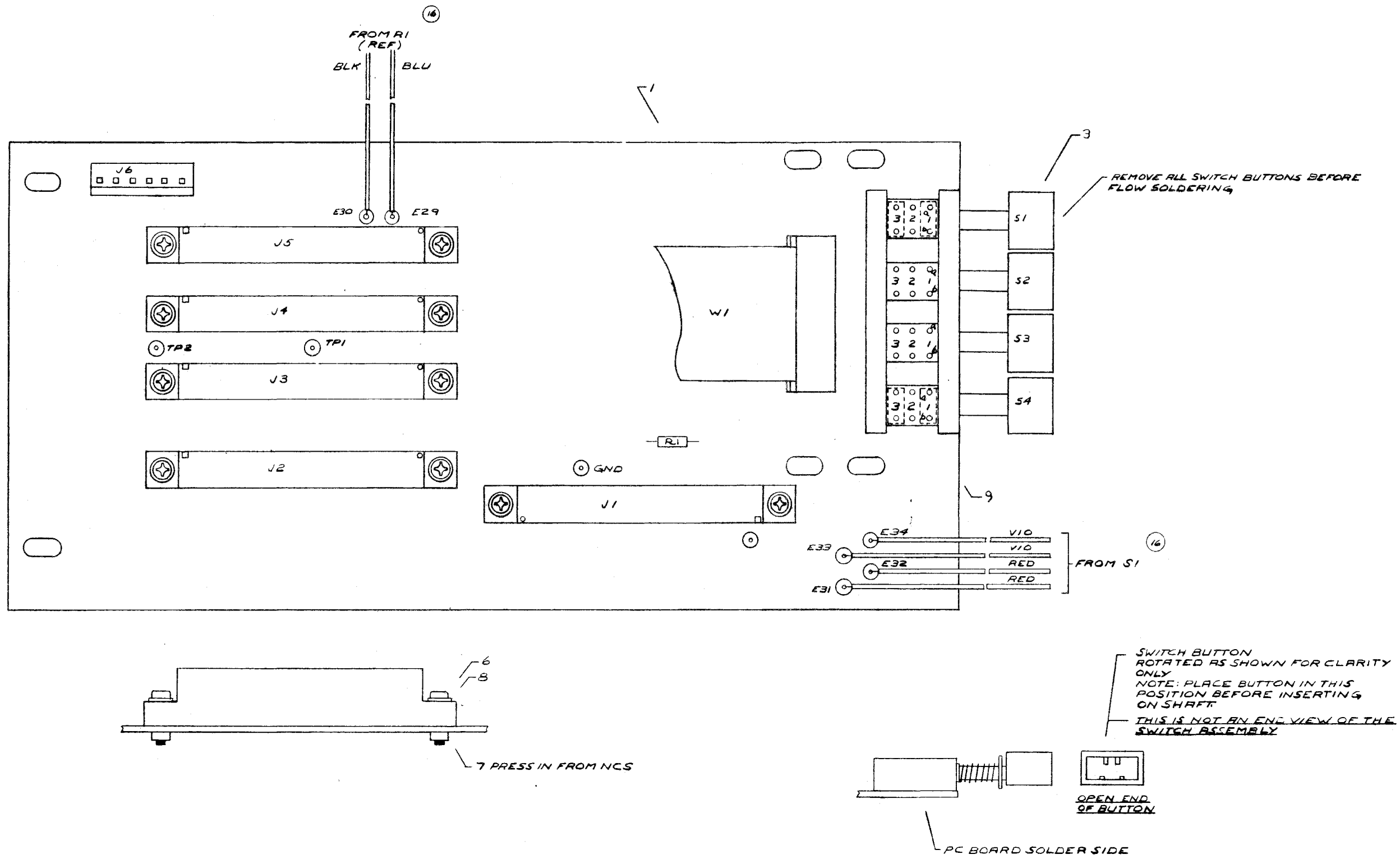

PL 920

9202/03	
DESIGNATION MOTHER BOARD ASSEMBLY DWG	SERIES A... DWG NO. 9202-7

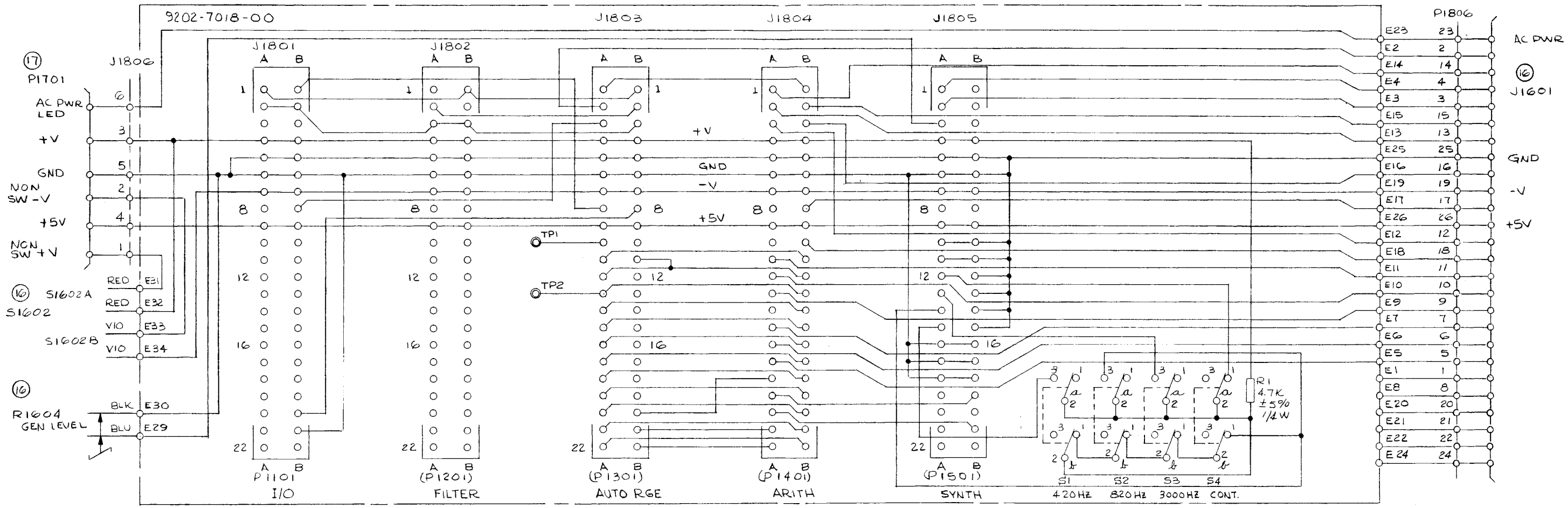

NOTES:
1. CONNECTOR P1806 IS PART OF CABLE ASSY N1801

BN 9202/03 PMG-3	PARTS LIST-9202-7618/PL	
DESIGNATION SCHEMATIC (18) MOTHER BOARD	SERIES A... DWG NO. 9202-7518.01/BB	PAGE 1 OF 1	REV 0

ITEM	QTY	DESIGNATION	ORDERING INFORMATION VALUE, SIZE, TOL	MANUFACTURER, NOTES	STOCK NO	
R1101	1	Resistor	Film 615 ±.5% 4W	Caddock MS 245	0008-0646	
R1102	1	Resistor	Film 1255 ±.5% 4W	Caddock MS 245	0008-0665	
R1103	1	Resistor	Film 615 ±.5% 4W	Caddock MS 245	0008-0646	
R1104	1	Resistor	Film 1255 ±.5% 4W	Caddock MS 245	0008-0665	
R1105	1	Resistor	MF 200 k 1% ¼W	MF4C RN55C-2003-F	0008-0316	
R1106	1	Resistor	MF 200 k 1% ¼W	" RN55C-2003-F	0008-0316	
R1107	1	Resistor	MF 2.67 k 1% ¼W	" RN55C-2761-F	0008-0336	
R1108	1	Resistor	MF 681 1% ¼W	" RN55C-6810-F	0008-0047	
R1109	1	Resistor	CF 100 k 5% ¼W	Amp. CR-25	0008-0194	
R1110	1	Resistor	MF 681 1% ¼W	MF4C RN55C-6810-F	0008-0047	
R1111	1	Resistor	CF 22 5% ¼W	Amp. CR-25	0008-0234	
R1112	1	Resistor	MF 15 k 1% ¼W	MF4C RN55C-1502-F	0008-0348	
R1113	1	Resistor	MF 10 k 1% ¼W	" RN55C-1002-F	0008-0311	
R1114	1	Resistor	MF 8.25 k 1% ¼W	" RN55C-82510F	0008-0329	
R1115	1	Resistor	MF 118 k 1% ¼W	" RN55C-1183-F	0008-0450	
R1116						
R1117	1	Resistor	CF 22 5% ¼W	Amp. CR-25	0008-0234	
R1118						
R1119						
R1120						
R1121	1	Resistor	CF 100 5% ¼W	Amp. CR-25	0008-0172	
R1122	1	Resistor	CF 100 5% ¼W	Amp. CR-25	0008-0172	
R1123	1	Resistor	CF 12 k 5% ¼W	Amp. CR-25	0008-0184	
R1124	1	Resistor	CF 12 k 5% ¼W	Amp. CR-25	0008-0184	

ITEM	QTY	DESIGNATION	ORDERING INFORMATION VALUE, SIZE, TOL	MANUFACTURER, NOTES	STOCK NO.	
R1125	1	Resistor	MF 82.5 1% ¼W	MF4C RN55C-82R5-F	0008-0276	1)
R1126	1	Resistor	MF 28.7 1% ¼W	" RN55C-27R7-F	0008-0518	
R1127	1	Resistor	MF 332 1% ¼W	" RN55C-3320-F	0008-0131	1)
R1128	1	Resistor	MF 30.1k 1% ¼W	" RN55C-3012-F	0008-0061	
R1129	1	Resistor	MF 4.64k 1% ¼W	" RN55C-4641-F	0008-0324	1)
R1130	1	Resistor	MF 13 k 1% ¼W	" RN55C-1302-F	0008-0328	1)
R1131	1	Resistor	MF 30.1 k 1% ¼W	" RN55C-3012-F	0008-0061	
R1132	1	Resistor	MF 4.32 k 1% ¼W	" RN55C-4321-F	0008-0327	
R1133	1	Resistor	MF 3.92 k 1% ¼W	" RN55C-3921-F	0008-0274	
R1134	1	Resistor	MF 23.7 k 1% ¼W	" RN55C-2372-F	0008-0059	
R1135	1	Resistor	CF 100 5% ¼W	Amp. CR-25	0008-0172	
R1136	1	Resistor	CF 100 5% ¼W	Amp. CR-25	0008-0172	
R1137	1	Resistor	MF 13 k 1% ¼W	MF4C RN55C-1302-F	0008-0328	
R1138	1	Resistor	CF 27 k 5% ¼W	Amp. CR-25	0008-0186	
R1139	1	Resistor	CF 27 k 5% ¼W	Amp. CR-25	0008-0186	
R1140	1	Resistor	CF 27 k 5% ¼W	Amp. CR-25	0008-0186	
R1141	1	Resistor	CF 27 k 5% ¼W	Amp. CR-25	0008-0186	
R1142	1	Resistor	CF 51 5% ¼W	Amp. CR-25	0008-0004	
R1143	1	Resistor	CF 7.5 k 5% ¼W	Amp. CR-25	0008-0362	
R1144	1	Resistor	CF 4.7 k 5% ¼W	Amp. CR-25	0008-0182	
R1145	1	Resistor	CF 100 k 5% ¼W	Amp. CR-25	0008-0194	
R1146	1	Resistor	CF 330 k 5% ¼W	Amp. CR-25	0008-0403	1)
R1147	1	Resistor	CF 220 k 5% ¼W	Amp. CR-25	0008-0251	
R1148	1	Resistor	CF 47 k 5% ¼W	Amp. CR-25	0008-0190	
R1149	1	Resistor	CF 1 M 5% ¼W	Amp. CR-25	0008-0292	

1) Select at Test.

ITEM	QTY	DESIGNATION	ORDERING INFORMATION VALUE, SIZE, TOL.	ORDERING INFORMATION MANUFACTURER, NOTES	STOCK NO.	
R1150	1	Resistor	CF 51 5% ½W	Amp. CR-25	0008-0004	
R1151	1	Resistor	CF 3.9 k 5% ½W	Amp. CR-25	0008-0181	
R1152	1	Resistor	CF 51 5% ½W	Amp. CR-25	0008-0004	
R1153	1	Resistor	CF 2.7 k 5% ½W	Amp. CR-25	0008-0213	
R1154	1	Resistor	CF 18 k 5% ½W	Amp. CR-25	0008-0295	
R1155	1	Resistor	CF 470 k 5% ½W	Amp. CR-25	0008-0206	
R1156	1	Resistor	CF 330 k 5% ½W	Amp. CR-25	0008-0403	
R1157	1	Resistor	MF 82.5 k 1% ½W	MF4C RN55C-8252-F	0008-0070	
R1158	1	Resistor	MF 90.9 k 1% ½W	" RN55C-90 92-F	0008- 0298	
R1159	1	Resistor	MF 13.0 k 1% ½W	" RN55C-1302-F	0008-0328	
R1160	1	Resistor	CF 330 5% ½W	Amp. CR-25	0008-0242	
R1161	1	Resistor	ZERO ohm Jumper	Tevis WL-40	0008-0612	

ITEM	QTY	DESIGNATION	ORDERING INFORMATION VALUE, SIZE, TOL.	ORDERING INFORMATION MANUFACTURER, NOTES	STOCK NO.	
C1101	1	Cap Cer	0.22 uF 50V	Centralab CW30C-224 K	0002-0263	
C1102	1	Cap M-Poly	10 uF 10% 200V	M/E 708A1CF106K201X	0002-0360	
C1103	1	Cap Tant	22 uF 10% 15V	Sprague 196D226X9015 KA1	0032-0007	
C1104	1	Cap Tant	22 uF 10% 15V	196D226X9015 KA1	0032-0007	
C1105	1					
C1106	1	Cap Tant	100 uF 10% 20V	Sprague 196D107X9020 TE4	0032-0090	
C1107	1	Cap Tant	100 uF 10% 20V	196D107X9020 TE4	0032-0090	
C1108	1	Cap Cer	33 pF 2% NPO	M/E 2222-631-10339	0002-0052	
C1109	1	Cap M-Poly	10 uF 10% 200V	M/E 708A1CF106K201X	0002-0360	
C1110	1	Cap Tant	100 uF 10% 20V	Sprague 196D107X9020 TE4	0032-0090	
C1111	1	Cap Cer	0.0022 uF 10% 50V	Centralab CW15C 222 K	0002-0273	
C1112	1	Cap Tant	6.8 uF 10% 35V	Sprague 196D334X9035 HA1	0032-0086	
C1113	1	Cap Tant	0.68 uF 10% 35V	196D684X9035 JA1	0032-0107	
C1114	1	Cap Cer	15 pF 2% NPO	M/E 2222-631-10159	0002-0049	1)
C1115	1	Cap Cer	0.0033 uF 10% 50V	Centralab CW15C 332 K	0002-0272	
U1101	1	I.C.	Dual SPDT Analog Sw	Harris HI-1-5043-5	0035-0316	
U1102	1	I.C.	Dual FET Op-Amp	Nat. LF 353 N	0035-0303	
U1103	1	I.C.	Dual FET Op-Amp	Nat. LF 353 N	0035-0303	
U1104	1	I.C.	Bi FET Op-Amp	Nat. LF 355 N	0035-0259	
U1105	1	I.C.	Regulator	Nat. LM 317 T	0035-0315	

1) Select at Test.

ITEM	QTY	DESIGNATION	ORDERING INFORMATION VALUE, SIZE, TOL.	ORDERING INFORMATION MANUFACTURER, NOTES	STOCK NO.	
L1101	1	Coil	560 uH 5%	Delevan 2500-16	0033-0127	
L1102	1	Coil	220 uH 5%	Delevan 1537-92	0033-0060	
L1103	1	Coil	180 uH 5%	Delevan 1537-88	0033-0128	
CR1101	1	Diode	1N 5235 B		0037-0189	
CR1102	1	Diode	1N 5235 B		0037-0189	
CR1103	1	Diode	1N 4448		0037-0001	
CR1104	1	Diode	1N 4448		0037-0001	
CR1105	1	Diode	1N 4448		0037-0001	
CR1106	1	Diode	1N 4448		0037-0001	
CR1107						
CR1108	1	Diode	1N 4448		0037-0001	
CR1109	1	Diode	1N 4448		0037-0001	
CR1110						
CR1111	1	Diode	1N 4002		0037-0020	
CR1112	1	Diode	1N 4002		0037-0020	
CR1113	1	Diode	1N 4002		0037-0020	
CR1114	1	Diode	1N 4002		0037-0020	

ITEM	QTY	DESIGNATION	ORDERING INFORMATION VALUE, SIZE, TOL.	ORDERING INFORMATION MANUFACTURER, NOTES	STOCK NO.	
VR1101	1	Diode	Zener 1N 5230 B		0035-0019	
VR1102	1	Diode	Zener 1N 5235 B		0035-0189	
VR1103	1	Diode	Zener 1N 5235 B		0035-0189	
VR1104	1	Diode	Zener 1N 5236 B		0035-0200	
VR1105	1	Diode	Zener 1N 5236 B		0035-0200	
Q1101	1	Transistor	2N 2219	Motorola	0010-0003	
Q1102	1	Transistor	2N 2905	Motorola	0010-0002	
Q1103	1	Transistor	2N 4393	Motorola	0010-0148	
Q1104	1	Transistor	BCY 59 X	NCS	0010-0184	
Q1105	1	Transistor	BCY 59 X	NCS	0010-0184	
Q1106	1	Transistor	BCY 59 X	NCS	0010-0184	
T1101	1	Transformer		TNI T 1297	0012-0008	
T1102	1	Transformer		TNI T 1262	0012-0010	

ITEM	QTY	DESIGNATION	ORDERING INFORMATION VALUE, SIZE, TOL	ORDERING INFORMATION MANUFACTURER, NOTES	STOCK NO.	
S1101	1	Switch SS	2PDT Make-before-Break	Schadow F2UEE MBB	0011-0075	
S1102	1	Switch SS		WGI 9202-8001-00/B		
S1103	1	Switch SS		WGI 9202-8005-00/B		
S1104	1	Switch SS		WGI 9202-8001-00/B		
S1105	1	Switch SS		WGI 9202-8001-00/B		
J1101	1	Jack	TF 3-pole S-280	WGR 0000-3713.00/4	0003-0143	
J1102	1	Jack	TF 3-pole S-280	WGR 0000-3713.00/4	0003-0143	
1	1	P.C. Board	I/O drilled	WGI 9202-7001-02		
2						
3	2	Handle	P.C. Board gy	WGR 00-3705.55/4	0028-0112	
4	4	Rivet	f. Handle	WGR 5 WN 33/3/0	0005-0021	
5	2	Can, Round	Tin, shielded 1.5x1"H	HUDSON HU-2735-1.000-CRS Hot Tin	0020-0127 DIP	
6						
7	2	Cable Tie				
8	1	Screw	M 3x6mm Cyl CrSl	ZLK 1875 A	0005-0187	
9	1	Washer	Lock #4	Shakeproof	0005-0028	
10	1	Nut	Hex M 3		0005-0196	
11	1	Washer	Thermal	Chomeric 60-11-5791-1674	28-0151	
12	1	Label	Signal Triangle	WGR 0000-7575.994	0021-0025	

ITEM	QTY	DESIGNATION	ORDERING INFORMATION VALUE, SIZE, TOL	ORDERING INFORMATION MANUFACTURER, NOTES	STOCK NO	
13	10	Spacer	Switch,	WGI 9202-0100-07/A		
14	4	Nut	Pem M 3 (J 101-103)	Penn CL-M3-2	0005-0185	
15		Hook-up Wire	AWG 22, Stranded;	Grn Rd, Org, Blk,		
16		Hook-up Wire	AWG 30, Stranded;	Bl, Wht,		
17	2	Pin	Contact, knurled	WGR 0000-1717.01/5	0003-0246	
18						
19	1	Shield Assembly		WGI 9202-0500-006/B		
20	4	Screw	M 3x5mm Cyl CrSl	ZLK 1875 A	0005-0200	
21	4	Washer	M3 Flat		0005-0274	
22						
23						
24						
25						

ITEM	QTY	DESIGNATION	ORDERING INFORMATION VALUE, SIZE, TOL	MANUFACTURER, NOTES	STOCK NO
R1201	1	Resistor	CF 22 5% ¼W	Amp. CR-25	0008-0234
R1202	1	Resistor	CF 22 5% ¼W	Amp. CR-25	0008-0234
R1203	1	Resistor	MF 23.7 k 1% ¼W	RN55C-2372-F.	0008-0059
R1204	1	Resistor	MF 26.7 k 1% ¼W	RN55C-2672-F	0008-0060
R1205	1	Resistor	MF 35.7 k 1% ¼W	RN55C-3572-F	0008-0064
R1206	1	Resistor	MF 6.81 k 1% ¼W	RN55C-6811-F	0008-0321
R1207	1	Resistor	MF 6.81 k 1% ¼W	RN55C-6811-F	0008-0321
R1208	1	Resistor	MF 3.16 k 1% ¼W	RN55C-3161-F	0008-0052
R1209	1	Resistor	MF 10.0 k 1% ¼W	RN55C-1002-F	0008-0311
R1210	1	Resistor	MF 23.7 k 1% ¼W	RN55C-2372-F	0008-0059
R1211	1	Resistor	MF 23.7 k 1% ¼W	RN55C-2372-F	0008-0059
R1212	1	Resistor	MF 18.7 k 1% ¼W	RN55C-1872-F	0008-0667
R1213	1	Resistor	MF 22.6 k 1% ¼W	RN55C-2262-F	0008-0668
R1214	1	Resistor	MF 23.7 k 1% ¼W	RN55C-2372-F	0008-0059
R1215	1	Resistor	MF 23.7 k 1% ¼W	RN55C-2372-F	0008-0059
R1216	1	Resistor	MF 30.9 k 1% ¼W	RN55C-3092-F	0008-0430
R1217	1	Resistor	MF 30.9 k 1% ¼W	RN55C-3092-F	0008-0430
R1218	1	Resistor	MF 28.0 k 1% ¼W	RN55C-2802-F	0008-0306
R1219	1	Resistor	MF 28.0 k 1% ¼W	RN55C-2802-F	0008-0306
R1220	1	Resistor	MF 8.25 k 1% ¼W	RN55C-8251-F	0008-0329
R1221	1	Resistor	MF 121 k 1% ¼W	RN55C-1213-F	0008-0231
R1222	1	Resistor	MF 30.1 k 1% ¼W	RN55C-3012-F	0008-0061
R1223	1	Resistor	MF 21.0 k 1% ¼W	RN55C-2102-F	0008-0280
R1224	1	Resistor	MF 21.0 k 1% ¼W	RN55C-2102-F	0008-0280
R1225	1	Resistor	MF 21.0 k 1% ¼W	RN55C-2102-F	0008-0280

ITEM	QTY	DESIGNATION	ORDERING INFORMATION VALUE, SIZE, TOL	MANUFACTURER, NOTES	STOCK NO.
R1226	1	Resistor	MF 14.7 k 1% ¼W	RN55C-1472-F	0008-0669
R1227	1	Resistor	MF 14.7 k 1% ¼W	RN55C-1472-F	0008-0669
R1228	1	Resistor	MF 11.0 k 1% ¼W	RN55C-1102-F	0008-0056
R1229	1	Resistor	CF 390 k 5% ¼W	Amp. CR-25	0008-0012
R1230	1	Resistor	MF 61.9 k 1% ¼W	RN55C-6182-F	0008-0069
R1231	1	Resistor	MF 392 1% ¼W	RN55C-3920-F	0008-0043
R1232	1	Resistor	MF 31.6 k 1% ¼W	RN55C-3162-F	0008-0062
R1233	1	Resistor	MF 17.8 k 1% ¼W	RN55C-1782-F	0008-0332
R1234	1	Resistor	MF 1.1 k 1% ¼W	RN55C-1101-F	0008-0050
R1235	1	Resistor	MF 174 k 1% ¼W	RN55C-1743-F	0008-0671
R1236	1	Resistor	MF 8.25 k 1% ¼W	RN55C-8251-F	0008-0329
R1237	1	Resistor	MF 19.1 k 1% ¼W	RN55C-1912-F	0008-0641
R1238	1	Resistor	MF 4.75 k 1% ¼W	RN55C-4751-F	0008-0227
R1239	1	Resistor	MF 6.81 k 1% ¼W	RN55C-6811-F	0008-0321
R1240	1	Resistor	MF 11.0 k 1% ¼W	RN55C-1102-F	0008-0056
R1241	1	Resistor	MF 15.0 k 1% ¼W	RN55C-1502-F	0008-0348
R1242	1	Resistor	MF 3.01 k 1% ¼W	RN55C-3011-F	0008-0299
R1243	1	Resistor	MF 33.2 k 1% ¼W	RN55C-3322-F	0008-0286
R1244	1	Resister	CF 22 5% ¼W	Amp. CR-25	0008-0234
R1245	1	Resistor	CF 22 5% ¼W	Amp. CR-25	0008-0234
R1246	1	Resistor	CF 22 5% ¼W	Amp. CR-25	0008-0234
R1247	1	Resistor	CF 22 5% ¼W	Amp. CR-25	0008-0234
R1248	1	Resistor	CF 22 5% ¼W	Amp. CR-25	0008-0234
R1249	1	Resistor	CF 22 5% ¼W	Amp. CR-25	0003-0234
R1250	1	Resistor	CF 22 5% ¼W	Amp. CR-25	0008-0234

ITEM	QTY	DESIGNATION	ORDERING INFORMATION VALUE, SIZE, TOL	MANUFACTURER, NOTES	STOCK NO.	
R1251	1	Resistor	CF 22 5% ¼W	Amp. CR-25	0008-0234	
R1252	1	Resistor	CF 22 5% ¼W	Amp. CR-25	0008-0234	
R1253	1	Resistor	CF 22 5% ¼W	Amp. CR-25	0008-0234	
R1254	1	Resistor	CF 22 5% ¼W	Amp. CR-25	0008-0234	
R1255	1	Resistor	CF 22 5% ¼W	Amp. CR-25	0008-0234	
R1256	1	Resistor	CF 22 5% ¼W	Amp. CR-25	0008-0234	
R1257	1	Resistor	CF 22 5% ¼W	Amp. CR-25	0008-0234	
R1258	1	Resistor	CF 22 5% ¼W	Amp. CR-25	0008-0234	
R1259	1	Resistor	CF 22 5% ¼W	Amp. CR-25	0008-0234	
R1260	1	Resistor	CF 22 5% ¼W	Amp. CR-25	0008-0234	
R1261	1	Resistor	CF 22 5% ¼W	Amp. CR-25	0008-0234	
R1262	1	Resistor	MF 10.0 k 1% ¼W	RN55C-1002-F	0008-0311	
R1263	1	Resistor	MF 4.75 k 1% ¼W	RN55C-4752-F	0008-0227	
R1264	1	Resistor	MF 6.81 k 1% ¼W	RN55C-6811-F	0008-0321	
R1265	1	Resistor	MF 6.65 k 1% ¼W	RN55C-6651-F	0008-0679	
R1266	1	Resistor	MF 11.0 k 1% ¼W	RN55C-1102-F	0008-0056	
R1267	1	Resistor	MF 46.4 k 1% ¼W	RN55C-4642-F	0008-0066	
R1268	1	Resistor	MF 2.67 k 1% ¼W	RN55C-2671-F	0008-0336	
R1269	1	Resistor	MF 10 1% ¼W	RN55D-10R0-F	0008-0598	
R1270	1	Resistor	MF 100 k 1% ¼W	RN55C-1003-F	0008-0340	
R1271	1	Resistor	MF 10.0 k 1% ¼W	RN55C-1002-F	0008-0311	
R1272	1	Resistor	MF 1.0 k 1% ¼W	RN55C-1001-F	0008-0225	
R1273	1	Resistor	MF 1.3 k 1% ¼W	RN55C-1301-F	0008-0262	1)
R1274	1	Resistor	MF 1.18 k 1% ¼W	RN55C-1181-F	0008-0323	1)
R1275	1	Resistor	MF 825 1% ¼W	RN55C-8250-F	0008-0355	1)

1) May be changed at test.

ITEM	QTY	DESIGNATION	ORDERING INFORMATION VALUE, SIZE, TOL	MANUFACTURER, NOTES	STOCK NO.	
C1201	1	Cap Tant	22 uF 10% 15V	Sprague 196D226X9015 KA1	0032-0007	
C1202	1	Cap Tant	22 uF 10% 15V	196D226X9015 KA1	0032-0007	
C1203	1	Cap Cer	0.1 uF 10% 50V	Centralab CW30C 104K	0002-0029	
C1204	1	Cap Mica	6800 pF 2% 300V	ARCO DM19DC682G03	0002-0369	
C1205	1	Cap Mica	6800 pF 2% 300V	DM19DC682G03	0002-0369	
C1206	1	Cap Poly	0.1 uF 10% 100V	Stettner-Trush KP 1830-410/01	0002-0376	
C1207	1	Cap Poly	0.1 uF 100V	KP 1830-410/01	0002-0376	
C1208	1	Cap Mica	6800 pF 2% 300V	ARCO DM19DC682G03	0002-0369	
C1209	1	Cap Mica	560 pF 2% 300V	ARCO DM15DC561G03	0002-0361	
C1210	1	Cap Mica	3300 pF 2% 500V	ARCO DM19DD332G03	0002-0366	
C1211	1	Cap Mica	1300 pF 2% 500V	ARCO DM19DD132G03	0002-0387	
C1212	1	Cap Mica	1800 pF 2% 500V	ARCO DM19DD182G03	0002-0363	
C1213	1	Cap Mica	1500 pF 2% 500V	ARCO DM19DD1 2G03	0002-0388	
C1214	1	Cap Mica	5600 pF 2% 300V	ARCO DM19DC562G03	0002-0368	
C1215	1	Cap Mica	240 pF 2% 100V	ARCO DM10DA241G03	0002-0389	
C1216	1	Cap Mica	2000 pF 2% 500V	ARCO DM19DD202G03	0002-0380	
C1217	1	Cap Mica	910 pF 2% 300V	ARCO DM15DC911G03	0002-0370	
C1218	1	Cap Mica	3900 pF 2% 300V	ARCO DM19DC392G03	0002-0390	
C1219	1	Cap Mica	1100 pF 2% 300V	ARCO DM15DC112G03	0002-0391	
C1220	1	Cap Mica	300 pF 2% 100V	ARCO DM10DA301G03	0002-0392	
C1221	1	Cap Mica	2000 pF 2% 500V	ARCO DM19DD202G03	0002-0380	
C1222	1	Cap Mica	3300 pF 2% 300V	ARCO DM19DC332G03	0002-0366	
C1223	1	Cap Mica	360 pF 2% 100V	ARCO DM10DA361G03	0002-0372	
C1224	1	Cap Poly	0.1 uF 10% 100V	Stettner-Trush KP 1830-410/01	0002-0376	
C1225	1	Cap Poly	0.1 uF 10% 100V	KP 1830-410/01	0002-0376	

ITEM	QTY	DESIGNATION	ORDERING INFORMATION VALUE, SIZE, TOL	MANUFACTURER, NOTES	STOCK NO	
R1276	1	Resistor	MF 392 1% ¼W	RN55C-3920-F	0008-0043	1)
R1277	1	Resistor	MF 1.1 k 1% ¼W	RN55C-1101-F	0008-0050	1)
R1278	1	Resistor	CF 1.0 M 5% ¼W	Amp. CR-25	0008-0292	1)
R1279	1	Resistor				

1) May be changed at test.

ITEM	QTY	DESIGNATION	ORDERING INFORMATION VALUE, SIZE, TOL	MANUFACTURER, NOTES	STOCK NO	
C1226	1	Cap Poly	0.1 uF 10% 100V	Stettner-Trush KP 1830-410/01	0002-0376	
C1227	1	Cap Poly	0.1 uF 10% 100V	KP 1830-410/01	0002-0376	
C1228	1	Cap Poly	0.1 uF 10% 100V	KP 1830-410/01	0002-0376	
C1229	1	Cap Mica	910 pF 2% 300V	ARCO DM15DC911G03	0002-0370	
C1230	1	Cap Mica	680 pF 2% 300V	ARCO DM15DC681G03	0002-0393	
C1231	1	Cap Mica	820 pF 2% 300V	ARCO DM15DC821G03	0002-0394	
C1232	1	Cap Mica	360 pF 2% 100V	ARCO DM10DA361G03	0002-0372	
C1233	1	Cap Mica	3000 pF 2% 300V	ARCO DM19DC302G03	0002-0395	
C1234	1	Cap Cer	150 pF 2% N150	M/E 2222-631-1034151	0002-0011	
C1235	1	Cap Cer	27 pF 2% NPO	M/E 2222-631-10279	0002-0220	
C1236	1					
C1237	1	Cap Cer	39 pF 2% NPO	M/E 2222-631-10399	0002-0221	
C1238	1	Cap Cer	180 pF 2% N750	M/E 2222-631-58181	0002-0299	
C1239	1	Cap Cer	82 pF 2% NPO	M/E 2222-631-10829	0002-0055	
C1240	1	Cap Cer	22 pF 2% NPO	M/E 2222-631-10229	0002-0051	
C1241	1	Cap Cer	82 pF 2% NPO	M/E 2222-631-10829	0002-0055	
C1242	1	Cap Cer	15 pF 2% NPO	M/E 2222-631-10159	0002-0049	
C1243	1					2)
C1244	1	Cap Tant	22 uF 10V 15V	Sprague 196D226X9015 KA1	0032-0007	
C1245	1	Cap Tant	22 uF 10% 15V	196D226X9015 KA1	0032-0007	
C1246	1	Cap Tant	22 uF 10% 15V	196D226X9015 KA1	0032-0007	
C1247	1	Cap Tant	22 uF 10% 15V	196D226X9015 KA1	0032-0007	
C1248	1	Cap Tant	22 uF 10% 15V	196D226X9015 KA1	0032-0007	
C1249	1	Cap Tant	22 uF 10% 15V	196D226X9015 KA1	0032-0007	
C1250	1	Cap Tant	22 uF 10% 15V	196D226X9015 KA1	0032-0007	

2) Select at test.

ITEM	QTY	DESIGNATION	ORDERING INFORMATION VALUE, SIZE, TOL	MANUFACTURER, NOTES	STOCK NO.	
C1251	1	Cap Tant	22 uF 10% 15V	Sprague 196D226X9015 KA1	0032-0007	
C1252	1	Cap Tant	22 uF 10% 15V	196D226X9015 KA1	0032-0007	
C1253	1	Cap Tant	22 uF 10% 15V	196D226X9015 KA1	0032-0007	
C1254	1	Cap Tant	22 uF 10% 15V	196D226X9015 KA1	0032-0007	
C1255	1	Cap Tant	22 uF 10% 15V	196D226X9015 KA1	0032-0007	
C1256	1	Cap Tant	22 uF 10% 15V	196D226X9015 KA1	0032-0007	
C1257	1	Cap Tant	22 uF 10% 15V	196D226X9015 KA1	0032-0007	
C1258	1	Cap Tant	22 uF 10% 15V	196D226X9015 KA1	0032-0007	
C1259	1	Cap Tant	22 uF 10% 15V	196D226X9015 KA1	0032-0007	
C1260	1	Cap Tant	22 uF 10% 15V	196D226X9015 KA1	0032-0007	
C1261	1	Cap Tant	22 uF 10% 15V	196D226X9015 KA1	0032-0007	
C1262						
C1263	1	Cap Mica	10000 pF 2% 300V	ARCO DM20DC103G03	0002-0396	
C1264	1	Cap Cer	120 pF 2% NPO	M/E 2222-631-121	0002-0223	
C1265	1	Cap Trim	3/15 pF Horiz	ERIE 538-011 D 3-15 20	0002-0397	
C1266	1	Cap Mica	820 pF 2% 300V	ARCO DM15DC821G03	0002-0394	
C1267	1	Cap Mica	910 pF 2% 300V	ARCO DM15DC911G03	0002-0370	
C1268	1	Cap Cer	0.068 uF 10% 50V	Centralab CW20C 683 K	0002-0280	
C1269	1	Cap Cer	8.2 pF .25% NPO	M/E 2222-631-09828	0002-0057	
C1270	1	Cap Cer	22 pF 2% NPO	M/E 2222-631-10229	0002-0051	
C1271	1					2)
C1272	1	Cap Cer	8.2 pF .25% NPO	M/E 2222-631-09828	0002-0057	

2) Selectr at test.

ITEM	QTY	DESIGNATION	ORDERING INFORMATION VALUE, SIZE, TOL	MANUFACTURER, NOTES	STOCK NO.	
U1201	1	I.C.	J-FET Op-Amp 14p	National LF 347 N	0035-0314	
U1202	1	I.C.	Dual-FET Op-Amp 8p	National LF 353 N	0035-0303	
U1203	1	I.C.	Bi-FET Op-Amp 8p	National LF 355 BN	0035-0259	
U1204	1	I.C.	Dual-FET Op-Amp 8p	National LF 353 N	0035-0303	
U1205	1	I.C.	Bi-FET Op-Amp 8p	National LF 355 BN	0035-0259	
U1206	1	I.C.	Dual-FET Op-Amp 8p	National LF 353 N	0035-0303	
U1207	1	I.C.	Dual-FET Op-Amp 8p	National LF 353 N	0035-0303	
U1208	1	I.C.	Bi-FET Op-Amp 8p	National LF 355 BN	0035-0259	
U1209	1	I.C.	Dual-FET Op-Amp 8p	National LF 353 N	0035-0303	
FL1201	1	Filter	Notch, 826 Hz	WGI 9202-9550-002		
S1201	1					
S1202	1					
S1203	1	Switch Assembly 5S		WGI 9202-8006-007/B		
S1204	1					
S1205	1					
	1	P.C. Board	Filter, drilled	WGI 9202-7012-02		
	2	Socket Terminal Carrier		Augat 716 AG 2D	0034-0025	3)
	6	Receptical		Germ.Amp 380-598-1	0003-0202	

3) 32 pins used per P.C. Board.

ITEM	QTY	DESIGNATION	ORDERING INFORMATION VALUE, SIZE, TOL	MANUFACTURER, NOTES	STOCK NO.
R1301	1	Resistor	MF 9.09 k 0.1% ¼W	MF4C RN55C-9091-B	0008-0624
R1302	1	Resistor	MF 332 1% ¼W	MF4C RN55C-3320-F	0008-0131
R1303	1	Var. Resist	100 Trim Cerm Vert 25T	Bourns 3299W-1-101	0038-0079
R1304	1	Resistor	MF 121 1% ¼W	MF4C RN55C-1210-F	0008-0623
R1305	1	Resistor	MF 9.09 k 0.1% ¼W	" RN55C-9091-B	0008-0624
R1306	1	Resistor	MF 1.01 k 0.1% ¼W	" RN55C-1011-B	0008-0625
R1307	1	Resistor	CF 1.0 M 5% ¼W	Amp. CR-25	0008-0292
R1308	1	Resistor	CF 100 5% ¼W	Amp. CR-25	0008-0172
R1309	1	Resistor	CF 100 5% ¼W	Amp. CR-25	0008-0172
R1310	1	Resistor	MF 9.09 k 1% ¼W	MF4C RN55C-9091-F	0008-0055
R1311	1	Resistor	MF 1.0 k 1% ¼W	" RN55C-1001-F	0008-0225
R1312	1	Resistor	MF 9.09 k 0.1% ¼W	" RN55C-9091-B	0008-0624
R1313	1	Resisotr	MF 1.01 k 0.1%	" RN55C-1011-B	0008-0625
R1314	1	Resistor	CF 1.0 M 5% ¼W	Amp. CR-25	0008-0292
R1315	1	Resistor	CF 100 5% ¼W	Amp. CR-25	0008-0172
R1316	1	Resistor	CF 100 5% ¼W	Amp. CR-25	0008-0172
R1317	1	Resistor	MF 9.09 k 1% ¼W	MF4C RN55C-9091-F	0008-0055
R1318	1	Resistor	MF 1.0 k 1% ¼W	" RN55C-1001-F	0008-0225
R1319	1	Resistor	MF 9.09 k 0.1% ¼W	" RN55C-9091-B	0008-0624
R1320	1	Resistor	MF 1.01 k 0.1% ¼W	" RN55C-1011-B	0008-0625
R1321	1	Resistor	CF 1.0 M 5% ¼W	Amp. CR-25	0008-0292
R1322	1	Resistor	CF 100 5% ¼W	Amp. CR-25	0008-0172
R1323	1	Resistor	CF 100 5% ¼W	Amp. CR-25	0008-0172
R1324	1	Resistor	MF 10 k 1% ¼W	MF4C RN55C-1002-F	0008-0311
R1325	1	Resistor	MF 4.64 k 1% ¼W	" RN55C-4641-F	0008-0324

ITEM	QTY	DESIGNATION	ORDERING INFORMATION VALUE, SIZE, TOL	MANUFACTURER, NOTES	STOCK NO.
R1326	1	Resistor	MF 10.4 k 0.1% ¼W	MF4C RN55C-1042-B	0008-0626
R1327	1	Resistor	MF 4.81 k 0.1% ¼W	" RN55C-4812-B	0008-0627
R1328	1	Resistor	CF 1.0 M 5% ¼W	Amp. CR-25	0008-0292
R1329	1	Resistor	CF 100 5% ¼W	Amp. CR-25	0008-0172
R1330	1	Resistor	CF 100 5% ¼W	Amp. CR-25	0008-0172
R1331	1	Resistor	MF 10 k 1% ¼W	MF4C RN55C-1002-F	0008-0311
R1332	1	Resistor	MF 5.11 k 1% ¼W	" RN55C-5111-F	0008-0347
R1333	1	Var.Resist	2 k 0.5W Cerm 25T	Bourns 3299X-1-202	0038-0137
R1334	1	Resistor	MF 3.92 k 0.1% ¼W	MF4C RN55C-3921-B	0008-0628
R1335	1	Resistor	MF 2.46 k 0.1% ¼W	" RN55C-2461-B	0008-0629
R1336	1	Resistor	MF 4.22 k 0.1% ¼W	" RN55C-4221-B	0008-0630
R1337	1	Resistor	CF 1.0 M 5% ¼W	Amp. CR-25	0008-0292
R1338	1	Resistor	CF 100 5% ¼W	Amp. CR-25	0008-0172
R1339	1	Resistor	CF 100 5% ¼W	Amp. CR-25	0008-0172
R1340	1	Resistor	MF 1.1 k 1% ¼W	MF4C RN55C-1101-F	0008-0050
R1341	1	Resistor	MF 976 1% ¼W	" RN55C-9760-F	0008-0529
R1342	1	Resistor	MF 876 0.1% ¼W	" RN55C-8760-B	0008-0631
R1343	1	Resistor	CF 1.0 M 5% ¼W	Amp. CR-25	0008-0292
R1344	1	Resistor	CF 100 5% ¼W	Amp. CR-25	0008-0172
R1345	1	Resistor	CF 100 5% ¼W	Amp. CR-25	0008-0172
R1346	1	Resistor	MF 9.09 k 1% ¼W	MF4C RN55C-9091-F	0008-0055
R1347	1	Resistor	MF 2.21 k 1% ¼W	MF4C RN55C-2211-F	0008-0356
R1348	1	Resistor	MF 5.62 k 1% ¼W	" RN55C-5621-F	0008-0297
R1349	1	Resistor	MF 17.8 k 1% ¼W	" RN55C-1782-F	0008-0332
R1350	1	Resistor	MF 17.8 k 1% ¼W	" RN55C-1782-F	0008-0332

ITEM	QTY	DESIGNATION	ORDERING INFORMATION VALUE, SIZE, TOL	MANUFACTURER, NOTES	STOCK NO.	
R1351	1	Resistor	MF 2.37 k 1% ½W	MF4C RN55C-2371-F	0008-0320	
R1352	1	Resistor	MF 2.21 k 1% ½W	" RN55C-2211-F	0008-0356	
R1353	1	Resistor	MF 2.37 k 1% ½W	" RN55C-2371-F	0008-0320	
R1354	1	Resistor	MF 2.21 k 1% ½W	" RN55C-2211-F	0008-0356	
R1355	1	Resistor	MF 22.1 k 1% ½W	" RN55C-2212-F	0008-0338	
R1356	1	Resistor	MF 75.0 1% ½W	" RN55C-75R0-F	0008-0223	
R1357		Resistor				
R1358	1	Resistor	CF 22 k 5% ½W	Amp. CR-25	0008-0187	
R1359		Resistor				
R1360	1	Resistor	MF 22.1 k 1% ½W	" RN55C-2212-F	0008-0338	
R1361	1	Resistor	MF 22.1 k 1% ½W	" RN55C-2212-F	00080338	
R1362		Resistor				
R1363	1	Resistor	MF 11 k 1% ½W	" RN55C-1102-F	0008-0056	
R1364		Resistor				
R1365		Resistor				
R1366		Resistor				
R1367	1	Resistor				
R1368						1)
R1369						1)
R1370	1	Resistor	MF 25.5 k 1% ½W	" RN55C-2552-F	0008-0622	
R1371	1	Resistor	MF 10 k 1% ½W	" RN55C-1002-F	0008-0311	
R1372	1	Resistor	MF 51.1 k 1% ½W	" RN55C-5112-F	0008-0067	
R1373	1	Resistor	MF 1 k 1% ½W	" RN55C-1001-F	0008-0225	
R1374	1	Resistor	MF 25.5 k 1% ½W	" RN55C-2552-B	0008-0622	
R1375	1	Resistor	MF 150 k 0.1% ½W	" RN55C-1503-B	0008-0633	

1) To be determined.

ITEM	QTY	DESIGNATION	ORDERING INFORMATION VALUE, SIZE, TOL	MANUFACTURER, NOTES	STOCK NO.	
R1376	1	Resistor	MF 34.4 k 0.1% ½W	MF4C RN55C-3442-B	0008-0634	
R1377	1	Resistor	MF 14.7 k 0.1% ½W	" RN55C-1472-B	0008-0635	
R1378	1	Resistor	MF 28.4 k 0.1% ½W	" RN55C-2842-B	0008-0636	
R1379	1	Resistor	MF 4.02 k 0.1% ½W	" RN55C-4021-B	0008-0637	
R1380	1	Resistor	CF 10 k 5% ½W	Amp. CR-25	0008-0185	
R1381	1	Resistor	MF 750 k 0.1% ½W	MF4C RN55C-7503-B	0008-0638	
R1382	1	Resistor	CF 10 k 5% ½W	Amp. CR-25	0008-0185	
R1383	1	Resistor	MF 100 k 0.1% ½W	MF4C RN55C-1003-B	0008-0639	
R1384	1	Resistor	MF 10.5 k 1% ½W	" RN55C-1052-F	0008-0640	
R1385	1	Resistor	MF 33.2 k 1% ½W	" RN55C-3322-F	0008-0288	
R1386	1	Resistor	MF 19.1 k 1% ½W	" RN55C-1912-F	0008-0641	
R1387	1	Resistor	MF 8.25 k 1% ½W	" RN55C-8251-F	0008-0329	
R1388	1	Resistor	CF 100 5% ½W	Amp. CR-25	0008-0172	
R1389	1	Resistor	CF 100 5% ½W	Amp. CR-25	0008-0172	
R1390	1	Var. Resist	500 Trim Cerm 25T	Bourns 3299W-1-501	0038-0138	
R1391	1	Var. Resist	25 k Trim Cerm25T	Bourns 3299W-1-253	0038-0115	
R1392	1	Resistor	MF 470 k 1% ½W	MF4C RN55C-4703-F	0008-0642	
R1393	1	Resistor	MF 255 1% ½W	" RN55C-2550-F	0008-0351	
R1394	1	Resistor	MF 4.32 k 1% ½W	" RN55C-4321-F	0008-0327	
R1395	1	Var. Resist	5 k Trim Cerm 25T	Bourns 3299W-1-502	0038-0078	
R1396	1	Resistor	MF 7.5 k 1% ½W	MF4C RN55C-7501-F	0008-0054	
R1397	1	Resistor	MF 20 k 1% ½W	" RN55C-2002-F	0008-0337	
R1398	1	Resistor	MF 4.99 k 1% ½W	" RN55C-4991-F	0008-0365	
R1399	1	Resistor	CF 3.3 k 5% ½W	Amp. CR-25	0008-0179	
R1400	1	Resistor	CF 100 5% ½W	Amp. CR-25	0008-0172	

ITEM	QTY	DESIGNATION	ORDERING INFORMATION VALUE, SIZE, TOL	MANUFACTURER, NOTES	STOCK NO
R13101	1	Resistor	CF 100 5% ¼W	Amp. CR-25	0008-0172
R13102	1	Resistor	CF 3.3 k 5% ¼W	Amp. CR-25	0008-0179
R13103	1	Resistor	MF 11 k 1% ¼W	MF4C RN55C-1102-F	0008-0056
R13104	1	Var. Resist	500 Trim Cerm 25T	Bourns 3299W-1-502	0038-0138
R13105	1	Resistor	MF 1.78 k 1% ¼W	MF4C RN55C-1781-F	0008-0331
R13106	1	Resistor	MF 37.4 k 1% ¼W	" RN55C-3742-F	0008-0643
R13107	1	Var. Resist	10 k Trim Cerm 25T	Bourns 3299W-1-103	0038-0018
R13108	1	Resistor	MF 100 k 1% ¼W	MF4C RN55C-1003-F	0008-0340
R13109	1	Resistor	CF 51 k 5% ¼W	Amp. CR-25	0008-0018
R13110	1	Resistor	CF 47 k 5% ¼W	Amp. CR-25	0008-0190
R13111	1	Resistor	CF 150 5% ¼W	Amp. CR-25	0008-0215
R13112	1	Resistor	CF 100 5% ¼W	Amp. CR-25	0008-0172
R13113	1	Resistor	CF 100 5% ¼W	Amp. CR-25	0008-0172
R13114	1	Resistor	CF 100 k 5% ¼W	Amp. CR-25	0008-0194
R13115					
R13116	1	Resistor	MF 25.5 k 1% ¼W	MF4C RN55C-2552-B	0008-0688
R13117	1	Resistor	MF 51.1 k 0.1% ¼W	" RN55C-5112-B	0008-0644
R13118	1	Resistor	MF 7.15 k 0.1% ¼W	" RN55C-7151-B	0008-0563
R13119	1	Resistor	CF 3.3 k 5% ¼W	Amp. CR-25	0008-0179
R13120	1	Resistor	CF 1.0 M 5% ¼W	Amp. CR-25	0008-0292
R13121	1	Resistor	CF 100 5% ¼W	Amp. CR-25	0008-0172
R13122	1	Resistor	CF 100 5% ¼W	Amp. CR-25	0008-0172
R13123	1	Resistor	Zero ohm Jumper	Tevis WL-40	0008-0612
R13124	1	Resistor	Zero ohm Jumper	Tevis WL-40	0008-0612
R13125	1	Resistor	Zero ohm Jumper	Tevis WL-40	0008-0612

ITEM	QTY	DESIGNATION	ORDERING INFORMATION VALUE, SIZE, TOL	MANUFACTURER, NOTES	STOCK NO
R13126		Resistor			
R13127		Resistor			
R13128		Resistor			
R13129		Resistor			
R13130		Resistor			
R13131		Resistor			
R13132		Resistor			
R13133	1	Resistor	CF 270 5% ¼W	Amp. CR-25	0008-0173
R13134	1	Resistor	MF 2.67 k 1% ¼W	MF4C RN55C-2671-F	0008-0336
R13135	1	Resistor	MF 1.78 k 1% ¼W	" RN55C-1781-F	0008-0331
R13136	1	Resistor	CF 100 k 5% ¼W	Amp. CR-25	0008-0194
R13137	1	Resistor	CF 100 k 5% ¼W	Amp. CR-25	0008-0194
R13138	1	Resistor	CF 100 k 5% ¼W	Amp. CR-25	0008-0194
R13139	1	Resistor	MF 9.09 k 1% ¼W	MF4C RN55C-9091-F	0008-0055
R13140	1	Resistor	MF 1.0 k 1% ¼W	" RN55C-1001-F	0008-0225
R13141	1	Resistor	MF 23.7 k 1% ¼W	" RN55C-2372-F	0008-0059
R13142	1	Resistor	MF 15.8 k 1% ¼W	" RN55C-1582-F	0008-0058
R13143	1	Resistor	MF 681 1% ¼W	" RN6810-F	0008-0047
R13144	1	Resistor	CF 5.6 k 5% ¼W	Amp. CR-25	0008-0375
R13145	1	Resistor	CF 4.7 k 5% ¼W	Amp. CR-25	0008-0182
R13146	1	Resistor			
R13147	1	Resistor	MF 158 k 1% ¼W	MF4C RN55C-1583-F	0008-0666
R13148	1	Resistor	MF 22.1 k 1% ¼W	" RN55C-2212-F	0008-0338
R13149	1	Resistor	CF 180 k 5% ¼W	Amp. CR-25	0008-0195
R13150	1	Resistor	CF 82 k 5% ¼W	Amp. CR-25	0008-0193

ITEM	QTY	DESIGNATION	ORDERING INFORMATION VALUE, SIZE, TOL	MANUFACTURER, NOTES	STOCK NO.
R13151	1	Resistor	MF 200 1% ½W	MF4C RN55C-2000-F	0008-0036
R13152	1	Resistor	MF 32.4 k 1% ½W	" RN55C-3242-F	0008-0308
R13153	1	Resistor	MF 32.4 k 1% ½W	" RN55C-3242-F	0008-0308
R13154	1	Resistor	MF 22.1 k 1% ½W	" RN55C-2212-F	0008-0338
R13155	1	Resistor	MF 2.0 k 1% ½W	MF4C RN55C-2001-F	0008 0360
R13156	1	Resistor	MF 1.78 k 1% ½W	" RN55C-1781-F	0008-0331
R13157	1	Resistor	MF 357 1% ½W	" RN55C-3570-F	0008-0042
R13158	1	Resistor	MF 200 k 1% ½W	" RN55C-2003-F	0008-0316
R13159	1	Resistor	CF 330 5% ½W	Amp. CR-25	0008-0242
R13160	1	Resistor	Zero ohm Jumper	Tevis WL-40	0008-0612

ITEM	QTY	DESIGNATION	ORDERING INFORMATION VALUE, SIZE, TOL	MANUFACTURER, NOTES	STOCK NO.
C1301	1	Cap Tant	22 uF 10% 15V	Sprague 196D226X9015 KA1	0032-0007
C1302	1	Cap Tant	22 uF 10% 15V	196D2269015 KA1	0032-0007
C1303	1	Cap Cer	27 pF 2% NPO	M/E 2222-631-10279	0002-0220
C1304	1	Cap Tant	22 uF 10% 15V	Sprague 196D226X9015 KA1	0032-0007
C1305	1	Cap Tant	22 uF 10% 15V	196D226X9015 KA1	0032-0007
C1306	1	Cap Tant	22 uF 10% 15V	196D226X9015 KA1	0032-0007
C1307	1	Cap Tant	22 uF 10% 15V	196D226X9015 KA1	0032-0007
C1308	1	Cap Tant	22 uF 10% 15V	196D226X9015 KA1	0032-0007
C1309	1	Cap Tant	22 uF 10% 15V	196D226X9015 KA1	0032-0007
C1310	1	Cap Tant	22 uF 10% 15V	196D226X9015 KA1	0032-0007
C1311	1	Cap Tant	22 uF 10% 15V	196D226X9015 KA1	0032-0007
C1312	1	Cap Tant	22 uF 10% 15V	196D226X9015 KA1	0032-0007
C1313	1	Cap Tant	22 uF 10% 15V	196D226X9015 KA1	0032-0007
C1314	1	Cap Tant	22 uF 10% 15V	196D226X9015 KA1	0032-0007
C1315	1	Cap Tant	22 uF 10% 15V	196D226X9015 KA1	0032-0007
C1316	1	Cap Tant	22 uF 10% 15V	196D226X9015 KA1	0032-0007
C1317	1	Cap Tant	22 uF 10% 15V	196D226X9015 KA1	0032-0007
C1318	1	Cap Tant	22 uF 10% 15V	196D226X9015 KA1	0032-0007
C1319	1	Cap Tant	22 uF 10% 15V	196D226X9015 KA1	0032-0007
C1320	1	Cap Cer	39 pF 2% NPO	M/E 2222-631-10399	0002-0221
C1321	1	Cap Cer	120 pF 2% NPO	M/E 2222-631-10121	0002-0223
C1322	1	Cap Tant	6.8 uF 10% 35V	Sprague 196D685X9035 KA1	0032-0086
C1323	1	Cap Tant	6.8 uF 10% 35V	196D685X9025 KA1	0032-0086
C1324					
C1325	1	Cap Tant	22 uF 10% 15V	Sprague 196D226X9015 KA1	0032-0007

ITEM	QTY	DESIGNATION	ORDERING INFORMATION VALUE, SIZE, TOL	MANUFACTURER, NOTES	STOCK NO
C1326					
C1327					
C1328					
C1329					
C1330					
C1331					
C1332	1	Cap Tant	3.3 uF 10% 35V	Sprague 196D335X9035 JA1	0032-0091
C1333	1	Cap Tant	3.3 uF 10% 35V	196D335X9035 JA1	0032-0091
C1334	1	Cap Tant	4.7 uF 10% 35V	196D475X9035 JA1	0032-0109
C1335	1	Cap Cer	0.0022 uF 10% 50V	Centralab CW15C222 K	0002-0273
C1336	1	Cap Mica	560 pF 2% 300V	ARCO DM15DC511G03	0002-0361
C1337	1	Cap Cer	56 pF 2% NPO	M/E 2222-631-10569	0002-0222
C1338	1	Cap Tant	22 uF 10% 15V	Sprague 196D226X9015 KA1	0032-0007
C1339	1	Cap Tant	22 uF 10% 15V	196D226X9015 KA1	0032-0007
C1340	1	Cap Tant	6.8 uF 10% 35V	196D685X9035 KA1	0032-0086
C1341	1	Cap Tant	6.8 uF 10% 35V	196D685X9035 KA1	0032-0086
C1342	1	Cap Cer	0.1 uF 20% 50V	RE 50-104 M	0002-0377
C1343	1	Cap Cer	0.1 uF 20% 50V	RE 50-104 M	0002-0377
C1344	1	Cap Tant	22 uF 10% 15V	Sprague 196D226X9015 KA1	0032-0007
C1345	1	Cap Tant	22 uF 10% 15V	196D226X9015 KA1	0032-0007
C1346	1	Cap Cer	56 pF 2% NPO	M/E 2222-631-10569	0002-0222
C1347	1	Cap Polycarb	1.0 uF 5% 63V	ERC MKC 1860-510/06	0002-0295
C1348	1	Cap Cer	0.1 uF 10% 50V	Centralab CW30C104 K	0002-0029
C1349	1	Cap Cer	0.22 uF 20% 50V	Centralab CW30C224 K	0002-0378
C1350	1	Cap Cer	0.0015 uF 10% 50V	Centralab CW15C152 K	0002-0285

ITEM	QTY	DESIGNATION	ORDERING INFORMATION VALUE, SIZE, TOL	MANUFACTURER, NOTES	STOCK NO
C1351	1	Cap Tant	6.8 uF 10% 35V	Sprague 196D685X9035 KA1	0032-0086
C1352	1	Cap Tant	6.8 uF 10% 35V	196D685X9035 KA1	0032-0086
C1353					
C1354	1				
C1355	1	Cap Cer	15 pF 2% NPO	M/E 2222-631-10159	0002-0049
C1356	1	Cap Cer	0.22 uF 10% 50V	Centralab CW30C224 K	0002-0263
C1357	1	Cap Cer	0.1 uF 10% 50V	Centralab CW30C104 K	0002-0029
C1358	1	Cap Cer	18 pF 2% NPO	M/E 2222-631-[illegible]	0002-0338
C1359	1	Cap Cer	0.1 uF 10% 50V	Centralab CW30C104 K	0002-0029
C1360	1	Cap Tant	22 uF 10% 15V	Sprague 196D226X9015 KA1	0032-0007
C1361	1	Cap Tant	22 uF 10% 15V	196D226X9015 KA1	0032-0007
C1362	1	Cap Tant	22 uF 10% 15V	Sprague 196D226X9015 KA1	0032-0007
C1363	1	Cap Tant	22 uF 10% 15V	196D226X9015 KA1	0032-0007
C1364					
C1365	1	Cap Cer	0.0033 uF 10% 50V	Centralab CW15C332 K	0002-0272
C1366	1	Cap Cer	0.0082 uF 10% 50V	Centralab CW15C822 K	0002-0282
C1367	1	Cap Tant	22 uF 10% 15V	Sprague 196D226X9015 KA1	0032-0007
C1370	1	Cap Tant	22 uF 10% 15V	198D226X9015 KA1	0032-0007
U1301	1	I.C.	Quad SPST CMOS	Harris HI1-201-5	0035-0258
U1302	1	I.C.	J FET Op-Amp	Nat. LF 357 BN	0035-0302
U1303	1	I.C.	Dual SPST CMOS	Harris HI2-200-5	0035-0230
U1304	1	I.C.	J FET Op-Amp	Nat. LF 357 BN	0035-0302
U1305	1	I.C.	Dual SPST CMOS	Harris HI2-200-5	0035-0230
U1306	1	I.C.	J FET Op-Amp	Nat. LF 356 N	0035-0325
U1307	1	I.C.	Dual SPST CMOS	Harris HI2-200-5	0035-0230

ITEM	QTY	DESIGNATION	ORDERING INFORMATION VALUE, SIZE, TOL	MANUFACTURER, NOTES	STOCK NO.	
U1308	1	I.C.	J FET Op-Amp	Nat. LF 356 N	0035-0325	
U1309	1	I.C.	MUX CMOS	Motorola MC 14051 BCP	0035-0228	
U1310	1	I.C.	J FET Op-Amp	Nat. LF 355 BN	0035-0259	
U1311	1	I.C.	MUX CMOS	Motorola MC 14051 BCP	0035-0228	
U1312	1	I.C.	J FET Dual Op-Amp	Nat LF 353 N	0035-0303	
U1313	1	I.C.	J FET Op-Amp	Nat. LF 356 BN	0035-0325	
U1314	1	I.C.	J FET Op-Amp	Nat. LF 347 N	0035-0314	
U1315	1	I.C.	Quad SPST CMOS	Harris HI 1-201-5	0035-0258	
U1316	1	I.C.	Quad 2-Inp NAND CMOS	Motorola MC 14011 BCP	0035-0186	
U1317	1	I.C.	J FET O-Amp	Nat. LF 355 BN	0035-0259	
U1318	1	I.C.	RMS-DC Converter	AD 536 AJH	0035-0327	
U1319	1	I.C.	Quad Comparator	Nat. LM 339N	0035-0167	
U1320	1	I.C.	J FET Op-Amp	Nat. LF 355 BN	0035-0259	
U1321	1	I.C.	Op-Amp	RCA CA 3130	0035-0268	
U1322	1	I.C.	Dual Mono-Flap CMOS	Motorola MC 14538 BCP	0035-0328	
U1323	1	I.C.	Up/Down Count CMOS	Motorola MC 14510 BCP	0035-0278	
U1324	1	I.C.	Up/Down Count CMOS	Motorola MC 14510 BCP	0035-0278	
U1325	1	I.C.	Quad 2-Inp NAND CMOS	Motorola MC 14011 BCP	0035-0186	
U1326	1	I.C.	Hex Inverter CMOS	Motorola MC 14049 BCP	0035-0179	
U1327	1	I.C.	Quad 2-Inp NOR CMOS	Motorola MC 14001 BCP	0035-0189	
U1328	1	I.C.	Quad 2-Inp NOR CMOS	Motorola MC 14001 BCP	0035-0189	
U1329	1	I.C.	J-FET Dual	Nat. LF 353 N	0035-0303	
U1330	1	I.C.	DPDT Dual	Harris HI 1-5043-5	0035-0316	
U1331	1	I.C.	SPST CMOS	Harris HI 2-200-5	0035-0230	
U1332	1	I.C.	J-FET Op-Amp	Nat. LF 355 BN	0035-0259	

ITEM	QTY	DESIGNATION	ORDERING INFORMATION VALUE, SIZE, TOL	MANUFACTURER, NOTES	STOCK NO.	
CR1301	1	Diode	Hot Carrier	HP 5082-2800	0037-0018	
CR1302	1	Diode	Hot Carrier	HP 5082-2800	0037-0018	
CR1303	1	Diode	Switching 1N 4448	Jedec	0037-0001	
CR1304	1	Diode	Switching 1N 4448	Jedec	0037-0001	
CR1305	1	Diode	Switching 1N 4448	Jedec	0037-0001	
CR1306	1	Diode	Switching 1N 4448	Jedec	0037-0001	
CR1307	1	Diode	Switching 1N 4448	Jedec	0037-0001	
CR1308	1	Diode	Switching 1N 4448	Jedec	0037-0001	
CR1309	1	Diode	Switching 1N 4448	Jedec	0037-0001	
CR1310	1	Diode	Hot Carrier	HP 5082-2800	0037-0018	
CR1311	1	Diode	Hot Carrier	HP 5082-2800	0037-0018	
VR1301	1	Zener Diode	Voltage Ref.	National LM 329 BZ	0037-0201	

ITEM	QTY	DESIGNATION	ORDERING INFORMATION VALUE, SIZE, TOL	MANUFACTURER, NOTES	STOCK NO.	
12						
13	1	Shield	Assembly	WGI 9202-7003-043/B		
14	4	Screw	M 3x5mm Cyl CrSl	ZLK 1875 A	0005-0200	
15	4	Washer	M 3 Flat		0005-0274	
16						
S1301	1					
S1302	1	Switch Assembly 4 S		WGI 9202-8003-00/B		
S1303	1					
S1304	1					
S1305	1	Switch 1 S		WGI 9202-8004-00/B		
TP 1-TP 3	3	Rivet	Testpoint	WGR 00-3000.19/5	0003-0274	
1	1	P.C. Board	A / D drilled	WGI 9202-7003-02		
2	6	Spacer	Switch,	WGI 9202-0100-07/A		
3	4	Mtg. Pad	10 pin (TO-100)	Milton Ross 10311 DAP	0028-0155	
4	1	Mtg. Pad	8 pin I.C.	Thermalloy 7717-8 DAP	0028-0128	
5	1	Socket Terminal Carrier (E1...E7)		Augat 716 AG 2D	0034-0025	
6	2	Handle	P.C. Board gy	WGR 00-3705.55/4	0023-0112	
7	4	Rivet	f. Handle	WGR 5 WN 32/3/0	0005-0021	
8						
9	1	Label	Signal Triangle	WGR 0000-7575.994	0021-0029	
10						
11						

1) 7 Terminals used per P.C. Board.

ITEM	QTY	DESIGNATION	ORDERING INFORMATION VALUE, SIZE, TOL	MANUFACTURER, NOTES	STOCK NO.
R1401	1	Resistor	CF 3.3 k 5% ¼W	Amp. CR-25	0008-0179
R1402	1	Resistor	CF 680 k 5% ¼W	Amp. CR-25	0008-0246
R1403	1	Resistor	CF 150 k 5% ¼W	Amp. CR-25	0008-0196
R1404	1	Resistor	CF 2.2 k 5% ¼W	Amp. CR-25	0008-0216
R1405	1	Resistor	CF 2.2 k 5% ¼W	Amp. CR-25	0008-0216
R1406	1	Resistor	CF 10 k 5% ¼W	Amp. CR-25	0008-0185
R1407	1	Resistor	CF 39 k 5% ¼W	Amp. CR-25	0008-0016
R1408	1	Resistor	CF 560 5% ¼W	Amp. CR-25	0008-0250
R1409	1	Resistor	CF 82 k 5% ¼W	Amp. CR-25	0008-0193
R1410	1	Resistor	CF 6.8 k 5% ¼W	Amp. CR-25	0008-0291
R1411	1	Resistor	MF 46.4 k 1% ¼W	MF4C RN55C-46420F	0008-0066
R1412	1	Resistor	CF 1.0 M 5% ¼W	Amp. CR-25	0008-0292
R1413	1	Resistor	MF 100 k 1% ¼W	MF4C RN55C-1003-F	0008-0340
R1414	1	Resistor	CF 4.7 k 5% ¼W	Amp. CR-25	0008-0182
R1415	1	Resistor	CF 10 k 5% ¼W	Amp. CR-25	0008-0185
R1416		Resistor			
R1417	1	Resistor	CF 100 k 5% ¼W	Amp. CR-25	0008-0194
R1418	1	Resistor	CF 100 k 5% ¼W	Amp. CR-25	0008-0194
R1419	1	Resistor	CF 390 5% ¼W	Amp. CR-25	0008-0208
R1420	1	Resistor	CF 100 k 5% ¼W	Amp. CR-25	0008-0194
R1421	1	Resistor	CF 100 k 5% ¼W	Amp. CR-25	0008-0194
R1422	1	Resistor	MF 11 k 1% ¼W	MF4C RN55C-1102-F	0008-0056
R1423	1	Resistor	MF 100 k 1% ¼W	MF4C RN55C-1003-F	0008-0340
R1424	1	Resistor	CF 3.9 M 5% ¼W	Amp. CR-25	0008-0483
R1425	1	Ressitor	CF 100 k 5% ¼W	Amp. CR-25	0008-0194

ITEM	QTY	DESIGNATION	ORDERING INFORMATION VALUE, SIZE, TOL	MANUFACTURER, NOTES	STOCK NO.
R1426	1	Resistor	CF 100 k 5% ¼W	Amp. CR-25	0008-0194
R1427	1	Resistor	CF 470 k 5% ¼W	Amp. CR-25	0008-0206
R1428	1	Resistor	CF 12 k 5% ¼W	Amp. CR-25	0008-0184
R1429	1	Resistor	CF 2.7 k 5% ¼W	Amp. CR-25	0008-0213
R1430	1	Resistor	CF 330 k 5% ¼W	Amp. CR-25	0008-0403
C1401	1	Cap Cer	0.01 uF 10% 50V	Centralab CW15C103 K	0002-0270
C1402	1	Cap Cer	0.01 uF 10% 50V	Centralab CW15C103 K	0002-0270
C1403	1	Cap Cer	0.01 uF 10% 50V	Centralab CW15C103 K	0002-0270
C1404					
C1405					
C1406	1	Cap Cer	0.01 uF 10% 50V	Centralab CW15C103 K	0002-0270
C1407	1	Cap Cer	0.01 uF 10% 50V	Centralab CW15C103 K	0002-0270
C1408	1	Cap Cer	100 pF 2% NPO	M/E 2222-631-10101	0002-0010
C1409	1	Cap Cer	0.01 uF 10% 50V	Centralab CW15C103 K	0002-0270
C1410	1	Cap Cer	0.01 uF 10% 50V	Centralab CW15C103 K	0002-0270
C1411	1	Cap Cer	0.01 uF 10% 50V	Centralab CW15C103 K	0002-0270
C1412	1	Cap Cer	0.01 uF 10% 50V	Centralab CW15C103 K	0002-0270
C1413	1	Cap Cer	0.01 uF 10% 50V	Centralab CW15C103 K	0002-0270
C1414	1	Cap Cer	0.01 uF 10% 50V	Centralab CW15C103 K	0002-0270
C1415	1	Cap Cer	0.01 uF 10% 50V	Centralab CW15C103 K	0002-0270
C1416	1	Cap Tant	1.0 uF 10% 35V	Sprague 196D105X9035 HA1	0002-0092
C1417	1	Cap Cer	0.1 uF 10% 50V	Centralab CW30C104 K	0002-0029

ITEM	QTY	DESIGNATION	ORDERING INFORMATION VALUE, SIZE, TOL	MANUFACTURER, NOTES	STOCK NO.
C1418	1	Cap Cer	22 pF 2% NPO	M/E 2222-631-10229	0002-0051
C1419	1	Cap Cer	0.01 uF 10% 50V	Centralab CW15C103 K	0002-0270
C1420	1	Cap Cer	0.01 uF 10% 50V	Centralab CW15C103 K	0002-0270
C1421	1	Cap Cer	0.01 uF 10% 50V	Centralab CW15C103 K	0002-0270
C1422	1	Cap Cer	0.01 uF 10% 50V	Centralab CW15C103 K	0002-0270
C1423	1	Cap Cer	0.01 uF 10% 50V	Centralab CW15C103 K	0002-0270
C1424	1	Cap Cer	0.01 uF 10% 50V	Centralab CW15C103 K	0002-0270
C1425	1	Cap Cer	0.01 uF 10% 50V	Centralab CW15C103 K	0002-0270
C1426	1	Cap Cer	0.01 uF 10% 50V	Centralab CW15C103 K	0002-0270
C1427	1	Cap Cer	0.01 uF 10% 50V	Centralab CW15C103 K	0002-0270
C1428	1	Cap Cer	0.01 uF 10% 50V	Centralab CW15C103 K	0002-0270
C1429	1	Cap Cer	0.01 uF 10% 50V	Centralab CW15C103 K	0002-0270
C1430	1	Cap Cer	0.01 uF 10% 50V	Centralab CW15C103 K	0002-0270
C1431	1	Cap Cer	0.01 uF 10% 50V	Centralab CW15C103 K	0002-0270
C1432	1	Cap Cer	0.01 uF 10% 50V	Centralab CW15C103 K	0002-0270
C1433	1	Cap Cer	0.01 uF 10% 50V	Centralab CW15C103 K	0002-0270
C1434	1	Cap Cer	0.01 uF 10% 50V	Centralab CW15C103 K	0002-0270
C1435	1	Cap Cer	0.01 uF 10% 50V	Centralab CW15C103 K	0002-0270
C1436	1	Cap Cer	0.01 uF 10% 50V	Centralab CW15C103 K	0002-0270
C1437	1	Cap Cer	0.01 uF 10% 50V	Centralab CW15C103 K	0002-0270
C1438	1	Cap Cer	0.01 uF 10% 50V	Centralab CW15C103 K	0002-0270
C1439	1	Cap Cer	0.01 uF 10% 50V	Centralab CW15C103 K	0002-0270
C1440	1	Cap Cer	0.01 uF 10% 50V	Centralab CW15C103 K	0002-0270
C1441	1	Cap Cer	0.01 uF 10% 50V	Centralab CW15C103 K	0002-0270
C1442	1	Cap Cer	0.01 uF 10% 50V	Centralab CW15C103 K	0002-0270

ITEM	QTY	DESIGNATION	ORDERING INFORMATION VALUE, SIZE, TOL	MANUFACTURER, NOTES	STOCK NO.
C1443	1	Cap Cer	0.01 uF 10% 50V	Centralab CW1C103 K	0002-0270
C1444	1	Cap Cer	0.01 uF 10% 50V	Centralab CW15C103K	0002-0270
C1445	1	Cap Cer	18 pF 2% NPO	M/E 2222-631-10189	0002-0050
U1401	1	I.C.	Quad Comparator	Nat. LM 339 N	0035-0167
U1402	1	I.C.	Phase Lock Loop	Motorola MC 14046 BCP	0035-0155
U1403	1	I.C.	4-Bit Decade Count	Nat. MM 74C90 N	0035-0313
U1404	1	I.C.	Quad Exclusive OR	Motorola MC 14070 BCP	0035-0318
U1405		I.C.			
U1406	1	I.C.	BCD to 7 Segm.Driv	Motorola MC 14543 BCP	0035-0250
U1407	1	I.C.	BCD to 7 Segm.Driv	Motorola MC 14543 BCP	0035-0250
U1408	1	I.C.	BCD to 7 Segm.Driv	Motorola MC 14543 BCP	0035-0250
U1409	1	I.C.	Voltage Detector	Intersil ILC 8211CPA	0035-0330
U1410	1	I.C.	Quad Ex OR	Motorola MC 14070 BCP	0035-0318
U1411	1	I.C.	Hex Invert Buffer	Motorola MC 14049 BCP	0035-0179
U1412	1	I.C.	Quad 2-Inp AND	Motorola MC 14081 BCP	0035-0181
U1413	1	I.C.	NBCD Adder	Motorola MC 14560 BCP	0035-0256
U1414	1	I.C.	NBCD Adder	Motorola MC 14560 BCP	0035-0256
U1415	1	I.C.	NBCD Adder	Motorola MC 14560 BCP	0035-0256
U1416	1	I.C.	Voltage Detector	Intersil ILC 8212 CPA	0035-0331
U1417	1	I.C.	Triple 3-Inp NAND	Motorola MC 14023 BCP	0035-0183
U1418	1	I.C.	Hex Invert Buffer	Motorola MC 14049 BCP	0035-0179

ITEM	QTY	DESIGNATION	ORDERING INFORMATION VALUE, SIZE, TOL	MANUFACTURER, NOTES	STOCK NO.
U1419	1	I.C.	Dual D F-F	Motorola MC 14013 BCP	0035-0182
U1420	1	I.C.	Quad 2-Inp NOR	Motorola MC 14001 BCP	0035-0189
U1421	1	I.C.	Decade Count Divide	Motorola MC 14017 BCP	0035-0110
U1422	1	I.C.	Hex Invert Buffer	Motorola MC 14049 BCP	0035-0179
U1423	1	I.C.	9's Complimenter	Motoorla MC 14561 BCP	0035-0319
U1424	1	I.C.	9's Complimenter	Motorola MC 14561 BCP	0035-0319
U1425	1	I.C.	9's Complimenter	Motorola MC 14561 BCP	0035-0319
U1426	1	I.C.	14 Stage Counter	Motorola MC 14040 BCP	0035-0262
U1427	1	I.C.	Dual 4-Inp NAND	Motorola MC 14012 BCP	0035-0123
U1428	1	I.C.	7 Stage Counter	Motorola MC 14024 BCP	0035-0111
U1429	1	I.C.	Quad 2-Inp AND	Motorola MC 14081 BCP	0035-0181
U1430	1	I.C.	Dual J-K F-F	Motorola MC 14027 BCP	0035-0112
U1431	1	I.C.	Daul J-K F-F	Motorola MC 14027 BCP	0035-0112
U1432	1	I.C.	Triple 3-Inp NOR	Motorola MC 14025 BCP	0035-0320
U1433	1	I.C.	NBCD Adder	Motorola MC 14560 BCP	0035-0256
U1434	1	I.C.	NBCD Adder	Motorola MC 14560 BCP	0035-0256
U1435	1	I.C.	Dual Up-Counter	Motorola MC 14518 BCP	0035-0107
U1436	1	I.C.	Dual D F-F	Motorola MC 14013 BCP	0035-0182
U1437	1	I.C.	7 Stage Counter	Motorola MC 14024 BCP	0035-0111
U1438	1	I.C.	Quad 2-Inp NOR	Motorola MC 14001 BCP	0035-0189
U1439	1	I.C.	Triple 3-Inp NOR	Motorola MC 14025 BCP	0035-0320
U1440	1	I.C.	Quad 2-Inp NOR	Motorola MC 14001 BCP	0035-0189
U1441	1	I.C.	Quad Exclusive OR	Motorola MC 14070 BCP	0035-0318
U1442		I.C.			
U1443	1	I.C.	Quad 2 Inp AND	Motorola MC 14081 BCP	0035-0181

ITEM	QTY	DESIGNATION	ORDERING INFORMATION VALUE, SIZE, TOL	MANUFACTURER, NOTES	STOCK NO.
U1444	1	I.C.	3 Inp.	Motorola MC 14075 BCP	0035-0335
U 1445	1	I.C.	Hex Tpe-D F-F	Motorola MC 14174BCP	0035-0309
Q 1401	1	Transistor	BYC-59 D NPN	NCS BCY 59 D	0010-0184
VR1401	1	Zener Diode	Reference TO-92	Nat. LM 329 BZ	0037-0201
J 1401	1	Socket	40 pin I.C. DIP	Augat 540 AG 37D	0034-0027
J1402	1	Socket	16 pin I.C. DIP	Augat 516 AG-37 F	0034-0023
P1402	1	Jumper Plug	Dual In-Line 16 pin	CA-16 NW	0003-0351
	1	Cover	f. Jumper Plug	CA-16-400-000	0003-0351
1	1	P.C. Board	Arith., drilled	WGI 9202-7004-02	
2	2	Handle	P.C. Board gy	WGR 00-3705.55/4	0028-0112
3	4	Rivet	f. Handle	WGR 5 WN 33/3/0	0005-0021
4	1	Label	Signal Triangle	WGR 0000-7575.994	0021-0029

ITEM	QTY	DESIGNATION	ORDERING INFORMATION VALUE, SIZE, TOL	MANUFACTURER, NOTES	STOCK NO.
R1501	1	Resistor	CF 56 5% ¼W	Amp. CR-25	0008-0239
R1502	1	Resistor	CF 3.3 M 5% ¼W	Amp. CR-25	0008-0575
R1503	1	Resistor	CF 2.2 k 5% ¼W	Amp. CR-25	0008-0216
R1504	1	Resistor	CF 150 k 5% ¼W	Amp. CR-25	0008-0196
R1505	1	Resistor	CF 560 k 5% ¼W	Amp. CR-25	0008-0210
R1506	1	Resistor	CF 220 k 5% ¼W	Amp. CR-25	0008-0251
R1507	1	Resistor	MF 30.1 k 1% ¼W	MF4C RN55C-3012-F	0008-0061
R1508	1	Resistor	MF 3.57 k 1% ¼W	" RN55C-3571-F	0008-0053
R1509	1	Resistor	CF 22 k 5% ¼W	Amp. CR-25	0008-0187
R1510	1	Resistor	CF 33 k 5% ¼W	Amp. CR-25	0008-0249
R1511	1	Resistor	CF 33 k 5% ¼W	Amp. CR-25	0008-0249
R1512	1	Resistor	CF 6.8 k 5% ¼W	Amp. CR-25	0008-0291
R1513	1	Resistor	CF 33 k 5% ¼W	Amp. CR-25	0008-0249
R1514	1	Resistor	CF 22 k 5% ¼W	Amp. CR-25	0008-0187
R1515	1	Resistor	CF 56 5% ¼W	Amp. CR-25	0008-0239
R1516	1	Resistor	CF 10 k 5% ¼W	Amp. CR-25	0008-0185
R1517	1	Resistor	CF 10 k 5% ¼W	Amp. CR-25	0008-0185
R1518	1	Resistor	CF 150 k 5% ¼W	Amp. CR-25	0008-0196
R1519	1	Resistor	MF 15.8 k 1% ¼W	MF4C RN55C-1582-F	0008-0058
R1520	1	Resistor	MF 10 k 1% ¼W	" RN55C-1002-F	0008-0311
R1521	1	Resistor	MF 20 k 1% ¼W	" RN55C-2002-F	0008-0337
R1522	1	Resistor	MF 15.8 k 1% ¼W	" RN55C-1582-F	0008-0058
R1523	1	Resistor	MF 10 k 1% ¼W	" RN55C-1002-F	0008-0311
R1524	1	Resistor	MF 20 k 1% ¼W	" RN55C-2002-F	0008-0337
R1525	1	Resistor	MF 15.8 k 1% ¼W	" RN55C-1582-F	0008-0058

ITEM	QTY	DESIGNATION	ORDERING INFORMATION VALUE, SIZE, TOL	MANUFACTURER, NOTES	STOCK NO.
R1526	1	Resistor	MF 10 k 1% ¼W	MF4C RN55C-1002-F	0008-0311
R1527	1	Resistor	MF 20 k 1% ¼W	" RN55C-2002-F	0008-0337
R1528	1	Resistor	MF 15.8 k 1% ¼W	" RN55C-1582-F	0008-0058
R1529	1	Resistor	MF 10 k 1% ¼W	" RN55C-1002-F	0008-0311
R1530	1	Resistor	MF 20 k 1% ¼W	" RN55C-2002-F	0008-0337
R1531	1	Resistor	CF 75 k 5% ¼W	Amp. CR-25	0008-0020
R1532	1	Var. Resist	22 k Cerm Horiz .5W	WW 17/2/8	0038-0089
R1533	1	Resistor	CF 82 k 5% ¼W	Amp. CR-25	0008-0193
R1534	1	Resistor	CF 1.0 M 5 ¼W	Amp. CR-25	0008-0292
R1535	1	Resistor	MF 5.62 k 0.1% ¼W	MF4C RN55C-5621-B	0008-0562
R1536	1	Resistor	CF 10 k 5% ¼W	Amp. CR-25	0008-0185
R1537	1	Resistor	MF 5.62 k 0.1% ¼W	MF4C RN55C-5621-B	0008-0562
R1538	1	Resistor	CF 470 5% ¼W	Amp. CR-25	0008-0174
R1539	1	Resistor	CF 22 k 5% ¼W	Amp. CR-25	0008-0187
R1540	1	Resistor	CF 3.9 k 5% ¼W	Amp. CR-25	0008-0181
R1541	1	Resistor	CF 4.7 k 5% ¼W	Amp. CR-25	0008-0182
R1542	1	Resistor	MF 2.37 k 1% ¼W	MF4C RN55C-2371-F	0008-0320
R1543	1	Resistor	MF 30.1 k 1% ¼W	" RN55C-3012-F	0008-0061
R1544	1	Resistor	MF 4.32 k 1% ¼W	" RN55C-4321-F	0008-0327
R1545	1	Resistor	MF 17.8 k 1% ¼W	" RN55C-1782-F	0008-0332
R1546	1	Resistor	MF 6.19 k 1% ¼W	" RN55C-6191-F	0008-0326
R1547	1	Resistor	MF 11.8 k 1% ¼W	" RN55C-1182-F	0008-0057
R1548	1	Resistor	MF 10.7 k 1% ¼W	" RN55C-1072-F	0008-0509
R1549	1	Resistor	MF 26.7 k 1% ¼W	" RN55C-2672-F	0008-0060
R1550	1	Resistor	CF 15 5% ¼W	Amp. CR-25	0008-0001

ITEM	QTY	DESIGNATION	ORDERING INFORMATION VALUE, SIZE, TOL	MANUFACTURER, NOTES	STOCK NO.
R1551	1	Resistor	CF 15 5% ½W	Amp. CR-25	0008-0001
R1552	1	Resistor	CF 15 5% ½W	Amp. CR-25	0008-0001
R1553	1	Resistor	CF 15 5% ½W	Amp. CR-25	0008-0001
R1554	1	Resistor	CF 10 k 5% ½W	Amp. CR-25	0008-0185
R1555	1	Resistor	CF 470 k 5% ½W	Amp. CR-25	0008-0206
R1556	1	Resistor	CF 3.3 k 5% ½W	Amp. CR-25	0008-0179
R1557	1	Resistor	CF 470 k 5% ½W	Amp. CR-25	0008-0206
R1558	1	Resistor	CF 3.3 M 5% ½W	Amp. CR-25	0008-0575
R1559	1	Var. Resist	22 K Horiz Cerm 0.5W	WN 17/2/8	0038-0089
R1560	1	Resistor	CF 1.8 k 5% ½W	Amp. CR-25	0008-0244
R1561	1	Resistor	CF 1.8 k 5% ½W	Amp. CR-25	0008-0244
R1562	1	Resistor	CF 22 k 5% ½W	Amp. CR-25	0008-0187
R1563	1	Resistor	CF 22 k 5% ½W	Amp. CR-25	0008-0187
R1564	1	Resistor	CF 10 k 5% ½W	Amp. CR-25	0008-0185
R1565	1	Resistor	CF 2.7 k 5% ½W	Amp. CR-25	0008-0213
R1566	1	Resistor	CF 33 k 5% ½W	Amp. CR-25	0008-0249
R1567	1	Resistor	CF 10 k 5% ½W	Amp. CR-25	0008-0185
R1568	1	Resistor	CF 100 k 5% ½W	Amp. CR-25	0008-0194
R1569	1	Resistor	CF 100 k 5% ½W	Amp. CR-25	0008-0194
R1570	1	Resistor	CF 100 k 5% ½W	Amp. CR-25	0008-0194
R1571	1	Resistor	CF 100 k 5% ½W	Amp. CR-25	0008-0194
R1572	1	Resistor	CF 100 5% ½W	Amp. CR-25	0008-0172
R1573	1	Resistor	Zero ohm Jumper	Tevis WL-40	0008-0612
R1574	1	resistor	Zero ohm Jumper	Tevis WL-40	0008-0612
R1575	1	Resistor	Zero ohm Jumper	Tevis WL-40	0008-0612

ITEM	QTY	DESIGNATION	ORDERING INFORMATION VALUE, SIZE, TOL	MANUFACTURER, NOTES	STOCK NO.
R1576	1	Resistor	Zero ohm Jumper	Tevis WL-40	0008-0612
R1577	1	Resistor	Zero ohm Jumper	Tevis WL-40	0008-0612
R1378	1	Resistor	CF 100 k 5% ½W	Amp. CR-25	0008-0194
R1379	1	Resistor	CF 100 k 5% ½W	Amp. CR-25	0008-0194
R1380	1	Resistor	CF 100 k 5% ½W	Amp. CR-25	0008-0194
R1381	1	Resistor	CF 1.0 k 5% ½W	Amp. CR-25	0008-0203
C1501	1	Cap Cer	10 pF 2% NPO	M/E 2222-631-10109	0002-0047
C1502					
C1503	1	Cap Cer	47 pF 2% NPO	M/E 2222-631-10479	0002-0053
C1504	1	Cap Tant	6.8 uF 10% 35V	Sprague 196D685-X9035 KA1	0002-0086
C1505	1	Cap Cer	47 pF 2% NPO	M/E 2222-631-10479	0002-0053
C1506	1	Cap Tant	22 uF 10% 15V	Sprague 196D226X9015 KA1	0032-0007
C1507	1	Cap Cer	22 pF 2% NPO	M/E 2222-631-10229	0002-0051
C1508	1	Cap Cer	82 pF 2% NPO	M/E 2222-631-10829	0002-0055
C1509	1	Cap Cer	0.22 uF 10% 50V	Centralab CW30C224 K	0002-0263
C1510	1	Cap Cer	0.22 uF 10% 50V	Centralab CW30C224 K	0002-0263
C1511	1	Cap Cer	0.22 uF 10% 50V	Centralab CW30C224 K	0002-0263
C1512	1	Cap Tant	22 uF 10% 15V	Sprague 196D226X9015 KA1	0032-0007
C1513	1	Cap Tant	1.0 uF 10% 35V	196D105X9035 HA1	0032-0092
C1514	1	Cap Mica	1200 pF 2% 300V	ARCO DM15DC122G03	0002-0373
C1515	1	Cap Tant	6.8 uF 10% 35V	Sprague 196D685X9035 KA1	0032-0086
C1516	1	Cap Cer	10 pF 2% 50V	M/E 2222-631-10109	0002-0047
C1517	1	Cap Cer	0.1 uF 10% 50V	Centralab CW30C104 K	0002-0029
C1518		Cap Mica	1200 pF 2% 300V	ARCO DM15DC122G03	0002-0373
C1519		Cap Cer	47 pF 2% NPO	M/E 2222-631-10479	0002-0053

ITEM	QTY	DESIGNATION	ORDERING INFORMATION VALUE, SIZE, TOL	MANUFACTURER, NOTES	STOCK NO.
C1520	1	Cap Mica	1200 pF 2% 300V	ARCO DM15DC122G03	0002-0373
C1521	1	Cap Cer	47 pF 2% NPO	M/E 2222-631-10479	0002-0053
C1522	1	Cap Mica	1200 pF 2% 300V	ARCO DM15DC122G03	0002-0373
C1523	1	Cap Cer	47 pF 2% NPO	M/E 2222-631-10479	0002-0053
C1524	1	Cap Mica	1200 pF 2% 300V	ARCO DM15DC122G03	0002-0373
C1525	1	Cap Cer	47 pF 2% NPO	M/E 2222-631-10479	0002-0053
C1526	1	Trimmer	2 - 8 pF NPO	ERIE 538-011	0002-0244
C1527	1	Cap Cer	0.1 uF 10% 50V	Centralab CW30C104 K	0002-0029
C1528	1	Cap Tant	22 uF 10% 15V	Sprague 196D226X9015 KA1	0032-0007
C1529	1	Cap Tant	6.8 uF 10% 35V	196D685X9035 KA1	0032-0086
C1530	1	Cap Tant	6.8 uF 10% 35V	196D685X9035 KA1	0032-0086
C1531	1	Cap Mica	360 pF 2% 300V	ARCO DM10DC361G03	0002-0372
C1532	1	Cap Mica	1200 pF 2% 300V	ARCO DM15DC122G03	0002-0373
C1533	1	Cap Mica	390 pF 2% 100V	ARCO DM10DA391G03	0002-0367
C1534	1	Cap Mica	1200 pF 2% 300V	ARCO DM15DC122G03	0002-0373
C1535	1	Cap Mica	330 pF 2% 100V	ARCO DM10DA331G03	0002-0374
C1536	1	Cap Mica	1200 pF 2% 300V	ARCO DM15DC122G03	0002-0373
C1537	1	Cap Cer	47 pF 2% NPO	M/E 2222-631-10479	0002-0053
C1538	1	Cap Mica	1800 pF 2% 500V	ARCO DM19DD182G03	0002-0363
C1539	1	Cap Cer	100 pF 2% NPO	M/E 2222-631-10101	0002-0010
C1540	1	Cap Cer	0.0015 uF 10% 50V	Centralab CW15C152 K	0002-0285
C1541	1	Cap Tant	6.8 uF 10% 35V	Sprague 196D685X9035 KA1	0032-0086
C1542	1	Cap Tant	22 uF 10% 15V	196D226X9015 HA1	0032-0007
C1543	1	Cap Tant	22 uF 10% 15V	196D226X9015 KA1	0032-0007
C1544	1	Cap Cer	0.022 uF 10% 50V	Centralab CW20C223 K	0002-0255

ITEM	QTY	DESIGNATION	ORDERING INFORMATION VALUE, SIZE, TOL	MANUFACTURER, NOTES	STOCK NO.
C1545	1	Cap Cer	0.22 uF 10% 50V	Centralab CW30C224 K	0002-0263
C1546	1	Cap Tant	6.8 uF 10% 35V	Sprague 196D865X9035 KA1	0032-0086
C1547	1	Cap Cer	4.7 pF .25pF NPO	M/E 2222-631-09478	0002-0044
C1548	1	Cap Tant	22 uF 10% 15V	Sprague 196D226X9015 KA1	0032-0007
C1549	1	Cap Tant	22 uF 10% 15V	196D226X9015 KA1	0032-0007
C1550	1	Cap Tant	22 uF 10% 15V	196D226X9015 KA1	0032-0007
C1551	1	Cap Cer	0.0047 uF 10% 50V	Centralab CW15C472 K	0002-0271
C1552	1	Cap Tant	1.0 uF 10% 35V	Sprague 196D103X9035 HA1	0032-0092
C1553	1	Cap Tant	1.0 uF 10% 35V	196D103X9035 HA1	0032-0092
C1554	1	Cap Tant	1.0 uF 10% 35V	196D103X9035 HA1	0032-0092
C1555	1	Cap Tant	100 uF 10% 20V	196D107X9020 TE4	0032-0090
U1501	1	I.C.	Quad EX-OR Gate	Motorola MC 14070 BCP	0035-0318
U1502	1	I.C.	Bi-Quinary Counter	Nat. MM 74C90 N	0035-0313
U1503	1	I.C.	Dual Decade Counter	Motorola MC 14518 B	0035-0107
U1504	1	I.C.	Dual Decade Counter	Motorola MC 14518 B	0035-0107
U1505	1	I.C.	Bi-Quinary Counter	Nat. MM 74C90 N	0035-0313
U1506	1	I.C.	Phase Lock Loop	Motorola MC 14046 CP	0035-0155
U1507	1	I.C.	Mono-Ast. Multi Vibrator	Motorola MC 14047 BE	0035-0249
U1508	1	I.C.	Quad Ex-OR Gate	Motorola MC 14070 BCP	0035-0318
U1509	1	I.C.	Dual Bi-FET Op-Amp	Nat LF 353 N	0035-0303
U1510	1	I.C.	Dual Bi-FET Op-Amp	Nat. LF 353 N	0035-0303
U1511	1	I.C.	Progr. Div. N-Count	Motorola MC 14522 B	0035-0322
U1512	1	I.C.	Progr. Div.N-Count	Motorola MC 14522 B	0035-0322
U1513	1	I.C.	Progr. Div.N-Count	Motorola MC 14522 B	0035-0322

ITEM	QTY	DESIGNATION	ORDERING INFORMATION VALUE, SIZE, TOL	MANUFACTURER, NOTES	STOCK NO.	
U1514	1	I.C.	Dual Progr.Div.N-Count	Motorola MC 14569 B	0035-0323	
U1515	1	I.C.	Preset U-D Counter	Motorola MC 14510 BCP	0035-0278	
U1516	1	I.C.	Preset U-D Counter	Motorola MC 14510 BCP	0035-0278	
U1517	1	I.C.	Preset U-D Counter	Motorola MC 14510 BCP	0035-0278	
U1518	1	I.C.	Preset U-D Counter	Motorola MC 14510 BCP	0035-0278	
U1519	1	I.C.	Preset U-D Counter	Motorola MC 14510 BCP	0035-0278	
U1520	1	I.C.	Dual Bi-FET Op-Amp 8 pin	Nat. LF 353 N	0035-0303	
U1521	1	I.C.	Triple SPDT AnalSw	Motorola MC 14053 BCP	0035-0324	
U1522	1	I.C.	Triple 3-Inp NAND	Motorola MC 14023 BCP	0035-0183	
U1523	1	I.C.	Quad 2-Inp NOR	Motorola MC 14001 BCP	0035-0189	
U1524	1	I.C.	Quad 2-Inp NAND	Motorola MC 14011 BCP	0035-0186	
U1525	1	I.C.	Dual D F-F	Motorola MC 14013 BCP	0035-0182	
U1526	1	I.C.	Bi-FET Op-Amp	Nat. LF 356 N	0035-0325	
U1527	1	I.C.	Dual Bi-FET Op-Amp	Nat. LF 353 N	0035-0303	
U1528	1	I.C.	Dual Bi-FET Op-Amp	Nat. LF 353 N	0035-0303	
U1529	1	I.C.	Dual Decade Counter	Motorola MC 14518 BCP	0035-0107	
CR1501	1	Diode	Switching 1N 4448	Jedec	0037-0001	
CR1502	1	Diode	Switching 1N 4448	Jedec	0037-0001	
CR1503	1	Diode	Switching 1N 4448	Jedec	0037-0001	
CR1504	1	Diode	Switching 1N 4448	Jedec	0037-0001	
CR1505	1	Diode	Switching 1N 4448	Jedec	0037-0001	
VR1501		Zener Diode	1N 5226 B		0037-0152	
VR1502		Zener Diode	1N 5226 B		0037-0152	

ITEM	QTY	DESIGNATION	ORDERING INFORMATION VALUE, SIZE, TOL	MANUFACTURER, NOTES	STOCK NO.	
Q1501	1	Transistor	2N 2222 NPN	Jedec	0010-0010	
Q1502	1	Transistor	2N 3251 PNP	Motorola	0010-0006	
Q1503	1	Transistor	2N 2222 NPN	Jedec	0010-0010	
Y1501	1	Crystal	1 MHz	WGI 9202-9701	9202-9701	
1	1	P.C. Board	Synthes. drilled	WGI 9202-7005-02		
2	2	Handle	P.C. Board gy	WGR 0000-3705.55/4	0028-0112	
3	4	Rivet	f. Handle	WGR 5 WN 33/3/0	0005-0021	
TP 1-TP 7	7	Rivet	Testpoint	WGR 3000.19/5	0003-0274	
4	1	Socket Terminal Carrier		Augat 716 AG 2D	0034-0025	1)
5	2	Terminal	Solder	WGR 0000-2901.02/4	0027-0033	
6	1	Label	Signal Triangle	WGR 0000-7575.994	0021-0029	

1) As reqired per Board.

ITEM	QTY	DESIGNATION	ORDERING INFORMATION VALUE, SIZE, TOL	MANUFACTURER, NOTES	STOCK NO.
R1601	1	Var.Resist	Dual Pot (Level)	Alen-Bradley LKKC 99328	0038-0139
R1602	1	Var.Resist	Pot w/Switch (Spkr)	CTS Type TV-082-T450	0038-0140
R1603	1	Resistor	CF 5.6 5% ¼W	Amp. CR-25	0008-0375
R1604	1	Resistor	CF 2.2 k 5% ¼W	Amp. CR-25	0008-0216
R1605	1	Resistor	CF 8.2 k 5% ¼W	Amp. CR-25	0008-0014
C1601	1	Cap Cer	33 pF 2% NPO	M/E 2222-631-10339	0002-0052
U1601	1	I.C.	Freq. Counter	Intersil ICM 7224 IPL	0035-0332
DS1601	1	Display	L.C.D. (Level)	Hamlin 3909-366-06-0	0037-0202
DS1604	1	Display	L.C.D. (Freq.)	Hamlin 3909-366-06-0	0037-0202
DS1605	1	L.E.D.	green T-1	HP HLMP-1501	0037-0014
J1601	1	Connector	26 pin Male	3M 3429-2202	0003-0332
W1601	1	Cable Assy w/Connector both Ends		AP 922621-40-04-6½	0001-0114
	1	Switch	Slide 6u Au	WGR 2 WN 13/4/2	0011-0068

ITEM	QTY	DESIGNATION	ORDERING INFORMATION VALUE, SIZE, TOL	MANUFACTURER, NOTES	STOCK NO.
1	1	P.C. Board	Display, drilled	WGI 9202-7006-02	
2					
3	4	Socket Strip	I.C., 20 pin	Augat 325-AG1D-20	0034-0028
4	1	Socket	DIP 40 pin	Augat 540-AG 37D	0034-0027
5					
6					
7					
8	1	Tubing	clear, heatshrink	Alpha FIT 221 3/16"	0031-0015
9					
10					
11					
12					
B1601	1	Motor Assy	premounted	WGR 829-7036.818/4	
14	1	Flywheel	for "	WGR 829-7036.067/5	
15	1	Washer	for Tachometer	WGI 9202-0100-08/A	
16	3	Screw	M 2x5mm Cyl Sl	DIN 84	0005-0239
17	1	Set Screw	M 2.5x3mm	DIN 916	0005-0355
18					
19					
20	2	Ty-Rap	(Optional)		
21	1	Label	Signal Triangle	WGR 0000-7575.994	0021-0029
22		Hook-up Wire	AWG 22, Brn, Wht, Yel, Bl, Blk ≈ 12 " each		
23	2	Receptacle		Germ Amp 925-574-3	0003-0251
24	2	Sleeve	f. Recept.	WGR 0000-3706.22/4	0028-0028
25					

ITEM	QTY	DESIGNATION	ORDERING INFORMATION VALUE, SIZE, TOL	MANUFACTURER, NOTES	STOCK NO.
R1701	1	Resistor	68 ohm 1% 10W	Clarostat VC 10 F	0008-0648
R1702	1	Resistor	68 ohm 1% 10W	Clarostat VC 10 F	0008-0648
R1703	1	Resistor	CF 430 5% ¼W	Amp. CR-25	0008-0343
R1704	1	Resistor	CF 22 5% ¼W	Amp. CR-25	0008-0234
R1705	1	Resistor	CF 10 k 5% ¼W	Amp. CR-25	0008-0185
R1706	1	Resistor	CF 10 5% ¼W	Amp. CR-25	0008-0201
R1707	1	Resistor	CF 910 5% ¼W	Amp. CR-25	0008-0011
C1701	1	Cap Al-Elyt	3300 uF 20% 35V	ELNA 35RPE 3300	0032-0110
C1702	1	Cap Al-Elyt	3300 uF 20% 35V	ELNA 35RPE 3300	0032-0110
C1703	1	Cap Cer	0.22 uF 10% 50V	Centralab CW30C224 K	0002-0263
C1704	1	Cap Cer	0.22 uF 10% 50V	Centralab CW30C 224 K	0002-0263
C1705	1	Cap Tant	1.0 uF 10% 35V	Sprague 196D105X9035 HA1	0032-0092
C1706	1	Cap Tant	1.0 uF 10% 35V	196D105X9035 HA1	0032-0092
C1707	1	Cap Cer	0.0082 uF 10% 50V	Centralab CW15C822 K	0002-0282
C1708	1	Cap Cer	0.1 uF 10% 50V	Centralab CW30C104 K	0002-0029
C1709	1	Cap Tant	22 uF 10% 15V	Sprague 196D226X9015 KA1	0032-0007
C1710	1	Cap Cer	0.1 uF 10% 50V	Centralab CW30104 K	0002-0029
C1711	1	Cap Tant	100 uF 10% 20V	Sprague 196D107X9020 TE4	0032-0090

ITEM	QTY	DESIGNATION	ORDERING INFORMATION VALUE, SIZE, TOL	MANUFACTURER, NOTES	STOCK NO.
CR1701	1	Diode	Rectifier 1N 4002	Jedec	0037-0020
CR1702	1	Diode	Rectifier 1N 4002	Jedec	0037-0020
CR1703	1	Diode	Rectifier 1N 4002	Jedec	0037-0020
CR1704	1	Diode	Rectifier 1N 4002	Jedec	0037-0020
CR1705	1	Diode	Rectifier 1N 4002	Jedec	0037-0020
CR1706	1	Diode	Rectifier 1N 4002	Jedec	0037-0020
CR1707	1	Diode	Rectifier 1N 4002	Jedec	0037-0020
CR1708	1	Diode	Rectifier 1N 4002	Jedec	0037-0020
CR1709	1	Diode	Hot-Carrier 1N 5818	Motorola	0037-0203
CR1710	1	Diode	Hot-Carrier 1N 5818	Motorola	0037-0203
VR1701	1	Zener Diode	16 Volt 1N 5353	Motorola	0037-0204
VR1702	1	Zener Diode	16 Volt 1N 5353	Motorola	0037-0204
VR1703	1	Zener Diode	5.1 V 5% 1N 5231 B	Motorola	0037-0059
U1701	1	I.C.	15V Pos. Regulator	Motorola MC 7815 CP	0035-0002
U1702	1	I.C.	15V Neg.Regulator	Motorola MC 7915 CP	0035-0003
U1703	1	I.C.	Audio Amp	Nat. LM 386 N-1	0035-0326
		Hook-up Wire	AWG 22, Stranded Purple, Yel, Wht/Org, Blk, Wht, Org. ≈ 12" each		

ITEM	QTY	DESIGNATION	ORDERING INFORMATION VALUE, SIZE, TOL	MANUFACTURER, NOTES	STOCK NO.
J1701	1	Connector	3 Pin Male	Panduit HLSS156-3-C	0003-0333
J1702	1	Connector	6 Pin Male	Panduit HLSS156-6-C	0003-0334
J1703	1	Connector	2 Pin Male	Panduit HLSS156-2-C	0003-0335
P1701	1	2 parts Connector	6 Pin 6 Pin Cap	Panduit CE156 F22-6-C Panduit EC156 F-6-C	0003-0336
P1702	1	2 parts Connector	3 Pin 3 Pin Cap	Panduit CE156 F22-3-C Panduit EC156 F-3-C	0003-0338
P1703	1	2 parts Connector	2 Pin 2 Pin Cap	Panduit CE156 F22-2-C Panduit EC156 F-2-C	0003-0339
T1701	1	Transformer	Power,	Abbott 6B20-30B	0012-0009
		Hook-up Wire	AWG 22; Stranded,	Org, Gn, Yel,	
		Hook-up Wire	AWG 22; Stranded,	Yel, Wht, Wht/Org,	
		Tubing	Heatshrink Blk	FIT 105 3/32"	
FL1701	1	Filter	Line,	Corcom 6J4	0015-0018
	2	Mtg. Clip	Filter	Corcom 45-1676	0023-0033
		Hook-up Wire	AWG 22, Solid Tinned		
		Tubing	(sleeve) clear Teflon	1/16"	
	1	Fuse	120V/0.25 A Slo-Blo	Littlefuse 3 AG 313.250	0004-0049
	1	Fuse	220V/0.125 A Slo-Blo	Littlefuse 3 AG 313.125	0004-0061

ITEM	QTY	DESIGNATION	ORDERING INFORMATION VALUE, SIZE, TOL	MANUFACTURER, NOTES	STOCK NO.
15	1	Speaker	8 ohm, 0.25 W	Panasonic EAS-6 POITBT	0015-0097
		Hook-up Wire	AWG 22; Stranded,	Wht, Br,	
		Tubing	Heatshrink	FIT 105 1/8"	
	1	Panel,	Rear, machined	Ref: 9202-0300-01/D	
1	1	P.C. Board	P.S. / A.A. drilled	WGI 9202-7007-02	
2	1	Screw	M 3x5mm Cyl CrSl	ZLK 1875 A	0005-0200
3	4	Spacer	Rivet-on #3 8.5mm	WGR 0000-3011.06/5	0024-0029
4	2	Heatsink	P.B. Bd mount	Thermalloy 6030-BTT	0014-0075
5	2	Washer	Teflon, shoulder	Motorola B5147F015	0028-0154
6	2	Washer	Thermal	Chomerics 60-11-5791-1674	0028-0151
7	1	Solder Lug	# 6		0027-0003
8	2	Washer	Flat M 3		0005-0274
9	2	Screw	M 3x8mm Cyl Sl	DIN 84	0005-0138
10	2	Nut	M 3 Hex		0005-0196
11	2	Washer	Lock # 4	Shakeproof	0005-0028
12					
13					
14	1	Grommet	blk, ½"ID, 9/16"OD	Waldom G 403	0028-0145

ITEM	QTY	DESIGNATION	ORDERING INFORMATION VALUE, SIZE, TOL	MANUFACTURER, NOTES	STOCK NO.	
J1801	1	Connector	44 pin	TEKA TPI-221-S04	0003-0337	
J1802	1	Connector	44 pin	TEKA TPI-221-S04	0003-0337	
J1803	1	Connector	44 pin	TEKA TPI-221-S04	0003-0337	
J1804	1	Connector	44 pin	TEKA TPI-221-S04	0003-0337	
J1805	1	Connector	44 pin	TEKA TPI-221-S04	0003-0337	
J1806	1	Connector	6 pin Male	Panduit HLSS156-6-C	0003-0334	
R1801	1	Resistor	CF 4.7 k 5% ¼W	Amp. CR-25	0008-0182	
S1801	1					
S1802	1	Switch Assembly 4 S		WGI 9202-8003-00/B		
S1803	1					
S1804	1					
W1801	1	Cable Assy w/Connector both Ends		AP 922522-26-02-4	0001-0115	
1	1	P.C. Board	Mother, drilled	WGI 9202-7008-02		
2						
3						
-						
5						
6	10	Screw	M 3x10mm Cyl CrSl	ZLK 1875 A	0005-0212	
7	10	Cinch Nut	M 3 B	WN 32/3/1	0005-0307	
8	10	Washer	Flat M 3		0005-0274	
9	2	Spacer	f. Switch	WGI 9202-0100-07/A		
10						

SERIES A...	
9202-7618	PAGE 1 OF 1