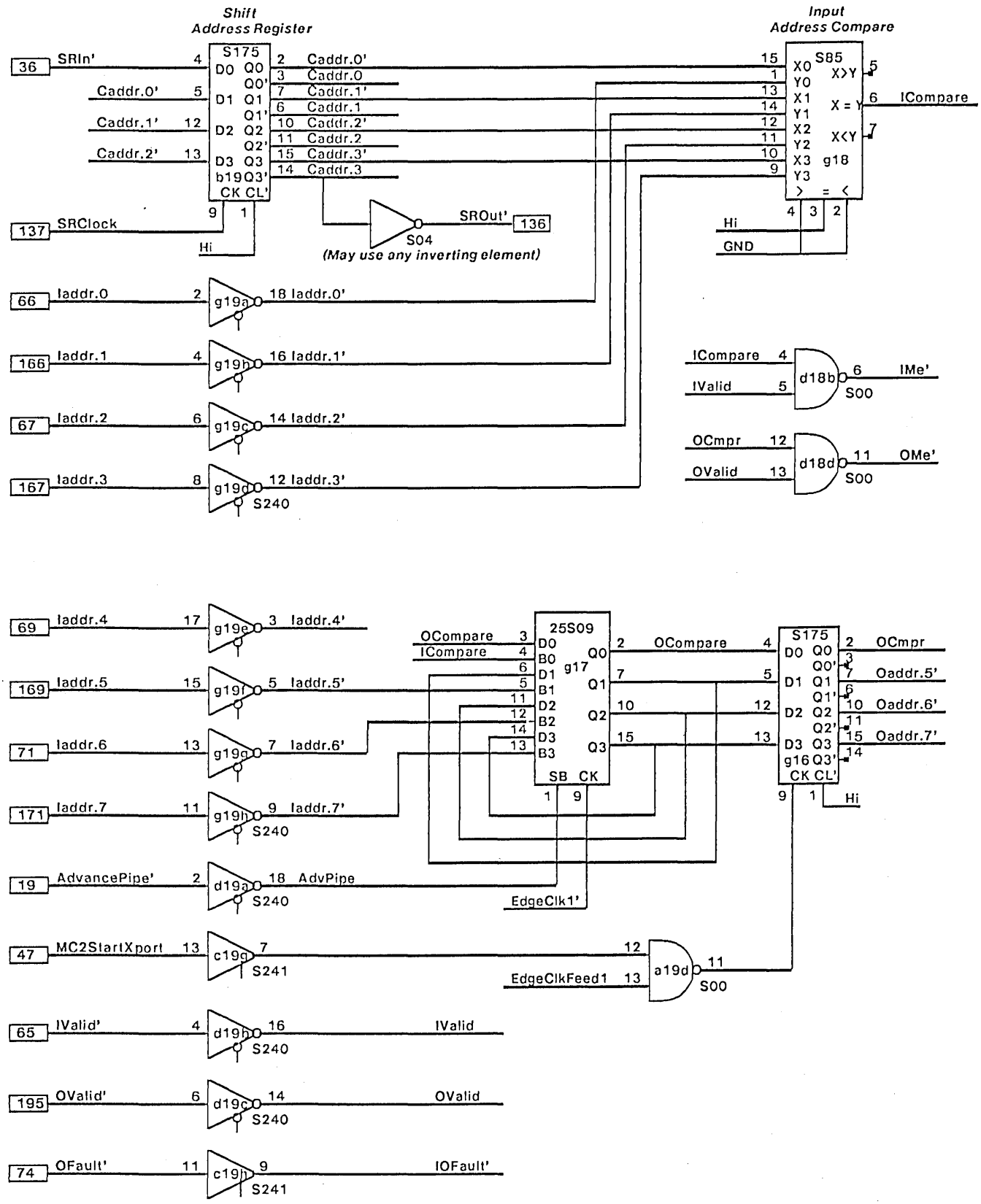

XEROX EOD	Project DO	IO INTERFACE Address	File D0IO01.sil	Designer DPPStaff	Rev S	Date 05/10/78	Page 1

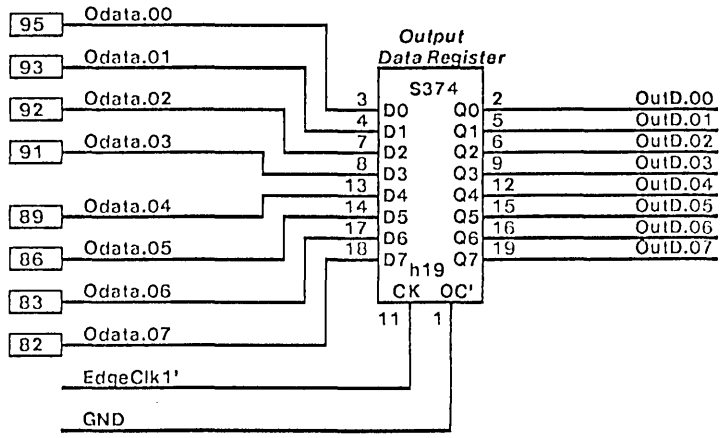

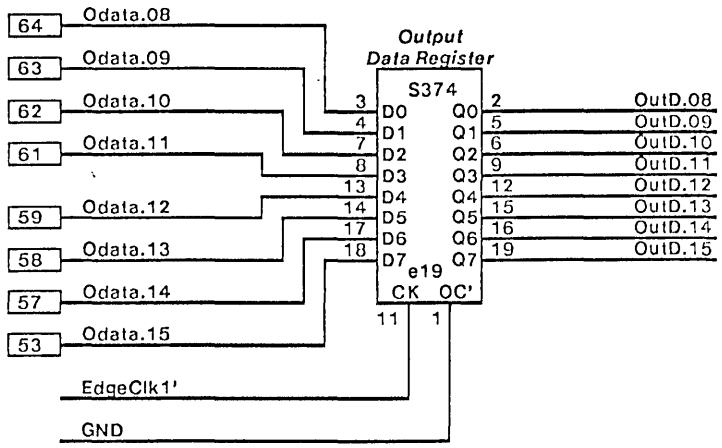

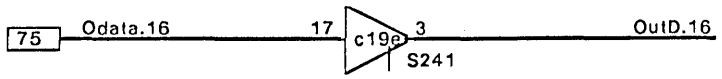

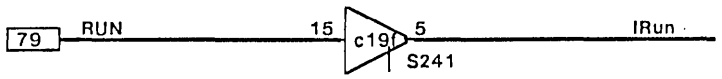

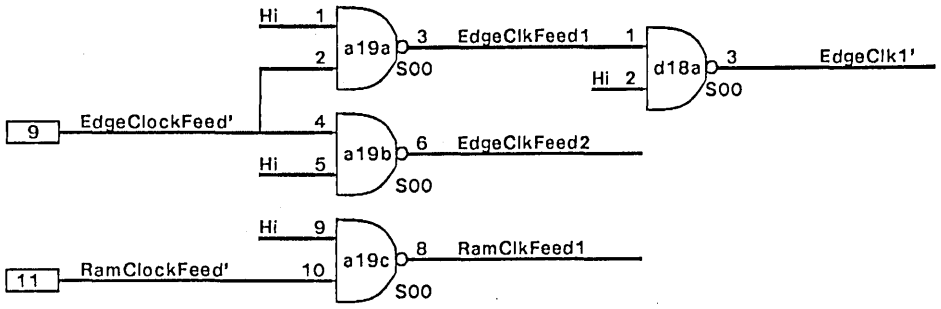

XEROX EOD	Project DO	IO INTERFACE OData/Clocks	File D0IO02.sil	Designer DPPStaff	Rev B	Date 05/10/78	Page 2

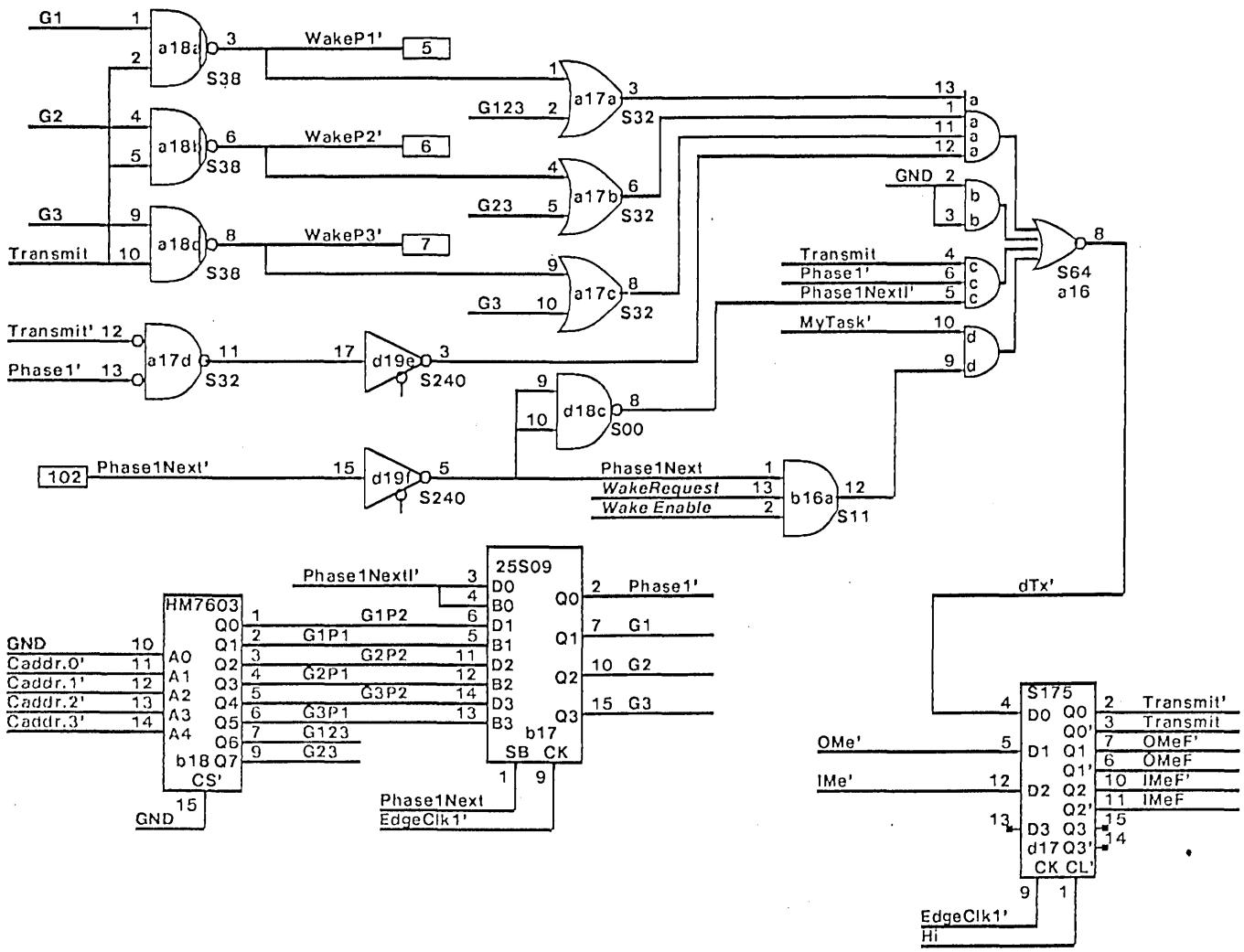

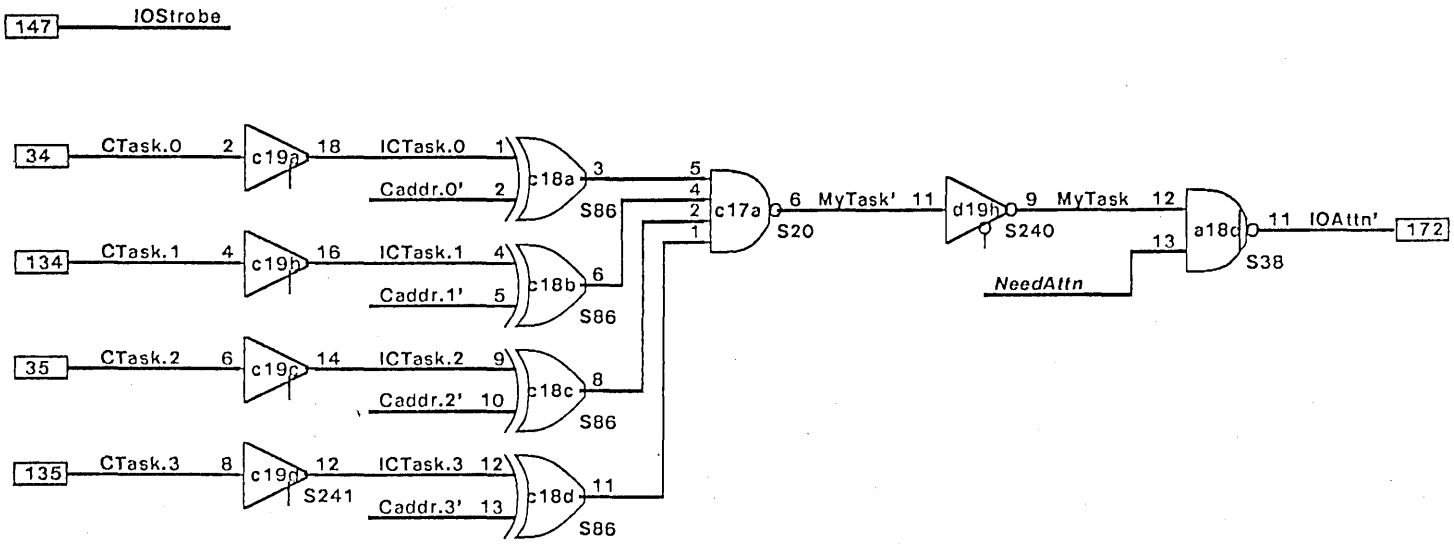

XEROX EOD	Project D0	IO INTERFACE WakeUp/CTask	File D0IO03.sil	Designer DPPStaff	Rev B	Date 05/10/78	Page 3