Assuming very high conductivity at section i, one obtains

$$\frac{B_1^2 u_i}{\mu} = \rho_1 u_1 \left(\frac{u_2^2}{2} - \frac{u_i^2}{2}\right) - \rho_1 u_1 (c_p T_i - c_p T_2) \quad (14)$$

From Eq. (13) it follows that, because at section 2 $B_2 = 0$ conductivity, σ_2 must be also zero (low temperature). Therefore one can neglect $c_p T_2$ and p_2.

From Eq. (14) and conservation of mass ($\rho_1 u_1 = \rho_i u_i$), one obtains

$$(u_2^2/2) - (u_i^2/2) - c_p T_i = 2u_i(u_2 - u_i) - 2(p_i/\rho_i)$$

or

$$[(p_i/\rho_i) = (c_p - c_v)T_i]$$

$$(u_2^2/2) - 2u_i u_2 + \tfrac{3}{2} u_i^2 - (2c_v - c_p)T_i = 0$$

therefore

$$u_2 = 2u_i \pm [u_i^2 + 2(2c_v - c_p)T_i]^{1/2}$$
$$= u_i\left[2 \pm \left(1 + \frac{2(2-\gamma)}{\gamma(\gamma-1)}\right)^{1/2}\right] \quad (15)$$

For $\gamma = \frac{5}{3}$ ($u_2 > u_i$), $u_2 = 3.27\ u_i$. For hydrogen $T_i = 15000°K$, $u_i \cong 15000$ m/sec. Therefore, $u_2 = 4.9 \times 10^6$ cm/sec. The order of magnitude of this velocity is in agreement with experimentally observed values.

Calculation of mass flow

From the momentum equation applied to sections 1 and i (Fig. 4), it follows that

$$p_1 + \rho_1 u_1^2 = p_i + \rho_i u_i^2$$

or

$$\frac{p_1}{\rho_1 u_1} + u_1 = \frac{p_i}{\rho_i u_i} + u_i$$

Taking into account that

$$(p/\rho) = RT \text{ and } u_i = (\gamma R T_i)^{1/2}$$

one obtains

$$\frac{R_1 T_1}{u_1} + u_1 = \left(\frac{R_i T_i}{\gamma}\right)^{1/2} + (\gamma R_i T_i)^{1/2} = \frac{\gamma+1}{\gamma}(\gamma R_i T_i)^{1/2}$$

or

$$u_1 = \frac{1}{2}\left[\frac{\gamma+1}{\gamma}[\gamma R_i T_i]^{1/2} \pm \left(\frac{(\gamma+1)^{1/2}}{\gamma} R_i T_i - 4R_1 T_1\right)^{1/2}\right] \quad (16)$$

Taking into account that $R_1 T_1 \ll R_i T_i$, $u_1 < u_i$, and assuming that $R_1 = R_i$, one can develop expression (16) obtaining

$$u_1 \cong \frac{R_1 T_1 \gamma^{1/2}}{(\gamma+1) R_i T_i}$$

or

$$\rho_1 u_1 = \frac{p_1 \gamma^{12}}{(\gamma+1)(R_i T_i)^{1/2}} \quad (17)$$

u_1 is the velocity of the gas in the system of coordinates connected with the sheet $u_1 = v_1 - U$. If the gas velocity is slightly different than u_1 ($v_1 \neq u_1$), the sheet must move with the velocity $U = v_1 - u_1$; for $v_1 < u_1$, the sheet moves toward insulator $U < 0$; and for $v_1 > u_1$, the sheet moves toward the exit $U > 0$.

In this simplified model of stationary current sheet, the ionization current has been neglected. However, ionization current can be quite important, and the detailed analysis of the structure of the discharge layer is necessary for better understanding the acceleration process.

There is, of course, the possibility of utilizing the principle of "deflagration" type of current layer in a pulsed gas device.‡ Such a system will combine the advantage of the gasdynamic cycle of an arcjet with the mean low-power requirement of a pulse device. Moreover, the nonsteady flow enables one to obtain higher mass flow [$V_{max} = 2a_0/(\gamma - 1)$, where a_0 is the reservoir sound speed] than that of steady flow {where $V_{max} = [2/(\gamma - 1)^{1/2} a_0]$}.

Conclusions

1) The current layer sweeping up the gas leads to significant losses.

2) The velocity distribution characteristic for an expanding layer leads to smaller losses.

3) Deflagration type of stationary discharge layer is in principle very efficient and can provide high specific impulse.

References

[1] Samaras, D. G., *Applications of Ion Flow Dynamics* (Prentice-Hall, Inc., Englewood Cliffs, N. J., 1962), p. 417.

[2] Stuhlinger, E., "Electric propulsion," Astronautics and Aeronautics **1**, 26 (1964).

[3] Rosciszewski, J., "Preliminary study of the ionizing front in a plasma gun," General Dynamics/Astronautics, Space Science Lab. Rept. BBI-63-003 (March 1963).

[4] Goldstein, S., *Lectures on Fluid Mechanics* (Interscience Publishers, Inc., New York, 1960), p. 59.

‡ Recently Gooding and Ashley of General Dynamics/Astronautics obtained experimentally such a stationary layer in a pulse device.

Thermorheologically Simple Viscoelastic Materials

M. Shinozuka*
Columbia University, New York, N. Y.

WITHIN the framework of linear theory, the thermal stress analysis of homogeneous, isotropic, thermorheologically simple viscoelastic materials has been developed by Morland and Lee[1] and Muki and Sternberg.[2] This analysis is based on the temperature-time equivalence hypothesis with reference to the relaxation modulus

$$G_{T_1}(t) = G_{T_0}[\varphi(T_1)t] \quad (1)$$

where t denotes the time, $G_T(t)$ the relaxation modulus of the material at temperature T, T_0 the base temperature, and $\varphi(T_1)$ is the shift factor at $T = T_1$. The shift factor satisfies $\varphi(T) > 0$, $\varphi(T_0) = 1$, and $d\varphi(T)/dT > 0$.

The purpose of this note is to show explicitly how the temperature-time equivalence hypothesis can be formulated in terms of the temperature dependence of the relaxation spectrum of the material, since relaxation spectra among the various viscoelastic functions are most closely related to the molecular processes occurring in the material, and since hypothesis stated with respect to spectra is expected to indicate more clearly the validity and limitations of stress-strain relations of thermorheologically simple materials.

Under zero initial conditions and uniform temperature T, the deviatoric stress-strain relations are

$$s_{ij}(x,t) = \int_0^t G_T(t-t')\dot{e}_{ij}(x,t')dt' \text{ or } e_{ij}(x,t) = \int_0^t J_T(t-t')\dot{s}_{ij}(x,t')dt' \quad (2)$$

Received September 2, 1964. This work was supported by the Office of Naval Research under contract Nonr 266(78).

* Assistant Professor of Civil Engineering.

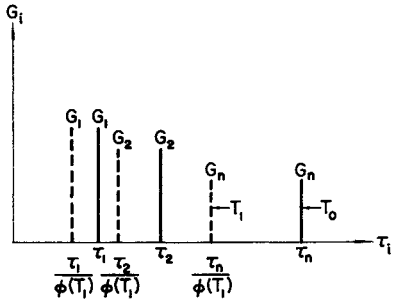

Fig. 1 Assumed change in discrete relaxation spectrum.

where dots indicate partial derivative with respect to time, and $s_{ij}(x,t)$ and $e_{ij}(x,t)$ are the components of deviatoric stress and strain tensor. x stands for the rectangular coordinates (x_1, x_2, x_3) of the material point under discussion. $J_T(t)$ is the creep compliance of the material at temperature T.

It can be shown from Eq. (1) and the relation between $G(t)$ and $J(t)$ that

$$J_{T_1}(t) = J_0[\varphi(T_1)t] \tag{3}$$

Hence, if the reduced time is defined as

$$\xi = \varphi(T)t \tag{4}$$

the stress-strain laws at $T = T_1$ can be written in terms of the relaxation modulus and the creep compliance at $T = T_0$:

$$s_{ij}(x,t) = \int_0^t G_{T_0}(\xi - \xi')\dot{e}_{ij}(x,t')dt' \text{ or } e_{ij}(x,t) = \int_0^t J_{T_0}(\xi - \xi')\dot{s}_{ij}(x,t')dt' \tag{5}$$

where $\xi' = \varphi(T_1)t'$.

Morland and Lee[1] showed that Eq. (5) is also valid where the temperature is a function of space and time: $T = T(x,t)$. In this case, however, the definition of the reduced time should be modified to

$$\xi = \xi(x,t) = \int_0^t \varphi[T(x,\lambda)]d\lambda \tag{6}$$

and $\xi' = \xi(x,t')$. The foregoing results are based, without reference to relaxation spectra, on the temperature-time equivalence Eq. (1).

At this point, let hypothesis I be introduced as follows:

Hypothesis I: If the material has a relaxation spectrum $g_{T_0}(t)$ at the base temperature T_0, then the spectrum at temperature T is

$$\varphi(T)g_{T_0}[\varphi(T)\tau]$$

where

$$\int_0^\infty g_{T_0}(\tau)d\tau = G$$

is the unrelaxed shear modulus of the material.

Formally, a discrete relaxation spectrum can be included in $g_{T_0}(\tau)$ with the aid of Dirc's δ function. For example, a

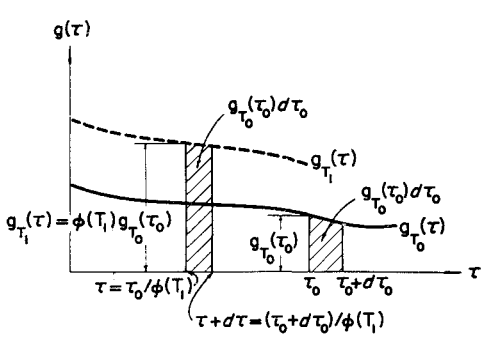

Fig. 2 Assumed change in continuous relaxation spectrum.

spectrum shown by solid lines in Fig. 1 can be written as

$$g_{T_0}(\tau) = \sum_{i=1}^n G_i\delta(\tau - \tau_i) \tag{7}$$

where

$$\sum_{i=1}^n G_i = G$$

is the unrelaxed shear modulus of the material.

When one deals with a material that does not relax completely at a constant strain, such as cross-linked polymers, the relaxed shear modulus G_n should be introduced into $g_{T_0}(\tau)$ as follows:

$$g_{T_0}(\tau) = g_{T_0}'(\tau) + \lim_{\tau_n \to \infty} G_n\delta(t - \tau_n) \tag{8}$$

where

$$\int_0^\infty g'_{T_0}(\tau)d\tau + G_n = G$$

Hypothesis I implies that, if the material has a discrete relaxation spectrum (G_i,τ_i) at $T = T_0$, the spectrum at $T = T_1$ is $[G_i,\tau_i/\varphi(T_1)]$ (Fig. 1). This can be shown as follows:

$$g_{T_1}(\tau) = \varphi(T_1)g_{T_0}[\varphi(T_1)\tau] = \varphi(T_1)\sum_{i=1}^n G_i\delta[\varphi(T_1)\tau - \tau_i] = \varphi(T_1)\sum_{i=1}^n G_i\delta[\varphi(T_1)\{\tau - \tau_i/\varphi(T_1)\}] \tag{9}$$

$$\varphi(T_1)G_i\int_0^\infty \delta[\varphi(T_1)\tau - \tau_i]d\tau = G_i\int_0^\infty \delta(\tau - \tau_i)d\tau = G_i \tag{10}$$

Equation (9) indicates that the relaxation times τ_i are shifted to $\tau_i/\varphi(T_1)$ because of the temperature change from T_0 to T_1, whereas Eq. (10) shows that the spring constants G_i are invariant under temperature change.

If the material has a continuous spectrum $g_{T_0}(\tau)$ at $T = T_0$, the hypothesis implies that internal relaxation processes with relaxation times between τ_0 and $\tau_0 + d\tau_0$ at $T = T_0$ will be replaced by a process with relaxation times between $\tau_0/\varphi(T_1)$ and $(\tau_0 + d\tau_0)/\varphi(T_1)$ at $T = T_1$, while the spring constant is invariant since, according to the hypothesis, $g_{T_1}(\tau)d\tau = \varphi(T_1) \times g_{T_0}[\varphi(T_1)\tau]d\tau$, with $\tau = \tau_0/\varphi(T_1)$, reduces to $g_{T_0}(\tau_0)d\tau_0$ Fig. 2.

From the foregoing discussion, it is easy to show that the logarithmic relaxation spectrum $H_T(\ln\tau) = \tau g_T(\tau)$, often used in polymer research, transforms as a result of temperature change from T_0 to T_1 as follows:

$$H_{T_1}(\ln\tau) = H_{T_0}[\ln\{\varphi(T_1)\tau\}] \tag{11}$$

Essentially, Eq. (11) was stated by Ferry[3] on the basis of molecular theory. In what follows, it is shown that hypothesis I produces Eqs. (1–6). The relaxation modulus for the base temperature can be expressed in terms of the spectrum as follows:

$$G_{T_0}(t) = \int_0^\infty g_{T_0}(\tau)e^{-t/\tau}d\tau \tag{12}$$

According to hypothesis I,

$$G_{T_1}(t) = \int_0^\infty g_{T_1}(\tau)e^{-t/\tau}d\tau = \int_0^\infty \varphi(T_1)g_{T_0}[\varphi(T_1)\tau]e^{-t/\tau}d\tau = \int_0^\infty g_{T_0}(\tau)e^{-\varphi(T_1)t/\tau}d\tau = G_{T_0}[\varphi(T_1)t] \tag{13}$$

Thus, the temperature-time equivalence principle has been derived from hypothesis I. Therefore, Eq. (3), as well as Eq. (5), with the reduced time given in Eq. (4), follow immediately.

If the material is stress free under uniform temperature T_0 at $t = 0$ $[T_0 = T(x,0)]$ with a discrete relaxation spectrum

$$g_{T_0}(\tau) = \sum_{i=1}^{n} G_i(\tau - \tau_i)$$

the strain $e_{ij}(x,t)$ and stress $s_{ij}^{(i)}(x,t)$ associated with the elastic spring G_i are, with the aid of hypothesis I, related by

$$\dot{e}_{ij}(x,t) = \frac{1}{2G_i}\left[s_{ij}^{(i)}(x,t) + \frac{\varphi[T(x,t)]}{\tau_i} s_{ij}^{(i)}(x,t)\right] \quad (14)$$

Equation (14) can be solved for $s_{ij}^{(i)}(x,t)$:

$$s_{ij}^{(i)}(x,t) = 2G_i \int_0^t \dot{e}_{ij}(x,t') \exp\left\{-\int_{t'}^t \varphi[T(x,\lambda)]d\lambda/\tau_i\right\}dt' \quad (15)$$

Hence, with the reduced time ξ of the form of Eq. (6),

$$\begin{aligned} s_{ij}(x,t) &= \sum_{i=1}^{n} s_{ij}^{(i)}(x,t) \\ &= \int_0^t \dot{e}_{ij}(x,t') \sum_{i=1}^{n} 2G_i \exp\{-(\xi - \xi')/\tau_i\}\, dt' \quad (16) \\ &= \int_0^t G_{T_0}(\xi - \xi')\dot{e}_{ij}(x,t')dt' \end{aligned}$$

When the material has a continuous relaxation spectrum $g_{T_0}(\tau)$ initially, the stress-strain relations, with the aid of hypothesis I, are

$$\dot{e}_{ij}(x,t) = \frac{1}{2g_{T_0}(\tau_0)d\tau_0}\left[\frac{\partial s_{ij}(x,t;\tau_0)}{\partial \tau_0}\partial\tau_0 + \frac{\varphi[T(x,t)]\partial s_{ij}(x,t;\tau_0)}{\tau_0 \quad \partial\tau_0} d\tau_0\right] \quad (17)$$

where

$$[\partial s_{ij}(x,t;\tau_0)/\partial\tau_0]d\tau_0$$

is the stress associated with the molecules with relaxation times between τ_0 and $\tau_0 + d\tau_0$ at $T = T(x,0) = T_0$ and an invariant spring constant $g_{T_0}(\tau_0)d\tau_0$. From Eq. (17),

$$\frac{\partial s_{ij}(x,t,\tau_0)}{\partial\tau_0} d\tau_0 = 2g_{T_0}(\tau_0)\int_0^t \dot{e}_{ij}(x,t) \exp\left\{-\int_{t'}^t \varphi[T(x,\lambda)]d\lambda/\tau_0\right\} dt'$$

Hence, intergrating over τ_0,

$$\begin{aligned} s_{ij}(x,t) &= \int_0^t \dot{e}_{ij}(x,t) \times \int_0^\infty 2g_{T_0}(\tau_0) \exp\{-(\xi - \xi')\tau_0\}\, d\tau_0 d\tau' \quad (18) \\ &= \int_0^t G_{T_0}(\xi - \xi')\dot{e}_{ij}(x,t')dt' \end{aligned}$$

Equations (16) and (18) are identical with Eq. (5) with the reduced time given in Eq. (6). Hence, Eq. (5) with Eq. (6) has been derived directly from hypothesis I.

When the material is viscoelastic in dilatational deformation, the temperature-time equivalence with respect to the bulk relaxation modulus $K(t)$ can be shown to be similar to a hypothesis equivalent to hypothesis I for the relaxation spectrum associated with $K(t)$.

References

[1] Morland, L. W. and Lee, E. H., "Stress analysis for linear viscoelastic materials with temperature variation," Trans. Soc. Rheol. **4**, 233 (1960).

[2] Muki, R. and Sternberg, E., "On transient thermal stresses in viscoelastic materials with temperature-dependent properties," J. Appl. Mech. **28**, 193 (1961).

[3] Ferry, J. D., *Viscoelastic Properties of Polymers* (John Wiley and Sons, Inc., New York, 1961), pp. 203–207.

Inertial Rotation Sensor

S. P. Heims*
Brandeis University, Waltham, Mass.

An inertial rotation sensor is a device to measure *absolute* rotations, not merely the rotation relative to an observer. If a man is in a vehicle in space, the rotation sensor fixed to the vehicle should tell him his rate and direction of rotation relative to an inertial frame of reference. In the course of theoretical studies of rotation phenomena it became apparent that various physical phenomena exist which, in principle, could provide mechanisms for inertial rotation-sensing devices, mechanisms that are quite different from those that have been employed in the past. The purpose of this note is to point out one such mechanism.

Suppose a crystal is rotating relative to an inertial frame, and spectroscopic equipment is rotating along with it. The equipment measures the spectral lines of the rotating atoms as seen by an observer who is also rotating. According to a theory given elsewhere,[1] some of the characteristic atomic frequencies seen in such an experiment would differ from the corresponding frequencies in a stationary experiment by an amount proportional to, and of the order of, the rotation frequency itself. Consequently, the frequency shifts could, in principle, be used to detect rotation. In the language of quantum mechanics,[2] the magnitude of the line shift for angular velocity $\boldsymbol{\omega}$ is

$$\Delta\nu_{12} = \left\langle 1\left|\frac{\mathbf{L}\cdot\boldsymbol{\omega}}{h}\right|1\right\rangle - \left\langle 2\left|\frac{\mathbf{L}\cdot\boldsymbol{\omega}}{h}\right|2\right\rangle \quad (1)$$

where $<1|$ and $<2|$ refer to the two states of the atom connected by the line in question, and $\mathbf{L}$ is the internal orbital angular momentum operator for the atom. Since usually the unperturbed energy levels are degenerate, a degeneracy lifted by the rotation, what will actually be seen is a splitting of the line into several components with separation of the order of $\Delta\nu_{12}$. According to (1), the frequency shift occurs if the expectation value of $\mathbf{L}\cdot\boldsymbol{\omega}$ is different in states $<1|$ and $<2|$. For some atoms or ions in crystals these expectation values vanish or are very small, a phenomenon known as orbital quenching. However, in other cases, e.g., the rare earth ions in rare earth salts, these expectation values are of the order of $|\boldsymbol{\omega}|$ for the usual states of the ion.

The experimental problem anticipated is that the line splitting or shift[1] must be observed for a line that has a width much larger than $\Delta\nu_{12}$. Recent development of Masers (microwave range of frequencies) and Lasers (optical range) makes it possible to see changes in the structure or shifts in the center of mass of spectral lines of less than a cycle per second. However, the resolution depends on the shape and width of the line. So favorable conditions for observing the effect are: 1) the two states in question have very different expectation values for $\mathbf{L}\cdot\boldsymbol{\omega}$, and 2) the line is as narrow as possible. One can choose either a line in the paramagnetic resonance spectrum or in the optical spectrum, whichever gives the highest resolution. Finally, it is noted that the frequency shift[1] can be distinguished from the well-known Zeemann effect due to magnetic fields, because the latter acts on the spin as well as on the orbital angular momentum. Otherwise, the details of the rotation effect (i.e., details of the splitting, dependence on polarization, etc.) closely resemble that of the Zeemann effect.

References

[1] Heims, S. P., Physica **29**, 1430 (1963).

[2] Dirac, P. A. M., *Quantum Mechanics* (Oxford University Press, New York, 1947), 3rd ed.

Received September 14, 1964. This research was supported by NASA Grant 843-NSG-612.

* Assistant Professor, Department of Physics.