ARTICLE NO. 78-800R

J80-004

00032
20003
20010

Influence of Freestream Turbulence on Boundary-Layer Development

H. U. Meier* and H.-P. Kreplin†
Deutsche Forschungs- und Versuchsanstalt für Luft- und Raumfahrt e.V.
Aerodynamische Versuchsanstalt, Göttingen, W. Germany

The influence of the wind-tunnel turbulence on the development of a turbulent boundary was studied. The experiments were carried out in the low-turbulence wind tunnel of the DFVLR-AVA at a freestream velocity of $U_\infty = 20$ m/s. The turbulence level ($Tu_l \approx 0.06\%$) was increased up to $Tu_l \approx 1\%$ by means of various grids at different positions in the settling chamber or nozzle. For a fixed transition and constant distance from the nozzle throat, the effect of the wind-tunnel turbulence on the wall shear stress was investigated. In particular, an attempt was made to separate the effects which result from the turbulence intensity and from the turbulence structure, which is different in each wind tunnel.

Nomenclature

c_f = skin friction coefficient, $c_f = 2\tau_w/(\rho_\infty U_\infty^2)$
D = rod diameter of the grid
f = frequency
L_x = integral length scale of the freestream turbulence, Eq. (6)
M = mesh size of the grid
$R_{u'u'}$ = autocorrelation coefficient of u', Eq. (4)
T = integral time scale of the freestream turbulence, Eq. (5)
t = time
Tu_l = turbulence intensity, $Tu_l = (\overline{u'^2}/U_\infty^2)^{1/2}$
u_τ = shear stress velocity, $u_\tau = (\tau_w/\rho)^{1/2}$
U = mean velocity in x direction
u' = fluctuating velocity component in x direction
$\overline{u'^2}^{1/2}$ = rms value of fluctuating velocity component in x direction
x,y,z = coordinates normal and parallel to the surface
x_{LE} = distance from the leading edge to the measuring station
y^* = dimensionless wall distance, $y^* = yu_\tau/\nu$
Δt = time shift
δ = total boundary-layer thickness
δ_2 = momentum thickness of the boundary layer,

$$\delta_2 = \int_0^\infty \frac{U}{U_\infty}\left(1 - \frac{U}{U_\infty}\right)\mathrm{d}y$$

η = von Kármán constant, $\eta = 0.4$
μ = dynamic viscosity
ν = kinematic viscosity, $\nu = \mu/\rho$
π_1, π_2 = wake factors
ρ = density
τ = shear stress
$\phi_{u'}$ = power spectral density of u'
ω_1, ω_2 = wake functions

Subscripts

w = wall conditions
∞ = freestream conditions

Presented as Paper 78-800 at the AIAA 10th Aerodynamic Testing Conference, San Diego, Calif., April 19-21; submitted July 14, 1978; revision received June 14, 1979. Copyright © American Institute of Aeronautics and Astronautics, Inc., 1978. All rights reserved. Reprints of this article may be ordered from AIAA Special Publications, 1290 Avenue of the Americas, New York, N.Y. 10019. Order by Article No. at top of page. Member price $2.00 each, nonmember, $3.00 each. **Remittance must accompany order.**

Index categories: Testing, Flight and Ground; Boundary-Layers and Convective Heat Transfer—Turbulent; Nozzle and Channel Flow.

*Dr.-Ing., Institut für Experimentelle Strömungsmechanik. Member AIAA.
†Dr.rer.nat., Institut für Experimentelle Strömungsmechanik.

I. Introduction

THE influence of wind-tunnel turbulence on experimental results is a well-known phenomenon. It is known that significant differences may exist between the wind tunnel and free-flight tests in a quiescent airstream. This is due to the change in the transition from laminar to turbulent boundary-layer flow and the different structure of the turbulence in the boundary, which results, for example, in a change of the wall shear stress. However, the effect of grid-generated turbulence levels on the boundary layer development in the range $Tu_l = 0.06$-1%—a range which is representative for the turbulence levels in existing subsonic wind tunnels—has not been investigated experimentally. In connection with the proposal of a large European transonic wind tunnel based on the "Ludwieg Tube" concept, Bradshaw[1] discussed the question of whether the expected relatively high-turbulence intensity in this wind tunnel ($Tu_l < 1\%$) will have such a strong influence on experimental results as forecasted by Green[2] and Aihara.[3]

About 40 years ago Taylor[4] and Dryden et al.[5] found that the effects of turbulence on wind tunnel measurements cannot be satisfactorily correlated with the single property intensity. It was necessary to introduce some measure of the scales of the turbulence. Thus, Dryden applied scales in terms of correlations between the velocity fluctuations at neighboring points, as proposed by Taylor, and investigated experimentally the effects of this so-called "length-scale" on the critical Reynolds number of spheres. In his comprehensive study he found that the critical Reynolds numbers of a sphere vary not only with the turbulence intensity but also with the scale of the turbulence. In Ref. 6, a similar qualitative result was obtained, namely, that in addition to the intensity, the structure of the turbulence can influence the local shear stress. For this reason, a current investigation at the DFVLR-AVA is concerned with the effect of intensity and scale of freestream turbulence on the boundary-layer development along a flat tunnel wall.

II. Synopsis of Previous Experiments at the DFVLR-AVA

All experiments were carried out in the low-turbulence wind tunnel of the DFVLR-AVA (Fig. 1), which has a basic turbulence intensity of $Tu_l \approx 0.06\%$. The test setup is described in detail in Refs. 6 and 7. This turbulence level was increased

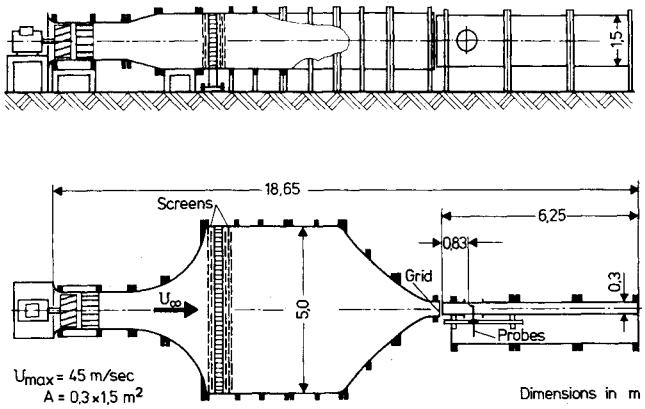

Fig. 1 Low-turbulence wind tunnel of the DFVLR-AVA.

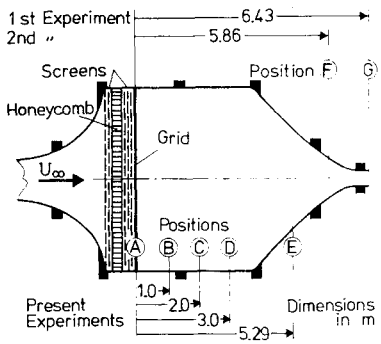

Fig. 2 Grid positions of previous and present experiments.

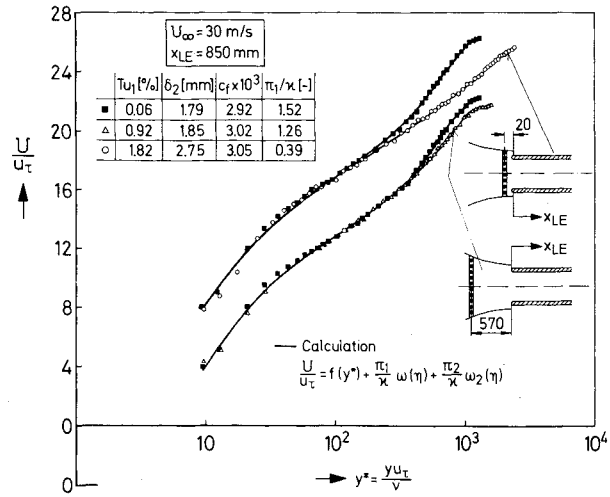

Fig. 3 Velocity profiles at different intensities Tu_l and nonuniformities in the freestream.

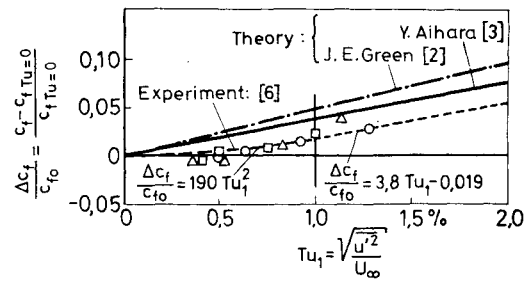

Fig. 4 Changes of the local skin friction with the freestream turbulence intensity; comparison between theory and experiment.

by means of various grids at different positions in the nozzle and settling chamber and the boundary layer at the flat wind-tunnel side wall was investigated. For all experiments, the transition from laminar to turbulent boundary-layer flow was fixed 50 mm from the leading edge of the wall.

A. High-Turbulence Intensities and Flow Nonuniformities at the Leading Edge of a Flat Nozzle Wall

In a preliminary investigation, the grids were installed at the nozzle exit, approximately 20 mm in front of the leading edge of the flat tunnel side walls (compare Fig. 2, experiment 1). This test arrangement is representative for a wind tunnel situation when a turbulence grid is installed at the nozzle exit. This is often practiced if the transition from laminar to turbulent boundary-layer flow is forced to be closer to, for example, the leading edge of an airfoil or the tip of a missile. For this purpose, the increase in freestream turbulence simulates higher Reynolds numbers. On the other hand, our first experiments indicated that for an artificially fixed transition, the grid assembly in front of the leading edge resulted in a dramatic change of the boundary-layer profiles, which were measured at different distances from the leading edge. Due to the large fluctuating velocity components and nonuniformities of the flow, which are caused by the rods of the grid, a momentum defect is introduced in the boundary layer. The experimental results, which are summarized in Ref. 7, lead to the following conclusions: High turbulence intensities at the leading edge of an airfoil, and/or artificial transition will change the boundary-layer structure. Thus, for example, the momentum loss due to a tripping wire on an airfoil can result in an increase of the displacement thickness, which itself causes a change in the pressure distribution and possibly in the separation point of the profile.

B. Response of Turbulent Boundary Layers to Small-Turbulence Levels in the External Freestream

In order to decrease the high turbulence level at the leading edge of the flat tunnel wall, the grids were installed 570 mm in front of the nozzle exit (compare Fig. 2, experiment 2). Due to the remaining contraction (1:1.38), the turbulent motion undergoes selective changes in its axial and transverse turbulent energy levels resulting from the directional and selective vortex line distortion. In Fig. 3, velocity profiles measured at a fixed distance from the leading edge ($x_{LE} = 850$ mm) on the flat tunnel wall under different local turbulence intensities and different "histories" of the turbulence and flow nonuniformities are plotted. It is indicated that the differences between the turbulence intensities measured at $x_{LE} = 850$ mm for the two different grid positions are relatively small, while the turbulence intensities at the leading edge are considerably higher. The two velocity profiles measured at artificially increased turbulence intensities are compared with velocity profiles obtained at the natural low-turbulence intensity of the tunnel ($Tu_l \approx 0.06\%$). From the results, it becomes clear that the freestream turbulence mainly affects the outer part of the boundary layer. Because the analysis of the measured profiles at low-turbulence intensities Tu_l ($0.06\% < Tu_l < 1\%$) was rather difficult, due to very small differences in the flow quantities, the measured profiles were approximated by calculated profiles based on the Law of the Wall and two Laws of the Wake (compare Ref. 6). The local skin-friction coefficient c_f and the boundary-layer thickness δ were obtained by this procedure, which is described in detail in Ref. 6. For the boundary-layer velocity profiles shown in Fig. 3, the wake component π_l, defined as

$$\pi_l = (\eta/2)\Delta(U/u_\tau) \tag{1}$$

becomes considerably smaller if the freestream turbulence intensity is increased. The profile shape becomes similar to that known from pipe flow. At the same time, the boundary-layer momentum thickness is about 50% larger compared to the lower turbulence case. If the three profiles are compared the almost negligible changes in the local shear—compared to the changes in the boundary-layer momentum thickness

Table 1 Grid dimensions

Grid no.	M, mm	D, mm	M/D
1	19	1.5	12.7
4	28	8	3.5
5	166	22	7.6
6	240	22	10.9

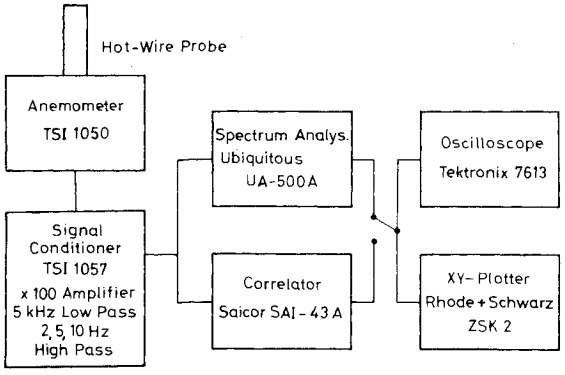

Fig. 5 Schematic diagram for spectra and correlation measurements.

δ_2—become evident. That is because the additive momentum loss does not change the derivative $d\delta_2/dx$.

With this new grid arrangement, the influence of the relatively low and constant turbulence intensities ($Tu_l < 1\%$) in a wind tunnel on the boundary-layer development could be studied. The most significant result obtained from boundary-layer investigations at different turbulence intensities is shown in Fig. 4, where the percentage deviation of the skin-friction coefficient Δc_f is plotted vs the turbulence intensity Tu_l. From this result and the additional information given in Ref. 6, the following conclusions can be drawn:

1) Based on the experimental results, the change in the skin-friction coefficients with increasing turbulence intensity can be described in the following forms:

$$Tu_l < 1\%: \Delta c_f/c_{fo} = 190 Tu_l^2 \tag{2}$$

$$Tu_l > 1\%: \Delta c_f/c_{fo} = 3.8 Tu_l - 0.019 \tag{3}$$

Obviously, both prediction methods (Refs. 2 and 3) considerably overestimate the influence of Tu_l on c_f for values $Tu_l < 1\%$.

2) According to the experiments, uncertainties exist as to whether the basic structure of the boundary layer is altered even by installation of very small grids. A study of the length scale distribution, as well as a frequency analysis in the freestream, should clarify this problem.

III. Investigation of the Freestream Turbulence Structure and its Effect on the Local Wall Shear Stress

A. Experimental Setup

In order to obtain information about the influence of the freestream turbulence structure on the wall shear stress, it was necessary to separate these effects from those resulting from the turbulence intensity. For this purpose, the size and position of the grids were chosen in such a way that the local turbulence intensity was approximately constant. The grid positions for this experiment are given in Fig. 2; the dimensions of the applied grids are summarized in Table 1.

At a fixed position from the leading edge measurements in the external freestream of the frequency spectra and

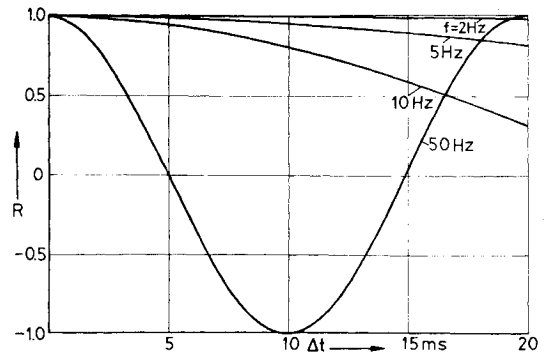

Fig. 6 Autocorrelation R of low-frequency sine waves.

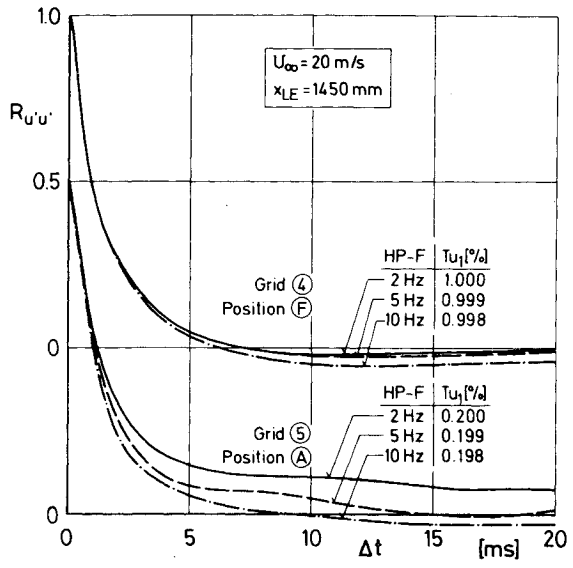

Fig. 7 Effect of different high-pass filters on the autocorrelation $R_{u'u'}$.

autocorrelations of the streamwise velocity fluctuations u' were carried out. Detailed information about the electronic equipment used in these experiments is given in Fig. 5.

For the purpose of the described experiment, it seemed to be sufficient to obtain only the differences in the skin-friction coefficients without having detailed information about the boundary-layer profile development. Thus the changes in the local wall shear stress were measured by means of surface hot films. This technique is described in Ref. 8. It has to be mentioned that the application of such sensors for measurements of very small differences in the skin friction implies accurate temperature controls and corrections.

B. Data Reduction Procedure

Earlier frequency spectra measurements in the low-turbulence wind tunnel indicated the existence of turbulent velocity fluctuations below $f = 10$ Hz. If the autocorrelation of the streamwise velocity fluctuations u', defined as

$$R_{u'u'}(\Delta t) = [\overline{u'(t)u'(t+\Delta t)}]/\overline{u'^2(t)} \tag{4}$$

is measured at very low turbulence levels, very large time shifts are needed to reach a value of $R_{u'u'}(\Delta t) = 0$, due to the low-frequency components. As an example, autocorrelations of sine waves at different low frequencies for a constant time base of 20 ms are shown in Fig. 6. This figure demonstrates that the autocorrelations $R_{u'u'}$ of frequencies less than 10 Hz have not reached zero for a time shift $\Delta t = 20$ ms, which is characteristic for our experiment. In Fig. 7, measured

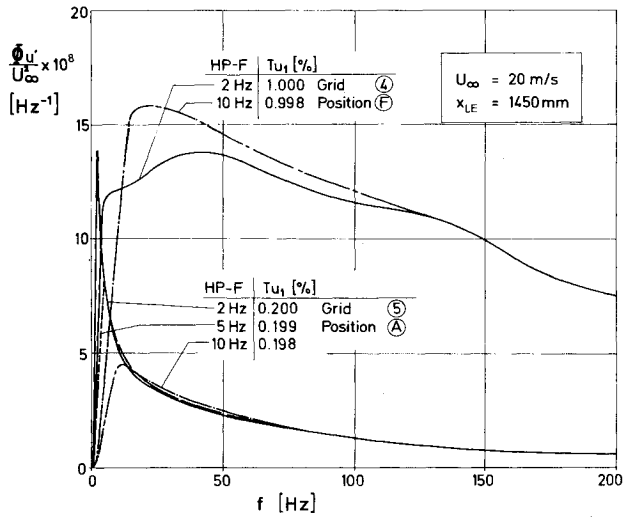

Fig. 8 Effect of different high-pass filters on the spectrum of u' at low ($Tu_l \approx 0.2$) and high ($Tu_l \approx 1\%$) intensity.

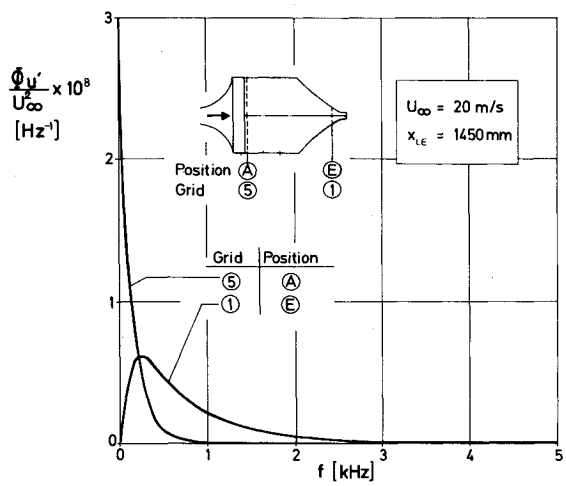

Fig. 9 Spectra of u' for two different grids and positions at $Tu_l \approx 0.2\%$.

correlations for relatively large ($Tu_l \approx 1\%$) and low ($Tu_l \approx 0.2\%$) grid-generated turbulence intensities are shown. The measurements were carried out applying three different high pass (HP) filters. From this result, it becomes clear that for $Tu_l \approx 1\%$, the effect of the 2 and 5 Hz HP filters is small compared to the corresponding correlation at $Tu_l \approx 0.2\%$. At this low intensity, the correlation does not decrease to zero within $\Delta t = 20$ ms for a 2 Hz HP filter. Because the area under the curve is representative for the integral time scale, defined as

$$T = \int_0^\infty [R_{u'u'}(\Delta t)]\mathrm{d}(\Delta t) \tag{5}$$

this would result in unrealistically large values of T. Thus for all following measurements, a 5 Hz HP filter was applied. The justification of such a correction is emphasized by the frequency spectra shown in Fig. 8. The power spectral density ϕ_u, normalized with the squared freestream velocity U_∞^2, is plotted against the frequency f using linear scales, so that the area under the curves represents the squared turbulence intensity Tu_l^2. To make evident how small the changes in the spectrum due to the different filters are, only a region up to 200 Hz is considered. While the turbulence intensity is almost not changed applying a HP filter of 5 Hz, there is a considerable effect on the integral length scale L_x. It can be

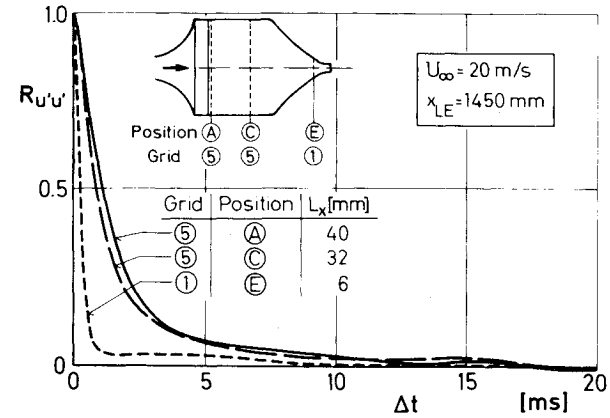

Fig. 10 Autocorrelations $R_{u'u'}$ for three different grids and positions at $Tu_l \approx 0.2\%$.

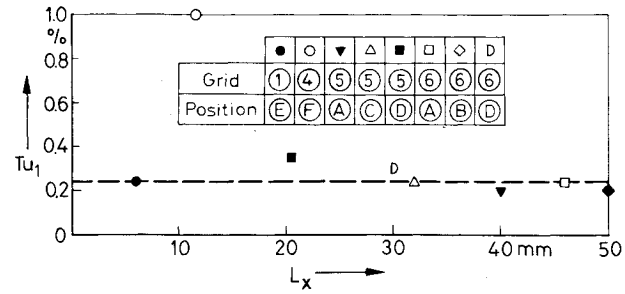

Fig. 11 Turbulence intensities Tu_l and integral length scales L_x for different grids and positions.

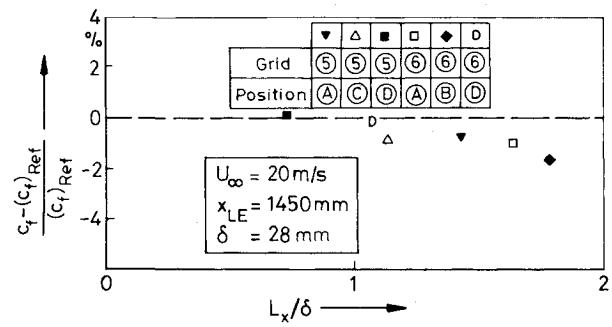

Fig. 12 Measured skin friction coefficients for different integral length scales at $Tu_l \approx 0.2\%$ [$(c_f)_{ref} = c_f$ at $L_x = \delta$].

calculated from the scale T, Eq. (5), using Taylor's hypothesis,

$$L_x = U_\infty T \tag{6}$$

For the calculation of the scale T, the integral boundary infinity in Eq. (5) was changed to the time shift of the first zero crossing, which means that only the area under the positive part of the correlation was considered for the data reduction.

C. Results

To demonstrate that completely different freestream turbulence spectra can be generated in a wind tunnel by means of different grid dimensions and positions, two characteristic spectra are shown in Fig. 9. A large grid installed in the settling chamber produces large portions of low-frequency velocity fluctuations, while a small grid in the nozzle mainly results in higher frequency components. If the areas under the spectra-curves are considered, it becomes clear that the turbulence intensities Tu_l are almost equal. Corresponding

autocorrelations $R_{u'u'}$ at $Tu_l \approx 0.2\%$ and the calculated length scales L_x are given in Fig. 10.

The measured turbulence intensities Tu_l and length scales L_x for all investigated flows with grid-generated turbulence are summarized in Fig. 11. All the length scales of $L_x > 20$ mm were obtained from grids positioned in the settling chamber. The small grid (4) in the nozzle, which produced a turbulence intensity of $Tu_l \approx 1\%$, was used as a reference grid, when the changes of the wall shear stress due to different length scales L_x were measured. All measured turbulence intensities of $Tu_l \approx 0.2\%$ can be considered to be constant as far as their influence on the skin friction is concerned. This is emphasized if the result given in Fig. 4 is accepted, namely, that the decrease of the influence of the turbulence intensity on the skin friction for $Tu_l < 1\%$ follows a quadratic relation [Eq. (2)].

Taking into account the spectra shown in Fig. 9, it seemed to be meaningful to investigate only flows where the structure of the grid-generated turbulence was similar. Thus, the wall shear stress measurements were carried out, so far, for length scales $L_x > 20$ mm. In Fig. 12, the percentage deviations of skin-friction coefficients are plotted vs the dimensionless length scale L_x/δ. The average boundary-layer thickness δ was taken from Ref. 6 ($\delta = 28$ mm). In order to avoid comparison of our results with those obtained at different turbulence structures of the flow, we took the skin-friction value for $L_x = \delta$ as a reference.

Before discussing this result, some remarks about the possible accuracy of the applied measuring techniques have to be considered. The maximum changes of the skin-friction coefficients with length scale are on the order of 1.5%. This is equivalent to a change of the flow temperature of about 0.2°C if a hot-film device is used for wall shear stress measurements (compare Ref. 8). A corresponding value for the Preston Tube technique would be a change in the Preston Tube pressure of $\Delta p = 1$ N/m^2, which results in a skin-friction change of about 1%. This clearly indicates how difficult this kind of investigation is, and that the measurements have to be carried out very carefully if reliable information is expected.

Even if the results obtained (Fig. 12) were on the order of the accuracy of the measuring technique, a tendency was indicated: The maximum wall shear stress values were measured in a range where the integral length scale of the freestream turbulence is on the order of the boundary-layer thickness δ.

IV. Summary of Results and Conclusions

The investigation about the influence of the wind-tunnel turbulence structure ($Tu_l \approx 0.2\%$) on the wall shear stress lead to the following results:

1) Different grid dimensions and positions generate turbulence of completely different spectra, even if the turbulence intensity is not changed. Thus in existing wind tunnels with the same turbulence intensity, different screens and/or honeycombs can imply different turbulence structures.

2) At a constant wind-tunnel turbulence intensity Tu_l, different spectra result in different integral length scales.

3) Maximum values of the skin-friction coefficient at $Tu_l \approx$ const were obtained at length scales in the order of the boundary-layer thickness δ. A doubling of the length scale decreases the skin-friction coefficient by about 1.5%, a value which has to be considered in the error bounds of the measuring accuracy. Unfortunately, the generation of large length scales is difficult to accomplish in the described wind tunnel. But it seems to be physically meaningful that a drastic increase of the length scale should no longer affect the boundary-layer development at such low turbulence intensities ($Tu_l < 0.2\%$). Consequently, in existing wind tunnels, for most investigated configurations, the effects will be small because the length scale is normally much larger than the boundary-layer thickness.

Not considered in the present investigations were the deviation of the grid-generated turbulence from isotropy, and the effect of length scales L_x much smaller than the boundary-layer thickness δ. Further research should also include the effect of the turbulence structure on the transition which was artificially fixed in our experiment.

Acknowledgment

The authors want to thank D. Baumgarten, who was responsible for the accomplishment of the measurements and data reduction.

References

[1] Bradshaw, P., "A Note on the Working-Section Turbulence in a Ludwieg-Tube," I.C.Aero. Rept. 74-01, 1974.

[2] Green, J. E., "On the Influence of Free Stream Turbulence on a Turbulent Boundary Layer, as it Relates to Wind Tunnel Testing at Subsonic Speeds," AGARD Rept. 602, 1973, pp. 4-1 to 4-8.

[3] Aihara Y., "Analytical Study of a Turbulent Boundary Layer Along a Flat Plate with External Flow Turbulence," DFVLR-AVA, Göttingen, W. Germany, Internal Rept. IB 75 A 33, 1975.

[4] Taylor, G. I., "The Statistical Theory of Isotropic Turbulence," *Journal of the Aerospace Sciences*, Vol. 4, 1937, pp. 311-315.

[5] Dryden, H. L., Schubauer, G. B., Mook Jr., W. C., and Skramstad, H. K., "Measurements of Intensity and Scale of Wind Tunnel Turbulence and their Relation to the Critical Reynolds Number of Spheres," NACA Tech. Rept. 581, 1937.

[6] Meier, H. U., "The Response of Turbulent Boundary Layers to Small Turbulence Levels in the External Free Stream," Paper 76-05, *Proceedings of the Tenth Congress of the International Council of Aerospace Sciences (ICAS)*, Ottawa/Canada, 1976, pp. 88-99.

[7] Meier, H. U., "The Effect of Velocity Fluctuations and Non-Uniformities in the Free Stream on the Boundary Layer Development," *Proceedings of the Symposium on Turbulent Shear Flows*, Penn. State Univ., Vol. 1, 1977, pp. 10.35-10.41.

[8] Kreplin, H.-P., Meier, H. U., and Maier, A., "Wind Tunnel Model and Measuring Techniques for the Investigation of Three-Dimensional Turbulent Boundary Layers," AIAA Paper 78-781, 1978.