ARTICLE NO. 79-0629R

J80-151

Wind Tunnel Study of Acoustical Disturbance Effect on Controlled Laminar Flow

20001
20004
30016

R. A. Mangiarotty* and A. J. Bohn*
Boeing Commerical Airplane Co., Seattle, Wash.

An exploratory study was conducted to investigate the sensitivity of laminar flow controlled (LFC) boundary layers to external acoustical disturbances using a 2.4-m (8-ft) span, 6.1-m (20-ft) chord, and 30-deg swept wing section with laminar flow control through spanwise slots. The objectives were to identify Tollmien-Schlichting and other amplification frequencies, critical disturbance levels in the boundary layer, the influence of suction rate on these disturbances, and the transfer function between an external sound field and the corresponding disturbance induced in the boundary layer. The frequency sensitivity and turbulence amplification effects of sound waves on a laminar boundary layer were determined experimentally and were found to occur within the predicted Tollmien-Schlichting oscillation range. Other unidentified amplification phenomena were also detected. Relationships between suction rate, induced acoustical particle velocity, and turbulence intensity have been established, and further analytical work is in progress. The study was part of a NASA contract to evaluate LFC systems for commerical transport aircraft.

Nomenclature

a = speed of sound, m/s (ft/s)
u_h = spectral fluctuating velocity, m/s (ft/s)
u_H = fluctuating velocity, m/s (ft/s)
u_M = sound particle velocity, m/s (ft/s)
U_T = tunnel freestream velocity, m/s (ft/s)
Q = suction flow rate m^3/s (ft^3/s)
ρa = characteristic impedance of air

Subscripts

h,H = hot-wire anemometer
M = microphone

Background

A PROGRAM has been conducted for NASA[1] to develop laminar flow control (LFC) technology for application to commerical aircraft.[2] This program included a wind tunnel study that was conducted in the Boeing research wind tunnel. A laminar flow controlled swept wing model was built for LFC aerodynamics development work and was also used for the exploratory study reported herein.

In the application of LFC to an aircraft, the influence of external acoustic disturbances on the stability of laminar boundary layers must be considered. It is known that the quantity of boundary-layer suction required to maintain laminar flow is increased by the imposition of high sound intensities. Air particle fluctuating displacements caused by impinging sound waves add to the displacements caused by flow turbulence, and the resulting disturbance velocities undergo the well-known Tollmien-Schlichting and cross-flow amplifications as the disturbances propagate in the boundary layer. These amplifications have been shown theoretically and experimentally[3,4] to occur only for the fluctuating disturbance velocity components in a limited frequency range corresponding to the Tollmien-Schlichting and cross-flow spectral regions.

An exploratory study was made to investigate these acoustical disturbance effects on the LFC study model, to acquire engineering data for use in the LFC program, and for comparison with other published results. The study also provided the opportunity to investigate wind tunnel testing techniques in a reverberant acoustical environment.

This paper presents results on the relationships determined between sound intensities, spectral content, and suction requirement to maintain LFC.

Objectives

The study was conducted to investigate the influence of the following physical parameters relating to the stability of a laminar boundary layer with suction control exposed to an acoustical disturbance: 1) identification of frequencies at which induced disturbances were amplified, e.g., Tollmien-Schlichting amplification frequencies; 2) critical fluctuating disturbance velocity ratio (u_H/U_T) at transition threshold, as a function of suction rate; 3) change in suction rates required to maintain laminar stability for a range of sound intensity disturbances; 4) transfer function between sound particle velocity in external field and fluctuating disturbance velocity induced in laminar boundary layer; 5) profile of induced disturbance velocity in boundary layer. This information was needed for comparison with the Tollmien-Schlichting critical frequency range[4,5] and associated critical velocity ratios predicted for the LFC model,[2] and to determine the quantity of suction required to maintain laminar flow for a range of imposed sound intensity fields.

Study Approach

Intense sonic environments of various spectral content and intensity were imposed on the upper suction surfaces of the model, with suction over 30% of the chord. Laminar flow transition thresholds were then determined by two approaches: first, by holding the suction flow rate and the imposed sonic spectral shape constant and varying the sonic intensity; and second, by holding the sonic intensity an spectral shape constant and varying the LFC suction flow rate. Transition was detected at the downstream edge of the

Presented as Paper 79-0629 at the AIAA 5th Aeroacoustics Conference, Seattle, Wash., March 12-14, 1979; submitted June 25, 1979; revision received Dec. 7, 1979. Copyright © American Institute of Aeronautics and Astronautics, Inc., 1979. All rights reserved. Reprints of this article may be ordered from AIAA Special Publications, 1290 Avenue of the Americas, New York, N.Y. 10104. Order by Article No. at top of page. Member price $2.00 each, nonmember, $3.00 each. **Remittance must accompany order.**

Index categories: Research Facilities and Instrumentation; Aeroacoustics; Boundary-Layer Stability and Transition.

*Senior Specialist Engineer, Noise Technology Staff, Preliminary Design Dept.

suction surface by observing the boundary layer total pressure profiles and hot-film traces on oscilloscopes. The above procedure was repeated with sonic inputs in a range of third-octave band frequencies to establish the test conditions of the threshold of transition.

The sound pressure level (SPL) outside the boundary layer is the usual measure of sound intensity; however, the induced associated velocity fluctuation in the layer is the parameter critical to the maintenance of laminar flow. In a semireverberant environment of a wind tunnel, the ratio of sound pressures and disturbance velocities (i.e., the acoustic impedance) vary widely due to standing wave effects. It was, therefore, an important part of the test to measure both the disturbance velocities in the boundary layer and the external SPL's.

The sonic environment at each established condition was first surveyed with a microphone. Then, fluctuating disturbance velocities were measured by a hot-wire anemometer at three locations within the thickness of the boundary layer. The wind tunnel flow speed, suction rate, and sonic level were maintained constant during these surveys. The established test conditions were repeated, and measurements were made at a number of stations identified in a later section. Great care was taken to repeat test conditions closely as the hot wire was moved to other locations. Test conditions included one of zero sonic input and one of very high sonic intensity.

Data were processed in the form illustrated in Fig. 1, which shows the magnitude of fluctuating disturbance u_H inside the boundary layer that can be tolerated at a particular disturbance frequency without causing transition; i.e., at the condition of "transition threshold" for a particular rate of suction. The objective is to determine the character of this curve and the frequency at which the lowest level of u_H will cause transition. This was accomplished as follows. One-third octave bandwidth noise was generated in the tunnel in a sequence of third-octave bands, and the resulting fluctuating velocity u_h induced in the boundary layer was measured at a number of noise level increments until "transition threshold" was reached. The process was repeated with noise at different third-octave band center frequencies. The resulting data were processed using Eq. (1) in computing critical velocity ratios. A similar procedure was applied in determining critical acoustical particle velocity, after acoustic pressures were converted to particle velocities using a "transfer function," which is described in the section on transfer function.

$$u_H = \sum_{f_2}^{f_1} u_h(f) \tag{1}$$

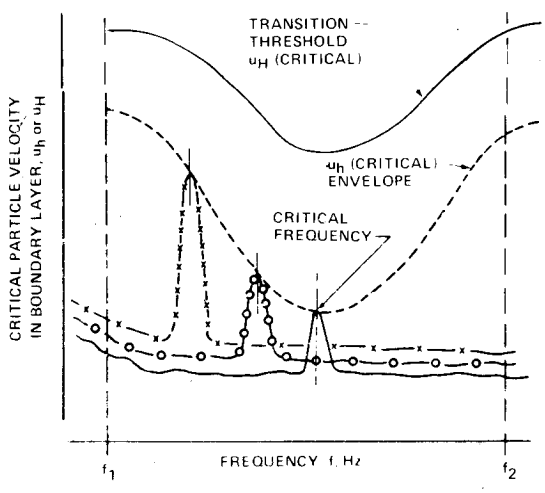

Fig. 1 Experimental method for determining transition threshold curve.

where $u_h(f)$ is the fluctuating velocity over frequency range f_1 to f_2 associated with a particular third-octave band-applied acoustic field.

Experimental Facility

The experimental work was conducted in the 1.5×2.4 m Boeing research wind tunnel at tunnel velocities (U_T) of 53 and 66 m/s. The LFC model was an 2.4-m span, 6.1-m chord, 30-deg swept wing section installed vertically in the tunnel (Fig. 2). Suction was applied through spanwise slots on the forward 30% (1.8 m) of the chord upper surface, and 15% (0.9 m) of the lower surface.

The noise generator was a modulated air horn, and the diaphragm coil was energized by a random signal source filtered in one-third octave bandwidth from 50 to 3150 Hz center frequencies. The noise generator was installed in two locations (Figs. 2 and 3) to produce predominantly oblique or normal incidence sound waves on the model surface. The sound fields were measured with ½-in. B&K condenser-type 4135 microphones with B&K UA 0386 aerodynamic nose cones. The microphones were installed horizontally, with the diaphragm facing upstream and normal to the model surface.

The fluctuating velocities in the boundary layer were measured with hot-wire sensors 0.00038 cm in diameter, mounted on a supporting device permitting remote control traversing of the boundary layer profile. The measuring locations for the sound field and disturbance velocity surveys are shown in Fig. 3. The output of the microphones and the anemometers was analyzed with a Fast Fourier Transform (FFT) analyzer having a 12.5 Hz bandwidth.

The equipment used had some features that are critical to the understanding of the results. The acoustic source can be described as an air valve at the horn throat, driven by a coil that was energized and modulated by an ac amplifier. When the noise generator was pressurized, a residual aerodynamic noise was generated by airflow through the valve. The valve "homed" in an intermediate position in the absence of a driving signal. When a drive signal was applied, a corresponding acoustic signal was generated by the airflow. Thus the test included three basic acoustic conditions as exemplified in Fig. 4, namely tunnel residual (no contribution from the sound generator); noise generator residual (air valve background noise superimposed on tunnel residual noise); and band-passed random noise superimposed on the residual levels. In results that follow, the intensity of the band-passed noise component will be referred to as the incremental acoustic input intensity.

Results and Discussion

Frequency Sensitivity

The sensitivity of laminar flow transition to the frequency of acoustical disturbances is indicated in Fig. 5. In this figure, fluctuating velocity spectra are presented that were measured in the boundary layer when acoustic disturbances were applied at various frequencies, and at maximum intensities at which stable laminar flow could be maintained at a constant suction rate. The boundary layer was found to be most sensitive in the 1.25-1.6 kHz frequency range. The acoustic input at a center frequency of 3.15 kHz (cond. 11.3) was limited due to insufficient power of the noise source above 2.5 kHz; therefore, the transition threshold level at 3.15 kHz is judged to be higher than shown. Figure 6 shows results of the same type of test described above, repeated with an approximately 50% increase in suction rate, with a similar sensitivity trend centered on a frequency of 1.6 kHz. These results are used to determine the critical fluctuating velocity amplitude and frequency as explained in Fig. 1.

Selective Amplification

It was noted in several results that "selective amplification" phenomena were occurring in the boundary layer at

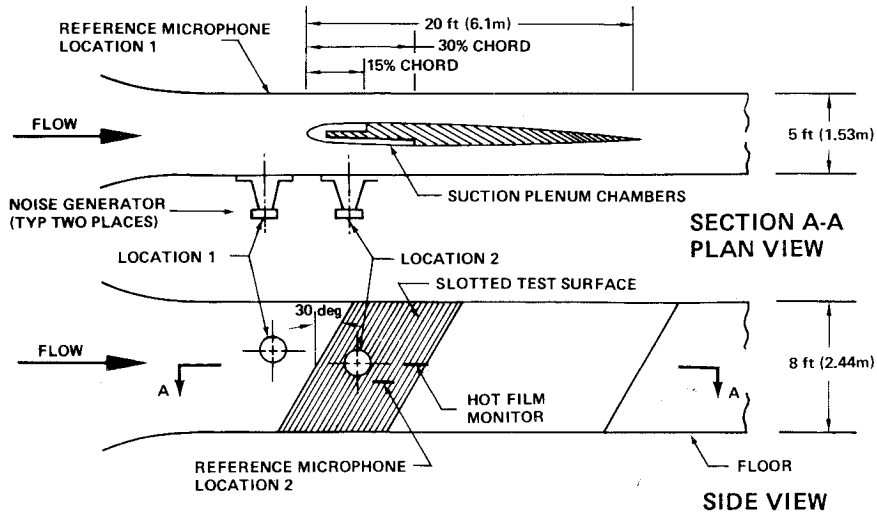

Fig. 2 Wind tunnel LFC acoustical test configuration.

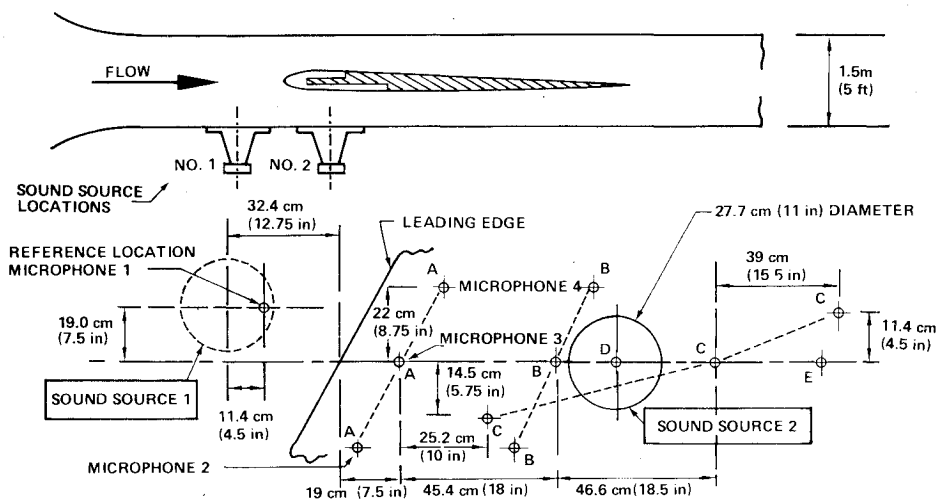

Fig. 3 Sound and fluctuating velocity survey on model.

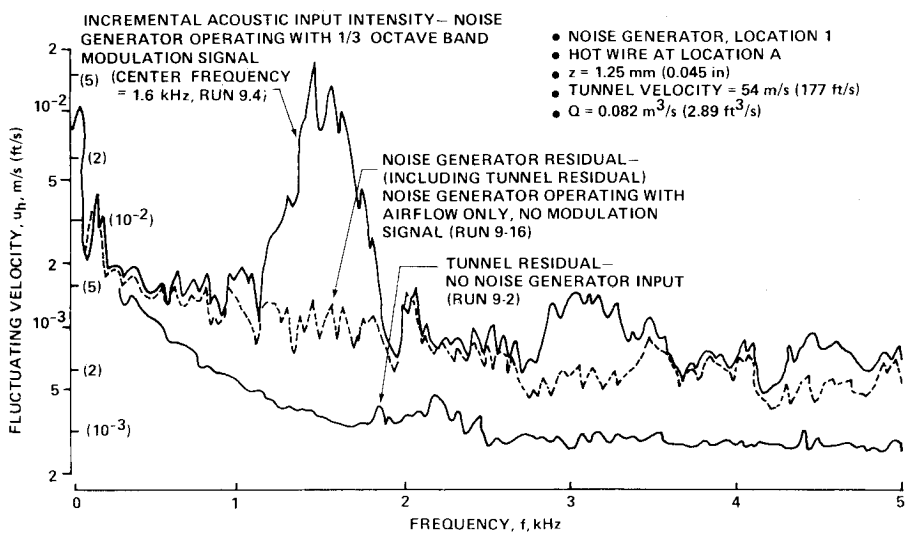

Fig. 4 Hot-wire response spectra—three basic acoustic conditions.

frequencies above or below that of the applied acoustic field, and their origin has not been identified to date. For example, in Fig. 5 a broad region of amplification in fluctuating velocity occurs in the 2-4.5 kHz range. When the suction rate was increased, however, these amplifications were substantially reduced or disappeared, as shown in Fig. 6. Similar amplifications occurred in several other tests. For example, in Fig. 7, a selective amplification occurred within the boundary layer in the frequency regions below and above the most sensitive region (1.6 kHz), but in this case no imposed acoustical disturbance was present.

In summary, these amplifications were noted in the frequency regions below 1 kHz and above 2 kHz, which varied with the chordwise location. In addition, the

magnitude of the amplifications varied within the height of the boundary layer and were sensitive to the suction rate. It is unlikely that they were critical Tollmien-Schlichting amplifications because they were outside the expected frequency range for the test model; however, they could represent other modes of boundary-layer instability.

Boundary-Layer Profile

Fluctuating velocity spectra were measured at several heights above the suction surface ($Z = 1.25$-12.5 mm) near the model leading edge, with a 1.6 kHz third-octave external sound field. Results shown in Fig. 8 indicate that the fluctuating velocity due to the induced sound did not vary appreciably with height. In a survey made downstream without an incremental acoustical disturbance present (Fig. 7), it was found that a substantial variation in fluctuating velocity occurred, with the largest disturbance amplification close to the suction surface.

The influence of the imposed acoustical energy on the mean velocity and turbulent energy distributions in a boundary layer is thought to be small compared to the changes resulting from transition. Further investigation would be required, however, to resolve this influence in any greater detail.

LFC Suction Rate

A summary of LFC suction rates vs the incremental acoustic field sound particle velocity is shown in Fig. 9 for one of the two tunnel velocities tested. The curves in this figure represent suction rates required to maintain a laminar boundary layer at two stability conditions relative to transition; namely, with minor bursts of turbulence at intervals of 3-5 s, and with approximately 50% turbulent and laminar flow alternating at intervals of several seconds, as observed on an oscilloscope. The sound particle velocity u_M is calculated from the sound pressure level measured at the model surface and the characteristic acoustic impedance, ρa.

The data were generated in the following manner: The tunnel was operated at constant stream velocity starting with a suction rate at a minimum level required to maintain a stable laminar flow, and the noise generator pressurized, but without a modulating signal (noise generator residual). The suction was then increased until turbulence (detected by the hot-film sensor at the trailing-edge end of the suction surface) was reduced to occasional bursts. A one-third octave signal at 1.6 kHz center frequency was then added, and the acoustic intensity increased (horizontal arrows) until turbulence bursts occupied 50% of the hot-film oscilloscope trace. Suction was increased again to achieve laminar flow with occasional bursts, as indicated by the arrows in Fig. 9. This process was repeated to generate the entire curve.

The tests demonstrated that an intermittent laminar boundary layer caused by an external acoustical disturbance can be restabilized by increasing the suction rate. However, the magnitude of the additional suction rate needed to stabilize the boundary increases with increasing sound intensity. It may be inferred from the shape of the curves that a

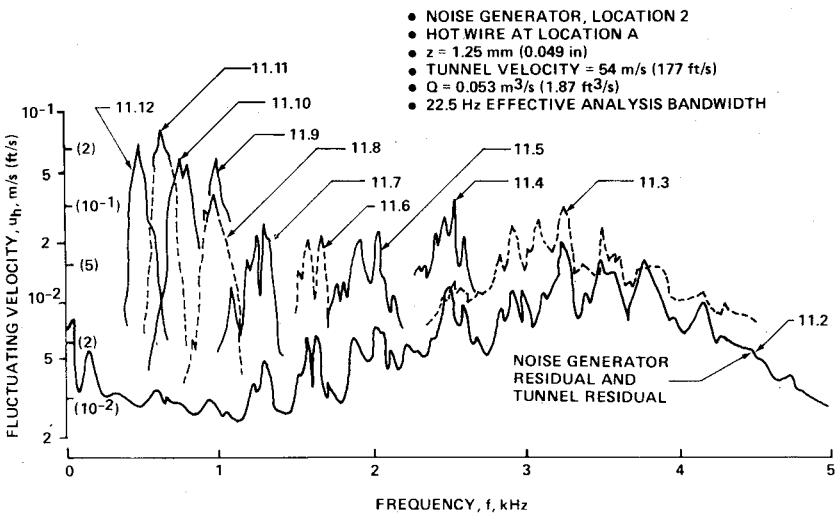

Fig. 5 Hot-wire response spectra at transition threshold due to applied acoustic signals of various frequencies (suction 0.053 m^3/s).

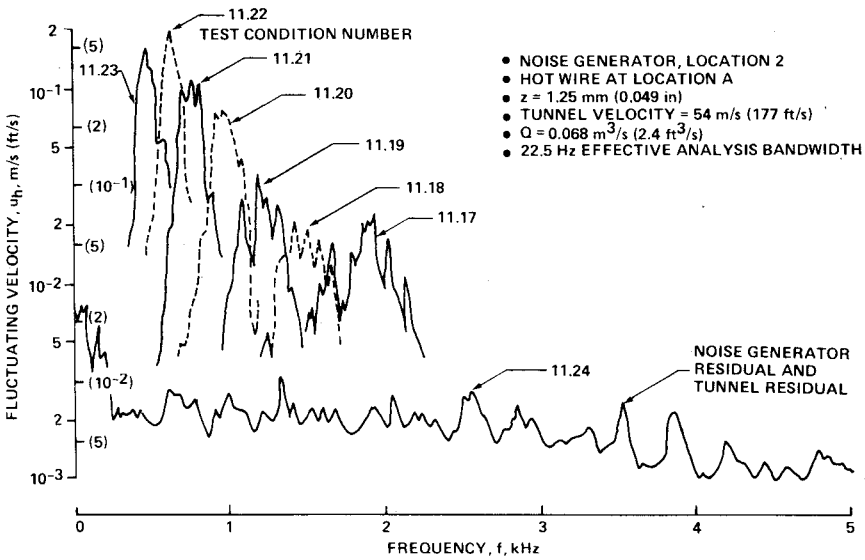

Fig. 6 Hot-wire response spectra at transition threshold due to applied acoustic signals of various frequencies (suction 0.068 m^3/s).

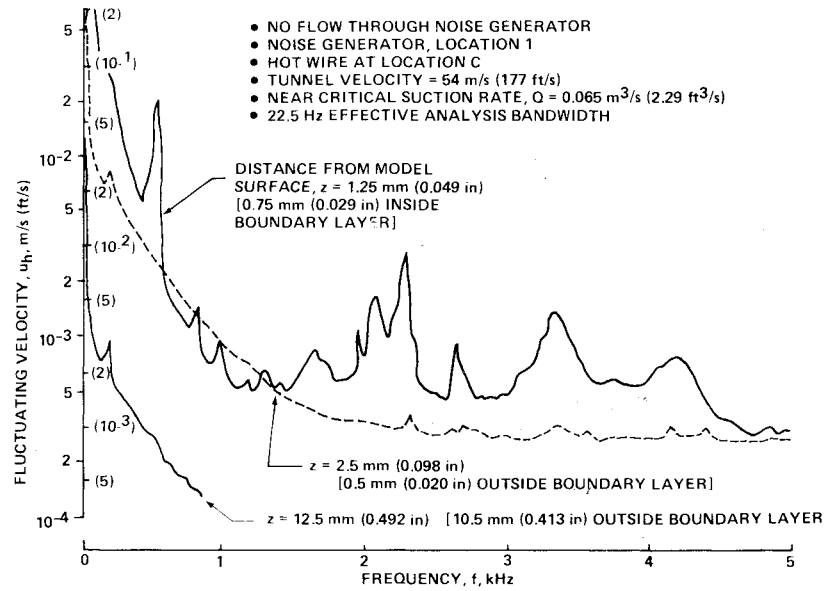

Fig. 7 Hot-wire response spectra at locations in and near the laminar boundary layer.

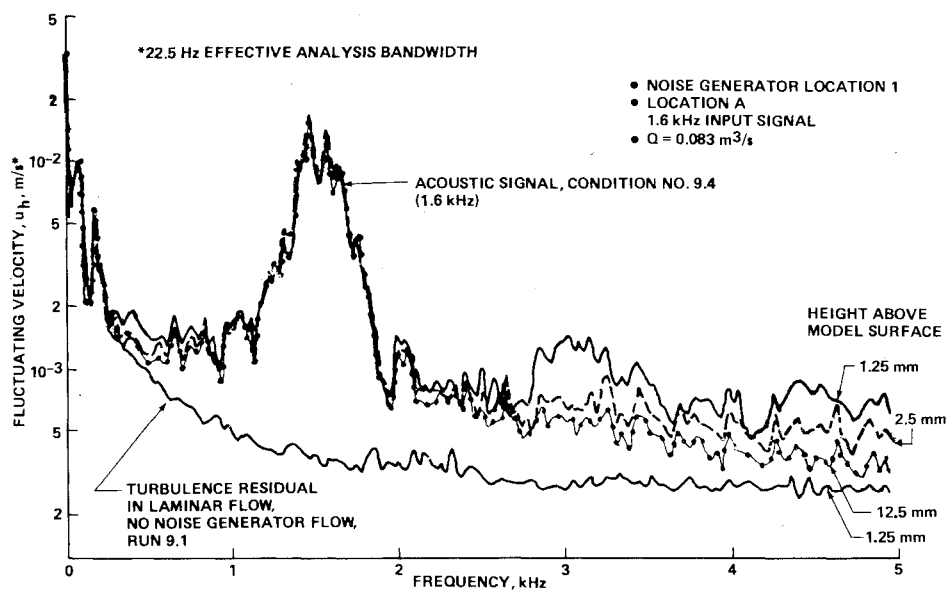

Fig. 8 Hot-wire profile spectra at various heights above LFC surface.

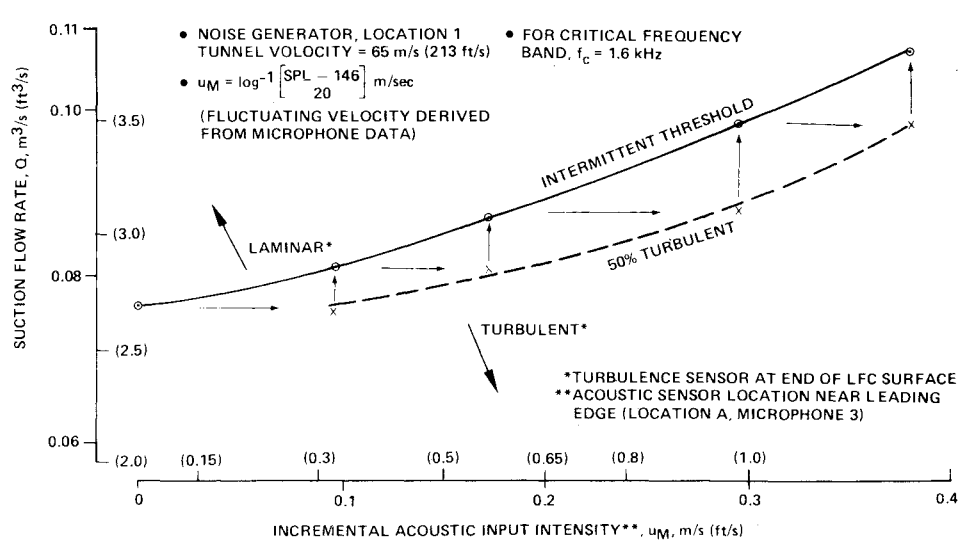

Fig. 9 Suction requirements vs incremental acoustic input intensity.

limit will be reached where restabilization by increasing the suction rate would not be achieved.

Critical Velocity Ratio

The critical velocity ratio (u_H/U_T) is defined as the ratio of the critical (lowest transition threshold) total fluctuating disturbance velocity u_H to the freestream velocity U_T. The total disturbance velocity u_H is the integral of the spectral component velocities u_h over the frequency range of the disturbance spectrum, as shown in Fig. 1. Critical velocity ratios at a condition of stable transition threshold are shown in Fig. 10. These velocity ratios were calculated from measured hot-wire velocities induced by sound in the critical third-octave band (1.6 kHz in this case) for a range of suction rates. The average suction rate used in the laminar flow aerodynamic studies was 0.07 m^3/s, which has a corresponding critical velocity ratio of 0.013. The data in Fig. 10 indicate that some level of critical velocity rate is reached beyond which increasing the suction flow rate will not have a significant effect. This would pose a maximum limit to the permissible critical velocity ratio.

Transfer Function

The relationship (i.e., transfer function) between the externally applied acoustic field and the induced fluctuating disturbance response in the boundary layer was investigated by comparing the acoustic particle velocity u_M, derived from the microphone measurements near the surface, as described below, and the fluctuating velocity u_H, measured with the hot wire in the boundary layer.

The transfer function can be used in conjunction with the stability theory to calculate the fluctuating disturbance velocity induced in a boundary layer by a known external acoustic field in order that a preliminary estimate of the suction requirement to maintain stable laminar flow can be made. Alternatively, a transfer function can be used to estimate the noise level that can be tolerated outside a boundary layer without causing transition, when the fluctuating velocity in the boundary layer is known. Although it is recognized that the current tests can only provide limited insight into the energy transfer mechanism, typical results are presented in Fig. 11. The following conditions apply to Fig. 11: noise generator downstream, location 2 (Fig. 3); measurements at location A, near leading edge (Fig. 3); tunnel flow velocity, $U_T = 54$ m/s (177 ft/s); suction flow rate, $Q = 0.069$ m^3/s (2.44 ft^3/s); u_H = fluctuating velocity (hot wire); and u_M = fluctuating velocity derived from microphone data.

The acoustic particle velocity u_M was calculated from the measured acoustic pressure by assuming the relationship $p_M/u_M = \rho a$ using the characteristic impedance of sound in a free field. On this basis, the transfer function between the

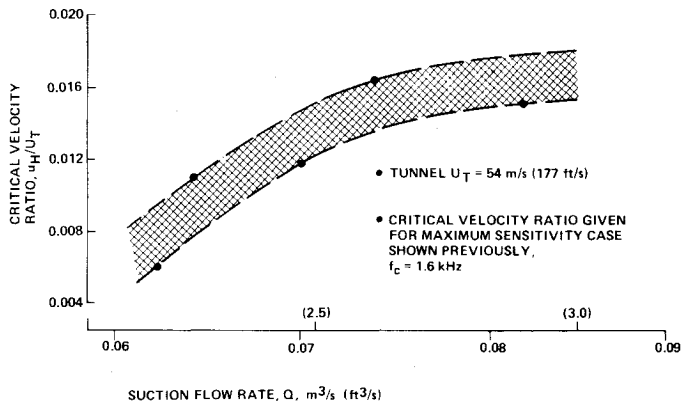

Fig. 10 Variation of critical velocity ratio with suction rate at stable transition threshold.

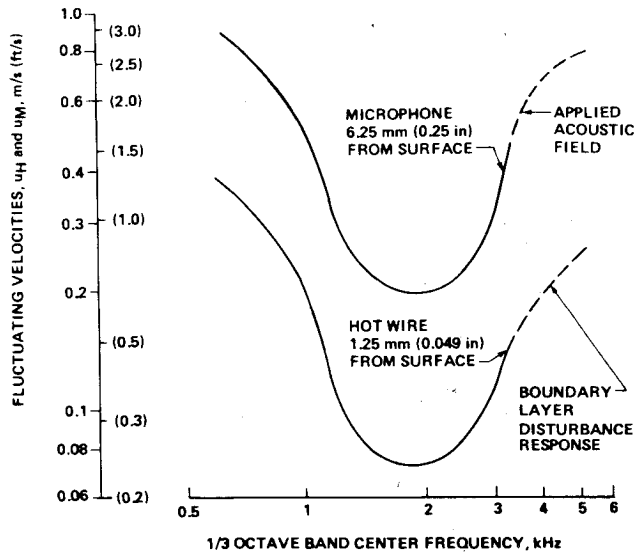

Fig. 11 Critical incremental acoustical velocity vs frequency—hot-wire and microphone sensors.

induced fluctuating velocity in the boundary layer and the external sound field velocity was found to be $u_H/u_M = 0.37$. Conversely, in order to obtain a transfer function of unity, an acoustic impedance of 2.7 ρa would be required (note that near a hard surface, the acoustic impedance may vary from 0 to ∞). It is apparent that much more data are necessary to establish the fundamental relationships involved in the energy transfer between an applied acoustic field and the vorticity mode associated with boundary-layer instability.

Concluding Remarks

Summarizing the results of the exploratory study, the following conclusions were reached on the influence of acoustical disturbances on the controlled laminar flow model investigated.

The frequency sensitivity of a laminar boundary layer to acoustical disturbances was clearly established. The critical frequency at which the lowest disturbance level caused transition occurred in the third-octave bands centered on 1.25 and 1.6 kHz, and was found to be within the predicted Tollmien-Schlichting range for the model tested ($400 < f_c < 2800$ Hz).

Other selective amplification phenomena were detected in the boundary layer, but, to date, have not been fully investigated. These are very sensitive to suction rate and were also observed without acoustical disturbances present.

Tests demonstrated that an intermittent laminar flow caused by an external sound field can be restabilized by increasing the suction rate. It was concluded, however, that an imposed sound intensity level exists, beyond which restabilization cannot be achieved by increasing the suction.

Critical velocity ratios at the most sensitive disturbance frequency have been developed from the experimental results yielding values of u_H/U_T between 0.010 and 0.015, depending upon suction rate for substantially laminar flow. These results support the design values recommended by W. Pfenninger[6]; namely, a critical velocity ratio of less than 0.050 but preferably 0.010.

A transfer function was developed from the results of the experiments for use in conjunction with stability theory, to calculate the fluctuating disturbance velocity induced in a boundary layer by a known external field. It is apparent that many more data are necessary to establish the fundamental relationships involved in the energy transfer between an applied acoustic field and the vorticity mode associated with boundary-layer stability.

Further analytical work is in progress. To date, a comparison of the present results with those of other LFC swept wing studies with external sound disturbances[7] has shown close agreement in both predicted and measured Tollmien-Schlichting amplification frequencies. Further comparative analyses will be made with other published observations where amplification of selected frequencies has occurred; e.g., the work of Jaffe et al.[4] and Wolfshtein[8] to develop a better understanding of the acoustic amplification mechanisms involved.

Acknowledgment

The authors gratefully acknowledge the valuable discussions and encouragement by L. B. Gratzer, Mgr., LFC Program, J. V. O'Keefe, Mgr., Noise Technology Staff, and the NASA Langley LFC Project Office for making this study possible.

References

[1] "Evaluation of Laminar Flow Control System Concepts for Subsonic Commercial Transport Aircraft," NASA Contract NAS1-14630, Oct. 1977-Oct. 1978.

[2] Gratzer, L. B. and George-Falvy, D., "Application of Laminar Flow Control Technology to Long Range Transport Design, CTOL Transport Technology—1978," NASA Conference Publication 2036, Pt. 1, Sec. 24, 1978, p. 408.

[3] Pfenninger, W., "Flow Problems of Swepth Low-Drag Suction Wings of Practical Construction at High Reynolds Numbers," *Annals of New York Academy of Sciences*, Vol. 154, Art. 2, Nov. 1968, p. 672-703.

[4] Jaffe, N. A., Okamura, T. T., and Smith, A.M.O., "Determination of Spatial Amplification Factors and Their Application to Predicting Transition," *AIAA Journal*, Vol. 8, Feb. 1970, pp. 301-308.

[5] Runyan, L. J. and George-Falvy, D., "Amplification Factors Corresponding to Transition on an Unswept Wing in a Wind Tunnel," Paper 79-0267, New Orleans, La., Jan. 1979.

[6] Pfenninger, W., private communication to R. A. Mangiarotty, NASA Langley Research Center, April 1978.

[7] Bacon, J. W., Jr., Pfenninger, W., and Moore, R. C., "Influence of Acoustical Disturbances on the Behavior of a Swept Laminar Suction Wing," Northrop Corp., Norair Div., Hawthorne, Calif., Rept. NOR-62-124 (BLC 141), Oct. 1962.

[8] *Turbulent Shear Flows I-Selected Papers from First International Symposium on Turbulent Shear Flows*, The Pennsylvania State University, University Park, Pa., April 1977, edited by F. Durst, B. E. Lauder, F. W. Schmidt, J. H. Whitelaw, Springer-Verlag, New York, 1979.

From the AIAA Progress in Astronautics and Aeronautics Series..

EXPERIMENTAL DIAGNOSTICS IN COMBUSTION OF SOLIDS—v. 63

Edited by Thomas L. Boggs, Naval Weapons Center, and Ben T. Zinn, Georgia Institute of Technology

The present volume was prepared as a sequel to Volume 53, *Experimental Diagnostics in Gas Phase Combustion Systems*, published in 1977. Its objective is similar to that of the gas phase combustion volume, namely, to assemble in one place a set of advanced expository treatments of the newest diagnostic methods that have emerged in recent years in experemental combustion research in heterogenous systems and to analyze both the potentials and the shortcomings in ways that would suggest directions for future development. The emphasis in the first volume was on homogenous gas phase systems, usually the subject of idealized laboratory researches; the emphasis in the present volume is on heterogenous two- or more-phase systems typical of those encountered in practical combustors.

As remarked in the 1977 volume, the particular diagnostic methods selected for presentation were largely undeveloped a decade ago. However, these more powerful methods now make possible a deeper and much more detailed understanding of the complex processes in combustion than we had thought feasible at that time.

Like the previous one, this volume was planned as a means to disseminate the techniques hitherto known only to specialists to the much broader community of reesearch scientists and development engineers in the combustion field. We believe that the articles and the selected references to the current literature contained in the articles will prove useful and stimulating.

339 pp., 6 × 9 illus., including one four-color plate, $20.00 Mem., $35.00 List

TO ORDER WRITE: Publications Dept., AIAA, 1290 Avenue of the Americas, New York, N.Y. 10019