200
J80-~~199~~

Determination of Forces on Arbitrary Concave Bodies in High-Speed Rarefied Gases

20013
40002

C. R. Wimberly*
Montana State University, Bozeman, Mont.

Abstract

THE method presented here utilizes the fundamentals discussed in the literature[1-5] to investigate the forces on concave bodies at angles of attack. Other investigators[6,7] have also determined the forces of some concave surfaces; however, their investigations were limited to molecular impingements on all parts of the surfaces.

A numerical process discussed in Ref. 8 is used here to integrate the effects over the concave surfaces, which permits the bodies to be oriented at arbitrary angles of attack ($0 \leq \alpha \leq 90$), at a relatively wide range of molecular speed ratios and with variable molecular accommodation.

Contents

The forces imparted to a concave surface can be determined by integrating the pressure over the total surface area since the effect of shear is zero.[4] The pressure is obtained from the freestream contribution plus the effect of interreflections. Since the body is at an angle of attack, the pressure distribution may be conveniently divided into one representing direct incidence and another representing the area receiving only reflected molecules. The pressure at any point in region I (area of direct incidence) can be written

$$P_I = P_f + 2P_w \sum_{j=1}^{\infty} F_{aj} \tag{1}$$

P_f and P_w are defined in Refs. 4 and 8. F_{aj} is the view factor traditionally used in radiant exchanges. The pressure in region II (area of reflected molecules only) is the same equation less the contribution of P_f. The drag on an arbitrary surface can be determined from the equation

$$D = \int_{\mathrm{I}} (\gamma \cdot P_{\mathrm{I}} + \zeta \cdot \tau_f)\, \mathrm{d}A_{\mathrm{I}} + \int_{\mathrm{II}} \lambda \cdot P_{\mathrm{II}}\, \mathrm{d}A_{\mathrm{II}} \tag{2}$$

Similarly, the lift can be determined from the equation

$$L = \int_{\mathrm{I}} (\xi \cdot P_{\mathrm{I}} + \psi \cdot \tau_f)\, \mathrm{d}A_{\mathrm{I}} + \int_{\mathrm{II}} \omega \cdot P_{\mathrm{II}}\, \mathrm{d}A_{\mathrm{II}} \tag{3}$$

$\gamma, \zeta, \lambda, \xi, \Psi$, and ω are the direction cosines and a function of the surface contour of the body.

Application

To illustrate the method, the concave hemisphere, semicircular cylinder and wedge were selected, each of which were oriented at an arbitrary angle of attack. It is assumed that the molecules do not strike the convex portion of the bodies. The ends of the cylinder are assumed to be open. The flow or mass flux of molecules is also assumed to strike perpendicular to the centerline of the cylinder.

Concave Hemisphere

For a concave hemispherical surface (Fig. 1), the angle factors for multireflections can be written

$$F_{aj} = \left(\frac{1}{2} - \frac{\alpha}{\pi}\right)(1/2)^{j-1} \tag{4}$$

where $j = 1, 2, 3, \ldots$, representing the number of interreflections (one less than the number of collisions).

The pressure at any point in region I can be written as

$$P_{\mathrm{I}} = P_f + 2\left(\frac{1}{2} - \frac{\alpha}{\pi}\right) P_w \sum_{j=1}^{\infty} (1/2)^{j-1} \tag{5}$$

The expression for region II is simply the second term in Eq. (5).

Utilizing these pressures, the total drag and lift coefficients for the concave hemisphere can be obtained. See Fig. 2 for geometry. The drag coefficient can be written:

$$C_D = \frac{D}{\frac{1}{2}\rho U^2 A_r} = \frac{1}{2S^2} \int_{\alpha}^{\pi-\alpha} [g(\theta) + h(\theta)] \sin\theta \mathrm{d}\theta + \frac{1}{2S\sqrt{\pi}} \times \int_{\alpha}^{\pi-\alpha} f(\theta) \cos^2\theta \mathrm{d}\theta + \frac{1}{S^2} 2\cos\alpha \left(\frac{1}{2} - \frac{\alpha}{\pi}\right) \sqrt{T_w/T} \tag{6}$$

The lift coefficient C_L can be obtained by changing the $\sin\theta$ to $\cos\theta$ in the first term and the $\cos^2\theta$ in the second term to $\sin\theta\cos\theta$.

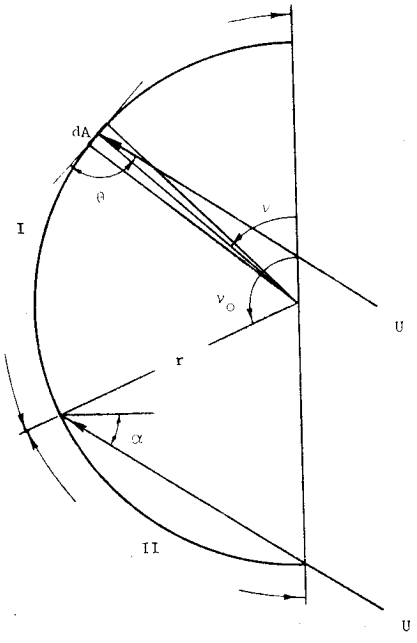

Fig. 1 Angular and regional definitions of the concave hemisphere and semicircular cylinder.

Received July 12, 1979; synoptic received Nov. 8, 1979; revision received Jan. 28, 1980. Full paper available from National Technical Information Service, Springfield, Va. 22151 as N80-20530 at the standard price (available upon request). Copyright © American Institute of Aeronautics and Astronautics, Inc., 1980. All rights reserved.

Index categories: Rarefied Flows; LV/M Aerodynamics.

*Professor and Head, Mechanical Engineering Department.

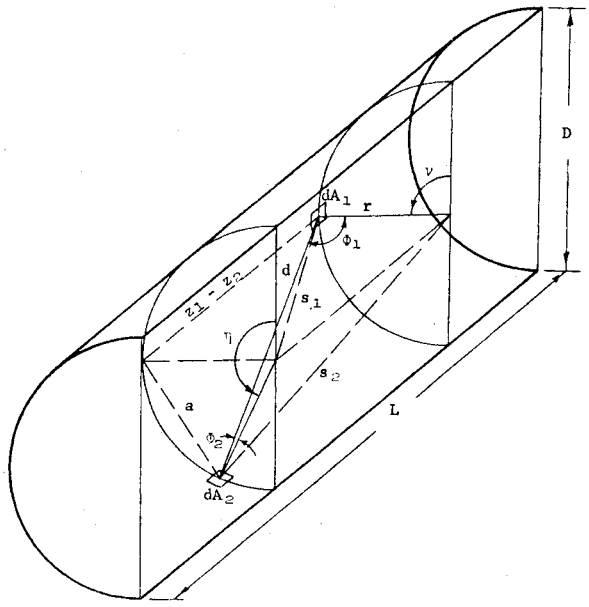

Fig. 2 Diffuse emission inside cylinder.

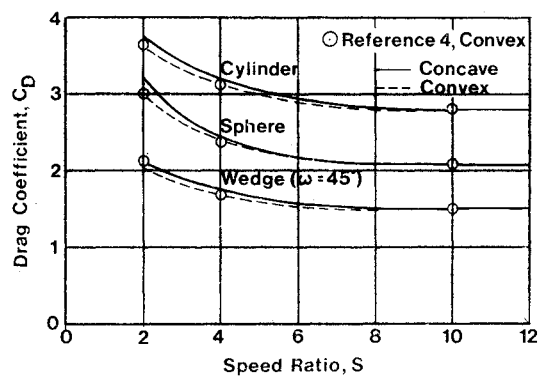

Fig. 3 Drag coefficient for a concave hemisphere, cylinder, and wedge in free molecule flow.

$$g(\theta)=\left[\frac{1}{\sqrt{\pi}}S\sin\theta+\frac{1}{2}\sqrt{T_w/T}\right]\exp(-S^2\sin^2\theta) \tag{7}$$

$$S=U/\sqrt{2RT} \tag{8}$$

$$h(\theta)=[1+\mathrm{erf}(S\sin\theta)]\,[\tfrac{1}{2}+S^2\sin^2\theta+(S\sin\theta/2)\sqrt{\pi T_w/T}] \tag{9}$$

$$f(\theta)=\exp(-S^2\sin^2\theta)+\sqrt{\pi}S\sin\theta[1+\mathrm{erf}(S\sin\theta)] \tag{10}$$

Concave Semicircular Cylinder

The pressure on a surface element for this configuration in region I can be expressed as

$$P_{\mathrm{I}}=P_f+\left[\frac{1}{2\pi}\int_0^{\eta_0}F(\eta,\nu,z)\,\mathrm{d}\eta\right]\sum_{j=1}^{\infty}\left[\frac{1}{4\pi}\int_0^{\pi}f(\eta,\nu,z)\,\mathrm{d}\eta\right]^{j-1}P_w \tag{11}$$

The pressure in region II is the same as the pressure in region I minus the freestream contribution.

$$f(\eta,\nu,z)=\epsilon_c\sin^2\left(\frac{\eta-\nu}{2}\right)\left[\frac{1-z}{\sin^2\frac{\eta-\nu}{2}+\epsilon_c^2(1-z)^2}+\frac{z}{\sin^2\left(\frac{\eta-\nu}{2}\right)+\epsilon_c^2z^2}\right]+\sin\left(\frac{\eta-\nu}{2}\right)\times\left[\tan^{-1}\frac{\epsilon_c(1-z)}{\sin\left(\frac{\eta-\nu}{2}\right)}+\tan^{-1}\frac{\epsilon_c z}{\sin\left(\frac{\eta-\nu}{2}\right)}\right]\mathrm{d}\eta \tag{12}$$

$j=1, 2, 3,\ldots,$ representing the number of interreflections.

The drag and lift coefficients for the cylinder are obtained by appropriate directional integration of the differential forces.

$$C_D=\frac{D_r}{\frac{1}{2}\rho U^2LD}=\frac{1}{2S^2}\int_\alpha^{\pi-\alpha}[g(\theta)+h(\theta)]\sin\theta\mathrm{d}\theta+\frac{1}{S\sqrt{\pi}}\times\int_\alpha^{\pi-\alpha}f(\theta)\cos^2\theta\mathrm{d}\theta+\frac{1}{4S^2}\sqrt{T_w/T}\int_\alpha^{\pi-\alpha}\int_0^1 JH\sin\theta\mathrm{d}z\mathrm{d}\theta \tag{13}$$

$$C_L=\frac{1}{S\sqrt{\pi}}\int_\alpha^{\pi-\alpha}f(\theta)\sin\theta\cos\theta\mathrm{d}\theta-\frac{1}{4S^2}\sqrt{T_w/T}\int_{-\alpha}^{\alpha}\int_0^1 HJ\cos\theta\mathrm{d}z\mathrm{d}\theta \tag{14}$$

where $g(\theta)$, $h(\theta)$, and $f(\theta)$ are defined by Eqs. (8), (9) and (10), respectively. The values of H and J are defined as follows.

$$H=\sum_{j=1}^{\infty}\left[\frac{1}{4\pi}\int_0^{\pi}f(\eta,\nu,z)\right]^{j-1} \tag{15}$$

$$J=\frac{1}{2\pi}\int_0^{\pi-2\alpha}f(\eta,\nu,z)\,\mathrm{d}\eta \tag{16}$$

The drag coefficient is plotted in Fig. 3 as a function of speed ratio, indicating an effect of concavity.

References

[1] Jeans, J., *An Introduction to the Kinetic Theory of Gases*, Cambridge University Press, 1962.

[2] Loeb, L. B., *The Kinetic Theory of Gases*, Dover Publications, Inc., 3rd ed., New York, 1961.

[3] Patterson, G. M., *The Molecular Flow of Gases*, John Wiley & Sons, New York, 1956.

[4] Schaff, S. A., and Chambre, P. L., "Flow of Rarefied Gases," *Fundamentals of Gas Dynamics*, edited by H. W. Emmonds, Princeton University Press, Princeton, N.J., 1958, Sec. h, pp. 687-739.

[5] Oppenheim, A. K., "Generalized Theory of Conective Heat Transfer in a Free-Molecule Flow," *Journal of Aeronautical Science*, Jan. 1953, pp. 49-58.

[6] Chahine, M. T., "Free Molecule Flow Over Non-Convex Surfaces," *Rarefied Gas Dyanmics*, edited by L. Talbot, Academic Press, New York, 1961, pp. 209-230.

[7] Pratt, M. J., "The Free Molecule Flow Characteristics of Concave Surfaces," The College of Aeronautics, Cranfield, Note 155, June 1953.

[8] Wimberly, C. R., "Convective Heating of Concave Bodies in High Speed Rarefied Gases," Paper presented at the 6th International Heat Transfer Conference, Vol. 4, Toronto, Canada, 1978, pp. 209-214.