near the shock front to the functional form of Eq. (13), the value $\Delta n_s = (1.9 \pm 0.2) \times 10^{-5}$ was obtained for the jump in refractive index across the shock.

Combining the contribution of the bulk [Eq. (9)] with that of the boundary [Eq. (13)] we get:

$$\phi(b) = -\left[\frac{k'p}{p'\Delta} + \frac{2\Delta n_s}{(a_s^2 - b^2)^{1/2}}\right] b \tag{14}$$

The revised constant k' is calculated by equating the small b limit of Eq. (14) with the linear approximation [Eq. (9)]

$$\frac{k'p}{p'\Delta} + \frac{2\Delta n_s}{a_s} = \frac{kp}{p'\Delta}$$

$$k' = k - (2\Delta n_s p'\Delta / p a_s) = 1.02 \pm 0.07 \text{ mm} \tag{15}$$

The final refractive index distribution plotted in Fig. 5 as $\Delta\rho$ is given by

$$\Delta n(a) = \Delta n_s + \frac{1}{\pi}\frac{k'}{p'}\frac{p}{\Delta}(a_s^2 - a^2)^{1/2} \tag{16}$$

The experimental error in density of $\pm 1 \times 10^{-5}$ g/cm^3 is due mainly to the uncertainty in Δn_s.

Summary

In the present Note we demonstrate the application of moire deflectometry to the analysis of axisymmetric flows. It is shown that by evaluation of only two parameters from a deflectogram it is possible to map, with an accuracy of about 10%, the whole density field pattern in conical flows. Good agreement between the experimental and theoretical results was observed.

References

[1]Kafri, O., "Noncoherent Method for Mapping Phase Objects," *Optics Letters*, Vol. 5, Dec. 1980, pp. 555-557.

[2]Stricker, J. and Kafri, O., "Moire Deflectometry, a New Method for Density Gradient Measurements in Compressible Flows," *AIAA Journal*, Vol. 20, March 1982.

[3]"Equations, Tables and Charts for Compressible Flow," NACA Rept. 1135, 1953.

[4]Shapiro, A. H., *The Dynamics and Thermodynamics of Compressible Fluid Flow*, Part II, The Ronald Press, N.Y., 1953; also, Taylor, G. I. and Maccoll, J. W., *Proceedings of the Royal Society*, Series A, Vol. 139, 1933, p. 278.

[5]Keren, E., Bar-Ziv, E., Glatt, I., and Kafri, O., "Measurements of Temperature Distribution of Flames by Moire Deflectometry," *Applied Optics*, Vol. 20, Dec. 1981, pp. 4263-4266.

Inlet Flow Distortion in Turbomachinery: Comparison of Theory and Experiment in a Transonic Fan Stage

B. S. Seidel* and M. D. Matwey†
University of Delaware, Newark, Delaware

BOTH velocity and temperature circumferential inlet distortions are considered at upstream infinity.[5] The blade rows (Fig. 1) are modeled as semiactuator disks. Losses and quasisteady deviation angle correlations are included in the analysis. Some of the earlier papers in this area may be found in Refs. 1, 3, and 4.

The governing equations were linearized, and the perturbations in stagnation pressure and stagnation temperature (p_0 and T_0, respectively) at upstream infinity (station 1) were represented as Fourier series. The flow in the rotor is modeled as inviscid, one dimensional, compressible, and unsteady. Elsewhere the flow is steady. The deviation angles for the rotor and stator are taken to be functions of the relative inlet angle and Mach number and the correlations in Ref. 6 are used. The losses in relative stagnation pressure in the rotor and stator are assumed to occur across the trailing edge and, again, correlations from Ref. 6 were incorporated in the analysis.

Boundary conditions applied at the various stations (Fig. 1) supply the equations which permit one to solve for the several quantities introduced in the linearization of the governing equations. When the mean relative Mach number at station 2, M_2^{REL}, was greater than 1, the flow there was modeled as shown in Fig. 2.

The bow wave distance is then taken to be a function of β_2 and M_2^{REL}, as in Ref. 7. In either case, $M_2^{\text{REL}} < 1$ or $M_2^{\text{REL}} > 1$, the boundary conditions supply the linear algebraic equations for the perturbation quantities.

Results

Transonic Fan Stage

In Ref. 2, experimental data on a transonic fan stage with circumferential inlet flow distortion is given. The measurements taken at 45% from the lip, 100% design speed, and maximum mass flow are used in the following comparison with theory.

In the calculations for the theory, an effective rotor passage length of

$$\xi_{\text{eff}} = \xi_R - (s\sin\theta_I - \bar{L})$$

was taken, where $\bar{L}$ is the standoff distance, s blade spacing, θ_I the rotor stagger angle, and ξ_R rotor chord length. When the theory is specialized to an actuator disk, station 2A (downstream of the Prandtl-Meyer expansion) is taken out, as well as all mention of $\dot{L}$ (rate of change of standoff distance).

Figure 3 shows the distortion in stagnation pressure imposed on the stage and Fig. 4 shows the stagnation pressure perturbation at station 5, theory (calculated in two ways) and experiment. To a large extent, the experimental curve lies between the two computations for the theory. The theory is for hub-tip ratios near unity and a shock in each blade passage extending from root-to-tip. In the experiment, the hub-tip ratio is <1; there is a shock in each passage but these shocks do not extend from root-to-tip. The curves were computed using 18 harmonics. The theory shows, that for transonic

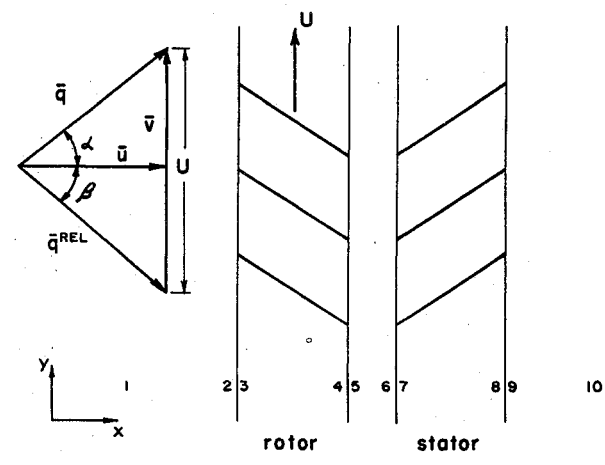

Fig. 1 Coordinates and notation.

Received July 27, 1981; revision received Feb. 23, 1983. This paper is declared a work of the U.S. Government and therefore is in the public domain.

*Professor, Department of Mechanical and Aerospace Engineering.
†Graduate Student.

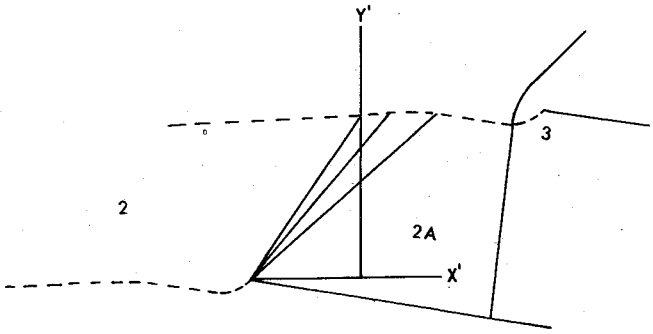

Fig. 2 Bow wave, passage shock, and Prandtl-Meyer expansion.

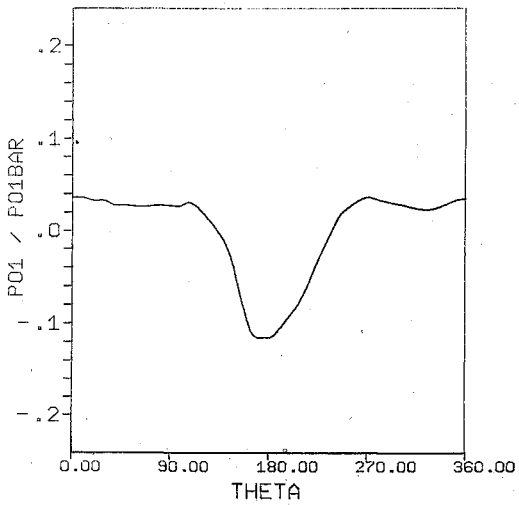

Fig. 3 The distortion imposed on the compressor stage of (2), 100% design speed, maximum mass flow.

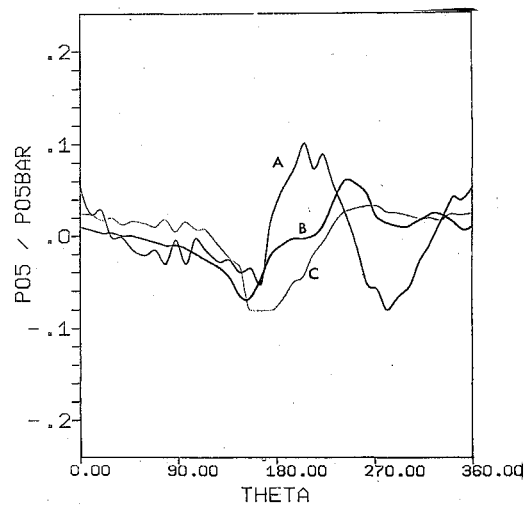

Fig. 4 Stagnation pressure perturbation at station 5, theory and experiment: curve A is theory taken with finite chord, $\xi_{\text{eff}} = \xi_R - (s\sin\theta_I - \bar{L})$; curve B in the experiment and curve C is theory taken with zero chord.

relative Mach numbers, there is, at least for the sample case calculated, a strong amplificaiton of stagnation pressure perturbations with increasing chord/mean radius (increasing reduced frequency). It is perhaps this amplification which is showing up in the higher harmonics evident in Fig. 4. Figure 5 shows the stagnation temperature perturbations at station 5 (between rotor and stator).

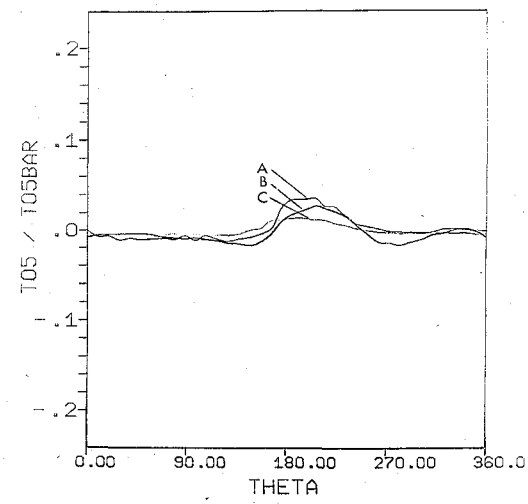

Fig. 5 Stagnation temperature perturbation at station 5, theory and experiment: curve A is theory taken with finite chord, $\xi_{\text{eff}} = \xi_R - (s\sin\theta_I - \bar{L})$; curve B is the experiment; and curve C is theory taken with zero chord.

Acknowledgments

This work would not have been possible without the support of NASA (Grant NSG 3189), the programming and checking done by Larry Perkins, University of Deleware, and the assistance of the Univeristy of Delaware Computing Center.

References

[1] "Distortion Induced Engine Instability," Advisory Group for Aerospace Research and Development (AGARD), Lecture Series No. 72, Oct. 1974.

[2] Sanger, N. L., "Performance of a 1.57-Pressure-Ratio Transonic Fan Stage with a Screen-Induced 90° Circumferential Inlet Flow Distortion," NASA TN D-8163, Feb. 1976.

[3] Ehrich, F. F., "Circumferential Inlet Distortions in Axial Flow Turbo-machinery," *Journal of the Aeronautical Sciences*, Vol. 24, No. 6, June 1957, pp. 413-417.

[4] Rannie, W. D. and Marble, F. E., "Unsteady Flows in Axial Turbomachines," presented at International Days of Aeronautical Sciences, Paris, France, May 1957.

[5] Seidel, B. S., Matwey, M. D., and Adamczyk, J. J., "Inlet Flow Distortion in Turbomachinery," *Engineering for Power*, Vol. 102, No. 4, Oct. 1980.

[6] "Aerodynamic Design of Axial-Flow Compressors," edited by I. A. Johnson and R. O. Bullock, NASA SP-36, 1965.

[7] Miller, G. R. and Hartmann, J. J., "Experimental Shock Configurations and Shock Losses in a Transonic-Compressor Rotor at Design Speed," NACA RM E58A14b, June 1958.

Linearized Unsteady Flame Surface Approximation Result in Complex Notation

T. S. Sheshadri*
Indian Institute of Science, Bangalore, India

Nomenclature

$f_i(r)$ = complex functions of position vector r, $i = \alpha_f, \alpha_{ox}, \beta$

Received Feb. 26, 1983. Copyright © American Institute of Aeronautics and Astronautics Inc., 1983. All rights reserved.

*Lecturer, Department of Aerospace Engineering.