Coordination Chemistry of β-Ketoamides: Synthesis of Copper(II) Complexes, X-ray Structure of Bis(1-*N*-benzylamino-1,3-butanedionate)copper(II) and Nucleophilic Behavior of the Metal–β-Carbonylenolate Ring toward Cyanogen and Benzoyl Cyanide

B. CORAIN, E. SCANAGATTA, M. BASATO

Centro di Studio sulla Stabilita' e Reattivita' dei Composti di Coordinazione, CNR, Dipartimento di Chimica Inorganica, Metallorganica ed Analitica, Universita' di Padova, 35131 Padua, Italy

G. VALLE

Centro di Studio sui Biopolimeri, Dipartimento di Chimica Organica, Universita' di Padova, 35131 Padua, Italy

S. SITRAN

Istituto di Chimica e Tecnologia dei Radioelementi, CNR, Area della Ricerca, 35100 Padua, Italy

and A. C. VERONESE

Dipartimento di Scienze Farmaceutiche, Universita' di Ferrara, 44100 Ferrara, Italy

(Received December 3, 1987)

Abstract

N-Monosubstituted β-ketoamides react almost quantitatively with copper(II) acetate in a 1/1 ethanol–water mixture at *ca.* 40 °C when acetic acid and solvent are removed at reduced pressure. The novel bis(β-ketoamidate)copper(II) complexes, which can be obtained with this synthetic procedure, are O,O′-bonded species, thermally stable both in the solid state and in solution of polar solvents. The crystal structure of bis(1-*N*-benzylamino-1,3-butanedionate)copper(II) has been determined. Crystals are orthorhombic, space group *Pbca* with $Z = 4$, in a unit cell of dimension $a = 19.506(5)$, $b = 11.901(4)$, $c = 8.726(3)$ Å. The structure was solved by the heavy atom method and refined to $R = 0.048$ for 915 independent reflections. The complex is monomeric and no intermolecular Cu...O or Cu...N interactions are observed. The bis(benzoylacetanilidate)-copper(II) complex reacts with cyanogen or benzoyl cyanide to give addition–insertion at the methino group of the metal–β-ketoamidate ring.

Introduction

Homo- and heteroleptic metal β-diketonate complexes represent one of the most intensively and thoroughly investigated class of coordination compounds [1]. The first examples belong to the early hystory of coordination chemistry and a considerable number of practical applications (mainly analytical) have stemmed from their physico-chemical properties. β-Ketoamides can be considered ligand precursors rather similar to β-diketones and, in fact, a number of investigations, mainly on their interaction with metal centers in solution, is available [2]. It is noteworthy that papers describing the preparation and solid state properties of homoleptic β-ketoamidate complexes are comparatively very few (Cu [3, 4], Fe [5], Be, Al, Cr [6]). In particular, no X-ray structural analysis has been reported, to our knowledge, so far.

In the frame of our extensive investigation on the nucleophilic behavior of the metal–β-diketonate ring [7], we were able to promote the addition of β-ketoamides to cyanogen in the presence of catalytic amounts of $[Cu(acac)_2]$ [3]. The addition reaction was chemospecific in giving metastable β-enaminodiones and we postulated the *in situ* generation of complexes **1** upon reaction of the free ketoamides with the employed catalyst.

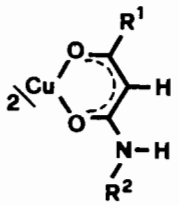

1 (R^1, R^2): **a** (Me, H), **b** (Me, CH_2Ph), **c** (Me, Ph), **d** (Me, *o*-OMe-C_6H_4), **e** (Me, *p*-Cl-C_6H_4), **f** (Me, n-pentyl), **g** (Me, i-Bu), **h** (Ph, Ph)

We report here on a general and effective synthetic route to complexes **1** as well as on the X-ray structure of **1b**. The choice of the nature of the substituents R^1, R^2 is related to the known strong dependence of the formation constant of this type of complexes

0020-1693/88/$3.50 © Elsevier Sequoia/Printed in Switzerland

(in dioxane–water mixtures) on the acidity of the ligand precursor [2]. In order to evaluate the scope of the synthetic procedure herein described, we chose substituents bearing various electronic and steric features. Furthermore, the reactivity of **1h** towards cyanogen and benzoyl cyanide has been tested.

Experimental

All melting points were taken in capillary tubes with a Büchi apparatus and are uncorrected. IR spectra (nujol mull) were recorded on Perkin-Elmer 781 and 257 instruments; UV–Vis spectra were measured on a Perkin-Elmer Lambda 5 apparatus; mass spectra were obtained by a VG Micromass 16F and simultaneous thermogravimetry-differential thermal analysis (TG-DTA) were performed on a Netzsch STA 429 equipment. Solvents were of reagent grade and $Cu(acetate)_2 \cdot H_2O$ was from Baker. β-Ketoamides were commercially available or were prepared according to a published method involving the reaction of the amine with diketene [8].

Syntheses

Complexes **1** were prepared by a general procedure, which can be summarized as follows. Copper acetate (1 mmol) is dissolved in the smallest volume of water (*ca.* 5 cm^3) and the solution is added dropwise to a solution (or suspension) of the required β-ketoamide in ethanol, under stirring. Sudden color changes or partial precipitation (for **1e** and **1h**) of the products occur and after 30 min the reacting mixture is poured into the flask of a rotating evaporator. The solvents are slowly removed (water vacuum pump) at *ca.* 40 °C almost to dryness, the residue is treated with a 1/1 water ethanol–mixture (*ca.* 100 cm^3) and the mixture is again reduced to a small volume. 3–4 Cycles of this treatment are generally sufficient to drive the reaction to a good yield and the microcrystalline products are filtered off and dried under vacuum. Further details are reported below.

1a, pale green, washed with ethylacetate. Yield 93%, decomposition at *ca.* 200 °C. *Anal.* Calc. for $C_8H_{12}CuN_2O_4$: C, 36.43; H, 4.59; N, 10.62. Found: C, 36.38; H, 4.63; N, 10.35%.

1b, sage green, washed with water and diethyl ether. Yield 97%, melting point (m.p.) 208–209 °C. *Anal.* Calc. for $C_{22}H_{24}CuN_2O_4$: C, 59.52; H, 5.45; N, 6.31. Found: C, 59.50; H, 5.0; N, 6.26%.

1c, dark green, washed with water and diethyl ether. Yield 90%, m.p. 222–223 °C. *Anal.* Calc. for $C_{20}H_{20}CuN_2O_4$: C, 57.75; H, 4.85; N, 6.74. Found: C, 57.00; H, 4.80; N, 6.58%.

1d, dark green, washed with water and diethyl ether. Yield 89%, decomposition at *ca.* 200 °C. *Anal.* Calc. for $C_{24}H_{24}CuN_2O_4$: C, 55.52; H, 5.08; N, 5.89. Found: C, 54.89; H, 5.11; N, 5.67%.

1e, yellowish green, washed with water and diethyl ether Yield 90%, m.p. 242–243 °C. *Anal.* Calc. for $C_{20}H_{18}Cl_2CuN_2O_4$: C, 49.55; H, 3.78; N, 5.78. Found: C, 49.81; H, 3.94; N, 5.77%.

1f, green; the residue obtained after three solvent evaporation cycles is an oil, which is treated with n-hexane under stirring for 24 h. The green powder so obtained is filtered and washed with water. The estimated yield is 67%. The material is not analytically pure. *Anal.* Calc. for $C_{18}H_{32}CuN_2O_4$: C, 53.51; H, 7.98; N, 6.93. Found: C, 48.56; H, 8.30; N, 6.28%.

1g, green; the vacuum pumping operation is repeated seven times and a green residue is obtained, which is triturated with ethanol and filtered. The solid is washed with water and diethyl ether. The estimated yield is 37%. The material is not analytically pure. *Anal.* Calc. for $C_{16}H_{28}CuN_2O_4$: C, 51.12; H, 7.51; N, 7.45. Found: C, 46.80; H, 6.86; N, 6.21%.

1h, pale green, washed with water, toluene and n-hexane. Yield 90%, m.p. 232–233 °C. *Anal.* Calc. for $C_{30}H_{24}CuN_2O_4$: C, 66.72; H, 4.48; N, 5.19. Found: C, 66.55; H, 4.45; N, 5.17%.

[Cu(benzoylacetanilidate·C_2N_2)$_2$] (2a)

1h (0.20 g, 0.37 mmol) is suspended in 3 cm^3 of a dichloroethane solution of cyanogen (*ca.* 0.5 M). The pale green suspension is kept at 40 °C, under stirring, for 30 min and the final beige suspension is filtered to give the product. Yield 85%, decomposition at *ca.* 200 °C. *Anal.* Calc. for $C_{34}H_{24}CuN_6O_4$: C, 63.40; H, 3.76; N, 13.05. Found: C, 62.84; H, 3.67; N, 12.93%. IR (nujol): 3300 (s, N–H), 2230 (vw, C≡N), 1620 (m, C=N).

[Cu(benzoylacetanilidate·PhCOCN)$_2$] (2b)

1h (0.23 g, 0.43 mmol) is allowed to react with benzoyl cyanide (0.11 g, 1 mmol) in deoxygenated dichloroethane (15 cm^3). The suspension is left at room temperature under stirring for 10 d, after which the unreacted **1h** is filtered off and the solution evaporated almost to dryness. The obtained green powder is filtered and washed with a little dichloroethane. Yield 40%, m.p. 235–237 °C. *Anal.* Calc. for $C_{46}H_{34}CuN_4O_6$: C, 68.86; H, 4.27; N, 6.98. Found: C, 68.25; H, 4.23; N, 6.98%. IR (nujol mull): 3340 and 3160 (m, N–H), 1670 (m, C=N).

X-ray Structure Analysis of 1b

Crystals of suitable size were obtained upon slow evaporation of an ethanol solution of **1b**. A selected crystal was mounted on a Philips PW 1100 four-circle diffractometer and cell constants were obtained from a least-squares fit of the setting angles of 25 reflections. A summary of crystal and intensity

TABLE I. Summary of Crystal and Intensity Collection Data for **1b**

Formula $C_{22}H_{24}CuN_2O_4$
Formula weight 443.98
Color sage green single crystals
Habit prismatic
Crystal dimensions 0.2 X 0.4 X 0.4 mm
Crystal system orthorhombic
Space group *Pbca* (No 61)
a 19.506(5) Å
b 11.901(4) Å
c 8.726(3) Å
V 2025.66 Å^3
Z 4
ρ(calc) 1.456 g cm^{-3}
Mo Kα from graphite monochromator (λ = 0.7107 Å)
Temperature 21 °C
Absorption coefficient 10.37 cm^{-1}
Diffractometer Philips PW 1100
2ϑ range $4° \leq 2\vartheta \leq 50°$
Scan technique $\vartheta - 2\vartheta$
Octants h, k, l
Total reflections collected 1784
Observed reflections ($I > 3\sigma(I)$) 915
$R = R_w$ 0.0484

TABLE II. Fractional Coordinates for **1b**[a]

Atom	*x/a*	*y/b*	*z/c*
Cu	0.0	0.0	0.0
O(1)	−0.0552(3)	0.8680(4)	0.0238(6)
O(2)	0.0389(3)	0.9872(5)	0.1999(6)
N(1)	−0.0870(4)	0.7007(6)	0.1200(8)
C(1)	0.0375(4)	0.8966(7)	0.2789(9)
C(2)	0.0004(5)	0.8021(6)	0.2485(9)
C(3)	−0.0472(4)	0.7931(7)	0.1273(9)
C(4)	0.0823(6)	0.9006(8)	0.4233(11)
C(5)	−0.1395(4)	0.6837(7)	0.0043(13)
C(6)	−0.2084(4)	0.6557(7)	0.0649(10)
C(7)	−0.2439(6)	0.5646(9)	−0.0021(17)
C(8)	−0.3115(6)	0.5420(9)	0.0544(15)
C(9)	−0.3391(6)	0.6033(11)	0.1710(15)
C(10)	−0.3038(6)	0.6922(10)	0.2339(14)
C(11)	−0.2389(6)	0.7184(8)	0.1809(13)
HC(2)	0.0086(71)	0.7431(120)	0.3177(159)
H(1)C(4)	0.1143(86)	0.9121(136)	0.3791(195)
H(2)C(4)	0.0667(64)	0.9393(103)	0.4955(156)
H(3)C(4)	0.0800(57)	0.8412(97)	0.4917(139)
HN(1)	−0.0706(47)	0.6682(78)	0.1703(108)
H(1)C(5)	−0.1263(40)	0.6277(66)	−0.0690(92)
H(2)C(5)	−0.1343(39)	0.7455(77)	−0.0605(92)
HC(7)	−0.2555(57)	0.5389(75)	0.0478(100)
HC(8)	−0.3521(70)	0.4750(116)	0.0276(155)
HC(9)	−0.4034(76)	0.5707(115)	0.1974(171)
HC(10)	−0.3293(43)	0.7366(89)	0.2942(105)
HC(11)	−0.2031(51)	0.7520(93)	0.2244(121)

[a]e.s.d.s given in parentheses.

collection data is given in Table I. A total of 1784 unique reflections (*hkl*) were recorded out to 2ϑ(Mo) = 50°. Intensity standards, recorded periodically, showed no fluctuations greater than 1%.

The structure was solved by the heavy atom method. The copper atom was placed on the origin and the relative Fourier map revealed the positions of all non-hydrogen atoms. These last ones were refined anisotropically, with the atomic scattering factors for Cu proposed in ref. 9. The final *R* factor ($\Sigma(|F_o| - |F_c|)/\Sigma|F_o|$) was 0.0484 and $w = 1$. The hydrogen atoms were located on a DF map and refined isotropically. The error in observation of unit weight was $S = \Sigma[w(|F_o| - |F_c|)^2]/(n - m)^{1/2} = 2.6$ with $n = 915$ and $m = 104$. In the last cycle of refinement, the shift for all parameters was less than 0.56. The final difference Fourier map showed no excursion of electron density greater than 0.5 e/Å^3. The final fractional atomic coordinates are listed in Table II.

Results and Discussion

The standard methods known to be useful for synthesized transition metal β-diketonate complexes [1] failed in the case of most of the β-ketoamides tested and utilized in this work. A rather peculiar method based on the aminolysis of copper ethyl acetoacetate has been proposed for the synthesis of **1a** and **1d** in medium to low yield [4a]. The classical procedure, implying the reaction of copper(II) salts with the ligand precursors in water/ethanol mixtures in alkaline medium, is successful only with **1e** and **1h**. In all other cases, all efforts gave either green-colored solutions or even no evidences of coordination reaction. In this connection, it has to be stressed that the β-ketoamides are known to form copper(II) complexes, whose formation constants are *ca.* two order of magnitudes smaller than those referring to their β-diketones analogs [10, 11]. Moreover, as pointed out above, the formation constants in dioxane/water mixtures are known to be markedly dependent on the acidity of the ligand precursors [2], being higher for less acidic β-ketoamides.

On the basis of all these findings, we developed a novel synthetic procedure by employing experimental conditions able to drive the reaction to completion (eqn. (1)).

$$M^{n+}(sol) + nAc^-(sol) + nHL \overset{K}{\rightleftharpoons} ML_n\downarrow + nHAc\uparrow \quad (1)$$

The equilibrium constant *K* can be easily calculated as a function of (i) the formation constant β_{ML_n}, (ii) the dissociation constant of acetic acid K_a, (iii) the dissociation constant of the ligand precursor K_{HL}, (iv) the solubility equilibrium constant of ML_n, K_s (all figures are intended to refer

TABLE III. Complexes [Cu(β-ketoamidate)$_2$][a] with some Physical Data

Complex	Yield (%)	Melting point (°C)	ν(N–H)	ν(C···O)	λ_{max} (lg ε)[b]	ν(N–H)[c]
1a	93	*ca.* 200 (dec.)	3500(s) 3300(s) 3200(m)	1610(s)	232(4.1), 273(4.2), 665(1.6)	3410(ms) 3350(w) 3280(w) 3180(ms)
1b	97	208–209	3360(vw) 3300(s) 3120(vw)	n.i.[d]	233(4.1), 277(4.3), 638(1.6)	3250(s) 3080)s)
1c	90	222–223	3300(ms) 3210(w) 3130(vw)	n.i.[d]	246(4.3), 295(4.5), 659(1.7)	3300(s) 3250(m) 3200(m) 3140(m) 3080(m)
1d	90	242–244	3440(m) 3390(m)	1610(m)	246(4.3), 302(4.5), 656(1.7)	3290(s)[e]
1e	89	*ca.* 200 (dec.)	3290(ms) 3190(vw) 3120(vw)	n.i.[d]	250(4.3), 298(4.7), 662(1.7)	3300(m) 3260(ms) 3200(m) 3130(m) 3080(mw)
1h	90	232–233	3300(ms)	1610(s)	245(4.8), 326(4.7), 655(1.9)	3300(m) 3260(m) 3200(m) 3140(mw) 3100(m)

[a]**1f** and **1g** were obtained not analytically pure, but their IR spectra indicate coordination of the relevant ligands. [b]Wavelength (nm) in methanol; logarithm of the extinction coefficient (M^{-1} cm^{-1}) in parentheses. [c]Ligand precursor. [d]Not identified owing to bands crowding. [e]Composite band.

to the particular solvent medium employed in the synthesis), according to the equation $K = (\beta_{ML_n})(K_{HL})^n/K_sK_a{}^n$. It results that K depends directly on the first power of β_{ML_n} (which decreases with increasing HL acidity) and on the n-th power of the acidity constant of HL. It is also evident that K increases with the decrease of the solubility of ML_n. One can therefore speculate that the success in the synthesis of ML_n may be greater (if any) upon using relatively acidic ligand precursors (if the related complexes are relatively little soluble), and, indeed, compound **1e** precipitates spontaneously upon mixing of the reagents. However, as a matter of fact, the continuous removal of acetic acid should be quite useful for driving to completion reaction (1), also if the balance of the various parameters, which influence the equilibrium constant, is not favourable to a reasonable yield.

On the basis of these arguments, we chose copper(II) as the metal centre and we succeeded in preparing complexes **1** by employing a 1/1 water–ethanol mixture, in which both $CuAc_2 \cdot H_2O$ and the β-ketoamides are expected to be at least partially soluble. The crucial artifice for driving reaction (1) to the right was, however, the continuous removal of the formed acetic acid under a dynamic vacuum. As an important aside, which outlines the essential correctness of the method employed, it should be noticed that the crude products were normally obtained analytically pure.

Complexes **1** are obtained as green microcrystalline powders, moderately soluble in polar organic solvents (e.g. methanol, dichloromethane, dimethylsulfoxide), where they are stable for days, at room temperature. The scope of the results is summarized in Table III.

The IR spectra of complexes **1** exhibit strong to medium intensity (generally multiple) sharp absorption bands (ν(N–H)) in the range 3400–3100 cm^{-1}. Both pattern and ranges are rather similar to those displayed by free ligand precursors (see Table III) in the solid state, the major differences being in a general 'simplification' of the pattern and in a more sharp shape of the absorption bands. On the contrary, a profound spectral change appears in the range 1750–1600 cm^{-1}, where free ligand precursors

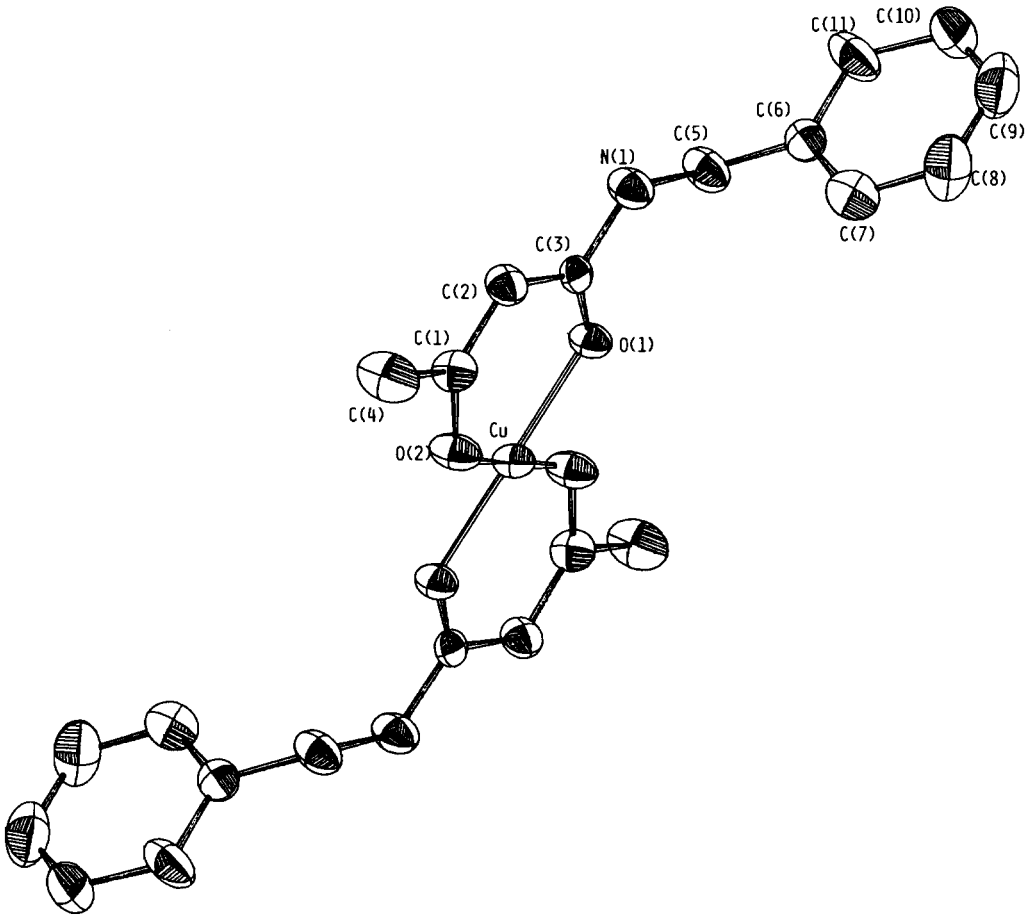

Fig. 1. Ortep drawing of the molecular structure of bis(1-*N*-benzylamino-1,3-butanedionate)copper(II) (**1b**).

TABLE IV. Selected Bond Lengths and Angles in the Structure of **1b**

Cu–O(1)	1.915(5)	C(1)–C(4)	1.533(13)
Cu–O(2)	1.909(5)	C(3)–N(1)	1.347(10)
O(1)–C(3)	1.279(9)	N(1)–C(5)	1.452(12)
C(3)–C(2)	1.411(12)	C(5)–C(6)	1.482(12)
C(2)–C(1)	1.363(12)	C(6)–C(7)	1.414(14)
O(2)–C(1)	1.280(10)		
O(1)–Cu–O(2)	93.4(2)	O(2)–C(1)–C(2)	126.9(8)
Cu–O(1)–C(3)	125.4(5)	O(2)–C(1)–C(4)	113.8(7)
Cu–O(2)–C(1)	123.4(5)	O(1)–C(3)–N(1)	117.7(7)
O(1)–C(3)–C(2)	123.8(7)	C(2)–C(3)–N(1)	118.5(7)
C(1)–C(2)–C(3)	124.0(7)	C(3)–N(1)–C(5)	123.6(7)
		N(1)–C(5)–C(6)	115.0(8)

exhibit strong ν(C=O) bands. In fact, for complexes **1** the highest wavenumbers do not trespass 1650 cm^{-1}, the main absoprtion in this region being centered at *ca.* 1550 cm^{-1} as a complex band envelope.

All these data are in full agreement [12] with the presence of copper–β-carbonylenolate rings in complexes **1**, which is confirmed by X-ray analysis.

The electronic spectra do not seem to deserve particular comments. They exhibit two typical bands in the UV region, which are also found in the spectrum of copper β-diketonate complexes and were attributed to π–π^* and d–π^* transitions. The same analogy is observed in the visible spectra, where a very broad (spanning over *ca.* 400 nm), seemingly composite, band appears.

X-ray Structure of [Cu(CH$_3$–CO=CH–CO–NH–CH$_2$C$_6$H$_5$)$_2$]

The crystal structure shows the presence of four independent molecules in the unit cell. The molecular structure is drawn in Fig. 1 and selected interatomic distances and angles are reported in Table IV.

Distinct monomeric entities {CuO_4} do not appreciably interact through Cu...O or Cu...N shorter distances, while an intermolecular N–H...O(2) ($-x$, $y - 1/2$, $1/2 - z$) interaction (N–O(2) distance = 3.132 Å) is detected. A previously reported intermolecular interaction between Cu^{II} and the methino carbon atom (seen in [Cu(acac)$_2$] [13] and in [Cu(eaa)$_2$] [14], eaa = 1-ethoxy-1,3-butanedionate) is not observed for **1b**.

TABLE V. Least-squares Planes and Deviations from Plane in the Structure of **1b**

Plane 1: $13.8100x + 1.1229y - 6.1073z = -0.1395$	
Cu	0.1395
O(1)	0.2065
O(2)	0.5644
C(1)	−0.0392
C(2)	−0.4720
C(3)	−0.3992
Plane 2: $-11.7692x - 0.9381y + 6.9246z = 0.0002$	
Cu	−0.0002
O(1)	0.0000
O(2)	0.0001
Plane 3: $-14.1767x + 3.8669y + 5.2805z = 4.4082$	
C(1)	0.0000
C(2)	0.0000
C(3)	0.0000
Plane 4: $-13.1251x + 5.2440y + 5.1851z = 5.4385$	
N(1)	0.0000
C(3)	0.0000
C(5)	0.0000
Plane 5: $7.7063x - 7.3763y + 5.9167z = -6.0627$	
C(6)	0.0041
C(7)	0.0061
C(8)	−0.0139
C(9)	0.0112
C(10)	−0.0004
C(11)	−0.0071
Angles between normals to planes	
plane 1–plane 2	171.90
plane 1–plane 3	155.15
plane 1–plane 4	148.29
plane 1–plane 5	104.68
plane 2–plane 3	26.73
plane 2–plane 4	32.56
plane 2–plane 5	69.60
plane 3–plane 4	7.35
plane 3–plane 5	94.49
plane 4–plane 5	97.82

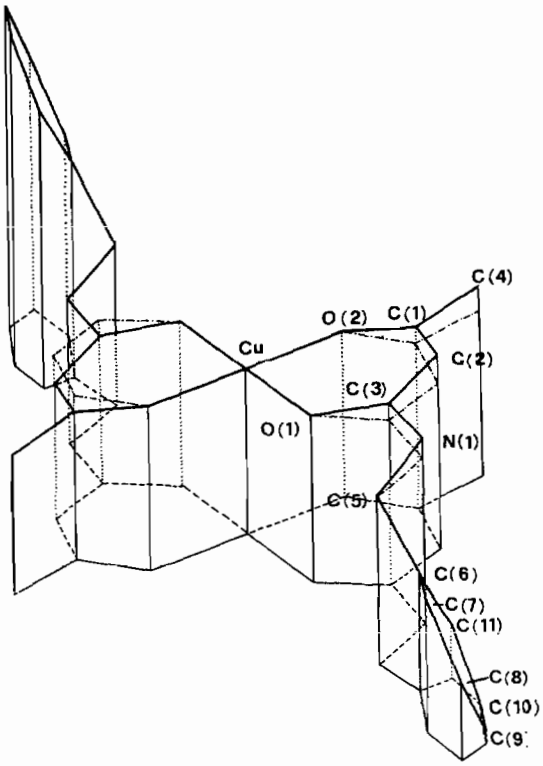

Fig. 2. Assonometric view of the molecular structure of **1b**.

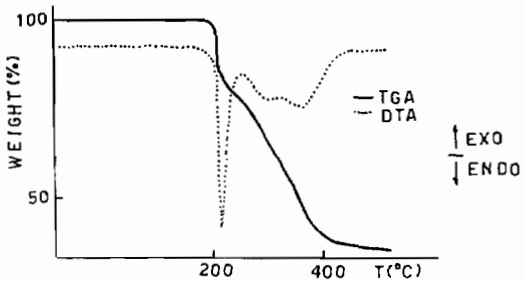

Fig. 3. TG-DTA for **1b** (Ar flux rate, 250 ml min^{-1}; reference material, Al_2O_3; heating rate, 5 °C min^{-1}) under Ar.

The $\{CuO_4\}$ moiety is centrosymmetric, planar, and almost perfectly square (Table V). The CuO(1)O(2) and C(1)C(2)C(3) planes form an angle of 26.73°, which can be related to the value 13.6° observed for $[Cu(acac)_2]$ [13]. The Cu–O distances are very similar in both cases. An assonometric view of the molecular structure of **1b** is depicted in Fig. 2.

Further comparison of bond lengths and angles does not seem to be possible owing to the marked difference in the accuracy of the molecular data here reported with that relative to the structure of $[Cu(acac)_2]$ and $[Cu(eaa)_2]$.

Thermal Behavior and Mass Spectrometry

All complexes **1** were examined by simultaneous TG and DTA measurements (Fig. 3). They all appear to be thermally quite stable under argon up to *ca.* 200 °C and do not exhibit appreciable volatility before decomposition.

It is also noteworthy that all complexes **1** melt in a narrow temperature range around 200 °C (*i.e. ca.* ±10 °C), irrespectively of the nature of the rather different substituents R^1, R^2.

In view of the lack of knowledge on the mass spectral behavior of β-ketoamidate complexes, we report here a little information on the mass spectrum of **1b** (Table VI).

The spectrum resembles that of $[Cu(acac)_2]$ [15], particularly with reference to the presence of the $[Cu(\beta\text{-ketoenolate})H]^+$ species, which appears to be a remarkable feature of the analyte.

TABLE 3. ^{1}H NMR Data for the Macrocyclic Dioxomolybdenum(VI) Complexes[a]

Complex	Ethyl		Aromatic			Methine	
	$-CH_3$	$-CH_2-$	$-H_c$	$-H_d$	$-H_e$	$-H_a$	$-H_b$
MoO_2(1-E)	1.52(t) (J = 7.5 Hz)	3.16(q) (J = 7.5 Hz)	8.34(dd) (J = 5.0 Hz) (J = 1.3 Hz)	7.22(dd) (J = 7.9 Hz) (J = 5.0 Hz)	8.08(dd) (J = 7.9 Hz) (J = 1.3 Hz)	10.06(s)	9.24(s)
MoO_2(1-Z)	1.51(t) (J = 7.5 Hz) 1.54(t) (J = 7.5 Hz)	3.13(q) (J = 7.5 Hz) 3.21(q) (J = 7.5 Hz)	8.35(dd) (J = 4.6 Hz) (J = 1.5 Hz)	7.25(dd) (J = 8.3 Hz) (J = 4.6 Hz)	8.09(dd) (J = 8.3 Hz) (J = 1.5 Hz)	10.11(s)	9.22(s)

[a]Chemical shifts are given in ppm for TMS as an internal reference. Measured in chloroform-d. Multiplicity of a proton signal is given in parentheses after δ values: s = singlet; t = triplet; q = quartet; dd = doublet of doublets.

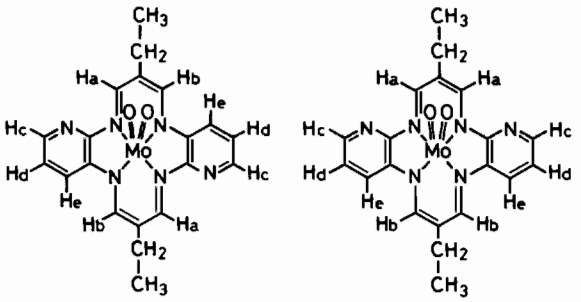

MoO_2(1-E) MoO_2(1-Z)

chromium(IV) complexes. Accordingly the large downfield shift for the dioxomolybdenum complexes is explained on the basis of above deshielding effect. The signals for the aromatic H_c-, H_d- and H_e-protons are shifted downfield by 0.47–0.84 ppm and the signals for the methyl and methylene protons of the 7- and 16-ethyl groups are also shifted downfield by 0.38–0.96 ppm upon dioxomolybdenum(VI) complex formation. Being also larger than that observed for the nickel(II) and the oxochromium(IV) complexes, the magnitude of the downfield shifts for the aromatic, methyl and methylene protons is much smaller than that obtained for the methine protons. This is mainly attributed to the fact that the aromatic, methyl and methylene proton groups are placed further from the positive charge of the molybdenum(VI) ion which affords the deshielding effect.

References

1 (a) H. Hiller, P. Dimroth and H. Pfitzner, *Liebigs Ann. Chem., 717* (1968) 137; (b) E.-G. Jaeger, *Z. Anorg. Allg. Chem., 364* (1969) 177; (c) V. L. Goedken, J. Molim-Case and Y.-A. Whang, *J. Chem. Soc., Chem. Commun.*, (1973) 337; (d) F. A. L'Eplattenier and A. Pugin, *Helv. Chim. Acta, 58* (1975) 917; (e) V. L. Goedken and V.-A. Park, *J. Chem. Soc., Chem. Commun.*, (1975) 214; (f) M. C. Weiss, B. Bursten, S. Peng and V. L. Goedken, *J. Am. Chem. Soc., 98* (1976) 8021; (g) D. R. Neves and J. C. Dabrowiak, *Inorg. Chem., 15* (1976) 129; (h) M. C. Weiss, G. Gordon and V. L. Goedken, *Inorg. Chem., 16* (1977) 305; (i) A. Pezeshk, F. T. Greenaway and G. Vincow, *Inorg. Chem., 17* (1978) 3421; (j) Y. Nishida, A. Sumita, K. Hayashida, H. Ohshima, S. Kida and Y. Maeda, *J. Coord. Chem., 9* (1979) 161; (k) P. W. DeHaven and V. L. Goedken, *Inorg. Chem., 18* (1979) 827; (m) J. C. Dabrowiak, D. P. Fisher, F. C. McElroy and D. J. Macero, *Inorg. Chem., 18* (1979) 2304; (n) K. Sakata, M. Hashimoto, N. Tagami and Y. Murakami, *Bull. Chem. Soc. Jpn., 53* (1980) 2262; (o) V. L. Goedken and J. A. Ladd, *J. Chem. Soc., Chem. Commun.*, (1982) 142; (p) K. Sakata, H. Nakamura and M. Hashimoto, *Inorg. Chim. Acta, 83* (1984) L67; (q) V. L. Goedken, H. Ito and T. Ito, *J. Chem. Soc., Chem. Commun.*, (1984) 1453; (r) K. Sakata, M. Hashimoto and T. Naganawa, *Inorg. Chim. Acta, 98* (1985) L11; (s) K. Sakata, M. Hashimoto and H. Yoshino, *Inorg. Chim. Acta, 99* (1985) 231; (t) K. Sakata, Y. Hayashida, M. Hashimoto, K. Terada and K. Kato, *Inorg. Chim. Acta, 105* (1985) L25; (u) A. R. Cutler, C. S. Alleyne and D. Dolphin, *Inorg. Chem., 24* (1985) 2276; (v) S. Ciurli, E. M. Meyer, C. Floriani, A. Chiesi-Villa and C. Guastini, *J. Chem. Soc., Chem. Commun.*, (1987) 281; (w) K. Sakata, Y. Hayashida, S. Yanagida, M. Hashimoto and Y. Kato, *Inorg. Chim. Acta, 134* (1987) 269; (x) K. Sakata, T. Naganawa, M. Hashimoto, H. I. Ogawa and Y. Kato, *Inorg. Chim. Acta, 143* (1988) 251; (y) E. Sister, V. Gottfried, M. Kapon, M. Kaftory, Z. Dori and H. B. Gray, *Inorg. Chem., 27* (1988) 600; (z) K. Sakata, T. Kikutake, Y. Shigaki, M. Hashimoto, H. I. Ogawa and Y. Kato, *Inorg. Chim. Acta, 144* (1988) 1.

2 L. G. Bell and J. C. Dabrowiak, *J. Chem. Soc., Chem. Commun.*, (1975) 512.

3 D. Mandon, J.-M. Giraudon, L. Toupet, J. Sala-Pala and J. E. Guerchais, *J. Am. Chem. Soc., 109* (1987) 3490.

4 D. J. Darensbourg and R. L. Kump, *Inorg. Chem., 17* (1978) 2680.

5 J. G. Erdman, V. G. Ramsey, N. W. Kalenda and W. H. Hanson, *J. Am. Chem. Soc., 78* (1956) 5844.

6 J. M. Assour, J. Goldmacher and S. E. Harrison, *J. Chem. Phys., 43* (1965) 159.

7 K. Nakamoto, *Infrared and Raman Spectra of Inorganic and Coordination Compounds*, Wiley, New York, 3rd edn., 1978, p. 249.

8 P. C. H. Mitchell, *Quart. Rev., 20* (1966) 103.

9 W. P. Griffith and T. D. Wickins, *J. Chem. Soc. A* (1968) 400.

10 K. Yamanouchi and S. Yamada, *Inorg. Chim. Acta, 9* (1974) 83.

11 K. Yamanouchi and S. Yamada, *Inorg. Chim. Acta, 9* (1974) 161.