(No Model.) 5 Sheets—Sheet 1.

C. C. MOORE.

ADDING MACHINE.

No. 383,973. Patented June 5, 1888.

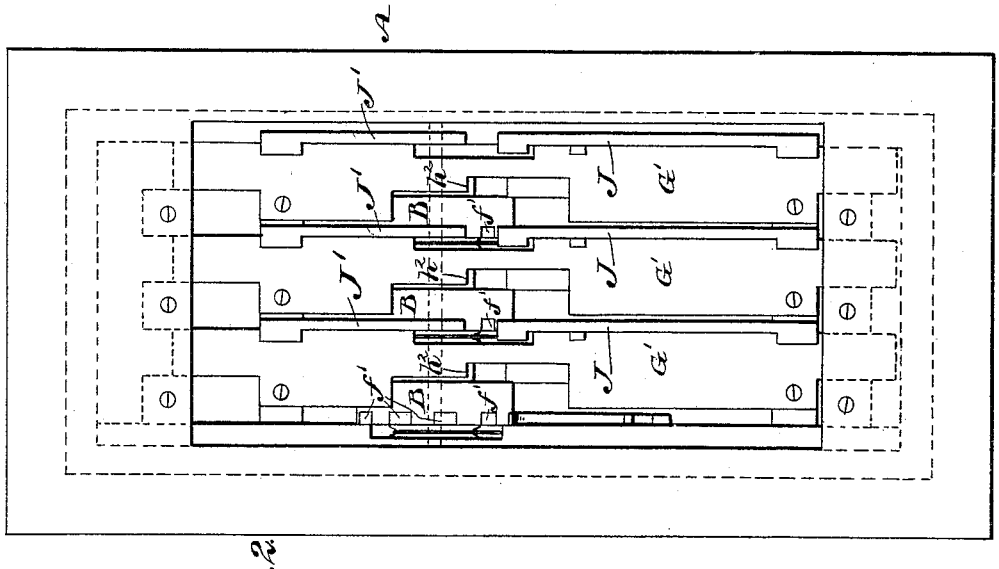

Fig. 2.

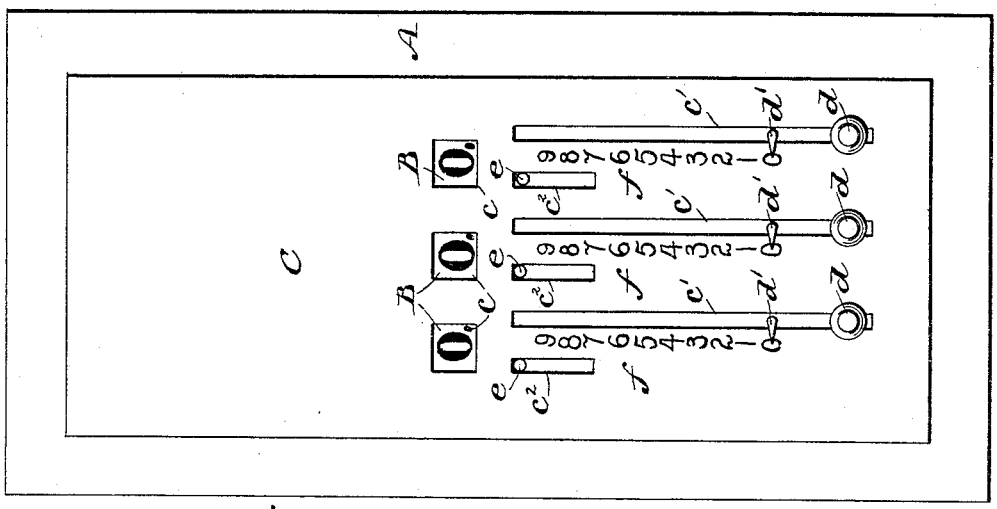

Fig. 1.

WITNESSES:

E. Sedgwick.

INVENTOR:

C. C. Moore.

BY Munn & Co.

ATTORNEYS.

N. PETERS, Photo-Lithographer, Washington, D. C.

(No Model.) 5 Sheets—Sheet 2.

C. C. MOORE.

ADDING MACHINE.

No. 383,973. Patented June 5, 1888.

Fig. 3.

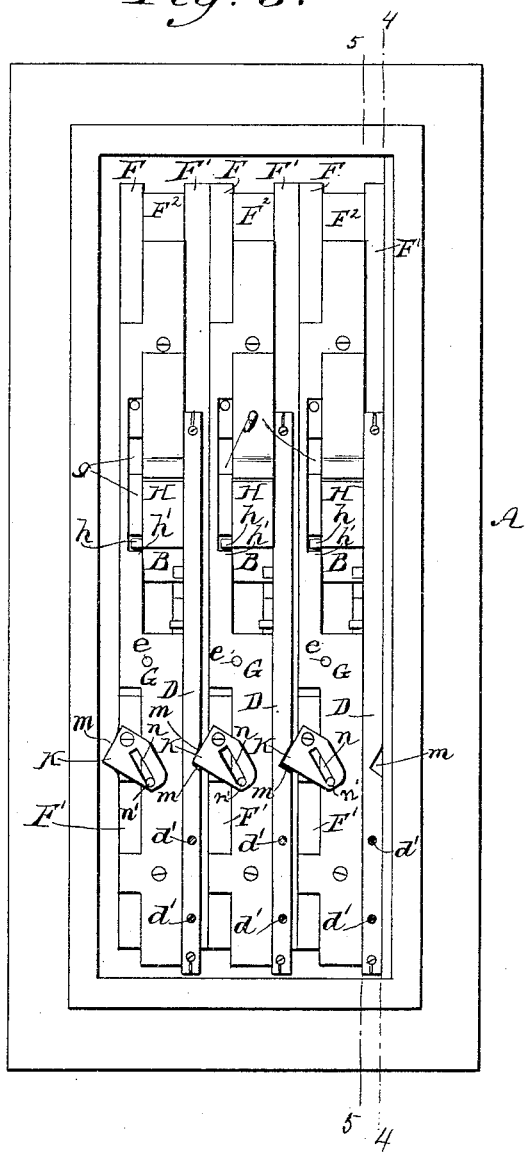

WITNESSES:

John W. Deemer

C. Sedgwick.

INVENTOR:

C. C. Moore

BY Munn & Co.

ATTORNEYS.

N. PETERS, Photo-Lithographer, Washington, D. C.

(No Model.) 5 Sheets—Sheet 3.

C. C. MOORE.

ADDING MACHINE.

No. 383,973. Patented June 5, 1888.

Fig. 4.

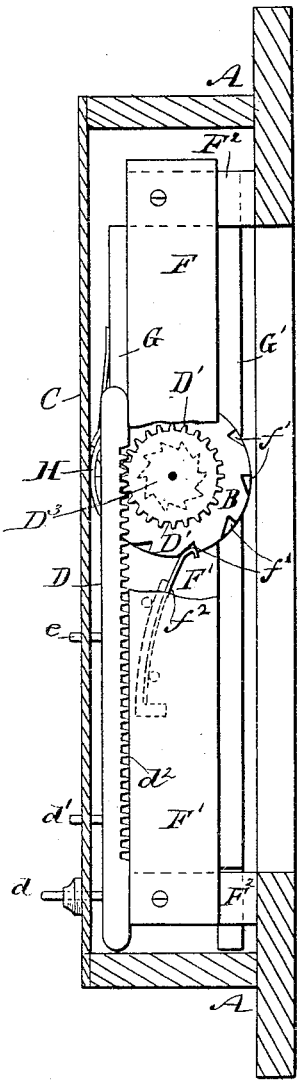

Fig. 5.

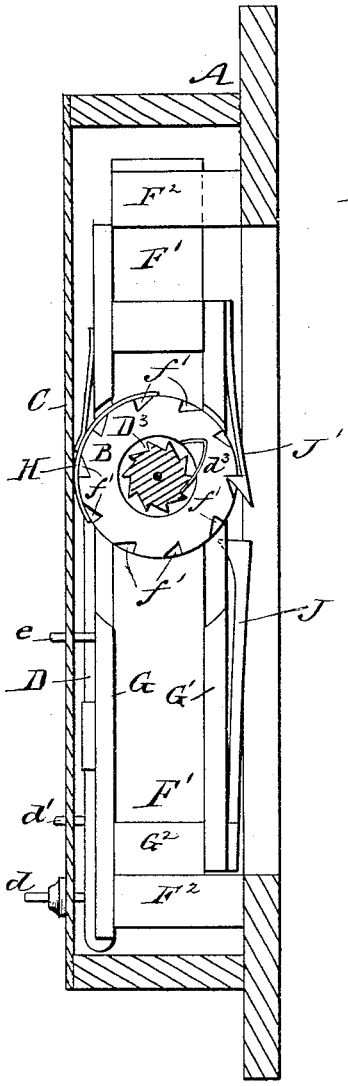

Fig. 6.

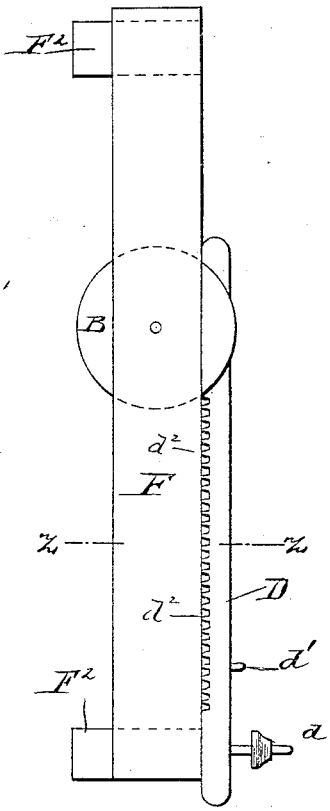

WITNESSES:

John W. Heemer

C. Sedgwick

INVENTOR:

C. C. Moore

BY Munn & Co.

ATTORNEYS.

N. PETERS, Photo-Lithographer, Washington, D. C.

(No Model.) 5 Sheets—Sheet 4.

C. C. MOORE.

ADDING MACHINE.

No. 383,973. Patented June 5, 1888.

Fig. 7. Fig. 8. Fig. 9.

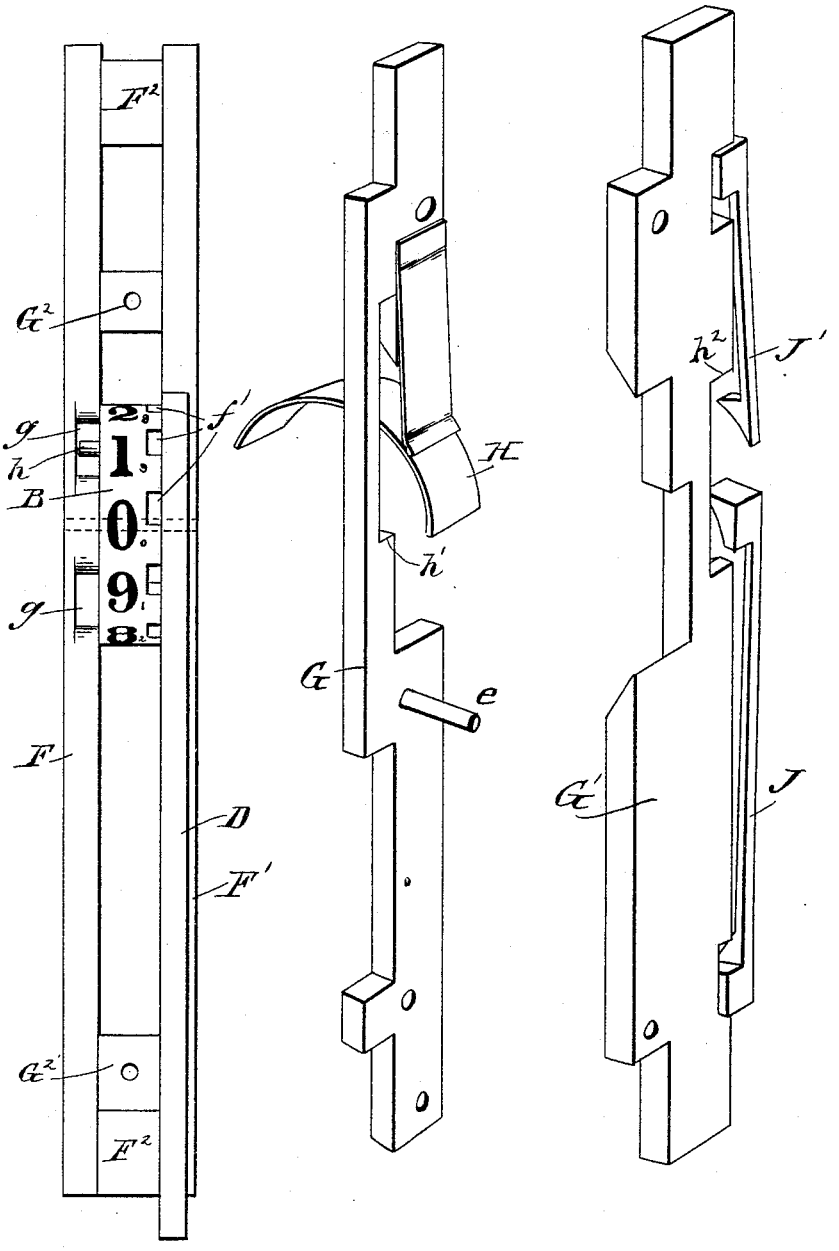

WITNESSES:

John Wedderburn

C. Sedgwick.

INVENTOR:

C. C. Moore.

BY Munn & Co

ATTORNEYS.

N. PETERS, Photo-Lithographer, Washington, D. C.

(No Model.) 5 Sheets—Sheet 5.

C. C. MOORE.

ADDING MACHINE.

No. 383,973. Patented June 5, 1888.

Fig. 10.

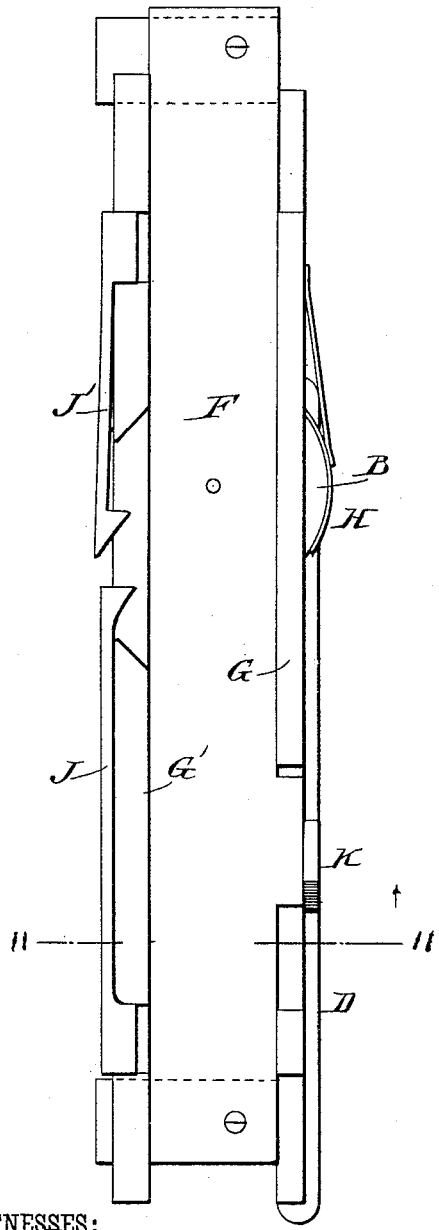

Fig. 11.

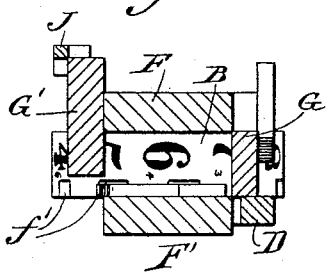

WITNESSES:

Johnell O. Deemer

C. Sedgwick

INVENTOR:

C. C. Moore

BY Munn & Co

ATTORNEYS.

N. PETERS, Photo-Lithographer, Washington, D. C.

UNITED STATES PATENT OFFICE.

CHARLES C. MOORE, OF NEW YORK, N. Y., ASSIGNOR TO JACOB B. MOORE, OF SAME PLACE.

ADDING-MACHINE.

SPECIFICATION forming part of Letters Patent No. 383,973, dated June 5, 1888.

Application filed August 18, 1887. Serial No. 247,273. (No model.)

To all whom it may concern:

Be it known that I, CHARLES C. MOORE, of the city, county, and State of New York, have invented a new and Improved Adding-Machine, of which the following is a full, clear, and exact description.

Reference is to be had to the accompanying drawings, forming a part of this specification, in which similar letters of reference indicate corresponding parts in all the figures.

Figure 1 is a front elevation of my new adding-machine, showing only the units, tens, and hundreds columns, and showing the position of the parts when the disks and pointers stand at 0. Fig. 2 is a rear elevation of the machine. Fig. 3 is a front elevation of the machine with the front plate removed. Fig. 4 is a vertical sectional elevation taken on the line 4 4 of Fig. 3. Fig. 5 is a similar view taken on the line 5 5 of Fig. 3. Fig. 6 is a side elevation of one of the frames and the numbering-disk and the rack for operating said disk. Fig. 7 is a front elevation of the same. Fig. 8 is a perspective view of one of the front plates and apron attached thereto. Fig. 9 is a perspective view of one of the back plates. Fig. 10 is a side elevation of one of the complete counting-frames removed from the main casing, and Fig. 11 is a transverse sectional elevation of the same taken on the line 11 11, Fig. 10, looking toward the top of the figure.

The invention will first be described in connection with the drawings, and then pointed out in the claims.

A represents the main frame, in which the numbering-disks B B and other working parts of the machine are held. At the front of the machine is held the plate C, in which are formed the openings *c c*, in which the numbers of the numbering-disks B appear. Said plate is also formed with the long slots *c'* and short slots c^2. In each of the slots *c'* work a rack-pin, *d*, and pointer *d'*, both connected to a rack, D, (see Fig. 4,) arranged back of the plate C in line with the slots *c'*, for turning the numbering-disks B by any suitable connections thereto. In each of the short slots c^2 works a thumb-pin, *e*, screwed into or otherwise fastened to the plate G, each for operating a carrier, hereinafter described, for adding one to its respective adjoining left-hand numbering-disk. Adjacent to each slot *c'* is formed upon the face of the plate C a scale, *f*, of consecutive numbers from 0 to 9, as shown in Fig. 1. In connection with this index each rack D is operated longitudinally for turning the disks B, the pointers *d* indicating on the scales the distance of movement necessary to bring the required number into the openings *c*.

By Figs. 4 and 5 it will be seen that each rack D is connected to its respective numbering-disk B by the teeth d^2 of the rack meshing with a pinion, D', made fast to the ratchet-wheel D^2, and together placed loosely upon the axis of the disk, which is recessed sufficiently to admit the turning of the ratchet-wheel therein. Upon the downward movement of the rack D the pinion D' is locked to the disk B by the pawl or click d^3, fixed upon and within the recess of the disk and acting on the said ratchet-wheel. It will be seen that the rack D in its upward movement turns the united pinion and ratchet-wheel backward freely without engaging the disk, the pawl or click d^3 of the ratchet only acting in the forward movement of ratchet-wheel D^2 to lock the ratchet-disks together, which is caused by the downward movement of the rack, as before described. The ratchet-wheel has ten notches or teeth acted upon by the pawl d^3 to correspond with the ten notches *f'* upon the edge of the disk, and a pawl, f^2, prevents backward movement of the disk.

Each numbering-disk B is journaled in a frame composed of the side plates, F F', separated by end blocks, F^2. The rack D runs upon the edge of the side plate F'. The opposite side plate, F, is cut away, as shown at *g*, Fig. 7, to form a clearance for the pin *h* in the adjacent side of the numbering-disk. Upon the front edges of the side plates, F F', is held the plate G, and upon their rear edges the plate G' These two plates are united by the blocks G^2 at the ends, which are adapted to move freely between the side plates, F F', so that the plates G G' may have independent longitudinal movement upon the frame composed of the said plates F F' and blocks F^2. The plates G are each provided with an apron,

H, adapted to cover the front edge of its respective numbering-disk B when the plates G G′ are in their lowermost position, as shown in Fig. 5. When the said plates are elevated, said aprons are carried above the openings *c*, so that the numbers in front on the disks can be seen. The plates G G′ are moved longitudinally by the pins *h* in the numbering-disks, said pins being arranged to strike the shoulder *h′* of the plate G, as seen in Fig. 3, to effect the downward movement, and the shoulder h^2, Fig. 2, of the plate G′ to effect the upward movement, if said upward movement should not have been effected by the upward movement of the thumb-pin *e*. (See Figs. 2 and 3.)

The plate G′ carries the two pawls J J′, which are offset at one side of the plates and arranged to engage the notches *f′* of the adjacent left-hand numbering-disk B, so that with each upward movement of the plates G G′ the pawl J serves to communicate motion to the neighboring left-hand numbering-disk for carrying the tens. The pawl J′ is a friction-pawl to prevent the plates G G′ from dropping down of their own weight, said pawl simply pressing against the numbering-disk when said plates are lifted to the highest point, as shown in Fig. 5.

To the front edge of each of the side plates F is pivoted a locking-pawl, K, for locking the adjacent rack D, the said pawls being adapted to enter notches *m* in the said racks, as shown in Fig. 3. The said locking-pawls are diagonally slotted, as shown at *n*, and a small pin, *n′*, attached to the plates G, works in said slot, so that the upward movement of the plates G will swing the locking-pawls K out of the notches *m*, and thus release the racks D. The downward movement of the plates G will swing the said pawls back into the said notches and again lock the racks from upward movement.

The above description is that of a frame composed of the side plates, F F′, and of the ends blocks, F^2, and containing the numbering-disk B, the rack D and its connections with said disk B, and the front and rear plates, G G′. As many of these frames as desired may be placed together side by side in one casing, so that practically there is no limit to the scope of the machine as a whole, and by means of the pawls J, lapping over to each left-hand numbering-disk, positive motion may be communicated from one complete frame to all of the left-hand numbering-disks, so that no matter how extended the machine may be, the carrying from one disk to the other will be as perfect at the extreme left of the machine as at the first or second column.

Addition upon this machine may be commenced at either figure of the sum desired to be put on the machine. For example, to commence with 375, add 5 first by the units-rack, 7 by the tens-rack, and 3 by the hundreds-rack, or, vice versa, add 3 first on the hundreds-rack, then 7 on the tens-rack, then 5 on the units-rack; or even add 7 on the tens-rack first, thus commencing anywhere, but with care that the figures are put on by their respective rack—namely, the units by the units-rack, the tens by the tens-rack, the hundreds by the hundreds-rack, the thousands by the thousands-rack, and so on indefinitely.

Referring to Fig. 1, it will be seen that 0 appears in the openings *c c* and when 0 is so shown in all the openings *c c*, and the pointers *d′* at 0 in the scales *f*, the machine is "clear" (of all sums) and ready for operation. The operation is simply pushing up respectively the rack-pin *d* until the pointer *d′* (from 0) reaches (in the scale *f*) the figure desired, and then drawing down said rack-pin until the pointer is back again at 0. For example, in 375 to commence (at the left of the sum) with 3 first, push up the hundreds-rack pin *d* until the pointer *d′* reaches 3 on the scale *f*, and then draw the said rack-pin downward until the pointer is back again at 0. This will cause the hundreds-rack D to turn the hundreds numbering-disk B, so that the figure 3, with its complemental figure, (described hereinafter,) will be seen at the hundreds-opening *c*. Next push up the tens-rack pin *d* until its pointer *d′* reaches 7 in its scale *f*, and then draw said rack-pin downward until the pointer is back again at 0. This will in like manner turn the tens-disk B and cause 7 (with its complemental figure) to appear at the tens-opening *c*. Next push up the units-rack pin *d* until its pointer *d′* reaches 5, and then draw said rack-pin downward until its pointer is back again at 0, which will cause the units-rack D to turn the units-disk B and bring 5 (with its complemental figure) to the units-opening *c*. Now in the openings the figures appear thus: 3_7 7_3 5_5. The small figures are the complemental figures, to be used in "clearing" the machine when desirable by simply adding them (the small figures) on the machine by their respective racks. If, for example, it should now be desired to add 19 to the number 375, the tens-rack pin would be pushed up until the pointer indicates 1, and then drawn down until the pointer is back again at 0. This would turn the tens-disk B one notch, and 8 (with its complemental figure) would appear in the tens-opening *c*. Then the units-rack pin must be pushed up until the pointer indicates 9, and then drawn down, as before, to 0. This will bring 4 (with its complemental figure) in the units place, and at the same time will cause the pin *h* in the side of the units numbering-disk to strike the shoulder *h′* of the plate G and force said plate and the back plate, G′, with the pawls J J′, downward. This will lower the apron H over the units-opening *c*, so that the number 4 and its complemental figure therein cannot be seen. It will also cause the pawl J to enter a lower notch, *f″*, in the tens numbering-disk, and it will also cause the pawl K to enter the notch *m* and lock the tens-rack from upward movement. If the operator wishes to know the number

now concealed in the units-opening, he must push up the units thumb-pin *e*, secured to the plate G, to the top of the slot e^2, which of course has been drawn down therefrom to the bottom of said slot by the downward movement of the plates G G'. This will cause the plates G G' to move upward, releasing the lock K upon the tens-rack D, also causing the units-pawl J to turn the tens-disk one notch, bringing 9 into the tens-opening, and thus adding one to the tens-disk, at the same time lifting the apron H from the units opening, revealing the figure 4 and its complemental figure 6, which were there concealed. In case the operator should neglect to push up the thumb-pin *e*, adding could still be continued by the units-rack, the revolution of the units numbering-disk causing the pin *h* thereof to come against the shoulder h^2 and push up the plates G G', so the tens-rack would be unlocked, the units-apron lifted, and by the units-pawl J one would be added to the tens numbering-disk automatically.

When an apron H covers any of the openings *e*, the thumb-pin is always at the bottom of the slot. Pushing the pin up to the top of the slot adds one to the next adjoining disk; but until said thumb-pin on the right is pushed up, the rack of the disk next adjoining is locked, and no addition by that rack can be effected, so the proper carrying to the adjoining disk must be accomplished (by the thumb-pin *e* or by the automatic action of the machine) before any addition can be had thereupon. The thumb-pin is never to be pulled down by the hand, the downward movement of the pin being exclusively the work of the machine; but it may be pushed up by the thumb at any time without interfering with the addition going on by its respective rack and disk.

In the example of the addition of 375 and 19 the result is shown in the opening *c c* 3, 9, 4_c. Now, to clear the machine, if no further amount is to be added to 394, add the small (complemental) figure in the openings each by its respective rack, but always in "clearing" commencing at the right hand—*i. e.*, the units-column. For instance, having to clear the machine of the sum of 394, add the complemental figure 6 by the units-rack. This will bring down the apron and thumb-pin, which pin being pushed up 0 (and complemental figure) appear in the units-opening, and 1 having been added to 9 in the next opening the apron and thumb-pin of the tens-column will be brought down. Push up the tens thumb-pin and 0 appears in the tens-opening and 1 is carried to 3, and 4 will appear in the hundreds-opening. Now add the 6 by the hundreds-rack and the apron and thumb-pin of the hundreds-column will be brought down. Finally, pushing up the hundreds thumb-pin will show the openings clear, (0_c 0_c 0_c.)

A special feature of this machine is that it has an "apparent carrying" and an "actual carrying." The apparent carrying is when at the instant a 10 of any disk has arrived at an opening the plates G G', &c., are moved downward automatically, covering said opening and concealing the figures therein by an apron, and at the same time locking the adjoining disk-rack. The actual carrying is when by the thumb-pin, or automatically by the revolution of the disk, the plates G G', &c., are moved upward, lifting the apron from the opening to show the figures therein, unlocking the adjoining disk-rack, and by the pawl J now actually adding one to the adjoining left-hand numbering-disk. Between the downward and the upward movement of said plates G G', &c., the actual carrying is thus interrupted by a period of rest, which may continue even to the instant before another one on the same disk is to be carried. This principle of a period of rest or deferred action between an apparent and the actual carrying is believed to be new in adding-machines, and in the invention and construction of this machine has been especially studied with a view to avoid the serious obstacle in other machines known and commonly termed as "the nine holes"—*i. e.*, for example, to add 1 to 99,999 to produce and show 100,000. In other machines to produce this result six sets of wheels, levers, slides, springs, bearings, or other items of machinery must be in action at the same instant, thus causing great friction and a continual loss of power in the motion communicated from right to left, until at the extreme left the carrying is barely, if ever, accomplished, therefore limiting said machine in its power to that point. By the principle of deferred action or period of rest it is plainly evident that in this machine no such friction or any loss of power whatever can occur, and an indefinite number of frames with the disks, &c., side by side may be operated from one end to the other without fear of the nine holes or any other obstacle—that is to say, for example, the 50th or the 50000th of a row of numbering-disks in their frames could be operated in the same way as the units or any other column and just as easily, without any possible failure in carrying. Therefore this machine may be said to be unlimited in its power to any point of numeration possible.

Having thus described my invention, what I claim as new, and desire to secure by Letters Patent, is—

1. In an adding device, the combination, with a numbering-disk and rack for turning the same, of sliding plates operated by the said numbering-disk, and a second numbering-disk also operated by the sliding plates for carrying the tens, substantially as described.

2. The side plates, F F', plate G, apron H, plate G', and pawl J, in combination with the numbering-disk B and the operating-bar D, substantially as described.

3. The side plates, F F', numbering-disk B, bar D, plates G G', constructed to be moved

longitudinally by the disk B and the pawl J, in combination with another frame carrying similar parts, the pawl J engaging with the next adjoining numbering-disk, substantially as described.

4. In a numbering device, the numbering-disk B, provided with a side pin, *h*, and means for revolving the disk, in combination with the side plates, F F′, and the plates G G′, the latter provided with a pawl, J, said plates G G′ being formed, respectively, with shoulders *h′* *h²* to receive the impact of the said pin *h* for reciprocating the plates G G′, substantially as and for the purposes set forth.

5. The side plate, F, provided with a locking-pawl, K, in combination with the numbering-disk, the operating-bar D, for revolving the same and notched for receiving the locking-pawl, and the united plates G G′, the plate G being provided with a pin, *n′*, for operating the pawl K, substantially as described.

6. The sliding bars D, notched at *m*, in combination with the numbering-disks, the plates G G′, the pivoted locking-pawls K, and pins *n′*, attached to the plates G and entering a diagonal slot in the said locking-pawls, substantially as described.

7. In a numbering-machine, the combination, with the numbering-disks, the bars D, for turning the same, the ratchet-wheel and ratchet and pawl for locking the disks from backward movement, the sliding plates G G′, and the disks B, provided with the pins *h*, for reciprocating the plates G G′, of the pawls J and the apron H, substantially as described.

8. In a numbering-machine, the combination, with the numbering-disks, the bars D, for turning the same, the ratchet-wheel and ratchet and pawl for locking the disks from backward movement, the sliding plates G G′, and pins *h*, for reciprocating the plates G G′, of the pawls J, for communicating motion to the neighboring numbering-disks, and the locking-pawls K, for locking the bars D, substantially as described.

CHARLES C. MOORE.

Witnesses:
H. A. WEST,
C. SEDGWICK.