US0D1076809S

(12) United States Design Patent

Cai et al.

(10) Patent No.: US D1,076,809 S
(45) Date of Patent: ** May 27, 2025

(54) **POWER SUPPLY**

(71) Applicant: **Energywave Technology Inc.**, Xi'an (CN)

(72) Inventors: **Liwei Cai**, Shaanxi (CN); **Yuemei Qi**, Shaanxi (CN); **Haiyan Ji**, Shaanxi (CN); **Xingxu Zhang**, Shaanxi (CN)

(**) Term: **15 Years**

(21) Appl. No.: **35/520,522**

(22) Filed: **Apr. 11, 2023**

(80) **Hague Agreement Data**

Int. Filing Date: **Apr. 11, 2023**
Int. Reg. No.: **DM/228425**
Int. Reg. Date: **Apr. 11, 2023**
Int. Reg. Pub. Date: **Apr. 12, 2024**

(51) **LOC (15) Cl.** **13-02**

(52) **U.S. Cl.**
USPC **D13/110**

(58) **Field of Classification Search**
USPC D13/107, 108, 110, 133, 184, 199
CPC B60L 53/10; B60L 53/16; B60L 53/18; H02J 7/00; H02J 7/02; H02J 7/025; H02J 7/0013; H02J 7/0042; H02J 7/0044; H02J 7/0045; H02J 50/005; H02J 50/10; H05K 5/02; H05K 5/0217; H05K 5/0247
See application file for complete search history.

(56) **References Cited**

U.S. PATENT DOCUMENTS

D897,284 S * 9/2020 Sun D13/103
D916,655 S * 4/2021 Fang D13/103
D961,503 S * 8/2022 Fu D13/107
D983,745 S * 4/2023 Hu D13/110
D991,176 S * 7/2023 You D13/110
D991,879 S * 7/2023 Chen D13/107
D993,179 S * 7/2023 Wang D13/110
D995,418 S * 8/2023 Xiong D13/107
D995,428 S * 8/2023 Zhang D13/110
D999,733 S * 9/2023 Wu D13/107
D1,003,239 S * 10/2023 Mo D13/110
D1,003,240 S * 10/2023 Mo D13/110
D1,003,824 S * 11/2023 Wang D13/103
D1,005,237 S * 11/2023 Luo D13/110
D1,007,421 S * 12/2023 Wang D13/110
D1,008,165 S * 12/2023 Liu D13/110
D1,011,292 S * 1/2024 Sun D13/110
D1,012,024 S * 1/2024 Lin D13/110
D1,012,849 S * 1/2024 Liang D13/110
D1,012,850 S * 1/2024 Chen D13/110
D1,015,268 S * 2/2024 Tong D13/107
D1,019,561 S * 3/2024 Gong D13/110
D1,023,952 S * 4/2024 Luo D13/110
D1,024,939 S * 4/2024 Tong D13/107
D1,025,908 S * 5/2024 Zhang D13/110
(Continued)

Primary Examiner — Christy Nemeth

(57) **CLAIM**

The ornamental design for a power supply as shown and described.

DESCRIPTION

1. Power supply
1.1 : Perspective
1.2 : Perspective
1.3 : Front
1.4 : Back
1.5 : Left
1.6 : Right
1.7 : Top
1.8 : Bottom

1.1 is a front perspective view of a power supply showing our new design; **1.2** is a rear perspective view thereof; **1.3** is a front view thereof; **1.4** is a back view thereof; **1.5** is a left side view thereof; **1.6** is a right side view thereof; **1.7** is a top view thereof; **1.8** is a bottom view thereof. The broken lines in the figures illustrate portions of the article that form no part of the claimed design.

1 Claim, 8 Drawing Sheets

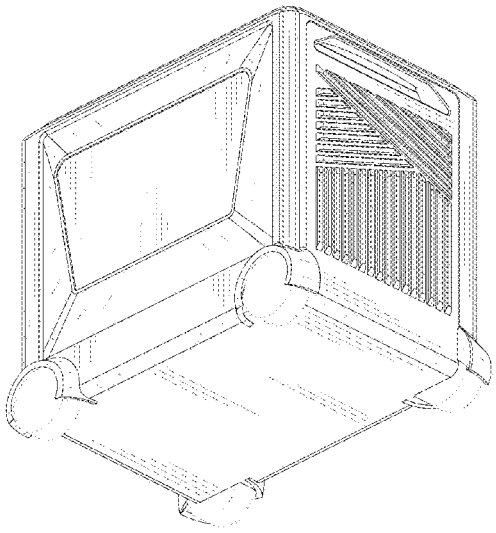

(56) **References Cited**

U.S. PATENT DOCUMENTS

D1,025,911	S	*	5/2024	Liu	D13/110
D1,025,912	S	*	5/2024	Chang	D13/110
D1,027,857	S	*	5/2024	Fang	D13/110
D1,028,890	S	*	5/2024	Xiao	D13/110
D1,028,891	S	*	5/2024	Chen	D13/110
D1,032,518	S	*	6/2024	Luo	D13/110
D1,032,521	S	*	6/2024	Yang	D13/110
D1,035,574	S	*	7/2024	Liu	D13/110
D1,038,023	S	*	8/2024	Luo	D13/110
D1,042,335	S	*	9/2024	Liu	D13/110
D1,046,779	S	*	10/2024	Huang	D13/110
D1,049,032	S	*	10/2024	Lei	D13/108
D1,050,038	S	*	11/2024	Zhang	D13/110
D1,051,822	S	*	11/2024	Lai	D13/103
D1,053,136	S	*	12/2024	Zhao	D13/110
D1,053,803	S	*	12/2024	Li	D13/110
D1,054,368	S	*	12/2024	Liming	D13/110

* cited by examiner

1.1

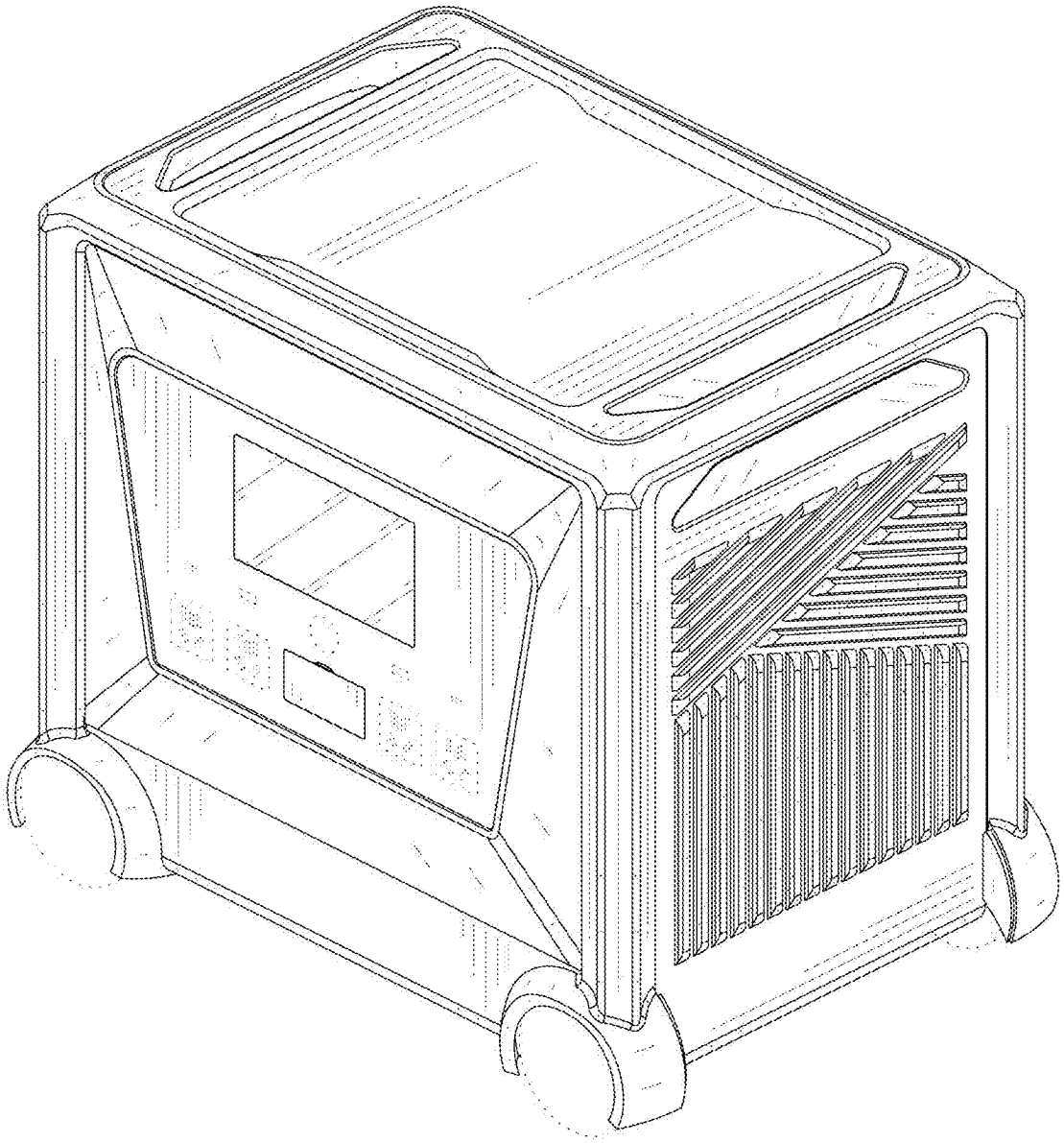

1.2

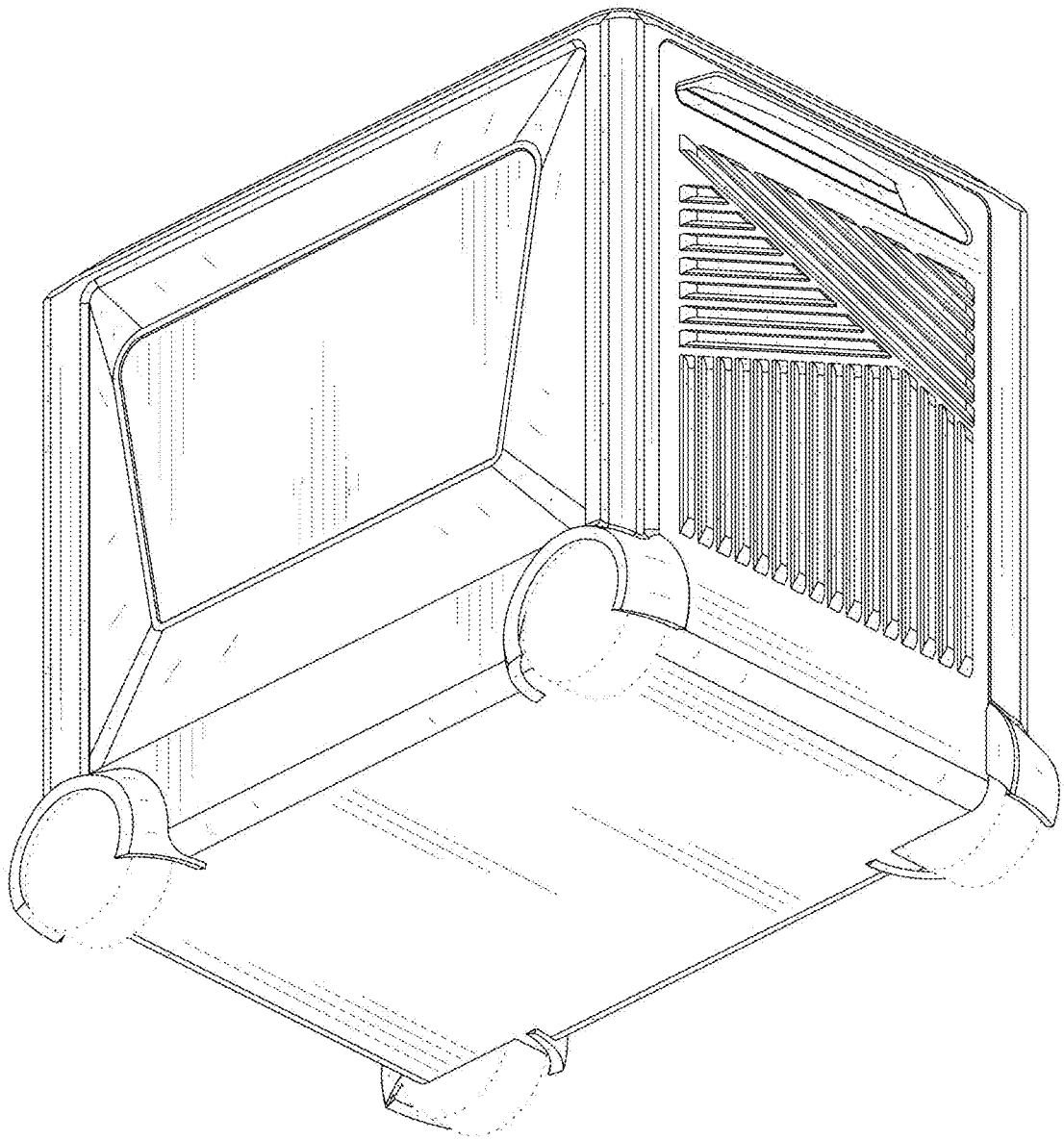

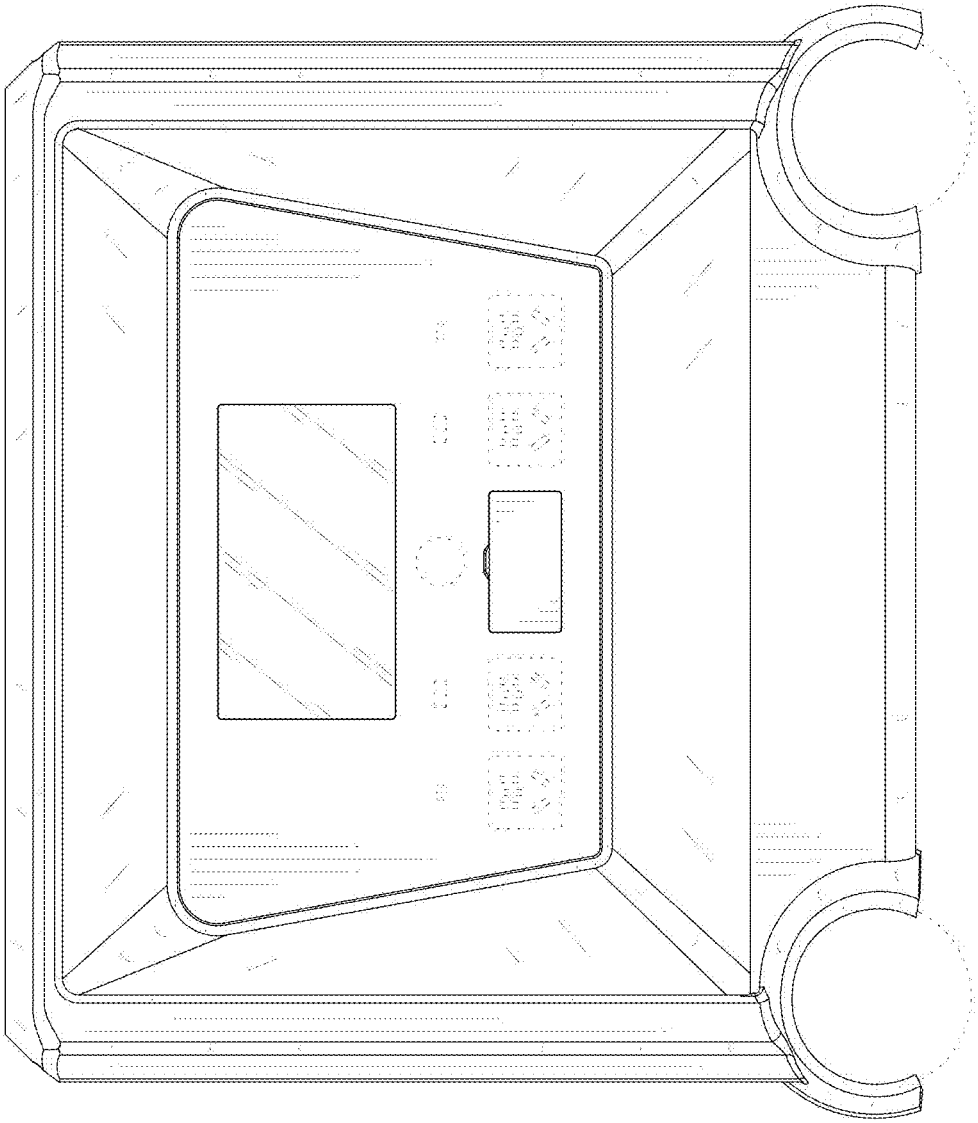

1.3

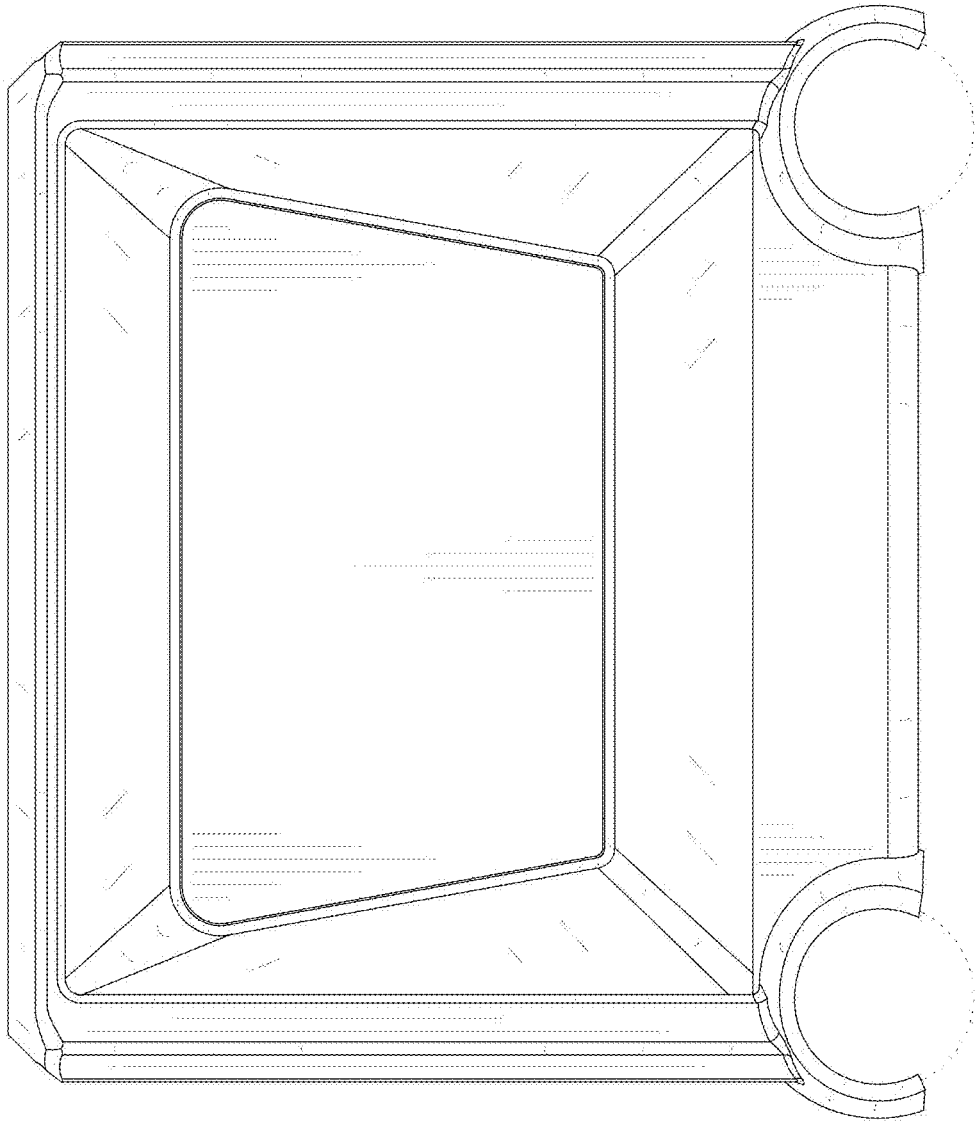

1.4

1.5

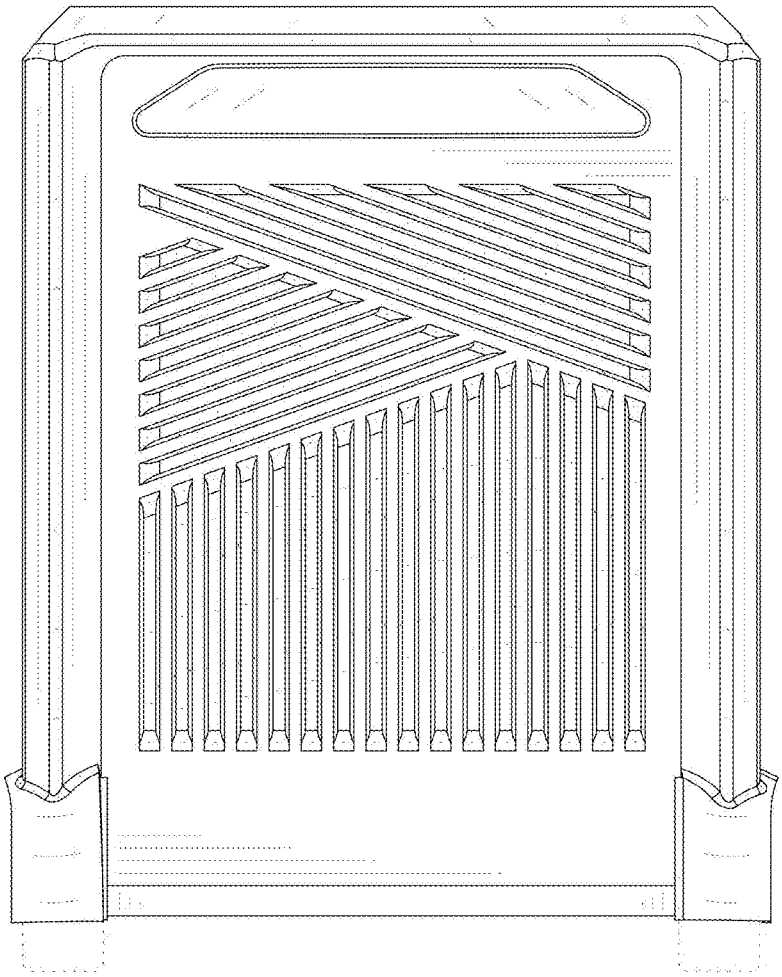

1.6

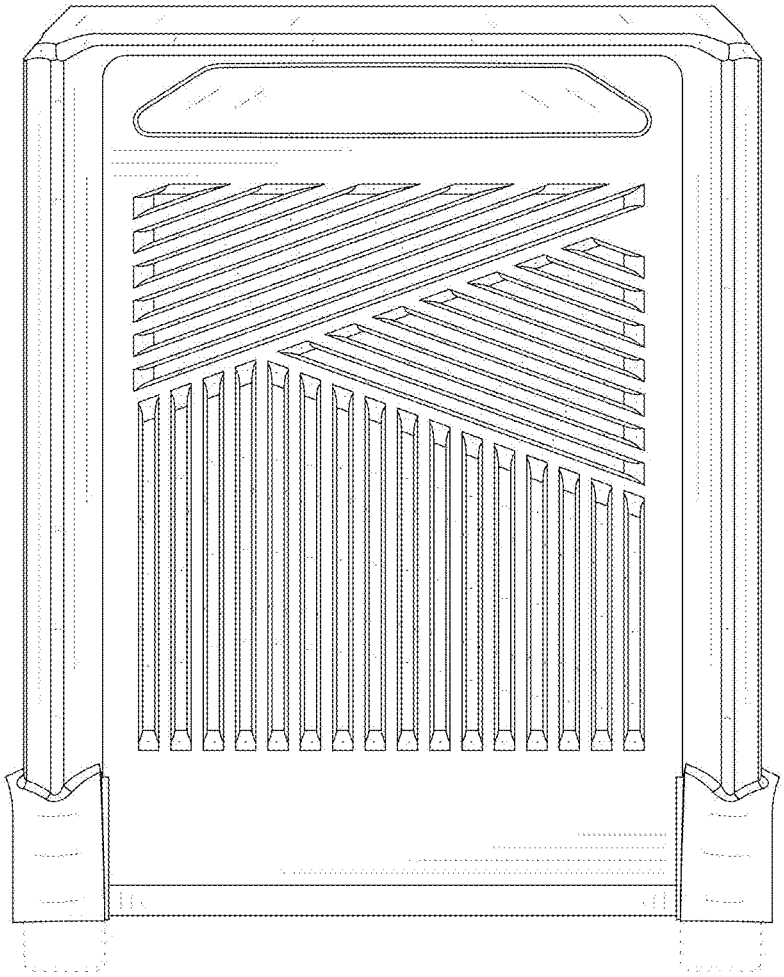

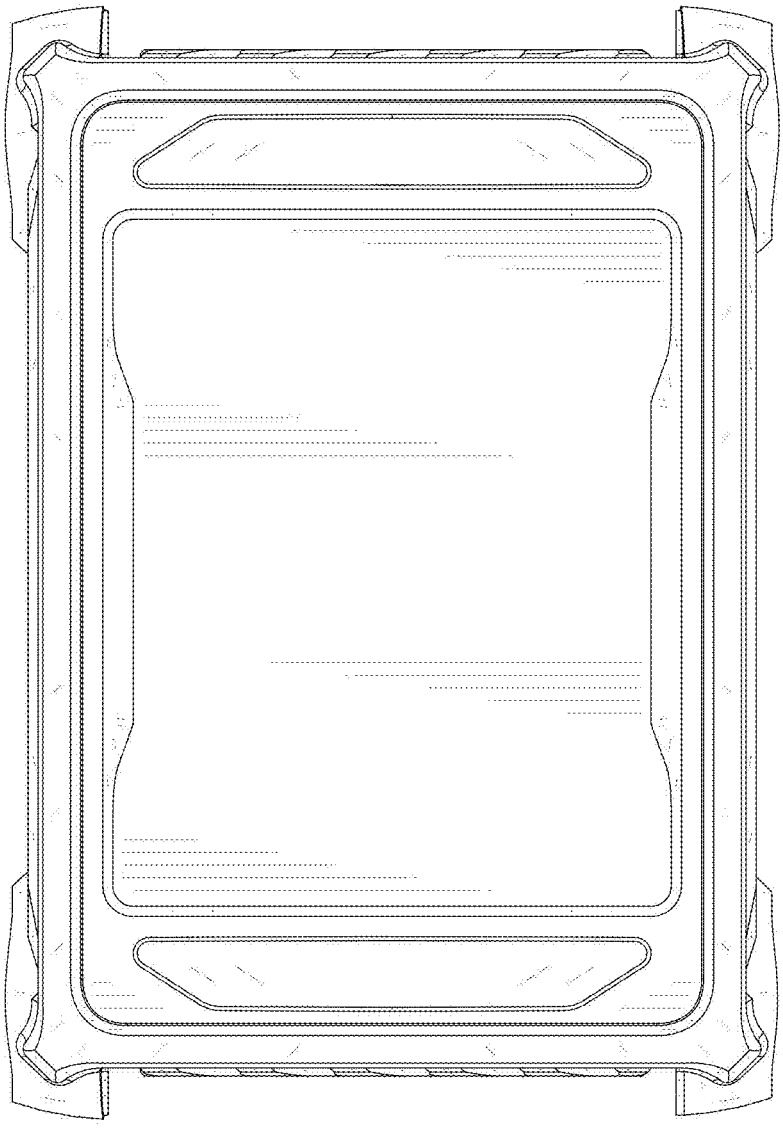

1.7

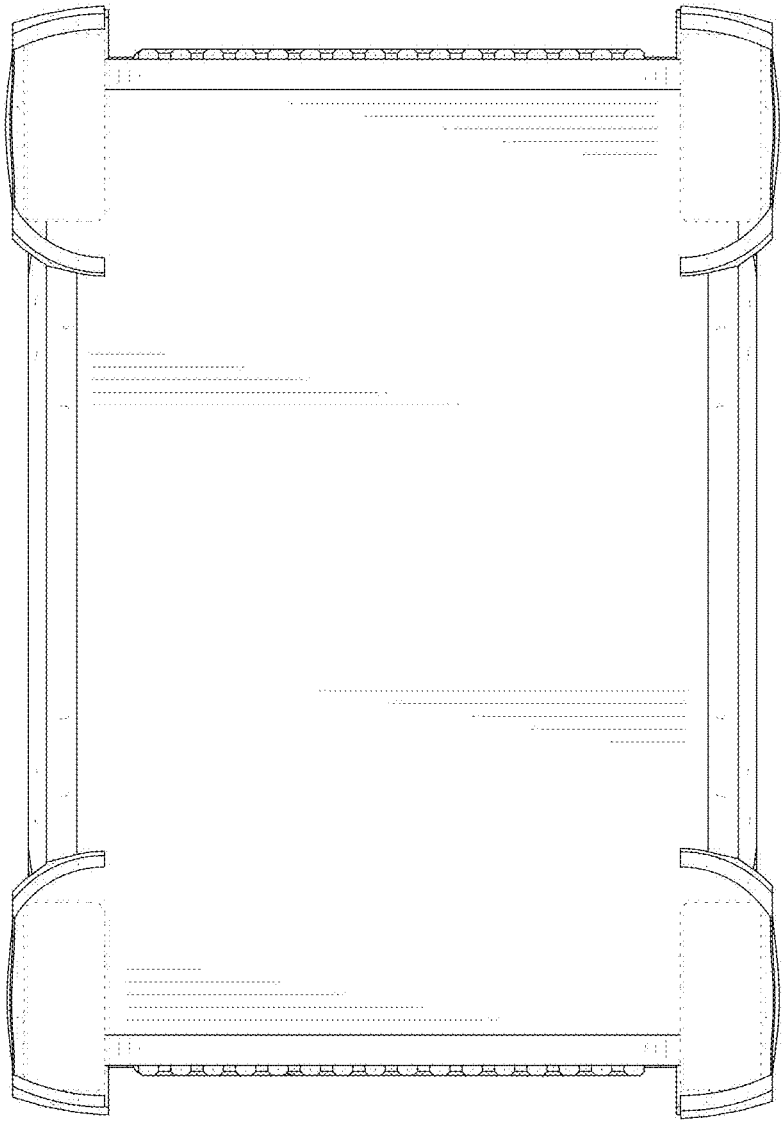

1.8