US0D1076854S

(12) **United States Design Patent** (10) **Patent No.: US D1,076,854 S**
Jhun et al. (45) **Date of Patent: ** May 27, 2025**

(54) **RFID READER**

(71) Applicant: **Crestron Electronics, Inc.**, Rockleigh, NJ (US)

(72) Inventors: **Sae Jhun**, Bayside, NY (US); **Donald Florczak**, Tenafly, NJ (US); **Howard Balch**, Bloomingdale, NJ (US)

(73) Assignee: **Crestron Electronics, Inc.**, Rockleigh, NJ (US)

(**) Term: **15 Years**

(21) Appl. No.: **29/950,400**

(22) Filed: **Jul. 2, 2024**

Related U.S. Application Data

(62) Division of application No. 29/800,258, filed on Jul. 20, 2021, now Pat. No. Des. 1,044,756.

(51) **LOC (15) Cl.** **14-03**

(52) **U.S. Cl.**
USPC **D14/155**; D14/453

(58) **Field of Classification Search**
USPC D14/356–358, 383–385, 420, 421, 453, D14/454, 217, 253, 299; D13/108, 147, D13/168
CPC G06Q 20/347; G06Q 20/322; G06Q 40/02
See application file for complete search history.

(56) **References Cited**

U.S. PATENT DOCUMENTS

D189,431	S	12/1960	Bibb
D206,286	S	11/1966	Ostyn
D222,471	S	10/1971	Shebanow et al.
D291,888	S	9/1987	Fong et al.
D305,882	S	2/1990	Kato et al.
D316,847	S	5/1991	Rowen
D329,621	S	9/1992	Green-Melkonian
D481,016	S	10/2003	Hillis
D522,511	S	6/2006	Sekou
D534,148	S	12/2006	Taylor et al.

(Continued)

FOREIGN PATENT DOCUMENTS

CN	302341091	3/2013
EM	001388847-0004	2/2014

OTHER PUBLICATIONS

"Fongwah Anti-Metal UHF Tags with Alien H9 Chip" Sep. 18, 2019, Amazon, site visited Apr. 16, 2025: https://www.amazon.com/FONGWAH-Anti-Metal-860-960MHz-Warehouse-Management/dp/B0D2288YMM (Year: 2019).*

(Continued)

Primary Examiner — Dana K Weiland
Assistant Examiner — Russell Carnell Smith, Jr.
(74) *Attorney, Agent, or Firm* — Crestron Electronics, Inc.

(57) **CLAIM**

The ornamental design for an RFID reader, as shown and described.

DESCRIPTION

FIG. **1** shows a front perspective view of an RFID reader according to an embodiment;
FIG. **2** shows a front perspective view thereof attached to a touchscreen;
FIG. **3** shows a front elevation view thereof;
FIG. **4** shows a rear elevation view thereof;
FIG. **5** shows a left elevation view thereof;
FIG. **6** shows a right elevation view thereof;
FIG. **7** shows a right elevation view thereof attached to a touchscreen;
FIG. **8** shows a top plan view thereof; and,
FIG. **9** shows a bottom plan view thereof.
The broken line showing of the touchscreen is included for the purpose of illustrating environment and forms no part of the claimed design.

1 Claim, 5 Drawing Sheets

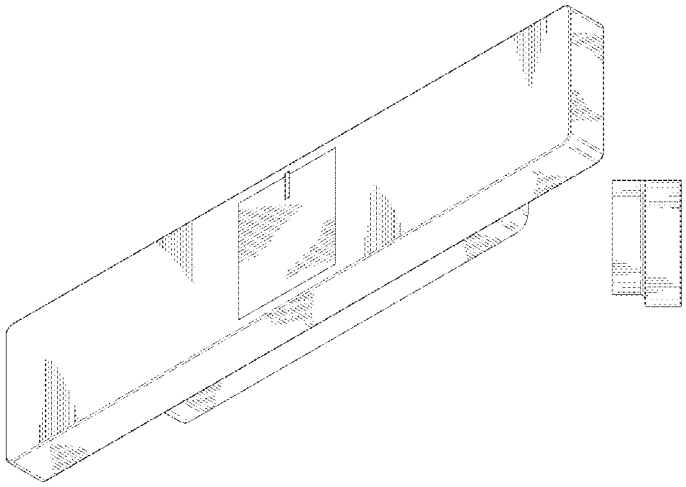

(56) **References Cited**

U.S. PATENT DOCUMENTS

D535,974	S		1/2007	Alwicker
D556,130	S		11/2007	Tajima
D564,976	S		3/2008	Billings
D582,413	S		12/2008	Parker et al.
D590,401	S		4/2009	Mandel
D591,292	S		4/2009	Parker
D629,785	S		12/2010	Yachida et al.
8,269,670	B2		9/2012	Sprowl et al.
D678,573	S		3/2013	Lane
D695,942	S	*	12/2013	Ng D26/75
D710,358	S		8/2014	Park et al.
D710,361	S		8/2014	Park
D723,204	S		2/2015	McGowan
D732,226	S		6/2015	Hartman
9,070,060	B2		6/2015	Forster
D734,194	S		7/2015	Kastner et al.
D735,392	S	*	7/2015	Ng D26/76
9,197,850	B2		11/2015	Koberling
D751,078	S	*	3/2016	Hatzav D14/425
D762,214	S		7/2016	Nguyen et al.
D766,487	S		9/2016	Cai
D784,994	S		4/2017	Fujuichi et al.
D785,626	S	*	5/2017	Fujiuchi D14/453
D814,467	S		4/2018	Long
D814,468	S		4/2018	Long
D857,016	S		8/2019	Long
D861,684	S		10/2019	Chen et al.
D870,731	S		12/2019	Kuo
D885,389	S	*	5/2020	Sawabe D14/453
D947,185	S		3/2022	Imaizumi et al.
D1,044,756	S	*	10/2024	Balch D14/155
D1,053,871	S	*	12/2024	Bonet Lozano D14/385
2006/0054710	A1		3/2006	Forster et al.
2007/0297020	A1		12/2007	Shen
2008/0224875	A1		9/2008	Phillips et al.
2010/0126000	A1		5/2010	Forster
2011/0209372	A1	*	9/2011	Padgett G09F 3/005 40/633
2013/0140363	A1		6/2013	Hart
2013/0168449	A1		7/2013	Lee
2015/0271354	A1		9/2015	Imoto
2022/0164622	A1	*	5/2022	Arque Saleta G06K 19/077
2022/0245419	A1	*	8/2022	Omori G06K 19/0779
2022/0414417	A1	*	12/2022	Forster G06K 19/072
2023/0259735	A1	*	8/2023	Omori H01Q 1/22 340/572.7

OTHER PUBLICATIONS

"Yarongtech UHF RFID Anti Metal Tag Strip ISO18000-6C EPC" Jan. 29, 2018, Amazon, site visited Apr. 16, 2025: https://www.amazon.com/Metal-ISO18000-6C-Class1-Waterproof-Outdoor/dp/B079NM6GDN (Year: 2018).*

"Elo 2D Barcode Scanner E393160" Jun. 26, 2024, NewEgg, site visited Apr. 16, 2025: https://www.newegg.com/p/16P-006J-00035 (Year: 2024).*

Notice of References Cited, U.S. Appl. No. 29/800,258, U.S. Patent and Trademark Office, Aug. 5, 2024.

"Yuhanus Door Access Control System Waterproof NFC RFID Keypad" Oct. 30, 2023, Amazon, site visited Jul. 27, 2024: https://www.amazon.com/dp/BOCM3RNX4R (Year: 2023).

"Generic LP66 Waterproof Metal Embedded Access Control Machine RFID" Dec. 31, 2022, Amazon, site visited Jul. 27, 2024: https://www.amazon.sa/-/en/Waterproof-Embedded-Control-Induction-Fingerprint/dp/BOBRFFLSWJ (Year: 2022).

"Yarongtech UHF RFID Anti metal Tag Strip ISO18000-6C EPC Class1 Gen2" Jan. 29, 2018, Amazon, site visited Jul. 27, 2024: https://www.amazon.com/Metal-IS018000-6C-Class 1-Waterproof-Outdoor/dp/B079N M6G On (Year: 2018).

Notice of References Cited, U.S. Appl. No. 29/800,258, U.S. Patent and Trademark Office, Jun. 25, 2024.

* cited by examiner

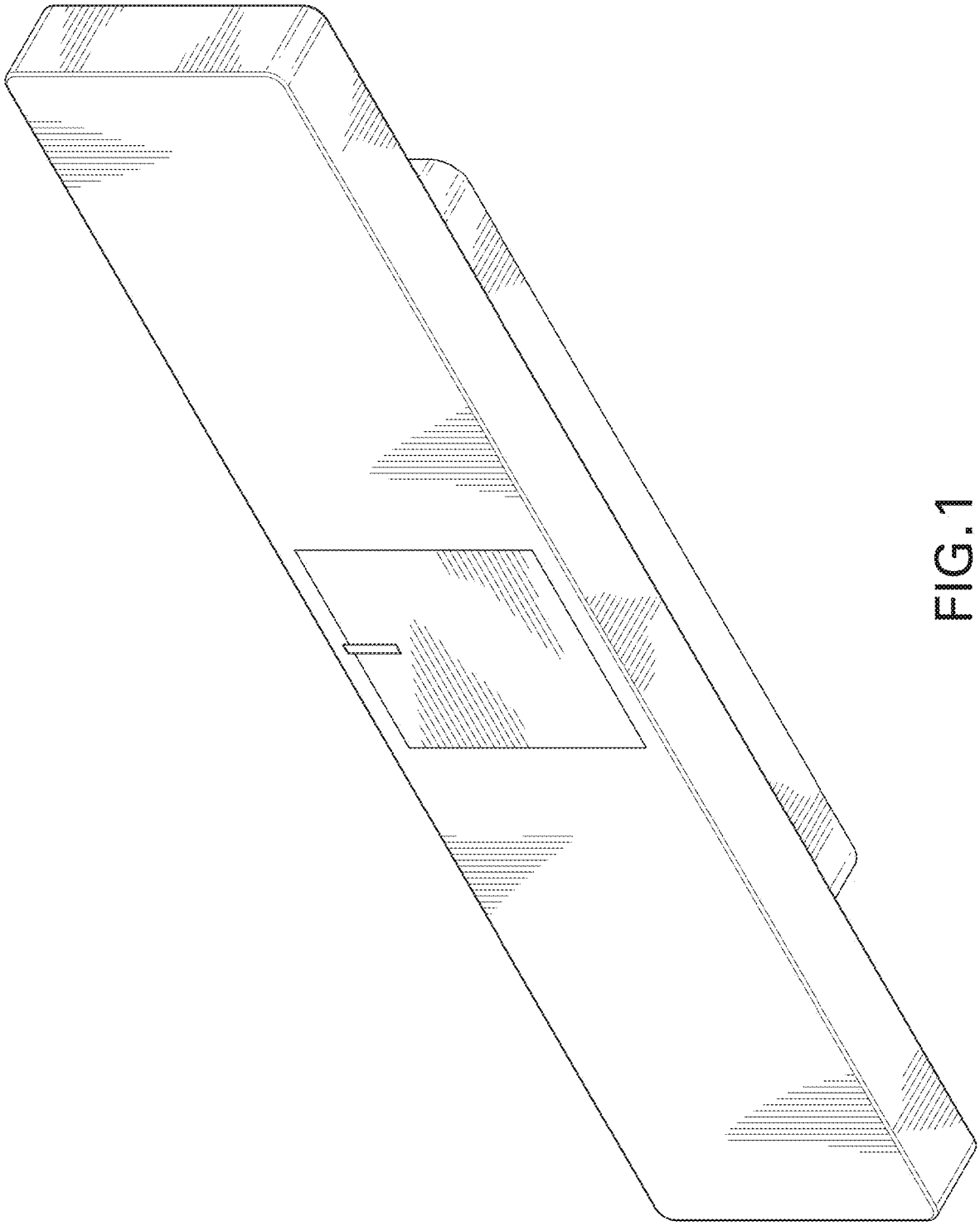

FIG. 1

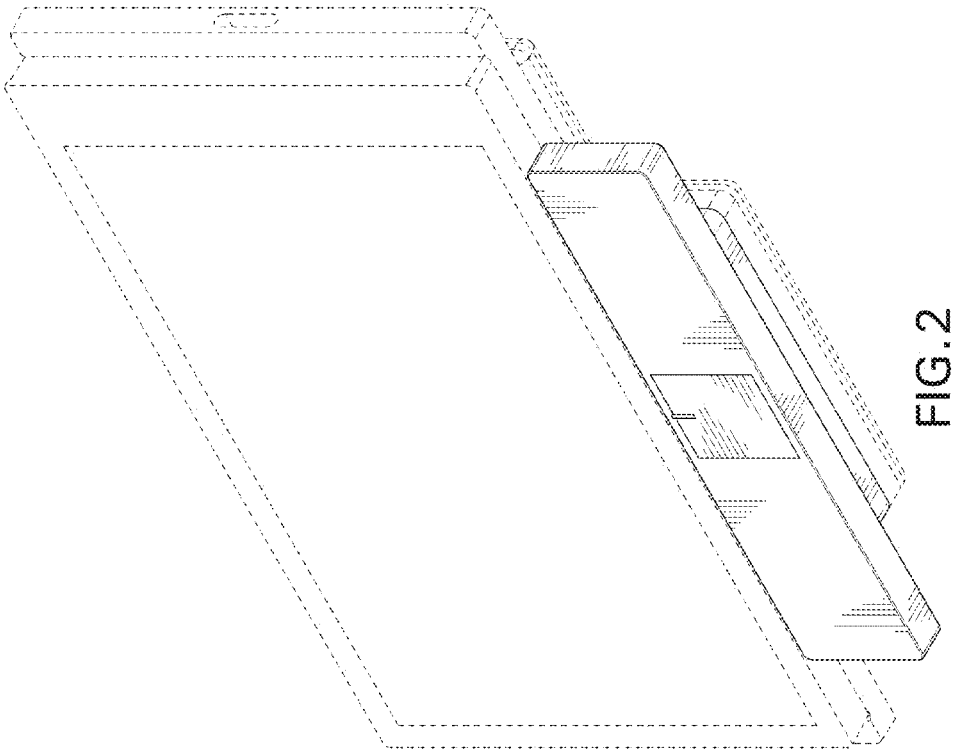

FIG. 2

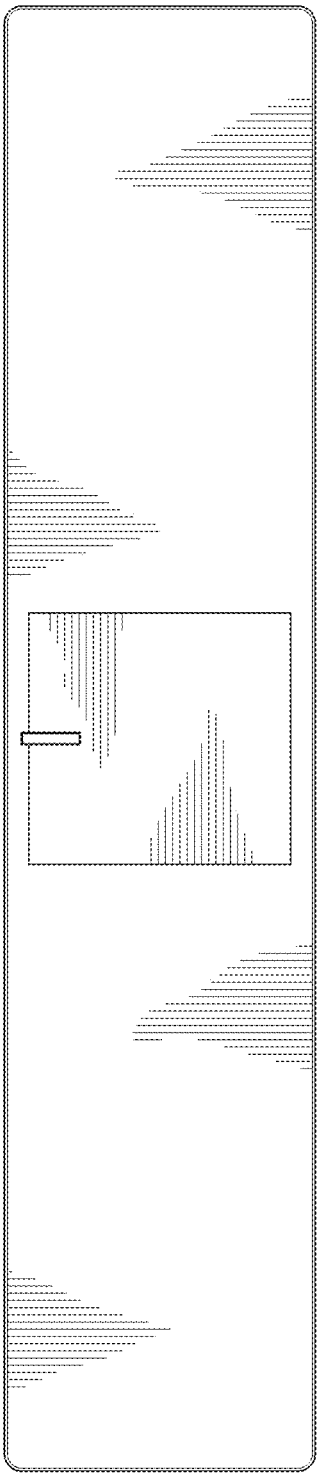

FIG. 3

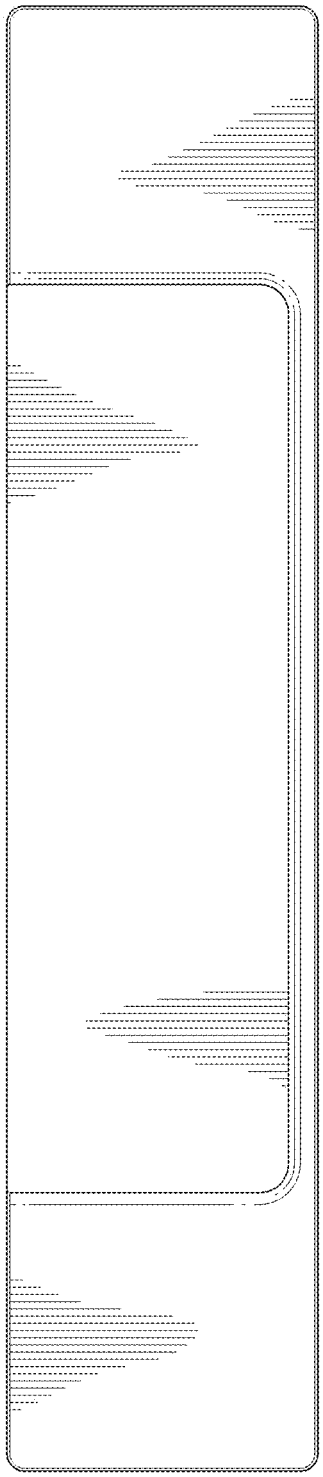

FIG. 4

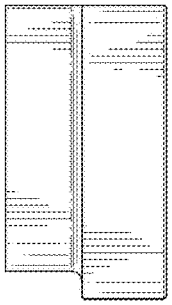

FIG.5

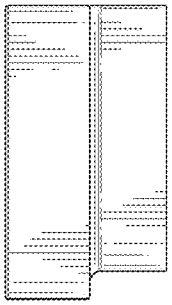

FIG.6

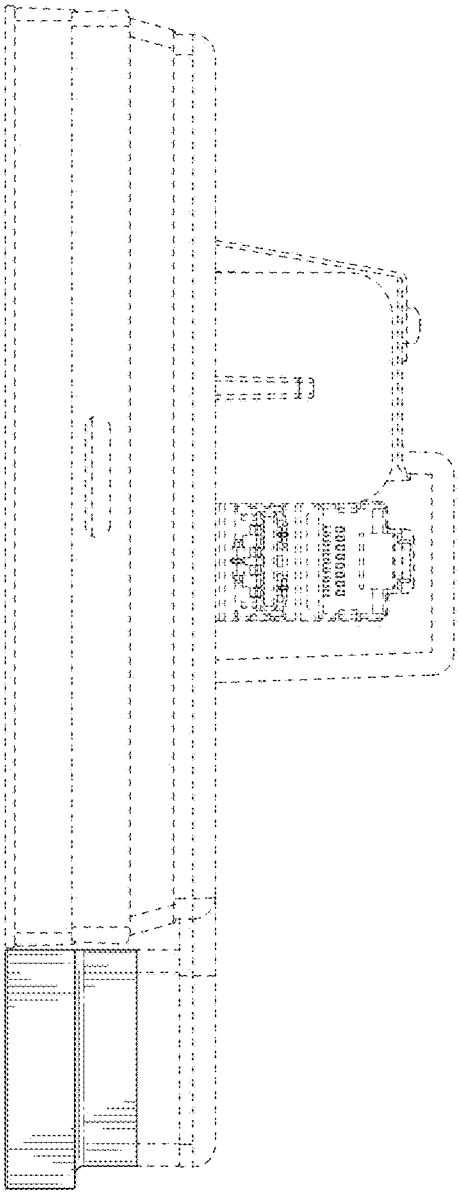

FIG.7

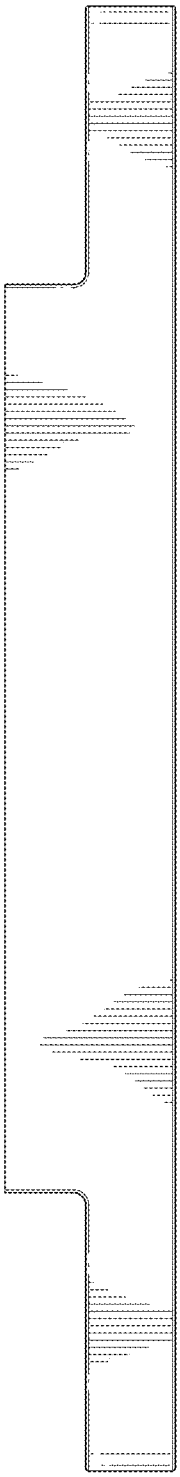

FIG. 8

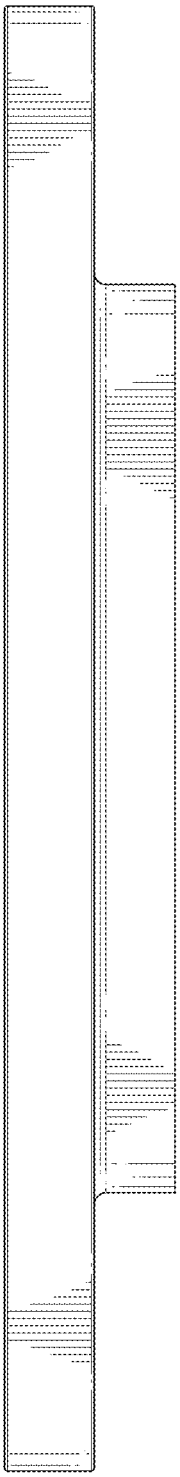

FIG. 9