US0D1077016S

(12) United States Design Patent

Muhlenkamp, IV et al.

(10) Patent No.: US D1,077,016 S

(45) Date of Patent: ** May 27, 2025

(54) **CAMERA**

(71) Applicant: **GoPro, Inc.**, San Mateo, CA (US)

(72) Inventors: **John George Muhlenkamp, IV**, Mapleton, UT (US); **Adrian Santos**, Lake Forest, CA (US)

(73) Assignee: **GoPro, Inc.**, San Mateo, CA (US)

(**) Term: **15 Years**

(21) Appl. No.: **29/940,031**

(22) Filed: **Apr. 30, 2024**

Related U.S. Application Data

(62) Division of application No. 29/923,076, filed on Dec. 27, 2023, now Pat. No. Des. 1,031,810, which is a division of application No. 29/833,552, filed on Apr. 5, 2022, now Pat. No. Des. 1,016,876.

(51) **LOC (15) Cl.** **16-01**

(52) **U.S. Cl.**
USPC **D16/218**

(58) **Field of Classification Search**
USPC D16/200, 202–204, 208, 218, 219
CPC G03B 15/03; G03B 17/02; G03B 17/04; G03B 17/08; G03B 17/56; G03B 19/04; H04N 23/50; H04N 23/51; H04N 23/54; H04N 23/55; H04N 23/62; H04N 23/63; H04N 7/181; H04N 7/183; H04N 7/18
See application file for complete search history.

(56) **References Cited**

U.S. PATENT DOCUMENTS

D724,637	S		3/2015	Samuels
D749,164	S		2/2016	Raccah
9,360,742	B1		6/2016	Harrison
D764,566	S		8/2016	Bennett
D777,240	S		1/2017	Costa
9,681,029	B2		6/2017	Harrison
D800,205	S		10/2017	Harrison
D800,822	S		10/2017	Costa
D808,163	S		1/2018	Song
9,904,148	B1		2/2018	Druker
D835,910	S		12/2018	Eliyahu
D837,861	S		1/2019	Luo
D841,721	S		2/2019	Muhlenkamp, IV
D856,391	S		8/2019	Liu
D867,420	S	*	11/2019	Zhang D16/202
D867,427	S	*	11/2019	Bai D16/202
D868,131	S		11/2019	Hu
D869,539	S		12/2019	Hu
D871,480	S	*	12/2019	Hu D16/202

(Continued)

Primary Examiner — Ramzi Almatrahi

(74) *Attorney, Agent, or Firm* — Young Basile Hanlon & MacFarlane, P.C.

(57) **CLAIM**

The ornamental design for a camera as shown and described.

DESCRIPTION

FIG. **1** is a top, front and left side perspective view of a camera showing our new design;
FIG. **2** is a bottom, rear and right side perspective view thereof;
FIG. **3** is a bottom, front and left side perspective view thereof;
FIG. **4** is a top, rear and right side perspective view thereof;
FIG. **5** is a front elevation view thereof;
FIG. **6** is a rear elevation view thereof;
FIG. **7** is a right side elevation view thereof;
FIG. **8** is a left side elevation view thereof;
FIG. **9** is a top plan view thereof; and,
FIG. **10** is a bottom plan view thereof.
The broken lines depict portions of the camera that form no part of the claimed design.

1 Claim, 9 Drawing Sheets

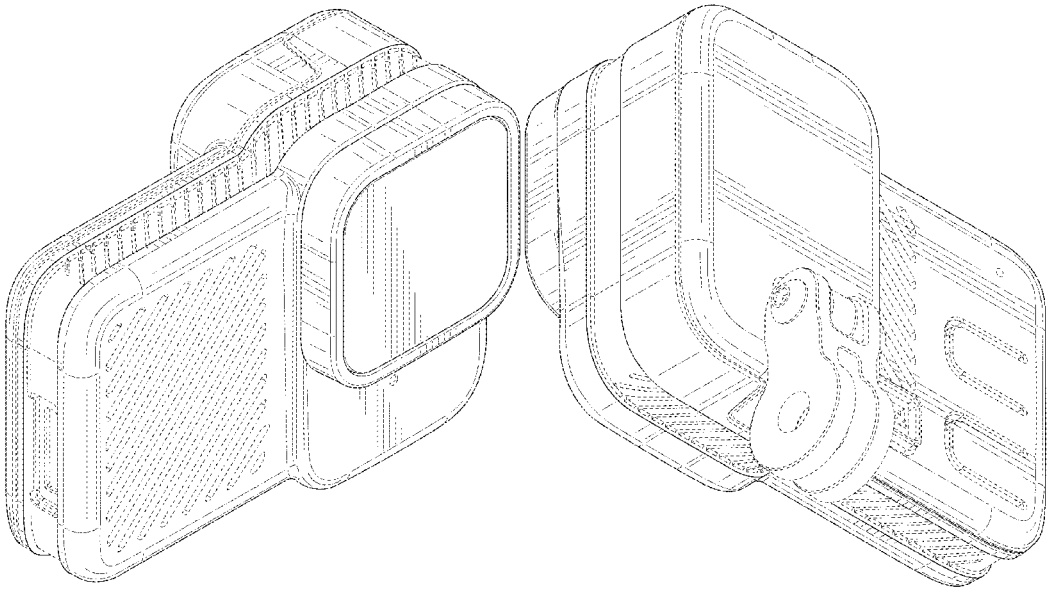

(56) **References Cited**

U.S. PATENT DOCUMENTS

D888,792	S		6/2020	Luo	
D894,256	S		8/2020	Vitale	
D905,786	S		12/2020	Vitale	
D935,506	S		11/2021	Tan	
D949,222	S		4/2022	Bergman	
D951,321	S		5/2022	Muhlenkamp	
D954,125	S		6/2022	Muhlenkamp	
D963,016	S		9/2022	Todd	
D963,726	S		9/2022	Au	
D978,953	S	*	2/2023	Coster	D16/200
D980,302	S	*	3/2023	Han	D16/202
D989,165	S		6/2023	Vitale	
D991,318	S	*	7/2023	Muhlenkamp, IV	D16/218
D997,232	S	*	8/2023	Muhlenkamp, IV	D16/218
D1,003,979	S		11/2023	Alberstein	
D1,024,165	S	*	4/2024	Muhlenkamp, IV	D16/219
D1,033,520	S	*	7/2024	Alberstein	D16/200
D1,036,536	S	*	7/2024	Nguyen	D16/202

* cited by examiner

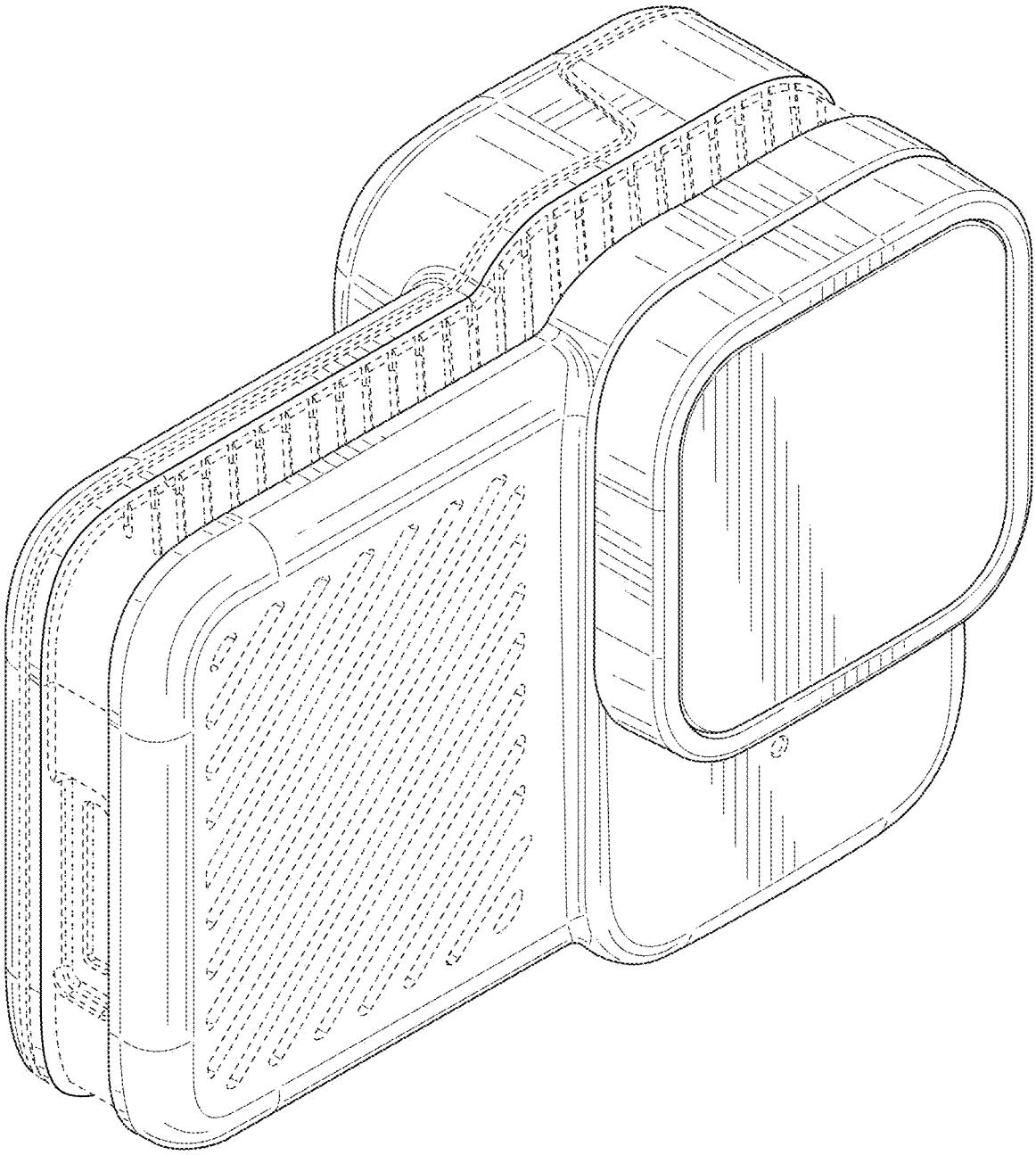

FIG. 1

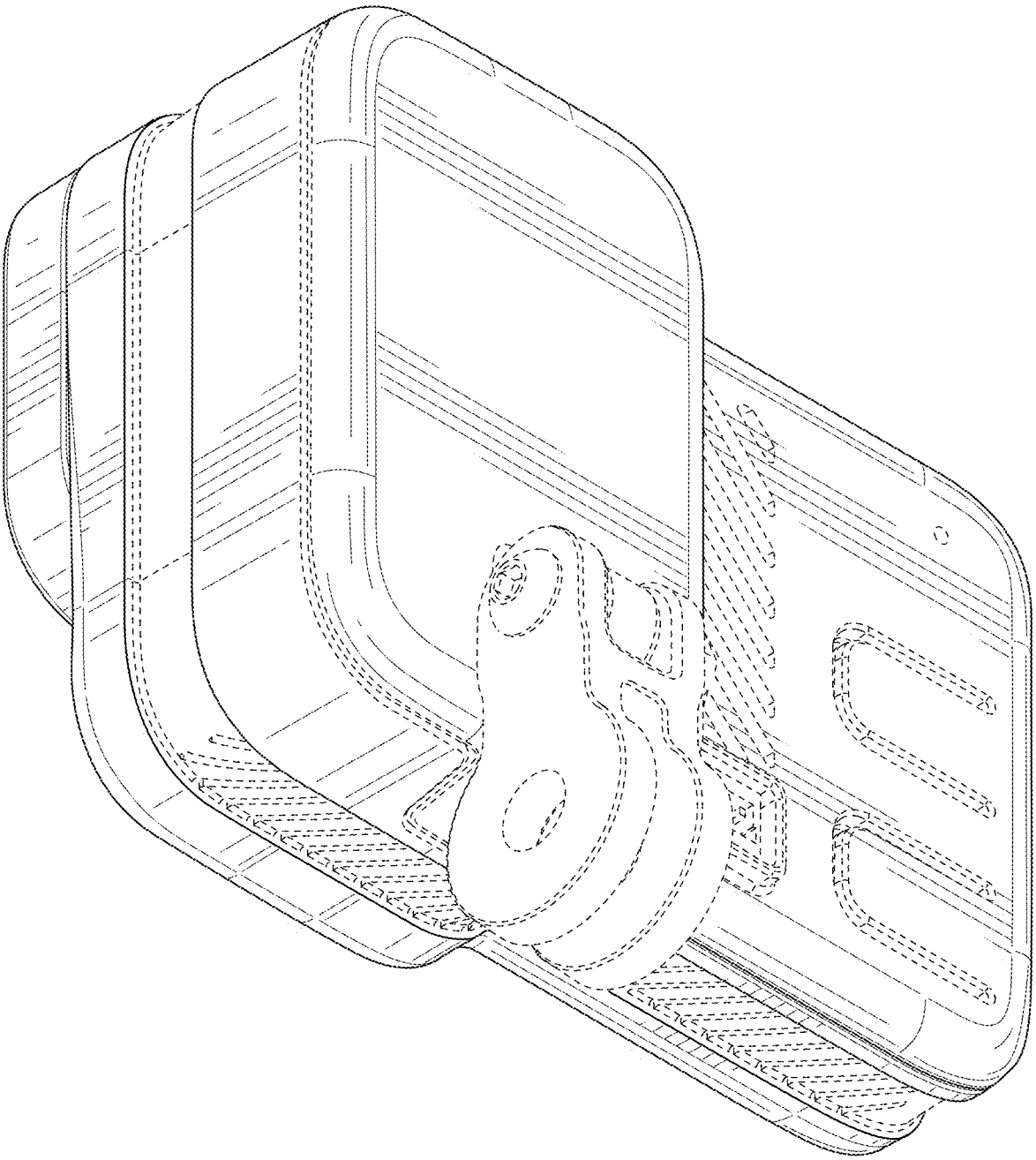

FIG. 2

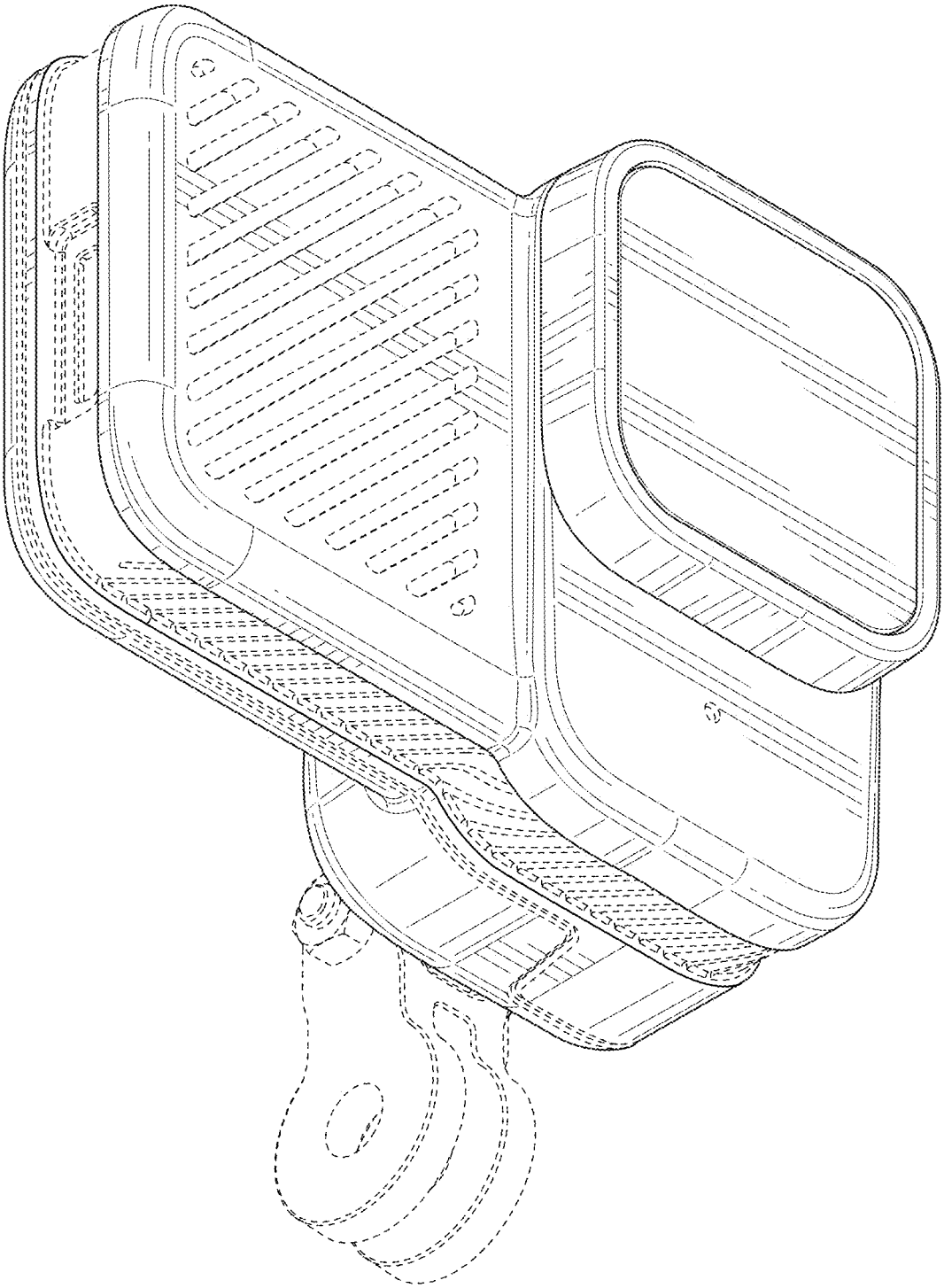

FIG. 3

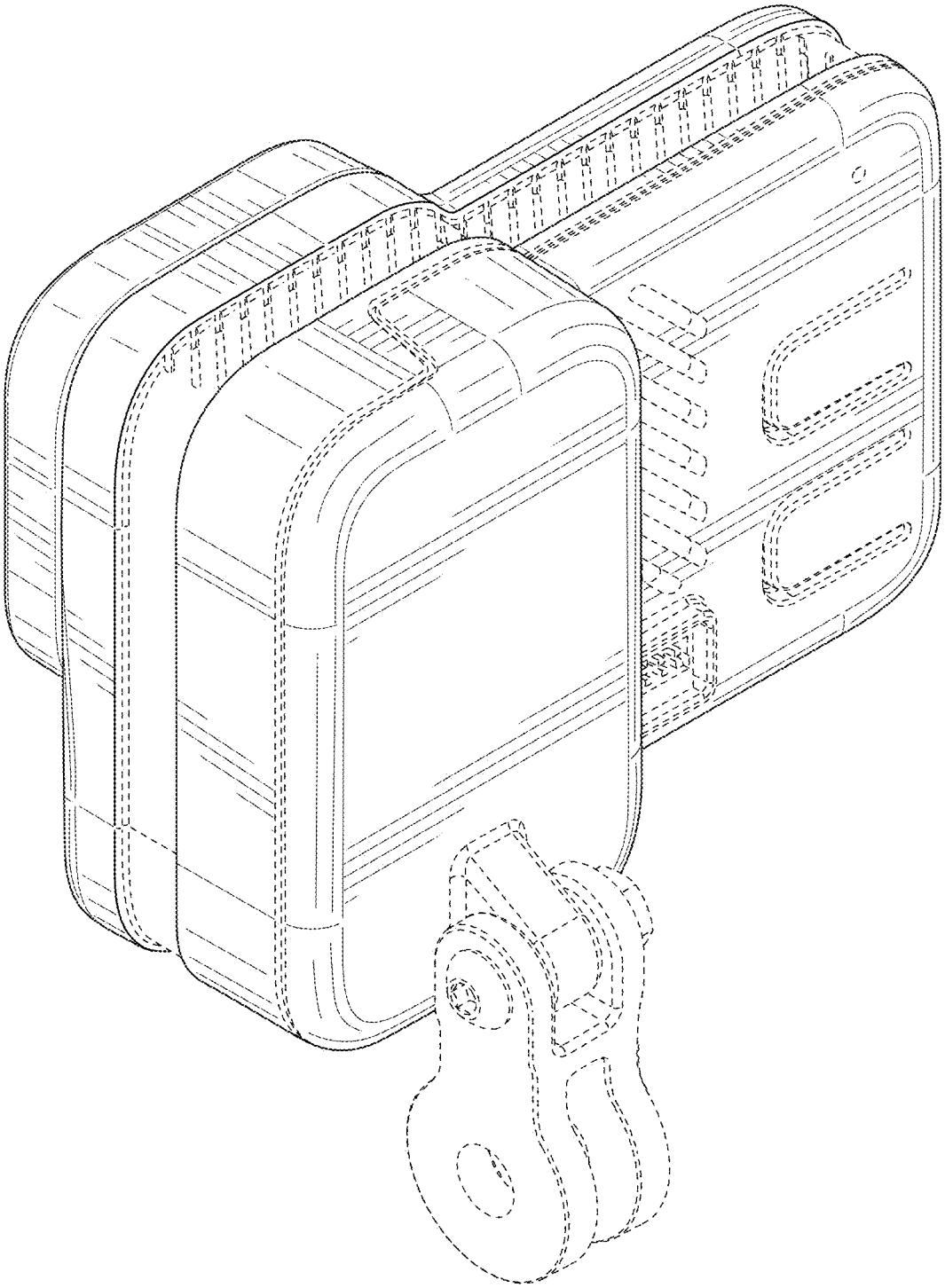

FIG. 4

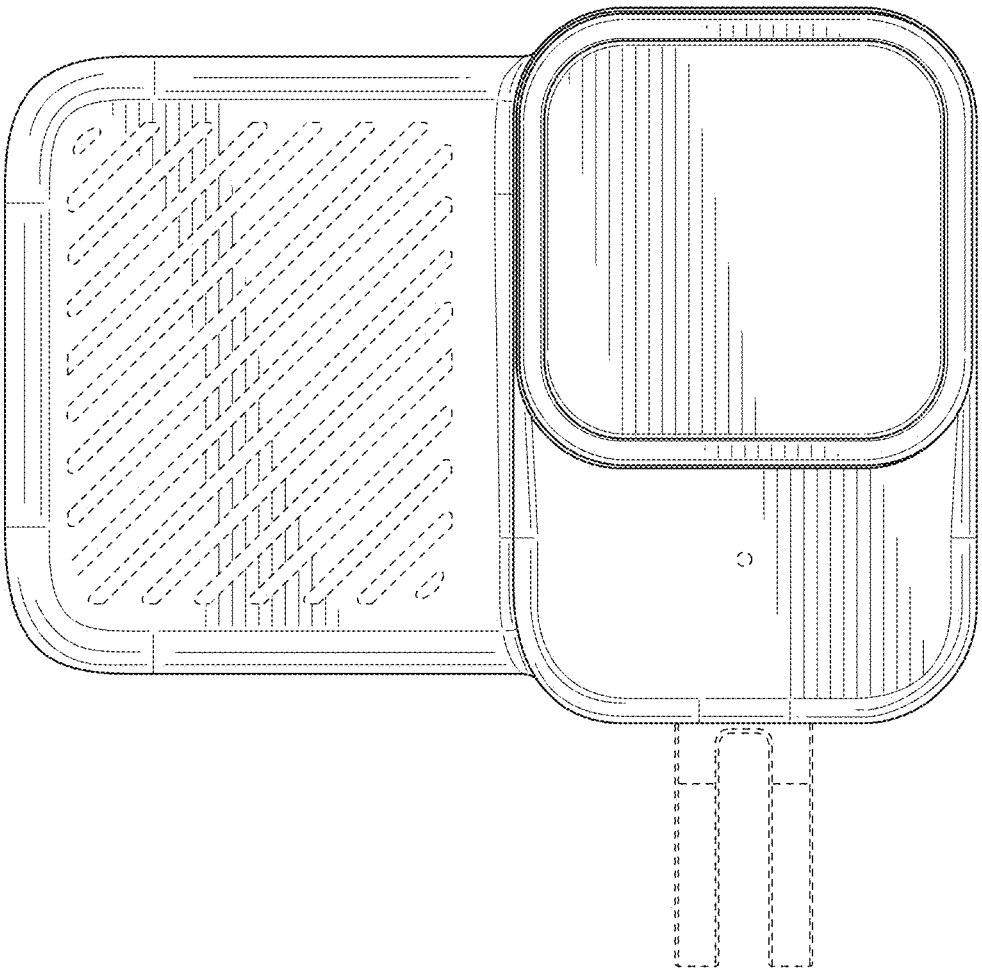

FIG. 5

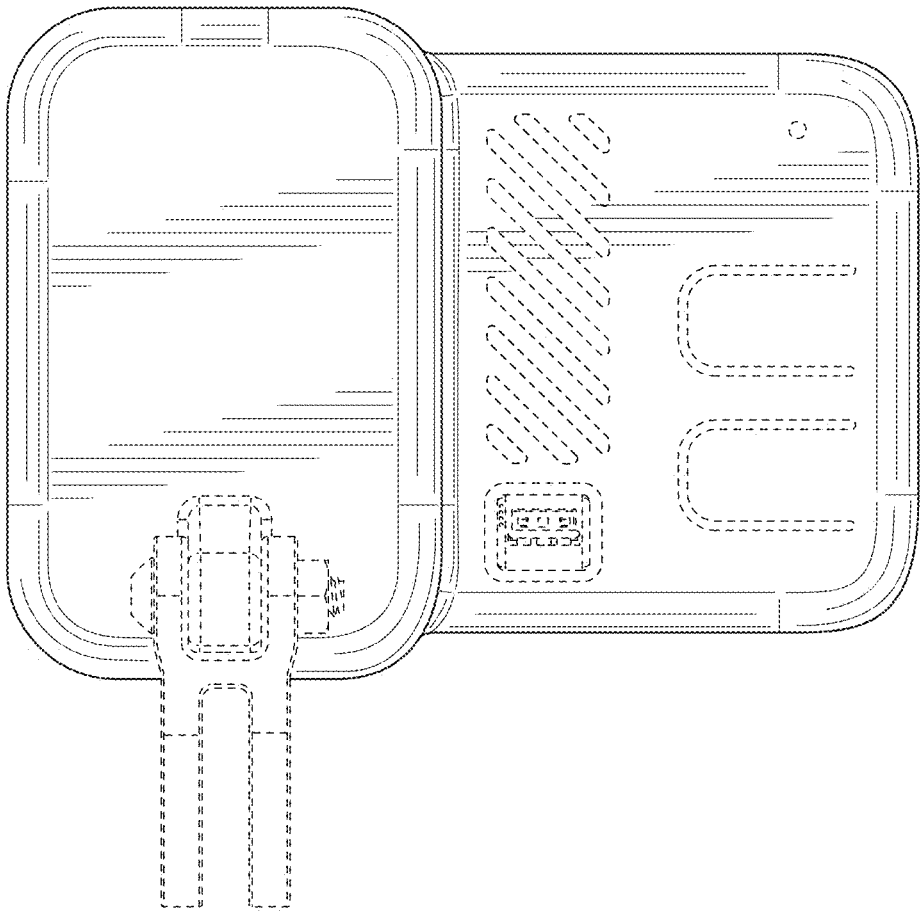

FIG. 6

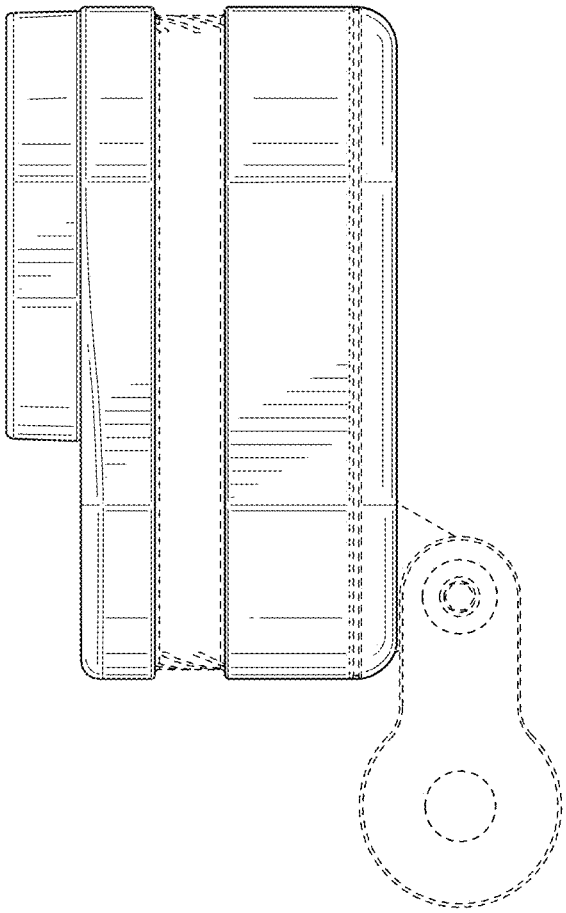

FIG. 7

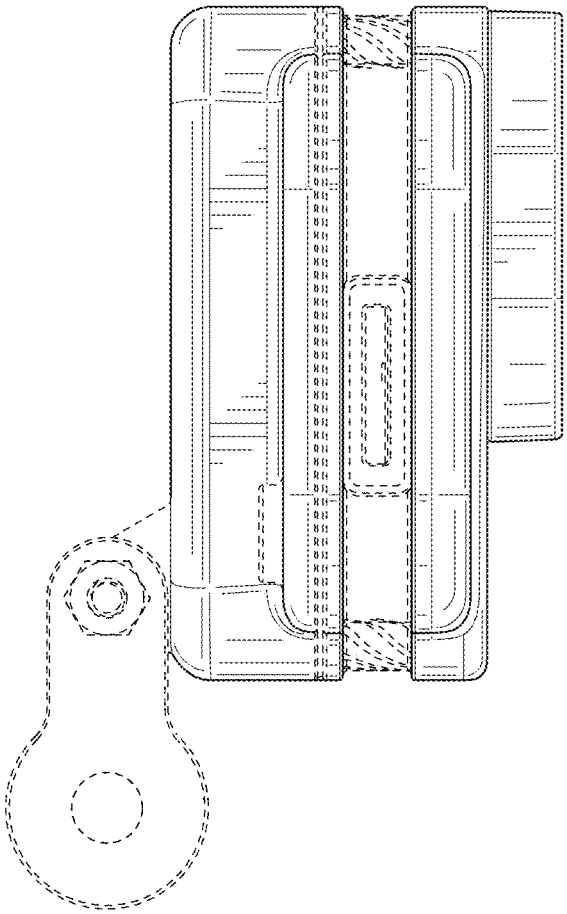

FIG. 8

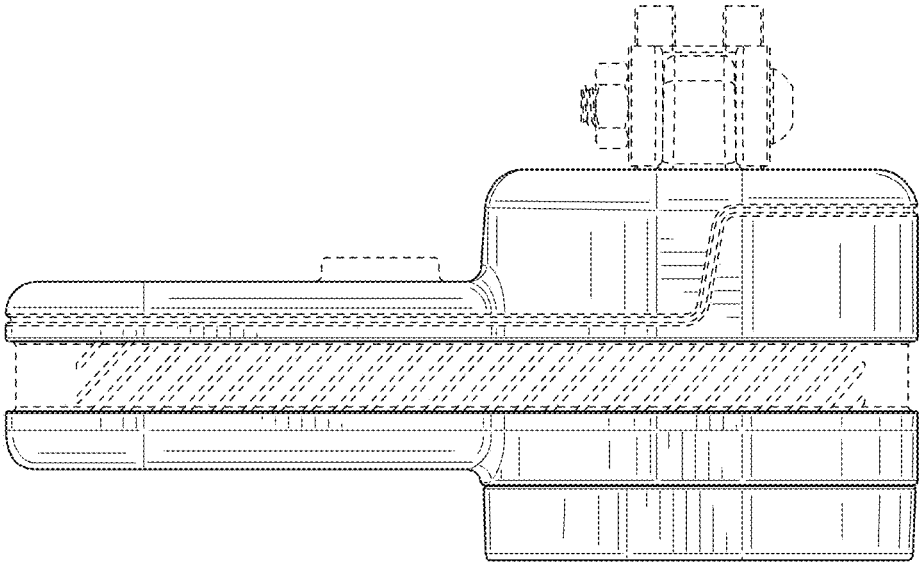

FIG. 9

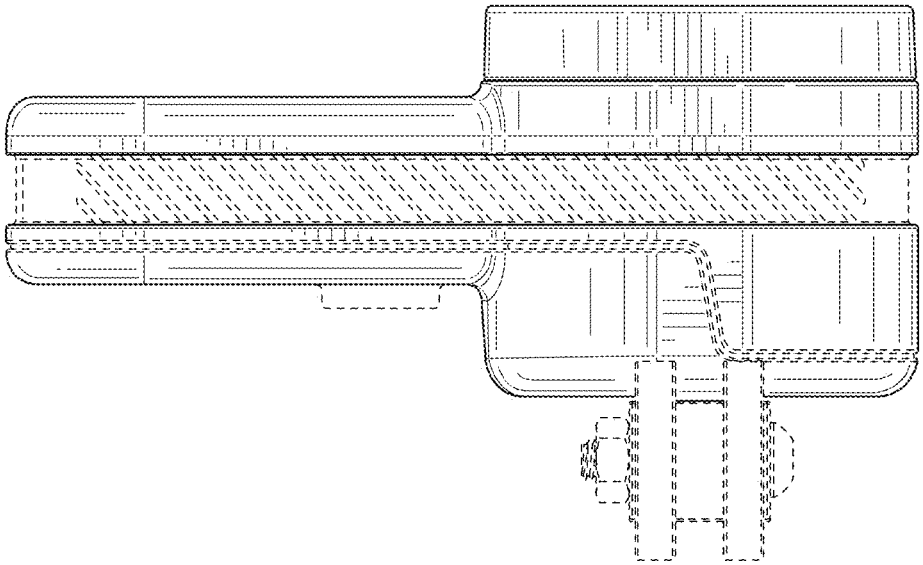

FIG. 10