US0D1077216S

(12) United States Design Patent

Kawachi

(10) Patent No.: US D1,077,216 S
(45) Date of Patent: ** May 27, 2025

(54) **SYRINGE CONNECTOR**

(71) Applicant: **KABUSHIKI KAISHA TOP**, Tokyo (JP)

(72) Inventor: **Issei Kawachi**, Tokyo (JP)

(**) Term: **15 Years**

(21) Appl. No.: **35/519,586**

(22) Filed: **Jan. 5, 2023**

(80) **Hague Agreement Data**

Int. Filing Date: **Jan. 5, 2023**
Int. Reg. No.: **DM/226909**
Int. Reg. Date: **Jan. 5, 2023**
Int. Reg. Pub. Date: **Jan. 5, 2024**

(51) **LOC (15) Cl.** **24-02**

(52) **U.S. Cl.**
USPC **D24/129**

(58) **Field of Classification Search**
USPC D24/112–114, 129–130
CPC A61J 1/22; A61J 1/201; A61J 1/2086
See application file for complete search history.

(56) **References Cited**

U.S. PATENT DOCUMENTS

D473,647	S	*	4/2003	Francavilla	D24/129
D474,839	S	*	5/2003	Francavilla	D24/129
D737,962	S	*	9/2015	Schultz	D24/129
D753,284	S	*	4/2016	Burks	D24/110
D827,150	S	*	8/2018	Nakagawa	D24/224
D827,151	S	*	8/2018	Nakagawa	D24/224
D1,027,165	S	*	5/2024	Lau	D24/110
D1,037,443	S	*	7/2024	Kawachi	D24/129
D1,038,388	S	*	8/2024	Kawachi	D24/129
D1,038,389	S	*	8/2024	Kawachi	D24/129
D1,038,390	S	*	8/2024	Kawachi	D24/129

(Continued)

FOREIGN PATENT DOCUMENTS

JP	D1634443	*	6/2019
JP	D1647410	*	12/2019

(Continued)

OTHER PUBLICATIONS

Needle Free Connectors, Vygon, [Post date unknown], [Site seen: Aug. 28, 2024], Seen at URL: https://vygon.co.uk/choosing-a-needle-free-connector/ (Year: 2024).*

(Continued)

Primary Examiner — Natasha Vujcic
Assistant Examiner — Gilbert B Ford
(74) *Attorney, Agent, or Firm* — Muncy, Geissler, Olds & Lowe, P.C.

(57) **CLAIM**

The ornamental design for a syringe connector as shown and described.

DESCRIPTION

1. Syringe connector
1.1: Front view of the syringe connector;
1.2: Back view thereof;
1.3: Right view thereof;
1.4: Left view thereof;
1.5: Top view thereof;
1.6: Bottom view thereof;
1.7: Cross-sectional view along line **1.7-1.7** shown in reproduction **1.5**;
1.8: Perspective view thereof; and
1.9: Perspective of a position of use.
This article is a syringe connector, as shown in reproductions; the views including the cross-sectional views (**1.7-1.7** line cross-sectional view) specify the portions to be sought as partial design right; Reproduction **1.9** is a perspective view of the article in a position of use. The broken lines

(Continued)

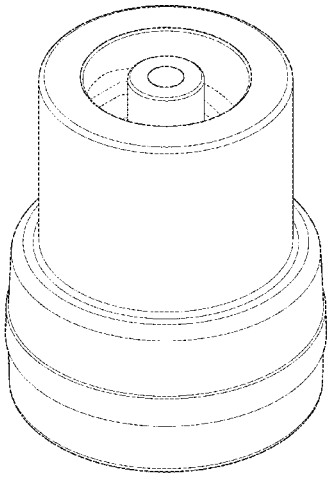

showing of the syringe connector is for the purpose of illustrating portions of the "article" and form no parts of the claimed design.

1 Claim, 9 Drawing Sheets

(56) **References Cited**

U.S. PATENT DOCUMENTS

D1,038,391	S *	8/2024	Kawachi	D24/129
2017/0119990	A1*	5/2017	Boussignac	A61M 16/0666
2018/0134459	A1*	5/2018	Gerami	A61M 16/0816
2021/0315776	A1*	10/2021	Hang	A61M 5/3134
2022/0305215	A1*	9/2022	Cruz	A61M 16/0463
2023/0390505	A1*	12/2023	Shevgoor	A61M 5/345
2024/0108807	A1*	4/2024	Kawachi	A61M 5/31
2024/0189187	A1*	6/2024	Kopp	A61M 39/10

FOREIGN PATENT DOCUMENTS

JP	2022049565 A		3/2022
JP	D1760897	*	1/2024
JP	D1773364	*	6/2024

OTHER PUBLICATIONS

Syringe Connector Pack, Beonchip, [Post date unknown], [Site seen: Aug. 28, 2024], Seen at URL: https://vygon.co.uk/choosing-a-needle-free-connector/ (Year: 2024).*

Needle Free Connector, Baihe Europe, [Post date: Dec. 30, 2020], [Site seen: Aug. 28, 2024], Seen at URL: https://www.baihemedical.eu/needle-free-connector/ (Year: 2020).*

* cited by examiner

1.1

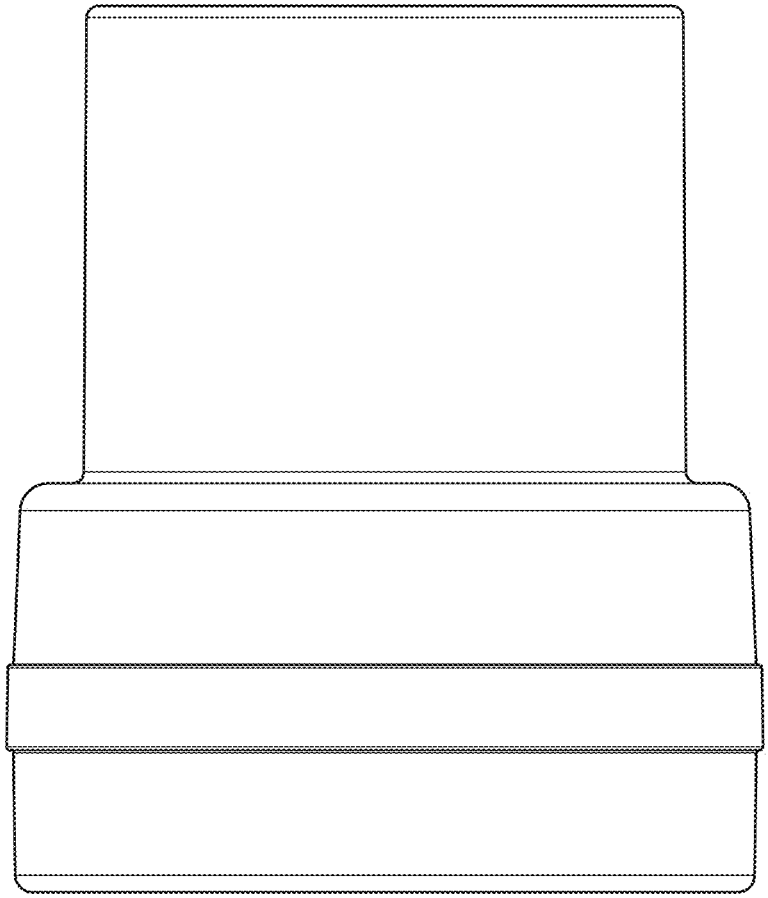

1.2

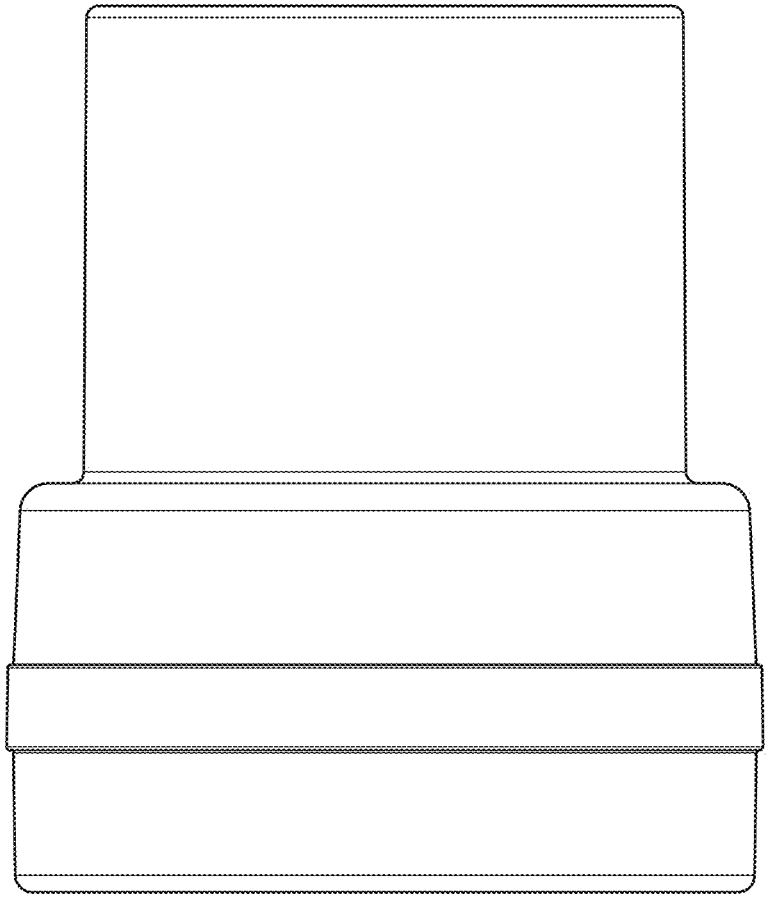

1.3

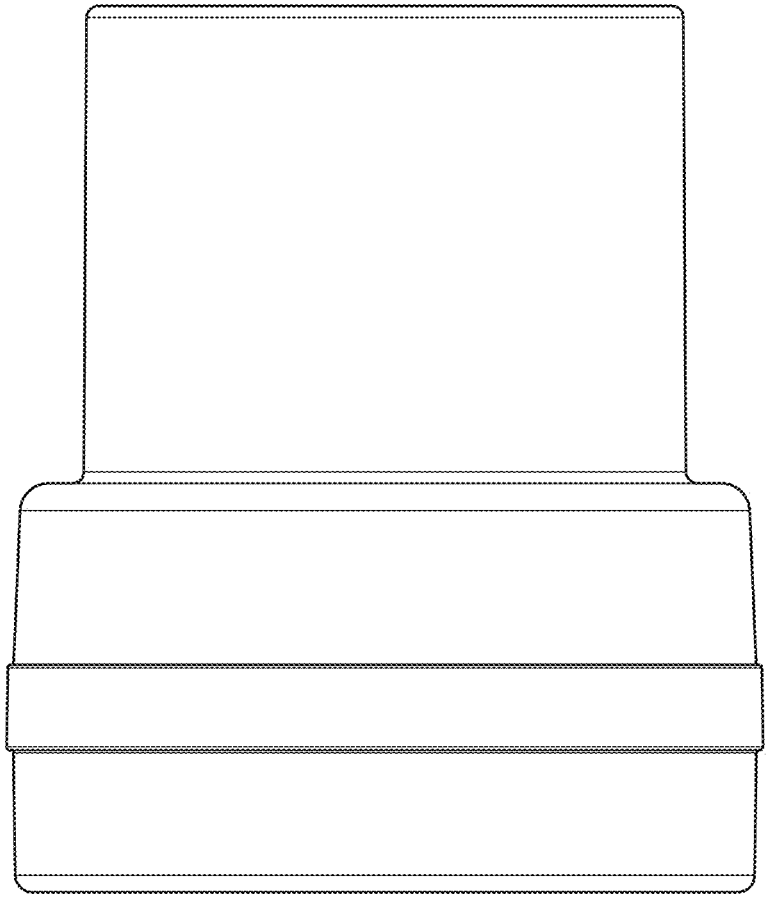

1.4

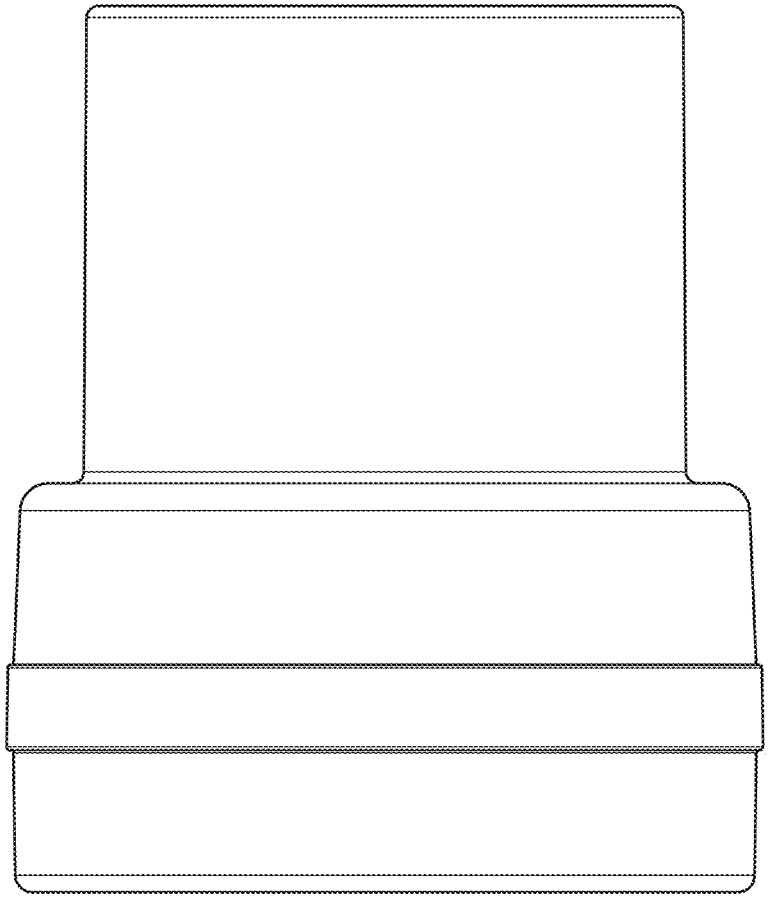

1.5

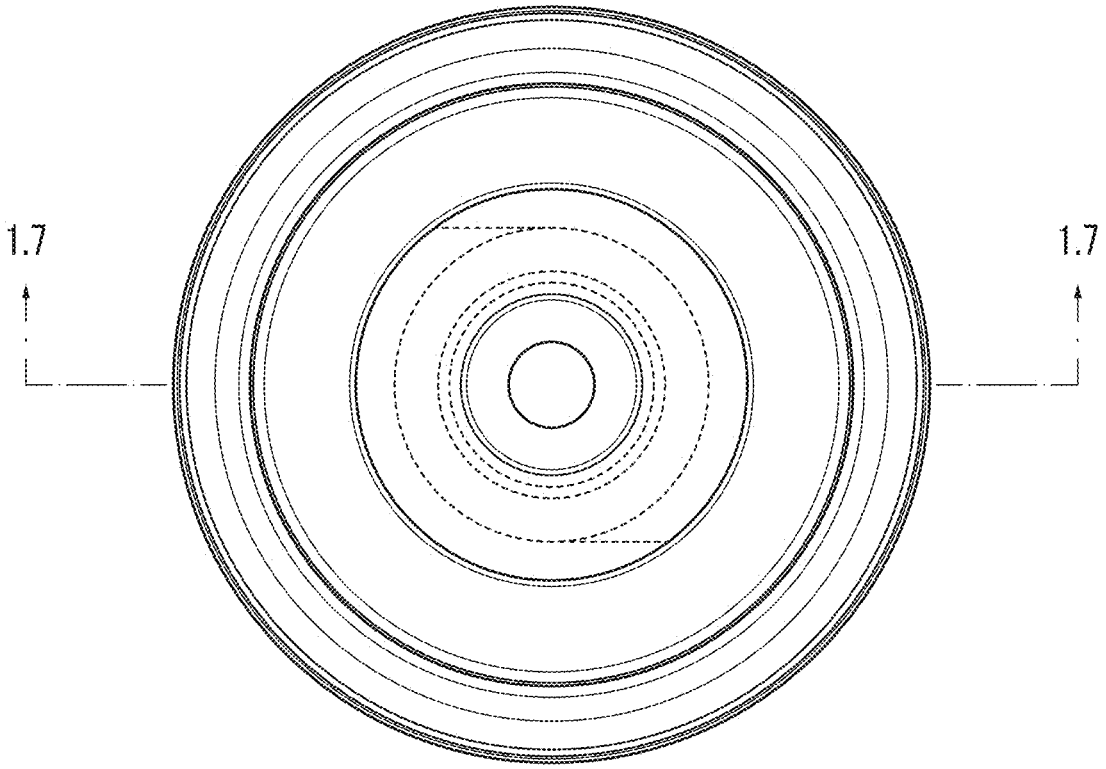

1.6

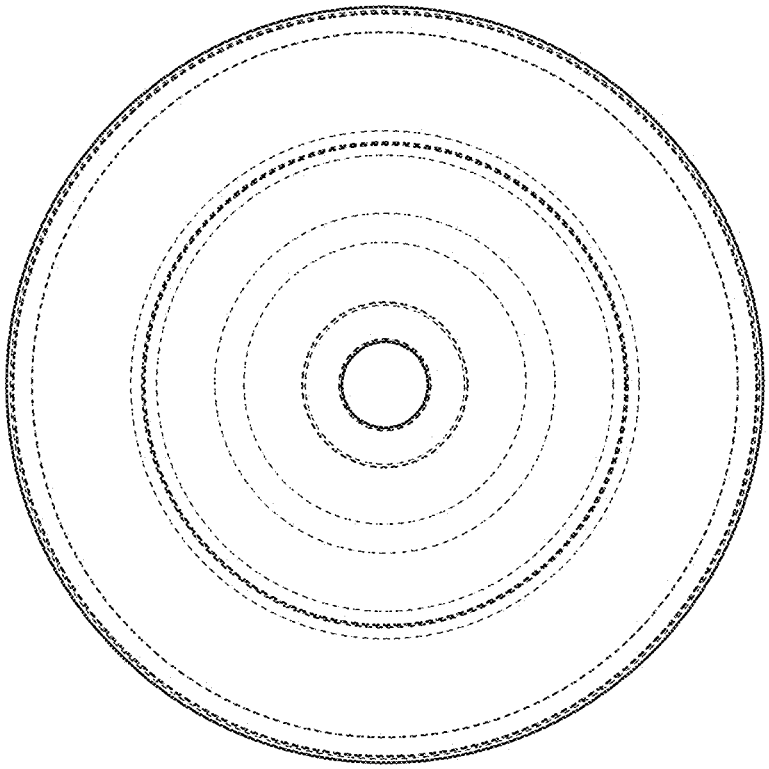

1.7

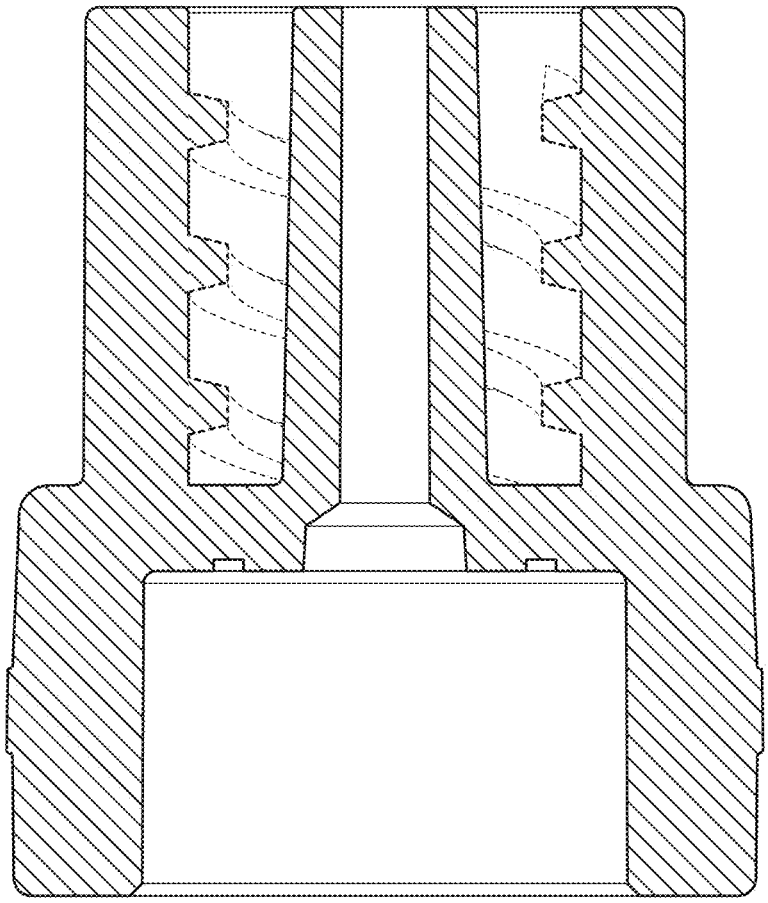

1.8

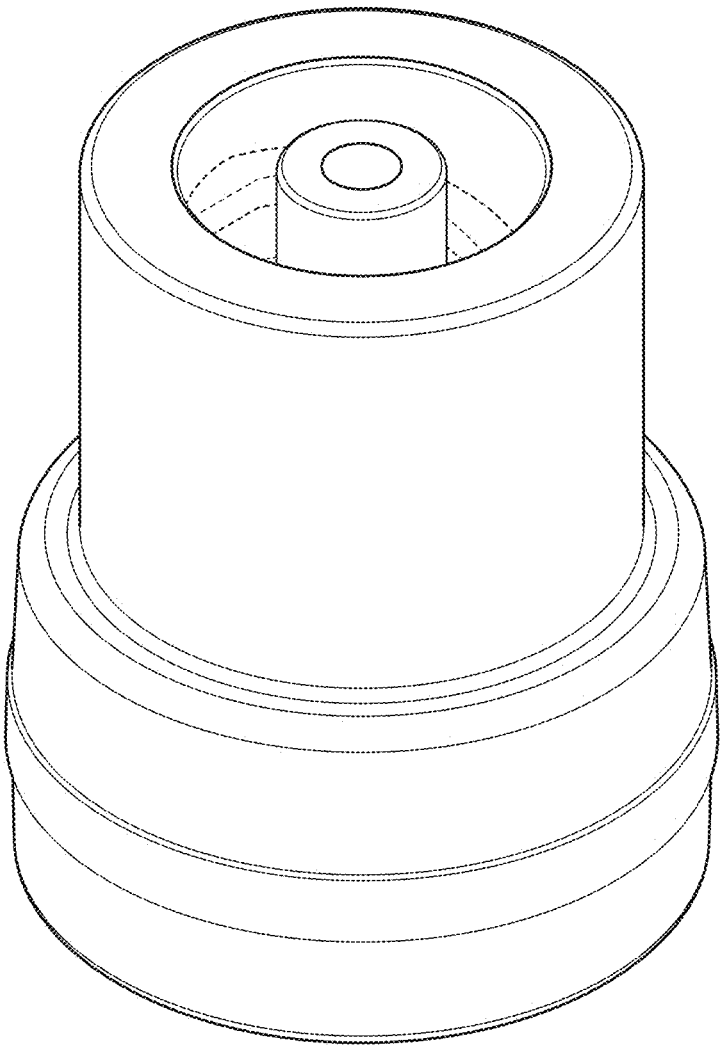
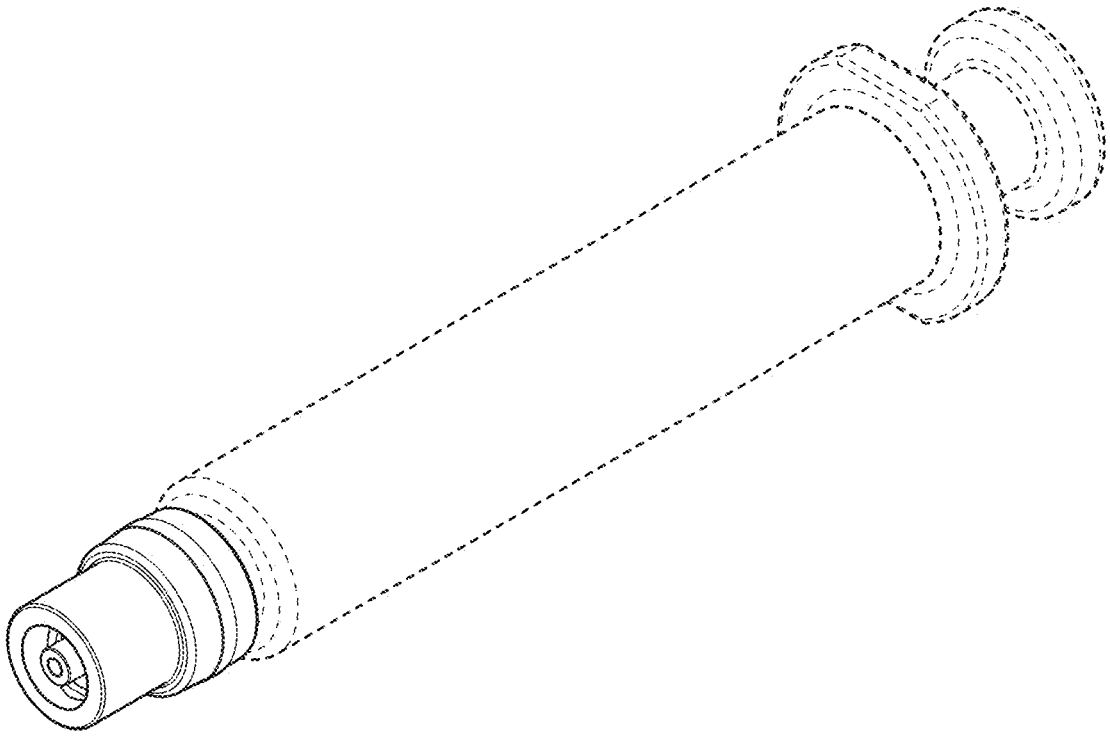
1.9