2 Sheets—Sheet 1.

L. DUNNE.

Corn-Planting and Hilling-Machine.

No. 209,670. **Patented Nov. 5, 1878.**

Fig. 1.

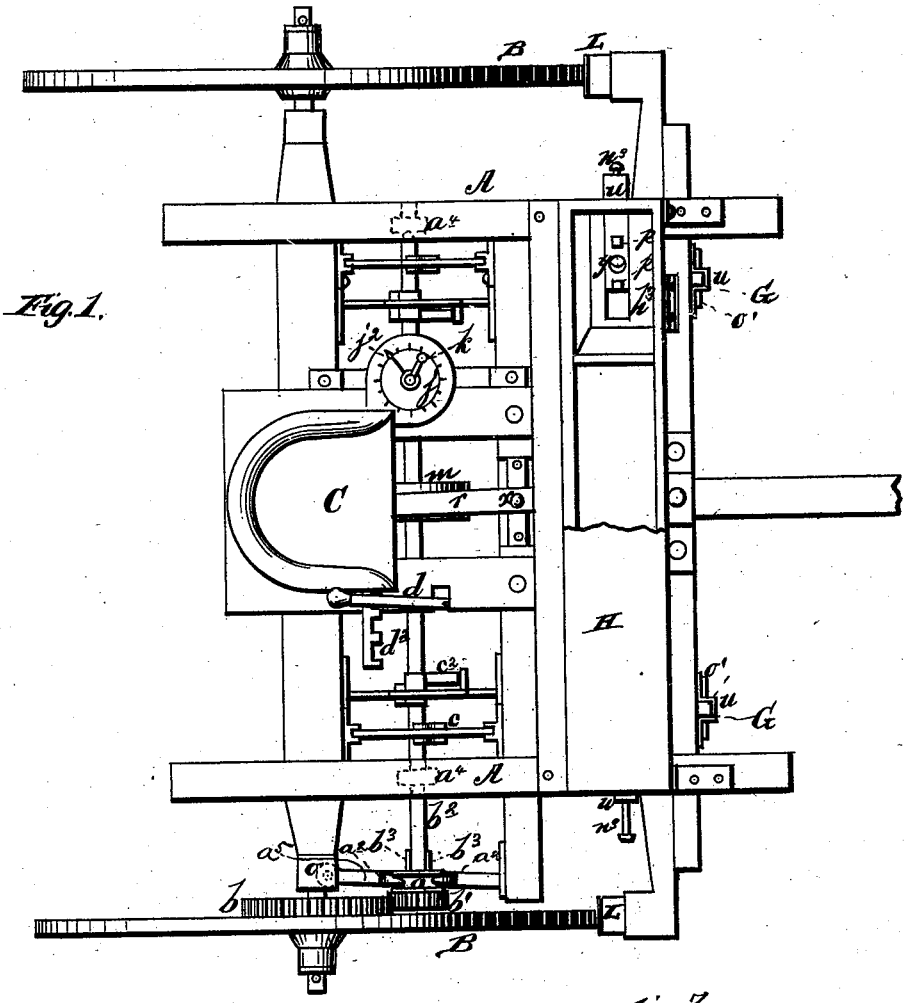

Fig. 2.

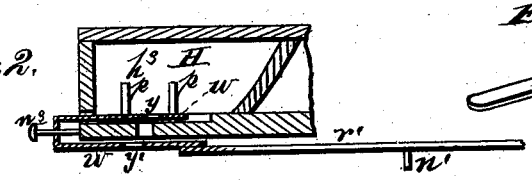

Fig. 3.

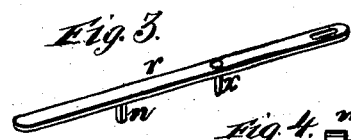

Fig. 4.

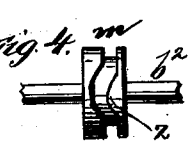

WITNESSES

Robert Everett

Jas. J. Sheehy.

INVENTOR.

Lawrence Dunne.

C. Gilmore, Smith & Co.

ATTORNEYS.

N. PETERS, PHOTO-LITHOGRAPHER, WASHINGTON, D. C.

2 Sheets—Sheet 2.

L. DUNNE.

Corn-Planting and Hilling-Machine.

No. 209,670. **Patented Nov. 5, 1878.**

Fig. 5

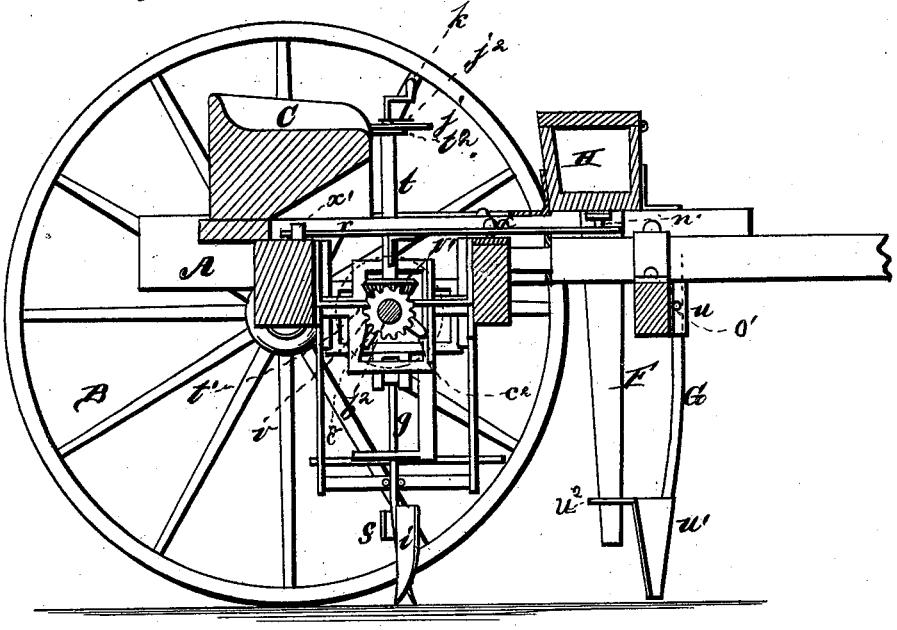

Fig. 6.

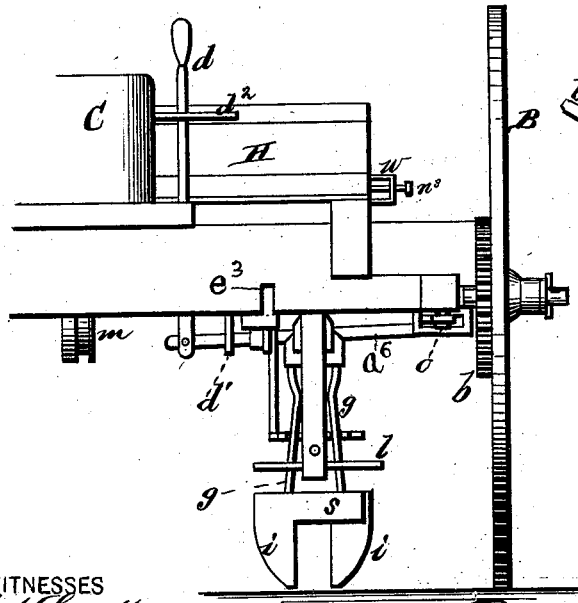

Fig. 7.

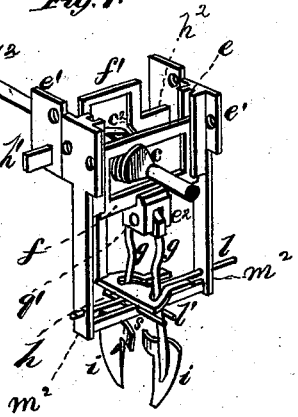

WITNESSES

Robt Everett

Jno. J. Shuhy.

INVENTOR.

Lawrence Dunne.

Gilmore, Smith & Co.

ATTORNEYS.

N. PETERS, PHOTO-LITHOGRAPHER, WASHINGTON, D. C.

UNITED STATES PATENT OFFICE.

LAWRENCE DUNNE, OF MORGANTOWN, WEST VIRGINIA.

IMPROVEMENT IN CORN PLANTING AND HILLING MACHINE.

Specification forming part of Letters Patent No. **209,670**, dated November 5, 1878; application filed July 13, 1878.

To all whom it may concern:

Be it known that I, LAWRENCE DUNNE, of Morgantown, in the county of Monongalia and State of West Virginia, have invented a new and valuable Improvement in Corn Planting and Hilling Machine; and I do hereby declare that the following is a full, clear, and exact description of the construction and operation of the same, reference being had to the annexed drawings, making a part of this specification, and to the letters and figures of reference marked thereon.

Figure 1 of the drawings is a representation of a top plan of my corn-planter and hilling-machine. Figs. 2, 3, and 4 are details of the same. Fig. 5 is a vertical sectional view. Fig. 6 is a rear detail, and Fig. 7 is a perspective detail.

This invention has relation to a combined corn planting and hilling machine; and it consists in the improvements in the construction of the same hereinafter fully described, and particularly pointed out in the claims.

Referring to the drawings, A represents the carriage-frame, supported by two wheels, B, on one of which is secured the toothed wheel b, into which the pinion b^1 gears, which pinion is mounted loosely on the shaft b^2, which is journaled at a^4 on the frame A. The pinion b^1 is kept from revolving on the shaft b^2 by means of projections b^3 on the shaft b^2 entering grooves in the pinion b^1. It is therefore constrained to move with the shaft when revolved. The pinion b^1 has a groove, a, into which studs a^2 project. To an arm, a^5, pivoted at o and carrying studs a^2, is connected the hand-lever d, through a second arm, a^6, for throwing the pinion b^1 into and out of gear with the wheel b on the wheel B.

The lever d is held in any desirable position by means of notches or pins in rack-bar d^2, secured to the driver's seat C, when the pinion b^1 is in or out of engagement with wheel b.

On the shaft b^2 are secured two quadrant cams, c, and two arms, c^2, placed side by side and extending at right angles to each other. Around the quadrant cam c are frames f in the form of a parallelogram, which slide in grooves e of the frames e^1 secured to the frame A.

To the lower side of the frames f are clamps or sockets e^2, and in these are pivoted, by bolts q', plates, in which the upper ends of the shanks q of the shovels i are secured.

The frame f^1 has arms h^1 h^2 working in slots in the frame e^1 and recesses e^3 in the under faces of the cross-beams of the frame A, said frame f^1 being operated by the arms c^2, the shaft b^2 passing through the opening in the frame f, which opening is sufficiently large to permit of the frame having a reciprocating motion. The arms h^1 move in the frames e^1, and retain the cam-plate in proper place.

To the frames f^1 are secured shanks carrying the jawed tongues h for opening and closing the shovels i. These tongues are so made that the shanks g of the shovels i are caused to move in the spaces between the jaw and tongues whenever the tongues are inserted or withdrawn from between the legs g. The guide-bar l, which moves in arms m^2, depending from the frame e^1, assists in keeping the tongues steady and in place, and its motion corresponds with that of the heart-cam c.

The hilling-shovels i are formed in two parts, with their outer edges leaning forward, that they will gather up the earth when caused to enter the ground. Each shovel has flanges s, which overlap each other when the shovels are closed. When the shovels are opened to their full extent the inner edges of the flanges are in line with each other, or but slightly overlapping.

The cam m is also placed on the shaft b^2. It has one projection in the groove on its periphery. This groove engages a pin, n, secured to rod r, which rod is pivoted at x, and caused to maintain its position by a staple, x', but free to move to right and left. At the other end is a slot for engaging the pin n' of the seed-slide-valve rod r^1, which rod connects the slide-valves w underneath or at the side of the trough H, the ends of which trough are divided off into compartments, forming the hoppers h^3. The seed-slide valves w have holes at y to allow the corn to pass through into a compartment underneath in the bottom of the hoppers h^3. The lower part of the valves also has holes at y', but removed to one side of the hole y in the upper slide. The pin n^3 guides and retains the valves in their proper places along with the valve-rod r'. The posts p, at-

tached to that portion of the seed-valves inside the hoppers and at each side of the holes *y*, are for the purpose of agitating the corn and keeping it from packing, and also to force the corn to enter the holes *y*.

On the shaft b^2 is also secured a mitered gear-wheel, *v*, engaging another wheel, *v'*, with a shaft, *t*, ascending or at right angles to the shaft b^2, and which is journaled at t^1 and t^2. At one side of the driver's seat C a graduated dial, *j*, is secured at t^2, the shaft *t* passing through the center of the dial, and which carries an index-hand, j^2, which traverses the dial whenever the shaft is revolved, and indicates the distances at which the corn is being dropped when planting.

A crank, *k*, operates the shaft *t*, by which the whole machinery may be worked by hand when thrown out of engagement with the driving-wheel B. Underneath the hoppers h^3 are secured conducting-tubes F, reaching nearly to the ground. In front of these tubes are guard-bars G, which are movable up and down in sockets *u* or other suitable devices, and secured to the frame A, which bars may be raised or lowered at will and held at any height by the pin *o'*, which passes through the socket *u* and the bars G. To the lower end of the bars G are attached angular guards u^1, for the purposes of cleaning away all obstructions and leveling the ground in front of the seed-conducting tubes F. Projecting from the guards u^1 and encircling the tubes F are plates u^2, so that when the machine is to be moved along a road, &c., by raising the bars G the guards u^1 u^2 will be raised clear of the ground.

The guide-bars l' in the frame e' guide and keep the shanks *g* of the shovels *i* in their proper places between the jawed tongue *h*, and also support or offer such resistance to the tongue when pressing against the shanks *g* that the shovels will always retain their proper places. These shovels are placed in rear and in line with the center of the open end at the bottom of the seed-conducting tubes F. These shovels may also be dismounted by withdrawing the rear guide-bars l' to release the shanks from the jawed tongue *h* and removing the pins or bolts q'.

The scrapers L are for the purpose of keeping the carriage-wheels B clear of mud.

Operation: The shovels being attached in their proper places, the guards let down to operate, the pinion b^1 thrown into engagement with the wheel *b*, and the carriage set in motion, the pinion b^1 being constrained to revolve with the shaft b^2, motion is given to all the other machinery. At each complete revolution of the shaft b^2, and which is indicated by the index-hand j^2 moving over the graduated dial *j*, the stud *n* on the vibrating rod *r* comes in line with the projection in the groove on the cam *m*, which point is also the zero of the dial *j*, and the point at which the cam is dropped by the seed-slide valves *w*. The rod *r* is moved to one side, and the valves are then moved both at the same instant. The upper holes, *y*, in the valves close off the corn in the hoppers h^3, while the lower opening, y^1, is moved opposite the compartment holding the corn already admitted from the hoppers. The support being thus withdrawn, the corn falls down through the tubes F onto the ground behind the guards u^1, and some distance in front of and in line with the shovels *i*. Immediately after the stud *n* has passed the projection in cam *m* the valves are forced back to their original places. The bottom of the compartment is then closed and the tops opened ready to receive another supply of corn. The agitators *p*, fitted to the valves inside the hoppers, are at opposite sides of the openings *y*, for the purpose of agitating the corn to keep it from packing, and also to force the corn into the compartment underneath, which is of sufficient size to hold the number of grains of corn to be planted in each hill.

The shovels *i* for hilling the corn are placed at such distance in line and in rear of the center of the seed-conducting-tubes F that, when they are in the ground to their greatest depth and opened to their fullest extent by the tongue *h*, they will be in line with the corn just dropped and straddling the hill. The downward and upward motions of the shovels are regulated by the quadrant cams *c* acting on the frames *f*, the shanks *g* of the shovels being connected to the frames, and held in proper position by the guide-bars l' and bolts q^1. In completing a revolution the quadrant cams *c*, during one-fourth of their revolution, will be ascending, raising the shovels *i* to their highest point. During the next fourth the shovels will remain at this height. During the third they will descend till they have reached their lowest point, and during the last fourth part of their revolution the shovels will remain at their lowest point, when they will again begin to ascend. The moment that the front edge of the quadrant cam *c* has reached its lowest point the shovels are also at their lowest points in the ground. The arms c^2 at this same instant begin to press against the outer side of the frame f^1, and the jawed tongue *h* begins to enter between the shanks *g* of the shovels *i*, and continues to force them apart till half the hill is made. The quadrant cams *c* and arms c^2 then will have moved but the one-eighth of a circle. The moment half the hill is made one of the arms c^2 is at, and begins leaving, a projection on the inner face of the frame f^1. The frames f^1, having been moved out to their limits in one direction, are now acted upon and being drawn in the opposite direction, and at the same time the jawed tongues *h* are being withdrawn and closing the shovels.

The moment the shovels are completely closed the hill is completed, and the quadrant cams *c* have completed a fourth of a revolution, and begin ascending, carrying up the shovels with them which were opened and closed in the ground during the formation of the hill. The tongue *h* is therefore inserted

and withdrawn from between the shanks of the shovels during one-fourth of a revolution of the quadrant cams *c*. The shovels in their descent strike the ground a little in front of where the hill is to be formed. They continue descending until they have reached their lowest point in the ground, when they begin to open. They have therefore collected some earth in front of them. As they open and advance they collect more, which also piles up. By the time they have reached the distance of half the hill the shovels are open to their fullest extent. The flanges *s* on the shovels are so regulated that when the points of the shovels are at their lowest point in the ground the lower edges of the flanges should be a certain distance above the surface of the ground, this distance being regulated by the quantity of earth required to cover the corn, whether two or three inches. A portion of the earth collected by the shovels will evidently pass out under the flanges, and, covering the corn, the remainder will be carried forward or thrown to one side of the hill. At the same time the tops of the hills are smoothed off by the flanges, always leaving a regulated depth of soil over the corn.

The wheels B of the carriage are placed at such distance apart that either will reach halfway between the next row to be planted. In hills at four feet apart the wheel will reach to half that distance beyond a row.

The track made by the wheel when planting serves as a guide in planting the next two rows, the same wheel returning in its own track. In this manner the hills are preserved in line in one direction.

When the machine is found to be losing or gaining ground, so that the corn is not dropping in a straight line with the hills already planted, the carriage is stopped, the pinion b^1 thrown out of engagement with the wheel *b* by means of the lever *d* operated by the driver, and by turning the crank *k* on shaft *t* with the hand, either backward or forward, as the case requires. The whole machinery may be adjusted, the dial serving as a guide for the number of inches that it is found the corn is being dropped under or over, setting the index-hand j^2 either back or forward the particular amount. When so set, the pinion is again thrown into engagement with the driving-wheel, and the carriage moves forward. In this way the hills of corn may be preserved in line in a direction at right angles to the first line, thereby preserving the checkering of the field.

The corn will not drop from the valves until the machinery has completed the number of inches that it has been set back or forward. Every part maintains its relative position, no matter what may be the amount of adjustment made, neither can they be disarranged by the backing of the carriage. Everything will work, and there will be no danger of any resistance being offered that might break or disarrange the machinery.

The index-hand j^2 will always point to the zero-mark on the dial *j* at the instant that the corn is to be dropped from the valves.

The frame A is covered by a platform, which assists in protecting the machinery from rain, &c., and also prevents any accident to the driver which might occur by slipping when the machine is in motion, if exposed.

What I claim as new, and desire to secure by Letters Patent, is—

1. The shaft b^2 and quadrant cam *c*, in combination with shanks *g* and shovels *i s*, as and for the purpose specified.

2. The frames $f f^1$, working in the frame e^1, the latter provided with arms h^1 h^2, in combination with the shaft b^2, having cams *c* and arms c^2, and the shanks *g* and shovels *i s*, substantially as and for the purposes set forth.

3. The shovels *i*, constructed as shown, with shanks *g*, pivoted at e^2 in reciprocating frame, combined with jawed tongue *h* and operating mechanism, substantially as specified.

4. The frame e^1, having groove *e*, in combination with the reciprocating frame *f*, cam *c*, frame *f'*, and shaft b^2, as and for the purposes set forth.

5. The shaft b^2, operating the feed-slides *y* *y'* in the hoppers h^3, in combination with the feed-tubes F, shovels *i s*, and indicators j^1 j^2, constructed and operating substantially as and for the purposes set forth.

6. The combination of the jawed tongue *h*, having guide-bars *l*, with the shovels *g i*, operated by the cams *c* and arms c^2 upon the shaft b^2, and frames $f f^2$, substantially as and for the purposes set forth.

In testimony that I claim the above I have hereunto subscribed my name in the presence of two witnesses.

LAWRENCE DUNNE.

Witnesses:

THORNTON PICKENPAUGH,

ADAM L. NYE.